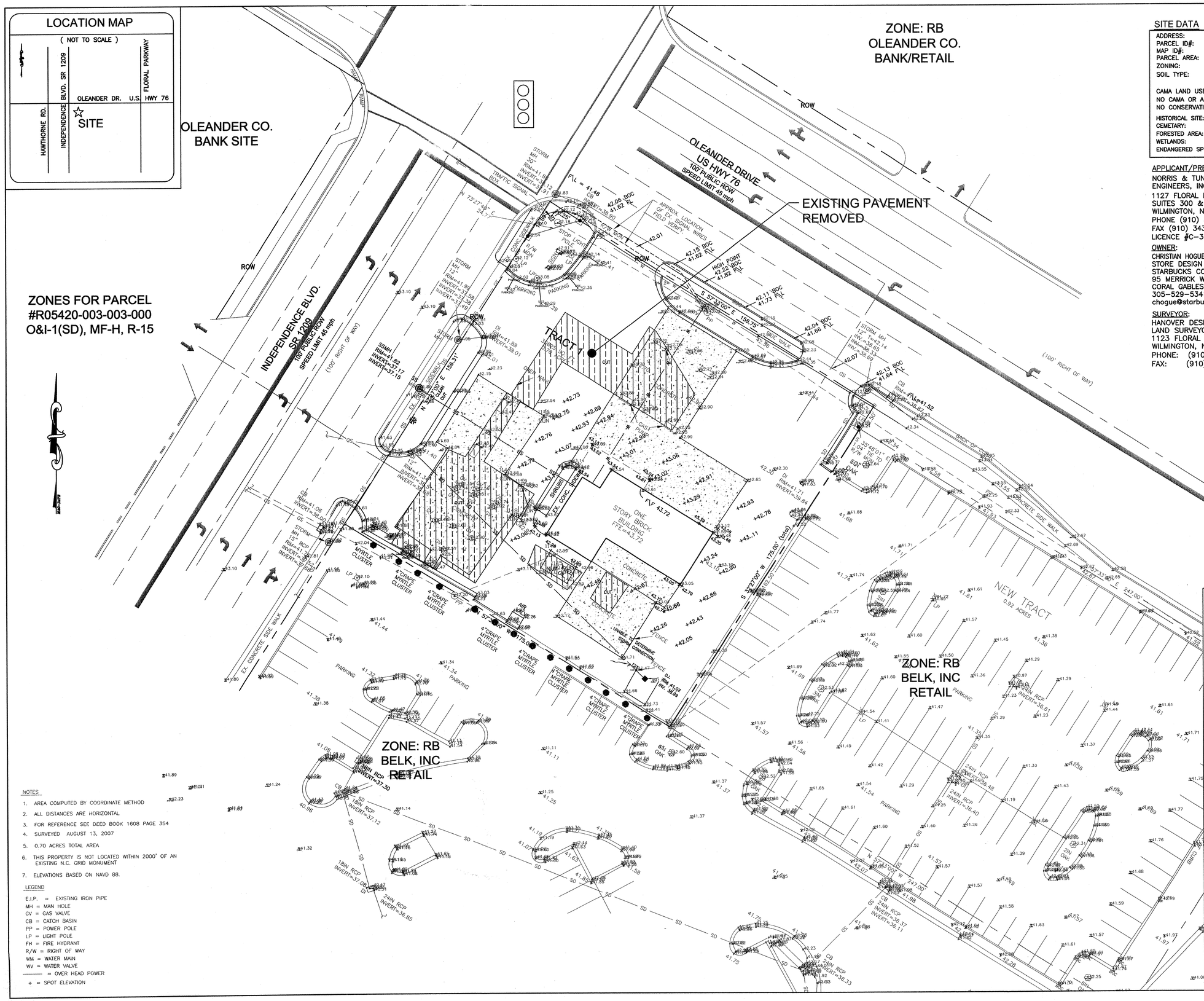

NOTES

1. AREA COMPUTED BY COORDINATE METHOD
2. ALL DISTANCES ARE HORIZONTAL
3. FOR REFERENCE SEE DEED BOOK 1608 PAGE 354
4. SURVEYED AUGUST 13, 2007
5. 0.70 ACRES TOTAL AREA
6. THIS PROPERTY IS NOT LOCATED WITHIN 2000' OF AN EXISTING N.C. GRID MONUMENT
7. ELEVATIONS BASED ON NAVD 88.

LEGEND

E.I.P. = EXISTING IRON PIPE
MH = MAN HOLE
GV = GAS VALVE
CB = CATCH BASIN
PP = POWER POLE
LP = LIGHT POLE
FH = FIRE HYDRANT
R/W = RIGHT OF WAY
WM = WATER MAIN
WV = WATER VALVE
——— = OVER HEAD POWER
+ = SPOT ELEVATION

SITE DATA

ADDRESS:	3502 OLEANDER DRIVE
PARCEL ID#:	R05517-008-008-000
MAP ID#:	313717.01.4745.000
PARCEL AREA:	0.70 AC
ZONING:	RB
SOIL TYPE:	Le: LEON SAND Mu: MURVILLE FINE SAND
CAMA LAND USE:	URBAN
NO CAMA OR AEC SETBACKS	
NO CONSERVATION RESOURCES OR SETBACKS	
HISTORICAL SITE:	NONE
CEMETARY:	NONE
FORESTED AREA:	NONE
WETLANDS:	NONE WITHIN SITE AREA
ENDANGERED SPECIES/HABITAT:	NONE REPORTED

APPLICANT/PREPARER OF PLAN:
NORRIS & TUNSTALL CONSULTING ENGINEERS, INC.
1127 FLORAL PARKWAY
SUITES 300 & 400
WILMINGTON, NC, 28403
PHONE (910) 343-9653
FAX (910) 343-9604
LICENCE #C-3641

OWNER:
CHRISTIAN HOGUE, DESIGN MANAGER
STORE DESIGN SOUTHEAST
STARBUCKS COFFEE COMPANY
95 MERRICK WAY, SUITE 650
CORAL GABLES, FL 33134
305-529-5341
chogue@starbucks.com

SURVEYOR:
HANOVER DESIGN SERVICES, P.A.
LAND SURVEYORS, ENGINEERS, LAND PLANNERS
1123 FLORAL PARKWAY
WILMINGTON, N.C. 28403
PHONE: (910) 343-8002
FAX: (910) 343-9941

SYMBOL	DATE	DESCRIPTION	BY

REVISIONS

© 2012 NORRIS & TUNSTALL

INVENTORY SITE PLAN
STARBUCKS - STORE #18295
3502 OLEANDER DR.
WILMINGTON, N. C.

OWNER/DEVELOPER
MR. NELSON MACRAE, PRESIDENT
THE OLEANDER COMPANY, INC.
P.O. BOX 3145
WILMINGTON, NC. 28406
910 392-3300
910 392-5123

NORRIS & TUNSTALL
CONSULTING ENGINEERS, INC.
1127 FLORAL PARKWAY PHONE (910) 343-9653
SUITES 300 & 400 FAX (910) 343-9604
WILMINGTON, NC 28403 off.ce@jnkteng.com
licence #C-3641

For each open utility cut of City streets, a $325 permit shall be required from the City prior to occupancy and/or project acceptance.

Approved Construction Plan

	Name	Date
Planning	Dawson Bradley	11/29/12
Public Utilities	N/A	
Traffic	Tom Murphy	11/29/12
Fire	[illegible]	11/29/2012

CITY OF WILMINGTON NORTH CAROLINA
Public Services • Engineering Division
APPROVED DRAINAGE PLAN
Date: 11/29/12 Permit # 2012 033
Signed: [illegible]

NCDENR PWSS WATER PERMIT #:	
WATER CAPACITY:	GPD
DWQ SEWER PERMIT #:	
SEWER CAPACITY:	GPD
SEWER SHED # AND PLANT:	
SEWER TO FLOW THROUGH NEI:	YES or NO (CIRCLE ONE)

SCALE: 1" = 20'
0 20 40 60

12040

DES.	JST
CKD.	JPN
DRWN.	NKS
DATE	10/30/12

NORTH CAROLINA PROFESSIONAL SEAL 19851 ENGINEER JOHN S. TUNSTALL

I1

CP 1304

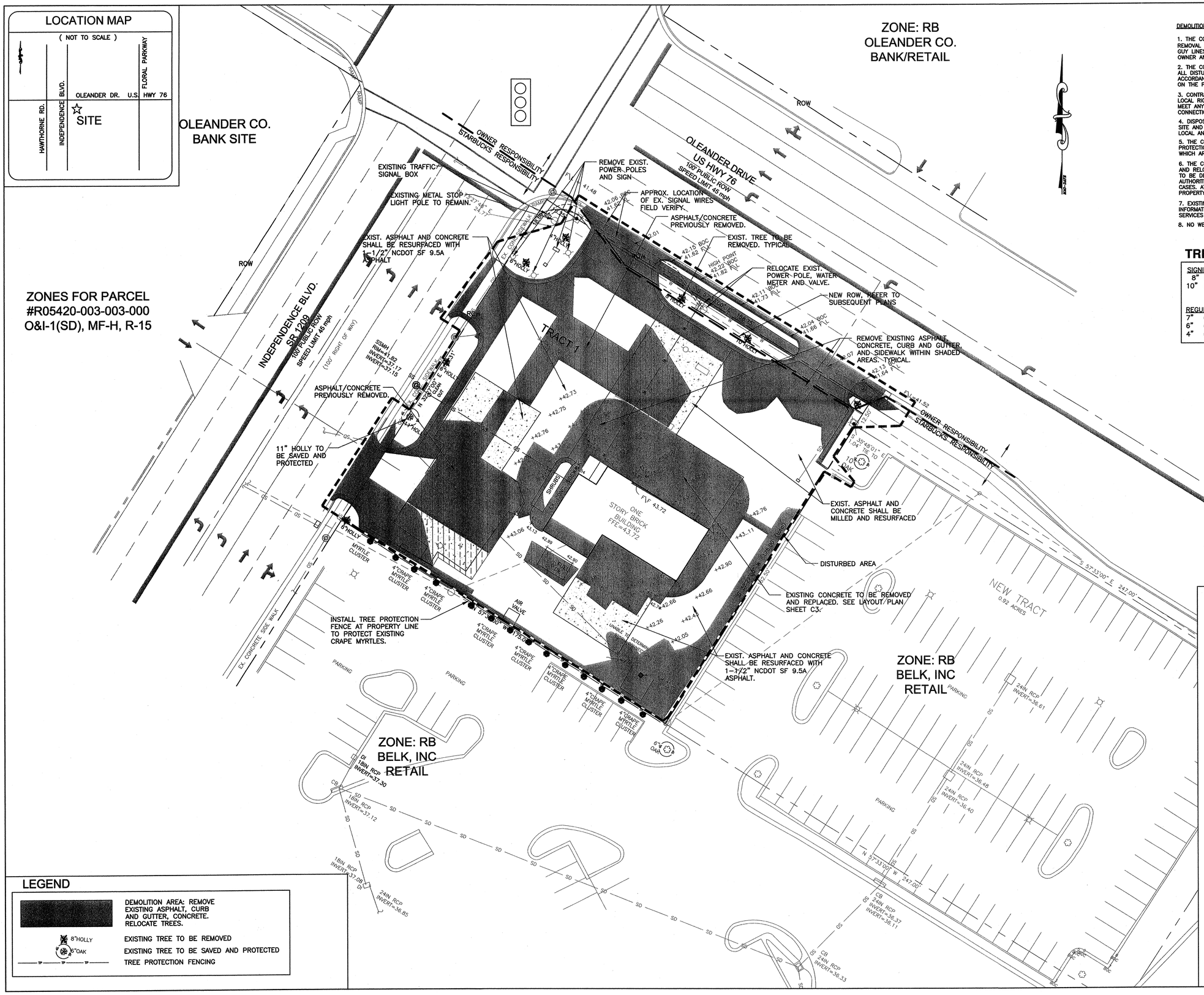

LEGEND

	DEMOLITION AREA: REMOVE EXISTING ASPHALT, CURB AND GUTTER, CONCRETE. RELOCATE TREES.
8"HOLLY	EXISTING TREE TO BE REMOVED
6"OAK	EXISTING TREE TO BE SAVED AND PROTECTED
	TREE PROTECTION FENCING

DEMOLITION NOTES:

1. THE CONTRACTOR IS RESPONSIBLE FOR COORDINATING THE REMOVAL OR RELOCATION OF ANY EXISTING UTILITY POLES / GUY LINES, LIGHT POLES, TELEPHONE PEDESTALS WITH THE OWNER AND THE APPLICABLE UTILITY COMPANY AS REQUIRED.

2. THE CONTRACTOR IS RESPONSIBLE FOR STABILIZATION OF ALL DISTURBED AREAS AND SLOPES ON AND OFF SITE IN ACCORDANCE WITH THE EROSION CONTROL MEASURES SPECIFIED ON THE PLANS AND IN THE SPECIFICATIONS.

3. CONTRACTOR SHALL COORDINATE WORK WITHIN NCDOT AND LOCAL RIGHT OF WAYS WITH PROPER AUTHORITIES AND SHALL MEET ANY REQUIREMENTS AS TO TRAFFIC CONTROL AND CONNECTION TO EXISTING STREETS.

4. DISPOSAL: DEMOLISHED MATERIALS SHALL BE REMOVED FROM SITE AND DISPOSED OF IN ACCORDANCE WITH ALL APPLICABLE LOCAL AND STATE CODES.

5. THE CONTRACTOR IS RESPONSIBLE FOR THE LOCATION AND PROTECTION OF EXISTING UTILITIES DURING CONSTRUCTION WHICH ARE TO REMAIN IN SERVICE.

6. THE CONTRACTOR IS RESPONSIBLE FOR THE COORDINATION AND RELOCATION OR DISCONNECTION OF ALL EXISTING UTILITIES TO BE DEMOLISHED WITH APPLICABLE AGENCIES AND AUTHORITIES. AGENCY PROCEDURES SHALL BE FOLLOWED IN ALL CASES. AT A MINIMUM UTILITIES SHALL BE CAPPED AT THE PROPERTY LINE.

7. EXISTING BOUNDARY, TOPOGRAPHIC AND TREE SURVEY INFORMATION FROM SURVEY BY HANOVER DESIGN SERVICES AND PROVIDED BY THE OWNER.

8. NO WETLANDS EXIST WITHIN THE SITE AREA.

TREE REMOVAL TABLE

SIGNIFICANT HOLLIES	
8"	(1)
10"	(1)
REGULATED HOLLIES	
7"	(1)
6"	(3)
4"	(1)

For each open utility cut of City streets, a $325 permit shall be required from the City prior to occupancy and/or project acceptance.

Approved Construction Plan

	Name	Date
Planning	Dawn M. Griffin	11/29/12
Public Utilities	N/A	
Traffic	Tayo E. Murphy	11.29.12
Fire	[illegible]	11/29/2012

CITY OF WILMINGTON NORTH CAROLINA
Public Services • Engineering Division
APPROVED DRAINAGE PLAN
Date: 11/29/12 Permit # 2012033
Signed: [illegible]

NCDENR PWSS WATER PERMIT #:	
WATER CAPACITY:	GPD
DWQ SEWER PERMIT #:	
SEWER CAPACITY:	GPD
SEWER SHED # AND PLANT:	
SEWER TO FLOW THROUGH NEI:	YES or NO (CIRCLE ONE)

SCALE: 1" = 20'
0 20 40 60

SYMBOL	DATE	DESCRIPTION	BY
		REVISIONS	

© 2012 NORRIS & TUNSTALL

DEMOLITION AND TREE PLAN

STARBUCKS - STORE #18295
3502 OLEANDER DR.
WILMINGTON, N. C.

OWNER/DEVELOPER
MR. NELSON MACRAE, PRESIDENT
THE OLEANDER COMPANY, INC.
P.O. BOX 3145
WILMINGTON, NC. 28406
910 392-3300
910 392-5123

NORRIS & TUNSTALL
CONSULTING ENGINEERS, INC.
1127 FLORAL PARKWAY
SUITES 300 & 400
WILMINGTON, NC 28403
PHONE (910) 343-9653
FAX (910) 343-9604
E-MAIL nt@norrisandtunstall.com
licence #C-3641

12040

DES.	JST
CKD.	JPN
DRWN.	NKS
DATE	10/31/12

NORTH CAROLINA PROFESSIONAL SEAL 19851 ENGINEER JOHN P. NORRIS III

C1

CP 1304

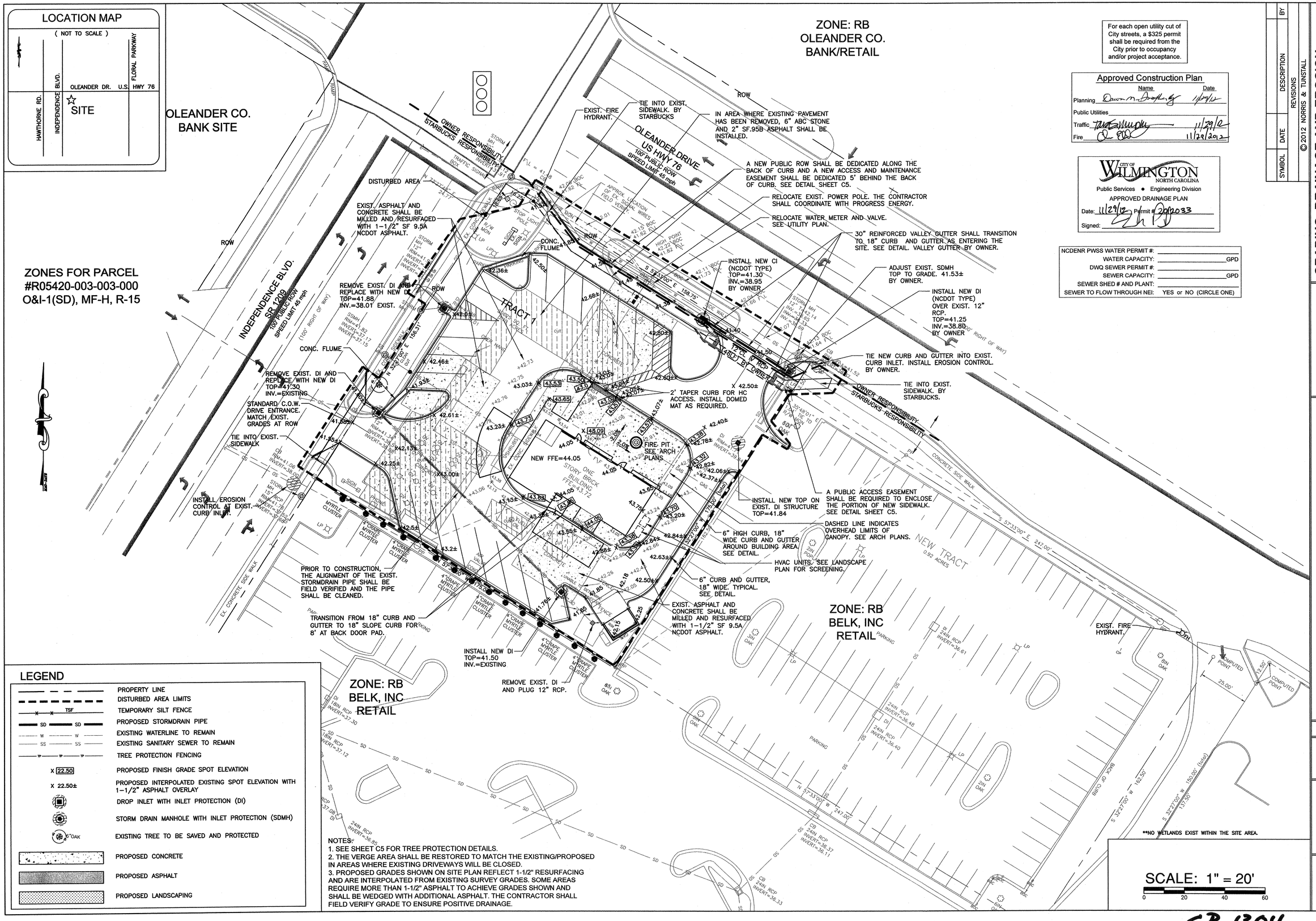

For each open utility cut of City streets, a $325 permit shall be required from the City prior to occupancy and/or project acceptance.

Approved Construction Plan

	Name	Date
Planning	Dawn M. Bradley	11/29/12
Public Utilities		
Traffic	Tom Sullivan	11/29/12
Fire		11/29/2012

CITY OF WILMINGTON NORTH CAROLINA
Public Services • Engineering Division
APPROVED DRAINAGE PLAN
Date: 11/29/12 Permit # 2012033
Signed:

NCDENR PWSS WATER PERMIT #:	
WATER CAPACITY:	GPD
DWQ SEWER PERMIT #:	
SEWER CAPACITY:	GPD
SEWER SHED # AND PLANT:	
SEWER TO FLOW THROUGH NEI:	YES or NO (CIRCLE ONE)

LEGEND

- PROPERTY LINE
- DISTURBED AREA LIMITS
- TSF — TEMPORARY SILT FENCE
- SD — PROPOSED STORMDRAIN PIPE
- W — EXISTING WATERLINE TO REMAIN
- SS — EXISTING SANITARY SEWER TO REMAIN
- TP — TREE PROTECTION FENCING
- X 22.50 — PROPOSED FINISH GRADE SPOT ELEVATION
- X 22.50± — PROPOSED INTERPOLATED EXISTING SPOT ELEVATION WITH 1-1/2" ASPHALT OVERLAY
- DROP INLET WITH INLET PROTECTION (DI)
- STORM DRAIN MANHOLE WITH INLET PROTECTION (SDMH)
- 6"OAK — EXISTING TREE TO BE SAVED AND PROTECTED
- PROPOSED CONCRETE
- PROPOSED ASPHALT
- PROPOSED LANDSCAPING

NOTES:
1. SEE SHEET C5 FOR TREE PROTECTION DETAILS.
2. THE VERGE AREA SHALL BE RESTORED TO MATCH THE EXISTING/PROPOSED IN AREAS WHERE EXISTING DRIVEWAYS WILL BE CLOSED.
3. PROPOSED GRADES SHOWN ON SITE PLAN REFLECT 1-1/2" RESURFACING AND ARE INTERPOLATED FROM EXISTING SURVEY GRADES. SOME AREAS REQUIRE MORE THAN 1-1/2" ASPHALT TO ACHIEVE GRADES SHOWN AND SHALL BE WEDGED WITH ADDITIONAL ASPHALT. THE CONTRACTOR SHALL FIELD VERIFY GRADE TO ENSURE POSITIVE DRAINAGE.

SYMBOL	DATE	DESCRIPTION	BY
		REVISIONS	

©2012 NORRIS & TUNSTALL

GRADING, DRAINAGE AND EROSION CONTROL PLAN
STARBUCKS - STORE #18295
3502 OLEANDER DR.
WILMINGTON, N. C.

OWNER/DEVELOPER
MR. NELSON MACRAE, PRESIDENT
THE OLEANDER COMPANY, INC.
P.O. BOX 3145
WILMINGTON, NC. 28406
910 392-3300
910 392-5123

NORRIS & TUNSTALL
CONSULTING ENGINEERS, INC.
1127 FLORAL PARKWAY
SUITES 300 & 400
WILMINGTON, NC 28403
PHONE (910) 343-9653
FAX (910) 343-9604
office@nt-eng.com
licence #C-3641

12040

DES.	JST
CKD.	JPN
DRWN.	NKS
DATE	11/20/12

NORTH CAROLINA PROFESSIONAL SEAL 19851 ENGINEER JOHN S. TUNSTALL

C2

CP 1304

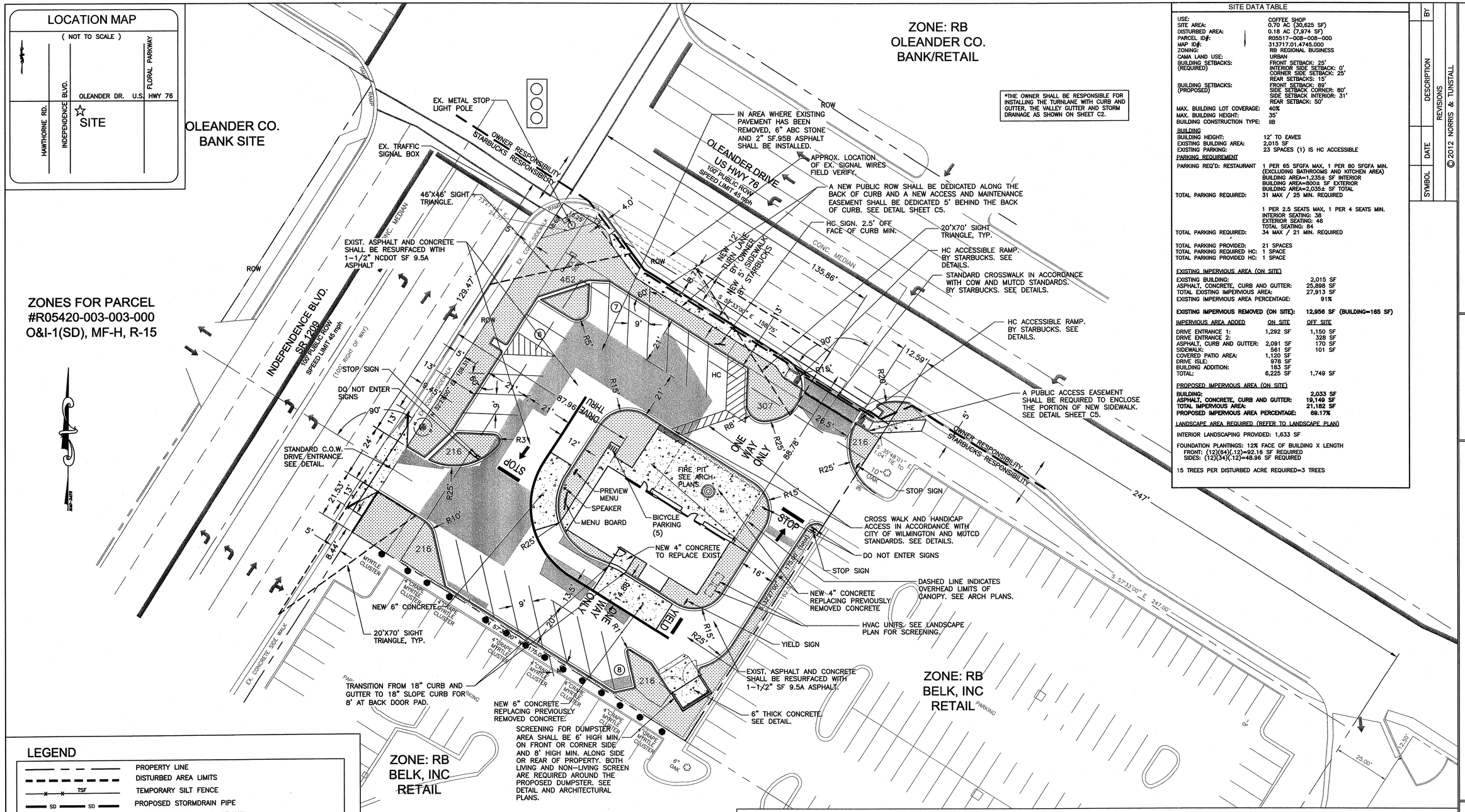

SITE DATA TABLE

USE:	COFFEE SHOP
SITE AREA:	0.70 AC (30,625 SF)
DISTURBED AREA:	0.18 AC (7,974 SF)
PARCEL ID#:	R05517-008-008-000
MAP ID#:	313717.01.4745.000
ZONING:	RB REGIONAL BUSINESS
CAMA LAND USE:	URBAN
BUILDING SETBACKS: (REQUIRED)	FRONT SETBACK: 25' INTERIOR SIDE SETBACK: 0' CORNER SIDE SETBACK: 25' REAR SETBACKS: 15'
BUILDING SETBACKS: (PROPOSED)	FRONT SETBACK: 89' SIDE SETBACK CORNER: 80' SIDE SETBACK INTERIOR: 31' REAR SETBACK: 50'
MAX. BUILDING LOT COVERAGE:	40%
MAX. BUILDING HEIGHT:	35'
BUILDING CONSTRUCTION TYPE:	IIB

BUILDING

BUILDING HEIGHT:	12' TO EAVES
EXISTING BUILDING AREA:	2,015 SF
EXISTING PARKING:	23 SPACES (1) IS HC ACCESSIBLE

PARKING REQUIREMENT

PARKING REQ'D: RESTAURANT	1 PER 65 SFGFA MAX, 1 PER 80 SFGFA MIN. (EXCLUDING BATHROOMS AND KITCHEN AREA) BUILDING AREA=1,235± SF INTERIOR BUILDING AREA=800± SF EXTERIOR BUILDING AREA=2,035± SF TOTAL
TOTAL PARKING REQUIRED:	31 MAX / 25 MIN. REQUIRED
	1 PER 2.5 SEATS MAX, 1 PER 4 SEATS MIN. INTERIOR SEATING: 38 EXTERIOR SEATING: 46 TOTAL SEATING: 84
TOTAL PARKING REQUIRED:	34 MAX / 21 MIN. REQUIRED
TOTAL PARKING PROVIDED:	21 SPACES
TOTAL PARKING REQUIRED HC:	1 SPACE
TOTAL PARKING PROVIDED HC:	1 SPACE

EXISTING IMPERVIOUS AREA (ON SITE)

EXISTING BUILDING:	2,015 SF
ASPHALT, CONCRETE, CURB AND GUTTER:	25,898 SF
TOTAL EXISTING IMPERVIOUS AREA:	27,913 SF
EXISTING IMPERVIOUS AREA PERCENTAGE:	91%

EXISTING IMPERVIOUS REMOVED (ON SITE): 12,956 SF (BUILDING=165 SF)

IMPERVIOUS AREA ADDED	ON SITE	OFF SITE
DRIVE ENTRANCE 1:	1,292 SF	1,150 SF
DRIVE ENTRANCE 2:		328 SF
ASPHALT, CURB AND GUTTER:	2,091 SF	170 SF
SIDEWALK:	561 SF	101 SF
COVERED PATIO AREA:	1,120 SF	
DRIVE ISLE:	978 SF	
BUILDING ADDITION:	183 SF	
TOTAL:	6,225 SF	1,749 SF

PROPOSED IMPERVIOUS AREA (ON SITE)

BUILDING:	**2,033 SF**
ASPHALT, CONCRETE, CURB AND GUTTER:	**19,149 SF**
TOTAL IMPERVIOUS AREA:	**21,182 SF**
PROPOSED IMPERVIOUS AREA PERCENTAGE:	**69.17%**

LANDSCAPE AREA REQUIRED (REFER TO LANDSCAPE PLAN)

INTERIOR LANDSCAPING PROVIDED: 1,633 SF

FOUNDATION PLANTINGS: 12% FACE OF BUILDING X LENGTH
FRONT: (12)(64)(.12)=92.16 SF REQUIRED
SIDES: (12)(34)(.12)=48.96 SF REQUIRED

15 TREES PER DISTURBED ACRE REQUIRED=3 TREES

LEGEND

	PROPERTY LINE
	DISTURBED AREA LIMITS
TSF	TEMPORARY SILT FENCE
SD	PROPOSED STORMDRAIN PIPE
W	EXISTING WATERLINE TO REMAIN
SS	EXISTING SANITARY SEWER TO REMAIN
TP	TREE PROTECTION FENCING
X 22.50	PROPOSED FINISH GRADE SPOT ELEVATION
X 22.50±	PROPOSED INTERPOLATED EXISTING SPOT ELEVATION WITH 1-1/2" ASPHALT OVERLAY
	DROP INLET WITH INLET PROTECTION (DI)
	STORM DRAIN MANHOLE WITH INLET PROTECTION (SDMH)
8"OAK	EXISTING TREE TO BE SAVED AND PROTECTED
	PROPOSED CONCRETE
	PROPOSED ASPHALT
	PROPOSED LANDSCAPING

NOTES:
1. TACTILE WARNING MATS ARE TO BE INSTALLED ON ALL WHEELCHAIR RAMPS.
2. A LANDSCAPE PLAN INDICATING THE LOCATION OF REQUIRED STREET TREES SHALL BE SUBMITTED TO THE CITY OF WILMINGTON TRAFFIC ENGINEERING DIVISION AND PARKS AND RECREATION DEPARTMENT FOR REVIEW AND APPROVAL PRIOR TO THE RECORDING OF THE FINAL PLAT.
3. ALL PAVEMENT MARKING ARROWS SHALL BE THERMOPLASTIC.
4. THE VERGE AREA SHALL BE RESTORED TO MATCH THE EXISTING/PROPOSED IN AREAS WHERE EXISTING DRIVEWAYS WILL BE CLOSED.
5. ALL PROPOSED VEGETATION WITHIN ALL THE SIGHT TRIANGLES SHALL NOT INTERFERE WITH VISUAL SIGHT LINES FROM 30" - 10'.

For each open utility cut of City streets, a $325 permit shall be required from the City prior to occupancy and/or project acceptance.

Approved Construction Plan

	Name	Date
Planning	Dawn M Stickley	11/29/12
Public Utilities	N/A	
Traffic	Thomas Murphy	11/29/12
Fire	[illegible]	11/29/2012

CITY OF WILMINGTON NORTH CAROLINA
Public Services • Engineering Division
APPROVED DRAINAGE PLAN
Date: 11/29/12 Permit #: 20120033
Signed: [illegible]

NCDENR PWSS WATER PERMIT #:	
WATER CAPACITY:	GPD
DWQ SEWER PERMIT #:	
SEWER CAPACITY:	GPD
SEWER SHED # AND PLANT:	
SEWER TO FLOW THROUGH NEI:	YES or NO (CIRCLE ONE)

SCALE: 1" = 20'
0 20 40 60

SYMBOL	DATE	DESCRIPTION	BY
		REVISIONS	

© 2012 NORRIS & TUNSTALL

LAYOUT PLAN
STARBUCKS - STORE #18295
3502 OLEANDER DR.
WILMINGTON, N. C.

OWNER/DEVELOPER
MR. NELSON MACRAE, PRESIDENT
THE OLEANDER COMPANY, INC.
P.O. BOX 3145
WILMINGTON, NC. 28406
910 392-3300
910 392-5123

NORRIS & TUNSTALL
CONSULTING ENGINEERS, INC.
1127 FLORAL PARKWAY
SUITES 300 & 400
WILMINGTON, NC 28403
PHONE (910) 343-9653
FAX (910) 343-9604
office@nkteng.com
licence #C-3641

12040

DES. JST
CKD. JPN
DRWN. NKS
DATE 11/26/12

NORTH CAROLINA PROFESSIONAL SEAL 19851 ENGINEER JOHN S. TUNSTALL

C3

CP 1304

LOCATION MAP

(NOT TO SCALE)

HAWTHORNE RD. | INDEPENDENCE BLVD. | OLEANDER DR. | U.S. HWY 76 | FLORAL PARKWAY

☆ SITE

OLEANDER CO.
BANK SITE

ZONES FOR PARCEL
#R05420-003-003-000
O&I-1(SD), MF-H, R-15

ZONE: RB
OLEANDER CO.
BANK/RETAIL

ZONE: RB
BELK, INC
RETAIL

OLEANDER DRIVE
US HWY 76
100' PUBLIC ROW
SPEED LIMIT 45 mph

INDEPENDENCE BLVD.
SR 1209
100' PUBLIC ROW
SPEED LIMIT 45 mph
(100' RIGHT OF WAY)

OWNER RESPONSIBILITY
STARBUCKS RESPONSIBILITY

EXIST. FIRE HYDRANT.

EXISTING TRAFFIC SIGNAL BOX.

EXISTING STOP LIGHT POLE

APPROX. LOCATION OF EX. SIGNAL WIRES FIELD VERIFY.

A NEW PUBLIC ROW SHALL BE DEDICATED ALONG THE BACK OF CURB AND A NEW ACCESS AND MAINTENANCE EASEMENT SHALL BE DEDICATED 5' BEHIND THE BACK OF CURB. SEE DETAIL SHEET C5.

NEW 1" WATER METER AND NEW 1" RPZ BFP, (IN A CFPUA APPROVED ABOVE GROUND ENCLOSURE), INSTALLED ON EXISTING WATER LINE. FIELD VERIFY THAT EXISTING WATER SERVICE LINE IS COPPER. IF NOT, WATER SERVICE LINE MUST BE ABANDONED AND A NEW WATER SERVICE LINE INSTALLED. WATER METER AND BFP SHALL BE CONTAINED WITHIN A 5' MIN. UTILITY EASEMENT.

APPROXIMATE LOCATION OF EXIST. WATERMAIN.

INSTALL NEW SAMPLING CHAMBER ON EXISTING SERVICE LINE.

APPROXIMATE LOCATION OF EXIST. 4" SEWER SERVICE LINE.

EXIST. SANITARY SEWER CLEAN OUT.

APPROXIMATE LOCATION OF EXIST. WATER SERVICE LINE.

FIRE PIT SEE ARCH PLANS

GREASE TRAP. REFER TO PLUMBING PLANS.

ONE STORY BRICK BUILDING FFE=43.72

A PUBLIC ACCESS EASEMENT SHALL BE REQUIRED TO ENCLOSE THE PORTION OF NEW SIDEWALK. SEE DETAIL SHEET C5.

DASHED LINE INDICATES OVERHEAD LIMITS OF CANOPY. SEE ARCH PLANS.

HVAC UNITS, SEE LANDSCAPE PLAN FOR SCREENING.

3/4" PROPANE LINE REFER TO PLUMBING PLANS.

PROPOSED PROPANE TANK. REFER TO PLUMBING PLANS.

S 57°33'00" E 158.75'

S 57°33'00" E 242.00'

N 32°27'00" E 156.31'

N 57°33'00" W 175.00'

N 32°27'00" W 175.00' (total)

35°48'01" E 1.03' TIE TO 10" OAK

MYRTLE CLUSTER

4" CRAPE MYRTLE CLUSTER

EX. CONCRETE SIDE WALK

PARKING

24IN RCP INVERT=36.61

24IN RCP INVERT=36.48

25.00'

12.50'

LEGEND

	PROPERTY LINE
	DISTURBED AREA LIMITS
X X TSF	TEMPORARY SILT FENCE
SD SD	PROPOSED STORMDRAIN PIPE
W W	EXISTING WATERLINE TO REMAIN
SS SS	EXISTING SANITARY SEWER TO REMAIN
TP TP TP	TREE PROTECTION FENCING
X 22.50	PROPOSED FINISH GRADE SPOT ELEVATION
X 22.50±	PROPOSED INTERPOLATED EXISTING SPOT ELEVATION WITH 1-1/2" ASPHALT OVERLAY
	DROP INLET WITH INLET PROTECTION (DI)
	STORM DRAIN MANHOLE WITH INLET PROTECTION (SDMH)
6"OAK	EXISTING TREE TO BE SAVED AND PROTECTED
	PROPOSED CONCRETE
	PROPOSED ASPHALT
	PROPOSED LANDSCAPING

UTILITY NOTES FOR FIRE HYDRANTS

1. FIRE HYDRANTS MUST BE WITHIN 150' OF THE FIRE DEPARTMENT CONNECTION.

2. THE FIRE DEPARTMENT CONNECTION MUST BE WITHIN 40' OF FIRE APPARATUS PLACEMENT.

3. LANDSCAPING CANNOT BLOCK OR IMPEDE THE FIRE DEPARTMENT CONNECTIONS OR FIRE HYDRANTS. A 3' CLEAR SPACE SHALL BE MAINTAINED AROUND THE CIRCUMFERENCE OF THE FIRE HYDRANT CONNECTION AND THE FIRE HYDRANT.

4. FIRE HYDRANTS MUST BE LOCATED WITHIN 8' OF THE CURB.

5. NEW HYDRANTS MUST BE AVAILABLE FOR USE PRIOR TO CONSTRUCTION OF THE BUILDINGS.

6. THE CONTRACTOR SHALL MAINTAIN AN ALL WEATHER ACCESS FOR EMERGENCY VEHICLES AT ALL TIMES DURING CONSTRUCTION.

7. TEMPORARY STREET SIGNS SHALL BE INSTALLED AT EACH STREET INTERSECTION WHEN CONSTRUCTION OF NEW ROADWAYS ALLOWS PASSAGE BY VEHICLES.

8. UNDERGROUND FIRE LINE AND PRIVATE WATER MAINS MUST BE PERMITTED AND INSPECTED BY THE WILMINGTON FIRE DEPARTMENT FROM THE PUBLIC RIGHT-OF-WAY TO THE BUILDING. CONTACT THE WILMINGTON FIRE DEPARTMENT DIVISION OF FIRE AND LIFE SAFETY AT 910-343-0696 FOR ADDITIONAL INFORMATION.

9. A MINIMUM OF 5' SHALL SEPARATE UNDERGROUND FIRE LINES OR PRIVATE WATER MAINS FROM OTHER UNDERGROUND UTILITIES.

UTILITY NOTES:

1. BACKFLOW DEVICES SHALL USE A USC APPROVED WATTS 909 REDUCED PRESSURE ZONE BACKFLOW PREVENTOR OR APPROVED EQUAL. FIRE LINE SHALL USE A USC APPROVED WATTS 909 DOUBLE DETECTOR CHECK ASSY. OR APPROVED EQUAL.
2. BUILDING CONSTRUCTION TYPE IS IIB.
3. EXISTING PUBLIC SEWER SERVICE TO SERVE PROPOSED STARBUCKS.
4. EXISTING PUBLIC WATER SERVECE TO SERVE PROPOSED STARBUCKS.
5. PROPOSED WATER/SEWER USAGE:
6. SURVEY AND BOUNDARY INFORMATION BY HANOVER DESIGN SERVICES, P.A.
7. WETLANDS DO NOT EXIST WITHIN SITE AREA.
8. WATER: 885 GPD/EMP.
   SEWER: 885 GPD/EMP.
9. A UTILITY CUT PERMIT IS REQUIRED FOR EACH OPEN CUT OF A CITY STREET. CONTACT SKEET CARR AT 341-5888 FOR MORE DETAILS. IN CERTAIN CASES AN ENTIRE RESURFACING OF THE AREA BEING OPEN CUT MAY BE REQUIRED.

For each open utility cut of City streets, a $325 permit shall be required from the City prior to occupancy and/or project acceptance.

Approved Construction Plan

	Name	Date
Planning	Dawson Brothers	11/29/12
Public Utilities	N/A	
Traffic	Thomas Murphy	11/29/12
Fire	Steve Ellis	11/26/2012

CITY OF WILMINGTON NORTH CAROLINA
Public Services • Engineering Division
APPROVED DRAINAGE PLAN
Date: 11/29/12 Permit # 22012033
Signed:

NCDENR PWSS WATER PERMIT #: _____
WATER CAPACITY: _____ GPD
DWQ SEWER PERMIT #: _____
SEWER CAPACITY: _____ GPD
SEWER SHED # AND PLANT: _____
SEWER TO FLOW THROUGH NEI: YES or NO (CIRCLE ONE)

SCALE: 1" = 20'
0 20 40 60

SYMBOL	DATE	DESCRIPTION	BY
		REVISIONS	

© 2012 NORRIS & TUNSTALL

UTILITY PLAN

STARBUCKS - STORE #18295
3502 OLEANDER DR.
WILMINGTON, N. C.

OWNER/DEVELOPER
MR. NELSON MACRAE, PRESIDENT
THE OLEANDER COMPANY, INC.
P.O. BOX 3145
WILMINGTON, NC. 28406
910 392-3300
910 392-5123

NORRIS & TUNSTALL
CONSULTING ENGINEERS, INC.
1127 FLORAL PARKWAY
SUITES 300 & 400
WILMINGTON, NC 28403
PHONE (910) 343-9653
FAX (910) 343-9604
office@nkteng.com
licence #C-3641

12040

DES.	JST
CKD.	JPN
DRWN.	NKS
DATE	11/20/12

NORTH CAROLINA PROFESSIONAL SEAL 19851 ENGINEER JOHN S. TUNSTALL 11/29/12

C4

CP 1304

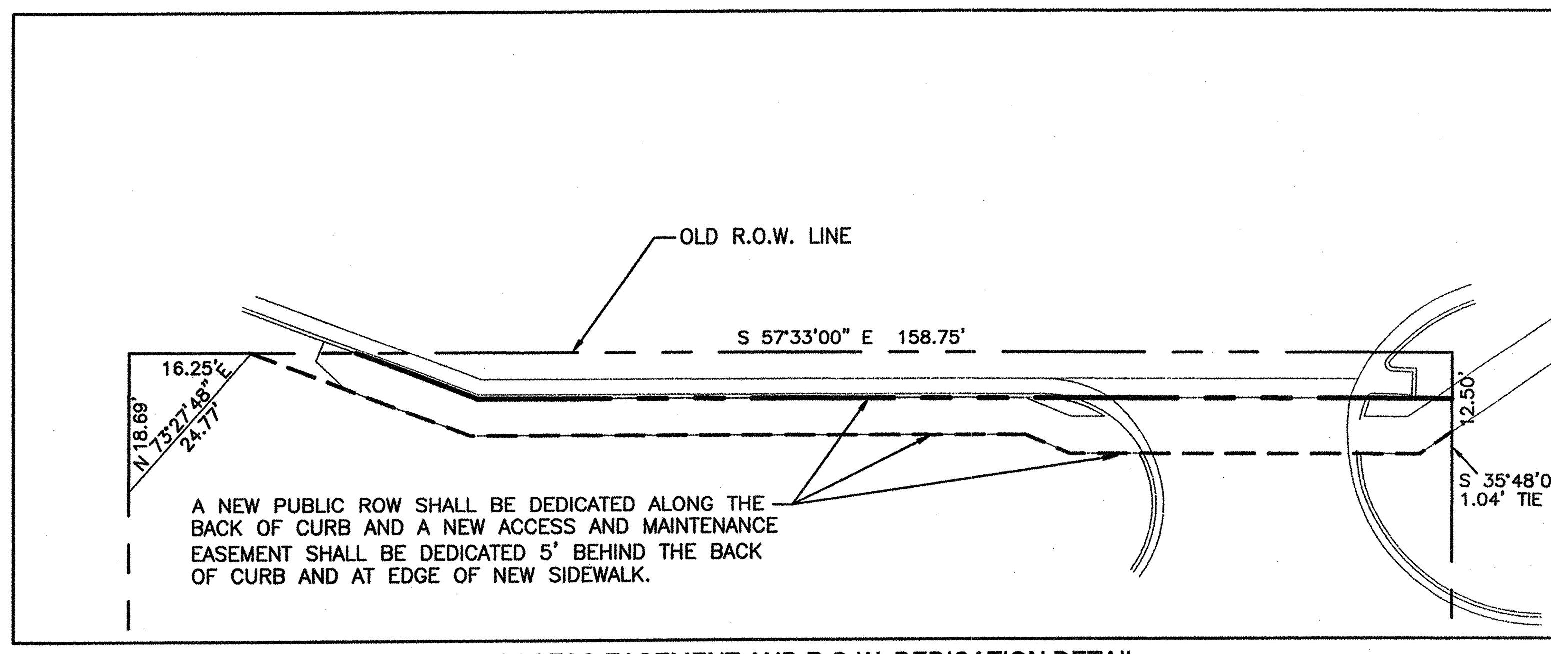

ACCESS EASEMENT AND R.O.W. DEDICATION DETAIL
SCALE: 1"=20'

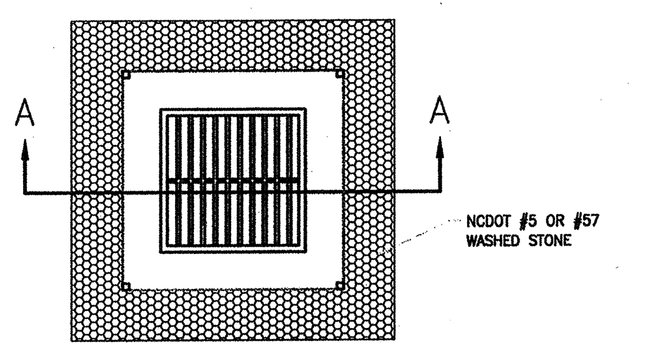

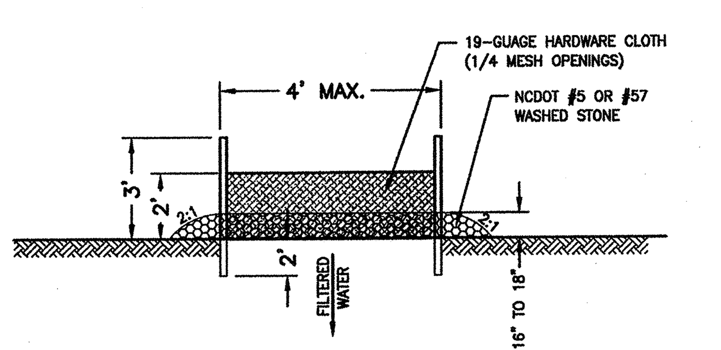

SECTION A-A

HARDWARE CLOTH & GRAVEL INLET PROTECTION
NTS

CONSTRUCTION SEQUENCE:
1. UNIFORMLY GRADE A SHALLOW DEPRESSION APPROACHING THE INLET.
2. DRIVE 5' STEEL POST 2' INTO THE GROUND SURROUNDING THE INLET. SPACE POST EVENLY AROUND THE PERIMETER OF THE INLET, A MAXIMUM OF 4' APART.
3. SURROUND THE POST WITH WIRE MESH HARDWARE CLOTH. SECURE THE WIRE MESH TO THE STEEL POST AT THE TOP, MIDDLE AND BOTTOM. PLACING A 2' FLAP OF THE WIRE MESH UNDER THE GRAVEL FOR ANCHORING IS RECOMMENDED.
4. PLACE CLEAN GRAVEL (NCDOT #5 OR #57 STONE) ON A 2:1 SLOPE WITH A HEIGHT OF 16" AROUND THE WIRE, AND SMOOTH TO AN EVEN GRADE.
5. ONCE THE CONTRIBUTING DRAINAGE AREA HAS BEEN STABILIZED, REMOVE ACCUMULATED SEDIMENT, AND ESTABLISH FINAL GRADING ELEVATIONS.
6. COMPACT THE AREA PROPERLY AND STABILIZE IT WITH GROUNDCOVER.

MAINTENANCE:
INSPECT INLETS AT LEAST WEEKLY AND AFTER EACH SIGNIFICANT (1/2 INCH OR GREATER) RAINFALL EVENT. CLEAR THE MESH WIRE OF ANY DEBRIS OR OTHER OBJECTS TO PROVIDE ADEQUATE FLOW FOR SUBSEQUENT RAINS. TAKE CARE NOT TO DAMAGE OR UNDERCUT THE WIRE MESH DURING SEDIMENT REMOVAL. REPLACE STONE AS NEEDED.

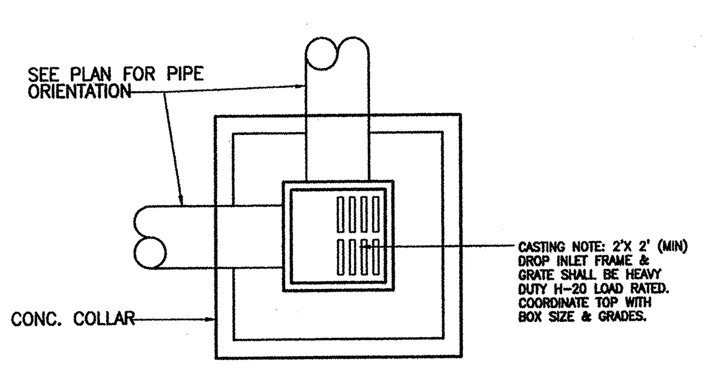

PLAN

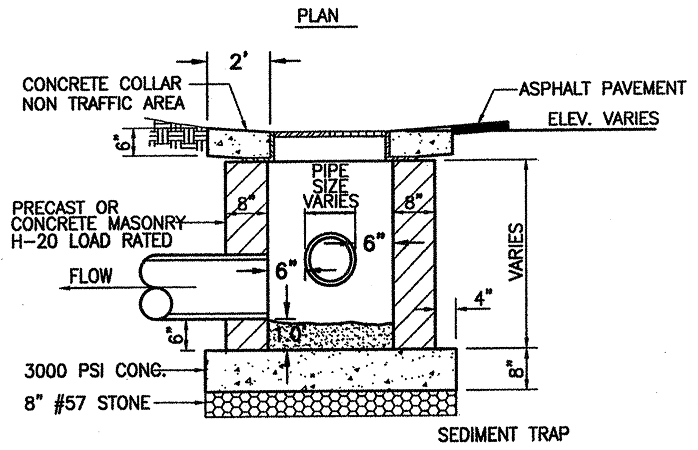

SECTION

MUST COMPLY WITH CITY OF WILMINGTON STANDARDS

DROP INLET DETAIL
NTS

BEAVER DAM®

Installation and Maintenance Guidelines

Installation: The empty Beaver Dam® should be placed over the grate as the grate stands on end. If using optional oil absorbents; place absorbent pillow on pouch, on the bottom (below-grade side) of the unit. Attach absorbent pillow to tether loop. Tuck the enclosure flap inside to completely enclose the grate. Holding the lifting devices (do not rely on lifting devices to support the entire weight of the grate), place the grate into its frame (street side first), then lower back edge with dam into place. The Beaver Dam® should be partially blocking the curb hood when installed properly.

Maintenance: Remove all accumulated sediment and debris from surface and vicinity of unit after each storm event. Remove sediment that has accumulated within the containment area of the Beaver Dam® as needed. If using optional oil absorbents; remove and replace absorbent pillow when near saturation.

BEAVER DAM®

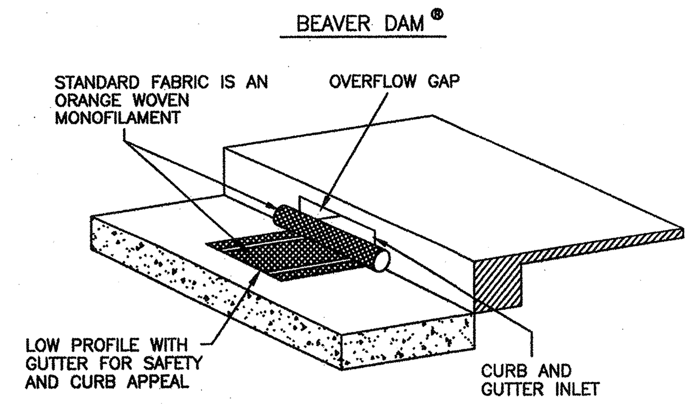

DESIGN CONFORMS TO ALL SHAPES OF CONCRETE CURBS

EROSION CONTROL INLET PROTECTION
NTS
* USE AT EXISTING CURB INLETS IN PAVED AREAS.

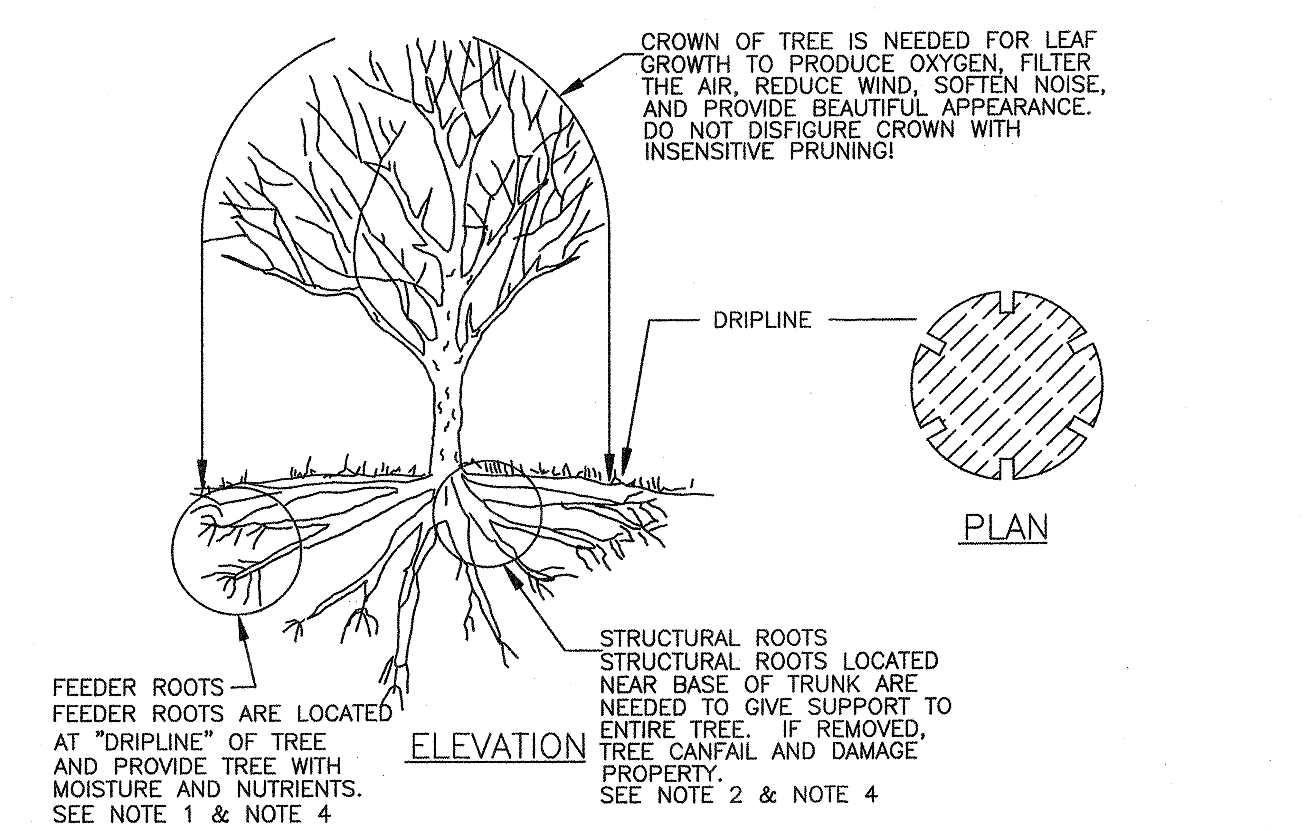

TREE PROTECTION DURING CONSTRUCTION

1. DO NOT COMPACT SOIL BENEATH TREES. NO VEHICLE SHALL BE ALLOWED TO PARK UNDER TREES. NO HEAVY MATERIALS SHALL BE STORED BENEATH TREES. RESULTS OF COMPACTION CAUSE WATER AND AIR NOT TO REACH THE ROOTS AND THE TREE WILL DIE. THESE "FEEDING ROOTS" OCCUR WELL AWAY FROM THE BASE OF THE TREE TO THE EDGE OF THE OVERHEAD BRANCH CANOPY. DAMAGING THE BARK WITH LAWNMOWERS, CONSTRUCTION EQUIPMENT, OR ANYTHING ELSE IS PROHIBITED. APROTECTIVE BARRIER SHOULD PREVENT DAMAGE FROM OCCURING DURING CONSTRUCTION.
2. NO CUTTING OF LARGE STRUCTURAL ROOTS LOCATED NEAR THE BASE OF THE TRUNK. THESE ARE ESSENTIAL IN SUPPORTING THE TREE AND HOLDING IT UPRIGHT IN HIGH WINDS. REMOVAL OF THESE ROOTS ALONG ONE SIDE IS OFTEN DONE BECAUSE OF A WALK, PAVING OR BUILDING WHICH IS BEING CONSTRUCTED.
3. AVOID CUT AND FILL WITHIN DIAMETER OF TREE CROWN DURING EXCAVATION.

METHOD OF TREE PROTECTION DURING CONSTRUCTION
SD 15-09
nts

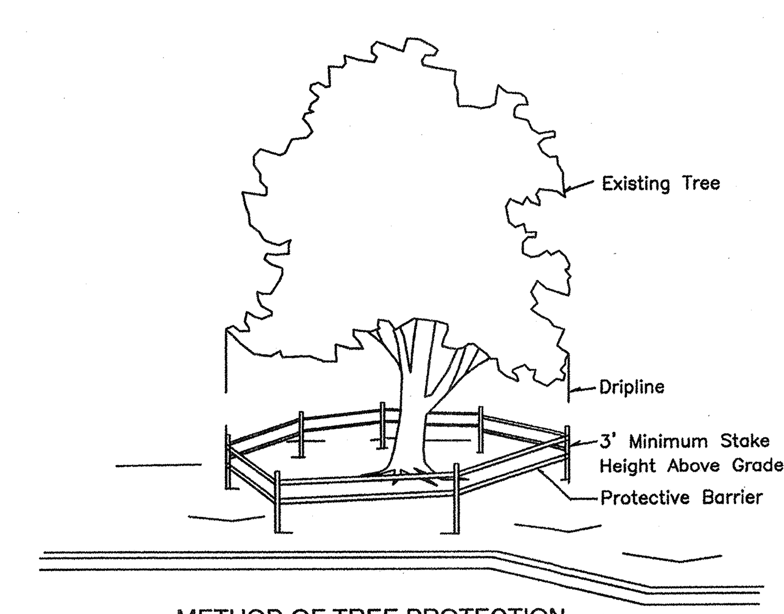

METHOD OF TREE PROTECTION NTS

CLEARLY mark the trees to be saved prior to construction and erect a protective barrier at the dripline.

Dripline–The area of soil directly beneath the tree extending out to the tips of the outermost branches.

EROSION CONTROL NOTES AND MAINTENANCE PLAN

1. ALL EROSION AND SEDIMENT CONTROL MEASURES WILL BE CHECKED FOR STABILITY AND OPERATION FOLLOWING EVERY RUNOFF-PRODUCING RAINFALL, BUT IN NO CASE, LESS THAN ONCE EVERY WEEK AND WITHIN 24 HOURS OF EVERY HALF-INCH RAINFALL.

2. ALL POINTS OF EGRESS WILL HAVE CONSTRUCTION ENTRANCES THAT WILL BE PERIODICALLY TOP-DRESSED WITH AN ADDITIONAL 2 INCHES OF #4 STONE TO MAINTAIN PROPER DEPTH. THEY WILL BE MAINTAINED IN A CONDITION TO PREVENT MUD OR SEDIMENT FROM LEAVING THE SITE. IMMEDIATELY REMOVE OBJECTIONABLE MATERIAL SPILLED WASHED OR TRACKED ONTO THE CONSTRUCTION ENTRANCE OR ROADWAYS.

3. SEDIMENT WILL BE REMOVED FROM HARDWARE CLOTH AND GRAVEL INLET PROTECTION, BLOCK AND GRAVEL INLET PROTECTION, ROCK DOUGHNUT INLET PROTECTION AND ROCK PIPE INLET PROTECTION WHEN THE DESIGNED STORAGE CAPACITY HAS BEEN HALF FILLED WITH SEDIMENT. ROCK WILL BE CLEANED OR REPLACED WHEN THE SEDIMENT POOL NO LONGER DRAINS AS DESIGNED. DEBRIS WILL BE REMOVED FROM THE ROCK AND HARDWARE CLOTH TO ALLOW PROPER DRAINAGE. SILT SACKS WILL BE EMPTIED ONCE A WEEK AND AFTER EVERY RAIN EVENT. SEDIMENT WILL BE REMOVED FROM AROUND BEAVER DAMS, DANDY SACKS AND SOCKS ONCE A WEEK AND AFTER EVERY RAIN EVENT.

4. DIVERSION DITCHES WILL BE CLEANED OUT IMMEDIATELY TO REMOVE SEDIMENT OR OBSTRUCTIONS FROM THE FLOW AREA. THE DIVERSION RIDGES WILL ALSO BE REPAIRED. SWALES MUST BE TEMPORARILY STABILIZED WITHIN 21 CALENDAR DAYS OF CEASE OF ANY PHASE OF ACTIVITY ASSOCIATED WITH A SWALE.

5. SEDIMENT WILL BE REMOVED FROM BEHIND THE SEDIMENT FENCE WHEN IT BECOMES HALF FILLED. THE SEDIMENT FENCE WILL BE REPAIRED AS NECESSARY TO MAINTAIN A BARRIER. STAKES MUST BE STEEL. STAKE SPACING WILL BE 6 FEET MAX. WITH THE USE OF EXTRA STRENGTH FABRIC, WITHOUT WIRE BACKING. STAKE SPACING WILL BE 8 FEET MAX. WHEN STANDARD STRENGTH FABRIC AND WIRE BACKING ARE USED. IF ROCK FILTERS ARE DESIGNED AT LOW POINTS IN THE SEDIMENT FENCE, THE ROCK WILL BE REPAIRED OR REPLACED IF IT BECOMES HALF-FULL OF SEDIMENT, NO LONGER DRAINS AS DESIGNED OR IS DAMAGED.

6. SEDIMENT WILL BE REMOVED FROM SEDIMENT TRAPS WHEN THE DESIGNED STORAGE CAPACITY HAS BEEN HALF FILLED WITH SEDIMENT. THE ROCK WILL BE CLEANED OR REPLACED WHEN THE SEDIMENT POOL NO LONGER DRAINS OR WHEN THE ROCK IS DISLODGED. BAFFLES WILL BE REPAIRED OR REPLACED IF THEY COLLAPSE, TEAR, DECOMPOSE OR BECOME INEFFECTIVE. THEY WILL BE REPLACED PROMPTLY. SEDIMENT WILL BE REMOVED WHEN DEPOSITS REACH HALF THE HEIGHT OF THE 1ST BAFFLE. FLOATING SKIMMERS WILL BE INSPECTED AND KEPT CLEAN WEEKLY.

7. SEDIMENT WILL BE REMOVED FROM THE SEDIMENT BASIN WHEN THE DESIGN STORAGE CAPACITY HAS BEEN HALF FILLED WITH SEDIMENT. ROCK WILL BE CLEANED OR REPLACED WHEN THE SEDIMENT POOL NO LONGER DRAINS OR IF THE ROCK IS DISLODGED. BAFFLES WILL BE REPAIRED OR REPLACED IF THEY COLLAPSE, TEAR, DECOMPOSE OR BECOME INEFFECTIVE. THEY WILL BE REPLACED PROMPTLY. SEDIMENT WILL BE REMOVED FROM BAFFLES WHEN DEPOSITS REACH HALF THE HEIGHT OF THE 1ST BAFFLE. FLOATING SKIMMERS WILL BE INSPECTED WEEKLY AND WILL BE KEPT CLEAN.

8. LAND QUALITY REQUIRES:
ALL SEEDED AREAS WILL BE FERTILIZED, RESEEDED AS NECESSARY, AND MULCHED, ACCORDING TO SPECIFICATIONS IN THE VEGETATIVE PLAN, TO MAINTAIN A VIGOROUS, DENSE VEGETATIVE COVER. ALL SLOPES WILL BE STABILIZED WITHIN 21 CALENDAR DAYS. ALL OTHER AREAS WILL BE STABILIZED WITHIN 15 WORKING DAYS.
WATER QUALITY REQUIRES:
ALL SEEDED AREAS WILL BE FERTILIZED, RESEEDED AS NECESSARY AND MULCHED ACCORDING TO SPECIFICATIONS IN THE VEGETATIVE PLAN TO MAINTAIN A VIGOROUS, DENSE VEGETATIVE COVER. ALL PERIMETER DIKES, SWALES, DITCHES, PERIMETER SLOPES, ALL SLOPES STEEPER THAN 3' HORIZONTAL TO 1' VERTICAL (3:1) AND ALL HIGH QUALITY WATER (HQW) ZONES SHALL BE PROVIDED TEMPORARY OR PERMANENT STABILIZATION WITH GROUND COVER AS SOON AS PRACTICABLE BUT IN ANY EVENT WITHIN SEVEN (7) CALENDAR DAYS FROM THE LAST LAND-DISTURBING ACTIVITY. ALL OTHER DISTURBED AREAS SHALL BE PROVIDED TEMPORARY OR PERMANENT STABILIZATION WITH GROUND COVER AS SOON AS PRACTICABLE BUT IN ANY EVENT WITHIN FOURTEEN (14) CALENDAR DAYS FROM THE LAST LAND-DISTURBING ACTIVITY.

9. FLOCCULANTS WILL BE USED TO ADDRESS TURBIDITY ISSUES. THE PUMPS, TANKS, HOSES AND INJECT SYSTEMS WILL BE CHECKED FOR PROBLEMS OR TURBID DISCHARGES DAILY.

10. BASIN OUTLET STRUCTURES AND SKIMMERS SHALL WITHDRAW WATER FROM THE SURFACE.

TREE PROTECTION NOTES

1. THE CONTRACTOR IS RESPONSIBLE FOR INSTALLING TREE PROTECTION FENCING AROUND THE EXISTING TREES BEING SAVED PRIOR TO BEGINNING ANY CONSTRUCTION WORK. THE CONTRACTOR SHALL SAWCUT ANY PERIMETER TREE ROOTS THAT CONFLICT WITH GRADING OPERATIONS. EXISTING TREES WILL BE REMOVED FROM THE SITE AS REQUIRED FOR CONSTRUCTION OF PONDS, ROADWAYS, ROAD IMPROVEMENTS, AND UTILITY INSTALLATION. ALL THE EXISTING VEGETATION AND TREES WILL REMAIN OUTSIDE THE DISTURBED AREA/CONSTRUCTION LIMITS.

2. PROTECTIVE FENCING IS TO BE PROPERLY MAINTAINED THROUGHOUT THE DURATION OF THE PROJECT.

3. LAND CLEARING AND CONSTRUCTION CONTRACTORS SHALL RECEIVE ADEQUATE INSTRUCTION ON TREE PROTECTION REQUIREMENTS AND METHODS.

4. ANY TREES AND / OR AREAS DESIGNATED TO BE PROTECTED MUST BE PROPERLY BARRICADED WITH FENCING AND PROTECTED THROUGHOUT CONSTRUCTION TO INSURE THAT NO CLEARING AND GRADING OR STAGING OF MATERIALS WILL OCCUR IN THOSE AREAS.

5. NO EQUIPMENT IS ALLOWED ON THE SITE UNTIL ALL TREE PROTECTION FENCING AND SILT FENCING HAS BEEN INSTALLED AND APPROVED.

For each open utility cut of City streets, a $325 permit shall be required from the City prior to occupancy and/or project acceptance.

Approved Construction Plan

	Name	Date
Planning	[signature]	11/29/12
Public Utilities	N/A	
Traffic	[signature]	11/23/12
Fire	[signature]	11/26/2012

CITY OF WILMINGTON
NORTH CAROLINA
Public Services • Engineering Division
APPROVED DRAINAGE PLAN
Date: 11/29/12 Permit # 2012033
Signed: [signature]

NCDENR PWSS WATER PERMIT #:	
WATER CAPACITY:	GPD
DWQ SEWER PERMIT #:	
SEWER CAPACITY:	GPD
SEWER SHED # AND PLANT:	
SEWER TO FLOW THROUGH NEI:	YES or NO (CIRCLE ONE)

SYMBOL	DATE	DESCRIPTION	BY

REVISIONS

©2012 NORRIS & TUNSTALL

NOTES AND DETAILS
STARBUCKS - STORE #18295
3502 OLEANDER DR.
WILMINGTON, N. C.

OWNER/DEVELOPER
MR. NELSON MACRAE, PRESIDENT
THE OLEANDER COMPANY, INC.
P.O. BOX 3145
WILMINGTON, NC 28406
910 392-3300
910 392-5123

NORRIS & TUNSTALL
CONSULTING ENGINEERS, INC.
1127 FLORAL PARKWAY
SUITES 300 & 400
WILMINGTON, NC 28403
PHONE (910) 343-9653
FAX (910) 343-9604
office@nntceng.com
licence # C-3641

12040

DES.	JST
CKD.	JPN
DRWN.	NKS
DATE	10/31/12

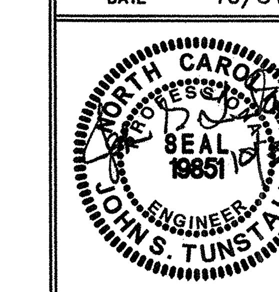

C5

CP 1304

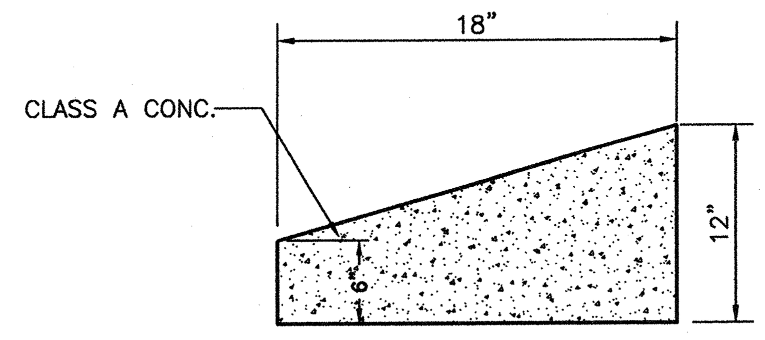

18" SLOPE CURB SECTION
NTS

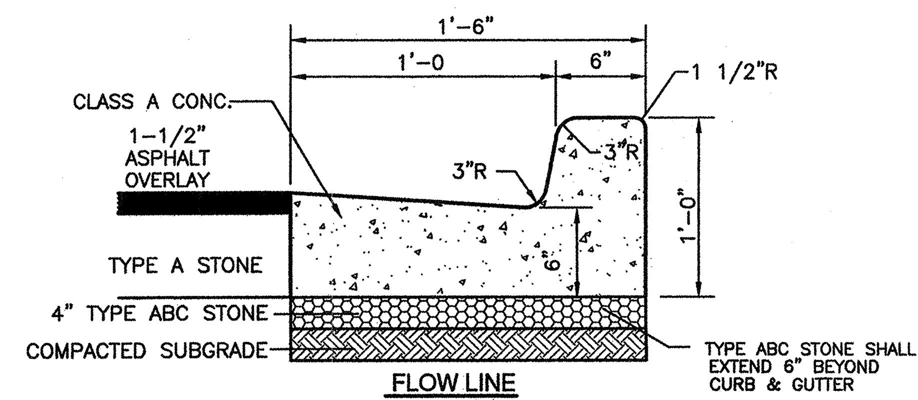

FLOW LINE
CURB SECTION ON SITE
NTS

NOTE: CURB TYPE DEPENDS ON GRADES SHOWN ON GRADING PLAN. GRADES INDICATING FALL AWAY FROM CURB SHALL BE SPILL OFF TYPE CURB. GRADES INDICATING CURB ACCEPTING FLOW SHALL BE FLOW LINE TYPE.

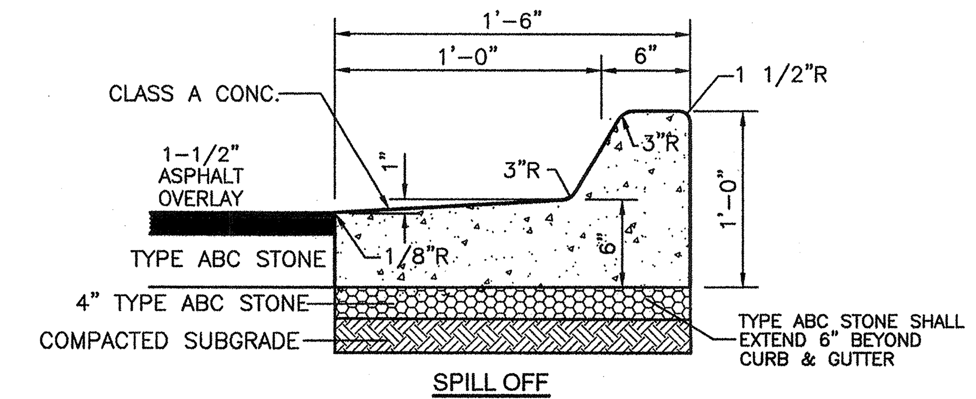

SPILL OFF
CURB SECTION ON SITE
NTS

NOTE: CURB TYPE DEPENDS ON GRADES SHOWN ON GRADING PLAN. GRADES INDICATING FALL AWAY FROM CURB SHALL BE SPILL OFF TYPE CURB. GRADES INDICATING CURB ACCEPTING FLOW SHALL BE FLOW LINE TYPE.

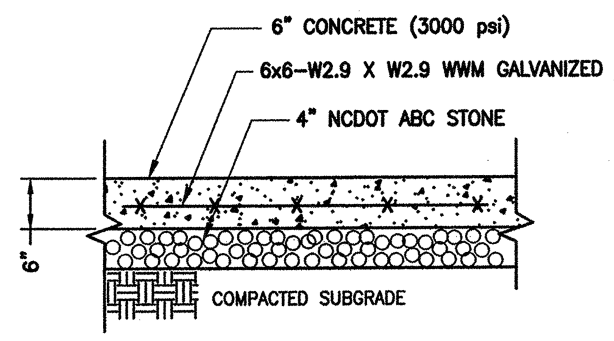

NOTES:
1. CONTROL JOINTS SHALL BE EVERY 15 FT. (MAX.) AND EXPANSION JOINTS SHALL BE EVERY 50 FT. (MAX.)
2. PAVEMENT SECTION MAY VARY DEPENDING UPON FIELD CONDITIONS. THE PAVING CONTRACTOR SHALL COORDINATE WITH OWNER REPRESENTATIVE AND GEOTECHNICAL ENGINEER TO DETERMINE ACTUAL PAVEMENT SECTION.

HEAVY DUTY CONCRETE PAVEMENT SECTION
NTS

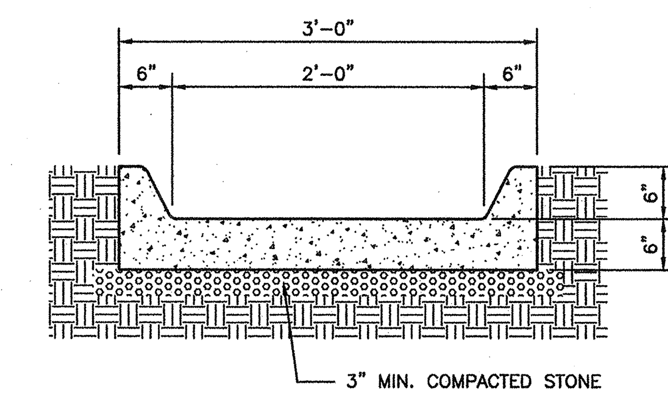

CONCRETE FLUME
NTS

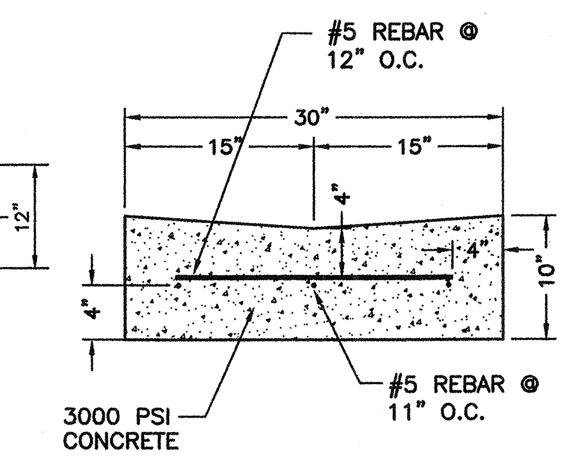

REINFORCED VALLEY GUTTER DETAIL
NTS

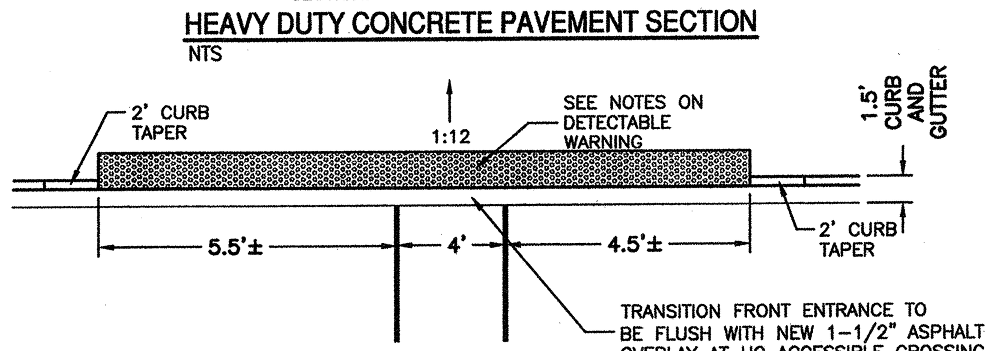

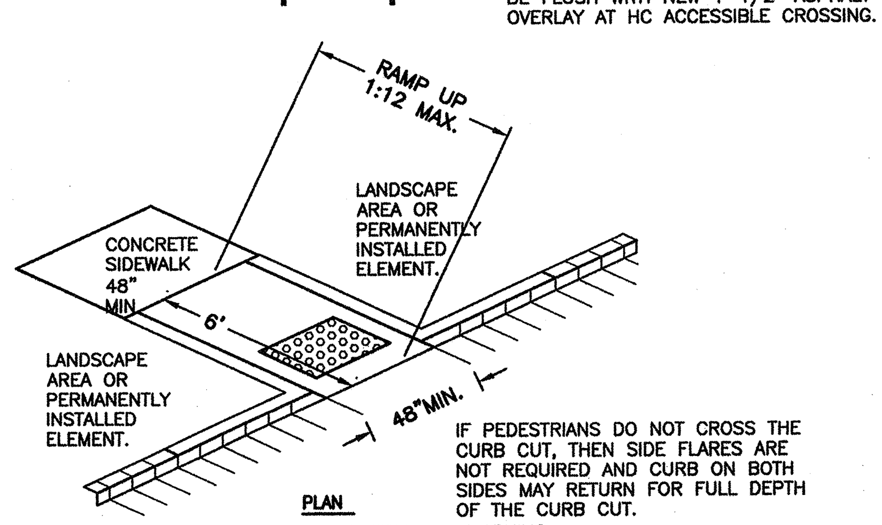

IF PEDESTRIANS DO NOT CROSS THE CURB CUT, THEN SIDE FLARES ARE NOT REQUIRED AND CURB ON BOTH SIDES MAY RETURN FOR FULL DEPTH OF THE CURB CUT.

PLAN

* SEE NOTES ON DETECTABLE WARNING

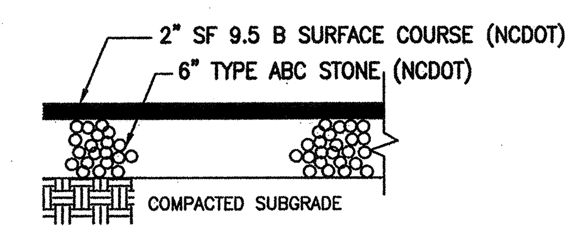

NOTE: PAVEMENT SECTION MAY VARY DEPENDING UPON FIELD CONDITIONS. CONTRACTOR SHALL COORDINATE w/OWNER & GEOTECHNICAL ENGINEER TO DETERMINE ACTUAL PAVEMENT SECTION.

ASPHALT REPAIR PAVEMENT SECTION
NTS

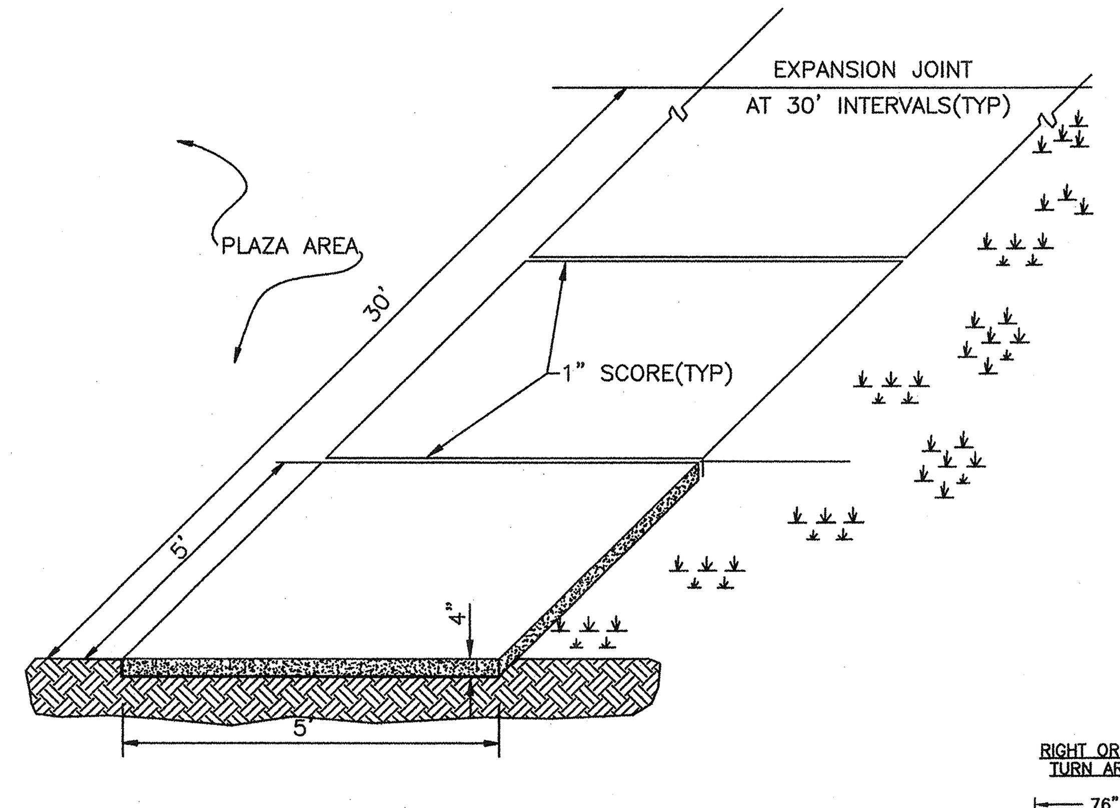

STANDARD SIDEWALK DETAIL
SD 8-15
NOT TO SCALE

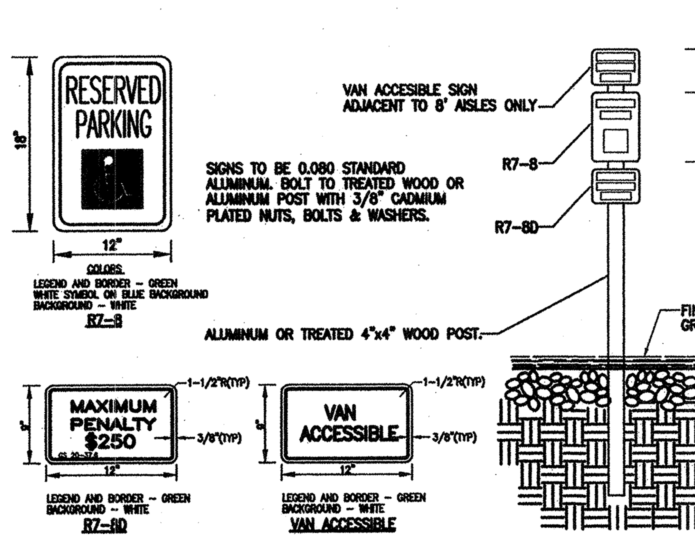

TYPICAL HANDICAPPED SIGN DETAIL
NTS

NOTES:
1. SIDEWALK THICKNESS SHALL BE 4" UNLESS NOTED OTHERWISE.
2. CONTRACTION JOINTS (C.J.) SPACE SAME AS SIDEWALK WIDTH.
3. THICKEN SIDEWALK TO 6" AT DRIVEWAYS.
4. THICKEN SIDEWALK TO 6" IN LAST 3' WHERE IT ABUTS PAVEMENT WITH NO CURB.
5. 1/2" EXPANSION JOINT (E.J.) AND SNAP CAP EXPANSION JOINT COVERS ARE REQUIRED AT 50' MAX. AT SIDEWALK JUNCTIONS, AT STRUCTURES, AND AS NOTED ON SITE PLAN.
6. PROVIDE A LAYER OF 15# BLDG. FELT BETWEEN WALK AND ADJACENT PARALLELING CURB OR STRUCTURE.

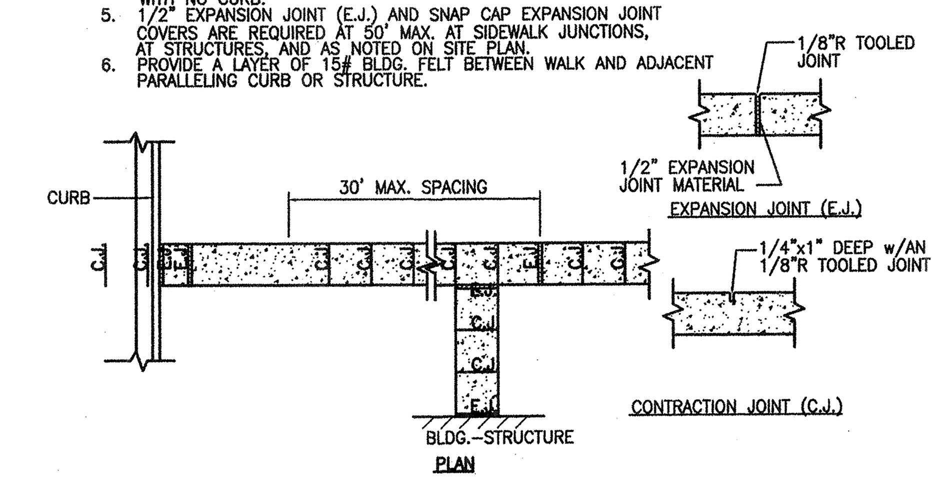

SIDEWALK JOINT DETAILS
NTS

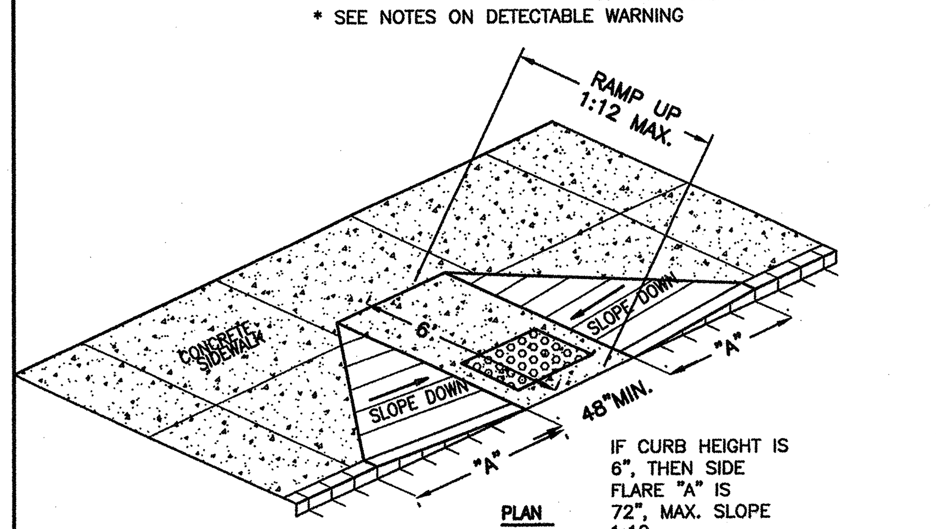

IF CURB HEIGHT IS 6", THEN SIDE FLARE "A" IS 72", MAX. SLOPE 1:12.

PLAN

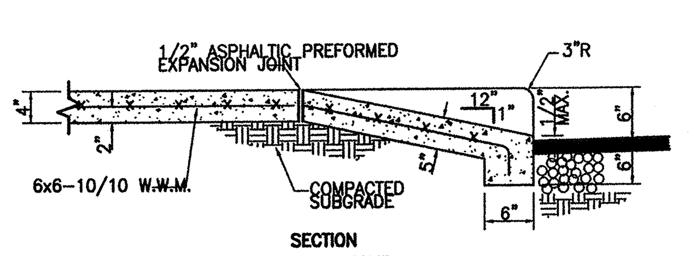

SECTION
WHEEL CHAIR RAMP

NOTE:
1. RAMP SHALL HAVE A DETECTABLE WARNING COMPLYING WITH ADA GUIDELINES:
2. THE DETECTABLE WARNINGS AT CURB RAMPS SHALL BE 24 INCHES MINIMUM IN THE DIRECTION OF TRAVEL AND EXTEN THE FULL WIDTH OF THE CURB RAMP OR FLUSH SURFACE.
3. MARKED CROSSINGS THAT ARE RAISED TO THE SAME LEVEL AS THE ADJOINING SIDEWALK SHALL BE PRECEDED BY A 24 INCH DEEP DETECTABLE WARNING EXTENDING THE FULL WIDTH OF THE MARKED CROSSING.
4. DETECTABLE WARNINGS SHALL CONSIST OF RAISED TRUNCATED DOMES WITH A DIAMETER OF NOMINAL 0.9 IN (23 MM), A HEIGHT OF NOMINAL 0.2 IN (5 MM) AND A CENTER-TO-CENTER SPACING OF NOMINAL 2.35 IN (60 MM) AND SHALL CONTRAST VISUALLY WITH ADJOINING SURFACES, EITHER LIGHT-ON-DARK, OR DARK-ON-LIGHT. THE MATERIAL USED TO PROVIDE CONTRAST SHOULD CONTRAST BY AT LEAST 70% – REFER TO ADA GUIDELINES FOR DEFINITION OF "CONTRAST".
5. THE MATERIAL USED TO PROVIDE CONTRAST SHALL BE AN INTEGRAL PART OF THE WALKING SURFACE. DETECTABLE WARNINGS USED ON INTERIOR SURFACES SHALL DIFFER FROM ADJOINING WALKING SURFACES IN RESILIENCY OR SOUND-ON-CANE CONTACT.

TYPICAL SIDEWALK AND
WHEEL CHAIR RAMP DETAIL
NTS

GENERAL NOTES

I. LOCATION OF WHEELCHAIR RAMPS:
1. IN ACCORDANCE WITH THE RATIFIED HOUSE BILL 1296, ALL STREET CURBS IN NORTH CAROLINA BEING CONSTRUCTED OR RECONSTRUCTED FOR MAINTENANCE PROCEDURES, TRAFFIC OPERATIONS, REPAIRS, CORRECTION OF UTILITIES OR ALTERED FOR ANY REASON AFTER SEPTEMBER 1, 1973 SHALL PROVIDE WHEELCHAIR RAMPS FOR THE PHYSICALLY HANDICAPPED AT ALL INTERSECTIONS WHERE BOTH CURB AND GUTTERS AND SIDEWALKS ARE PROVIDED AND AT OTHER MAJOR POINTS OF PEDESTRIAN FLOW.
2. WHEELCHAIR RAMPS SHOULD BE LOCATED AS INDICATED IN DETAIL DRAWINGS, HOWEVER EXISTING LIGHT POLES, FIRE HYDRANTS, DROP INLETS, ETC. MAY AFFECT PLACEMENT.

II. CONSTRUCTION NOTES:
1. NO SLOPE SHALL EXCEED 1"=1" (12:1) ON THE RAMP OR SIDEWALK.
2. IN NO CASE SHALL THE WIDTH OF WHEELCHAIR RAMPS BE LESS THAN 40" (3'-4"). WIDTHS MAY EXCEED 40" IF NECESSARY.
3. USE CLASS "A" CONCRETE WITH THE SURFACE HAVING A ROUGH, NON-SKID TYPE FINISH.
4. 1/2" EXPANSION JOINT WILL BE REQUIRED WHERE THE CONCRETE WHEELCHAIR RAMP JOINS ANY RIGID PAVEMENT OR STRUCTURE.
5. CONSTRUCTION METHODS SHALL CONFORM WITH THOSE OF THE GOVERNING BODY WHICH HAS JURISDICTION OF THE PARTICULAR STREET.

III. ADDITIONAL NOTES:
1. THE INSIDE PEDESTRIAN CROSSWALK LINES SHALL BE ESTABLISHED BY BISECTING THE INTERSECTION RADII WHERE MARKED (SEE NOTE 6).
2. THE WHEELCHAIR RAMP SHALL BE LOCATED SO THAT THE BEGINNING OF THE WHEEL CHAIR RAMP WILL BE TWO FEET FROM THE INSIDE PEDESTRIAN CROSSWALK LINE.
3. THE WIDTH OF THE PEDESTRIAN CROSSWALK SHALL BE 10 FEET UNLESS A GREATER WIDTH IS REQUIRED TO ACCOMMODATE THE PEDESTRIAN TRAFFIC.
4. STOP BARS SHALL BE USED WHERE IT IS IMPORTANT TO INDICATE THE POINT BEHIND WHICH VEHICLES ARE REQUIRED TO STOP IN COMPLIANCE WITH A TRAFFIC SIGNAL, STOP SIGN, OR OTHER LEGAL REQUIREMENTS.
5. PARKING SHALL BE ELIMINATED A MINIMUM OF 20 FEET BACK OF PEDESTRIAN CROSSWALK.
6. ALL PAVEMENT MARKINGS SHALL BE IN ACCORDANCE WITH THE LATEST EDITION OF THE MANUAL OF UNIFORM TRAFFIC CONTROL DEVICES, PUBLISHED BY THE FEDERAL HIGHWAY ADMINISTRATION. THIS IS AVAILABLE FROM THE SUPERINTENDENT OF DOCUMENTS, U.S GOVERNMENT PRINTING OFFICE, WASHINGTON, D.C. 20402.

GUIDELINES FOR WHEELCHAIR RAMPS
CITY OF WILMINGTON SD 8-09

CITY OF WILMINGTON STANDARD NOTES

1. CONTACT THE NORTH CAROLINA ONE CALL CENTER PRIOR TO DOING ANY DIGGING AT 1-800-632-4949.
2. PRIOR TO ANY CLEARING, GRADING OR CONSTRUCTION ACTIVITY, TREE PROTECTION FENCING WILL BE INSTALLED AROUND PROTECTED TREES OR GROVES OF TREES AND NO CONSTRUCTION WORKERS, TOOLS, MATERIALS, OR VEHICLES ARE PERMITTED WITHIN THE TREE PROTECTION FENCING;
3. ALL PAVEMENT MARKINGS IN PUBLIC RIGHTS-OF-WAY AND FOR DRIVEWAYS ARE TO BE THERMOPLASTIC AND MEET CITY AND/OR NCDOT STANDARDS.
4. ALL PARKING STALL MARKINGS AND LANE ARROWS WITHIN THE PARKING AREAS SHALL BE WHITE.
5. INSTALL REFLECTORS PER CITY AND NCDOT STANDARDS. TRAFFIC ENGINEERING MUST APPROVE OF PAVEMENT MARKING LAYOUT PRIOR TO ACTUAL STRIPING.
6. ALL TRAFFIC CONTROL SIGNS AND MARKINGS OFF THE RIGHT-OF-WAY ARE TO BE MAINTAINED BY THE PROPERTY OWNER IN ACCORDANCE WITH MUTCD STANDARDS.
7. TRAFFIC CONTROL DEVICES (INCLUDING SIGNS AND PAVEMENT MARKINGS) IN AREAS OPEN TO PUBLIC TRAFFIC ARE TO MEET MUTCD (MANUAL ON UNIFORM TRAFFIC CONTROL DEVICES) STANDARDS.
8. IT SHALL BE THE RESPONSIBILITY OF THE SUBDIVIDER TO ERECT OFFICIAL STREET NAME SIGNS AT ALL INTERSECTIONS ASSOCIATED WITH THE SUBDIVISION IN ACCORDANCE WITH THE TECHNICAL STANDARDS AND SPECIFICATIONS MANUAL. THE SUBDIVIDER MAY ACQUIRE AND ERECT OFFICIAL STREET NAME SIGNS OR MAY CHOOSE TO CONTRACT WITH THE CITY TO INSTALL THE STREET SIGNS AND THE SUBDIVIDER SHALL PAY THE COST OF SUCH INSTALLATION. CONTACT TRAFFIC ENGINEERING AT 341-7888 TO DISCUSS INSTALLATION OF TRAFFIC AND STREET NAME SIGNS. POSTED STREET NAMES MUST BE APPROVED PRIOR TO INSTALLATION OF STREET NAME SIGNS.
9. CONTACT TRAFFIC ENGINEERING AT 341-7888 FOURTY-EIGHT HOURS PRIOR TO ANY EXCAVATION IN THE RIGHT-OF-WAY.
10. A UTILITY CUT PERMIT IS REQUIRED FOR EACH OPEN CUT OF A CITY STREET. CONTACT 341-5888 FOR MORE DETAILS. IN CERTAIN CASES AN ENTIRE RESURFACING OF THE AREA BEING OPEN CUT MAY BE REQUIRED.
11. ANY BROKEN OR MISSING SIDEWALK PANELS AND CURBING WILL BE REPLACED.
12. CONTACT KAREN DIXON AT 341-7888 TO DISCUSS STREET LIGHTING OPTIONS.
13. PROJECT SHALL COMPLY WITH CFPUA CROSS CONNECTION CONTROL REQUIREMENTS. WATER METER(S) CANNOT BE RELEASED UNTIL ALL REQUIREMENTS ARE MET AND THE STATE HAS GIVEN THEIR FINAL APPROVAL. CALL 343-3910 FOR INFORMATION.
14. IF THE CONTRACTOR DESIRES CITY WATER FOR CONSTRUCTION HE SHALL APPLY IN ADVANCE FOR THIS SERVICE AND MUST PROVIDE A REDUCED PRESSURE ZONE (RPZ) BACKFLOW PREVENTION DEVICE ON THE DEVELOPER'S SIDE OF THE WATER METER BOX.
15. ANY IRRIGATION SYSTEM SUPPLIED BY CFPUA WATER SHALL COMPLY WITH CFPUA CROSS CONNECTION CONTROL REGULATIONS. CALL 332-6558 FOR INFORMATION.
16. ANY BACKFLOW PREVENTION DEVICES REQUIRED BY CFPUA WILL NEED TO BE ON THE LIST OF APPROVED DEVICES BY USCFCCCHR OR ASSE.
17. WHEN PVC WATER MAINS AND/OR POLYETHYLENE SERVICES ARE PROPOSED, THE PIPES ARE TO BE MARKED WITH NO. 10 INSULATED SINGLE STRAND COPPER WIRE INSTALLED THE ENTIRE LENGTH AND SECURED TO ALL VALVES. THIS WIRE IS TO BE ACCESSIBLE AT ALL FIRE HYDRANTS AND WATER METER BOXES TO AID IN FUTURE LOCATION OF FACILITIES.
18. THE NUMBER AND SPACING OF DRIVEWAYS FOR ALL INTERCONNECTED SITES WILL BE DETERMINED BY THE COMBINED FRONTAGE OF THE INTERCONNECTED PROPERTIES.
19. UNDERGROUND FIRE LINE MUST BE PERMITTED AND INSPECTED BY THE WILMINGTON FIRE DEPARTMENT FROM THE PUBLIC ROW TO THE BUILDING. CONTACT THE WILMINGTON FIRE DEPARTMENT DIVISION OF FIRE AND LIFE SAFETY AT 910-343-0696 FOR ADDITIONAL INFORMATION.

SITE WORK NOTES:

1. THE CONTRACTOR SHALL VISIT THE SITE TO BECOME FAMILIAR WITH FIELD CONSTRUCTION CONDITIONS.
2. CONTRACTOR SHALL COORDINATE WORK WITHIN NCDOT AND LOCAL RIGHT OF WAYS WITH PROPER AUTHORITIES AND SHALL MEET ANY REQUIREMENTS AS TO TRAFFIC CONTROL AND CONNECTION TO EXISTING STREETS.
3. CLEARING AND GRUBBING: REMOVE ALL TREES AS REQUIRED UNLESS OTHERWISE NOTED TO REMAIN, STUMPS, ROOTS, SHRUBBERY, ASPHALT, CONCRETE, STRUCTURES, BURIED UTILITIES, STORAGE TANKS, ETC. WITHIN LIMITS OF CONSTRUCTION.
4. STRIPPING: BEFORE EXCAVATING OR FILLING, REMOVE ALL TOPSOIL, WOOD, LEAVES, AND ANY OTHER UNSUITABLE MATERIAL.
5. MUCKING: REMOVE ANY SOFT, ORGANIC SILT MATERIALS AND EXISTING BURIED CONSTRUCTION DEBRIS AS REQUIRED AND FILL TO SUBGRADE ELEVATIONS WITH A CLEAN SELECT-FILL COMPACTED AS SPECIFIED.
6. DISPOSAL: CLEARED, GRUBBED, STRIPPED OR EXCAVATED SPOIL SHALL BE REMOVED FROM SITE AND DISPOSED OF IN ACCORDANCE WITH ALL APPLICABLE LOCAL AND STATE CODES.
7. BORROW MATERIAL: THE CONTRACTOR SHALL FURNISH BORROW MATERIAL REQUIRED FROM OFF SITE AND OBTAIN ALL REQUIRED PERMITS ASSOCIATED WITH BORROW OPERATIONS.
8. FILL AND COMPACTION: AFTER STRIPPING THOSE AREAS DESIGNATED TO RECEIVE FILL SHOULD BE PROOFROLLED. THE TOP 8" OF SUBGRADE SHALL BE COMPACTED TO AT LEAST 98% OF MAXIMUM DENSITY AT OPTIMUM MOISTURE CONTENT. ANY AREA WHICH PUMPS OR RUTS EXCESSIVELY SHOULD BE UNDERCUT AND REPLACED WITH A CLEAN, SILTY OR CLAYEY SAND HAVING A UNIFIED SOIL CLASSIFICATION OF SP, SM, OR SC. FILL MATERIAL 5" OUTSIDE OF BUILDING AREAS SHALL THEN BE PLACED IN LAYERS NOT TO EXCEED 8" AND COMPACTED TO AT LEAST 95% OF THE STANDARD PROCTOR MAXIMUM DRY DENSITY (ASTM D-698) WITH THE UPPER 12 INCHES OF SUBGRADE BEING COMPACTED TO 98% OF THE STANDARD PROCTOR MAXIMUM DRY DENSITY. FILL MATERIALS WITHIN BUILDING AREAS TO A LINE OUTSIDE THE BUILDING AREAS SHALL BE PLACED IN LAYERS NOT TO EXCEED 8" AND COMPACTED TO AT LEAST 98% OF THE STANDARD PROCTOR MAXIMUM DRY DENSITY (ASTM D-698) WITH THE UPPER 12 INCHES OF SUBGRADE BEING COMPACTED IN 6 INCH LAYERS TO 100% OF THE STANDARD PROCTOR MAXIMUM DRY DENSITY. IN AREAS WHERE NO STRUCTURAL FILL IS TO BE PLACED THE UPPER 12 INCHES OF IN-PLACE SUBGRADE SHOULD BE COMPACTED TO AT LEAST 98% OF THE STANDARD PROCTOR MAXIMUM DRY DENSITY. IF THE MATERIAL IS TOO DRY TO COMPACT TO THE REQUIRED DENSITY EACH LAYER SHALL BE WETTED IN ACCORDANCE WITH COMPACTION REQUIREMENTS. IF THE MATERIAL IS TOO WET TO SECURE PROPER COMPACTION, IT SHALL BE HARROWED REPEATEDLY OR OTHERWISE AERATED WITH SUITABLE EQUIPMENT UNTIL OPTIMUM MOISTURE CONTENT IS OBTAINED. FILL SHALL BE PLACED IN SUCH A MANNER THAT THE SURFACE WILL DRAIN READILY AT ALL TIMES. SEE STRUCTURAL NOTES AND SOILS REPORT FOR ADDITIONAL REQUIREMENTS.
9. LAYOUT: THE CONTRACTOR SHALL PROVIDE ALL LAYOUT REQUIRED TO CONSTRUCT HIS WORK.
10. THE CONTRACTOR IS RESPONSIBLE FOR THE LOCATION AND PROTECTION OF EXISTING UTILITIES DURING CONSTRUCTION.
11. EXISTING BOUNDARY AND TOPOGRAPHIC INFORMATION FROM SURVEY BY HANOVER DESIGN SERVICES AND PROVIDED BY OWNER.
12. THE CONTRACTOR SHALL VERIFY DIMENSIONS AT JOBSITE.
13. THE CONTRACTOR IS RESPONSIBLE FOR THE COORDINATION OF RELOCATION OR DISCONNECTION OF ALL EXISTING UTILITIES WITH APPLICABLE AGENCIES AND AUTHORITIES.
14. ALL PAVEMENT AND BASE MATERIALS AND WORKMANSHIP SHALL CONFORM TO NCDOT STANDARDS.
15. WATER AND SEWER SERVICES SHALL BE INSTALLED TO MEET LOCAL AND STATE PLUMBING CODES. METER AND TAPS SHALL MEET ALL LOCAL REQUIREMENTS.
16. ALL AREAS SHALL BE GRADED FOR POSITIVE DRAINAGE.
17. SEE SOILS REPORT FOR ADDITIONAL REQUIREMENTS.
18. CONTRACTOR SHALL NOTE THAT EARTHWORK QUANTITIES ARE HIS RESPONSIBILITY. PLANS DO NOT REPRESENT A BALANCED EARTHWORK CONDITION.
19. REINF. CONC. PIPE SHALL BE CLASS III W/RUBBER GASKETED JOINT OR "RAM NECK". INSTALL PER MANUFACTURER'S REQUIREMENTS.
20. USE WHITE LANE MARKING PAINT FOR ALL PAVEMENT MARKINGS. PAINT SHALL BE A CHLORINATED RUBBER ALKYD, FS TT-P-115, TYPE III, FACTORY MIXED, QUICK DRYING, NON-BLEEDING.
21. REFER TO THE PLUMBING DRAWINGS FOR LOCATION AND INVERTS OF NEW WASTE AND WATER LINES.

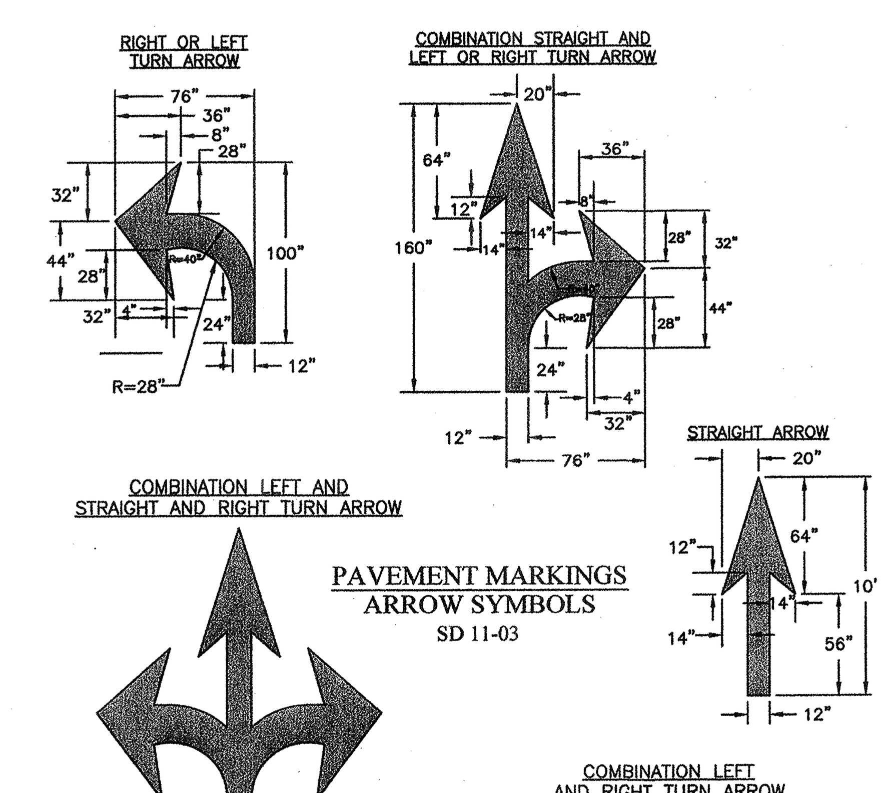

PAVEMENT MARKINGS
ARROW SYMBOLS
SD 11-03

GENERAL NOTES
-ALL PAVEMENT MARKING SYMBOLS SHALL BE WHITE IN COLOR
-PAVEMENT MARKING SYMBOLS SHALL NOT BE LOCATED AS TO ENCROACH INTO INTERSECTION AREAS.
-ON PORTLAND CEMENT CONCRETE PAVEMENTS, PAVEMENT MARKING SYMBOLS SHALL NOT BE PLACED ACROSS TRANSVERSE EXPANSION JOINTS UNLESS APPROVED BY THE ENGINEER.

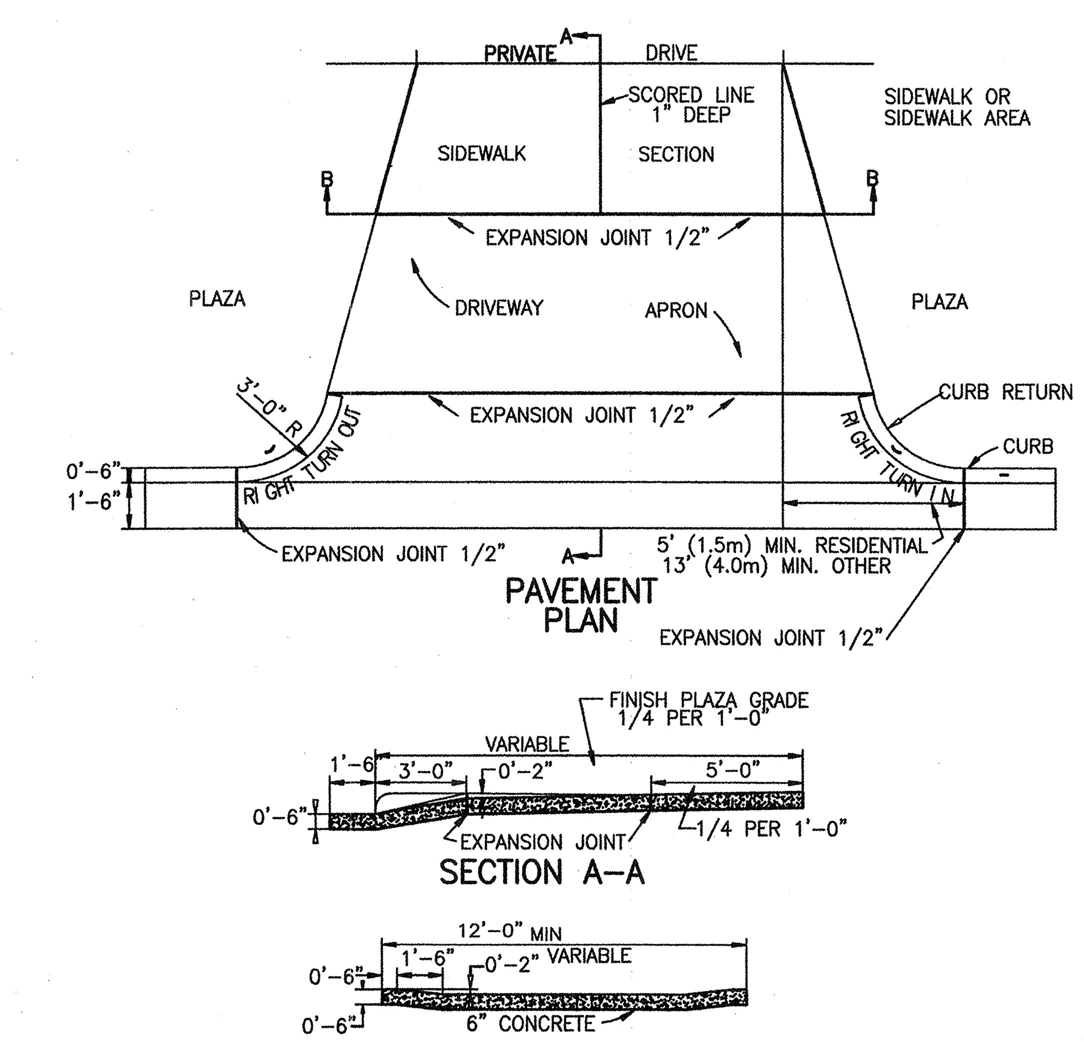

PAVEMENT PLAN

SECTION A–A

SECTION B–B

STANDARD DRIVEWAY DETAIL
NTS

For each open utility cut of City streets, a $325 permit shall be required from the City prior to occupancy and/or project acceptance.

Approved Construction Plan

	Name	Date
Planning	Dawn M. [signature]	11/29/12
Public Utilities	N/A	
Traffic	[signature] Murphy	11/29/12
Fire	[signature]	11/29/2012

CITY OF WILMINGTON
NORTH CAROLINA
Public Services • Engineering Division
APPROVED DRAINAGE PLAN
Date: 11/29/12 Permit # 2012033
Signed: [signature]

NCDENR PWSS WATER PERMIT #:	
WATER CAPACITY:	GPD
DWQ SEWER PERMIT #:	
SEWER CAPACITY:	GPD
SEWER SHED # AND PLANT:	
SEWER TO FLOW THROUGH NEI:	YES or NO (CIRCLE ONE)

SYMBOL	DATE	DESCRIPTION	BY

REVISIONS

© 2012 NORRIS & TUNSTALL

NOTES AND DETAILS

STARBUCKS - STORE #18295
3502 OLEANDER DR.
WILMINGTON, N. C.

OWNER/DEVELOPER
MR. NELSON MACRAE, PRESIDENT
THE OLEANDER COMPANY, INC.
P.O. BOX 3145
WILMINGTON, NC. 28406
910 392-3300
910 392-5123

NORRIS & TUNSTALL
CONSULTING ENGINEERS, INC.
1127 FLORAL PARKWAY
SUITES 300 & 400
WILMINGTON, NC 28403
PHONE (910) 343-9653
FAX (910) 343-9604
office@nteng.com
licence #C-3641

12040

DES. JST
CKD. JPN
DRWN. NKS
DATE 10/30/12

NORTH CAROLINA PROFESSIONAL ENGINEER SEAL 19851 JOHN S. TUNSTALL

C6

CP 1304

STATE OF NORTH CAROLINA DEPT. OF TRANSPORTATION DIVISION OF HIGHWAYS RALEIGH, N.C.

7-08

ENGLISH STANDARD DRAWING FOR **PAVEMENT MARKINGS** LINE TYPES

SHEET 1 OF 2 **1205.01**

CONTINUOUS LINES

EDGE LINE — YELLOW OR WHITE — 4"/6"*

TURN LANE LINE — WHITE — 4"/6"*

CENTER LINE — YELLOW — 4"/6"*

GORE LINE — WHITE — 6"/12"*

DIAGONAL LINE — YELLOW OR WHITE — 6"

CROSSWALK LINE — WHITE — 6"/24"*

R/R LINE — WHITE — 16"

STOP OR TRANSVERSE BAR — WHITE — 24"

SKIP LINES

10' SKIP LINES — YELLOW OR WHITE

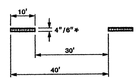

MINI-SKIP LINES

2' MINI-SKIP LINES — YELLOW OR WHITE

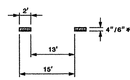

* GENERAL NOTES

1- WHERE TWO WIDTHS ARE INDICATED, THE FIRST WIDTH APPLIES TO A "NORMAL" WIDTH LINE, THE SECOND WIDTH APPLIES TO A "WIDE" LINE.

2- "WIDE" LINES ARE REQUIRED WHEN DESIGNATED IN THE PLANS, OR WHEN DIRECTED BY THE ENGINEER. REFER TO PAVEMENT MARKING GUIDELINES.

STATE OF NORTH CAROLINA DEPT. OF TRANSPORTATION DIVISION OF HIGHWAYS RALEIGH, N.C.

7-08

ENGLISH STANDARD DRAWING FOR **PAVEMENT MARKINGS** LINE TYPES

SHEET 1 OF 2 **1205.01**

STATE OF NORTH CAROLINA DEPT. OF TRANSPORTATION DIVISION OF HIGHWAYS RALEIGH, N.C.

7-08

ENGLISH STANDARD DRAWING FOR **PAVEMENT MARKINGS** TURN LANES

SHEET 1 OF 1 **1205.05**

DIRECT TAPER TURN LANE

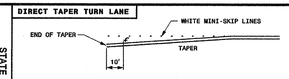

TURN LANE BAYS < 125 FT.

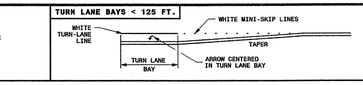

TURN LANE BAYS 125 - 250 FT.

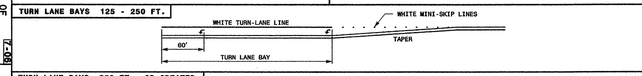

TURN LANE BAYS 250 FT. OR GREATER

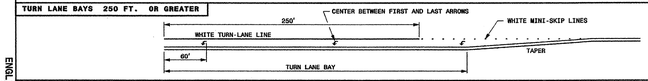

LEFT TURN LANE DEVELOPED FROM 2-WAY TURN LANE

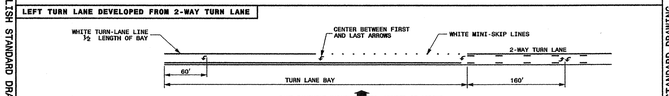

DOUBLE TURN LANES

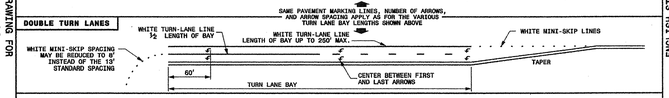

LEGEND

PAVEMENT MARKING SYMBOL

GENERAL NOTES

1- APPLY ALL TURN LANE MARKINGS AS SHOWN FOR RIGHT & LEFT TURN LANES.

2- THE NUMBER OF ARROWS SHOWN IS THE MINIMUM REQUIRED. USE ADDITIONAL ARROWS AS DETERMINED BY THE ENGINEER.

STATE OF NORTH CAROLINA DEPT. OF TRANSPORTATION DIVISION OF HIGHWAYS RALEIGH, N.C.

7-08

ENGLISH STANDARD DRAWING FOR **FRAME, GRATES, AND HOOD** FOR USE ON STANDARD CATCH BASIN

SHEET 1 OF 2 **840.03**

NOTE: USE TYPE "E", "F" AND "G" GRATE UNLESS OTHERWISE NOTED.

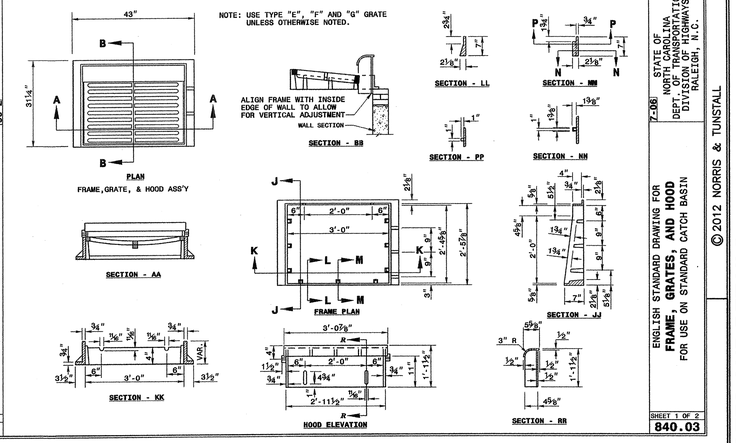

STATE OF NORTH CAROLINA DEPT. OF TRANSPORTATION DIVISION OF HIGHWAYS RALEIGH, N.C.

7-08

ENGLISH STANDARD DRAWING FOR **TRAFFIC BEARING PRECAST DRAINAGE STRUCTURE**

SHEET 1 OF 1 **840.46**

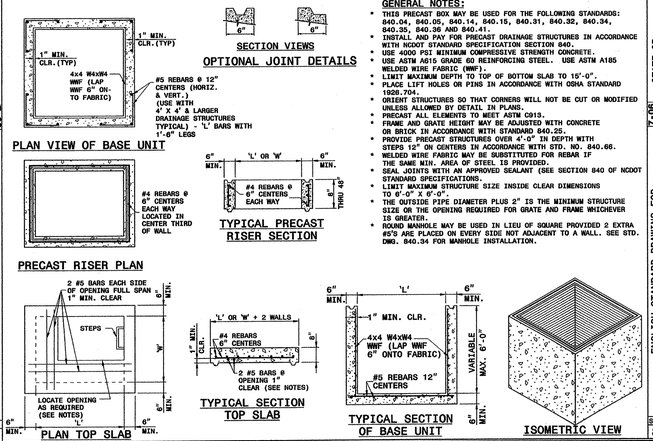

GENERAL NOTES:

- THIS PRECAST BOX MAY BE USED FOR THE FOLLOWING STANDARDS: 840.04, 840.05, 840.14, 840.15, 840.31, 840.32, 840.34, 840.35, 840.36 AND 840.41.
- INSTALL AND PAY FOR PRECAST DRAINAGE STRUCTURES IN ACCORDANCE WITH NCDOT STANDARD SPECIFICATION SECTION 840.
- USE 4000 PSI MINIMUM COMPRESSIVE STRENGTH CONCRETE.
- USE ASTM A615 GRADE 60 REINFORCING STEEL. USE ASTM A185 WELDED WIRE FABRIC (WWF).
- LIMIT MAXIMUM DEPTH TO TOP OF BOTTOM SLAB TO 15'-0".
- PLACE LIFT HOLES OR PINS IN ACCORDANCE WITH OSHA STANDARD 1926.704.
- ORIENT STRUCTURES SO THAT CORNERS WILL NOT BE CUT OR MODIFIED UNLESS ALLOWED BY DETAIL IN PLANS.
- PRECAST ALL ELEMENTS TO MEET ASTM C913.
- FRAME AND GRATE HEIGHT MAY BE ADJUSTED WITH CONCRETE OR BRICK IN ACCORDANCE WITH STANDARD 840.25.
- PROVIDE PRECAST STRUCTURES OVER 4'-0" IN DEPTH WITH STEPS 12" ON CENTERS IN ACCORDANCE WITH STD. NO. 840.66.
- WELDED WIRE FABRIC MAY BE SUBSTITUTED FOR REBAR IF THE SAME MIN. AREA OF STEEL IS PROVIDED.
- SEAL JOINTS WITH AN APPROVED SEALANT (SEE SECTION 840 OF NCDOT STANDARD SPECIFICATIONS.
- LIMIT MAXIMUM STRUCTURE SIZE INSIDE CLEAR DIMENSIONS TO 6'-0" X 6'-0".
- THE OUTSIDE PIPE DIAMETER PLUS 2" IS THE MINIMUM STRUCTURE SIZE OR THE OPENING REQUIRED FOR GRATE AND FRAME WHICHEVER IS GREATER.
- ROUND MANHOLE MAY BE USED IN LIEU OF SQUARE PROVIDED 2 EXTRA #5'S ARE PLACED ON EVERY SIDE NOT ADJACENT TO A WALL. SEE STD. DWG. 840.34 FOR MANHOLE INSTALLATION.

STATE OF NORTH CAROLINA DEPT. OF TRANSPORTATION DIVISION OF HIGHWAYS RALEIGH, N.C.

7-08

ENGLISH STANDARD DRAWING FOR **DROP INLET FRAME AND GRATES** FOR USE WITH STD. DWG.S 840.14 AND 840.15

SHEET 1 OF 1 **840.16**

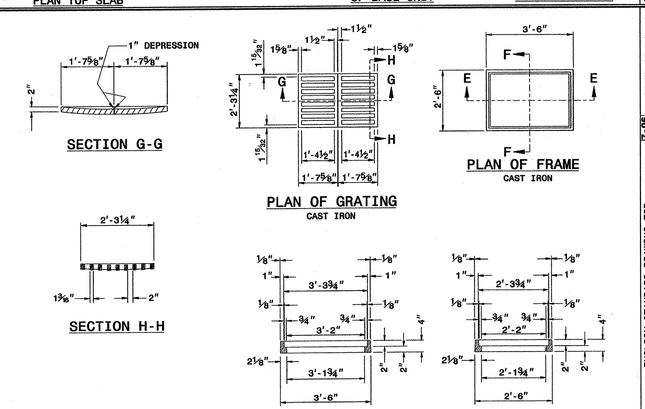

STATE OF NORTH CAROLINA DEPT. OF TRANSPORTATION DIVISION OF HIGHWAYS RALEIGH, N.C.

7-08

ENGLISH STANDARD DRAWING FOR **PAVEMENT MARKINGS** PEDESTRIAN CROSSWALKS

SHEET 1 OF 1 **1205.07**

HI-VISIBILITY CROSSWALK

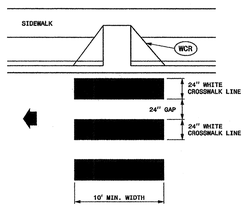

STANDARD CROSSWALK

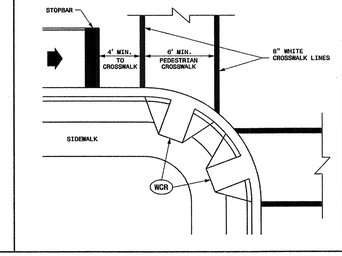

GENERAL NOTES

1- THE MINIMUM WIDTH OF STANDARD CROSSWALKS IS 6 FEET. THE MINIMUM WIDTH OF HI-VISIBILITY CROSSWALKS IS 10 FEET.

2- CENTER CROSSWALKS TO THEIR CORRESPONDING WHEELCHAIR RAMPS, BUT DO NOT SET THEM WITHIN THE INTERSECTION AREA ESTABLISHED BY BISECTING THE INTERSECTION RADII.

3- PLACE STOP BARS A MINIMUM OF 4 FEET FROM NEAREST CROSSWALK LINE, BUT NOT WITHIN THE AREA OF A WHEELCHAIR RAMP. PLACE STOP BARS PARALLEL TO CROSSWALK LINES, BUT CAN BE PLACED PERPENDICULAR TO TRAVEL LANES.

4- COORDINATE PLACEMENT OF CROSSWALKS IN ALL CASES WITH THE LOCATION OF WHEELCHAIR RAMPS. (SEE SIGNAL PLANS).

LEGEND

DIRECTION OF TRAFFIC FLOW

WCR WHEELCHAIR RAMP

STATE OF NORTH CAROLINA DEPT. OF TRANSPORTATION DIVISION OF HIGHWAYS RALEIGH, N.C.

7-08

ENGLISH STANDARD DRAWING FOR **PAVEMENT MARKINGS** PEDESTRIAN CROSSWALKS

SHEET 1 OF 1 **1205.07**

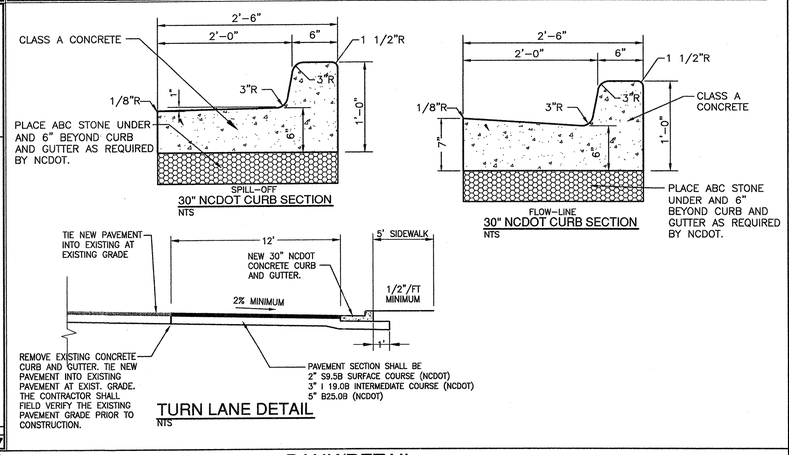

For each open utility cut of City streets, a $325 permit shall be required from the City prior to occupancy and/or project acceptance.

Approved Construction Plan

	Name	Date
Planning	Dawn M. Driffery	11/29/12
Public Utilities	N/A	
Traffic	James Murphy	11/29/12
Fire	Chris Bell	11/29/2012

CITY OF WILMINGTON NORTH CAROLINA
Public Services • Engineering Division
APPROVED DRAINAGE PLAN
Date: 11/29/12 Permit #: 2012033
Signed: [illegible]

NCDENR PWSS WATER PERMIT #: _____
WATER CAPACITY: _____ GPD
DWQ SEWER PERMIT #: _____
SEWER CAPACITY: _____ GPD
SEWER SHED # AND PLANT: _____
SEWER TO FLOW THROUGH NEI: YES or NO (CIRCLE ONE)

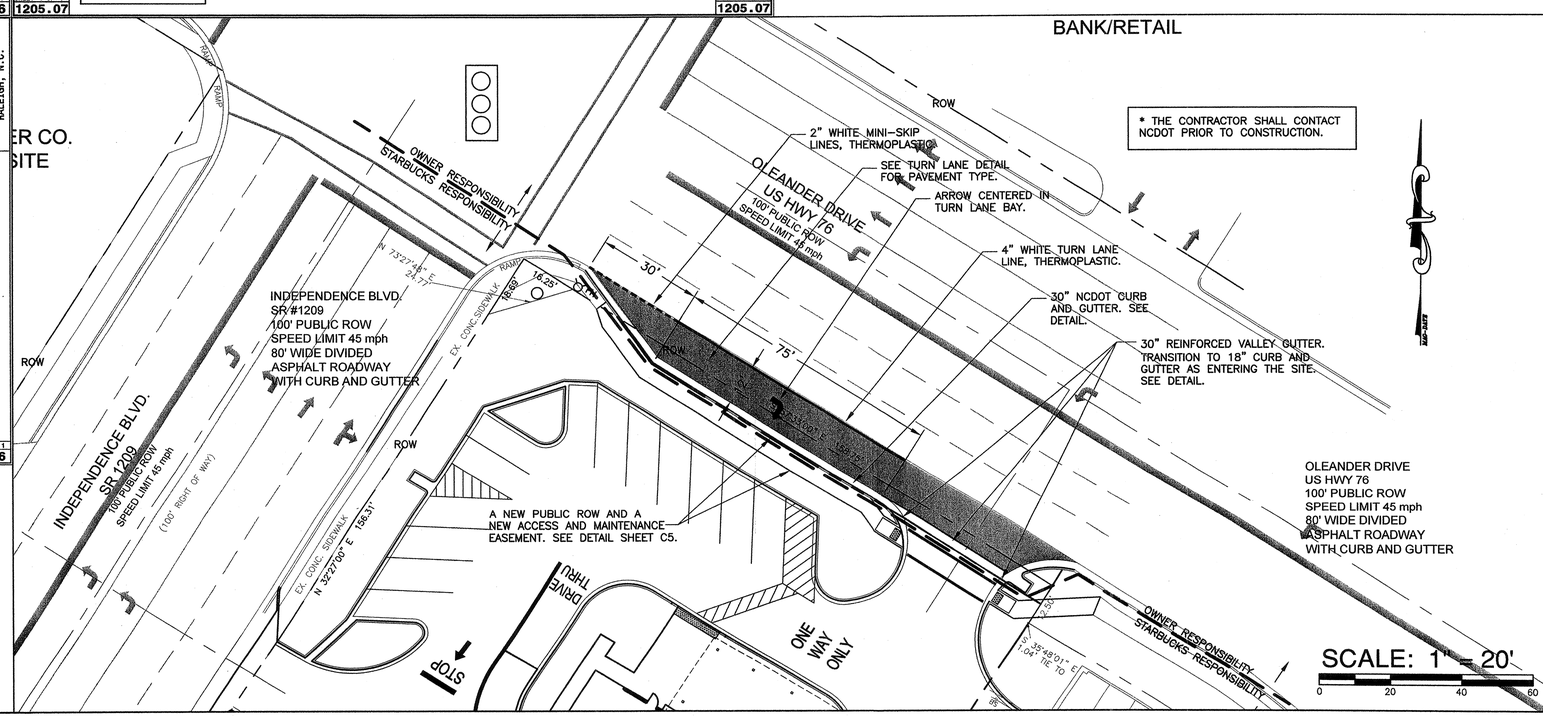

NOTES AND DETAILS

STARBUCKS - STORE #18295
3502 OLEANDER DR.
WILMINGTON, N. C.

©2012 NORRIS & TUNSTALL

OWNER/DEVELOPER
MR. NELSON MACRAE, PRESIDENT
THE OLEANDER COMPANY, INC.
P.O. BOX 3145
WILMINGTON, NC. 28406
910 392-3300
910 392-5123

NORRIS & TUNSTALL
CONSULTING ENGINEERS, INC.
1127 FLORAL PARKWAY
SUITES 300 & 400
WILMINGTON, NC 28403
PHONE (910) 343-9653
FAX (910) 343-9604
office@nkteng.com
licence #C-3641

12040

DES.	JST
CKD.	JPN
DRWN.	NKS
DATE	10/31/12

NORTH CAROLINA PROFESSIONAL SEAL 19851 ENGINEER JOHN S. TUNSTALL

C7

CP 1304

Approved Construction Plan	Name	Date
Planning	Dawn M Bradley	11/09/12
Public Utilities	N/A	
Traffic	[illegible]	11/29/12
Fire	[illegible]	11/20/2012

NCDENR PWSS WATER PERMIT #: _____
WATER CAPACITY: _____ GPD
DWQ SEWER PERMIT #: _____
SEWER CAPACITY: _____ GPD
SEWER SHED # AND PLANT: _____
SEWER TO FLOW THROUGH NEI: YES or NO (CIRCLE ONE)

CITY OF WILMINGTON NORTH CAROLINA
Public Services • Engineering Division
APPROVED DRAINAGE PLAN
Date: 11/29/12 Permit #: 2012033
Signed: [illegible]

For each open utility cut of City streets, a $325 permit shall be required from the City prior to occupancy and/or project acceptance.

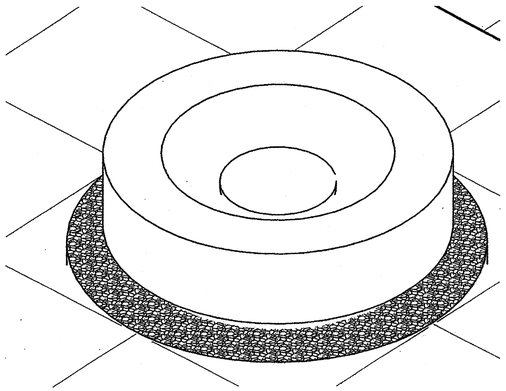

7 Axon @ Fire Pit
Scale:

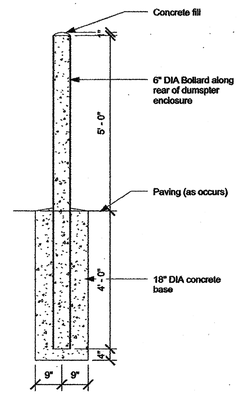

4 Bollard Detail
Scale: 1/2" = 1'-0"

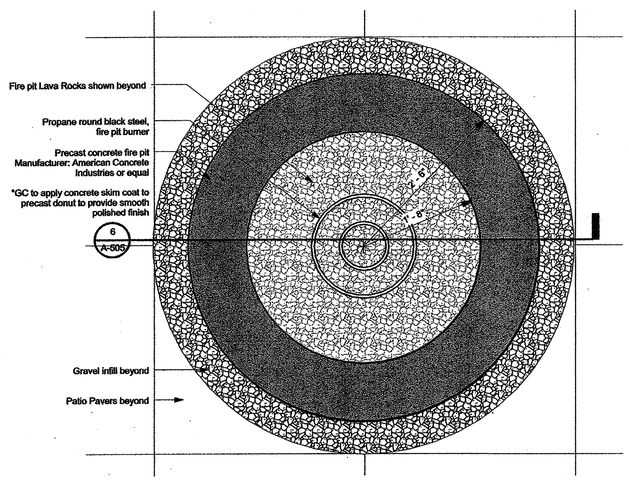

5 Enlarged Plan @ Fire Pit
Scale: 1" = 1'-0"

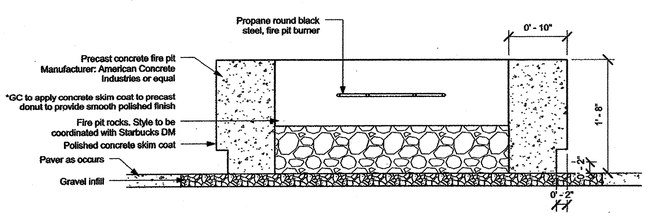

6 Section @ Fire Pit
Scale: 1" = 1'-0"

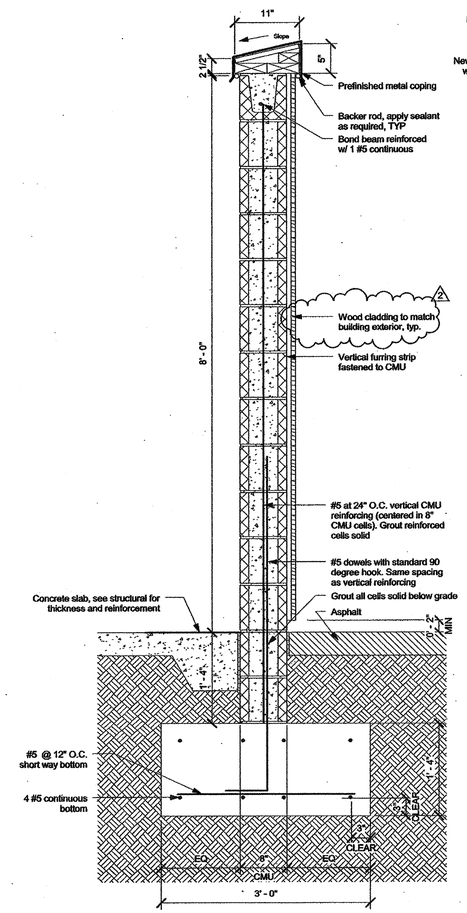

3 Trash Enclosure Section Detail
Scale: 1" = 1'-0"

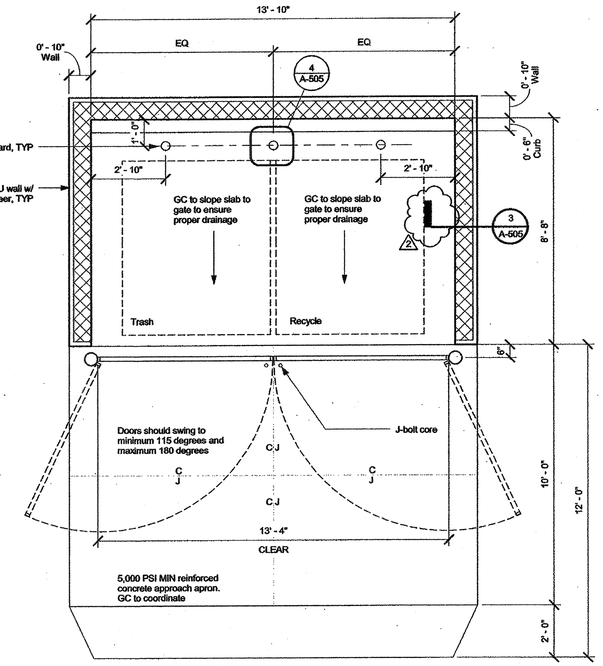

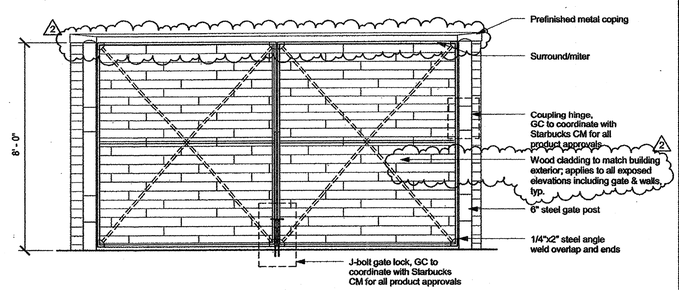

2 Trash Enclosure Details
Scale: 3/8" = 1'-0"

Issued For Construction

©2011 Starbucks Coffee Company

Starbucks Coffee Company
2401 Utah Avenue South
Seattle, Washington 98134
(206) 318-1575

These Drawings and Specifications are confidential and shall remain the sole property of Starbucks Corporation. They shall not be reproduced (in whole or in part), shared with third parties or used in any manner on other projects or extensions to this project without the prior written consent of Starbucks Corporation. These drawings and specifications are intended to express Design Intent for a prototypical Starbucks store (which is subject to change at anytime) and do not reflect actual site conditions. Neither party shall have any obligation nor liability to the other (except as stated above) until a written agreement is fully executed by both parties.

Architect of Record
Gensler
Gensler Project #: 13.7664.000

Date and Issue Description			
Rev	Date	By	Description
A	07/27/12	JR	Client Review Progress
B	08/13/12	JR	Client Review Set
C	09/14/12	JR	Issued for Bid
	09/18/12	JR	Issued for Permit
1	11/13/12	JBJ	Permit Comments & Client Coordination
2	11/19/12	JBJ	City of Wilmington Comments

STEPHEN T. SWICEGOOD
LICENSED ARCHITECT
NORTH CAROLINA
ATLANTA, GEORGIA

Project Name:
OLEANDER & INDEPENDENCE
Project Address:
3502 OLEANDER DRIVE
WILMINGTON, NC 28403

Store #: 18295
Project #: 36025-001
Concept: NCS
Palette: REGIONAL MODERN
Issue Date: 11.13.2012
Design Manager: C. HOGUE
LEED® AP: M. Garcia Urtiaga
Production Designer: GENSLER
Checked by: C. HOGUE

Sheet Title:
Site Details
Scale: As indicated

Sheet Number:
A-505

S:\13.7664.000\BIM\Building Model_User Model Files\Justin Jones_SBUX_Independence & Oleander_13.7664.000.rvt
11/19/2012 2:49:58 PM

CP 1304

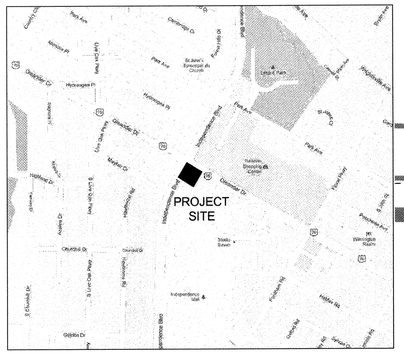

VICINITY MAP

SCALE: 1" = 1000'

GENERAL NOTES:

1. All planted and retained living material, required to meet provisions of the city of Wilmington's landscape requirements shall be perpetually protected and maintained to professionally accepted standards by joint and several responsibility of the owner, occupant, tenant, and respective agents of the property on which the material is located. Maintenance of trees on non-residential property shall be performed by a professional that has signified that they are knowledgeable of both ANSI standards and the OSHA standards for tree pruning, removal, and safety and that they are insured against potential damages. Any planted material that becomes damaged or diseased or dies, or is improperly maintained shall be replaced by the owner within sixty (60) days of the occurrence of such condition.
2. Areas within the triangular sight distance shall be maintained free of all obstructions between 30" and 10'.
3. A rain/freezer sensor shall be used if there an irrigation system used on the site.

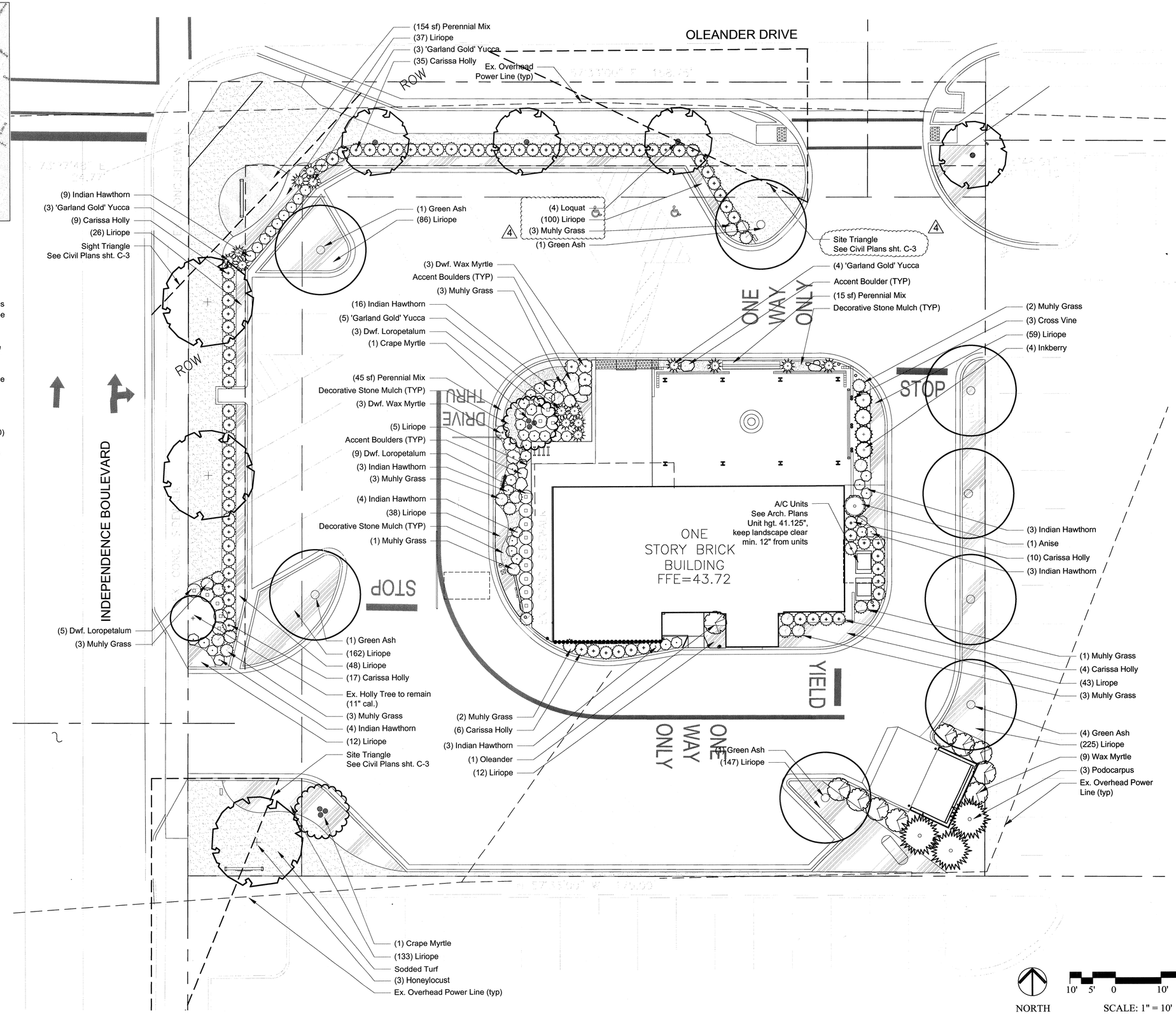

CITY OF WILMINGTON NORTH CAROLINA
Public Services • Engineering Division
APPROVED DRAINAGE PLAN
Date: 11/29/12 Permit # 2012033
Signed:

For each open utility cut of City streets, a $325 permit shall be required from the City prior to occupancy and/or project acceptance.

Approved Construction Plan	Name	Date
Planning	Dawn M. Bradley	11/29/12
Public Utilities	N/A	
Traffic	James Murphy	11/29/12
Fire		11/29/12

Date: Nov 27, 2012, 2:31pm User ID: Gray Kiser Laptop
File: K:\2012\2012010 - Starbucks Wilmington\dwg\Starbucks - Wilmington - current.dwg

RAA DESIGN, LLC
Landscape Architects / Land Planners
1835 Savoy Drive, Suite 107
Atlanta, Georgia 30341
Phone (404)452-2200
Fax (404)420-2798
Email raa@raa-design.com

REVISIONS
09.18.12 - Issued For Permit
11.07.12 - Rev. per City Comments
11.20.12 - Rev. per City Comments
11.26.12 - Rev. per City Comments
11.27.12 - Rev. per City Comments

NORTH CAROLINA REGISTERED LANDSCAPE ARCHITECT No. 1697 11/27/2012 RAY MYERS
SEAL

LANDSCAPE PLAN

Issued For Construction

STARBUCKS
3502 OLEANDER DRIVE
WILMINGTON, N.C.

DATE	09-18-12
JOB NO.	2012010
SCALE	1" = 10'-0"
DRAWN BY	GK
CHKD BY	RM

DISCLAIMER
THIS DRAWING IS THE PROPERTY OF R A A DESIGN AND MAY NOT BE REPRODUCED WITHOUT WRITTEN CONSENT
RAA DESIGN

SHEET
LS-1
1 OF 3

CP 1304

GENERAL NOTES:

1. Do not allow air pockets to form when backfilling.
2. Immediately soak with water.
3. Do not break rootball.

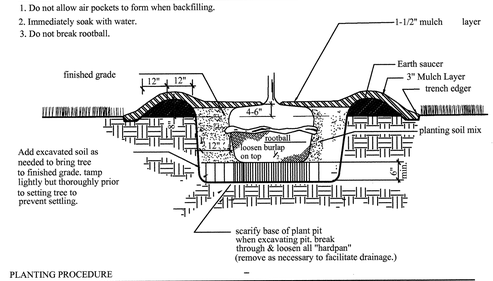

PLANTING PROCEDURE

1. excavate rootball pit.
2. add excavated soil & tamp. set tree such that top of rootball is 2-3" higher than finished grade.
3. backfill w/ soil mix & "water in".
4. stake & guy securely.
5. complete backfilling, construct trench edge & add specified mulch.

TYP. TREE ROOTBALL PIT

N.T.S.

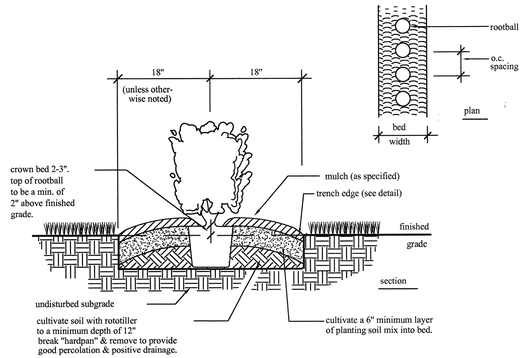

HEDGE PLANTING (SINGLE ROW)

N.T.S.

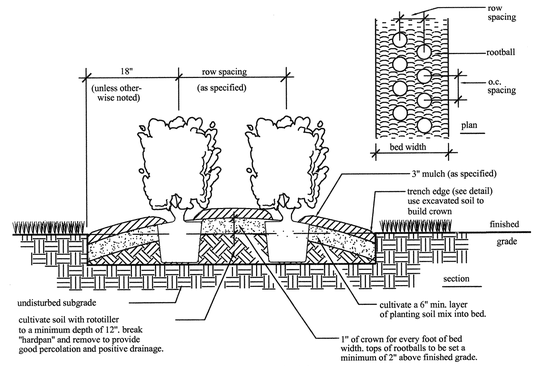

HEDGE PLANTING (DOUBLE ROW)

N.T.S.

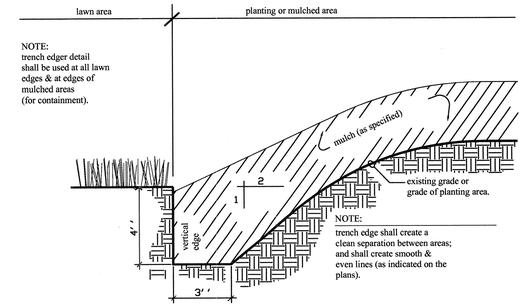

NOTE:
trench edge shall create a clean separation between areas; and shall create smooth & even lines (as indicated on the plans).

TRENCH EDGER

N.T.S.

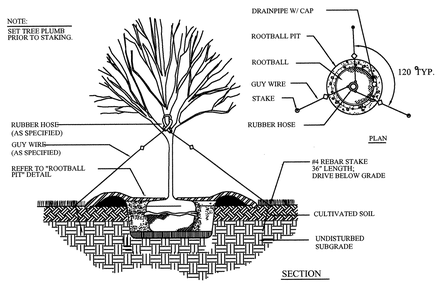

TREE STAKING & GUYING

N.T.S.

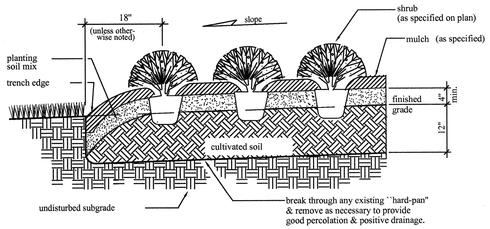

PLANTING PROCEDURE

1. lay out bed and outline with trench edge. place soil from edge within bed.
2. rototill bed to 12" depth. spread 4" min. layer of planting soil mix over bed. rototill soil mix into top of bed. install plants & mulch. water thoroughly.

SHRUB PLANTING

N.T.S.

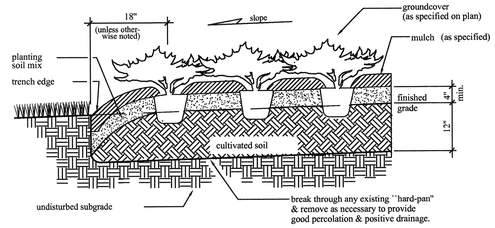

PLANTING PROCEDURE

1. lay out bed and outline with trench edge. place soil from edge within bed.
2. rototill bed to 12" depth. spread 4" min. layer of planting soil mix over bed. rototill soil mix into top of bed. install plants & mulch. water thoroughly.

GROUNDCOVER PLANTING

N.T.S.

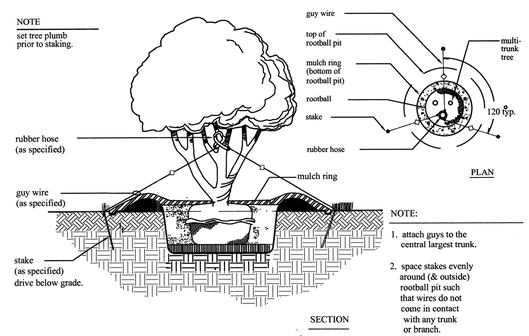

NOTE:

1. attach guys to the central largest trunk.
2. space stakes evenly around (& outside) rootball pit such that wires do not come in contact with any trunk or branch.

MULTI-TRUNK TREE STAKING

N.T.S.

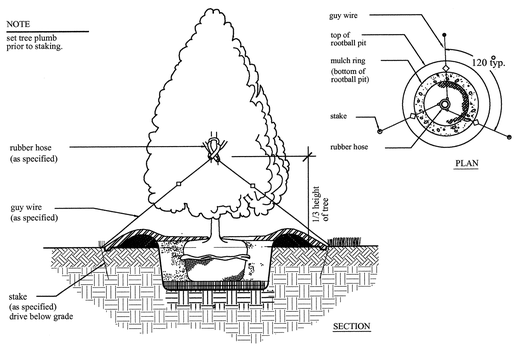

EVERGREEN TREE STAKING

N.T.S.

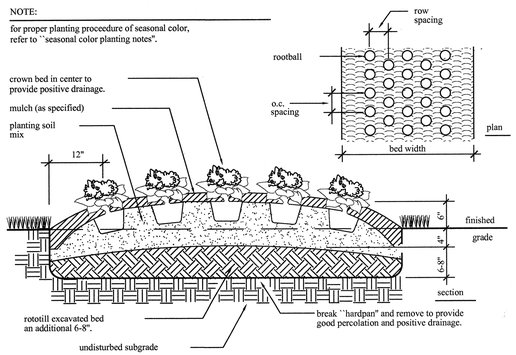

SEASONAL COLOR BED

N.T.S.

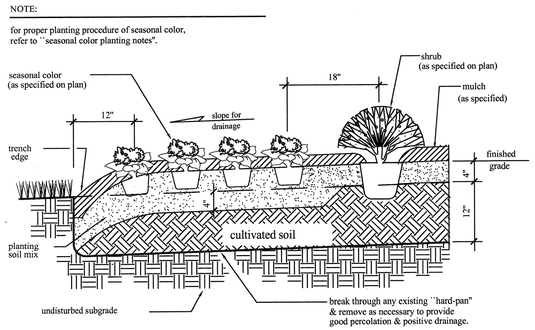

SEASONAL COLOR BED (FRONTING SHRUB BED)

N.T.S.

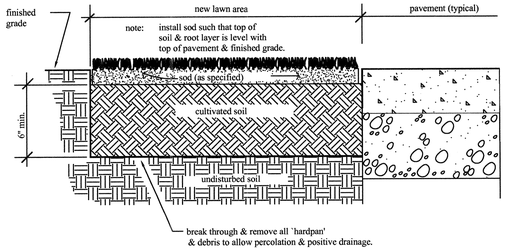

SODDING PROCEDURE

1. the general contractor will provide grades to (+/- .20) of a foot of proposed grades.
2. cultivate entire area to a minimum 6" depth. handrake smooth.
3. add additives (as per soil test analysis) & rototill.
4. water area to be sodded prior to laying sod.
5. lay & roll sod. water thoroughly.

SOD INSTALLATION

N.T.S.

For each open utility cut of City streets, a $325 permit shall be required from the City prior to occupancy and/or project acceptance.

CITY OF WILMINGTON NORTH CAROLINA
Public Services • Engineering Division
APPROVED DRAINAGE PLAN
Date: 11/29/12 Permit # 2012033
Signed:

Approved Construction Plan

	Name	Date
Planning	Dawn M. Breitkopf	11/29/12
Public Utilities	N/A	
Traffic	Travis Murphy	11/29/12
Fire		11/29/2012

Date: Nov 27, 2012, 2:32pm User ID: Gray Kiser Laptop
File: K:\2012\2012010 - Starbucks Wilmington\dwg\Starbucks - Wilmington - current.dwg

RAA DESIGN, LLC
Landscape Architects / Land Planners
1835 Savoy Drive, Suite 107
Atlanta, Georgia 30341
Phone (404)352-2200
Fax (404)420-2798
Email raa@raa-design.com

REVISIONS

09.18.12 - Issued For Permit
11.07.12 - Rev. per City Comments
11.20.12 - Rev. per City Comments
11.26.12 - Rev. per City Comments
11.27.12 - Rev. per City Comments

NORTH CAROLINA LANDSCAPE ARCHITECT No. 1607 11/27/2012 RAY MYERS

SEAL

LANDSCAPE DETAILS

Issued For Construction

STARBUCKS
3502 OLEANDER DRIVE
WILMINGTON, N.C.

DATE	09-18-12
JOB NO.	2012010
SCALE	NTS
DRAWN BY	GK
CHKD BY	RM

DISCLAIMER
THIS DRAWING IS THE PROPERTY OF RAA DESIGN AND MAY NOT BE REPRODUCED WITHOUT WRITTEN CONSENT
RAA DESIGN

SHEET
LS-2
2 OF 3

CP 1304

GENERAL PLANTING NOTES

1. All plants must be healthy, vigorous material, free of pests and disease.
2. All plants must be container-grown or balled and burlapped (B&B) as indicated in the plant list.
3. All trees must be straight trunked, full headed and meet all requirements as specified.
4. All plants are subject to the approval of the Landscape Architect and the Owner before, during, and after installation.
5. All trees must be guyed or staked as shown in the details.
6. All plants and planting areas must be completely mulched as specified.
7. Prior to construction, the Landscape Contractor shall be responsible for locating all underground utilities and shall avoid damage to all utilities during the course of work. The Landscape Contractor is responsible for repairing any and all damage to utilities, structures, site appurtenances, etc. which occurs as a result of the landscape construction.
8. The Landscape Contractor is responsible for verifying all quantities shown on these plans before pricing the work.
9. The Landscape Contractor is responsible for fully maintaining all planting (including, but not limited to: watering, spraying, mulching, fertilizing, etc.) of planting areas and lawns until the work is accepted in total by the Landscape Architect and the Owner.
10. The Landscape Contractor shall completely guarantee all plant material for a period of one (1) year beginning at the date of final acceptance. The Landscape Contractor shall promptly make all replacements before or at the end of the guarantee period (as per direction of the Owner).
11. The Owner agrees to perform all landscape maintenance (including watering) throughout the one year guarantee period unless otherwise determined.
12. The Landscape Architect will approve the staked location of all plant material prior to installation.
13. After being dug at the nursery source, all trees in leaf shall be acclimate for two (2) weeks under a mist system prior to installation.
14. Any plant material which dies, turns brown, or defoliates (prior to total acceptance of work) shall be promptly removed from the site and replaced with material of the same species, quantity, size and meeting all plant list specifications.
15. Standards set forth in 'American Standards for Nursery Stock' represent guideline specifications only, and constitute a minimum quality requirements for plant material.

PLANTING SOIL MIX NOTES

1 Landscape Contractor shall supply all planting soil. Planting soil shall be mixed and stored on site.
2. Landscape Contractor shall furnish (from his source) a good, clean, dark, loamy, topsoil. Topsoil must be approved by the Landscape Architect.
3. The planting soil mix must be approved Landscape Architect prior to any backfilling.
4. The planting soil mix shall consist of the following for trees, shrubs and groundcovers:
   - 50% topsoil
   - 50% prepared additives (by volume as follows)
     - 3 parts humus
     - 1 part sterilized cow manure
     - commercia fertilizer at 4 lbs./cu. yd.
     - lime (as recommended in soil analysis)

SEASONAL COLOR PLANTING NOTES

1 Excavate seasonal color bed to depth of 4". Remove existing soil from site. Break through hardpan and remove all stone, roots, debris, etc. Rototill excavated bed an additional 6-8" depth.
2. Slope the base of the seasonal color bed to the trench edge
3. Prepare planting soil mix consisting of topsoil and the following soil amendments per 50 sq. ft.:
   - 50 lbs. composted cow manure
   - 200 lbs. humus
   - 100 lbs. pine bark mulch (fingernailed size, ¼" max.), or mini nuggets
   - 3 c.f. Nature's Helper
   - 200 lbs. sand (decrease quantity of topsoil has large amounts of existing sand)
   - 5 lbs. lime (adjust for alkaline soils)
4. Add 6" of planting soil to excavated bed and rototill into existing soil
5. Place additional planting soil mix to raise entire bed 6" above finished grade. If seasonal bed fronts a shrub or groundcover bed, match that bed's height (4" above finished grade) and continue positive drainage toward trench edge.
6. Rototill entire bed to depth of 12"+/-
7. Evenly spread fertilizer appropriate to variety of seasonal color at a maximum rate of 2.5 lbs. per 100 sq. ft. and rake into top 3" of soil.
8. Plant seasonal color as specified and at indicated spacing shown on plans.
9. Edge seasonal color bed and mulch as specified.
10. Water thoroughly

CITY OF WILMINGTON NORTH CAROLINA
Public Services • Engineering Division
APPROVED DRAINAGE PLAN
Date: 11/29/12 Permit # 2012033
Signed:

For each open utility cut of City streets, a $325 permit shall be required from the City prior to occupancy and/or project acceptance.

Approved Construction Plan

	Name	Date
Planning	Dawn M. Toffenetti	11/29/12
Public Utilities	N/A	
Traffic	Ray Murphy	11/29/12
Fire		11/28/2012

Trees

Qty.	Sym.	Botanical Name	Common Name	Size	Spacing	Hgt.	Width	Root	Notes
4		Eriobotrya japonica	Bronze Loquat	3" cal.	as shown	7-8'	5-6'	cont.	Hand tagged - three equal canes, min.
8		Fraxinus pennsylvanica	Green Ash	3" cal.	as shown	10-12'	6-7'	cont.	Hand tagged
3		Gleditsia triocanthus var. inernis	Honeylocust	3" cal.	as shown	10-12'	6-7'	cont.	Hand tagged
3		Podocarpus macrophyllus var. maki	Podocarpus	15 gal	as shown	7'	4'	cont.	Hand tagged
2		Lagerstroemia x Natchez	Crape Myrtle	2" cal	as shown	8'	8'	cont.	Hand tagged - three equal canes, min.

Shrubs

	Qty.	Sym.	Botanical Name	Common Name	Size	Spacing	Hgt.	Width	Root	Notes
4	81		Ilex cornuta 'Carissa'	Carissa Holly	3 gal.	3' o.c.	3'	4'	cont.	Hand tagged
	4		Ilex glabra 'Shamrock'	Inkberry	3 gal.	3' o.c.	3'	3'	cont.	Hand tagged
	1		Illicium parviflorum	Anise	7 gal.	5' o.c.	8'	8'	cont.	Hand tagged
4	17		Loropetalum chinense var. rubrum 'Blush'	Loropetalum	3 gal.	3' o.c.	3'	3'	cont.	Hand tagged
	6		Myrica cerifera var. pumila	Dwarf Wax Myrtle	3 gal.	3' o.c.	2'	2'	cont.	Hand tagged
	9		Myrica cerifera	Wax Myrtle	5 gal.	4' o.c.	4'	4'	cont.	Hand tagged
	1		Nerium oleander	Oleander	5 gal.	4' o.c.	4'	4'	cont.	Hand tagged
4	45		Rhaphiolepsis indica	Indian Hawthorn	3 gal.	3' o.c.	2'	2'	cont.	Hand tagged
4	15		Yucca filamentosa 'Garland Gold'	Yucca	3 gal.	3' o.c.	2'	2'	cont.	Hand tagged

Ornamental Grass

	Qty.	Sym.	Botanical Name	Common Name	Size	Spacing	Hgt.	Width	Root	Notes
4	24		Muhlenbergia capillaris	Pink Muhly Grass	3 gal.	3' o.c.	2'	2'	cont.	Hand tagged

Vines

Qty.	Sym.	Botanical Name	Common Name	Size	Spacing	Hgt.	Width	Root	Notes
3		Bignonia capreolata	Cross Vine	1 gal.	as shown			cont.	Train to wall

Groundcover

	Qty.	Sym.	Botanical Name	Common Name	Size	Spacing	Hgt.	Width	Root	Notes
4	911		Liriope muscari	Liriope	4" pot	18" o.c.			cont.	Hand tagged

Perennials

Qty.	Sym.	Botanical Name	Common Name	Size	Spacing	Hgt.	Width	Root	Notes
214 sf		Perennial Mix A		4" pot	18" o.c.			cont.	Equal ratio of plant mix, plant in natural plant groupings
		Artemesia absinthium	Artemesia						
		Baptisia australis	Blue Wild Indigo						
		Corepsis verticillata	Threadleaf Coreopsis						
		Gaillardia x grandiflora	Blanket Flower						
		Lavandula angustifolia	Lavender						
		Rudbeckia fulgida	Black Eyed Susan						
		Salvia leucantha	Velvet Sage						

Groundcover

Qty.	Sym.	Botanical Name	Common Name	Size	Spacing	Hgt.	Width	Root	Notes
			Bermuda Sod						
			Zoysia Sod						

RAA DESIGN, LLC
Landscape Architects / Land Planners
1835 Savoy Drive, Suite 107
Atlanta, Georgia 30341
Phone (404)355-2200
Fax (404)420-2798
Email raa@raa-design.com

REVISIONS
09.18.12 - Issued For Permit
11.07.12 - Rev. per City Comments
11.20.12 - Rev. per City Comments
11.26.12 - Rev. per City Comments
11.27.12 - Rev. per City Comments

NORTH CAROLINA REGISTERED LANDSCAPE ARCHITECT No. 1607 RAY MYERS 11/27/2012
SEAL

LANDSCAPE NOTES

Issued For Construction

STARBUCKS
3502 OLEANDER DRIVE
WILMINGTON, N.C.

DATE	09-18-12
JOB NO.	202000
SCALE	NTS
DRAWN BY	GK
CHKD BY	RM

DISCLAIMER
THIS DRAWING IS THE PROPERTY OF R A A DESIGN AND MAY NOT BE REPRODUCED WITHOUT WRITTEN CONSENT
RAA DESIGN

SHEET
LS-3
3 OF 3

CP 1304

Date: Nov 27, 2012, 2:32pm User ID: Gray Kiser Layout
File: K:\2012\2012010 - Starbucks Wilmington\dwg\Starbucks - Wilmington - current.dwg