LOCATION MAP

NOT TO SCALE

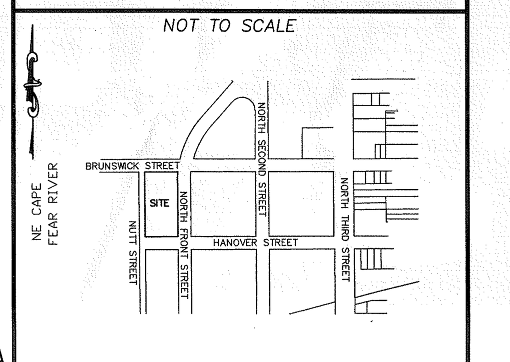

STREETYARD & LANDSCAPING NOTES:

251 – (24+30) = 197 FT OF FRONTAGE ALONG FRONT STREET
197 / 30 = 6.5 TREES REQUIRED TO BE PLANTED ALONG FRONT STREET.

167 FT OF FRONTAGE ALONG BRUNSWICK STREET
167 / 30 = 6 TREES REQUIRED TO BE PLANTED ALONG BRUNSWICK STREET.

167 FT OF FRONTAGE ALONG HANOVER STREET
167 / 30 = 6 TREES REQUIRED TO BE PLANTED ALONG HANOVER STREET.

1. THREE (3) INCH MINIMUM CALIPER WIDTH FOR TREES
2. ALL PROPOSED VEGETATION WITHIN THE SIGHT TRIANGLES SHALL NOT INTERFERE WITH CLEAR VISUAL SIGHT LINES FROM 30' – 10'.
3. UTILITY METERS, TRANSFORMERS AND FIXED TRASH DISPOSAL RECEPTACLESWHICH CANNOT BE LOCATED OUT OF SIGHT SHALL BE SCREENED.

WATER & SEWER USAGE NOTES:

CURRENT WATER USAGE 0 GPD — PROPOSED WATER USAGE 15,000 GPD
CURRENT SEWER USAGE 0 GPD — PROPOSED SEWER USAGE 15,000 GPD
* DETERMINED BY 125 ROOMS X 120 GAL ROOM

FIRE & LIFE SAFETY NOTES:

1. LANDSCAPING OR PARKING CANNOT BLOCK OR IMPEDE FIRE HYDRANTS OR FDC'S. A 3FT CLEAR SPACE SHALL BE MAINTAINED AROUND THE CIRCUMFERENCE OF THE HYDRANT.
2. CONTRACTOR SHALL MAINTAIN AN ALL WEATHER ACCESS FOR EMERGENCY VEHICLES AT ALL TIMES DURING CONSTRUCTION.
3. UNDERGROUND FIRE LINE MUST BE PERMITTED AND INSPECTED BY THE CITY OF WILMINGTON FIRE DEPARTMENT FROM THE PUBLIC RIGHT OF WAY TO THE BUILDING. CONTACT THE WILMINGTON FIRE DEPARTMENT DIVISION OF FIRE AND LIFE SAFETY AT 910-343-0696 FOR ADDITIONAL INFORMATION.
4. FIRE INSPECTOR MUST WITNESS THE HYDROSTATIC TESTING. MINIMUM TESTING TIME IS 30 MIN.
5. A 24 HOUR MINIMUM NOTIFICATION IS NEEDED PRIOR TO ANY OF THE ABOVE TEST(s) OR INSPECTIONS BEING PERFORMED.
6. FDC CONNECTIONS CAN BE NO FURTHER THAN 40 FT FROM FIRE VEHICLE ACCESS.
7. FDC CONNECTIONS CAN BE NO FURTHER THAN 150 T FROM A FIRE HYDRANT.
8. NEWLY INSTALLED FIRE HYDRANTS MUST BE OPERATIONAL PRIOR TO COMBUSTIBLE CONSTRUCTION MATERIALS BEING BROUGHT ONSITE

UTILITY NOTES:

1. PROJECT SHALL COMPLY WITH THE CITY OF WILMINGTON AND CFPUA CROSS CONNECTION CONTROL REQUIREMENTS. WATER METER(S) CANNOT BE SET AND ACTIVATED ON NEW MAINS UNTIL ALL REQUIREMENTS ARE MET. CALL 343-3910 FOR INFORMATION.
2. IF THE CONTRACTOR DESIRES WATER FOR CONSTRUCTION HE/SHE SHALL APPLY IN ADVANCE FOR THIS SERVICE AND MUST PROVIDE A REDUCED PRESSURE ZONE (RPZ) BACKFLOW PREVENTION DEVICE ON THE DEVELOPER'S SIDE OF THE WATER METER BOX.
3. ALL COMMERCIAL WATER SERVICES AND ANY IRRIGATION SYSTEMS SUPPLIED BY CFPUA WATER SHALL HAVE A BACKFLOW PREVENTION DEVICE ACCEPTABLE TO THE CFPUA AND APPROVED BY USCFCCCHR OR ASSE. CALL 799-6064 FOR INFORMATION.
4. WHEN PVC WATER MAINS AND/OR POLYETHYLENE SERVICES ARE PROPOSED, THE PIPES ARE TO BE MARKED WITH NO. 10 INSULATED COPPER WIRE INSTALLED THE ENTIRE LENGTH AND STRAPPED TO THE PIPES WITH DUCT TAPE. THE INSULATED WIRE IS TO BE STRIPPED TO BARE WIRE AND SECURED TO ALL VALVES AND FITTINGS. THE WIRE IS TO BE ACCESSIBLE AT ALL FIRE HYDRANTS AND WATER METER BOXES TO AID IN FUTURE LOCATION OF FACILITIES.
5. 36"MINIMUM COVER OVER ALL WATER MAINS.
6. ANY SEPARATE CONNECTION FOR IRRIGATION SHALL COMPLY WITH CITY AND CFPUA CROSS-CONNECTION REQUIREMENTS WITH APPROVED BACKFLOW PREVENTION DEVICES.
7. AT LOCATIONS WHERE WATER MAIN CROSSES UNDER STORM SEWER, A MINIMUM OF 24" VERTICAL SEPARATION SHALL BE PROVIDED.
8. WATER SERVICES CAN NOT BE ACTIVATED ON NEW WATER MAINS UNTIL ENGINEER'S CERTIFICATION AND APPLICANT'S APPLICANT'S CERTIFICATION HAVE BEEN PROVIDED TO NCDENR AND "FINAL APPROVAL" ISSUED.

TRAFFIC ENGINEERING NOTES:

1. A LANDSCAPING PLAN INDICATING THE LOCATION OF REQUIRED STREET TREES SHALL BE SUBMITTED TO THE CITY OF WILMINGTON TRAFFIC ENGINEERING DIVISION AND PARKS AND RECREATION DEPARTMENT FOR REVIEW AND APPROVAL PRIOR TO RECORDING OF THE FINAL PLAT. PLAN SHALL ADHERE SD 15-17.
2. TRAFFIC CONTROL DEVICES (INCLUDING SIGNS AND PAVEMENT PARKINGS) IN AREAS OPEN TO PUBLIC TRAFFIC ARE TO MEET MUTCD STANDARDS.
3. OPEN CUT NOTES:
   A. A UTILITY CUT PERMIT IS REQUIRED FOR EACH OPEN CUT OF A CITY STREET. CONTACT 910-341-5888 FOR MORE DETAILS.
   B. CONTRACTOR TO COORDINATE WITH CITY OF WILMINGTON FOR ACCEPTABLE HOURS OF CONSTRUCTION AND TRAFFIC CONTROL DURING INSTALLATION OF UTILITIES IN CITY ROADS.
   C. SUITABLE COMPACTION AND APPROVED STONE & BASE COURSES TO BE INSTALLED IN PLACE OF OPEN CUT.
   D. OPEN CUT TO BE SAW CUT.
4. ALL PAVEMENT MARKINGS IN PUBLIC RIGHTS OF WAY AND FOR DRIVEWAYS ARE TO BE THERMOPLASTIC AND MET CITY AND/OR NCDOT STANDARDS.
5. IT SHALL BE THE RESPONSIBILITY OF THE SUBDIVIDER TO ERECT OFFICIAL STREET NAME SIGNS AT ALL INTERSECTIONS ASSOCIATED WITH THE SUBDIVISION IN ACCORDANCE WITH THE TECHNICAL STANDARDS AND SPECIFICATIONS MANUAL. THE SUBDIVIDER MAY ACQUIRE AND ERECT OFFICAL STREET NAME SIGNS OR MAY CHOOSE TO CONTRACT WITH THE CITY TO INSTALL THE STREET SIGNS AND THE SUBDIVIDER SHALL PAY THE COST OF SUCH INSTALLATION. CONTACT TRAFFIC ENGINEERING AT 341-7888 TO DISCUSS INSTALLATION OF TRAFFIC AND AND STREET NAME SIGNS. PROPOSED STREET NAMES MUST BE APPROVED PRIOR TO INSTALLATION OF STREET NAME SIGNS.
6. CALL TRAFFIC ENGINEERING AT 341-7888 FORTY-EIGHT HOURS PRIOR TO ANY EXCAVATION IN THE RIGHT OF WAY.
7. CONTACT KAREN DIXON AT 341-7888 TO DISCUSS STREET LIGHTING OPTIONS.
8. TACTILE WARNING MATS ARE TO BE INSTALLED ON ALL WHEELCHAIR RAMPS.
9. ANY BROKEN OR MISSING SIDEWALK PANELS AND CURBING WILL BE REPLACED.
10. ALL TRAFFIC CONTROL SIGNS AND MARKINGS OFF THE RIGHT OF WAY ARE TO BE MAINTAINED BY THE PROPERTY OWNER IN ACCORDANCE WITH MUTCD STANDARDS.
11. ALL PARKING STALL MARKINGS AND LANE ARROWS WITHIN THE PARKING AREA SHALL BE WHITE.
12. INSTALL REFLECTORS PER CITY AND NCDOT STANDARDS. TRAFFIC ENGINEERING MUST APPROVE OF PAVEMENT MARKINGS LAYOUT PRIOR TO ACTUAL STRIPING.
13. CONTACT TOM PLATT WITH TRAFFIC ENGINEERING AT 341-7888 TO ENSURE THAT ALL TRAFFIC SIGNAL FACILITIES AND EQUIPMENT ARE SHOWN ON PLAN.

ENVIRONMENTAL NOTES:

1. NO LAND DISTURBANCE IS PERMITTED OUTSIDE THE DESIGNATED LIMITS OF DISTURBANCE FOR SITE IMPROVEMENTS OTHER THAN WHAT IS NECESSARY TO TIE INTO EXISTING CONTOURS OR MEET LANDSCAPING REQUIREMENTS.
2. CONTAMINATED SOILS REGARDED IN BROWNSFIELD AGREEMENT TO BE DISPOSED OF PER OWNER'S WASTE MANAGEMENT PLAN.

LEGEND

EXISTING BOUNDARY	EXISTING / PROPOSED STORM SEWER & CATCH BASIN
CENTERLINE OF RIGHT OF WAY	E.I.P. EXIST. IRON PIPE
CONTOUR LINE & ELEVATION	WATER METER SERVICE CONNECTION
SS EXISTING SANITARY SEWER & MANHOLE	E.C.M. EXIST. CONCRETE MONUMENT
W EXISTING WATERLINE	HANDICAP RAMP
PROP STREETYARD	40.9 EL EX. ELEV. & DESCRIPTION
	PROP BUILDING FOOTPRINT

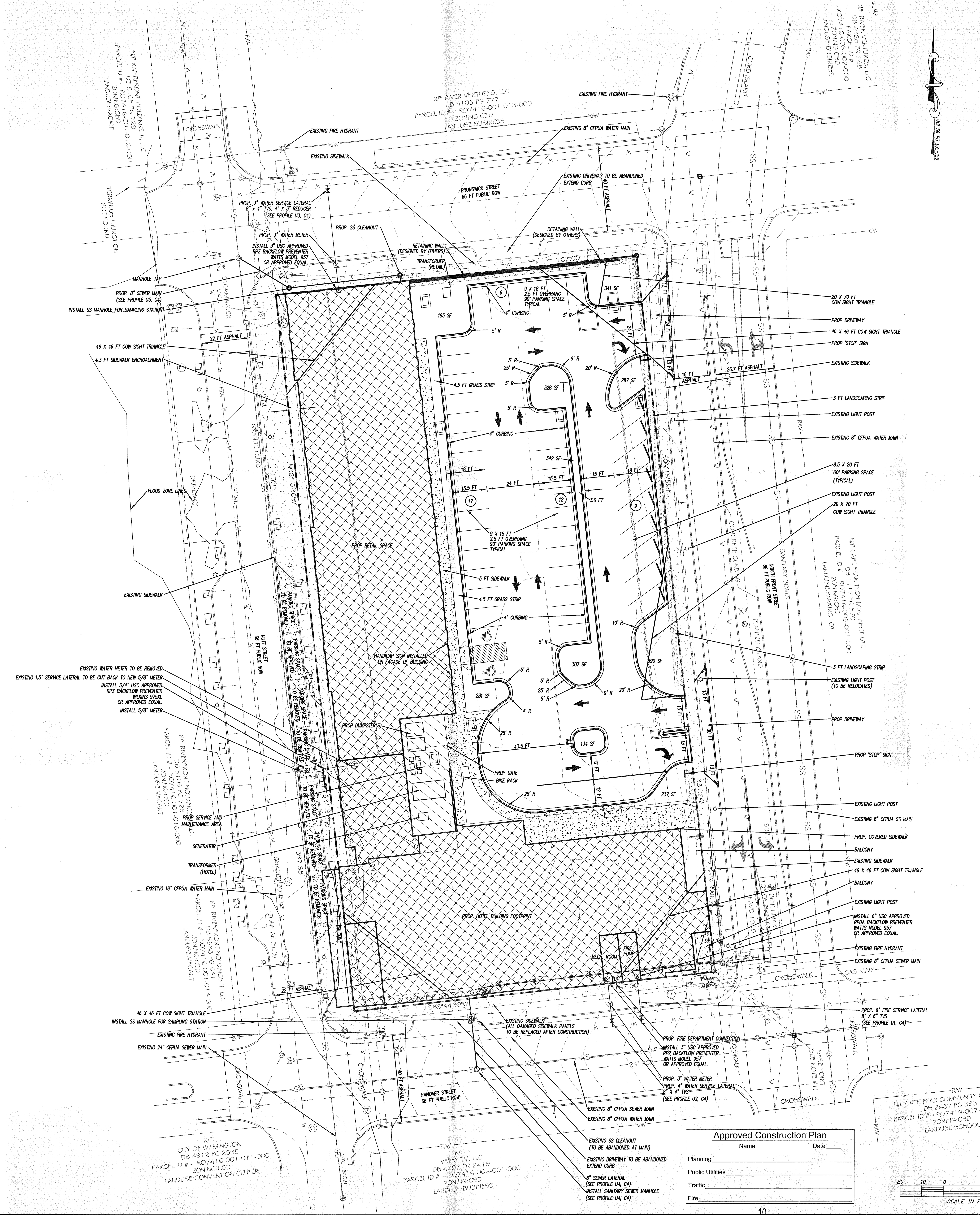

SITE & BUILDING DATA:

TOTAL LOT AREA = 55,330 SF (1.27 AC.)
PROPERTY ADDRESS IS 1 HANOVER STREET
PID = R04716-005-001-000

EXISTING DATA:
EXISTING BUILDINGS ON SITE = N/A
EXISTING PARKING = 7,070 SF
EXISTING FOUNDATIONS = 29,926 SF
EXISTING SIDEWALK = 1,428 SF
38,424 SF / 55,330 SF
EXISTING 69.4% IMPERVIOUS (69% USED)

PROPOSED / EXISTING IMPERVIOUS DATA:
PROPOSED PARKING AREA: 19,837 SF
*PROPOSED BUILDING AREA: 25,847 SF
PROPOSED SIDEWALK AREA: 2,819 SF
EXISTING SIDEWALK AREA: 1,314 SF
PROPOSED DRIVEWAY: 485 SF
TOTAL IMPERVIOUS AREA: 50,302 SF (1.15 AC)
*DOESN'T INCLUDE PORTION OF BUILDING AND BALCONY THAT'S LOCATED OVER THE EXISTING SIDEWALK ON NUTT STREET.
50,275 SF / 55,330 SF = 0.909 OR 91% IMPERVIOUS
PROPOSED 91% IMPERVIOUS

PROPOSED IMPERVIOUS TO BE TREATED:
PROPOSED PARKING AREA: 19,837 SF
*PROPOSED BUILDING AREA: 25,847 SF
PROPOSED SIDEWALK AREA: 2,807 SF
TOTAL IMPERVIOUS AREA: 48,491 SF (1.11 AC)
*DOESN'T INCLUDE PORTION OF BUILDING AND BALCONY THAT'S LOCATED OVER THE EXISTING SIDEWALK ON NUTT STREET.

BUILDING DATA:
PROPOSED CONSTRUCTION TYPE = 1B
NUMBER OF ROOMS = 125
GROSS BUILDING AREA
PROPOSED HOTEL AREA = 12,657 (INCLUDES BALCONIES EXCEPT OVER NUTT STREET)
NUMBER OF FLOORS = 10

LOWER LEVEL LOBBY	7,272
1ST FLOOR LOBBY	11,258
2ND FLOOR	11,497
3RD FLOOR	11,364
4TH FLOOR	11,407
5TH FLOOR	11,451
6TH FLOOR	11,494
7TH FLOOR	11,537
8TH FLOOR	11,580
9TH FLOOR	11,623
TOTAL	110,753 SF

PROPOSED RETAIL AREA = 13,190 SF SHOWN
NUMBER OF FLOORS = 2

1ST FLOOR	12,900
2ND FLOOR	13,040
TOTAL	25,940 SF

PROPOSED BUILDING AREA: 25,847 SF
LOT COVERAGE: 25,847 SF / 55,330 SF = 0.467
PROPOSED 47% BUILDING LOT COVERAGE

BUILDING SETBACKS:

REQUIRED SETBACKS	PROPOSED SETBACKS
FRONT SETBACK: 0 FT	FRONT SETBACK: 0 FT
SIDE SETBACKS: 0 FT	SIDE SETBACKS: 0 FT, 0 FT
REAR SETBACK: 0 FT	REAR SETBACK: 0 FT

BUILDING HEIGHT =

PROP. BLDG HEIGHT @ NUTT STREET LEVEL	PROP. BLDG HEIGHT @ NORTH FRONT STREET LEVEL
HOTEL = 121'-0"	HOTEL = 107'-0"
RETAIL = 34'-0"	RETAIL = 20'-0"

GENERAL NOTES:

1. NEW HANOVER COUNTY PARCEL NUMBERS: 4716-005-001-000
2. TOTAL TRACT AREA: 55,330 s.f. (1.27 ac.±)
3. EXISTING ZONING DISTRICT: CBD
4. LAND CLASSIFICATION: DEVELOPED
5. THIS SITE IS LOCATED IN ZONES X AND "SHADED" X AS TO THE FEDERAL EMERGENCY MANAGEMENT AGENCY'S FLOOD INSURANCE RATE MAP, COMMUNITY-PANEL NUMBER 3720311800 K, DATED: 6/2/06.
6. SITE ADDRESS IS 1 HANOVER STREET
7. EXISTING IMPERVIOUS ONSITE = 38,424 SF
8. ASBUILT, BOUNDARY AND TOPOGRAPHIC SURVEY PERFORMED AND PROVIDED TO COASTAL SITE DESIGN, PC BY PATRICK C. BRISTOW LAND SURVEYING, PC
9. STORMWATER DRAINS TO CAPE FEAR RIVER, SC 18-71
10. SITE IS UNDER OLD LAND DEVELOPMENT CODE

PARKING NOTES:

1. NO PARKING REQUIRED IN CBD ZONING
   MINIMUM PARKING REQUIRED; 0 SPACES; TOTAL PROVIDED; 44 SPACES
2. NO LOADING SPACES REQUIRED IN CBD ZONING
   MINIMUM LOADING SPACES REQUIRED; 0 SPACES; TOTAL PROVIDED; 0 SPACES
3. WHEEL STOPS MUST BE PLACED PER CITY OF WILMINGTON STANDARD DETAIL SD15-13.
4. 2 HANDICAP SPACES REQUIRED; 2 HANDICAP SPACES PROVIDED

DEVELOPMENT NOTES:

1. ALL SIGNS AND PAVEMENT MARKINGS IN AREAS OPEN TO PUBLIC TRAFFIC ARE TO MEET MUTCD STANDARDS.
2. THE CONTRACTOR IS RESPONSIBLE FOR THE LOCATION AND PROTECTION OF EXISTING UTILITIES DURING CONSTRUCTION. CALL U-LOCO AT 1-800-632-4949. CONTRACTOR IS RESPONSIBLE FOR THE REPAIR AND REPLACEMENT OF ANY UTILITIES, CURB AND GUTTER, SIDEWALK PANELS, PAVEMENT, ETC...THAT MAY BE DAMAGED DURING CONSTRUCTION. DAMAGED ITEMS SHALL BE REPAIRED TO AT LEAST THE QUALITY OR WORKMANSHIP FOUND IN THE ORIGINAL ITEM.
3. SOLID WASTE DISPOSAL WILL BE DUMPSTER SERVICE.
4. ALL DEVELOPMENT SHALL BE IN ACCORDANCE WITH THE CITY OF WILMINGTON ZONING ORDINANCE & SUBDIVISION REGULATIONS.
5. APPROVAL OF SITE PLAN DOES NOT CONSTITUTE APPROVAL OF PROPOSED SIGNAGE FOR THIS SITE. A SEPARATE SIGN PERMIT MUST BE OBTAINED.
6. APPLICABLE STREET FRONTAGES SHALL HAVE NATURAL VEGETATIVE SCREENING MEETING CITY REQUIREMENTS.
7. THE DEVELOPMENT SHALL COMPLY WITH ALL CITY TECHNICAL STANDARDS AND DEVELOPMENT REGULATIONS.
8. HVAC EQUIPMENT SHALL BE PLACED IN THE INTERIOR YARDS AND SCREENED FROM THE RIGHT-OF-WAY. THE UNITS WILL BE SCREENED FROM PUBLIC VIEW FROM ALL SIDES OF THE BUILDING.
9. NO IRRIGATION CURRENTLY SPECIFIED, IF SO DESIRED THE IRRIGATION CONTROL MODULE MUST BE OUTFITTED W/ A RAIN SENSOR.
10. SITE LIGHTING TO BE DESIGNED BY OTHERS.

STORMWATER MANAGEMENT PLAN
APPROVED
CITY OF WILMINGTON
ENGINEERING DEPARTMENT
DATE ________ PERMIT # ________
SIGNED________

For each open utility cut of City streets, a $325 permit shall be required from the City prior to occupancy and/or project acceptance.

Approved Construction Plan

	Name	Date
Planning		
Public Utilities		
Traffic		
Fire		

SCALE IN FEET: 1"= 20'

CJMW
ARCHITECTURE
119 Brookstown Ave, Suite 100
Winston-Salem, NC 27101
p. 336.724.1503
www.cjmw.com

CSD
LICENSE # C-2710
COASTAL SITE DESIGN, PC
ENGINEERING
LAND PLANNING
COMMERCIAL / RESIDENTIAL
P.O. Box 4041
Wilmington, NC 28406
(910) 791-4441

RECEIVED
NOV - 1 2012
ENGINEERING

DESIGN DEVELOPMENT
NOT FOR CONSTRUCTION

FINAL DESIGN
NOT RELEASED
FOR CONSTRUCTION

revisions

hotel INDIGO
Wilmington, NC

Copyright 2012
CJMW Architecture, P.A.

CIVIL - SITE PLAN

sheet
C.3

date: August 31, 2012
commission: 12-0040
drawn by: RLW

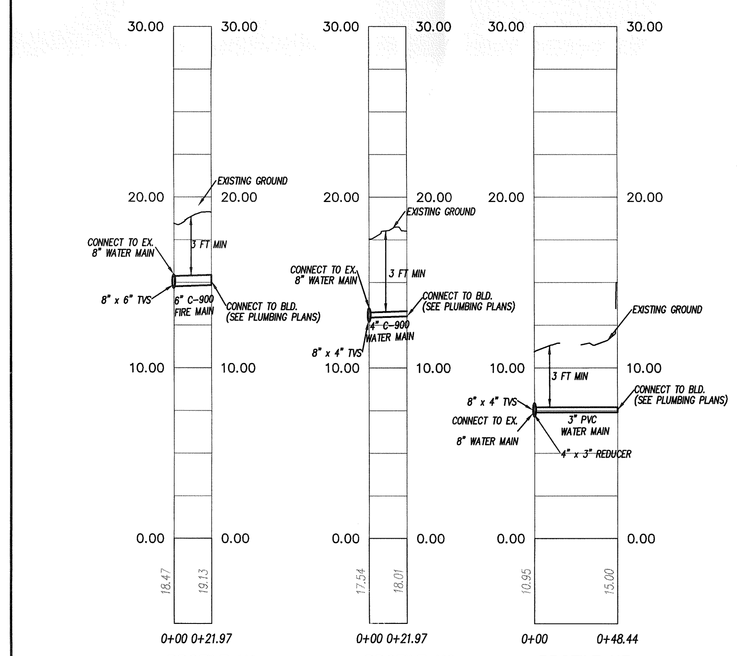

PROFILE U1

PROFILE U2

PROFILE U3

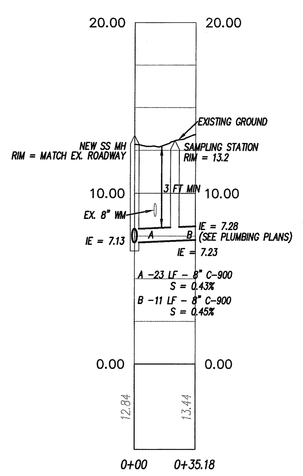

PROFILE U4

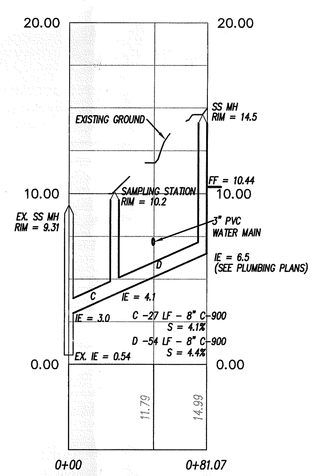

PROFILE U5

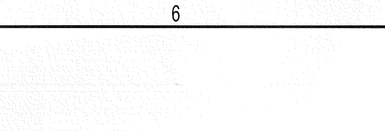

UTILITY PROFILES

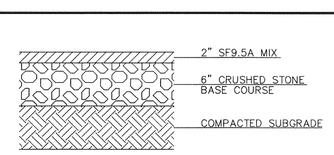

BITUMINOUS CONCRETE PAVEMENT
(NTS)

onsite only

give copy of new Proposed SD

- pavement for Public Streets in this area is 3" + 8"
- Add pavement Restoration detail

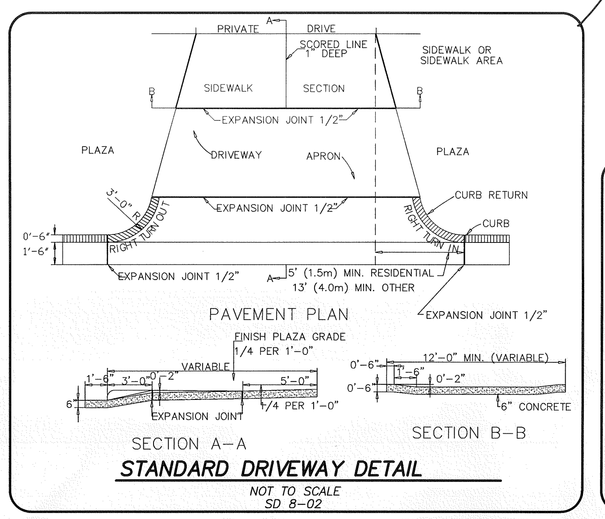

STANDARD DRIVEWAY DETAIL
NOT TO SCALE
SD 8-02

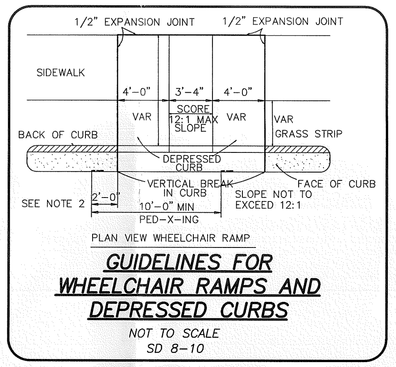

GUIDELINES FOR WHEELCHAIR RAMPS AND DEPRESSED CURBS
NOT TO SCALE
SD 8-10

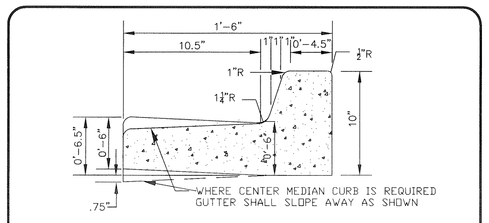

4" CURBING
NOT TO SCALE

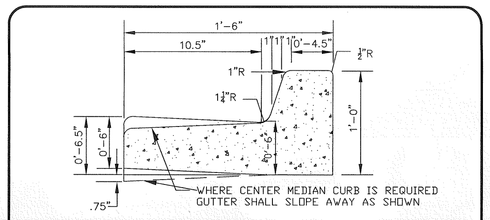

STANDARD CURB SECTION TYPE "A"
SD 7-01
NOT TO SCALE

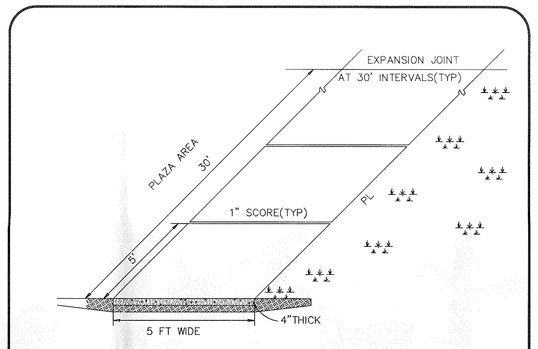

STANDARD SIDEWALK DETAIL
NTS
SD8-15

STORMWATER MANAGEMENT PLAN
APPROVED
CITY OF WILMINGTON
ENGINEERING DEPARTMENT
DATE _____ PERMIT # _____
SIGNED_____

For each open utility cut of City streets, a $325 permit shall be required from the City prior to occupancy and/or project acceptance.

Approved Construction Plan
Name _____ Date ____
Planning_____
Public Utilities_____
Traffic_____
Fire_____

CJMW
ARCHITECTURE
119 Brookstown Ave, Suite 100
Winston-Salem, NC 27101
p. 336.724.1503
www.cjmw.com

CSD
LICENSE # C-2710
COASTAL SITE DESIGN, PC
ENGINEERING
LAND PLANNING
COMMERCIAL / RESIDENTIAL
P.O. Box 4041
Wilmington, NC 28406
(910) 791-4441

DESIGN DEVELOPMENT NOT FOR CONSTRUCTION

FINAL DESIGN NOT RELEASED FOR CONSTRUCTION

revisions

hotel INDIGO
Wilmington, NC

Copyright 2012
CJMW Architecture, P.A.

CIVIL - SITE DETAILS

sheet

C.4

date: August 31, 2012
commission: 12-0040
drawn by: RLW

3/14/2012 - 9:07 AM
\\cjmw01\Jobs\Bim 11\12-0040 Hotel Indigo Wilmington

LOCATION MAP

NOT TO SCALE

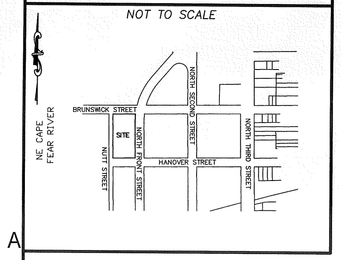

NOTE WELL:

1. SOIL STABILIZATION SHALL BE ACHIEVED ON ANY AREA OF A SITE WHERE LAND ACTIVITIES HAVE TEMPORARILY CEASED ACCORDING TO THE FOLLOWING SCHEDULE:
   i) ALL PERIMETER DIKES, SWALES, PERIMETER SLOPES AND ALL SLOPES STEEPER THAN 3:1 SHALL BE PROVIDED TEMPORARY OR PERMANENT STABILIZATION WITH GROUND COVER AS SOON AS PRACTICABLE BUT IN ANY EVENT WITHIN 7 CALENDAR DAYS FROM LAST LAND-DISTURBING ACTIVITY.
   ii) ALL OTHER DISTURBED AREAS SHALL BE PROVIDED TEMPORARY OR PERMANENT STABILIZATION WITH GROUND COVER AS SOON AS PRACTICABLE BUT IN ANY EVENT WITHIN 14 CALENDAR DAYS FROM LAST LAND-DISTURBING ACTIVITY.
2. DENUDED AREAS MUST BE STABILIZED WITHIN FIFTEEN (15) WORKING DAYS OF CEASE OF ANY PHASE OF ACTIVITY. ALL SLOPES MUST BE STABILIZED WITHIN TWENTY-ONE (21) CALENDAR DAYS OF CEASE OF ANY PHASE OF ACTIVITY. THIS INCLUDES SLOPES, SWALES, CHANNELS AND STOOPPLES.
3. THIS PLAN TO BE UTILIZED AND REVIEWED ONLY IN CONJUNCTION WITH THE WRITTEN NARRATIVE, WHICH IS AN INTEGRAL PART OF THIS EROSION AND SEDIMENT CONTROL PLAN.
4. ALL SLOPES SHALL BE 3:1 OR FLATTER.
5. ALL ROOF DRAINS TO BE DIRECTED TO STORM DRAINAGE SYSTEM.
6. NO WETLANDS EXIST ON SITE.
7. BOUNDARY SURVEY PERFORMED BY PATRICK BRISTOW
8. TOPOGRAPHIC SURVEY PERFORMED BY PATRICK BRISTOW

CONSTRUCTION SCHEDULE –

1. OBTAIN APPROVAL OF PLAN AND ANY NECESSARY PERMITS, AND HOLD A PRE-CONSTRUCTION CONFERENCE PRIOR TO COMMENCING ANY WORK.
2. FLAG WORK LIMITS AND STAKE-OUT PARKING LOT AND STORM DRAINAGE STRUCTURES FOR PRELIMINARY GRADING.
3. INSTALL PHASE I GRAVEL CONSTRUCTION ENTRANCES.
4. INSTALL SILT FENCING PRIOR TO CLEARING AND GRUBBING.
5. PERFORM EXCAVATION NECESSARY TO CONSTRUCT RETAINING WALLS AND INSTALL NECESSARY FILL MATERIAL.
6. ROUGH GRADE THE REMAINING SITE AND ANY STOCKPILING OF MATERIAL AND TOPSOIL NECESSARY.
7. INSTALL PHASE II GRAVEL CONSTRUCTION ENTRANCE, UTILITIES, ESTABLISH FINAL PARKING LOT GRADES AND STABILIZE WITH STONE BASE COURSE.
8. FINAL GRADE, INSTALL NON-MUNICIPAL UTILITIES AS NEEDED, AND VEGETATIVELY STABILIZE AREAS WHERE BUILDING CONSTRUCTION IS NOT IMMINENT.
9. ALL EROSION AND SEDIMENT CONTROL PRACTICES ARE TO BE INSPECTED WEEKLY AND AFTER ANY RAINFALL, AND REPAIRED AS NECESSARY.
10. UPON COMPLETION OF CONSTRUCTION, GRAVEL CONSTRUCTION ENTRANCE IS TO BE REMOVED AND ALL PARKING AREAS ARE TO BE PAVED AND ALL AREAS PERMANENTLY VEGETATIVELY STABILIZED.

MAINTENANCE PLAN –

1. ALL MEASURES TO BE INSPECTED WEEKLY AND AFTER ANY RAINFALL AND INLET PROTECTION TO BE REPAIRED AS NEEDED TO MAINTAIN A BARRIER.
2. SEDIMENT TO BE REMOVED FROM BEHIND ANY SILT FENCE AND INLET PROTECTION DEVICES WHEN IT BECOMES 0.5' DEEP. FENCING EVENT AND NEEDED REPAIRS MADE IMMEDIATELY.
3. ALL SODDED AREAS SHALL BE FERTILIZED, MULCHED, AND RE-SODDED AS NECESSARY, ACCORDING TO SPECIFICATIONS PROVIDED, TO MAINTAIN A SUITABLE VEGETATIVE COVER.
4. CONSTRUCTION ENTRANCE TO BE MAINTAINED IN SUCH A MANNER AS TO PREVENT MUD OR SEDIMENT FROM LEAVING THE CONSTRUCTION SITE. PERIODIC TOPDRESSING WITH 2-INCH STONE MAY BE REQUIRED. INSPECT AFTER EACH RAINFALL AND IMMEDIATELY REMOVE ALL OBJECTIONABLE MATERIALS SPILLED, WASHED, OR TRACKED ONTO PUBLIC ROADWAYS.
5. INSPECT INLET PROTECTION FABRIC BARRIERS AFTER EACH RAIN AND MAKE REPAIRS AS NEEDED.

VEGETATIVE PLAN –

1. PERMANENT VEGETATION TO BE ESTABLISHED IN ACCORDANCE WITH "NORTH CAROLINA EROSION AND SEDIMENT CONTROL PLANNING AND DESIGN MANUAL", SECTION 6.11, LATEST VERSION. SEE SHEET C1.

PLANNED EROSION AND SEDIMENT CONTROL PRACTICES –

(CE) 1. TEMPORARY GRAVEL CONSTRUCTION ENTRANCE
Practice 6.06
SHALL BE INSTALLED AT THE ENTRANCES TO THE PROJECT FROM AN EXISTING ROADWAY. DRAINAGE SHOULD BE AWAY FROM THE ROAD AND EROSION WILL BE CONTROLLED WITH DOWNSTREAM PRACTICES. DURING WET WEATHER IT MAY BE NECESSARY TO WASH TRUCK TIRES AT THESE LOCATIONS.

2. LAND GRADING
Practice 6.02
GRADING SHOULD BE LIMITED TO AREAS AS SHOWN ON THE PLANS. CUT AND FILL SLOPES SHALL BE 3:1 OR FLATTER EXCEPT WHERE SPECIFICALLY INDICATED. CARE SHALL BE TAKEN DURING LAND GRADING ACTIVITIES NOT TO DAMAGE EXISTING TREES THAT ARE IDENTIFIED AS "TO BE PRESERVED".

(SF) 3. SEDIMENT FENCE
Practice 6.62
SEDIMENT FENCING SHOULD BE INSTALLED AS SHOWN ON THE PLAN, TO DELINEATE AND PROTECT WETLANDS AND SPECIFIED AREAS, AND AROUND ANY TEMPORARY STOCKPILE AREAS AS NECESSARY. TO PREVENT ANY GRADED INTERIOR AREAS FROM ERODING ONTO ADJACENT LANDS OR ROADWAY, OR INTO INLETS, OR AS DIRECTED BY ENGINEER OR NEW HANOVER COUNTY EROSION CONTROL PERSONNEL.

(IP) 4. INLET PROTECTION
Practice 6.52
STORM SEWER INLET BARRIERS OF SILT FENCING OR BLOCK AND GRAVEL INLET PROTECTION ARE TO BE CONSTRUCTED TO HELP PREVENT SEDIMENT FROM ENTERING THE STORM SEWER SYSTEM.

KEY

- TC – TOP OF CURB
- GL – GUTTER LINE
- FS – FINISHED SURFACE
- TSW – TOP OF SIDEWALK
- BSW – BOTTOM OF SIDEWALK
- HP – HIGH POINT
- TG – TOP OF GRATE
- TB – TOP OF BOX (ACCESS COVER)
- EXISTING / PROPOSED STORM SEWER & CATCH BASIN
- 21 CONTOUR LINE & ELEVATION
- PROP BUILDING FOOTPRINT
- CONSTRUCTION ENTRANCE
- SILT FENCING

GRADING NOTES:

1. CONTRACTOR TO MAKE SMOOTH TRANSITION FROM INVERTED CROWN TO SHEET FLOW IN DESIGNATED AREAS
2. CONTRACTOR TO ENSURE POSITIVE DRAINAGE IN ALL FINISHED AREAS.
3. ALL BUILDING ROOF DRAINS MUST BE DIRECTED INTO THE STORM DRAINAGE COLLECTION SYSTEM OR INTO THE PARKING LOT.

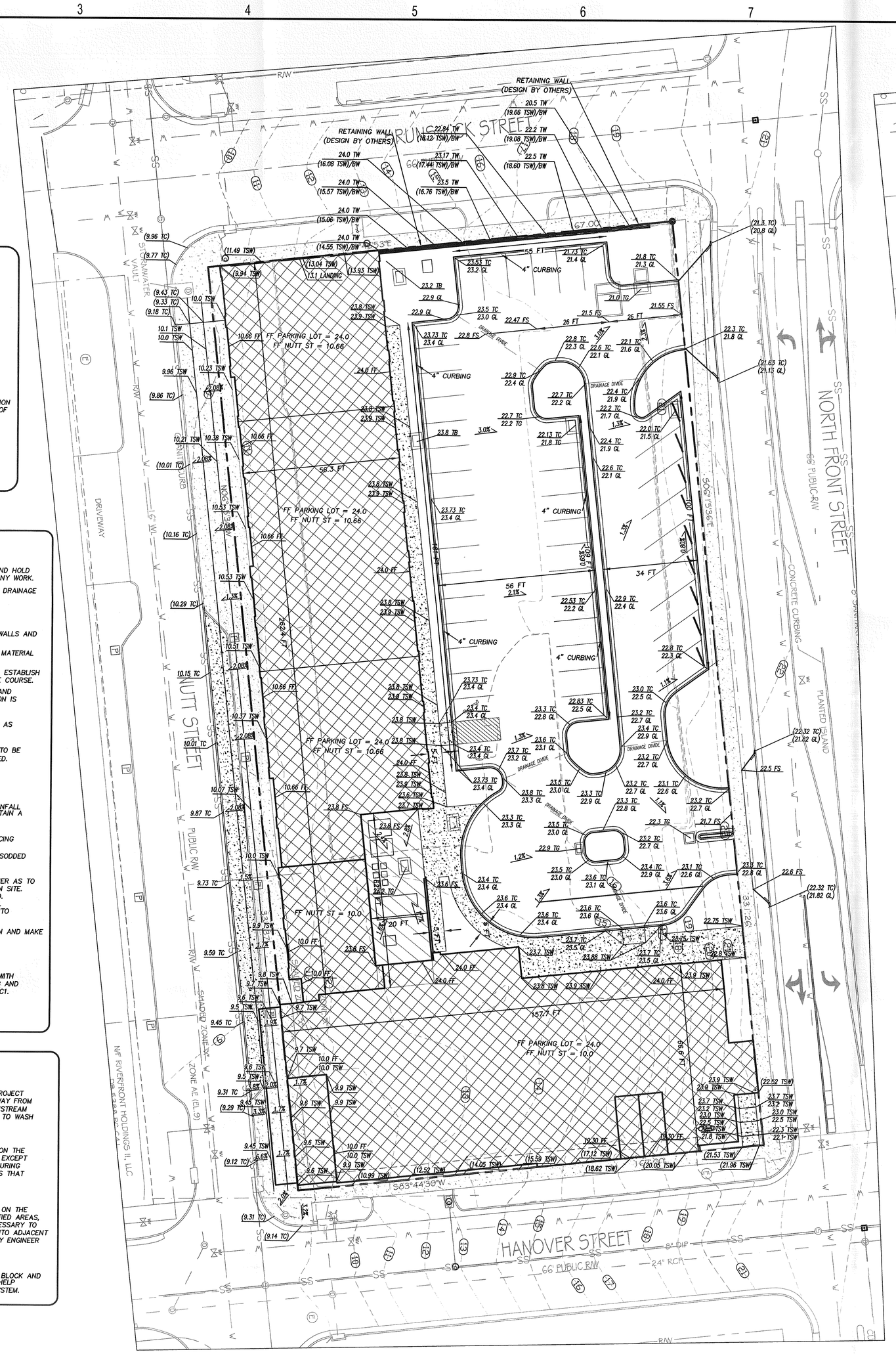

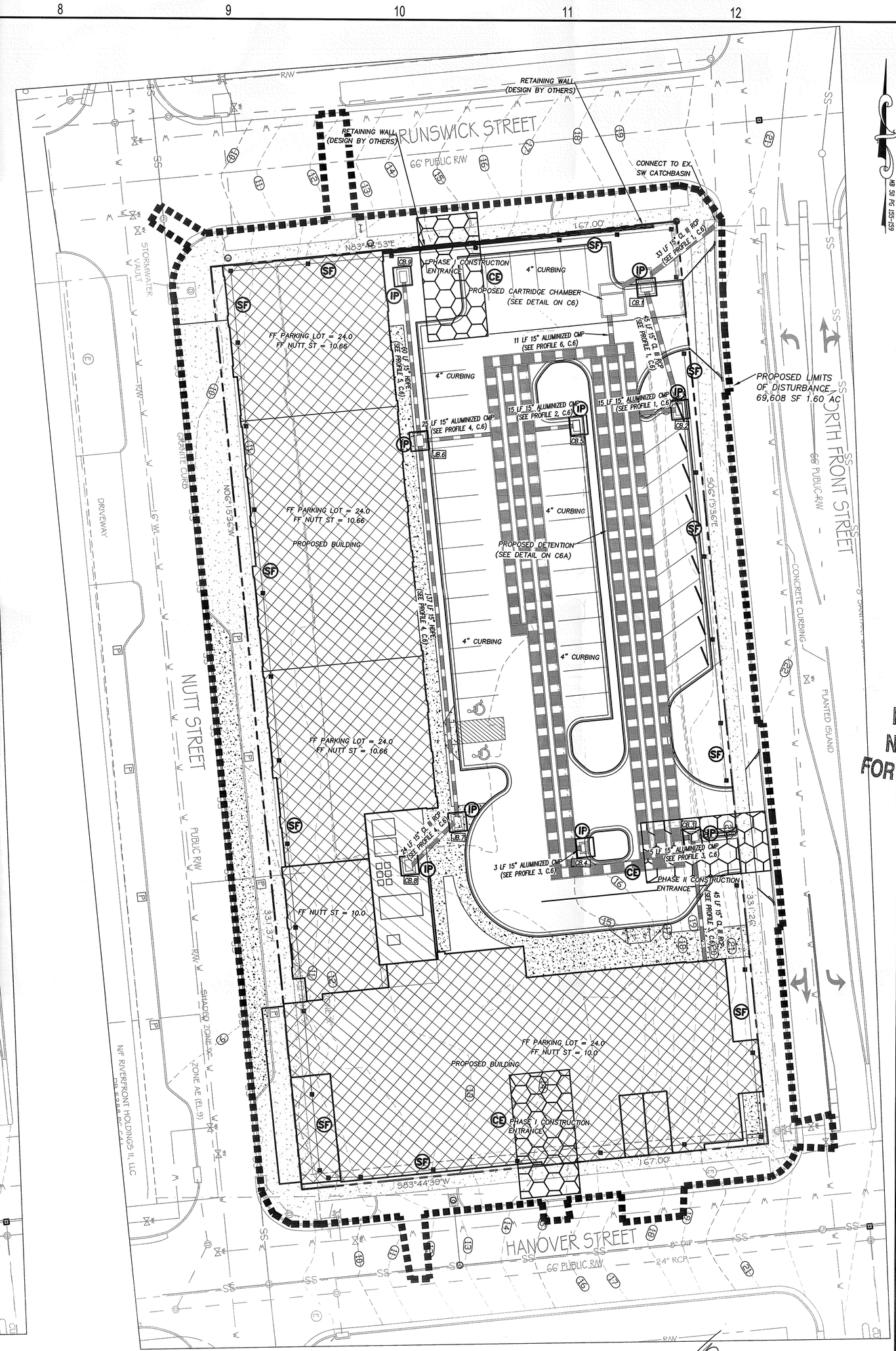

GRADING PLAN

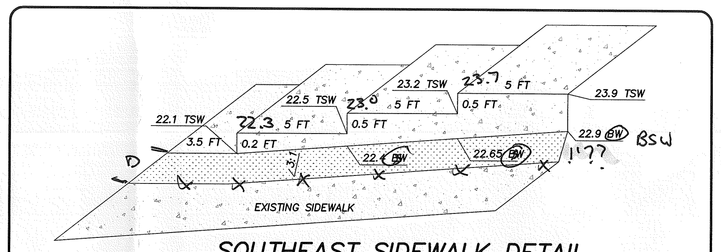

SOUTHEAST SIDEWALK DETAIL

NOT TO SCALE

.25" per 1'
1.25" per 5'

~ Provide spot ele. of existing SW.

Granite Curb detail 3-11

EROSION CONTROL

STORMWATER MANAGEMENT PLAN
APPROVED
CITY OF WILMINGTON
ENGINEERING DEPARTMENT
DATE _____ PERMIT # _____
SIGNED _____

Approved Construction Plan
Name _____ Date _____
Planning _____
Public Utilities _____
Traffic _____
Fire _____

For each open utility cut of City streets, a $325 permit shall be required from the City prior to occupancy and/or project acceptance.

SCALE IN FEET: 1"= 20'

CJMW ARCHITECTURE
119 Brookstown Ave, Suite 100
Winston-Salem, NC 27101
p. 336.724.1503
www.cjmw.com

CSD
LICENSE # C-2710
COASTAL SITE DESIGN, PC
ENGINEERING
LAND PLANNING
COMMERCIAL / RESIDENTIAL
P.O. Box 4041
Wilmington, NC 28406
(910) 791-4441

DESIGN DEVELOPMENT NOT FOR CONSTRUCTION

FINAL DESIGN NOT RELEASED FOR CONSTRUCTION

revisions

hotel INDIGO
Wilmington, NC

Copyright 2012
CJMW Architecture, P.A.

CIVIL - GRADING, STORMWATER & EROSION CONTROL PLAN

sheet

C.5

date: August 31, 2012
commission: 12-0040
drawn by: RLW

3/14/2012
\\cjmwwork2\Wm-Bim-1\12-0040 Hotel Indigo Wilmington

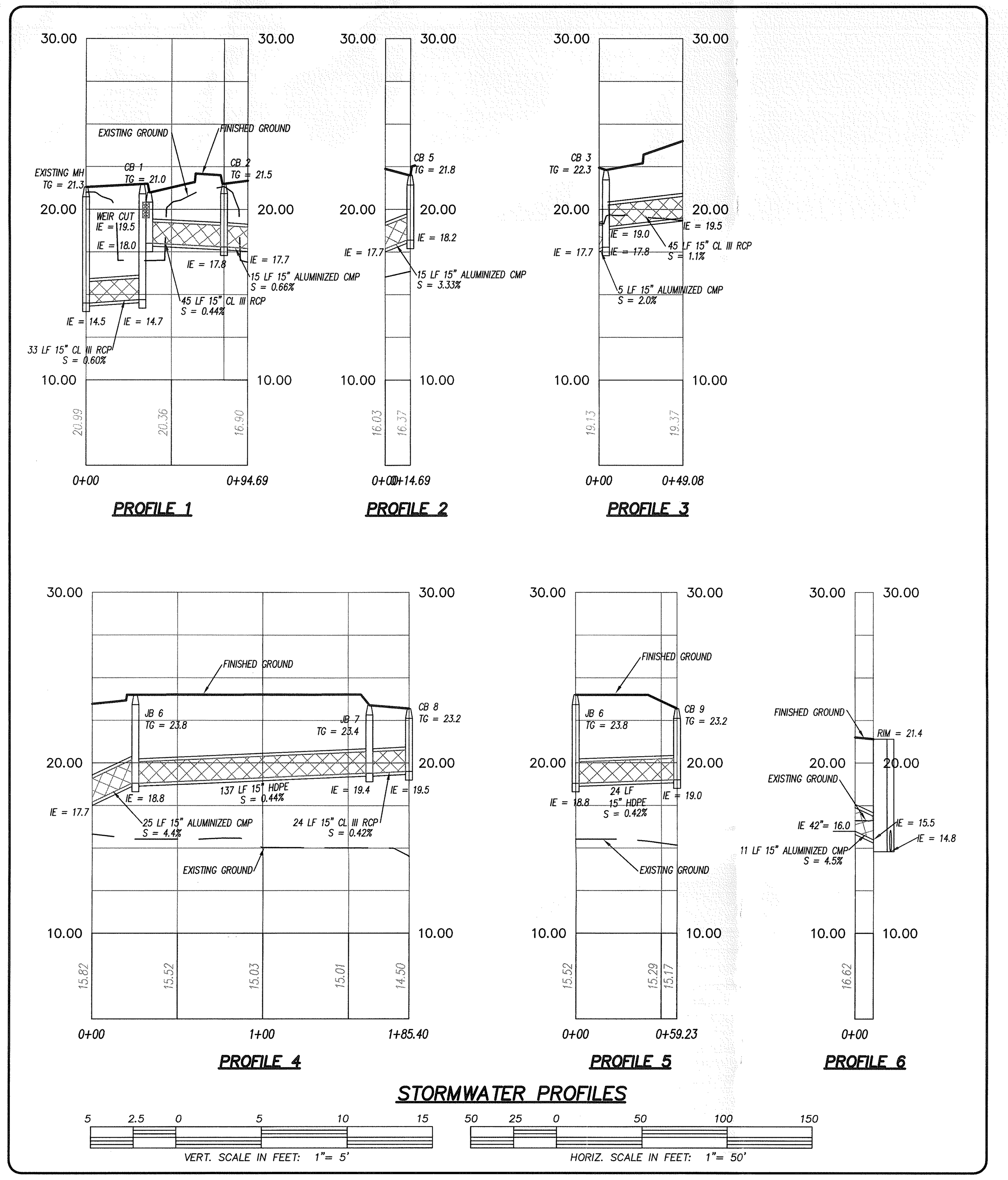

STORMWATER PROFILES

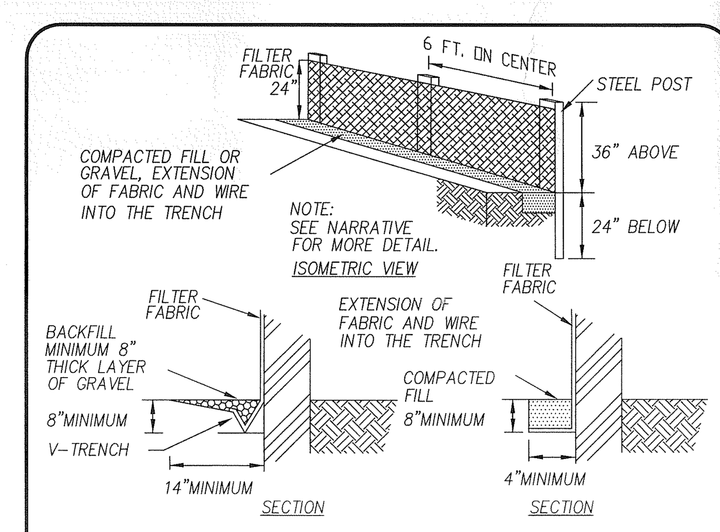

(SF) **SEDIMENT FENCE (SILT FENCE)**

Practice 6.62

NTS

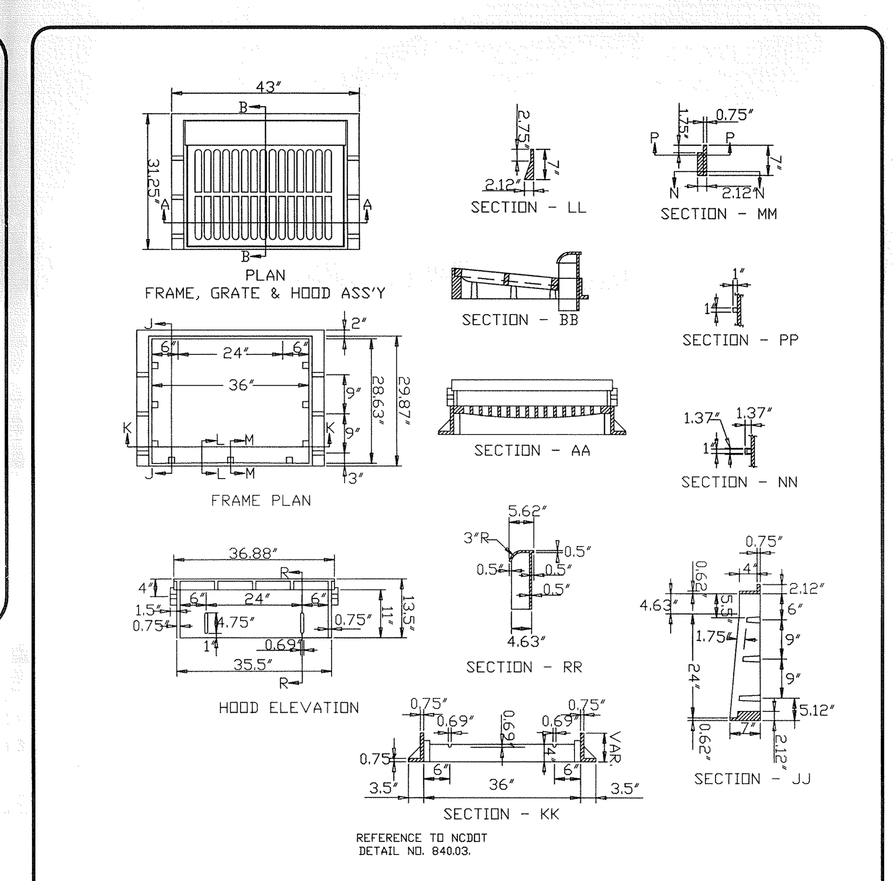

NOTE: USE TYPE "E","F",& "G" GRATE UNLESS OTHERWISE INDICATED

CATCH BASIN CASTING FOR PRE-CAST

SD 2-19

NOT TO SCALE

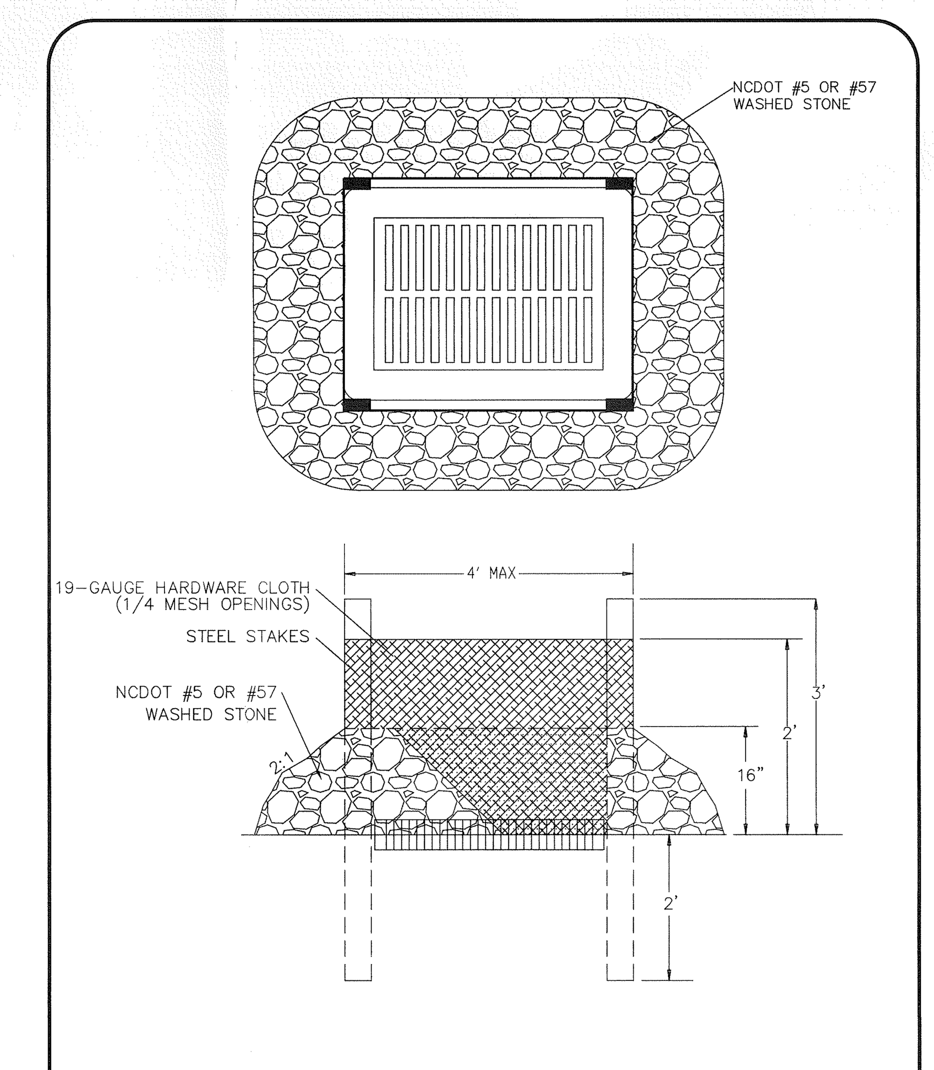

(IP) **HARDWARE CLOTH & GRAVEL DROP INLET PROTECTION**

PRACTICE 6.51

NOT TO SCALE

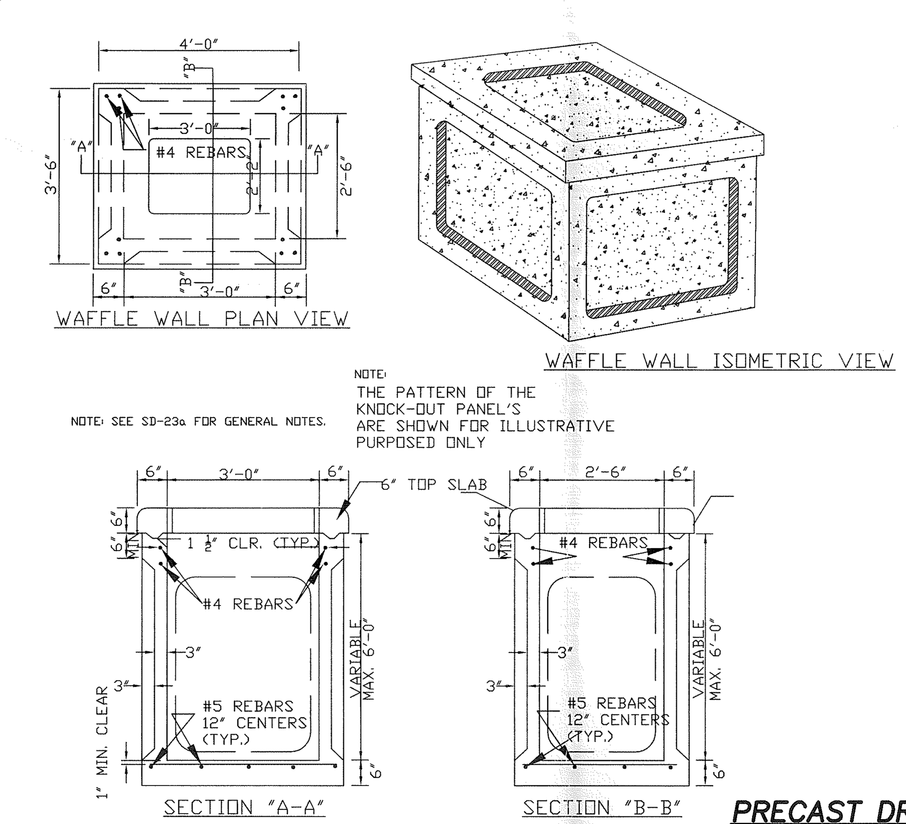

GENERAL NOTES:

- * USE 4000 PSI CONCRETE, PROVIDE FOR H-20 TRAFFIC LOADING.
- * PROVIDE ALL REINFORCING STEEL WHICH MEETS ASTM A615 FOR GRADE 60 AND WELDED WIRE FAVRIC CONFORMING TO ASTM A185,
- * LIMIT MAXIMUM DEPTH TO TOP OF BOTTOM SLAB FOR WAFFLE WALL STRUCTURE TO 6'-0".
- * PLACE LIFT HOLES OR PINS IN ACCORDANCE WITH OSHA STANDARD 1926.704
- * SAW CUT, CORE DRILL OR FORM OPENINGS, FOR PIPE TO PROVIDE REQUIRED SIZE AND LOCATION. ORIENT WAFFLE WALL STRUCTURES SO THAT PIPES ENTER THROUGH THE KNOCKOUT/WAFFLE PANELS ONLY. SEAL OPENINGS WITH HYDRAULIC CEMENT.
- * ALL ELEMENTS PRECAST TO MEET ASTM C913.
- * SET ON 6" WASHED STONE
- * FRAME AND GRATE HEIGHT MAY BE ADJUSTED WITH BRICK.
- * PROVIDE PRECAST STURCTURES OVER 4'-0" IN DEPTH WITH STEPS/LADDER INSTALLED IN ACCORDANCE WITH ASHA STANDARD 1910.27 AND AS FIELD CONDITIONS DICTATE.
- * WELDED WIRE FABRIC MAY BE SUBSTITUTED FOR REBAR AS LONG AS THE SAME AREA OF STEEL IS PROVIDED,
- * SEAL JOINTS WITH A FLEXIBLE BUTYL RUBBER BASE CONFORMING TO FEDERAL SPECIFICATION SS-S-21A, AASHTO M-19B, TYPE B - BUTYL RUBBER.
- * LIMIT MAXIMUM STRUCTURE SIZE TO INSIDE CLEAR DEMENSIONS OF 2'- 6" x 3' - 0".
- * USE FRAME AND GRATE AS PER SD-19.
- * GROUT INVERT TO PROVIDE SMOOTH FLOW

PRECAST DRAINAGE WAFFLE STRUCTURE

SD 2-23

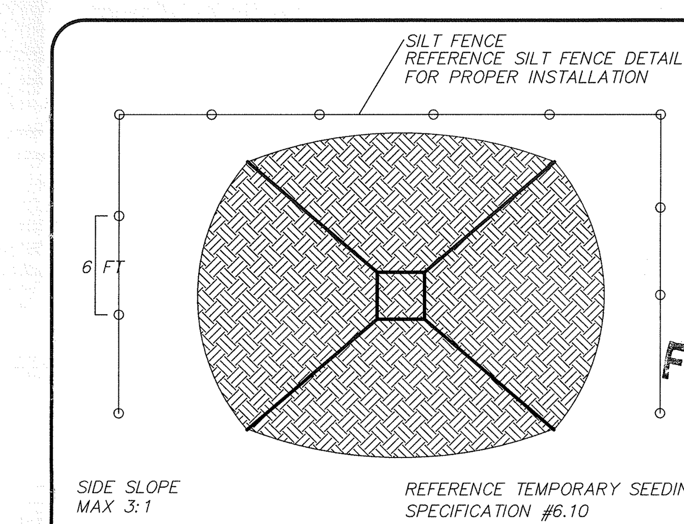

TEMPORARY STOCKPILE DETAIL

NTS

— 1 gpm/sf max. annular media loading rate

— Control + treat 100% of WQ

— Either discharge draws down in 2-5 days or must meet pre/post for 1yr 24 hr storm

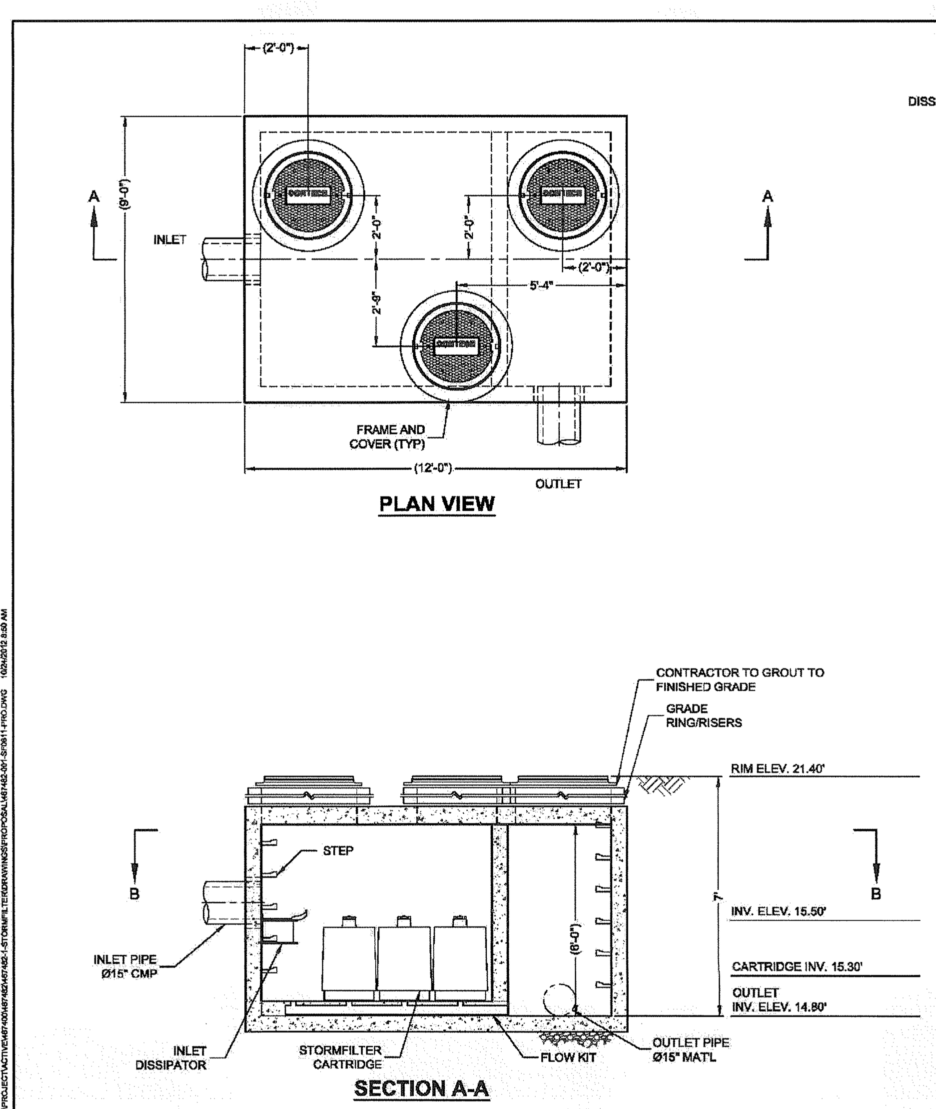

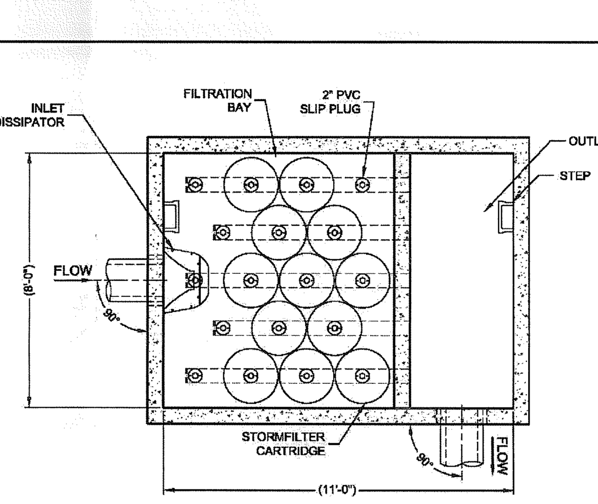

SECTION B-B

VAULT STYLE: 17H FULL HEIGHT BAFFLE WALL (NIB)

MATERIAL LIST - PROVIDED BY CONTECH

COUNT	DESCRIPTION	INSTALLED BY
12	18", VOLUME, PERLITE CARTRIDGE (PRP)	CONTECH
6	2" PVC SLIP PLUG	CONTECH
1	FLOW KIT	CONTECH
1	INLET DISSIPATOR	CONTECH
1	JOINT SEALANT (BY PRECASTER)	CONTRACTOR
3 PLCS	GRADE RINGS/RISERS	CONTRACTOR
3	Ø30" x 4" FRAME AND COVER	CONTRACTOR

SITE DESIGN DATA

WATER QUALITY FLOW RATE	N/A VOLUME BASED
PEAK FLOW RATE	N/A OFFLINE
RETURN PERIOD OF PEAK FLOW	N/A OFFLINE
FILTER MEDIA TYPE	PERLITE

PERFORMANCE SPECIFICATION

FILTER CARTRIDGES SHALL BE MEDIA-FILLED, PASSIVE, SIPHON ACTUATED, RADIAL FLOW, AND SELF CLEANING. **RADIAL MEDIA DEPTH SHALL BE 7-INCHES.** FILTER MEDIA CONTACT TIME SHALL BE AT LEAST **37 SECONDS.** SPECIFIC FLOW RATE SHALL BE **# GPM/SF (MAXIMUM).** SPECIFIC FLOW RATE IS THE MEASURE OF THE FLOW (GPM) DIVIDED BY THE MEDIA SURFACE CONTACT AREA (SF). MEDIA VOLUMETRIC FLOW RATE SHALL BE **6 GPM/CF OF MEDIA (MAXIMUM).**

GENERAL NOTES

1. CONTECH TO PROVIDE ALL MATERIALS UNLESS NOTED OTHERWISE.
2. DIMENSIONS MARKED WITH ( ) ARE REFERENCE DIMENSIONS. ACTUAL DIMENSIONS MAY VARY.
3. FOR FABRICATION DRAWINGS WITH DETAILED STRUCTURE DIMENSIONS AND WEIGHTS, PLEASE CONTACT YOUR CONTECH REPRESENTATIVE. www.contechES.com
4. STORMFILTER WATER QUALITY STRUCTURE SHALL BE IN ACCORDANCE WITH ALL DESIGN DATA AND INFORMATION CONTAINED IN THIS DRAWING. CONTRACTOR TO CONFIRM STRUCTURE MEETS REQUIREMENTS OF PROJECT.
5. STRUCTURE SHALL MEET AASHTO HS20 AND CASTINGS SHALL MEET AASHTO M306 LOAD RATING, ASSUMING EARTH COVER OF 0' - 5', AND GROUNDWATER ELEVATION AT, OR BELOW, THE OUTLET PIPE INVERT ELEVATION. ENGINEER OF RECORD TO CONFIRM ACTUAL GROUNDWATER ELEVATION.

INSTALLATION NOTES

1. ANY SUB-BASE, BACKFILL DEPTH, AND/OR ANTI-FLOTATION PROVISIONS ARE SITE-SPECIFIC DESIGN CONSIDERATIONS AND SHALL BE SPECIFIED BY ENGINEER OF RECORD.
2. CONTRACTOR TO PROVIDE EQUIPMENT WITH SUFFICIENT LIFTING AND REACH CAPACITY TO LIFT AND SET THE STORMFILTER STRUCTURE (LIFTING CLUTCHES PROVIDED).
3. CONTRACTOR TO INSTALL JOINT SEALANT BETWEEN ALL SECTIONS AND ASSEMBLE STRUCTURE.
4. CONTRACTOR TO PROVIDE, INSTALL, AND GROUT PIPES. MATCH OUTLET PIPE INVERT WITH OUTLET BAY FLOOR.
5. CONTRACTOR TO TAKE APPROPRIATE MEASURES TO PROTECT CARTRIDGES FROM CONSTRUCTION-RELATED EROSION RUNOFF.

STRUCTURE WEIGHT

APPROXIMATE HEAVIEST PICK = T.B.D. LBS.

CONTECH **PROPOSAL** DRAWING

8' x 11' STORMFILTER - 467482-001

HOTEL INDIGO

WILMINGTON, NC

SITE DESIGNATION: SF

MARK	DATE	REVISION DESCRIPTION	BY

CONTECH ENGINEERED SOLUTIONS LLC

www.contechES.com

StormFilter

DATE: 7/24/12 | DESIGNED: ATM | DRAWN: ATM | CHECKED: | APPROVED: | PROJECT NUMBER: 467482 | SHEET: 1 OF 1

Marine Fisheries

Shellfish Sanitation

Shannon Jenkins

STORMWATER MANAGEMENT PLAN

APPROVED

CITY OF WILMINGTON

ENGINEERING DEPARTMENT

DATE ________ PERMIT # ________

SIGNED ________

Approved Construction Plan

	Name	Date
Planning		
Public Utilities		
Traffic		
Fire		

For each open utility cut of City streets, a $325 permit shall be required from the City prior to occupancy and/or project acceptance.

Chip Collier 910-796-7215

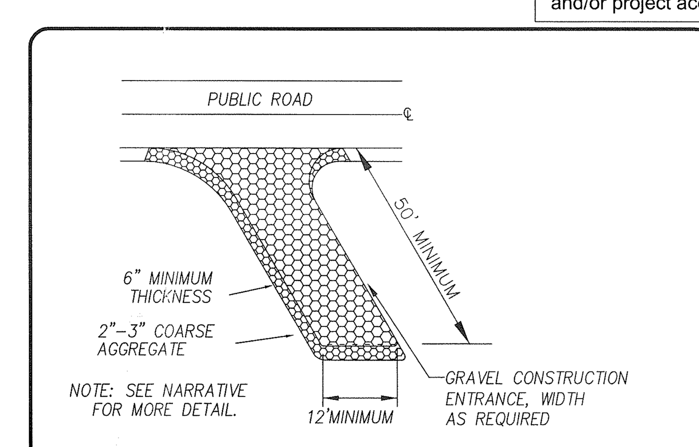

(CE) **TEMPORARY GRAVEL CONSTRUCTION ENTRANCE/EXIT DETAIL**

Practice 6.06

NTS

CJMW ARCHITECTURE

119 Brookstown Ave, Suite 100
Winston-Salem, NC 27101
p. 336.724.1503
www.cjmw.com

CSD LICENSE # C-2710

COASTAL SITE DESIGN, PC

ENGINEERING
LAND PLANNING
COMMERCIAL / RESIDENTIAL
P.O. Box 4041
Wilmington, NC 28406
(910) 791-4441

DESIGN DEVELOPMENT NOT FOR CONSTRUCTION

FINAL DESIGN NOT RELEASED FOR CONSTRUCTION

revisions

hotel INDIGO

Wilmington, NC

Copyright 2012
CJMW Architecture, P.A.

CIVIL - EROSION CONTROL DETAILS

sheet

C.6

date: August 31, 2012
commission: 12-0040
drawn by: RLW

3/14/2012
teamwork://Win-Bim-1/12-0040 Hotel Indigo Wilmington

CJMW
ARCHITECTURE
119 Brookstown Ave, Suite 100
Winston-Salem, NC 27101
p. 336.724.1503
www.cjmw.com

CSD
LICENSE # C-2710
COASTAL SITE DESIGN, PC
ENGINEERING
LAND PLANNING
COMMERCIAL / RESIDENTIAL
P.O. Box 4041
Wilmington, NC 28406
(910) 791-4441

DESIGN DEVELOPMENT
NOT FOR CONSTRUCTION

FINAL DESIGN
NOT RELEASED
FOR CONSTRUCTION

revisions

hotel INDIGO
Wilmington, NC

Copyright 2012
CJMW Architecture, P.A.

CIVIL - STORMWATER DETAILS

sheet

C.6A

date: August 31, 2012
commission: 12-0040
drawn by: RLW

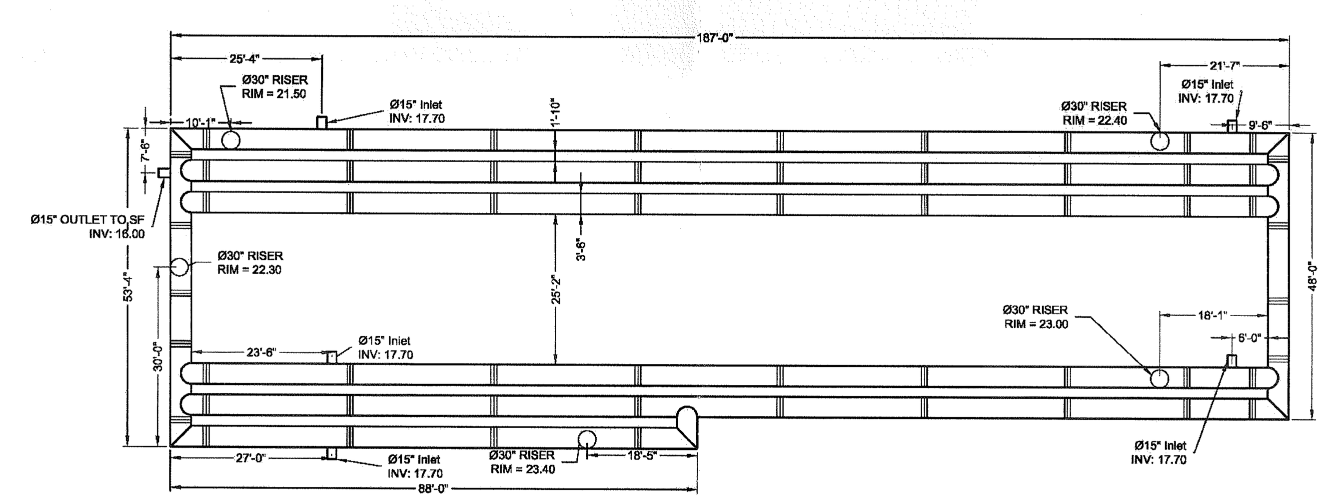

ASSEMBLY
SCALE: 1" = 20'
LOADING: H20/H25
STORAGE VOLUME: 10,468 C.F.
SYSTEM INV: 16.00

NOTES
- ALL RISER AND STUB DIMENSIONS ARE TO CENTERLINE.
- ALL ELEVATIONS, DIMENSIONS, AND LOCATIONS OF RISERS AND INLETS, SHALL BE VERIFIED BY THE ENGINEER OF RECORD PRIOR TO RELEASING FOR FABRICATION.
- ALL FITTINGS AND REINFORCEMENT COMPLY WITH ASTM A998.
- ALL RISERS AND STUBS ARE 2⅔" x ½" CORRUGATION AND 16 GAGE UNLESS OTHERWISE NOTED.
- RISERS TO BE FIELD TRIMMED TO GRADE.

CONTECH® CONSTRUCTION PRODUCTS INC.
www.contech-cpi.com
9025 Centre Pointe Dr., Suite 400, West Chester, OH 45069
800-338-1122 513-645-7000 513-645-7993 FAX

CONTECH® CMP DETENTION SYSTEMS
CONTECH PROPOSAL DRAWING

Ø42" CMP DETENTION - 467482-001
HOTEL INDIGO
WILMINGTON, NC
SITE DESIGNATION: CMP

MARK	DATE	REVISION DESCRIPTION	BY

PROJECT No.: 467482 | SEQ. No.: 001 | DATE: 8/10/12
DESIGNED: CDH | DRAWN: CDH
CHECKED: | APPROVED:
SHEET NO.: 1 OF 4

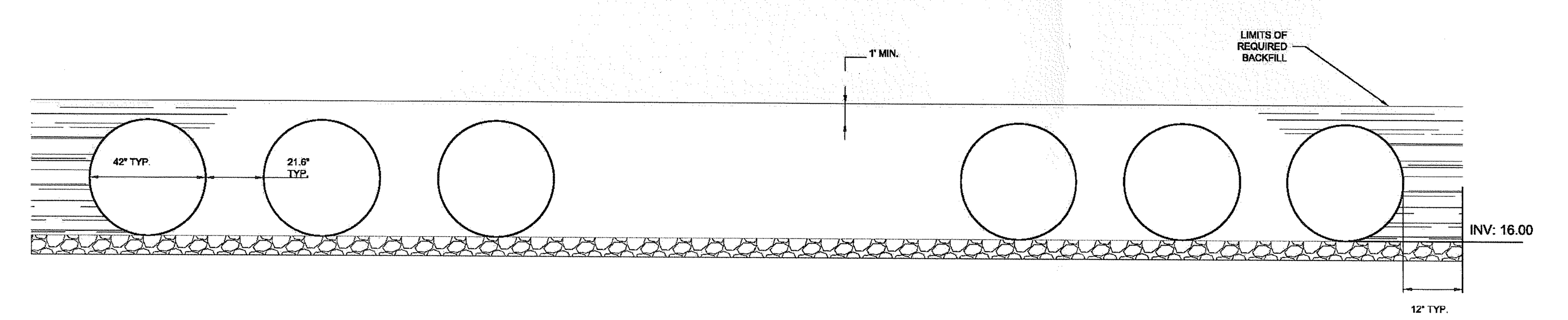

TYPICAL SECTION VIEW
SCALE: N.T.S.

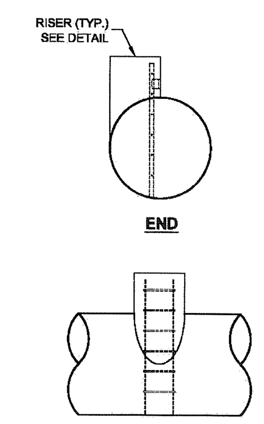

TYPICAL RISER DETAIL
SCALE: N.T.S.

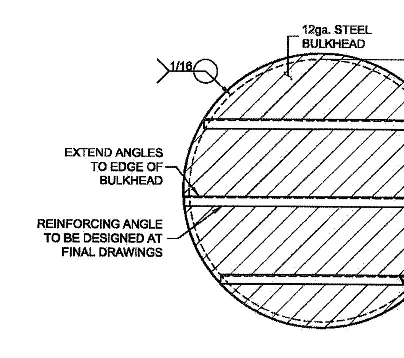

TYPICAL STEEL BULKHEAD DETAIL
SCALE: N.T.S.

CONTECH® CONSTRUCTION PRODUCTS INC. — CONTECH® CMP DETENTION SYSTEMS — CONTECH PROPOSAL DRAWING

Ø42" CMP DETENTION - 467482-001
HOTEL INDIGO
WILMINGTON, NC
SITE DESIGNATION: CMP

PROJECT No.: 467482 | SEQ. No.: 001 | DATE: 8/10/12
DESIGNED: CDH | DRAWN: CDH
SHEET NO.: 2 OF 4

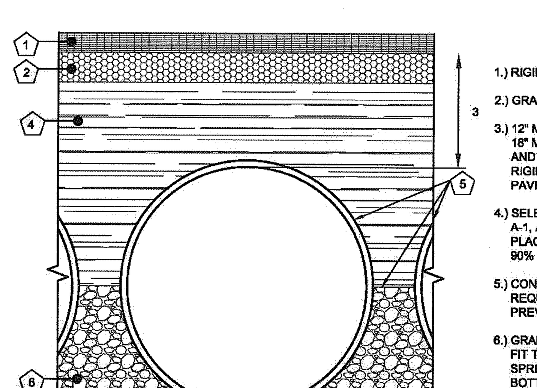

1.) RIGID OR FLEXIBLE PAVEMENT
2.) GRANULAR ROAD BASE
3.) 12" MIN. FOR DIAMETERS THROUGH 96" 18" MIN. FOR DIAMETERS FROM 102" AND LARGER MEASURED TO TOP OF RIGID OR BOTTOM OF FLEXIBLE PAVEMENT.
4.) SELECT GRANULAR FILL PER AASHTO M145 A-1, A-2 OR A-3 OR APPROVED EQUAL. PLACED IN 8" LIFTS (COMPACTED TO MIN. 90% STANDARD DENSITY PER AASHTO T-99.)
5.) CONTECH C40 NON-WOVEN GEOTEXTILE IF REQUIRED BY ENGINEER OF RECORD TO PREVENT SOIL MIGRATION.
6.) GRANULAR BEDDING, ROUGHLY SHAPED TO FIT THE BOTTOM OF THE PIPE, FROM THE SPRINGLINE OF THE PIPE TO 4"-6" BELOW THE BOTTOM OF THE PIPE. (STONE OR OTHER SUITABLE GRANULAR MATERIAL USED IN THIS SECTION SHALL ADHERE TO BACKFILL MATERIAL AND COMPACTION SPECIFICATION INDICATED BELOW).

FOUNDATION/BEDDING PREPARATION

PRIOR TO PLACING THE BEDDING, THE FOUNDATION MUST BE CONSTRUCTED TO A UNIFORM AND STABLE GRADE. IN THE EVENT THAT UNSUITABLE FOUNDATION MATERIALS ARE ENCOUNTERED DURING EXCAVATION, THEY SHALL BE REMOVED AND BROUGHT BACK TO THE GRADE WITH A FILL MATERIAL AS APPROVED BY THE ENGINEER. ONCE THE FOUNDATION PREPARATION IS COMPLETE, THE 4 INCHES OF A WELL-GRADED GRANULAR MATERIAL SHALL BE PLACED AS THE BEDDING.

BACKFILL

THE BACKFILL SHALL BE AN A1, A2 OR A3 GRANULAR FILL PER AASHTO M-145 OR A WELL-GRADED GRANULAR FILL AS APPROVED BY THE ENGINEER (SEE INSTALLATION GUIDELINES). THE MATERIAL SHALL BE PLACED IN 8-INCH LOOSE LIFTS AND COMPACTED TO 90% AASHTO T99 STANDARD PROCTOR DENSITY. WHEN PLACING THE FIRST LIFTS OF BACKFILL IT IS IMPORTANT TO MAKE SURE THAT THE BACKFILL IS PROPERLY COMPACTED UNDER AND AROUND THE PIPE HAUNCHES. BACKFILL SHALL BE PLACED SUCH THAT THERE IS NO MORE THAN A TWO LIFT (16") DIFFERENTIAL BETWEEN ANY OF THE PIPES AT ANY TIME DURING THE BACKFILL PROCESS. THE BACKFILL SHALL BE ADVANCED ALONG THE LENGTH OF THE DETENTION SYSTEM AT THE SAME RATE TO AVOID DIFFERENTIAL LOADING ON THE PIPE.

OTHER ALTERNATE BACKFILL MATERIAL MAY BE ALLOWED DEPENDING ON SITE SPECIFIC CONDITIONS. REFER TO TYPICAL BACKFILL DETAIL FOR MATERIAL REQUIRED.

(1/3) BACKFILL DETAIL
SCALE: N.T.S.

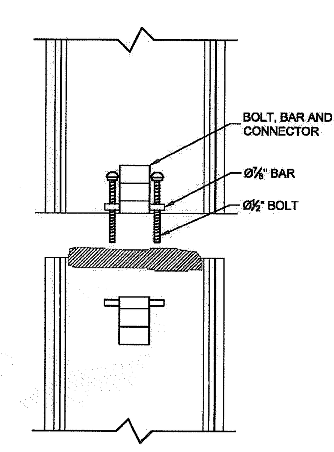

CONNECTION DETAIL
SINGLE BOLT, BAR AND STRAP

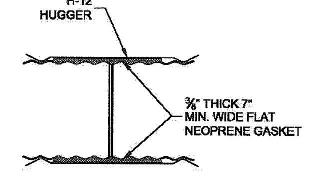

FLAT GASKET

GENERAL NOTES

1. BANDS ARE NORMALLY FURNISHED AS FOLLOWS:
12" THRU 48", 1-PIECE
54" THRU 96", 2-PIECE
102" THRU 144", 3-PIECES
2. BAND FASTENERS ARE ATTACHED WITH SPOT WELDS, RIVETS OR HAND WELDS
3. REROLLED ANNULAR END CORRUGATIONS ARE NORMALLY 2⅔" x ½". DIMENSIONS ARE SUBJECT TO MANUFACTURING TOLERANCES

(2/3) H-12 HUGGER BAND DETAIL
SCALE: N.T.S.

CONTECH® CONSTRUCTION PRODUCTS INC. — CONTECH® CMP DETENTION SYSTEMS — CONTECH PROPOSAL DRAWING

Ø42" CMP DETENTION - 467482-001
HOTEL INDIGO
WILMINGTON, NC
SITE DESIGNATION: CMP

PROJECT No.: 467482 | SEQ. No.: 001 | DATE: 8/10/12
DESIGNED: CDH | DRAWN: CDH
SHEET NO.: 3 OF 4

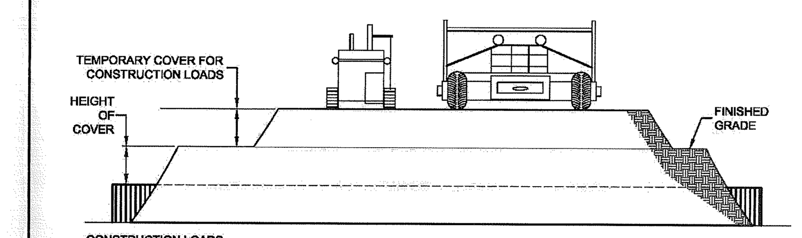

CONSTRUCTION LOADS

FOR TEMPORARY CONSTRUCTION VEHICLE LOADS, AN EXTRA AMOUNT OF COMPACTED COVER MAY BE REQUIRED OVER THE TOP OF THE PIPE. THE HEIGHT-OF-COVER SHALL MEET THE MINIMUM REQUIREMENTS SHOWN IN THE TABLE BELOW. THE USE OF HEAVY CONSTRUCTION EQUIPMENT NECESSITATES GREATER PROTECTION FOR THE PIPE THAN FINISHED GRADE COVER MINIMUMS FOR NORMAL HIGHWAY TRAFFIC.

PIPE SPAN, INCHES	AXLE LOADS (kips) 18-50	50-75	75-110	110-150
	MINIMUM COVER (FT)			
12-42	2.0	2.5	3.0	3.0
48-72	3.0	3.0	3.5	4.0
78-120	3.0	3.5	4.0	4.0
126-144	3.5	4.0	4.5	4.5

*MINIMUM COVER MAY VARY, DEPENDING ON LOCAL CONDITIONS. THE CONTRACTOR MUST PROVIDE THE ADDITIONAL COVER REQUIRED TO AVOID DAMAGE TO THE PIPE. MINIMUM COVER IS MEASURED FROM THE TOP OF THE PIPE TO THE TOP OF THE MAINTAINED CONSTRUCTION ROADWAY SURFACE.

(3/4) CONSTRUCTION LOADING DIAGRAM
SCALE: N.T.S.

SPECIFICATION FOR CORRUGATED STEEL PIPE-ALUMINIZED TYPE 2 STEEL

SCOPE

THIS SPECIFICATION COVERS THE MANUFACTURE AND INSTALLATION OF THE CORRUGATED STEEL PIPE (CSP) DETAILED IN THE PROJECT PLANS.

MATERIAL

THE ALUMINIZED TYPE 2 STEEL COILS SHALL CONFORM TO THE APPLICABLE REQUIREMENTS OF AASHTO M274 OR ASTM A929.

PIPE

THE CSP SHALL BE MANUFACTURED IN ACCORDANCE WITH THE APPLICABLE REQUIREMENTS OF AASHTO M36 OR ASTM A760. THE PIPE SIZES, GAGES AND CORRUGATIONS SHALL BE AS SHOWN ON THE PROJECT PLANS.

ALL FABRICATION OF THE PRODUCT SHALL OCCUR WITHIN THE UNITED STATES.

HANDLING AND ASSEMBLY

SHALL BE IN ACCORDANCE WITH RECOMMENDATIONS OF THE NATIONAL CORRUGATED STEEL PIPE ASSOCIATION (NCSPA)

INSTALLATION

SHALL BE IN ACCORDANCE WITH AASHTO STANDARD SPECIFICATIONS FOR HIGHWAY BRIDGES, SECTION 26, DIVISION II OR ASTM A798 AND IN CONFORMANCE WITH THE PROJECT PLANS AND SPECIFICATIONS. IF THERE ARE ANY INCONSISTENCIES OR CONFLICTS THE CONTRACTOR SHOULD DISCUSS AND RESOLVE WITH THE SITE ENGINEER.

IT IS ALWAYS THE RESPONSIBILITY OF THE CONTRACTOR TO FOLLOW OSHA GUIDELINES FOR SAFE PRACTICES.

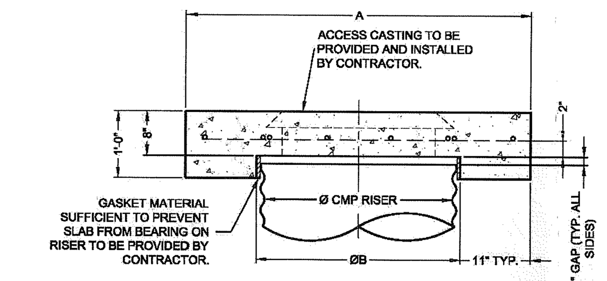

SECTION VIEW

Ø CMP RISER	A	Ø B	REINFORCING	**BEARING PRESSURE (PSF)
24"	Ø 4' 4'X4'	26"	#5 @ 12" OCEW #5 @ 12" OCEW	2,410 1,780
30"	Ø 4'-6" 4'-6" X 4'-6"	32"	#5 @ 12" OCEW #5 @ 12" OCEW	2,120 1,530
36"	Ø 5' 5' X 5'	38"	#5 @ 10" OCEW #5 @ 10" OCEW	1,890 1,350
42"	Ø 5'-6" 5'-6" X 5'-6"	44"	#5 @ 10" OCEW #5 @ 9" OCEW	1,720 1,210
48"	Ø 6' 6' X 6'	50"	#5 @ 9" OCEW #5 @ 8" OCEW	1,600 1,100

REINFORCING TABLE

** ASSUMED SOIL BEARING CAPACITY

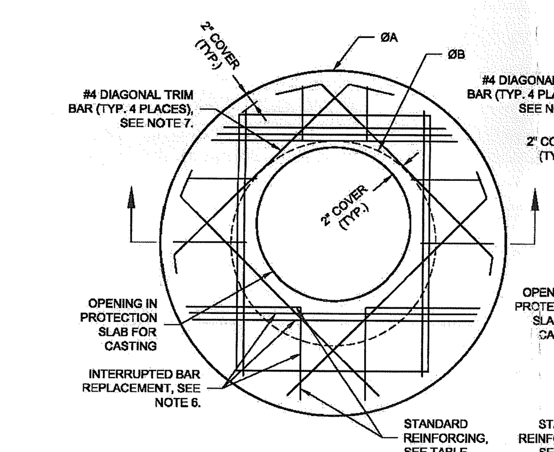

ROUND OPTION PLAN VIEW

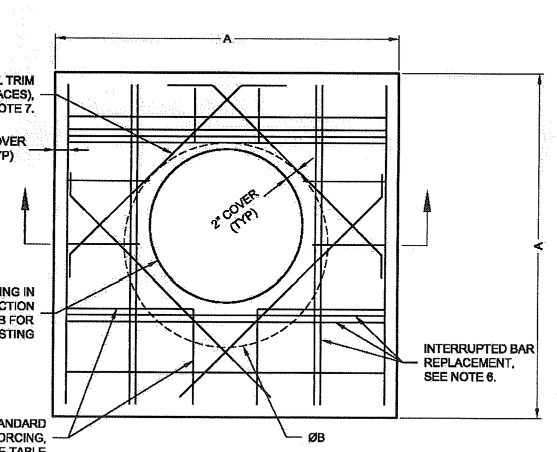

SQUARE OPTION PLAN VIEW

NOTES:
1. DESIGN IN ACCORDANCE WITH AASHTO, 17th EDITION.
2. DESIGN LOAD HS25.
3. EARTH COVER = 1' MAX.
4. CONCRETE STRENGTH = 3,500 psi
5. REINFORCING STEEL = ASTM A615, GRADE 60.
6. PROVIDE ADDITIONAL REINFORCING AROUND OPENINGS EQUAL TO THE BARS INTERRUPTED, HALF EACH SIDE. ADDITIONAL BARS TO BE IN THE SAME PLANE.
7. TRIM OPENING WITH DIAGONAL #4 BARS, EXTEND BARS A MINIMUM OF 12" BEYOND OPENING, BEND BARS AS REQUIRED TO MAINTAIN BAR COVER.
8. PROTECTION SLAB AND ALL MATERIALS TO BE PROVIDED AND INSTALLED BY CONTRACTOR.
9. DETAIL DESIGN BY DELTA ENGINEERING, BINGHAMTON, NY.

(4/4) MANHOLE CAP DETAIL
SCALE: N.T.S.

CONTECH® CONSTRUCTION PRODUCTS INC. — CONTECH® CMP DETENTION SYSTEMS — CONTECH PROPOSAL DRAWING

Ø42" CMP DETENTION - 467482-001
HOTEL INDIGO
WILMINGTON, NC
SITE DESIGNATION: CMP

PROJECT No.: 467482 | SEQ. No.: 001 | DATE: 8/10/12
DESIGNED: CDH | DRAWN: CDH
SHEET NO.: 4 OF 4

---

20 10 0 20 40 60
HORIZ. SCALE IN FEET: 1"= 20'

STORMWATER MANAGEMENT PLAN
APPROVED
CITY OF WILMINGTON
ENGINEERING DEPARTMENT
DATE ________ PERMIT # ________
SIGNED ________

Approved Construction Plan
Name ____ Date ____
Planning ____
Public Utilities ____
Traffic ____
Fire ____

For each open utility cut of City streets, a $325 permit shall be required from the City prior to occupancy and/or project acceptance.

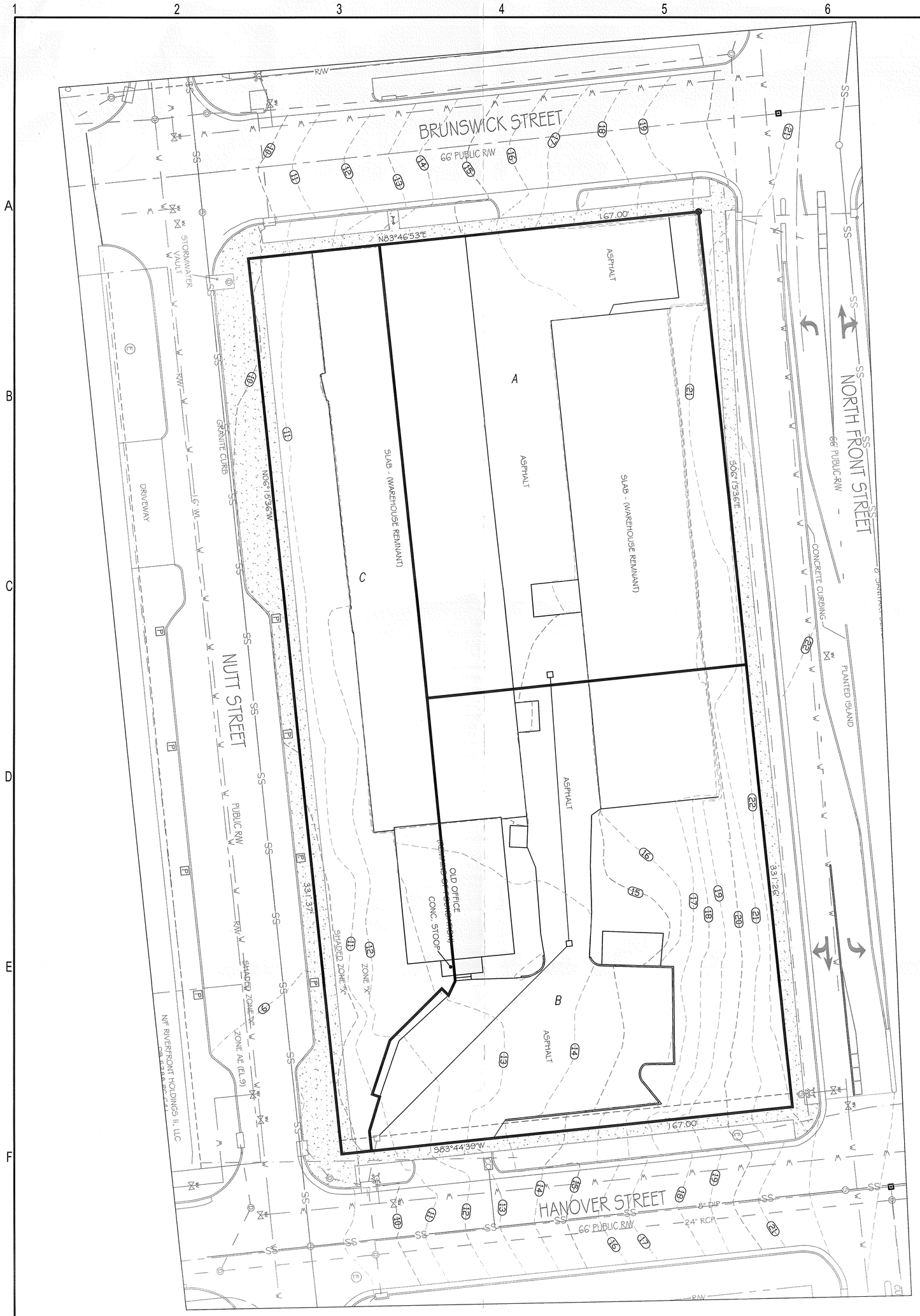

PRE DEVELOPMENT DRAINAGE PLAN

DRAINAGE AREA	AREA SF
A	19,853
B	20,888
C	14,489
TOTAL	55,330

DRAINAGE AREA

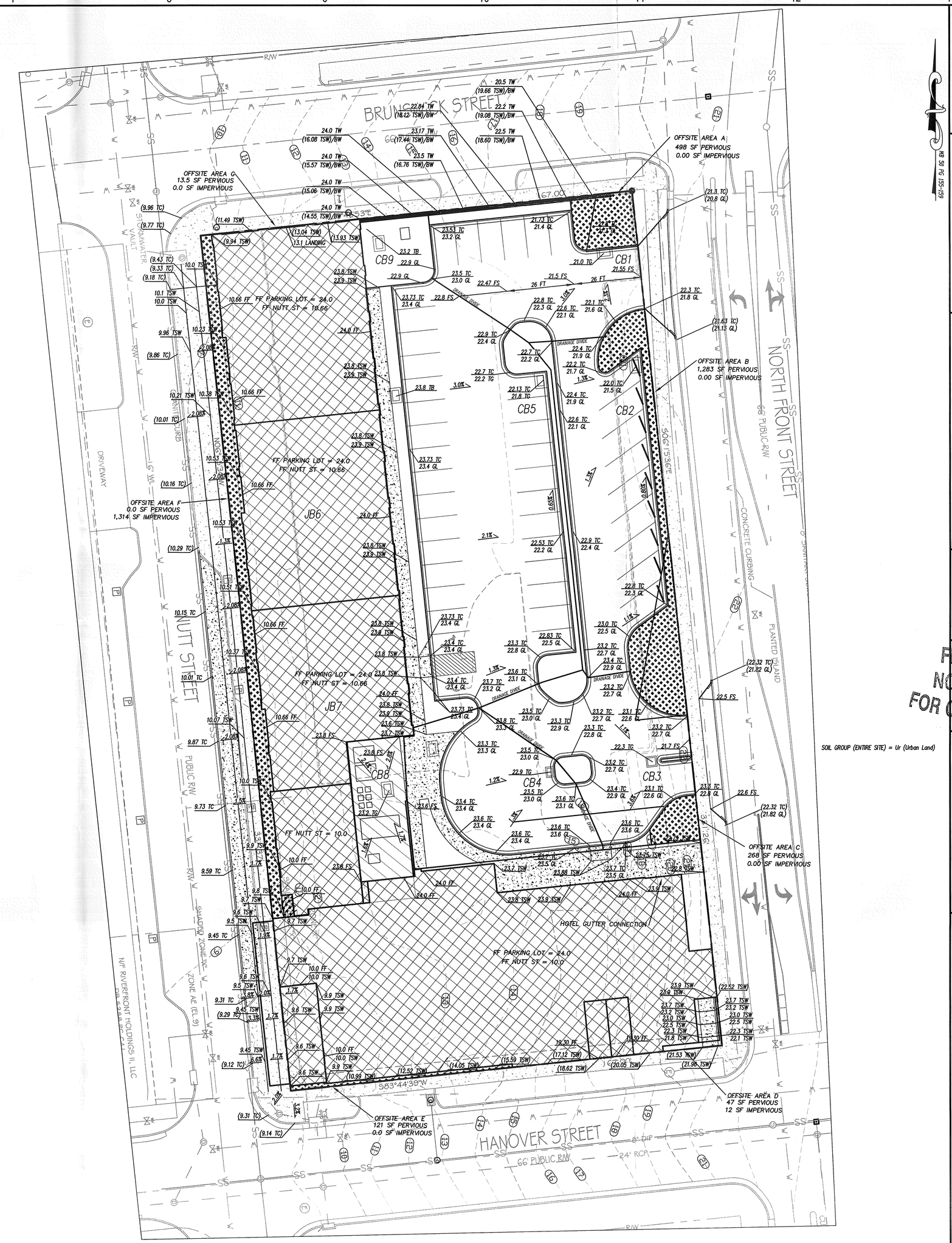

SOIL GROUP (ENTIRE SITE) = Ur (Urban Land)

POST DEVELOPMENT DRAINAGE PLAN

Offsite Draining offsite
Driveway 485 sf
1324 + 425 = 1751 < 2500 ✓

OFFSITE	AREA SF (PERVIOUS)	AREA SF (IMPERVIOUS)
A	498	0.00
B	1,283	0.00
C	268	0.00
D	47	12
E	121	0.00
F	0.00	1,314 EXISTING
G	15.0	0.00
TOTAL	2,232	1,326

Modify already existing DI to be CDS

STRUCTURE	C	AREA (SF)
CB1	0.95	5,143
CB2	0.95	4,230
CB3	0.95	2,936
CB4	0.95	3,478
CB5	0.95	10,317
JB6	0.95	4,041
JB7	0.95	4,949
CB8	0.95	1,141
CB9	0.95	4,855
HOTEL GUTTER	0.95	12,602
TOTAL		51,772

51772 + 1324 + 2232 = 55,330 sf

OFFSITE DRAINAGE AREAS draining

INLET DRAINAGE AREAS

SCALE IN FEET: 1" = 20'

STORMWATER MANAGEMENT PLAN
APPROVED
CITY OF WILMINGTON
ENGINEERING DEPARTMENT
DATE _____ PERMIT # _____
SIGNED_____

Approved Construction Plan
Name _____ Date ____
Planning_____
Public Utilities_____
Traffic_____
Fire_____

For each open utility cut of City streets, a S325 permit shall be required from the City prior to occupancy and/or project acceptance.

CJMW
ARCHITECTURE
119 Brookstown Ave, Suite 100
Winston-Salem, NC 27101
p. 336.724.1593
www.cjmw.com

CSD
LICENSE # C-2710
COASTAL SITE DESIGN, PC
ENGINEERING
LAND PLANNING
COMMERCIAL / RESIDENTIAL
P.O. Box 4041
Wilmington, NC 28406
(910) 791-4441

DESIGN DEVELOPMENT NOT FOR CONSTRUCTION

FINAL DESIGN NOT RELEASED FOR CONSTRUCTION

revisions

hotel INDIGO
Wilmington, NC

Copyright 2012
CJMW Architecture, P.A.

CIVIL - DRAINAGE AREAS

sheet

DA

date: June 20, 2012
commission: 12-0040
drawn by: RLW

3/14/2012
Jobs\12-0040 - Wilm-Brm-1\12-0040 Hotel Indigo Wilmington