CONSTRUCTION PLANS FOR MASONBORO LODGE - PHASE 2 1426 NAVAHO TRAIL

CITY OF WILMINGTON NORTH CAROLINA
Public Services Engineering Division
APPROVED STORMWATER MANAGEMENT PLAN
Date: _____ Permit #_____
Signed: _____

Approved Construction Plan

	Name	Date
Planning		
Traffic		
Fire		
CFPUA		

NOTES

1. AN ALL WEATHER DRIVING SURFACE FOR EMERGENCY VEHICLES MUST BE MAINTAINED DURING CONSTRUCTION.

2. THERE SHALL BE NO ENCUMBRANCES WITHIN THE NCDOT RIGHT OF WAY.

3. ALL MATERIALS UTILIZED IN THE CONSTRUCTION OF THE UTILITIES WITHIN THE PUBLIC RIGHT OF WAY SHALL BE NCDOT APPROVED MATERIALS.

4. CONTRACTOR IS TO PROVIDE ALL NECESSARY TRAFFIC AND SAFETY CONTROL DEVICES IN WORK AREAS.

5. FIELD VERIFY EXISTING UTILITIES FOR CONFLICTS PRIOR TO CONSTRUCTION, NOTIFY ENGINEER AT 910-619-9990 BEFORE PROCEEDING WITH CONSTRUCTION.

6. CONTRACTOR IS TO NOTIFY (AT A MINIMUM) THE FOLLOWING COMPANIES FOR LOCATION SERVICES:
ULOCO .....1-800-632-4949, 48 HOURS IN ADVANCE
BELL SOUTH.....1-800-392-8712 (STEVE DAYVAULT)

7. PRIOR TO ANY CLEARING, GRADING OR CONSTRUCTION ACTIVITY, TREE PROTECTION FENCING (IF REQUIRED) WILL BE INSTALLED AROUND PROTECTED TREES OR GROVES OF TREES AND NO CONSTRUCTION WORKERS, TOOLS, MATERIALS, OR VEHICLES ARE PERMITTED WITHIN THE TREE PROTECTION.

8. ALL PAVEMENT MARKINGS IN PUBLIC RIGHTS OF WAY AND FOR DRIVEWAY ARE TO BE THERMO PLASTIC AND MEET CITY AND/OR NCDOT STANDARDS.

9. IT SHALL BE THE RESPONSIBILITY OF THE SUBDIVDER TO ERRECT OFFICIAL STREET NAME SIGNS AT ALL INTERSECTIONS ASSOCIATED WITH THE SUBDIVSION IN ACCORDANCE WITH THE TEHNICAL STANDARDS AND SPECIFICATIONS MANUAL. THE SUBDIVIDER MAY ACCUIRE AND ERECT OFFICIAL STREET NAME SIGNS OR MAY CHOOSE TO CONTRACT WITH THE CITY TO INSTALL THE STREET SIGNS AND THE SUBDIVIDER SHALL PAY THE COST OF SUCH INSTALLATION. CONTACT TRAAFFIC ENGINEERING AT 341-7888 TO DISCUSS INSTALLATION OF TRAFFIC AND STREET NAME SIGNS. PROPOSED STREET NAMES MUST BE APPROVED PRIOR TO INSTALLATION OF STREET SIGN NAMES.

10. TRAFFIC CONTROL DEVICES (INCLUDING SIGNS AND PAVEMENT MARKINGS) IN AREAS OPEN TO PUBLIC TRAFFIC ARE TO MEET MUTCD STANDARDS AND BE MAINTAINED BY THE OWNER.

11. TRAFFIC ENGINEERING TO BE NOTIFIED AT 341-7888 FORTY-EIGHT HOURS PRIOR TO ANY EXCAVATION IN THE RIGHT OF WAY.

12. ANY BROKEN OR MISING SIDEWALK PANELS AND CURBING WILL BE REPLACED.

13. CONTACT KAREN DIXON AT 341-7888 TO DISCUSS STREET LIGHTING OPTIONS.

14. PROJECT SHALL COMPLY WITH CFPUA CROSS CONNECTION CONTROL REQUIREMENTS. WATER METRES CANNOT BE RELEASED UNTIL ALL REQUIREMENTS ARE MET AND THE STATE HAS GIVEN THEIR FINAL APPROVAL.

15. IF THE CONTRACTOR DESIRES CFPUA WATER FOR CONSTRUCTION HE SHALL APPLY IN ADVANCE FOR THIS SERVICE AND MUST SUPPLY A RPZ BACKFLOW PREVENTION DEVICE ON THE DEVELOPERS SIDE OF THE WATER METER BOX.

16. ANY IRRIGATION SYSTEM SUPPLIED BY CFPUA SHALL COMPLY WITH THE CFPUA CROSS CONNECTION REGULATIONS

17. ALL TRAFFIC CONTROL SIGNS AND MARKINGS OFF THE RIGHT-OF-WAY ARE TO BE MAINTAINED BY THE PROPERTY OWNER IN ACCORDANCE WITH MUTCO STANDARDS.

18. ALL PARKING STALL MARKINGS AND LANE ARROWS WITHIN PARKING AREAS SHALL BE WHITE. ALL PAVEMENT MARKINGS IN PUBLIC RIGHTS OF WAY FOR DRIVEWAY ARE TO BE THERMO PLASTIC AND MEET CITY AND/OR NCDOT STANDARDS.

19. A UTILITY CUT PERMIT IS REQUIRED FOR EACH OPEN CUT OF A COW STREET. NOTE THIS ON THE PLAN AND CONTACT 910-341-5888 FOR MORE DETAILS. IN CERTAIN CASES AN ENTIRE RESURFACING OF THE AREA BEING OPEN CUT MAY BE REQUIRED.

20. INSTALL REFLECTORS PER CITY AND NCDOT STANDARDS. TRAFFIC ENGINEERING MUST APPROVE OF PAVEMENT MARKING LAYOUT PRIOR TO ACTUAL STRIPING.

21. A LANDSCAPING PLAN INDICATING THE LOCATION OF REQUIRED STREET TREES SHALL BE SUBMITTED TO THE CITY OF WILMINGTON TRAFFIC ENGINEERING DIVISION AND PARKS AND RECREATION DEPARTMENT FOR REVIEW AND APPROVAL PRIOR TO THE RECORDING OF THE FINAL PLAT (SD 15-14 CofW TECH STDS)

22. FIRE HYDRANTS CANNOT BE FURTHER THAN 8' FROM THE CURB.

23. PARKING AND LANDSCAPING CANNOT BLOCK FIRE HYDRANTS OF FDC'S

24. FDC'S CAN BE NO FURTHER THAN 40' FROM FIRE DEPARTMENT VEHICLE PLACEMENT

25. FDC'S CAN BE NO FURTHER THAN 150' FROM A FIRE HYDRANT

26. BICYCLE PARKING IS PROVIDED ON THE SOUTHWEST CORNER OF PROPOSED BUILDING

BEFORE YOU DIG
STOP
CALL 1 800 632-4949
N.C. ONE-CALL CENTER
IT'S THE LAW

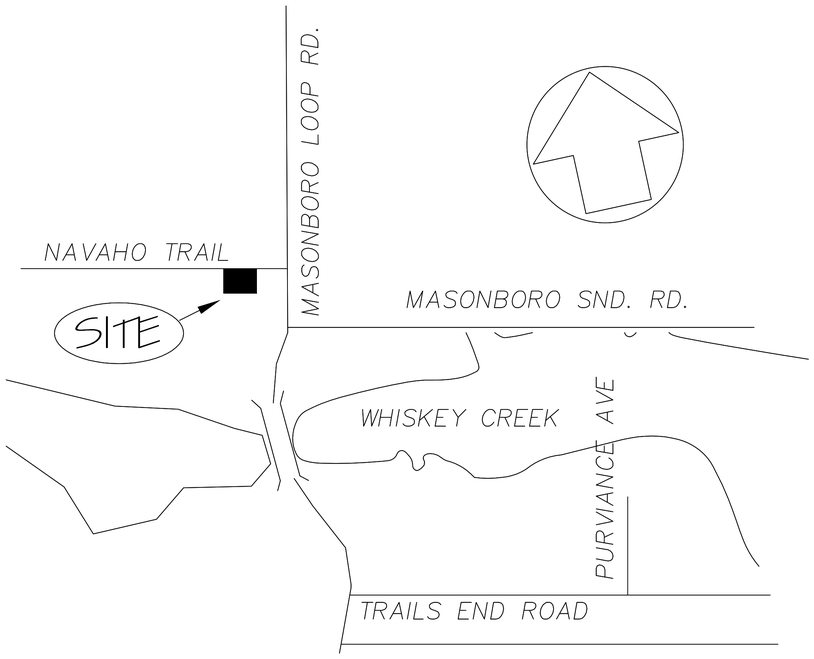

VICINITY MAP
MAY, 2014

LIST OF DRAWINGS

XX	COVER SHEET
C1	SITE PLAN
C2	GRADING, DRAINAGE & EROSION CONTROL
C3	UTILITY PLAN
L1.2	LANDSCAPE PLAN

OWNER/DEVELOPER
WORSLEY INVESTMENT AND
DEVELOPMENT COMPANY, LLC
1133 MILITARY CUTOFF ROAD
SUITE 100
WILMINGTON, NC 28405
1-910-256-0044

CIVIL ENGINEER
JBS CONSULTING, PA
BRAD SEDGWICK, PE
7332 COTESWORTH DRIVE
WILMINGTON, NC 28405
1-910-619-9990

NORTH CAROLINA PROFESSIONAL SEAL 029273 ENGINEER BRADFORD SEDGWICK

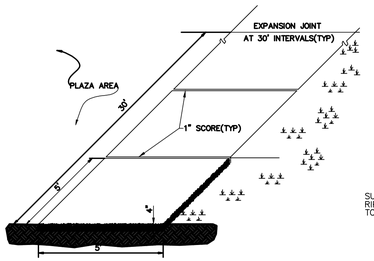

STANDARD SIDEWALK DETAIL
SD 8-15
NOT TO SCALE

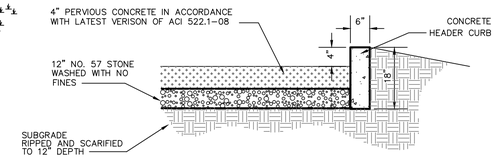

PERVIOUS CONCRETE SECTION
NOT TO SCALE

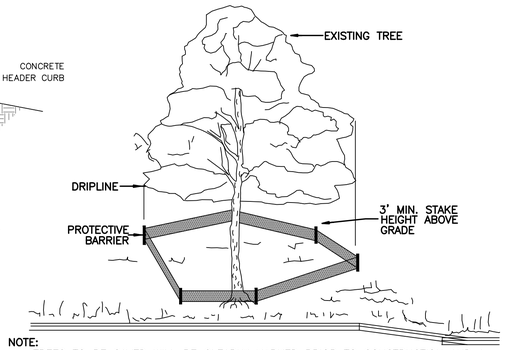

NOTE:
TREES TO BE SAVED WILL BE CLEARLY MARKED PRIOR TO CONSTRUCTION AND A PROTECTIVE BARRIER IS TO BE INSTALLED AT THE DRIPLINE.
DRIP LINE – THE AREA OF SOIL DIRECTLY BENEATH THE TREE EXTENDING OUT TO THE TIPS OF THE OUTERMOST BRANCHES.
CONTRACTOR TO COMPLIE WITH COW SIGN ORDINACE FOR MARKING FENCING

METHOD OF TREE PROTECTION DURING CONSTRUCTION
SD 15-08
NOT TO SCALE

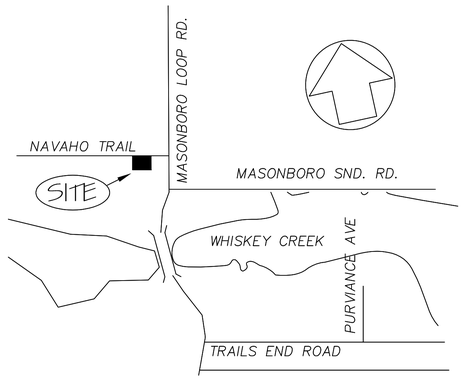

VICINITY MAP

GENERAL NOTES

1. PLAN BASED ON A SURVEY PROVIDED BY DANFORD AND BRISTOW LAND SURVEYING, P.C., DATED DECEMBER 15, 2005.
2. PREVIOUS SITE PLAN FOR SPECIAL USE PERMIT ON 0.58 ACRE TRACT PREPARED BY WITHERS & RAVENEL AND APPROVED BY WILMINGTON CITY COUNCIL ON DECEMBER 6, 2005. THIS PLAN IS SHOWN IN GRAY AS EXISTING. PHASE 2 IS LIMITED TO THE AREA INDICATED WITHIN THE LIMITS OF CONSTRUCTION.
3. THIS PLAN IS TO BE COMBINED WITH THE PHASE I SITE PLAN. EXISTING PARCELS ARE TO BE COMBINED INTO ONE PARCEL.
4. SIDEWALK ALONG NAVAHO TRAIL IS PROVIDED. ADEQUATE VERTICAL SEPARATION DOES NOT EXIST FOR SIDEWALK TO BE LOCATED ALONG MASONBORO LOOP ROAD. (PER JERRY TAYLOR, NEW HANOVER COUNTY D.O.T. MAINTENANCE YARD, 910-341-0500).
5. GARBAGE PICKUP WILL BE THROUGH ROLL-OUT CONTAINERS STORED WITHIN THE BUILDING FOOTPRINT.
6. SITE IS NOT LOCATED WITHIN ANY ZONING OVERLAY DISTRICTS.
7. SITE IS NOT LOCATED WITHIN A 100-YEAR FLOOD ZONE.
8. SITE IS NOT LOCATED WITHIN A CONSERVATION OVERLAY DISTRICT.
9. SITE DOES NOT CONTAIN ANY 404 WETLAND AREAS.
10. ALL UTILITIES SHALL BE UNDERGROUND.
11. ALL SIGNS WILL BE LOCATED AND APPROVED BY THE CITY OF WILMINGTON PLANNING DEPARTMENT.
12. ALL EXISTING SIGNIFICANT TREES WILL BE PRESERVED.
13. PROJECT WILL BE COMPLETED IN ONE PHASE. ESTIMATED COMPLETION DATE WILL BE 12-24 MONTHS AFTER APPROVAL.
14. TACTILE WARNING MATS WILL BE INSTALLED ON ALL WHEELCHAIR RAMPS.
15. PARKING STALL DEPTH IS AS PROVIDED IN PHASE 1 SITE PLAN FOR PREVIOUSLY APPROVED SPECIAL USE PERMIT.
16. LANDSCAPE BUFFER ABUTTING SWIFT PROPERTY REDUCED TO 10', WITH 8' SOLID PRIVACY FENCE, TO ACCOMMODATE PARKING LOT. BUFFER REDUCTION IS IN ACCORDANCE WITH SECTION 18-499 OF THE WILMINGTON LAND DEVELOPMENT CODE (SEE JUSTIFICATION LETTER). BUILDING DOES NOT ENCROACH ON STANDARD 20' BUFFER.
17. PARKING LOT PAVING TO BE ENTIRELY PERVIOUS MATERIAL MEETING CITY LOAD-BEARING STANDARDS. SUB-BASE MUST PROVIDE ADEQUATE CAPACITY TO ABSORB INFILTRATING STORMWATER. PAVING MAY BE COUNTED AS 60% PERVIOUS FOR IMPERVIOUS SURFACE CALCULATIONS.
18. RAIN GARDEN SWALES AND 50% XERIC LANDSCAPING WILL BE PROVIDED TO MEET EXCEPTIONAL DESIGN CRITERIA, INCREASING THE MAXIMUM IMPERVIOUS ALLOWANCE TO 35% AND DENSITY EXCEEDING 2.5 UNITS/ACRE, PURSUANT TO ARTICLE 10 OF THE LAND DEVELOPMENT CODE.
19. RAIN GARDEN FACILITIES WILL CAPTURE INITIAL STORMWATER RUNOFF. THE PROPOSED BASINS WILL BE PLANTED WITH SUITABLE SPECIES AND ALLOW INFILTRATION OF RUNOFF INTO THE GROUNDWATER SYSTEM. PROPER STORMWATER MANAGEMENT TECHNIQUES WILL CONVEY RUNOFF FROM LARGE STORM EVENTS INTO A SUITABLY ENGINEERED STORMWATER MANAGEMENT SYSTEM. RAIN GARDEN BASINS HAVE BEEN STRATEGICALLY LOCATED AT LOW PONTS OF THE SITE.
20. DETAILS FOR XERIC LANDSCAPING WILL BE PROVIDED ON LANDSCAPE PLANS.
21. LOW-FLOW WATER FIXTURES WILL BE INSTALLED TO LIMIT WATER USAGE.
22. THE CONTRACTOR SHALL VISIT THE SITE AND BECOME FAMILIARIZED WITH EXISTING CONDITIONS BOTH ON AND IMMEDIATELY ADJACENT TO THE SITE.
23. THE CONTRACTOR SHALL BE RESPONSIBLE TO COORDINATE DISCONNECTION AND/OR THE RELOCATION OF ALL EXISTING UTILITIES WITH APPROPRIATE PERSONNEL.
24. ALL WORK SHALL BE GOVERNED BY THE LATEST EDITIONS OF THE STATE MECHANICAL, PLUMBING, ELECTRICAL, FIRE PROTECTION, BUILDING CODE, ENERGY CONSERVATION, HANDICAP ACCESSIBILITY, NATIONAL ELECTRICAL CODES AND NATIONAL FIRE PROTECTION ASSOCIATED CODES AND AS ADOPTED BY THE AUTHORITIES HAVING JURISDICTION.
25. OCCUPATIONAL HEALTH AND SAFETY ADMINISTRATION (OSHA) STANDARDS FOR EXCAVATIONS; FINAL RULE 29CFR PART 1926, SUBPART "P" APPLIES TO ALL EXCAVATIONS EXCEEDING 5 FEET IN DEPTH.
26. EQUIPMENT AND PRODUCTS OTHER THAN THOSE SPECIFIED MAY BE USED PROVIDED PRIOR APPROVAL HAS BEEN OBTAINED FROM THE OWNER IN WRITING PRIOR TO ORDERING OR INSTALLATION. THE CONSTRUCTION SHALL WAIVE ANY CLAIM FOR ADDITIONAL COST RELATED TO THE SUBSTITUTION OF ALTERNATE EQUIPMENT.
27. CONTRACTOR SHALL NOTIFY NORTH CAROLINA "ONE CALL" AT 800-632-4949 AT LEAST 48 HOURS PRIOR TO BEGINNING CONSTRUCTION OR EXCAVATION TO HAVE UTILITIES LOCATED. CONTRACTOR SHALL CONTACT ANY LOCAL UTILITIES THAT PROVIDE THEIR OWN LOCATOR SERVICES INDEPENDENTLY.
28. FIELD TESTING SHALL BE DONE BY AN INDEPENDENT TESTING LABORATORY PAID FOR BY THE OWNER. FURTHER TESTING REQUIRED DUE TO A FAILED TEST WILL BE PAID FOR BY THE CONTRACTOR.
29. THE CONTRACTOR SHALL MAINTAIN AN ALL WEATHER ACCESS FOR EMERGENCY VEHICLES AT ALL TIMES DURING CONSTRUCTION.
30. ALL OUT DOOR LIGHTING SHALL BE INSTALLED SO AS NOT TO SHINE OR REFLECT DIRECTLY ONTO SURROUNDING PROPERTIES.
31. FREESTANDING SIGNS WITHIN THE RIGHT-OF-WAY SHALL BE OF MONUMENT TYPE ONLY. NO POLE SIGNS SHALL BE PERMITTED.
32. THE SUBJECT PROPERTY SHALL BE ALLOWED USES RELATED TO ALL PERMITTED USES WITHIN THE O&I-1 DISTRICT.
33. THE SUBJECT PROPERTY (Phase II) SHALL BE LIMITED TO 3 - 2 BEDROOM RESIDENTIAL UNITS.
34. UNDERGROUND FIRE LINES AND PRIVATE WATER MAINS MUST BE PERMITTED AND INSPECTED BY THE WILMINGTON FIRE DEPARTMENT FROM THE PUBLIC RIGHT OF WAY TO THE BUILDING. CONTACT THE WILMINGTON FIRE DEPARTMENT DIVISION OF FIRE AND LIFE SAFETY AT 910-343-0696 FOR ADDITIONAL INFORMATION.

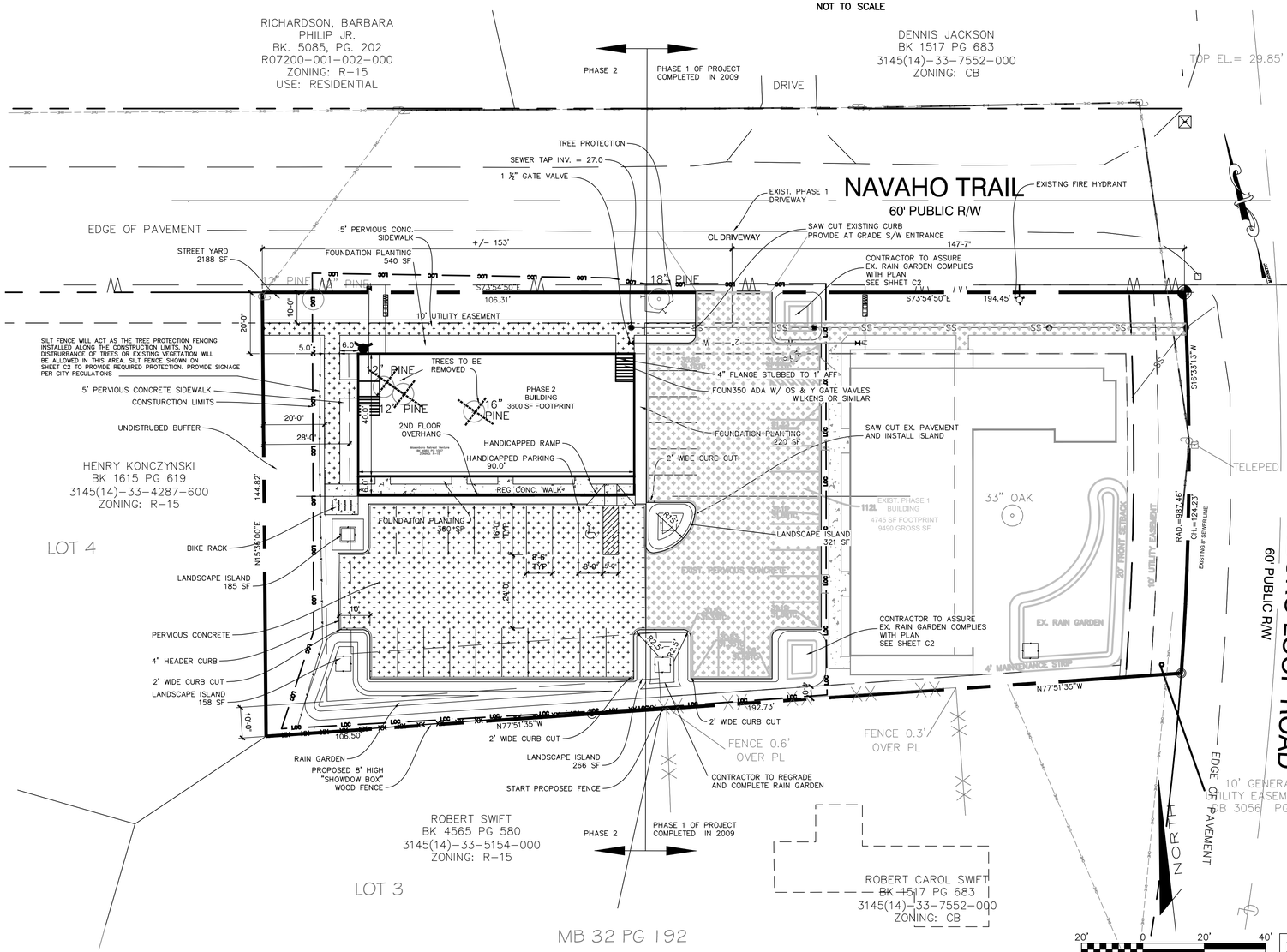

Approved Construction Plan	
Name	Date
Planning	
Public Utilities	
Traffic	
Fire	

STORMWATER MANAGEMENT PLAN
APPROVED
CITY OF WILMINGTON
ENGINEERING DEPARTMENT
DATE _____ PERMIT # _____
SIGNED _____

BEFORE YOU DIG
STOP
CALL 1 800 632-4949
N.C. ONE-CALL CENTER
IT'S THE LAW

LEGEND
PERVIOUS CONC. PAVEMENT
CONC. PAVEMENT

NO WETLAND WITHIN PROJECT AREA

SITE DATA

SUMMARY

PROJECT ADDRESS	1426 NAVAHO TRAIL
PARCEL ID NUMBER	R07205-005-004-000 (BK. 4938, PG. 2554)
EXISTING ZONING	O&I-1 (CONDITIONAL USE) REZONING FILE #CD-6-1107
TOTAL TRACT SIZE	0.60 ACRES
NC BUILDING CODE	VB
OFFICE SPACE PROPOSED	3,600 SF
RESIDENTIAL UNITS PROPOSED	3 (2-BR/1,425 SF EACH)
BUILDING SQUARE FOOTAGE	7,875 SF
FIRST FLOOR:	3,600 SF
SECOND FLOOR:	4,275 SF
CAMA LAND USE CLASSIFICATION	RESOURCE PROTECTION
RAIN GARDEN SURFACE AREA PROPOSED	1160 SF (BOTTOM AREA)

BULK REQUIREMENTS - O&I-1

	REQUIRED	PROVIDED
MIN. LOT AREA:	15,000 SF	15,008 *
MIN. LOT WIDTH:	80'	106' *
MAX. LOT COVERAGE (TOTAL SITE)	40%	45.7%
MIN. FRONT BUILDING SETBACK	20'	20'
MIN. REAR SETBACK ABUTTING R-15	20'	28'
MIN. SIDE SETBACK ABUTTING R-15	20'	28' **
MIN. SIDE CORNER SETBACK	20'	20'
MAX. BUILDING HEIGHT	45'	38'
MAX. BUILT-UPON SURFACE AREA	25%	13,961 SF (33.7%) ***
MAX. DENSITY	2.5 UNITS/AC. 3.23 UNITS/AC ***	

* TO BE COMBINED WITH ADJACENT PARCEL.
** SETBACK MUST BE INCREASED AT 1:1 RATIO FOR BUILDING HEIGHT ABOVE 20' (ADDITIONAL 8' HEIGHT REQUIRES ADDITIONAL 8' SETBACK)
*** RESIDENTIAL IN RESOURCE PROTECTION LAND CLASS MAY EXCEED 25% IMPERVIOUS SURFACE AREA AND 2.5 UNITS/ACRE **IF EXCEPTIONALLY DESIGNED** (ARTICLE 10). SEE NOTES 17-18.

IMPERVIOUS AREAS

PHASE 1		PHASE 2	
BUILDING (UNDER ROOF)	5,237 SF	BUILDING	3,600 SF
REGULAR CONCRETE S/W	550 SF	REGULAR CONCRETE S/W	566 SF
PERVIOUS CONC PARK (5798 SF x 40%)	2,319 SF	PERVIOUS CONC. PARK (5188 SF x 25%)	1,297 SF
PERVIOUS CONC S/W (917 SF x 40%)	247 SF	PERVIOUS CONC WALK (1021 SF x 25%)	255 SF
TOTAL	8,353 SF	TOTAL	5,718 SF

PARKING REQUIREMENTS

	REQUIRED (24 SPACES)	PROPOSED (24 SPACES)
EXISTING BUILDING REQUIREMENTS:		
PROPOSED REQUIREMENTS:		
3 RESIDENTIAL UNITS (1/UNIT) *	3 SPACES	3 SPACES
3,600 SF OFFICE (1/300 SF)	12 SPACES	12 SPACES
TOTAL REQUIRED MIN. PARKING	39 SPACES (2 HC)	39 SPACES (2 HC)
MAX. PARKING	46 SPACES	

* MULTI-FAMILY RESIDENTIAL AS PRESCRIBED CONDITION WITHIN O&I-1 DISTRICT REQUIRES ONE PARKING SPACE PER UNIT (ARTICLE 6, SEC. 18-296)

LANDSCAPE REQUIREMENTS

	REQUIRED (20' (ABUTTING RESIDENTIAL)	PROPOSED (20'/10' WITH 8' PRIVACY FENCE (SECTION 18-499)
LANDSCAPE BUFFER		
STREET YARD		
NAVAHO TRAIL SECONDARY (153'-12' x 9)	1269 SF	2,188 SF
FOUNDATION PLANTING (PHASE 2)		
FRONT 38' x 90' x 12%=	410 SF	540 SF
SIDE 38' x 40' x 12%=	182 SF	182 SF
INTERIOR LANDSCAPING (PHASE 1 AND 2)		
(8% PARKING AREA = 11,994 SF x 0.08	960 SF	1,488 SF

NUMBER	DATE	REVISION
R2	6/20/14	COW SUBMITTAL AFTER TRC MEETING

DESIGN BY: BDS
DRAWN BY: BDS
CHECKED BY: BDS
DATE: MAY, 2014

JBS CONSULTING, PA
7332 Cotesworth Drive
Wilmington, NC 28045
(910) 619-9990
LICENCE # C-2525
PLANNING - ENGINEERING - PROJECT MANAGEMENT

NORTH CAROLINA PROFESSIONAL ENGINEER 025878 BRADFORD SEDGWICK

SITE PLAN

MASONBORO LODGE PHASE 2

WILMINGTON, NORTH CAROLINA COUNTY

WORSLEY INVESTMENT & DEVELOPMENT COMPANY, LLC
1133 MILITARY CUTOFF ROAD, SUITE 100
WILMINGTON, NC 28405
910-256-0044

SHEET
C1
of 3

JOB NO.
051-005

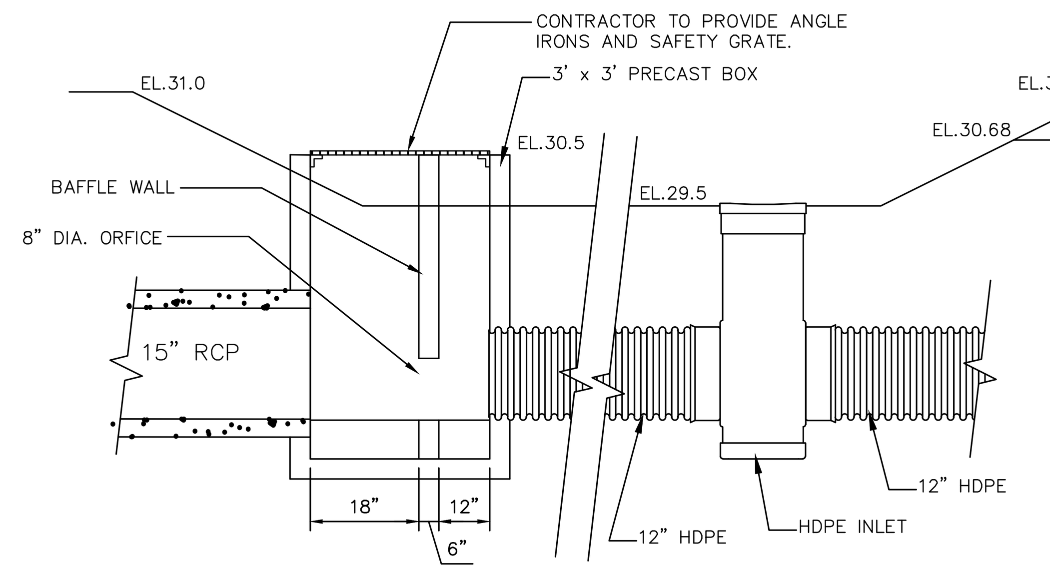

OVERFLOW STRUCTURE

NOT TO SCALE

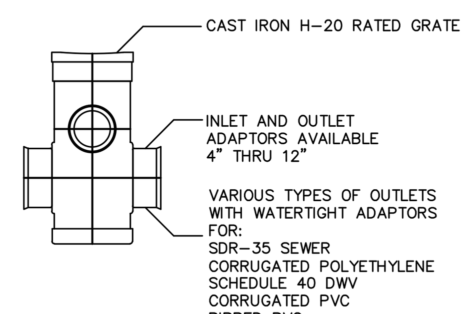

12" DRAIN BASIN

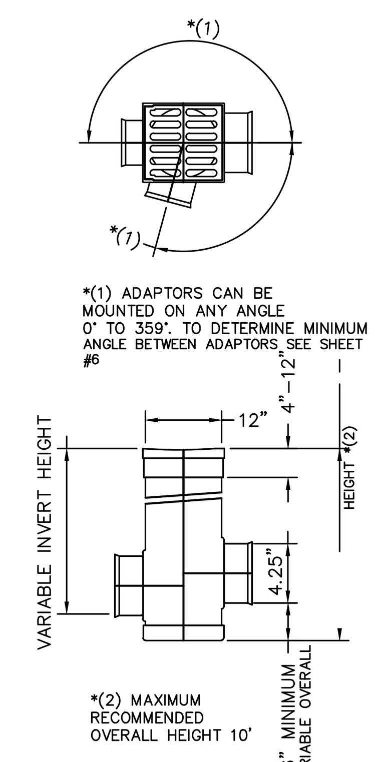

HDPE INLINE DRAIN

NOT TO SCALE

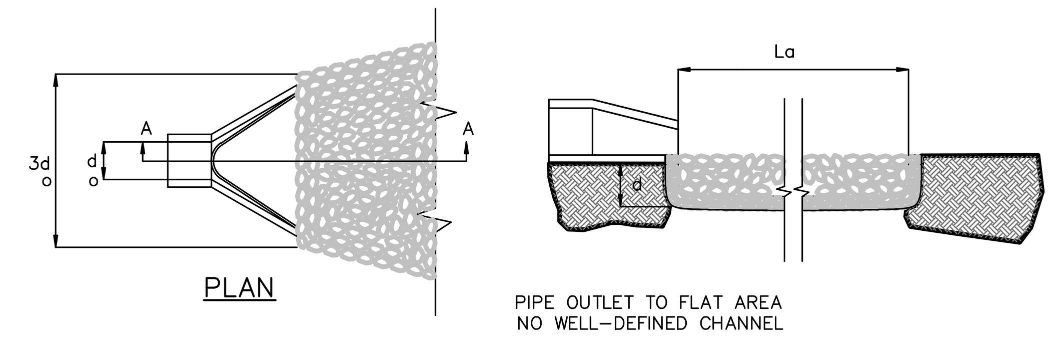

NOTES:

1. La IS THE LENGTH OF THE RIPRAP APRON.
2. d = 1.5 TIMES THE MAXIMUM STONE DIAMETER BUT NOT LESS THAN 6".
3. IN A WELL – DEFINED CHANNEL EXTEND THE APRON UP THE CHANNEL BANKS TO AN ELEVATION OF 6" ABOVE THE MAXIMUM TAILWATER DEPTH OR TO THE TOP OF THE BANK, WHICHEVER IS LESS.
4. A FILTER BLANKET OR FILTER FABRIC SHOULD BE INSTALLED BETWEEN THE RIPRAP AND SOIL FOUNDATION.

PIPE OUTLET PROTECTION

SD 2–15

NOT TO SCALE

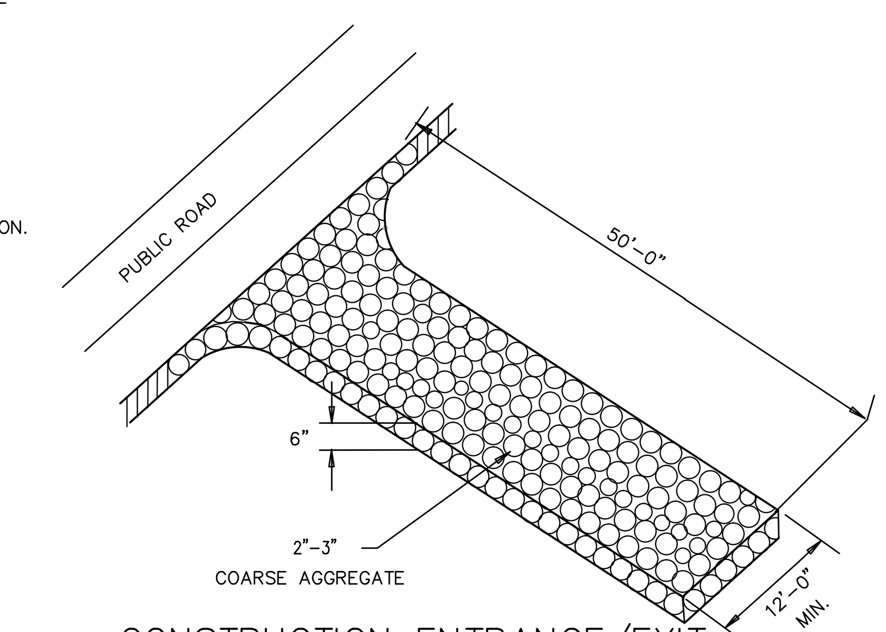

CONSTRUCTION ENTRANCE/EXIT

NOT TO SCALE

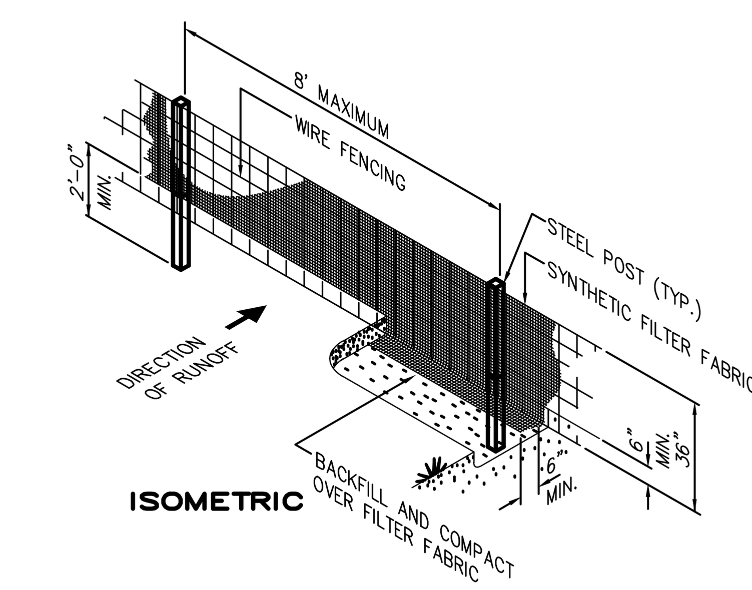

SILT FENCE DETAIL

NOT TO SCALE

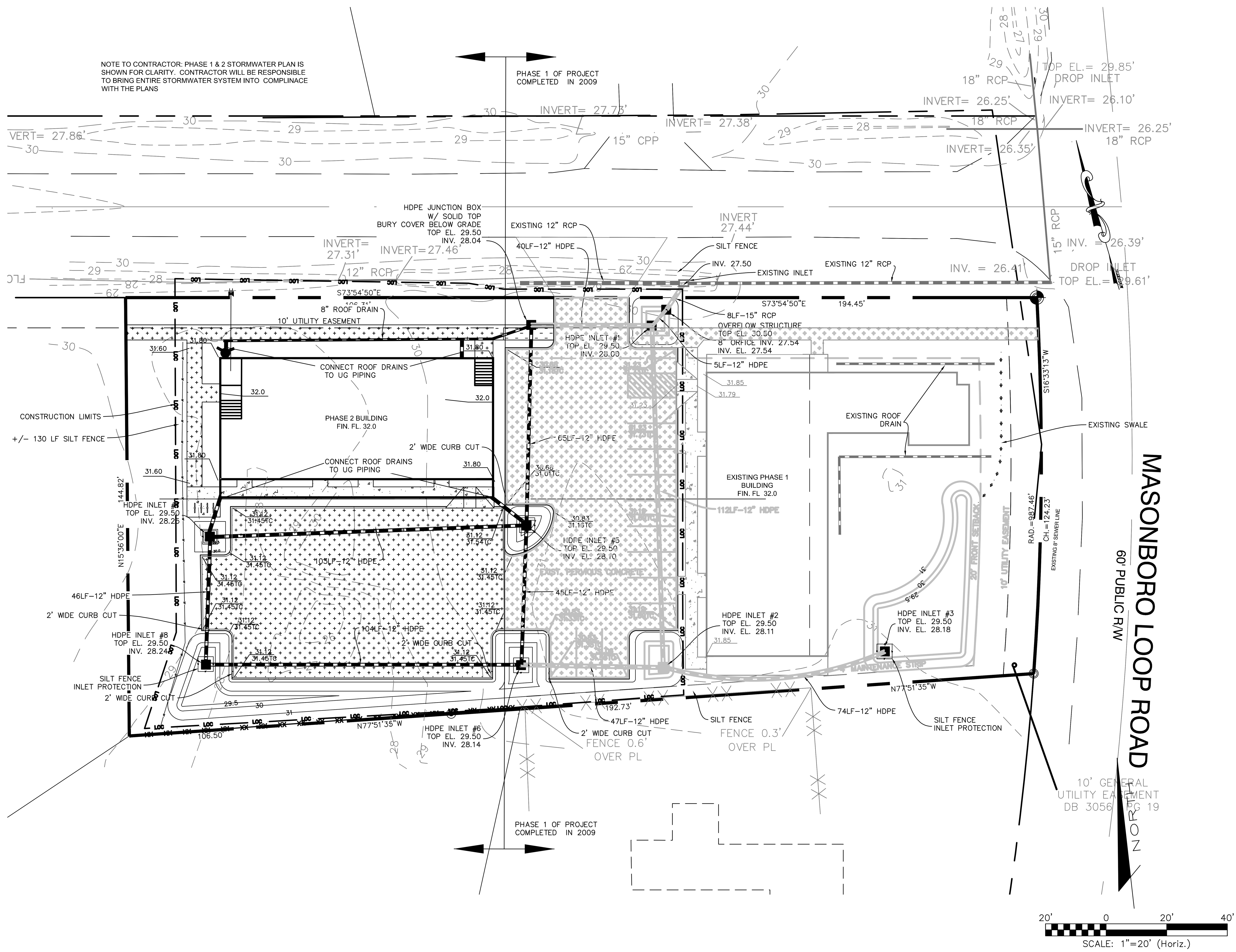

Approved Construction Plan	Name	Date
Planning		
Public Utilities		
Traffic		
Fire		

STORMWATER MANAGEMENT PLAN
APPROVED
CITY OF WILMINGTON
ENGINEERING DEPARTMENT
DATE ________ PERMIT # ________
SIGNED________________________

TEMPORARY SEEDING

GRASS TYPE	AMOUNT/ 1000 S.F.	TIME OF SEEDING	INITIAL
RYE GRAIN	1–2 LBS.	NOV. THRU JAN.	25 LBS. 10–10–10
BROWNTOP MILLET	1–2 LBS.	JUNE THRU AUG.	25 LBS. 10–10–10

PERMANENT SEEDING

GRASS TYPE	AMOUNT/ 1000 S.F.	TIME OF SEEDING	INITIAL
BERMUDA, COMMON	1–2 LBS.	APRIL THRU JUNE	25 LBS. 10–10–10
FESCUE, TALL (KENTUCKY 31)	5–7 LBS.	JUNE THRU AUG. FEB. THRU OCT.	25 LBS. 10–10–10
LESPEDEZA (SLOPES)	1–2 LBS.	MARCH THRU APRIL	25 LBS. 10–10–10

1. SEE EROSION CONTROL SPECIFICATIONS FOR SOIL AMENDMENTS AND MULCH REQUIREMENTS

LEGEND

EXISTING CONTOUR	— — — 5 — — — —
PROPOSED CONTOUR	——— 5 ———
SILT FENCE	——— SF ———
SPOT ELEVATION	20.0
PROPOSED STORMDRAIN PIPE	▬ ▬ ▬

NO WETLAND WITHIN PROJECT AREA

EROSION CONTROL NOTES

1. ANY CONSTRUCTION ACTIVITY BEYOND THE 0.60 ACRES SHOWN ON THE PLAN IS A VIOLATION OF THE EROSION CONTROL ORDINANCE AND MAYBE SUBJECT TO FINES.

2. CONTRACTOR SHALL REMOVE ALL TREES AND VEGETATION WITHIN PROJECT LIMITS UNLESS OTHERWISE DESIGNATED TO REMAIN.

3. CONTRACTOR SHALL RAKE AND REMOVE ROOTS, STUMPS, VEGETATION, DEBRIS, EXISTING STRUCTURES ABOVE AND BELOW GRADE, ORGANIC MATERIAL OR ANY OTHER UNSUITABLE MATERIAL WITH IN THE LIMITS OF CONSTRUCTION.

4. CONTRACTOR SHALL COORDINATE WITH OWNER AND THEIR GEOTECHNICAL REPRESENTATIVE TO COORDINATE REMOVAL OF ANY UNSUITABLE SOILS.

5. CLEARED, GRUBBED, STRIPPED OR OTHER WASTE MATERIALS SHALL BE REMOVED FROM THE SITE AND DISPOSED OF IN A PROPERLY PERMITTED FACILITY.

6. THE CONTRACTOR SHALL FURNISH ANY REQUIRED BORROW MATERIALS FROM A PROPERLY PERMITTED OFF–SITE FACILITY.

7. ALL GRADED SLOPES MUST BE SEEDED AND MULCHED WITHIN 21 CALENDAR DAYS OF COMPLETION OF GRADING. STABILIZE AREAS OTHER THAN SLOPES WITHIN 15 WORKING DAYS OR 90 CALENDAR DAYS, WHICHEVER IS SHORTER.

8. ADDITIONAL MEASURES TO CONTROL EROSION AND SEDIMENT MAY BE REQUIRED BY A REPRESENTATIVE OF THE COUNTY ENGINEERING DEPARTMENT.

9. SLOPES SHALL BE GRADED NO STEEPER THAN 3:1.

10. ADDITIONAL DEVICES MAY BE REQUIRED AS AGREED UPON BY THE FIELD INSPECTOR, ENGINEER, AND OWNER.

11. IF ACTIVE CONSTRUCTION CEASES IN ANY AREA FOR MORE THAN 15 CALENDAR DAYS, ALL DISTURBED AREAS MUST BE SEEDED, MULCHED, AND TACKED UNLESS WRITTEN APPROVAL IS GRANTED BY THE EROSION CONTROL OFFICER.

EROSION CONTROL MAINTENANCE PLAN

1. ALL EROSION AND SEDIMENT CONTROL PRACTICES WILL BE CHECKED FOR STABILITY AND OPERATION FOLLOWING EVERY RUNOFF – PRODUCING RAINFALL BUT IN NO CASE LESS THAN ONCE EVERY WEEK. ANY NEEDED REPAIRS WILL BE MADE IMMEDIATELY TO MAINTAIN ALL PRACTICES AS DESIGNED.

2. SEDIMENT WILL BE REMOVED FROM BEHIND THE SEDIMENT FENCE WHEN IT BECOMES ABOUT 0.5 FEET DEEP AT THE FENCE. THE SEDIMENT FENCE WILL BE REPAIRED OR REPLACED AS NECESSARY TO MAINTAIN A BARRIER.

3. ALL AREAS WILL BE FERTILIZED, RESEEDED AS NECESSARY, AND MULCHED ACCORDING TO SPECIFICATIONS IN THE VEGETATIVE PLAN TO MAINTAIN A VIGOROUS, DENSE VEGETATIVE COVER.

4. GRAVEL CONSTRICTION ENTRANCE TO BE CLEANED WHEN SEDIMENT ACCUMULATIONS ARE VISIBLE OR SEDIMENT IS DEPOSITED ON THE ASPHALT AND STONE WILL BE PERIODICALLY TOP DRESSED WITH 2 INCHES OF #4 STONE TO MAINTAIN 6 INCH DEPTH.

5. DURING THR ESTABLISHMENT PERIOD, CHECK SWALES AFTER EVERY RAINFALL. AFTER GRASS IS ESTABLISHED, PERIODICALLY CHECK IT AND CHECK AFTER EVERY HEAVY RAINFALL EVENT. IMMEDIATELY MAKE REPAIRS. IT IS PARTICULARY IMPORTANT TO CHECK THE SWALE OUTLETS AND ALL ROAD CROSSINGS FOR BANK STABILITY AND EVIDENCE OF PIPING OR SCOUR HOLES. REMOVE ALL SIGNIFICANT SEDIMENT ACCUMULATIONS TO MAINTAIN THE DESIGN CARRYING CAPACITY. KEEP GRASS IN A HEALTHY, VIGOROUS CONDITION AT ALL TIMES, SINCE IT IS THE PRIMARY EROSION PROTECTION FOR THE SWALE.

6. INSPECT INLETS AT LEAST WEEKLY AND AFTER EACH SIGNIFICANT (1½" OR REATER) RAINFALL EVENT. CLEAR THE WIRE OF ANY DEBRIS OR OTHER OBJECTS TO PROVIDE ADEQUATE FLOW FOR SUBSEQUENT RAINS. TAKE CARE NOT TO DAMAGE OR UNDERCUT THE WIRE MESH DURING SEDIMENT REMOVAL. REPLACE STONE AS NEEDED.

GRADING NOTES

1. INITIATE EROSION CONTROL SEQUENCE BEFORE BEGINNING CLEARING AND GRADING OPERATIONS.

2. CLEAR AREAS TO BE GRADED OF ALL VEGETATION. PROTECT VEGETATION BEYOND GRADING LIMITS.

3. STRIP TOPSOIL TO FULL DEPTH IN AREAS TO BE GRADED AND STOCKPILE.

4. COMPACT ALL FILL AREAS TO 95% OF MAXIMUM DENSITY.

5. ALL BANKS AND SWALE SIDE SLOPES SHALL BE GRADED WITH NO GREATER THAN 3:1 SLOPES.

6. ALL AREAS ARE TO BE GRADED SO THAT NO AREAS OF STANDING WATER OCCUR.

7. PROPOSED SPOT ELEVATIONS ARE SHOWN AT FINISHED GRADE.

8. OPERATOR SHALL FIELD VERIFY EXISTING TOPOGRAPHY IN RELATION TO THE PROPOSED GRADES TO ENSURE DRAINAGE IN THE DIRECTIONS INDICATED ON THE PLAN.

CONSTRUCTION SEQUENCE

1. OBTAIN ALL NECESSARY PERMIT APPROVALS PRIOR TO ANY LAND DISTURBING ACTIVITY.

2. HOLD A PRE–CONSTRUCTION MEETING WITH THE EROSION CONTROL INSPECTOR.

3. INSTALL GRAVEL CONSTRUCTION ENTRANCE AND SILT FENCE, COMMENCE CLEARING AND ROUGH GRADING OPERATIONS TO ESTABLISH SWALES AND SEDIMENT BASIN.

4. ROUGH GRADE SITE AND INSTALL UNDERGROUND UTILITIES.

5. PROVIDE TEMPORARY PROTECTION MEASURES AND DEVICES AS REQUIRED UNTIL UNDERGROUND UTILITIES AND PAVEMENT SECTION IS COMPLETE AND FINAL GRADES ARE STABILIZED WITH TEMPORARY VEGETATIVE COVER.

6. STABILIZE (FERTILIZE, SEED, AND MULCH) ALL DISTURBED AREAS AS SOON AS FINAL GRADES ARE ESTABLISHED.

7. ONCE CONSTRUCTION IS COMPLETE AND ALL DISTURBED AREAS ARE STABILIZED, REMOVE TEMPORARY EROSION CONTROL MEASURES.

NUMBER	DATE	REVISION
R2	6/20/14	COW SUBMITTAL AFTER TRC MEETING

DESIGN BY: BDS
DRAWN BY: BDS
CHECKED BY: BDS
DATE MAY, 2014

JBS CONSULTING, PA
7332 Cotesworth Drive
Wilmington, NC 28045
(910) 619-9990
LICENCE NUMBER C-2525
PLANNING - ENGINEERING - PROJECT MANAGEMENT

NORTH CAROLINA PROFESSIONAL SEAL 026378 ENGINEER BRADFORD SEDGWICK

GRADING, DRAINAGE AND EROSION CONTROL

MASONBORO LODGE PHASE 2

WILMINGTON, NORTH CAROLINA COUNTY

WORSLEY INVESTMENT & DEVELOPMENT COMPANY, LLC
1133 MILITARY CUTOFF ROAD, SUITE 100
WILMINGTON, NC 28405
910–256–0044

SHEET C2 of 3

JOB NO. 051–005

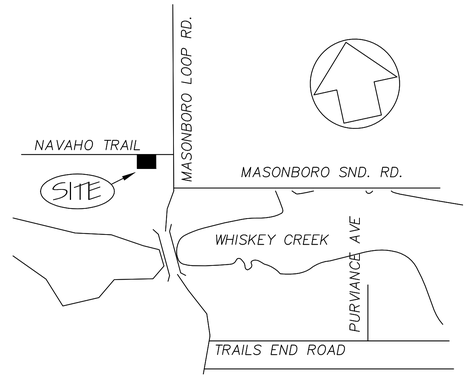

VICINITY MAP

NOTE TO PLAN REVIEWER: THIS PROJECT INCLUDES A FIRE SERVICE MAIN AND A 1" WATER TAP FOR POTABLE WATER. SEWER SERVIE WILL BE PROVIDED BY AND EXISTING 6" SEWER LATERAL INSTALLED UNDER PHASE 1.

NAVAHO TRAIL
60' PUBLIC R/W

PHASE 2
PHASE 1 OF PROJECT COMPLETED IN 2009
ALL WORK SHOWN ON THIS SIDE OF PHASE LINE WERE INSALLED IN PREVIOUS CONTRACT

SSMH TOP EL.= 30.35' INV.= 16.30'
VERT= 27.86'
SEWER LINE
SEWER TAP INV. = 27.0 EXISTING
8" X 4" TAPPING SLEEVE & VALVE
+/- 24 LF 4" C900 WATER MAIN
PROPOSED 1" PHASE 2 WATER SERVICE WATER METER & BFP
4" FLANGE STUBBED TO 1' AFF
90d PATTERN FDC STORZ CONNECTION
FOUN350 ADA W/ OS & Y GATE VAVLES WILKENS OR SIMILAR
INVERT= 27.31'
INVERT=27.46'
12" RCP
EXIST. 8" WATER
S73°54'50"E 106.31'
10' UTILITY EASEMENT
10'-0"
11.5'
RISER ROOM
PHASE 2 BUILDING
144.82'
N15°36'00"E
1-1/2" GATE VALVE EXISTING
INVERT= 27.73'
15" CPP
INVERT= 27.38'
CLEAN OUT
EXIST. 2" PHASE 1 WATER SERVICE WATER METER & BFP
6" DUCTILE 20 LF EITHER SIDE OF WATER SERVICE
INVERT 27.44'
6" SEWER SERVICE (SCH26) @ 1.04% MIN. SLOPE
PHASE 1 EX. F/H
S73°54'50"E 194.45'
EXIST. 2" SCH 21 WATER
2" X 1-1/2" TEE
1-1/2" GATE VALVE
+/-80LF DUCTILE WATER LINE IN BOX
1-1/2" GATE VALVE
EXIST. PHASE 1 BUILDING
EXIST. PHASE 1 SEWER SERVICE
18" RCP
INVERT= 26.25'
18" RCP
TOP EL.= 29.85'
DROP INLET
INVERT= 26.10'
INVERT= 26.25'
18" RCP
8" PVC
INVERT= 26.35'
INV.= 16.57'
TOP EL.= 29.99'
SSMH
15" RCP
INV. = 26.39'
MANHOLE INV = 17.16'
INV. = 26.41'
DROP INLET
TOP EL.= 29.61'
INV OF 6" SERVICE = 25.0
SSMH
TIE TO EXIST. SANITARY SEWER MANHOLE
INV = 7.10
6" SANITARY SERVICE TO MANHOLE
6"X6"X6" WYE WITH CLEANOUT
6"X4" REDUCER
REROUTE PHASE 1 SEWER SERVICE
CLEAN OUT TELEPED
S16°33'13"W
OHE
20' FRONT SETBACK
10' UTILITY EASEMENT
RAD.=1827.46'
CH.=124.23'
EXISTING 8" SEWER LINE
4' MAINTENANCE STRIP
N77°51'35"W
192.73'
106.50'
N77°51'35"W
FENCE 0.6' OVER PL
FENCE 0.3' OVER PL
60' PUBLIC R/W
MASONBORO LOOP ROAD
10' GENERAL UTILITY EASEMENT DB 3056 PG 19
NORTH

20' 0 20' 40'
SCALE: 1"=20' (Horiz.)

NUMBER	DATE	REVISION
#2	6/20/14	COW SUBMITTAL AFTER TRC MEETING

DESIGN BY: BDS
DRAWN BY: BDS
CHECKED BY: BDS
DATE MAY, 2014

JBS CONSULTING, PA
7332 Cotesworth Drive
Wilmington, NC 28045
(910) 619-9990
LICENCE NUMBER C-2525
PLANNING - ENGINEERING - PROJECT MANAGEMENT

NORTH CAROLINA PROFESSIONAL ENGINEER 026578 BRADFORD SEDGWICK

SITE UTILITY PLAN

MASONBORO LODGE PHASE 2
WILMINGTON, NORTH CAROLINA COUNTY

WORSLEY INVESTMENT & DEVELOPMENT COMPANY, LLC
1133 MILITARY CUTOFF ROAD, SUITE 100
WILMINGTON, NC 28405
910-256-0044

SHEET C3 of 4
JOB NO. 051-005

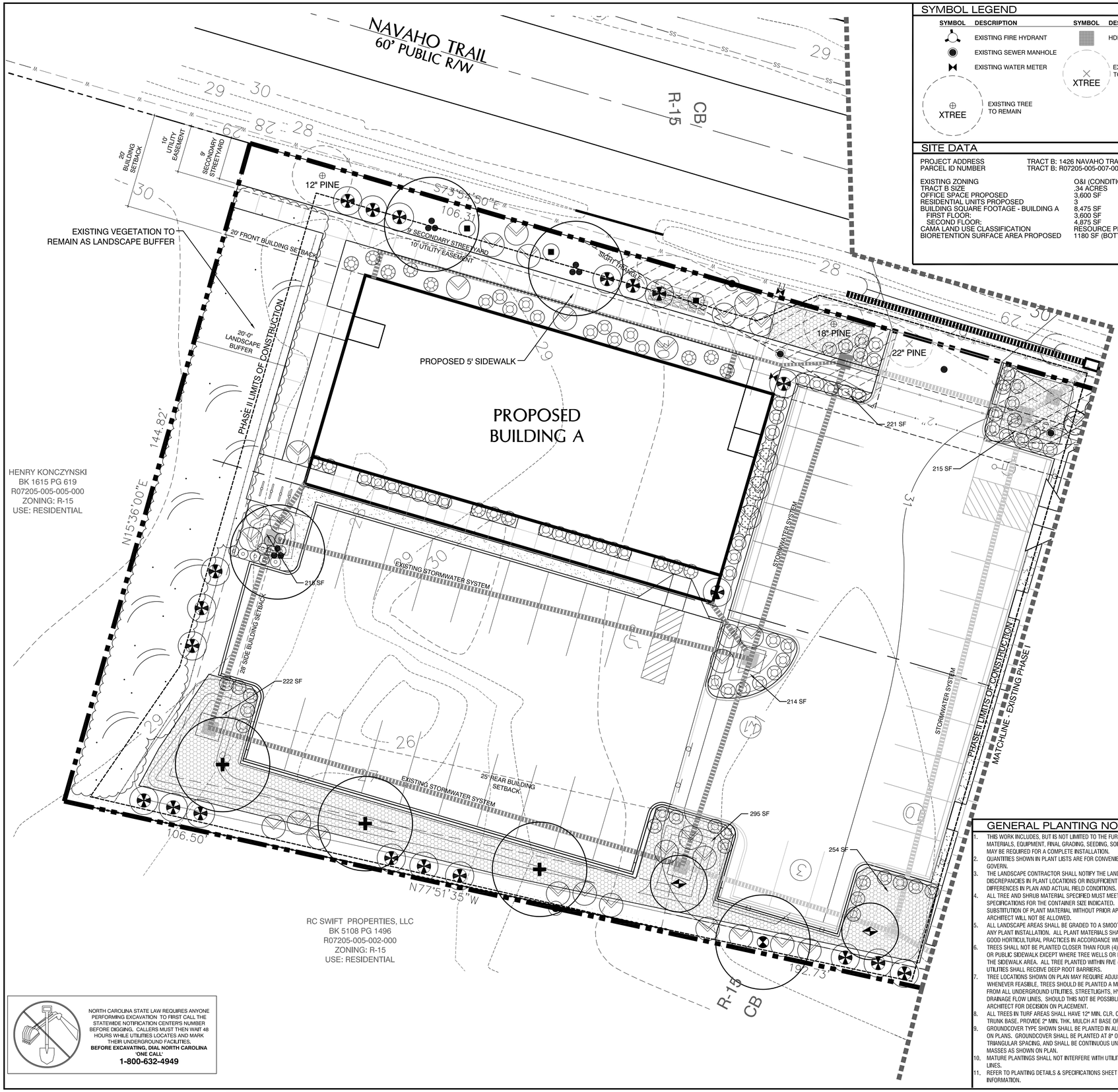

NORTH CAROLINA STATE LAW REQUIRES ANYONE PERFORMING EXCAVATION TO FIRST CALL THE STATEWIDE NOTIFICATION CENTER'S NUMBER BEFORE DIGGING. CALLERS MUST THEN WAIT 48 HOURS WHILE UTILITIES LOCATES AND MARK THEIR UNDERGROUND FACILITIES.
BEFORE EXCAVATING, DIAL NORTH CAROLINA 'ONE CALL'
1-800-632-4949

SYMBOL LEGEND

SYMBOL	DESCRIPTION	SYMBOL	DESCRIPTION
	EXISTING FIRE HYDRANT		HDPE INLET
	EXISTING SEWER MANHOLE	XTREE	EXISTING TREE TO BE REMOVED
	EXISTING WATER METER		
XTREE	EXISTING TREE TO REMAIN		

SITE DATA

PROJECT ADDRESS	TRACT B: 1426 NAVAHO TRAIL (0.34 AC.):
PARCEL ID NUMBER	TRACT B: R07205-005-007-000 (BK. 4965, PG. 1087):
EXISTING ZONING	O&I (CONDITIONAL USE)
TRACT B SIZE	.34 ACRES
OFFICE SPACE PROPOSED	3,600 SF
RESIDENTIAL UNITS PROPOSED	3
BUILDING SQUARE FOOTAGE - BUILDING A	8,475 SF
FIRST FLOOR:	3,600 SF
SECOND FLOOR:	4,875 SF
CAMA LAND USE CLASSIFICATION	RESOURCE PROTECTION
BIORETENTION SURFACE AREA PROPOSED	1180 SF (BOTTOM AREA)

SITE MAP NOT TO SCALE

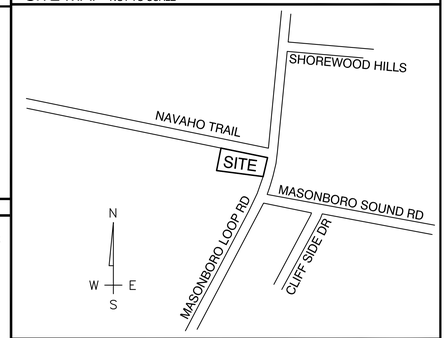

SITE DATA

LANDSCAPE REQUIREMENTS

TRACT A PLANTING & CALCULATIONS PREVIOUSLY APPROVED HAVE NOT BEEN CHANGED. PHASE II PLANTING AND CALCULATIONS ARE SHOWN, ALONG WITH OVERALL TOTALS FOR ENTIRE SITE.

	REQUIRED	PROPOSED
LANDSCAPE BUFFER (PREVIOUSLY APPROVED)	20' (ABUTTING RESIDENTIAL)	20'/10' WITH 8' PRIVACY FENCE (SECTION 18-499)
1 TREE / 30 LF (130 LF BUFFER) =	4 TREES	4 TREES
SECONDARY STREET YARD (TRACT A - PREVIOUSLY APPROVED)		
NAVAHO TRAIL (9 x 116')		
1 SHADE TREE / 600 SF	2 TREES	3 TREES
6 SHRUBS / 600 SF (12" MIN.)	12 SHRUBS	23 SHRUBS
PROPOSED TRACT B		
NAVAHO TRAIL (9 X 159')		
1 SHADE TREE / 600 SF	3 TREES	4 TREES (2 EXISTING)
6 SHRUBS / 600 SF (12" MIN.)	15 SHRUBS	39 SHRUBS
TOTAL SECONDARY STREETYARD		
TREES	5 TREES	7 TREES (2 EXISTING)
SHRUBS	27 SHRUBS	62 SHRUBS
FOUNDATION PLANTING		
EXISTING BUILDING (PHASE I- PREVIOUSLY APPROVED) (12% FACADE AREA = 3,210 SF x 0.12)	385 SF	390 SF
PROPOSED BUILDING A (12% FACADE AREA = 3,640 SF x 0.12)	437 SF	542 SF
INTERIOR LANDSCAPING (8% PARKING AREA = 11,994 SF x 0.08)	960 SF	1,642 SF

PLANTING LEGEND

TREES

SYMBOL	BOTANICAL / COMMON NAME	SIZE	QUANTITY
	ACER R. 'OCTOBER GLORY' 'OCTOBER GLORY' RED MAPLE	**4" CAL** B&B	1
	QUERCUS LAURIFOLIA LAUREL OAK	**4" CAL** B&B	3
	SALIX BABYLONICA WEEPING WILLOW	**2.5" CAL** B&B	3
	TAXODIUM ASCENDENS POND CYPRESS	**25 GAL** B&B	2

SHRUBS / ORNAMENTAL GRASSES / GROUNDCOVER

SYMBOL	BOTANICAL / COMMON NAME	SIZE / SPACING	QUANTITY
	NATIVE SEED MIX (SEE BELOW FOR SPECIFICATION)	**SEED** 15LBS/ACRE	**2,163 SF**
	CLETHRA ALNIFOLIA 'PINK SPIRES' SUMMERSWEET	**3 GAL**	3
	ITEA VIRGINICA VIRIGINA SWEETSPIRE	**3 GAL**	79
	ILEX VOMITORIA YAUPON HOLLY	**15 GAL**	20
	MUHLENBERGIA RIGIDA PURPLE MUHLY	**1 GAL**	10
	MYRICA CERIFICA WAX MYRTLE	**15 GAL**	33
	VIBURNUM TINUS 'COMPACTUM' SPRING BOUQUET LAURUSTINUS	**3 GAL**	16
	TURF LAWN		

NOTE:
- NATIVE SEED MIXTURE SHALL BE NC COASTAL PLAIN RIPARIAN MIX - ERNMX-301 AVAILABLE FROM ERNST CONSERVATION SEEDS, 9006 MERCER PIKE, MEADVILLE, PA 16335, 1-800-873-3321, FAX (814) 336-5191, WWW.ERNSTSEED.COM

GENERAL PLANTING NOTES

1. THIS WORK INCLUDES, BUT IS NOT LIMITED TO THE FURNISHING OF ALL LABOR, MATERIALS, EQUIPMENT, FINAL GRADING, SEEDING, SOIL AMENDMENTS, ETC., AS MAY BE REQUIRED FOR A COMPLETE INSTALLATION.
2. QUANTITIES SHOWN IN PLANT LISTS ARE FOR CONVENIENCE ONLY. PLANS SHALL GOVERN.
3. THE LANDSCAPE CONTRACTOR SHALL NOTIFY THE LANDSCAPE ARCHITECT OF ANY DISCREPANCIES IN PLANT LOCATIONS OR INSUFFICIENT PLANT QUANTITIES DUE TO DIFFERENCES IN PLAN AND ACTUAL FIELD CONDITIONS.
4. ALL TREE AND SHRUB MATERIAL SPECIFIED MUST MEET STANDARD INDUSTRY SPECIFICATIONS FOR THE CONTAINER SIZE INDICATED. DOWNSIZING OR SUBSTITUTION OF PLANT MATERIAL WITHOUT PRIOR APPROVAL OF LANDSCAPE ARCHITECT WILL NOT BE ALLOWED.
5. ALL LANDSCAPE AREAS SHALL BE GRADED TO A SMOOTH EVEN SURFACE PRIOR TO ANY PLANT INSTALLATION. ALL PLANT MATERIALS SHALL BE INSTALLED USING GOOD HORTICULTURAL PRACTICES IN ACCORDANCE WITH THE PLANS AND DETAILS.
6. TREES SHALL NOT BE PLANTED CLOSER THAN FOUR (4) FEET FROM ANY WALKWAY OR PUBLIC SIDEWALK EXCEPT WHERE TREE WELLS OR PARKWAYS ARE PROVIDED IN THE SIDEWALK AREA. ALL TREE PLANTED WITHIN FIVE (5) FEET OF WALKS OR PUBLIC UTILITIES SHALL RECEIVE DEEP ROOT BARRIERS.
7. TREE LOCATIONS SHOWN ON PLAN MAY REQUIRE ADJUSTMENT IN THE FIELD. WHENEVER FEASIBLE, TREES SHOULD BE PLANTED A MINIMUM OF TEN (10) FEET FROM ALL UNDERGROUND UTILITIES, STREETLIGHTS, HYDRANTS, AND OUT OF DRAINAGE FLOW LINES. SHOULD THIS NOT BE POSSIBLE, CONTACT THE LANDSCAPE ARCHITECT FOR DECISION ON PLACEMENT.
8. ALL TREES IN TURF AREAS SHALL HAVE 12" MIN. CLR. CIRCUMFERENCE AROUND THE TRUNK BASE. PROVIDE 2" MIN. THK. MULCH AT BASE OF TRUNK.
9. GROUNDCOVER TYPE SHOWN SHALL BE PLANTED IN ALL SHRUB AREAS AS SPECIFIED ON PLANS. GROUNDCOVER SHALL BE PLANTED AT 8" ON- CENTER UNIFORM TRIANGULAR SPACING, AND SHALL BE CONTINUOUS UNDER ALL TREE AND SHRUB MASSES AS SHOWN ON PLAN.
10. MATURE PLANTINGS SHALL NOT INTERFERE WITH UTILITIES AND TRAFFIC SIGHT LINES.
11. REFER TO PLANTING DETAILS & SPECIFICATIONS SHEET L2.1 FOR ADDITIONAL INFORMATION.

NORTH

0 10 20 30 40

SCALE: 1" = 10'

MIHALY
LAND DESIGN
PLANNING + LANDSCAPE ARCHITECTURE
330 Military Cutoff Rd. Suite A3
Wilmington, NC 28403 910.392.4355

NORTH CAROLINA REGISTERED LANDSCAPE ARCHITECT 1314 JOSHUA W. MIHALY

CLIENT
WORSLEY REAL ESTATE
1133 MILITARY CUTOFF ROAD, SUITE 100
WILMINGTON, NC 28405
CONTACT: EARL WORSLEY
EWORLSEY@WORLSEYREALESTATE.COM

PROJECT
MASONBORO LODGE PHASE II
MASONBORO LOOP ROAD
WILMINGTON, NC
LANDSCAPE PLAN

Date: 06/01/14
Phase: CONSTRUCTION
Job Number: 340-04
Designed by: JWM
Drawn by: GCD
Checked by: JWM

Sheet Title:
PHASE II
PLANTING PLAN

Sheet Number
L1.1
of 1 sheets