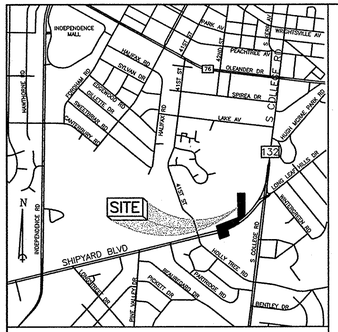

LOCATION MAP NTS

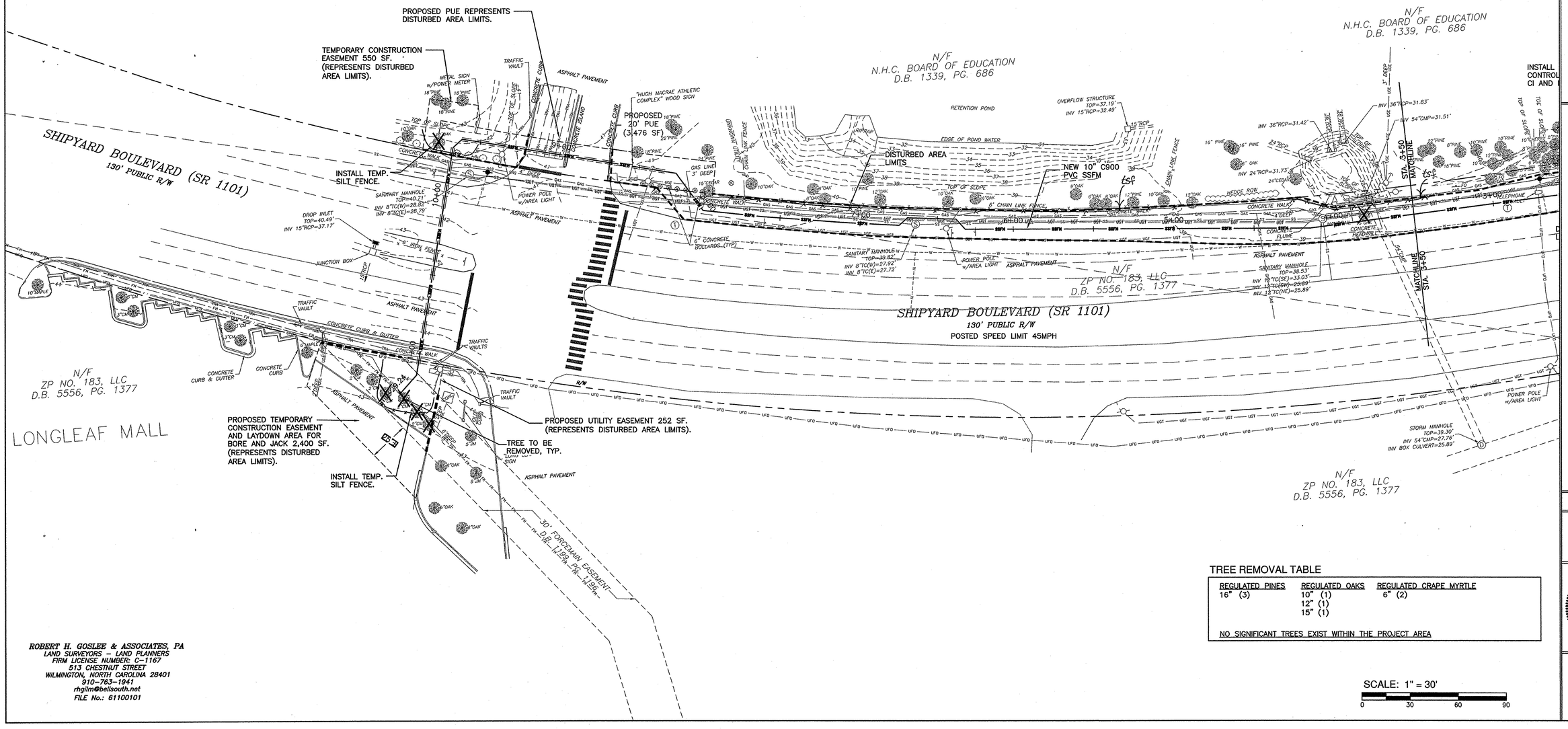

TREE REMOVAL TABLE

REGULATED PINES	REGULATED OAKS	REGULATED CRAPE MYRTLE
16" (3)	10" (1)	6" (2)
	12" (1)	
	15" (1)	

NO SIGNIFICANT TREES EXIST WITHIN THE PROJECT AREA

SCALE: 1" = 30'

0 30 60 90

ROBERT H. GOSLEE & ASSOCIATES, PA
LAND SURVEYORS – LAND PLANNERS
FIRM LICENSE NUMBER: C-1167
513 CHESTNUT STREET
WILMINGTON, NORTH CAROLINA 28401
910-763-1941
rhgilm@bellsouth.net
FILE No.: 61100101

SYMBOL	DATE	DESCRIPTION	BY

REVISIONS

©2015 NORRIS & TUNSTALL

EROSION CONTROL AND TREE REMOVAL PLAN
PUMP STATION 8 DESIGN
SHIPYARD BOULEVARD
NEW HANOVER COUNTY
WILMINGTON, N. C.

OWNER/DEVELOPER
CFPUA
JEFF THEBERGE
PROJECT MANAGER
235 GOVERNMENT CENTER DR.
WILMINGTON, NC 28403
910 332-6673

NORRIS & TUNSTALL
CONSULTING ENGINEERS, P.C.
902 MARKET STREET
WILMINGTON, NC 28401
PHONE (910) 343-9653
FAX (910) 343-9604
office@nkteng.com
licence #C-3641

15048

DES. JST
CKD. JPN
DRWN. NKS
DATE 6/28/16

NORTH CAROLINA PROFESSIONAL SEAL 19851 ENGINEER JOHN S. TUNSTALL

C1

F:\Projects\2015\15048 PS8 Design (Task 2)\15048 Plans\dwg\15048.master.r4.dwg, 6/28/2016 2:11:16 PM

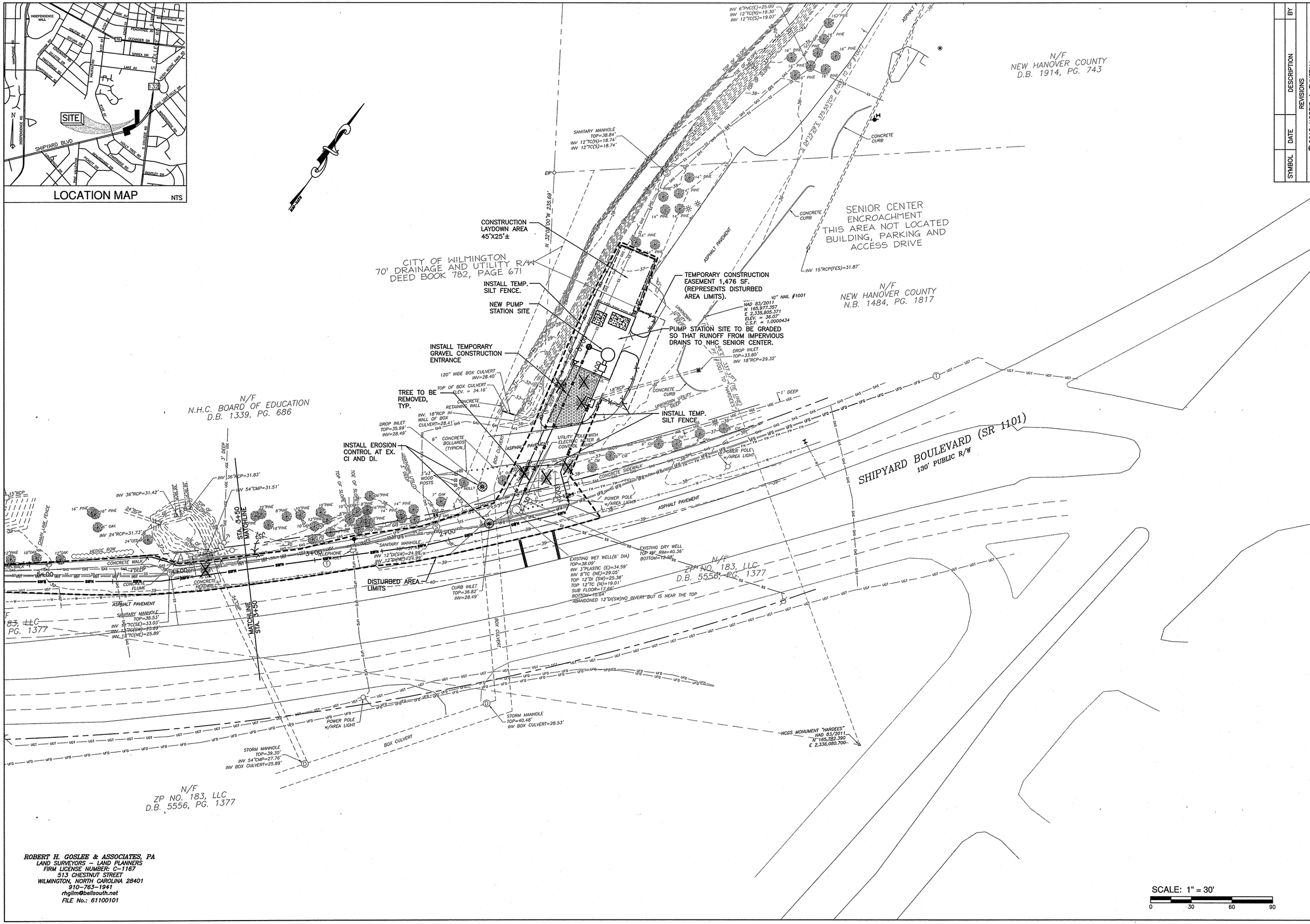

ROBERT H. GOSLEE & ASSOCIATES, PA
LAND SURVEYORS – LAND PLANNERS
FIRM LICENSE NUMBER: C-1167
513 CHESTNUT STREET
WILMINGTON, NORTH CAROLINA 28401
910-763-1941
rhgilm@bellsouth.net
FILE No.: 61100101

SYMBOL	DATE	DESCRIPTION	BY
		REVISIONS	

© 2015 NORRIS & TUNSTALL

EROSION CONTROL AND TREE REMOVAL PLAN
PUMP STATION 8 DESIGN
SHIPYARD BOULEVARD
NEW HANOVER COUNTY
WILMINGTON, N. C.

OWNER/DEVELOPER
CFPUA
JEFF THEBERGE
PROJECT MANAGER
235 GOVERNMENT CENTER DR.
WILMINGTON, NC 28403
910 332-6673

NORRIS & TUNSTALL
CONSULTING ENGINEERS, P.C.
902 MARKET STREET
WILMINGTON, NC 28401
PHONE (910) 343-9653
FAX (910) 343-9604
office@nteng.com
licence #C-3641

15048

DES.	JST
CKD.	JPN
DRWN.	NKS
DATE	6/28/16

NORTH CAROLINA PROFESSIONAL SEAL 19851 ENGINEER JOHN S. TUNSTALL

C2

F:\Projects\2015\15048 PSB Design (Task 2)\15048 Plans\dwg\15048.master.r4.dwg, 6/28/2016 2:21:11 PM

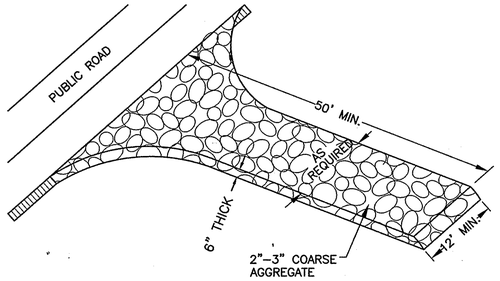

NOT TO SCALE

1 TEMPORARY GRAVELLED CONSTRUCTION ENTRANCE

2

3 CONSTRUCTION SEQUENCE

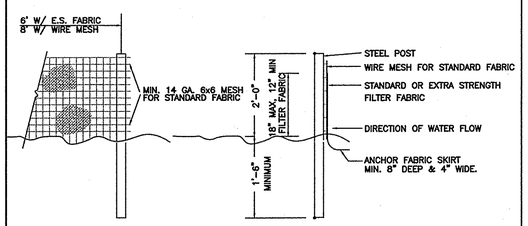

NOTES:

1. SYN. FENCE FABRIC SHALL BE MIN. OF 30" IN WIDTH WITH 30 LB/IN TENSILE STRENGTH FOR STANDARD FABRIC AND 50 LB/IN FOR EXTRA STRENGTH.
2. FABRIC SHALL BE CONTINUOUS LENGTH. IF JOINTS ARE NECESSARY, LAP FABRIC POST TO POST.
3. STEEL POST SHALL BE MIN 4' IN HEIGHT AND BE OF THE SELF-FASTENER STEEL ANGLE TYPE.

NOT TO SCALE

4 TEMPORARY SILT FENCE

5

6

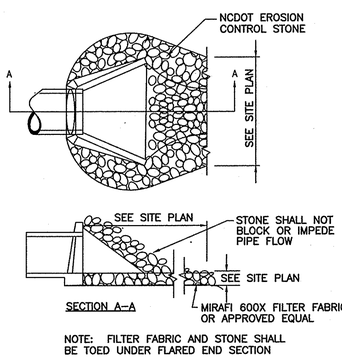

NOTE: FILTER FABRIC AND STONE SHALL BE TOED UNDER FLARED END SECTION

NOT TO SCALE

7 ENERGY DISSIPATOR

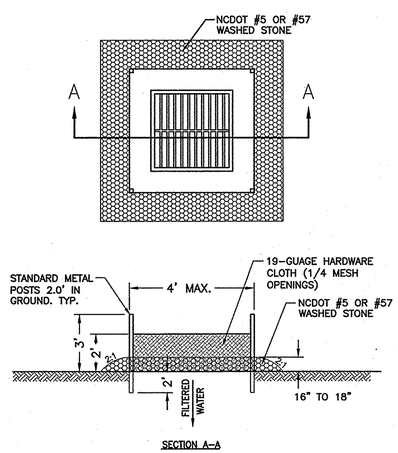

CONSTRUCTION SEQUENCE:

1. UNIFORMLY GRADE A SHALLOW DEPRESSION APPROACHING THE INLET.
2. DRIVE 5' STEEL POST 2' INTO THE GROUND SURROUNDING THE INLET. SPACE POST EVENLY AROUND THE PERIMETER OF THE INLET, A MAXIMUM OF 4' APART.
3. SURROUND THE POST WITH WIRE MESH HARDWARE CLOTH. SECURE THE WIRE MESH TO THE STEEL POST AT THE TOP, MIDDLE AND BOTTOM. PLACING A 2' FLAP OF THE WIRE MESH UNDER THE GRAVEL FOR ANCHORING IS RECOMMENDED.
4. PLACE CLEAN GRAVEL (NCDOT #5 OR #57 STONE) ON A 2:1 SLOPE WITH A HEIGHT OF 16" AROUND THE WIRE, AND SMOOTH TO AN EVEN GRADE.
5. ONCE THE CONTRIBUTING DRAINAGE AREA HAS BEEN STABILIZED, REMOVE ACCUMULATED SEDIMENT, AND ESTABLISH FINAL GRADING ELEVATIONS.
6. COMPACT THE AREA PROPERLY AND STABILIZE IT WITH GROUNDCOVER.

MAINTENANCE:

INSPECT INLETS AT LEAST WEEKLY AND AFTER EACH SIGNIFICANT (1/2 INCH OR GREATER) RAINFALL EVENT. CLEAR THE MESH WIRE OF ANY DEBRIS OR OTHER OBJECTS TO PROVIDE ADEQUATE FLOW FOR SUBSEQUENT RAINS. TAKE CARE NOT TO DAMAGE OR UNDERCUT THE WIRE MESH DURING SEDIMENT REMOVAL. REMOVE SEDIMENT WHEN ACCUMULATION REACHES HALF THE DEPTH OF ROCK. REPLACE STONE WHEN IT NO LONGER DRAINS AS DESIGNED.

NOT TO SCALE

8 HARDWARE CLOTH AND GRAVEL INLET PROTECTION

EROSION CONTROL NOTES AND MAINTENANCE PLAN:

1. ALL EROSION AND SEDIMENT CONTROL MEASURES WILL BE CHECKED FOR STABILITY AND OPERATION FOLLOWING EVERY RUNOFF–PRODUCING RAINFALL, BUT IN NO CASE, LESS THAN ONCE EVERY WEEK AND WITHIN 24 HOURS OF EVERY HALF–INCH RAINFALL.

2. ALL POINTS OF EGRESS WILL HAVE CONSTRUCTION ENTRANCES THAT WILL BE PERIODICALLY TOP–DRESSED WITH AN ADDITIONAL 2 INCHES OF #4 STONE TO MAINTAIN PROPER DEPTH. THEY WILL BE MAINTAINED IN A CONDITION TO PREVENT MUD OR SEDIMENT FROM LEAVING THE SITE. IMMEDIATELY REMOVE OBJECTIONABLE MATERIAL SPILLED WASHED OR TRACKED ONTO THE CONSTRUCTION ENTRANCE OR ROADWAYS.

3. SEDIMENT WILL BE REMOVED FROM HARDWARE CLOTH AND GRAVEL INLET PROTECTION, BLOCK AND GRAVEL INLET PROTECTION, ROCK DOUGHNUT INLET PROTECTION AND ROCK PIPE INLET PROTECTION WHEN THE DESIGNED STORAGE CAPACITY HAS BEEN HALF FILLED WITH SEDIMENT. ROCK WILL BE CLEANED OR REPLACED WHEN THE SEDIMENT POOL NO LONGER DRAINS AS DESIGNED. DEBRIS WILL BE REMOVED FROM THE ROCK AND HARDWARE CLOTH TO ALLOW PROPER DRAINAGE. SILT SACKS WILL BE EMPTIED ONCE A WEEK AND AFTER EVERY RAIN EVENT. SEDIMENT WILL BE REMOVED FROM AROUND WATTLES, BEAVER DAMS, DANDY SACKS AND SOCKS ONCE A WEEK AND AFTER EVERY RAIN EVENT.

4. DIVERSION DITCHES WILL BE CLEANED OUT IMMEDIATELY TO REMOVE SEDIMENT OR OBSTRUCTIONS FROM THE FLOW AREA. THE DIVERSION RIDGES WILL ALSO BE REPAIRED. SWALES MUST BE TEMPORARILY STABILIZED WITHIN 21 CALENDAR DAYS OF CEASE OF ANY PHASE OF ACTIVITY ASSOCIATED WITH A SWALE.

5. SEDIMENT WILL BE REMOVED FROM BEHIND THE SEDIMENT FENCE WHEN IT BECOMES HALF FILLED. THE SEDIMENT FENCE WILL BE REPAIRED AS NECESSARY TO MAINTAIN A BARRIER. STAKES MUST BE STEEL. STAKE SPACING WILL BE 6 FEET MAX. WITH THE USE OF EXTRA STRENGTH FABRIC, WITHOUT WIRE BACKING. STAKE SPACING WILL BE 8 FEET MAX. WHEN STANDARD STRENGTH FABRIC AND WIRE BACKING ARE USED. IF ROCK FILTERS ARE DESIGNED AT LOW POINTS IN THE SEDIMENT FENCE, THE ROCK WILL BE REPAIRED OR REPLACED IF IT BECOMES HALF–FULL OF SEDIMENT, NO LONGER DRAINS AS DESIGNED OR IS DAMAGED.

6. LAND QUALITY REQUIRES:
ALL SEEDED AREAS WILL BE FERTILIZED, RESEEDED AS NECESSARY, AND MULCHED, ACCORDING TO SPECIFICATIONS IN THE VEGETATIVE PLAN, TO MAINTAIN A VIGOROUS, DENSE VEGETATIVE COVER. ALL SLOPES WILL BE STABILIZED WITHIN 21 CALENDAR DAYS. ALL OTHER AREAS WILL BE STABILIZED WITHIN 15 WORKING DAYS.
WATER QUALITY REQUIRES:
ALL SEEDED AREAS WILL BE FERTILIZED, RESEEDED AS NECESSARY AND MULCHED ACCORDING TO SPECIFICATIONS IN THE VEGETATIVE PLAN TO MAINTAIN A VIGOROUS, DENSE VEGETATIVE COVER. ALL PERIMETER DIKES, SWALES, DITCHES, PERIMETER SLOPES, ALL SLOPES STEEPER THAN 3' HORIZONTAL TO 1' VERTICAL (3:1) AND ALL HIGH QUALITY WATER (HQW) ZONES SHALL BE PROVIDED TEMPORARY OR PERMANENT STABILIZATION WITH GROUND COVER AS SOON AS PRACTICABLE BUT IN ANY EVENT WITHIN SEVEN (7) CALENDAR DAYS FROM THE LAST LAND–DISTURBING ACTIVITY. ALL OTHER DISTURBED AREAS SHALL BE PROVIDED TEMPORARY OR PERMANENT STABILIZATION WITH GROUND COVER AS SOON AS PRACTICABLE BUT IN ANY EVENT WITHIN FOURTEEN (14) CALENDAR DAYS FROM THE LAST LAND–DISTURBING ACTIVITY.

TEMPORARY/PERMANENT GRASS SPECIFICATION:

1. CHISEL COMPACTED AREAS AND SPREAD TOPSOIL 3 INCHES DEEP OVER ADVERSE SOIL CONDITIONS.

2. RIP THE ENTIRE AREA TO A 6 INCH DEPTH.

3. REMOVE ALL ROCKS, ROOTS AND OTHER OBSTRUCTIONS LEAVING SURFACES SMOOTH AND UNIFORM.

4. APPLY AGRICULTURAL LIME AND FERTILIZER UNIFORMLY AND MIX WITH SOIL.
LIME: 45 LBS. PER 1000 S.F.
PHOSPHOROUS: 20 LBS PER 1000 S.F.
FERTILIZER: 17 LBS. PER 1000 S.F.

5. CONTINUE TILLAGE UNTIL A WELL PULVERIZED, FIRM, UNIFORM SEED BED IS PREPARED 4–6 INCHES DEEP.

6. SEED ON A FRESHLY PREPARED SEED BED AND COVER SEED LIGHTLY.
2 – 3 LBS PER 1000 S.F. (SEE MIXTURE BELOW)

7. MULCH IMMEDIATELY AFTER SEEDING AND ANCHOR MULCH.
GRAIN STRAW & HAY AT 75 TO 100 LBS PER 1000 S.F.
WOOD CHIPS AT 500 LBS. PER 1000 S.F.
JUTE & MESH AS PER MANUFACTURER

8. ASPHALT FOR ANCHORING MULCH SHALL BE TYPE SS–1 EMULSION AND APPLIED AT A RATE OF 1000 GAL. PER ACRE FOR SLOPE STABILIZATION, AND 150 GAL. PER TON OF STRAW FOR ANCHORING STRAW.

9. INSPECT ALL SEEDED AREAS AND MAKE NECESSARY REPAIRS OR RESEED WITHIN THE PLANTING SEASON, IF POSSIBLE. IF GRASS STAND SHOULD BE OVER 60% DAMAGED, REESTABLISH FOLLOWING ORIGINAL LIME, FERTILIZER AND SEEDING RATES.

10. CONSULT CONSERVATION INSPECTOR ON MAINTENANCE, TREATMENT, AND FERTILIZATION AFTER PERMANENT COVER IS ESTABLISHED.

11. SEED FOR TEMPORARY AND PERMANENT APPLICATIONS SHALL BE:

20%	CARPET GRASS
28%	BERMUDA GRASS
20%	TURF FESCUE
10%	CREEPING RED FESCUE
20%	ANNUAL RYE GRAIN

*BERMUDA SEED SHALL BE HULLED FOR WARM WEATHER PLANTING. PURITY OF SEED SHALL BE A MIN. OF 98% AND GERMINATION SHALL BE A MIN. OF 85%.

ALL DISTURBED AREA SHALL BE SEEDED WITHIN 7–14 DAYS OF THE COMPLETION OF GRADING. SEE EROSION CONTROL AND MAINTENANCE NOTES. CONSULT CONSERVATION ENGINEER OR SOIL CONSERVATION SERVICE FOR ADDITIONAL INFORMATION CONCERNING OTHER ALTERNATIVES FOR VEGETATION OF DENUDED AREAS. THE ABOVE VEGETATION RATES ARE THOSE WHICH DO WELL UNDER LOCAL CONDITIONS, OTHER SEEDING SCHEDULES MAY BE POSSIBLE.

SITE WORK NOTES:

1. THE CONTRACTOR SHALL VISIT THE SITE TO BECOME FAMILIAR WITH FIELD CONSTRUCTION CONDITIONS.

2. CONTRACTOR SHALL COORDINATE WORK WITHIN NCDOT AND LOCAL RIGHT OF WAYS WITH PROPER AUTHORITIES AND SHALL MEET ANY REQUIREMENTS AS TO TRAFFIC CONTROL AND CONNECTION TO EXISTING STREETS.

3. EARTH WORK AND GRADING: SEE PROJECT SPECIFICATIONS.

4. LAYOUT: THE CONTRACTOR SHALL PROVIDE ALL LAYOUT REQUIRED TO CONSTRUCT HIS WORK.

5. THE CONTRACTOR IS RESPONSIBLE FOR THE LOCATION AND PROTECTION OF EXISTING UTILITIES DURING CONSTRUCTION.

6. EXISTING BOUNDARY AND TOPOGRAPHIC INFORMATION FROM SURVEY BY ROBERT H. GOSLEE AND ASSOC. AND PROVIDED BY OWNER.

7. THE CONTRACTOR SHALL VERIFY DIMENSIONS AT JOBSITE.

8. THE CONTRACTOR IS RESPONSIBLE FOR THE COORDINATION OF RELOCATION OR DISCONNECTION OF ALL EXISTING UTILITIES WITH APPLICABLE AGENCIES AND AUTHORITIES.

9. ALL PAVEMENT AND BASE MATERIALS AND WORKMANSHIP SHALL CONFORM TO NCDOT STANDARDS.

10. ALL AREAS SHALL BE GRADED FOR POSITIVE DRAINAGE.

11. SEE SOILS REPORT FOR ADDITIONAL REQUIREMENTS.

CALL 811 (3) WORKING DAYS BEFORE YOU DIG.

For each open utility cut of City streets, a $325 permit shall be required from the City prior to occupancy and/or project acceptance.

CITY OF WILMINGTON NORTH CAROLINA
Public Services • Engineering Division
APPROVED STORMWATER MANAGEMENT PLAN
Date:_____ Permit #_____
Signed: _____

Approved Construction Plan

	Name	Date
Planning		
Traffic		
Fire		

SYMBOL	DATE	DESCRIPTION	BY

REVISIONS

© 2014 NORRIS & TUNSTALL

NOTES AND DETAILS
PUMP STATION 8 DESIGN
SHIPYARD BOULEVARD
NEW HANOVER COUNTY
WILMINGTON, N. C.

OWNER/DEVELOPER
CFPUA
JEFF THEBERGE
PROJECT MANAGER
235 GOVERNMENT CENTER DR.
WILMINGTON, NC 28403
910 332-6673

NORRIS & TUNSTALL
CONSULTING ENGINEERS, P.C.
902 MARKET STREET
WILMINGTON, NC 28401
PHONE (910) 343–9653
FAX (910) 343–9604
office@nteng.com
licence #C-3641

15048

DES.	JST
CKD.	JPN
DRWN.	NKS
DATE	6/28/16

NORTH CAROLINA PROFESSIONAL SEAL 19851 ENGINEER JOHN S. TUNSTALL

C3

F:\Projects\2015\15048 PS8 Design (Task 2)\15048 Plans\dwg\15048-master-4.dwg, 6/28/2016 2:12:03 PM

CAPE FEAR PUBLIC UTILITY AUTHORITY
PUMP STATION 8 DESIGN

CFPUA CIP #14S283
CFPUA MAP #131611.002
SHIPYARD BOULEVARD
NEW HANOVER COUNTY
WILMINGTON, N. C.
28 JULY 2016

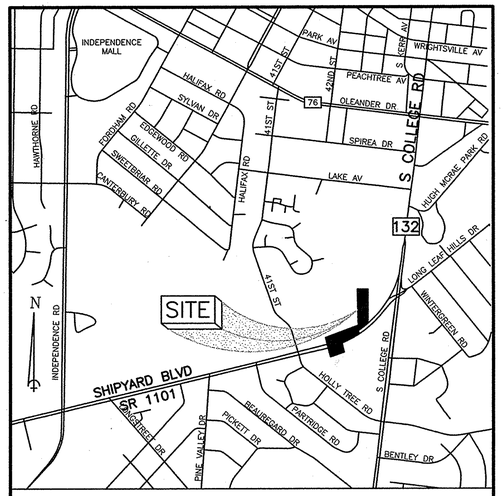

LOCATION MAP NTS

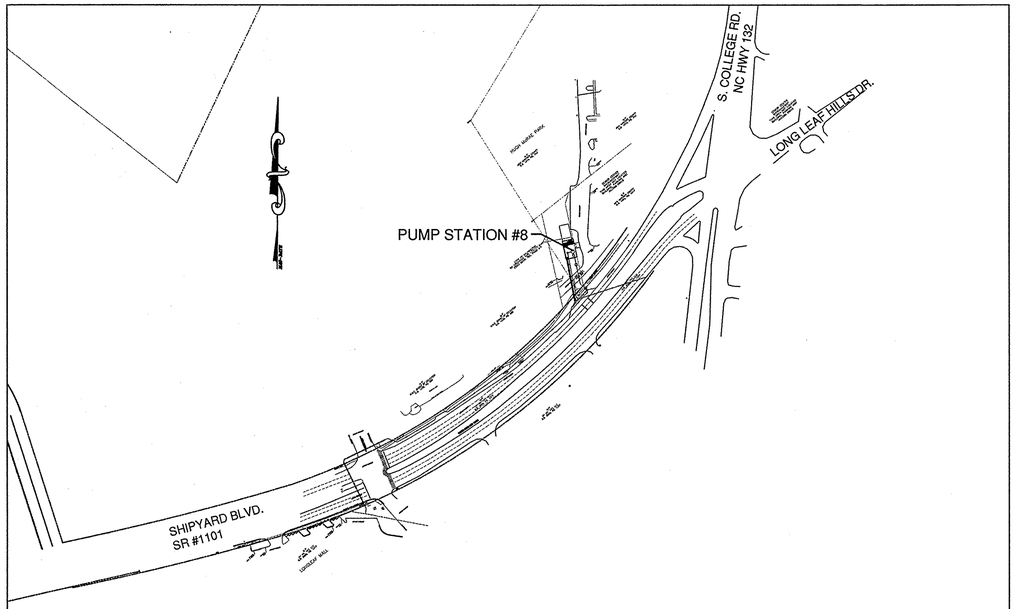

SCALE: 1" = 200'

DESIGN TEAM:

LEAD DESIGN ENGINEER
NORRIS & TUNSTALL
CONSULTING ENGINEERS, P.C.

902 MARKET STREET PHONE (910) 343-9653
WILMINGTON, NC 28401 FAX (910) 343-9604
office@nkteng.com
licence #C-3641

OWNER
CFPUA
JEFF THEBERGE PROJECT MANAGER
235 GOVERNMENT CENTER DR.
WILMINGTON, NC 28403
910 332-6673

ELECTRICAL
CHEATHAM & ASSOCIATES, PA
CONSULTING ENGINEERS
3412 ENTERPRISE DRIVE
WILMINGTON, NC 28405
910 452-4210

SURVEYOR
ROBERT H. GOSLEE & ASSOCIATES, PA
LAND SURVEYORS – LAND PLANNERS
FIRM LICENSE NUMBER: C-1167
513 CHESTNUT STREET
WILMINGTON, NORTH CAROLINA 28401
910-763-1941
rhgilm@bellsouth.net
FILE No.: 61100101

PROJECT LEGEND

	RIGHT-OF-WAY
	DISTURBED AREA LIMITS
	PROPOSED EASEMENT
	TEMPORARY SILT FENCE
	PROPOSED GRAVITY SEWER
	PROPOSED FORCEMAIN
X 29.00	PROPOSED FINISH GRADE SPOT ELEVATION
	INLET PROTECTION
49	EXISTING CONTOUR
16"PINE	EXISTING TREE TO BE SAVED
16"PINE	EXISTING TREE TO BE REMOVED

SURVEY LEGEND

	RIGHT OF WAY
	EDGE OF PAVEMENT LINE
	EASEMENT LINE
	FENCE
	GUARD RAIL
	OVERHEAD POWER LINE
	UNDERGROUND CABLE TV LINE
	UNDERGROUND ELECTRIC LINE
	UNDERGROUND FIBER OPTIC LINE
	UNDERGROUND GAS LINE
	UNDERGROUND TELEPHONE
	UNDERGROUND TRAFFIC SIGNAL
	UNDERGROUND WATER LINE
	STORM SEWER PIPE
	SANITARY SEWER PIPE
	FORCE MAIN PIPE
	UNDERGROUND TRAFFIC LINE

INDEX OF SHEETS

COVER SHEET
C1: EROSION CONTROL AND TREE REMOVAL PLAN
C2: EROSION CONTROL AND TREE REMOVAL PLAN
C3: NOTES AND DETAILS
PR1: SSFM PLAN AND PROFILE
PR2: SSFM PLAN AND PROFILE
PR3: GRAVITY SEWER PLAN AND PROFILE
PR4: LIFT STATION SITE PLAN
PR5: LIFT STATION DETAILS
SSD-1: SANITARY SEWER STANDARD DETAILS
SSD-2: SANITARY SEWER STANDARD DETAILS
SSD-3: SANITARY SEWER STANDARD DETAILS

SUPPLEMENTAL SHEETS:
(1) EXISITING LIFT STATION #8 AS BUILT DETAILS
(2) EXISTING LIFT STATION #8 AS BUILT PROFILES

SEWER QUANTITIES FOR PROJECT

GRAVITY SANITARY SEWER:	130 LF 12"
SANITARY SEWER FORCEMAIN:	1,135 LF 10"

F:\Projects\2015\15048 PS8 Design (Task 2)\15048 Plans\dwg\15048.master.r4.dwg, 6/28/2016 2:10:38 PM

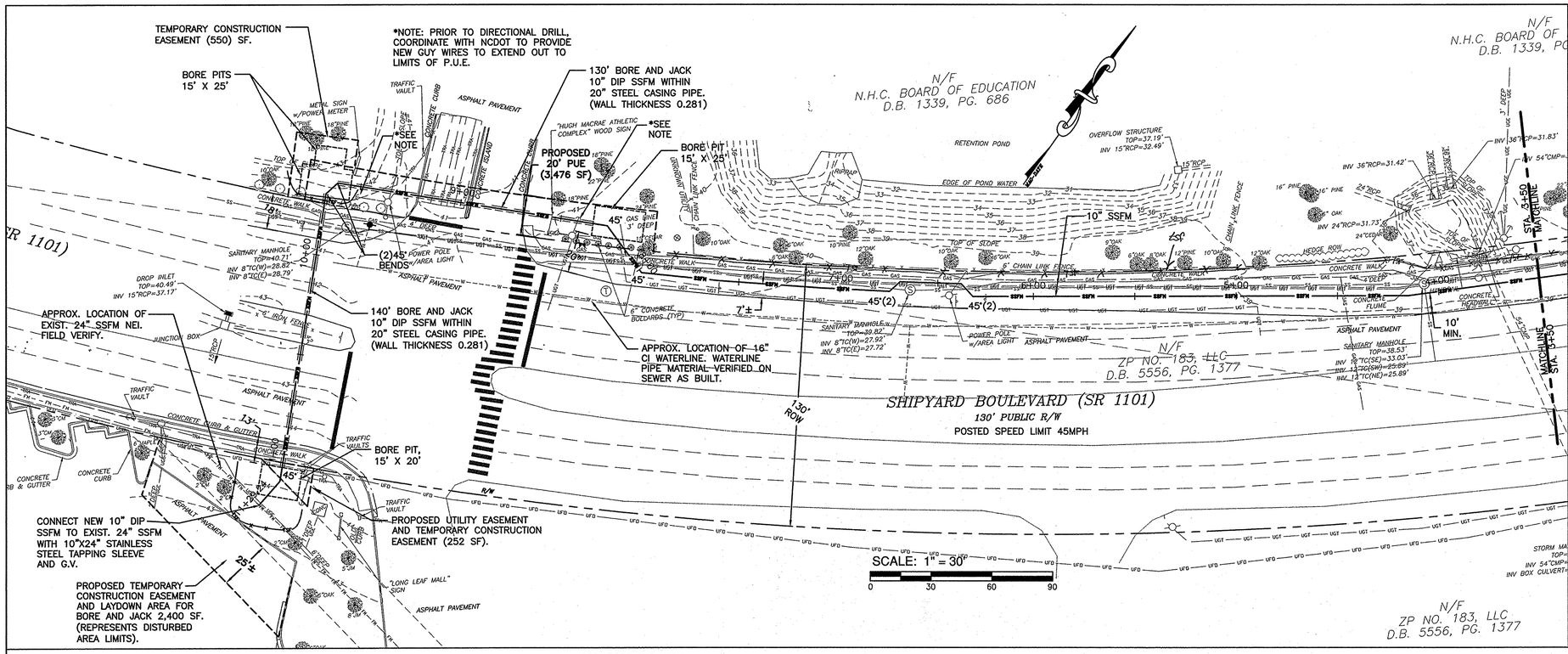

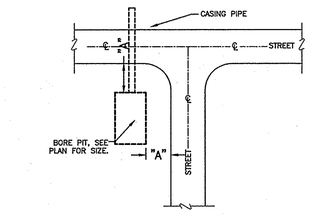

TYPICAL BORE PIT LOCATION FOR BORE AND JACK

NOT TO SCALE

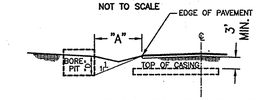

SECTION THRU BORE PIT LOCATION FOR BORE AND JACK

NOT TO SCALE

LAYOUT SCHEDULE (FT.)									
A	5	6	7	8	9	10	11	12	
D	5	6	7	8	9	10	11	12	

"A" = MINIMUM DISTANCE FROM THE EDGE OF PAVEMENT (EP) IS BASED ON THE DEPTH OF PIT ("D") AND BY A RATIO OF A 1:1 SLOPE. FOLLOW SAFETY REQUIREMENTS BY FENCING OFF OPEN PIT AND WORKING AREA.

PIPE SIZES (O.D.)	WALL THICKNESS
4" – 12-¾"	0.188
14" – 16"	0.219
18"	0.250
20"	0.281
22"	0.312
24"	0.344
26"	0.375
28" – 30"	0.406
32"	0.438
34" – 36"	0.469
38" – 42"	0.500

NOTES FOR BORE AND JACK:

1. ALL BORING/JACKING MUST BE DONE IN ACCORDANCE WITH NCDOT REGULATIONS.
2. BORE & JACK CASING PIPE UNDER A ROAD SECTION WITH NO DITCHES SHALL EXTEND 10 FT. BEYOND EDGE OF PAVEMENT.
3. BORE & JACK CASING PIPE UNDER ROADS IN FILL SECTIONS SHALL EXTEND 5 FT. BEYOND TOE OF FILL SLOPE.
4. BORE & JACK CASING PIPE UNDER CULVERTS SHALL BE 3 FT. BELOW CULVERT INVERT.
5. SIZE & WALL THICKNESS OF SMOOTH WALL OR SPIRAL WELDED STEEL CASING PIPE FOR BORING & JACKING IS CALLED OUT IN CHART.
6. CARRIER PIPE SHALL BE DIP PER CFPUA SPECIFICATIONS. JOINTS SHALL BE RESTRAINED WITHIN CASING PIPE.

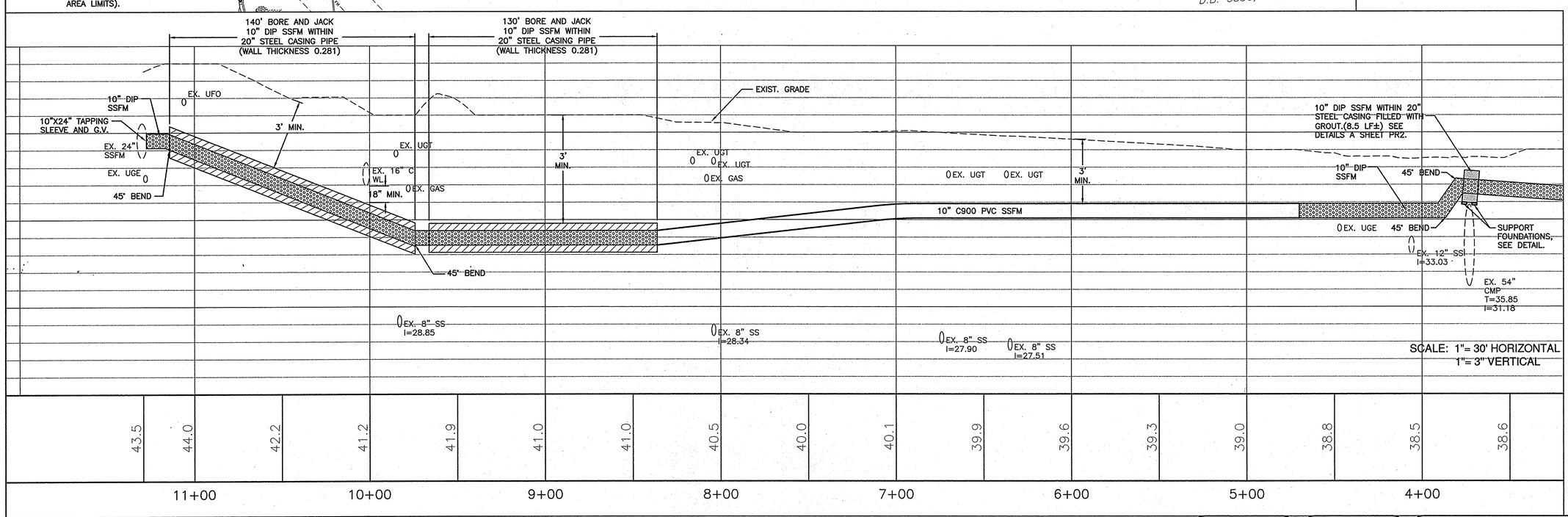

REV NO.	DESCRIPTION	DATE
	REVISIONS	

NORTH CAROLINA PROFESSIONAL SEAL 19651 ENGINEER JOHN S. TUNSTALL

Cape Fear Public Utility Authority
Ownership. Sustainability. Service.

NORRIS & TUNSTALL
CONSULTING ENGINEERS, INC.
902 MARKET STREET WILMINGTON, NC, 28401
PHONE (910) 343-9653
FAX (910) 343-9604
licence #C-0520

PLAN AND PROFILE
PUMP STATION 8 DESIGN
SHIPYARD BOULEVARD
NEW HANOVER COUNTY

DATE: 6/28/16
SCALE: 1" = 30' 1" = 3'
DRAWN: NKS
CHECKED: JST
PROJECT NO: 15048

SHEET NO: PR1

F:\Projects\2015\15048 PSB Design (Task 2)\15048 Plans\dwg\15048.master.4.dwg, 6/28/2016 2:12:55 PM

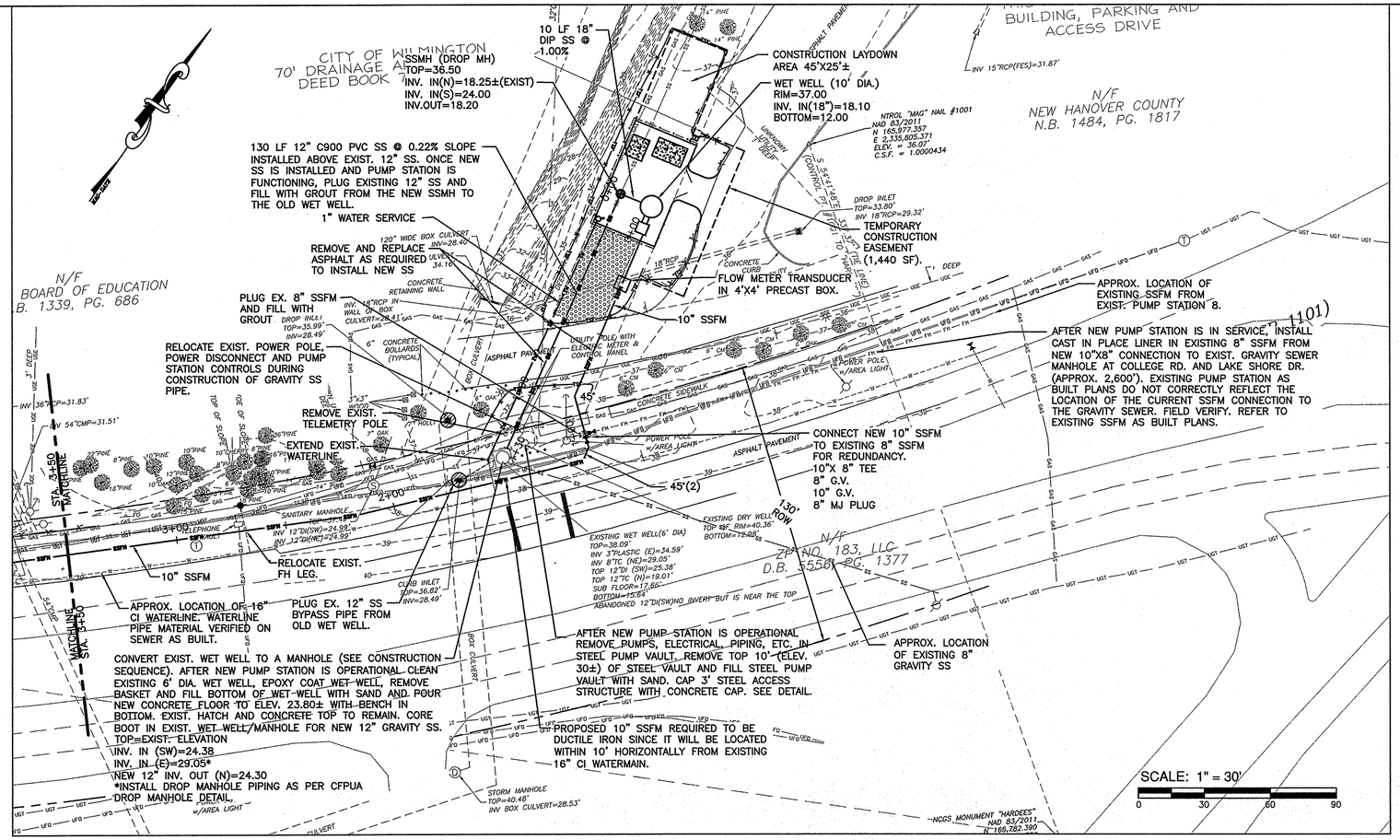

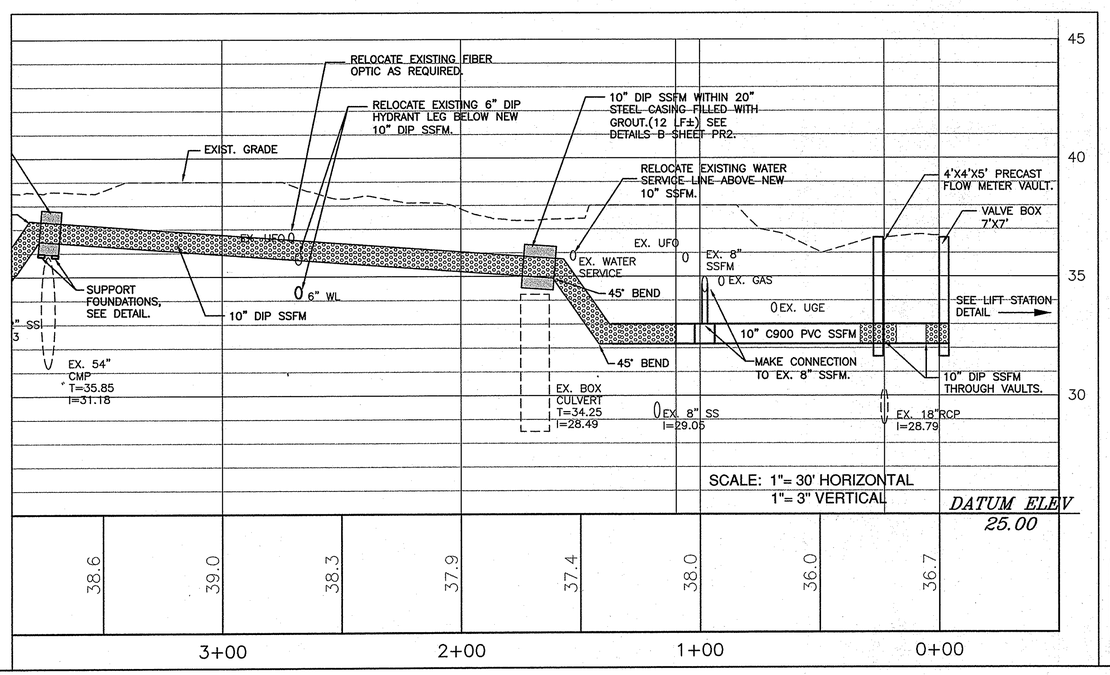

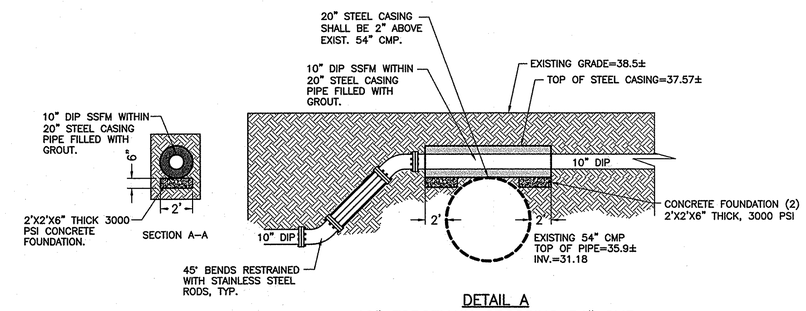

DETAIL A
10" FORCEMAIN CROSSING 54" CMP
(NOT TO SCALE)

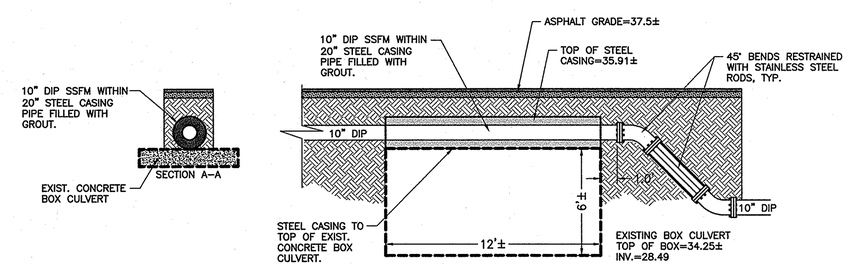

DETAIL B
10" FORCEMAIN CROSSING BOX CULVERT
(NOT TO SCALE)

REV NO.	DESCRIPTION	DATE
	REVISIONS	

NORTH CAROLINA PROFESSIONAL SEAL 19651 ENGINEER JOHN S. TUNSTALL

Cape Fear Public Utility Authority
Stewardship, Sustainability, Service

NORRIS & TUNSTALL
CONSULTING ENGINEERS, INC.
902 MARKET STREET
WILMINGTON, NC, 28401
PHONE (910) 343-9653
FAX (910) 343-9804
licence #C-0520

PLAN AND PROFILE
PUMP STATION 8 DESIGN
SHIPYARD BOULEVARD
NEW HANOVER COUNTY

DATE: 6/28/16
SCALE: 1" = 30' 1" = 3'
DRAWN: NKS
CHECKED: JST
PROJECT NO: 15048

SHEET NO: PR2

F:\Projects\2015\15048 PSB Design (Task 2)\15048 Plans\dwg\15048.master.4.dwg, 6/28/2016 2:13:16 PM

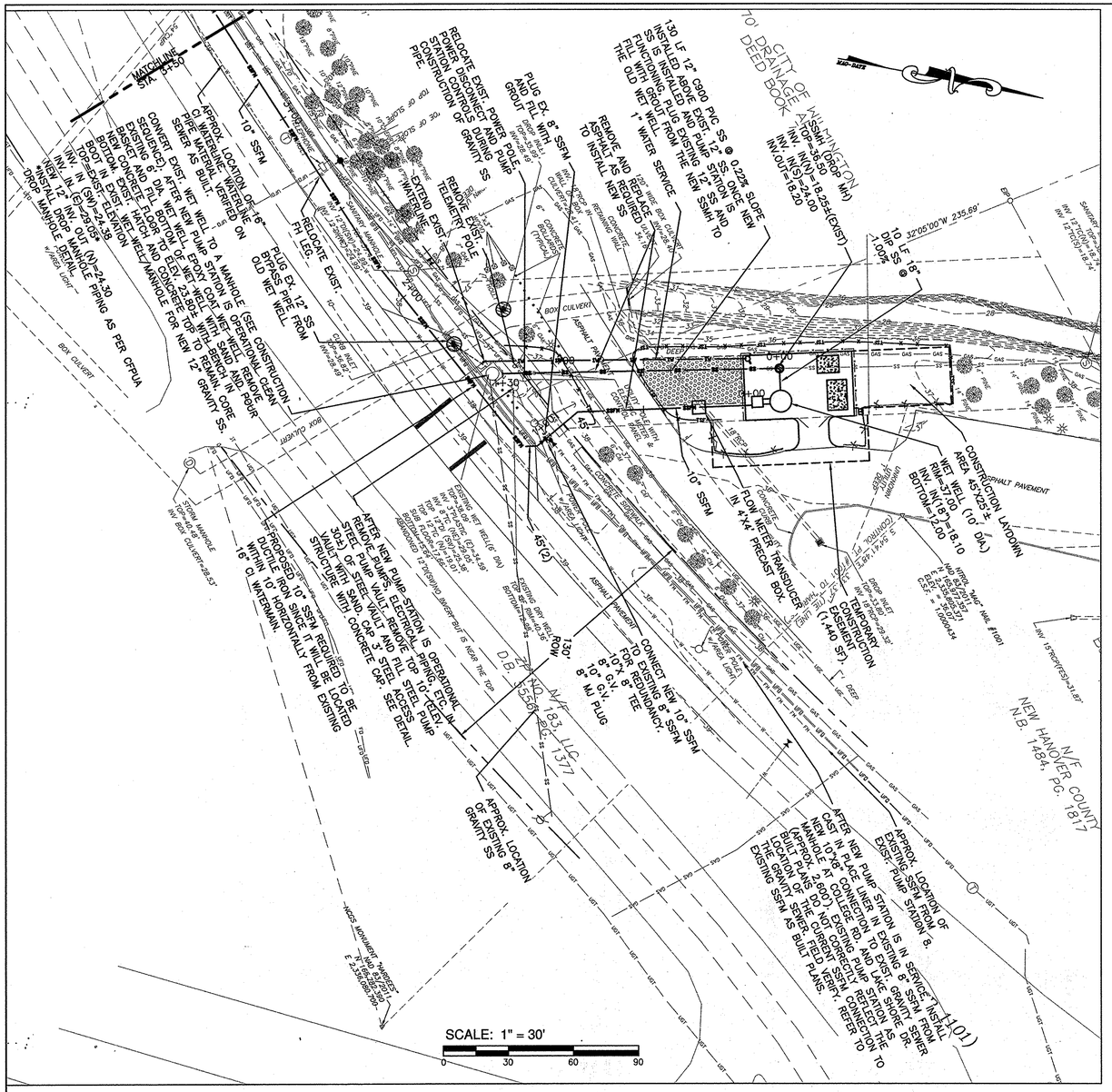

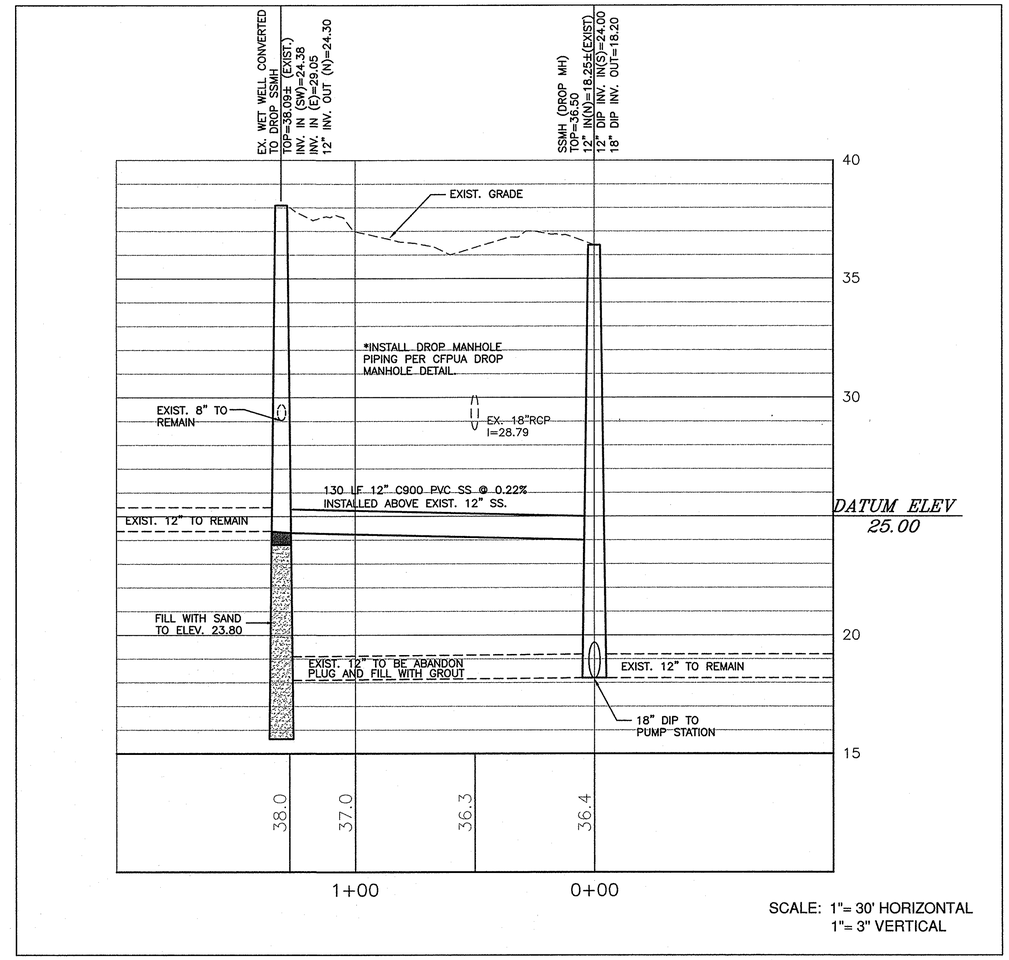

REV NO.	DESCRIPTION	DATE
	REVISIONS	

NORTH CAROLINA PROFESSIONAL SEAL 19851 ENGINEER JOHN S. TUNSTALL

Cape Fear Public Utility Authority
Dependable. Sustainable. Service.

NORRIS & TUNSTALL
CONSULTING ENGINEERS, INC.
902 MARKET STREET
WILMINGTON, NC, 28401
PHONE (910) 343-9653
FAX (910) 343-9604
licence #C-0520

PLAN AND PROFILE
PUMP STATION 8 DESIGN
SHIPYARD BOULEVARD
NEW HANOVER COUNTY

DATE: 6/28/16
SCALE: 1" = 30' 1" = 3'
DRAWN: NKS
CHECKED: JST
PROJECT NO: 15048

SHEET NO:
PR3

F:\Projects\2015\15048 PSB Design (Task 2)\15048 Plans\dwg\15048-master.r4.dwg, 6/28/2016 2:13:38 PM

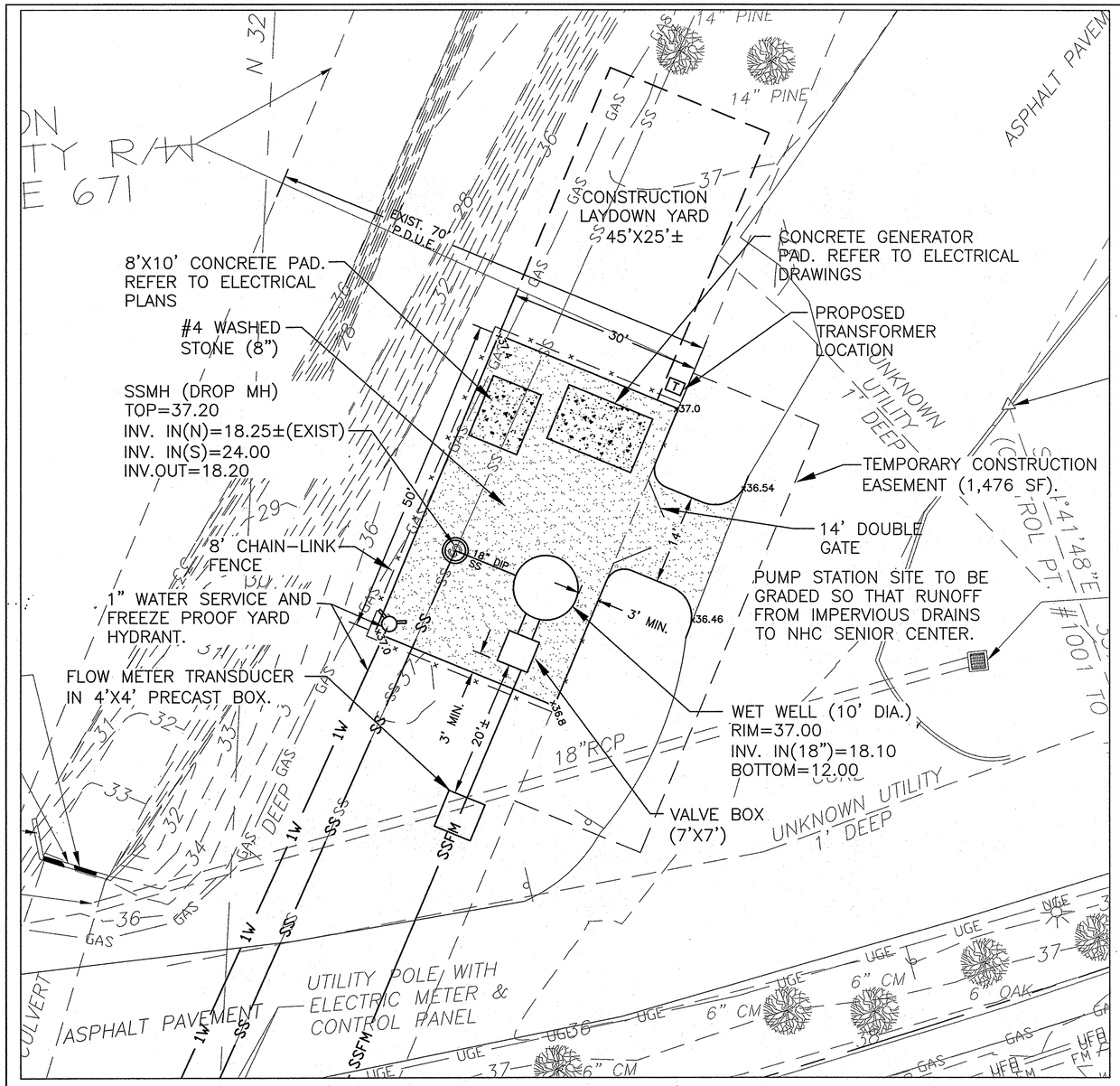

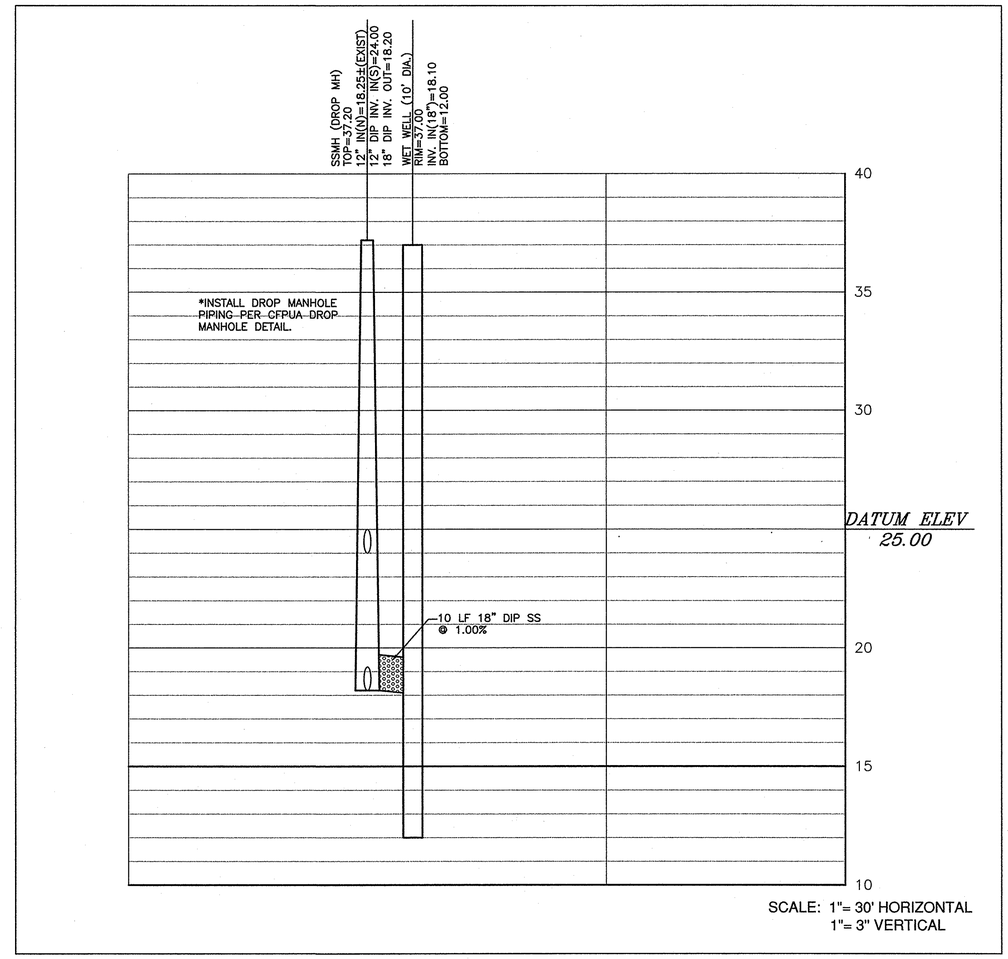

REV NO.	DESCRIPTION	DATE
	REVISIONS	

NORTH CAROLINA PROFESSIONAL SEAL 19851 ENGINEER JOHN S. TUNSTALL

Cape Fear Public Utility Authority
Stewardship. Sustainability. Service.

NORRIS & TUNSTALL
CONSULTING ENGINEERS, INC.
902 MARKET STREET
WILMINGTON, NC, 28401
PHONE (910) 343-9653
FAX (910) 343-9604
licence #C-0520

PLAN AND PROFILE
PUMP STATION 8 DESIGN
SHIPYARD BOULEVARD
NEW HANOVER COUNTY

DATE: 6/28/16
SCALE: 1" = 30' 1" = 3'
DRAWN: NKS
CHECKED: JST
PROJECT NO: 15048

SHEET NO:
PR4

F:\Projects\2015\15048 PSB Design (Task 2)\15048 Plans\dwg\15048.master.r4.dwg, 6/28/2016 2:14:07 PM

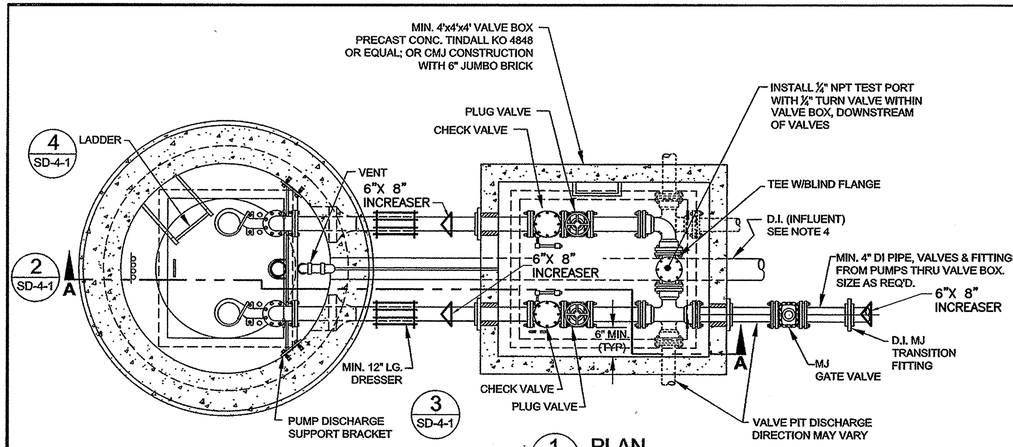

1 SD-4-1 **PLAN**
NOT TO SCALE

PUMP INFORMATION
MANUFACTURER MYERS
MODEL # 4VCX WITH VFD
HORSEPOWER 50
PHASE 3 VOLTS
VARIES GPM @ VARIES TDH
12" IMPELLER DIAMETER

ITEM	DIM.	DESCRIPTION
"A"	12'±	OUTSIDE DIAMETER OF WET WELL
"B"	10'	INSIDE DIAMETER OF WET WELL
"C"	48"	ACCESS HATCH LENGTH (48" MIN.)
"D"	48"	ACCESS HATCH WIDTH (32" MIN.)
"E"	4'	CL PUMP TO CL PUMP DIMENSION
"F"	7'	CL HATCH TO OUTSIDE OF WET WELL
"G"	6'	CL HATCH TO INSIDE OF WET WELL
"H"	8"	PIPE DIAMETER
"I"	36"	CL PIPE TO CL PIPE DIMENSION 30" MIN (4") 36" MIN (6")
"J"	84"	VALVE PIT WIDTH 60" MIN (4") 84" MIN (6")
"K"	84"	VALVE PIT LENGTH 60" MIN (4") 84" MIN (6")
"L"	60"	ACCESS HATCH LENGTH (48" MIN)
"M"	60"	ACCESS HATCH WIDTH (48" MIN)
"N"	18"	INFLUENT PIPE SIZE
"O"	10"	FORCE MAIN PIPE SIZE (4" MIN)

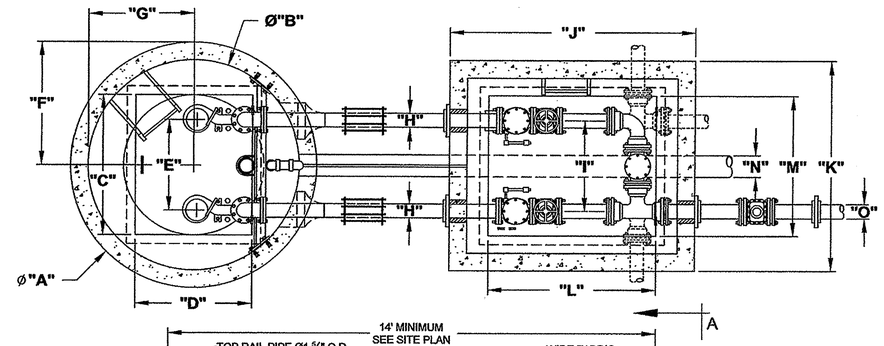

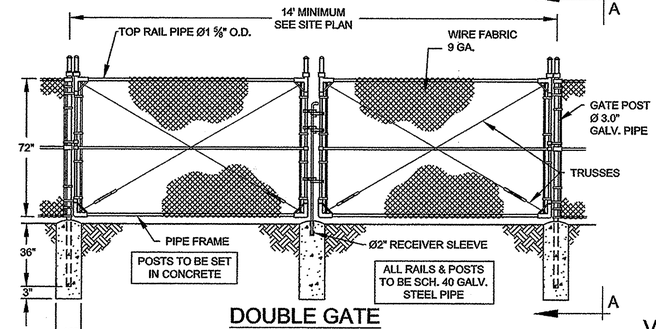

DOUBLE GATE
(GATE MUST BE LOCKABLE)
NOT TO SCALE

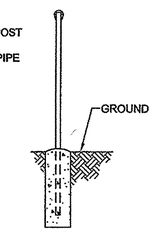

VIEW A-A

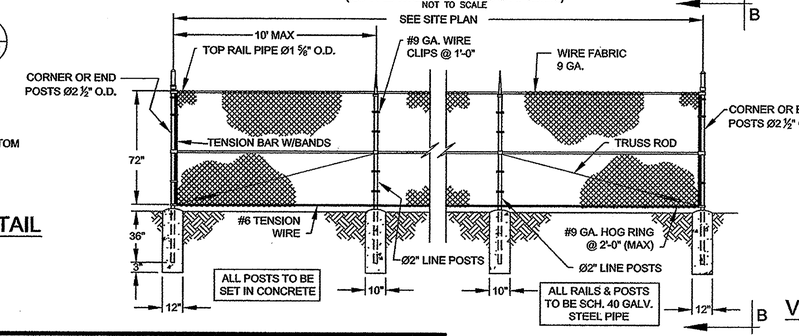

TYP. CHAIN LINK FENCE
NOT TO SCALE

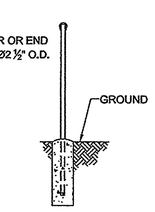

VIEW B-B

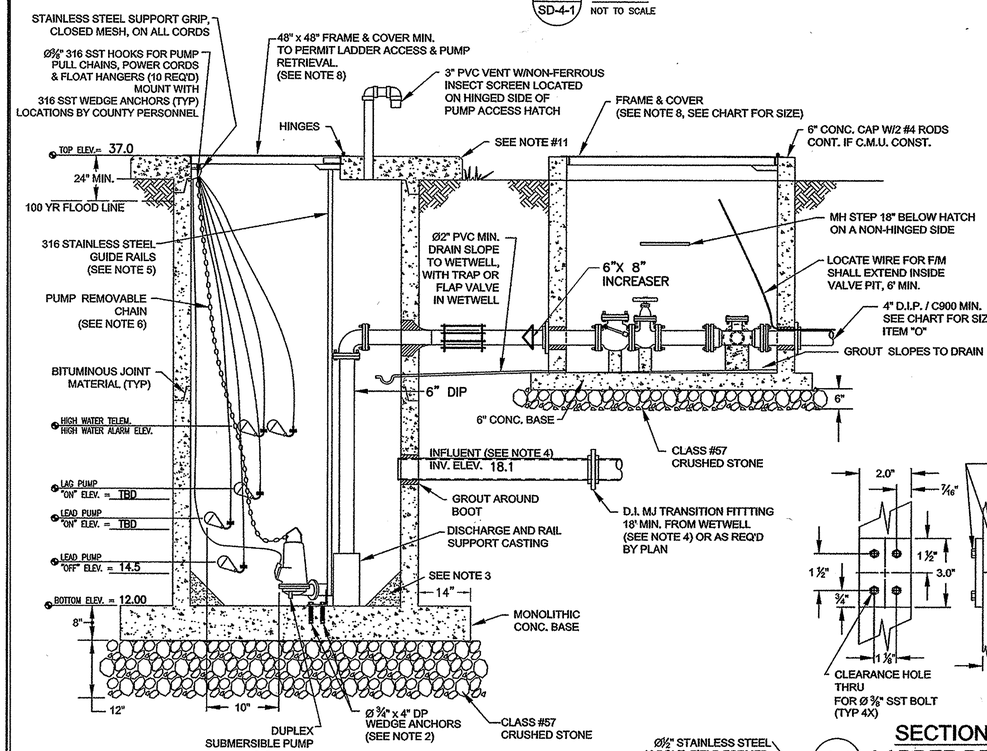

2 **SECTION A-A**
NOT TO SCALE

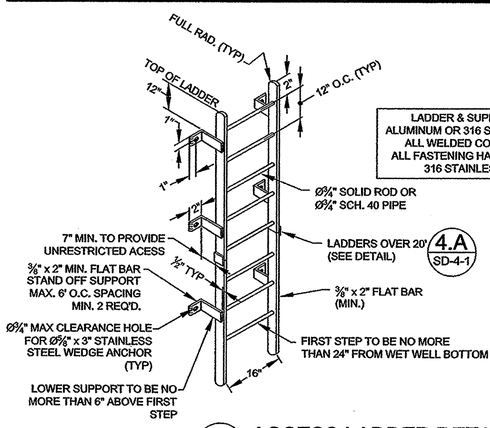

LADDER & SUPPORT TO BE ALUMINUM OR 316 STAINLESS STEEL
ALL WELDED CONSTRUCTION
ALL FASTENING HARDWARE TO BE 316 STAINLESS STEEL

4 **ACCESS LADDER DETAIL**
NOT TO SCALE

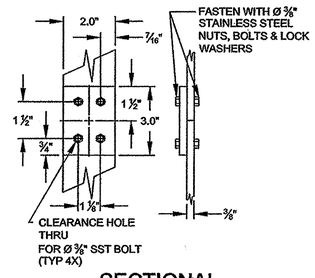

4.A **SECTIONAL LADDER DETAIL**
NOT TO SCALE

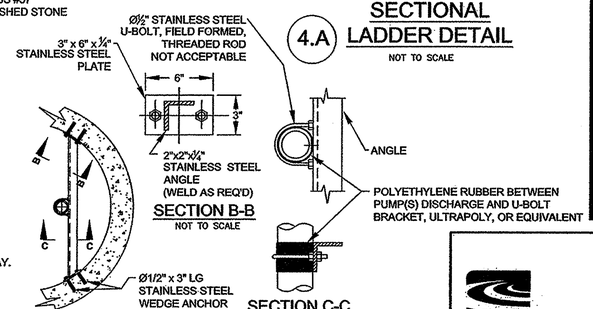

SECTION B-B
NOT TO SCALE

SECTION C-C
NOT TO SCALE

3 **PUMP DISCHARGE SUPPORT BRACKET SECTION**
NOT TO SCALE

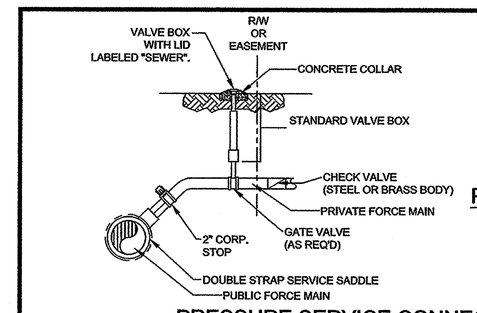

PRESSURE SERVICE CONNECTION TAPPING SADDLE
(PRIVATE FM TO PUBLIC FM)
NOT TO SCALE

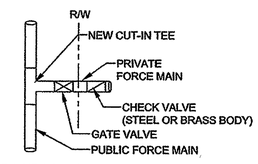

PRESSURE SERVICE CONNECTION TEE & VALVE
(PRIVATE FM TO PUBLIC FM)
NOT TO SCALE

SITE LAYOUT NOTES:
(1) ALL STRUCTURES TO BE PARALLEL AND PERPENDICULAR TO EACH OTHER.
(2) PROVIDE 3' MIN. SEPARATION BETWEEN ALL STRUCTURES, AND TO FENCE.
(3) ALL TOP OF SLAB ELEV. TO BE UNIFORM.
(4) AREA INSIDE FENCE TO HAVE 4", #57 M WASHED STONE.
(5) UTILITY METER BASE TO BE LOCATED OUTSIDE OF FENCE.
(6) ACCESS DRIVE AND TURN AROUND (WHERE REQ'D.) TO BE 6" ABC, MINIMUM.
(7) FENCE GATE MUST ALLOW DIRECT IN LINE ACCESS TO WET WELL.

NOTES:
(1) UNLESS OTHERWISE SPECIFIED, ALL METAL WET WELL COMPONENTS,HARDWARE, AND FASTENERS, SHALL BE CAST IRON. DUCTILE IRON, OR 316 STAINLESS STEEL OR BETTER.
(2) UNLESS OTHERWISE SPECIFIED, ALL CONCRETE FASTENERS TO BE 316 STAINLESS STEEL WEDGE ANCHORS (TYP).
(3) CONCRETE FILLET IN BOTTOM OF WET WELL TO START 10" FROM THE ULTIMATE PUMP SIZE AND BASE AT 45° (TYP) ALL AROUND.
(4) INFLUENT TO ENTER WET WELL CENTERED BETWEEN AND PARALLEL TO PUMP DISCHARGE PIPES. PROVIDE ONE 18' JOINT DIP AT WET WELL.
(5) ONE PIECE SCHD. 40, 316 STAINLESS STEEL GUIDE RAILS. DIAMETER PER MANUFACTURERS RECOMMENDATIONS. TWO PIECE RAILS WITH INTERMEDIATE (MID 1/3) SUPPORT, FOR LENGTHS GREATER THAN 18 FEET.
(6) PUMP REMOVABLE CHAIN AND RELATED LIFTING HARDWARE TO BE 3/8" MIN.,316-L STAINLESS STEEL 2000 LB MIN. WORKLOAD LIMIT. LENGTH TO EXTEND 4' ABOVE HATCH.
(7) PUMP DISCHARGE SUPPORT BRACKET FOR DUCTILE IRON, OVER 10' MIN. ONE REQ'D. MIDWAY.
(8) ACCESS HATCHES SHALL BE PAD LOCKABLE FRAME & COVER, WITH 1/4" ALUMINUM PLATE AND 1/4" THICK x 3" WIDE STAINLESS STEEL HINGES MIN. AND POSITIVE LOCKING DOOR RESTRAINT. HINGE ON DISCHARGE SIDE OF WET WELL AND VALVE BOX, (HALLIDAY PROD. OR EQUAL, SIZE AS REQ'D).
(9) PLUG VALVES TO BE DeZURIK (FIG. 118) ECCENTRIC, CAST IRON BODY AWWA C504 WITH 4" HAND WHEEL & NON RISING STEM. SWING CHECK VALVES TO BE MUELLER IRON BODY, BRONZE MOUNTED AWWA C508 WITH OUTSIDE SPRING & LEVER.
(10) ELEVATION OF TOP OF WET WELL AND ELEC. CONDUITS SHALL BE 2.0 FEET ABOVE THE 100 YEAR FLOOD ELEVATION.
(11) CONCRETE PAD (36" MINIMUM WIDTH W/45° CHAMFER) AROUND OUTSIDE DIAMETER OF WET WELL.

Cape Fear Public Utility Authority
Stewardship. Sustainability. Service.

REV:	DESCRIPTION	DATE:
A	CFPUA Revisions	05/14/08
B	Engineering Revisions	02/18/09
C	CFPUA Revisions	03/11/09
D	CFPUA Revisions	06/22/09

THESE DETAILS ARE A WORK PRODUCT OF CFPUA FOR WATER AND SEWER SYSTEM DESIGN AND CONSTRUCTION AND HAVE BEEN REVIEWED AND APPROVED FOR CONTENT AND GENERAL CONFORMANCE WITH THE WATER AND SEWER DESIGN FOR THIS PROJECT.

NORTH CAROLINA PROFESSIONAL SEAL 19651 ENGINEER JOHN S. TUNSTALL 7/11/16

PUMP STATION / SITE PLAN STANDARD DETAILS

CAPE FEAR
PUBLIC UTILITY AUTHORITY
PUMP STATION / SITE PLAN STANDARD DETAILS
SD-4

CAPE FEAR PUBLIC UTILITY AUTHORITY
235 GOVERNMENT CENTER DRIVE
WILMINGTON, NC 28403
OFFICE: (910)332-6560

DATE: 6/28/16
SCALE: N/A
DRAWN BY:
CHECKED BY:
PROJECT NO.: 15048
SHEET NO: PR5

F:\Projects\2015\15048 PSB Design (Task 2)\15048 Plans\dwg\15048_master-4.dwg, 6/28/2016 2:16:00 PM

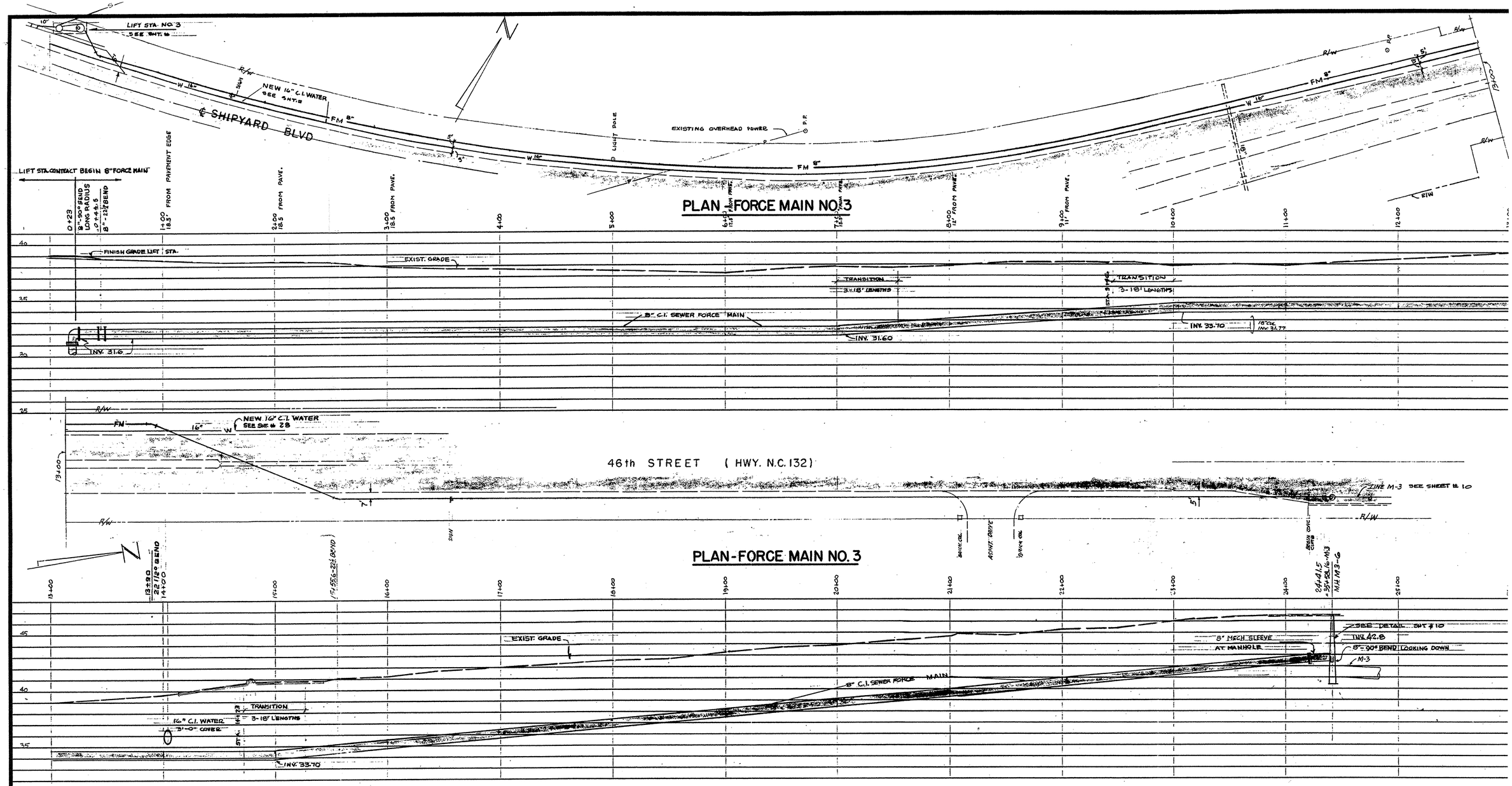

FOR LEGEND SEE SHT. # 22.

RECORD DRAWINGS
CONFORMS TO
CONSTRUCTION RECORDS
JUN 27 1967

SYMBOL	DATE	DESCRIPTION
		REVISIONS

SANITARY SEWER & WATER IMPROVE
CITY OF WILMINGTO
NORTH CAROLINA

SANITARY SEWER EXTENSIONS
PLAN AND PROFILE
FORCE MAIN # 3
SHIPYARD BOULEVARD

HENRY VON OESEN & ASSOCIA
CONSULTING ENGINEERS
WILMINGTON, N. C.

NORTH CAROLINA REGISTERED SEAL 3415 ENGINEER T. ROBERT LYONS, JR.
SEAL

DES. TRL	11
DRWN. PLC CTJ	S
CHK. HVO	SH
15048	
DATE JULY 1 '65	OF

Southern Photo Print & Supply Co., Greensboro, N. C. 8"1HM—500—3-64

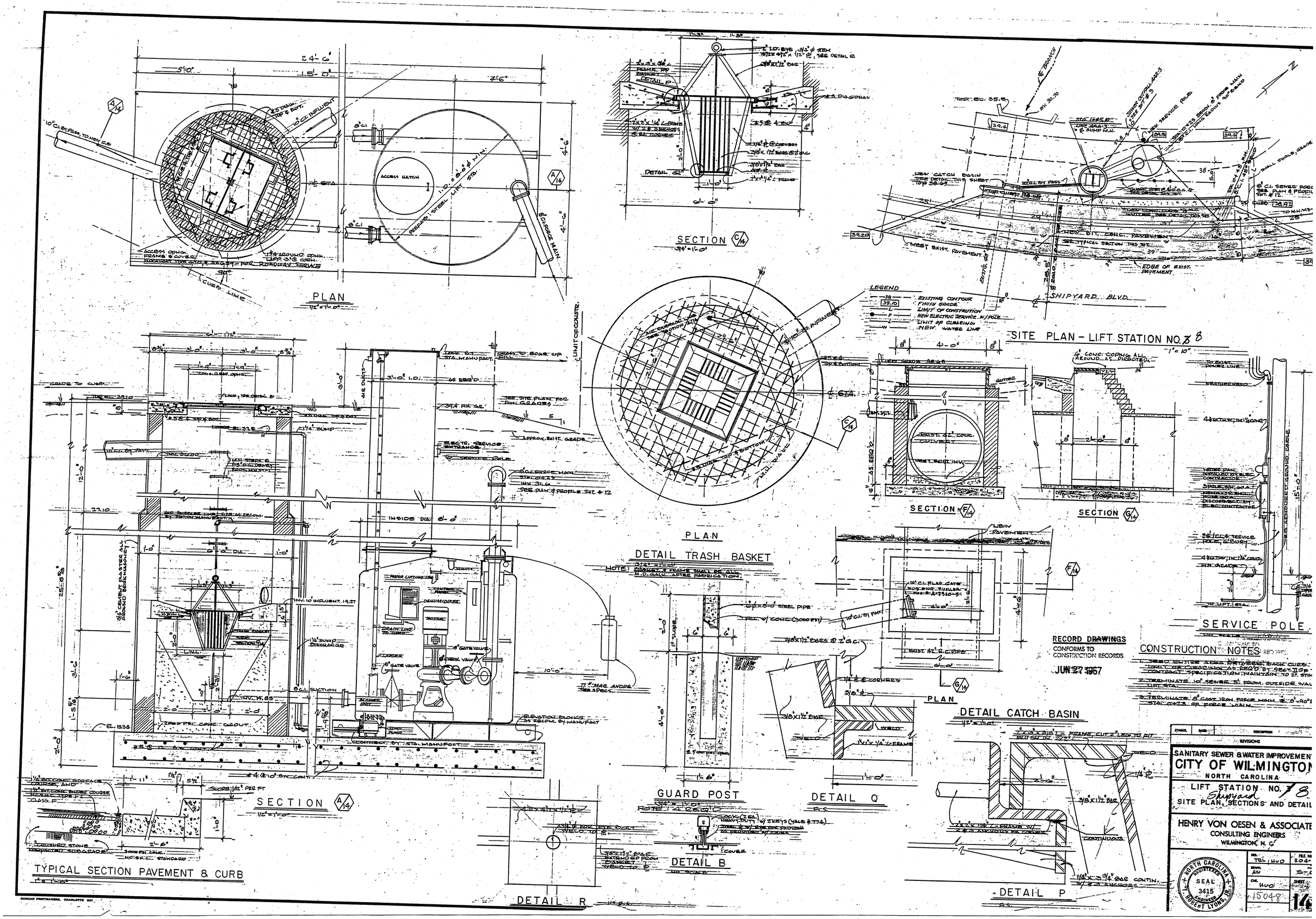
PLAN
SECTION
SITE PLAN - LIFT STATION NO. 8
SHIPYARD BLVD.
LEGEND
EXISTING CONTOUR
FINISH GRADE
LIMIT OF CONSTRUCTION
NEW ELECTRIC SERVICE W/ POLE
LIMIT OF CLEARING
NEW WATER LINE
PLAN
DETAIL TRASH BASKET
SECTION
SECTION
SERVICE POLE
RECORD DRAWINGS
CONFORMS TO CONSTRUCTION RECORDS
JUN 27 1967
CONSTRUCTION NOTES
PLAN
DETAIL CATCH BASIN
GUARD POST
DETAIL Q
SECTION
TYPICAL SECTION PAVEMENT & CURB
DETAIL B
DETAIL R
DETAIL P
SANITARY SEWER & WATER IMPROVEMENT
CITY OF WILMINGTON
NORTH CAROLINA
LIFT STATION NO. 8
Shipyard
SITE PLAN, SECTIONS AND DETAIL
HENRY VON OESEN & ASSOCIATE
CONSULTING ENGINEERS
WILMINGTON, N. C.
NORTH CAROLINA REGISTERED SEAL 3415 ENGINEER T. ROBERT LYONS, JR.
15048
14

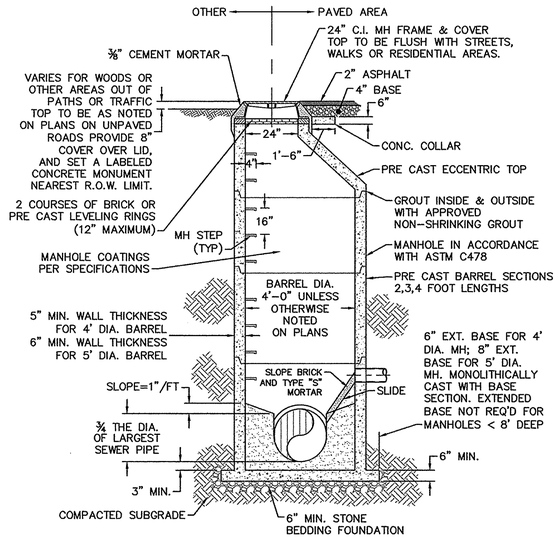

SD-1 PRECAST CONCRETE OFFSET MANHOLE TYPICAL
NOT TO SCALE

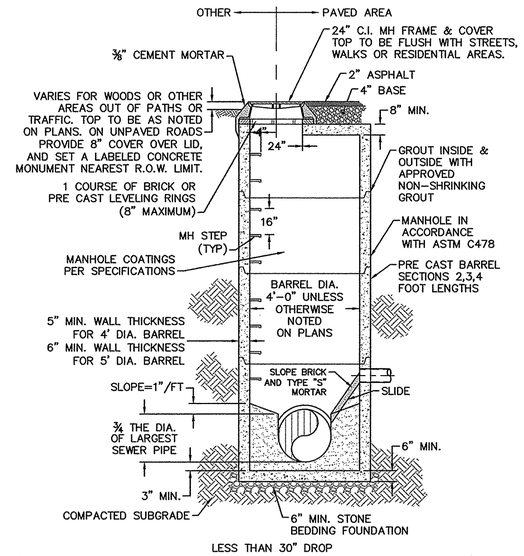

SD-2 PRECAST CONCRETE FLAT TOP MANHOLE TYPICAL
NOT TO SCALE

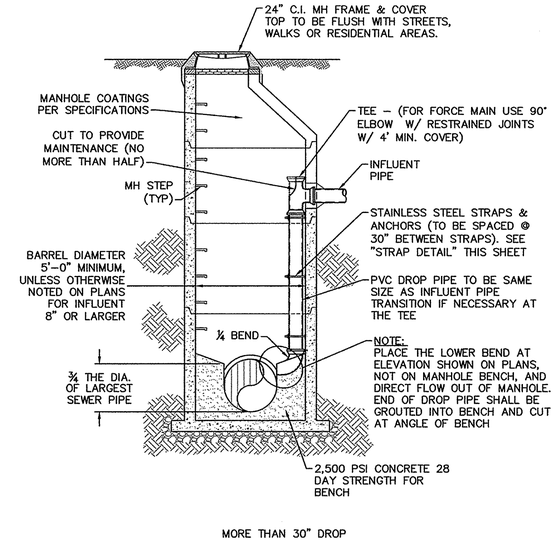

SD-3 DROP MANHOLE
NOT TO SCALE

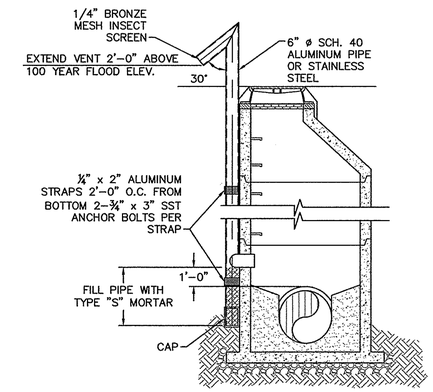

SD-4 STANDARD VENT MANHOLE
NOT TO SCALE

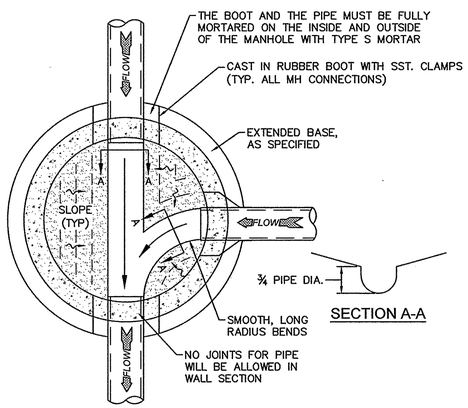

SD-5 MANHOLE FLOOR PLAN
NOT TO SCALE

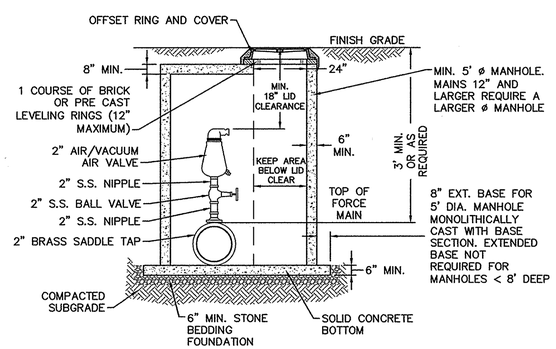

NOTES:
1. CONTRACTOR TO INSTALL VALVE AND MANHOLE AT SUFFICIENT DEPTH TO ALLOW FOR ACCESS.
2. FORCE MAIN TO BE OFFSET IN MANHOLE TO KEEP AREA BELOW LID CLEAR.
3. REFER TO SPECIFICATIONS FOR ADDITIONAL DETAILS.
4. USE CAST IN RUBBER BOOT WITH SST. CLAMPS FOR ALL MH CONNECTIONS, INCLUDING FORCE MAIN.

SD-6 AIR/ VACUUM AND AIR RELEASE COMBINATION VALVE
NOT TO SCALE

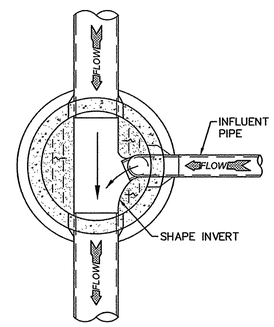

SD-7 DROP MANHOLE FLOOR PLAN
NOT TO SCALE

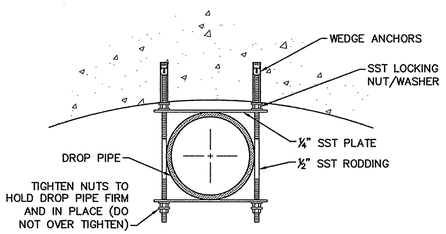

NOTE: ALL PARTS TO BE 316 SST.

SD-8 STRAP DETAIL
NOT TO SCALE

CAPE FEAR PUBLIC UTILITY AUTHORITY STANDARD NOTES:

1. SEWER GUARDS REQUIRED AT ALL MANHOLES. STAINLESS STEEL SEWER GUARDS REQUIRED AT MANHOLES LOCATED IN TRAFFIC AREAS.
2. WATER AND SEWER SERVICES SHALL BE PERPENDICULAR TO MAIN AND TERMINATE AT RIGHT-OF-WAY LINE. SEWER SERVICES IN CUL-DE-SACS ARE REQUIRED TO BE PERPENDICULAR, OR MUST ORIGINATE IN END OF LINE MANHOLE AND TERMINATE AT RIGHT-OF-WAY LINE.
3. ALL SERVICES TYING INTO DUCTILE IRON MAINS SHALL BE CONSTRUCTED OF CLASS 50, DIP, WITH PROTECTO 401 CERAMIC EPOXY LINING.
4. MINIMUM 10' UTILITIES EASEMENT PROVIDED ALONG THE FRONTAGE OF ALL LOTS AND AS SHOWN FOR NEW DEVELOPMENTS.
5. NO FLEXIBLE COUPLINGS SHALL BE USED.
6. ALL STAINLESS STEEL FASTENERS SHALL BE 316.
7. CLEANOUTS SHALL BE LOCATED A MINIMUM OF 12 FEET FROM ALL PROPERTY CORNERS. WATER METER BOXES ARE TO BE A MINIMUM OF 5 FEET FROM THE PROPERTY CORNER.

SD-9 STANDARD NOTES
(REQUIRED ON ALL PLAN AND PROFILE SHEETS)

GENERAL NOTES:
1. NO EXCAVATED MATERIAL SHALL BE PLACED IN ANY STREAM, DITCH OR DRAINAGE-WAY.
2. THE CONTRACTOR IS RESPONSIBLE FOR LOCATING ALL UNDERGROUND UTILITIES BEFORE ANY CONSTRUCTION BEGINS.
3. THE CONTRACTOR IS RESPONSIBLE FOR TEMPORARY SEDIMENT AND EROSION CONTROL MEASURES WHILE CONSTRUCTION IS IN PROGRESS.
4. THE CONTRACTOR IS RESPONSIBLE FOR STABILIZATION OF ALL DISTURBED AREAS.
5. THE CONTRACTOR IS RESPONSIBLE FOR LAY DOWN AND STOCKPILE AREAS (TO ARRANGE AND ENSURE COMPLIANCE WITH ALL LOCAL AND STATE REGULATIONS).

THE DETAILS SHOWN HEREON SUPERCEDE CFPUA WRITTEN TECHNICAL SPECIFICATIONS VERSIONS 1.00 - 1.04

THESE DETAILS ARE A WORK PRODUCT OF CFPUA FOR SEWER SYSTEM DESIGN AND CONSTRUCTION AND HAVE BEEN REVIEWED AND APPROVED FOR CONTENT AND GENERAL CONFORMANCE WITH THE SEWER DESIGN FOR THIS PROJECT.

REV:	DESCRIPTION:	DATE:
1	AIR / VACUUM AND AIR RELEASE COMBINATION VALVE REVISED	10/26/12
2	STANDARD SEWER NOTE #6 REVISED	12/10/12
3	REVISED STANDARD VENT MANHOLE TO EXTEND VENT 2'-0" ABOVE 100 YR FLOOD	11/20/14
4	Revised Multiple Details	02/15/16

CFPUA SANITARY SEWER

NORTH CAROLINA PROFESSIONAL SEAL 19851 ENGINEER JOHN S. TUNSTALL

STANDARD DETAILS

CAPE FEAR PUBLIC UTILITY AUTHORITY
235 GOVERNMENT CENTER DRIVE
WILMINGTON, NC 28403
OFFICE: (910)332-6560
Stewardship. Sustainability. Service.

DATE: 1/9/12
SCALE: N/A
DRAWN BY: CFPUA
CHECKED BY: CFPUA
PROJECT NO.: 15048

SHEET NO: SSD-1

S:\Engineers\CFPUA Standard Details\CAD Files\CFPUA Sewer Details.dwg, 2/15/2016 3:29:55 PM, John.scott

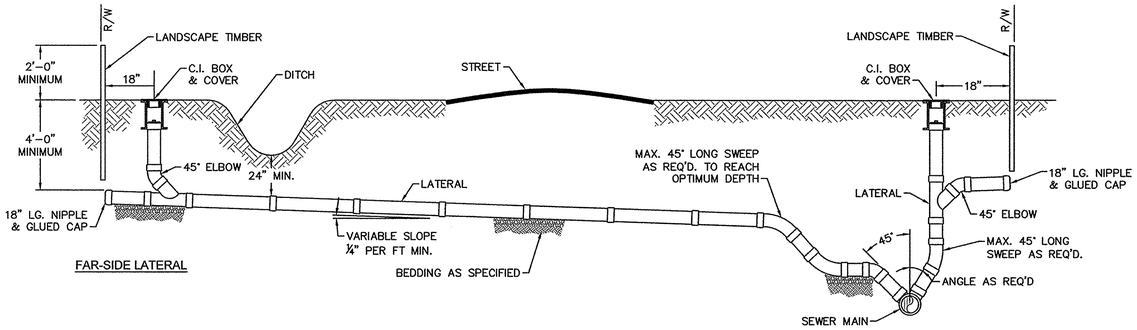

NOTE: FOR PRIVATE 8" SERVICES, MANHOLES ARE REQUIRED FOR TIE-IN TO MAIN

SD-19 STANDARD SERVICE CONNECTION TO SANITARY SEWER

NOT TO SCALE

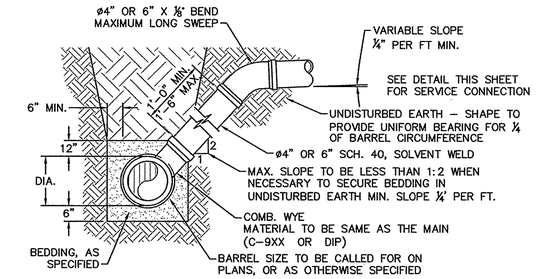

NOTE: FOR PRIVATE 8" SERVICES, MANHOLES ARE REQUIRED FOR CONNECTION TO SYSTEM AND AT THE PROPERTY LINE, WITH REQUIRED EASEMENT.

MAIN DEPTH LESS THAN 8 FT

SD-10 STANDARD SERVICE LATERAL

NOT TO SCALE

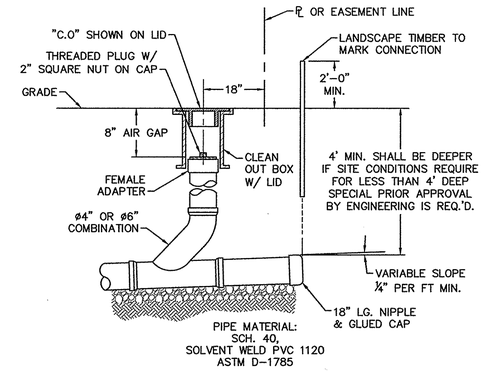

NOTE: FOR PRIVATE 8" SERVICES, MANHOLES ARE REQUIRED FOR CONNECTION TO SYSTEM AND AT THE PROPERTY LINE, WITH REQUIRED EASEMENT.

SD-11 SERVICE CONNECTION AND CLEAN-OUT

NOT TO SCALE

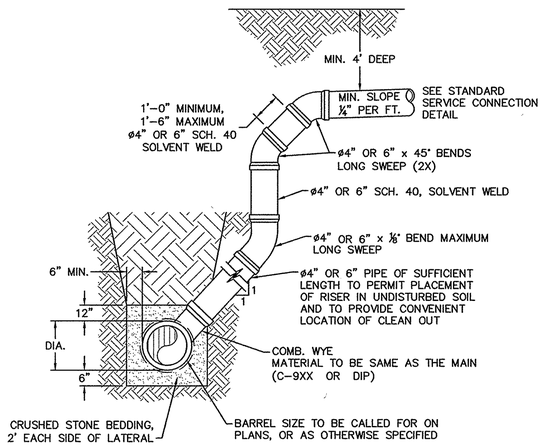

NOTES:
1. SPECIAL CARE SHALL BE TAKEN DURING BACKFILL OPERATIONS. THE RISER SHALL BE PLUMB AND TRUE AT ALL TIMES, AND REST ON FIRM, STABLE FOUNDATION.
2. FOR PRIVATE 8" SERVICES, MANHOLES ARE REQUIRED FOR CONNECTION TO SYSTEM AND AT THE PROPERTY LINE, WITH REQUIRED EASEMENT.

MAIN DEPTH GREATER THAN 8 FT

SD-12 DEEP SERVICE LATERAL

NOT TO SCALE

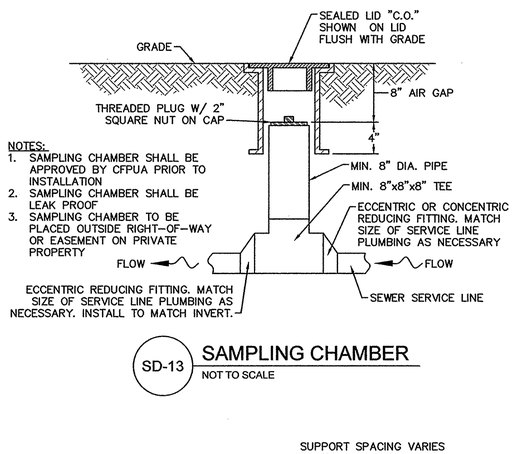

NOTES:
1. SAMPLING CHAMBER SHALL BE APPROVED BY CFPUA PRIOR TO INSTALLATION
2. SAMPLING CHAMBER SHALL BE LEAK PROOF
3. SAMPLING CHAMBER TO BE PLACED OUTSIDE RIGHT-OF-WAY OR EASEMENT ON PRIVATE PROPERTY

SD-13 SAMPLING CHAMBER

NOT TO SCALE

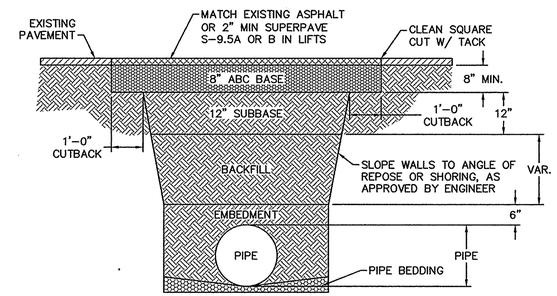

NOTES:
1. BACKFILL SHALL BE SUITABLE MATERIAL THAT IS FREE FROM HEAVY CLAY, GUMBOS, DEBRIS, ORGANICS AND LITTLE TO NO EXCESSIVE MOISTURE.
2. SELECT BACKFILL MAY BE SUBSTITUTED OR REQUIRED BY CITY TO ACHIEVE COMPACTION, (I.E. #57, ABC, CRUSHED LIMESTONE, CLEAN SAND, FLOWABLE FILL, ETC).
3. 8-INCH OF ABC BASE MATERIAL SHALL BE USED ON CITY STREETS.
4. BACKFILL AND BASE MATERIALS SHALL BE COMPACTED 12" MINIMUM LIFTS
5. SOIL SHALL BE COMPACTED BY A MECHANIZED TAMPER (I.E JUMPING JACK), HOWEVER, VIBRATORY ROLLERS > 18" WIDTH MAY BE USED FOR LARGER EXCAVATIONS. THE PLATE TAMP METHOD SHALL NOT BE USED.
6. ALL APPROVED CASTINGS SHALL BE SET FLUSH TO GRADE AND SUPPORTED IF APPLICABLE.
7. ABC BASE AND SUBBASE COMPACTED TO 98% AND BACKFILL AND EMBEDMENT COMPACTED TO 90% AS DETERMINED BY THE MODIFIED PROCTOR AASHTO METHOD T-99.
8. 1-FOOT CUTBACKS OF ASPHALT SHALL BE PREPARED ON UNDISTURBED SOIL. MINIMUM ASPHALT DENSITY IS 90%.

(FOR PRIVATE ROADS AND PAVED AREAS; CONTRACTOR TO MEET MIN. REQUIREMENTS AS DEFINED BY RIGHT-OF-WAY OWNER FOR PUBLIC ROAD REPAIRS)

SD-14 PAVEMENT REPAIR WHERE PIPE INSTALLED

NOT TO SCALE

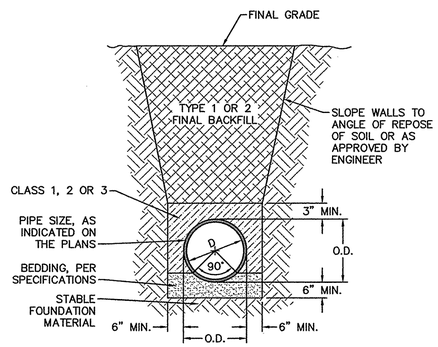

SD-15 TYPICAL TRENCH DETAIL

NOT TO SCALE

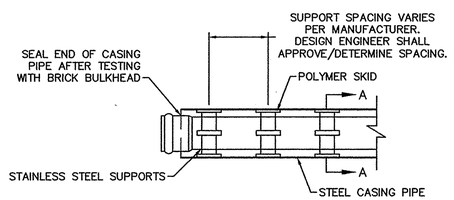

PLAN

NOTE: PIPE SUPPORT TO BE PLACED TO PROVIDE PROPER SUPPORT, ALIGNMENT, AND GRADE AS SPECIFIED. CONTINUOUS SUPPORTS MAY BE USED AS ALTERNATIVE. OIL, GREASE, OR PETROLEUM PRODUCT MAY NOT BE USED AS LUBRICANT.

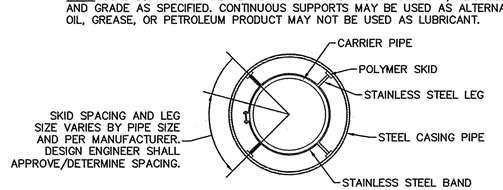

SECTION A-A

NOTE: ALL STAINLESS STEEL PARTS TO BE 316 SST.

SD-17 PIPE CASING SUPPORT DETAIL

NOT TO SCALE

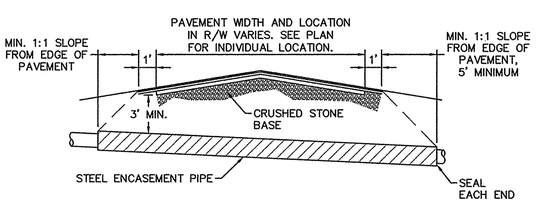

NOTES:
1. CASING WILL BE INSTALLED AT LINE AND GRADE SHOWN ON INDIVIDUAL PROFILE FOR EACH CROSSING. BORING/JACKING TO LINE AND GRADE IS REQUIRED.
2. TRACER WIRE SHALL BE CONTINUED THROUGH CASING.

SD-16 TYPICAL BORING/ JACKING DETAIL

NOT TO SCALE

GENERAL NOTES:
1. NO EXCAVATED MATERIAL SHALL BE PLACED IN ANY STREAM, DITCH OR DRAINAGE-WAY.
2. THE CONTRACTOR IS RESPONSIBLE FOR LOCATING ALL UNDERGROUND UTILITIES BEFORE ANY CONSTRUCTION BEGINS.
3. THE CONTRACTOR IS RESPONSIBLE FOR TEMPORARY SEDIMENT AND EROSION CONTROL MEASURES WHILE CONSTRUCTION IS IN PROGRESS.
4. THE CONTRACTOR IS RESPONSIBLE FOR STABILIZATION OF ALL DISTURBED AREAS.
5. THE CONTRACTOR IS RESPONSIBLE FOR LAY DOWN AND STOCKPILE AREAS (TO ARRANGE AND ENSURE COMPLIANCE WITH ALL LOCAL AND STATE REGULATIONS).

THE DETAILS SHOWN HEREON SUPERCEDE CFPUA WRITTEN TECHNICAL SPECIFICATIONS VERSIONS 1.00 - 1.04

THESE DETAILS ARE A WORK PRODUCT OF CFPUA FOR SEWER SYSTEM DESIGN AND CONSTRUCTION AND HAVE BEEN REVIEWED AND APPROVED FOR CONTENT AND GENERAL CONFORMANCE WITH THE SEWER DESIGN FOR THIS PROJECT.

REV:	DESCRIPTION:	DATE:
1	SAMPLING CHAMBER REVISED	10/26/12
2	Revised Multiple Details	02/15/16

NORTH CAROLINA PROFESSIONAL SEAL 19851 ENGINEER JOHN S. TUNSTALL

CFPUA SANITARY SEWER

STANDARD DETAILS

CAPE FEAR PUBLIC UTILITY AUTHORITY
235 GOVERNMENT CENTER DRIVE
WILMINGTON, NC 28403
OFFICE: (910)332-6560
Stewardship. Sustainability. Service.

DATE: 1/9/12
SCALE: N/A
DRAWN BY: CFPUA
CHECKED BY: CFPUA
PROJECT NO.: 15048
SHEET NO: SSD-2

S:\Engineering\CFPUA Standard Details\CAD Files\CFPUA-Sewer Details.dwg, 3/15/2016 3:28:43 PM, john.scott

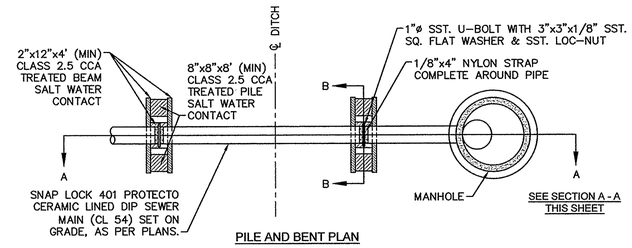

PILE AND BENT PLAN

NOT TO SCALE

NOTES:
1. PILES AND PILE DRIVING SHALL CONFORM TO NCDOT STANDARD SPECIFICATIONS FOR ROADS AND STRUCTURES, JANUARY 2002, SECTIONS 445, 450, 1082-2 & 1084-2.
2. CENTERLINE OF BOLTS TO BE A MINIMUM OF 3" FROM OUTSIDE EDGE OF TIMBER. BOLTS TO BE A MINIMUM OF 3" CENTERLINE TO CENTERLINE.
3. ALL STAINLESS STEEL SHALL BE 316. STAINLESS STRAP TO BE COLD FORMED.
4. PILE SHALL NOT OBSTRUCT FLOW OR CAUSE EROSION OF DITCH/STREAM BANK.
5. MIN. CLASS 54 DIP-ENGINEER MUST DESIGN LOADING.
6. DESIGN SHALL BE APPROVED BY CFPUA.

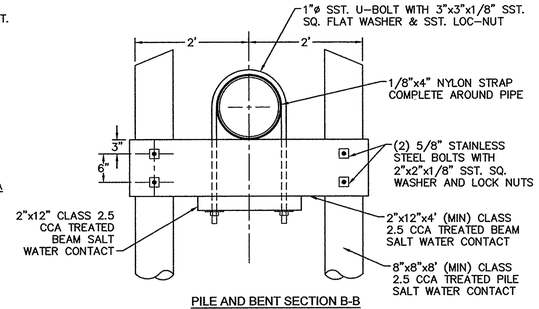

PILE AND BENT SECTION B-B

NOT TO SCALE

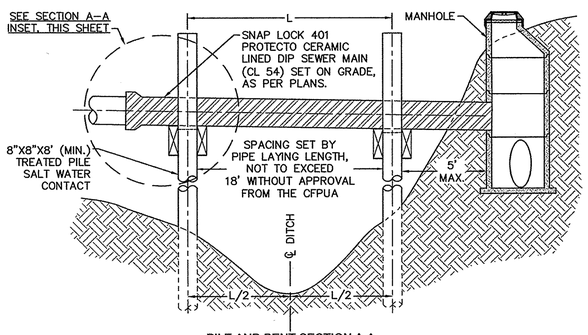

PILE AND BENT SECTION A-A

NOT TO SCALE

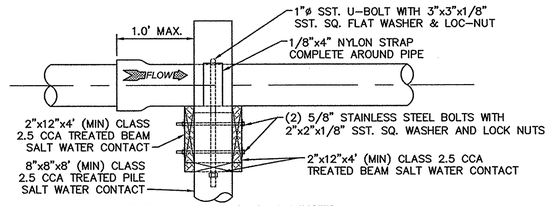

PILE AND BENT SECTION A-A INSET

NOT TO SCALE

SD-20 PILE AND BENT DETAIL

NOT TO SCALE

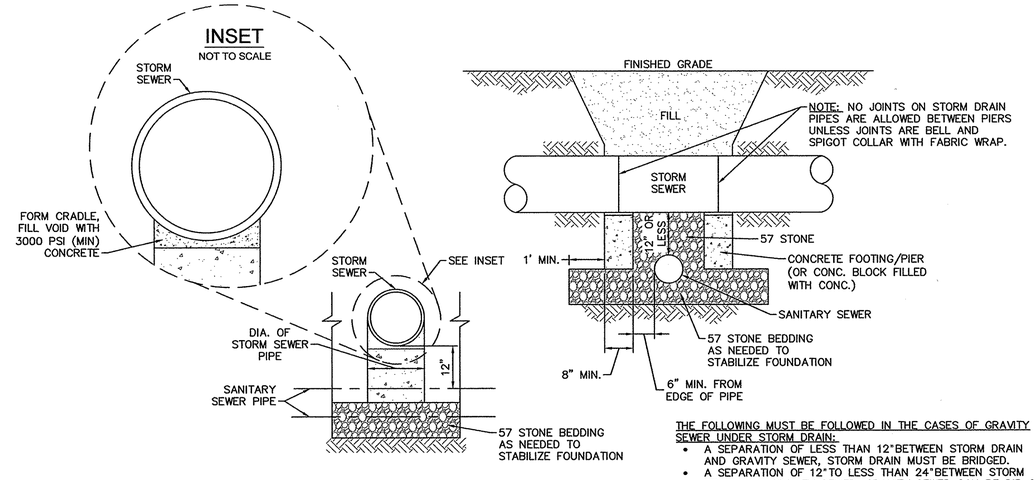

NOTE: NO JOINTS ON STORM DRAIN PIPES ARE ALLOWED BETWEEN PIERS UNLESS JOINTS ARE BELL AND SPIGOT COLLAR WITH FABRIC WRAP.

THE FOLLOWING MUST BE FOLLOWED IN THE CASES OF GRAVITY SEWER UNDER STORM DRAIN:
- A SEPARATION OF LESS THAN 12"BETWEEN STORM DRAIN AND GRAVITY SEWER, STORM DRAIN MUST BE BRIDGED.
- A SEPARATION OF 12" TO LESS THAN 24"BETWEEN STORM DRAIN AND GRAVITY SEWER, GRAVITY SEWER CAN BE DIP OR STORM DRAIN CAN BE BRIDGED. (PER DWR REGULATIONS)
- A SEPARATION OF 24" OR GREATER BETWEEN STORM DRAIN AND GRAVITY SEWER REQUIRES NO BRIDGING OR DIP.

SD-24 STRUCTURAL BRIDGING DETAIL FOR STORMWATER OVER GRAVITY SEWER INSTALLATIONS WITH LESS THAN 12" SEPARATION

NOT TO SCALE

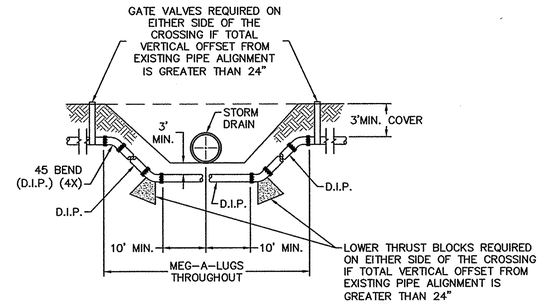

NOTE: USE D.I.P. (CL50 OR BETTER)

SD-18 FORCE MAIN DITCH AND STORM DRAIN CROSSING

NOT TO SCALE

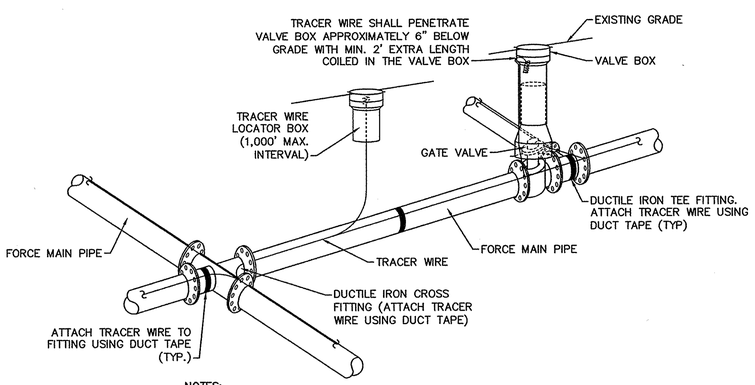

NOTES:
1. TRACER WIRE SHALL BE #10 COPPER SOLID CORE COPPER WIRE WITH GAS AND OIL RESISTANT INSULATION.
2. WIRE SHALL BE STRAPPED TO ALL PVC FORCE MAIN PIPING WITH DUCT TAPE AT 12 FOOT INTERVALS ALONG THE PIPE.
3. SECURE WIRE TO ALL TEE AND CROSS FITTINGS WITH DUCT TAPE.
4. ALL SPLICES IN THE WIRE SHALL BE MADE WITH 3M DBR DIRECT BURY SPLICE KIT AN UNDERGROUND RATED, WATERTIGHT, AND APPROVED SPLICE CONNECTOR OR APPROVED EQUAL.

SD-21 TRACER WIRE DETAIL

NOT TO SCALE

GENERAL NOTES:
1. NO EXCAVATED MATERIAL SHALL BE PLACED IN ANY STREAM, DITCH OR DRAINAGE-WAY.
2. THE CONTRACTOR IS RESPONSIBLE FOR LOCATING ALL UNDERGROUND UTILITIES BEFORE ANY CONSTRUCTION BEGINS.
3. THE CONTRACTOR IS RESPONSIBLE FOR TEMPORARY SEDIMENT AND EROSION CONTROL MEASURES WHILE CONSTRUCTION IS IN PROGRESS.
4. THE CONTRACTOR IS RESPONSIBLE FOR STABILIZATION OF ALL DISTURBED AREAS.
5. THE CONTRACTOR IS RESPONSIBLE FOR LAY DOWN AND STOCKPILE AREAS (TO ARRANGE AND ENSURE COMPLIANCE WITH ALL LOCAL AND STATE REGULATIONS).

THE DETAILS SHOWN HEREON SUPERCEDE CFPUA WRITTEN TECHNICAL SPECIFICATIONS VERSIONS 1.00 - 1.04

THESE DETAILS ARE A WORK PRODUCT OF CFPUA FOR SEWER SYSTEM DESIGN AND CONSTRUCTION AND HAVE BEEN REVIEWED AND APPROVED FOR CONTENT AND GENERAL CONFORMANCE WITH THE SEWER DESIGN FOR THIS PROJECT.

REV:	DESCRIPTION:	DATE:
1	ADDED NOTES TO THE STRUCTURAL BRIDGING DETAIL	03/11/15
2	Revised Tracer Wire Detail	10/20/15
3	Revised Force Main Ditch and Storm Drain Crossing Detail	02/15/16

NORTH CAROLINA PROFESSIONAL SEAL 19851 ENGINEER JOHN S. TUNSTALL

CFPUA SANITARY SEWER

STANDARD DETAILS

CAPE FEAR PUBLIC UTILITY AUTHORITY
235 GOVERNMENT CENTER DRIVE
WILMINGTON, NC 28403
OFFICE: (910)332-6560
Stewardship. Sustainability. Service.

DATE: 1/9/12
SCALE: N/A
DRAWN BY: CFPUA
CHECKED BY: CFPUA
PROJECT NO.: 15048

SHEET NO: SSD-3

S:\Engineering\CFPUA Standard Details\CAD Files\CFPUA-Sewer Details.dwg, 2/15/2016 3:27:00 PM, john.scott