LIDL GROCERY EASTWOOD ROAD

WILMINGTON / NEW HANOVER COUNTY / NORTH CAROLINA

PLAN NOTES

INDEX OF DRAWINGS

C0.00 - COVER SHEET

C1.00 - EXISTING CONDITIONS PLAN

C2.00 - DEMOLITION PLAN

C2.01 - TREE REMOVAL PLAN

C3.00 - SITE INVENTORY MAP

C3.01 - LAYOUT PLAN

C4.00 - GRADING PLAN

C5.00 - EROSION CONTROL PLAN STAGE 1 (NOT INCLUDED)

C5.01 - EROSION CONTROL PLAN STAGE 2 (NOT INCLUDED)

C6.00 - UTILITY PLAN

C7.00 - SITE DETAILS

C7.01 - SITE DETAILS

C7.02 - SITE DETAILS

C7.03 - SITE DETAILS

C7.04 - SITE DETAILS

L1.00 - LANDSCAPE PLAN

L1.01 - LANDSCAPE DETAILS

SITE INFORMATION

SITE DATA

• DEVELOPER:	LIDL US OPERATIONS LLC
• NAME OF DEVELOPMENT:	LIDL GROCERY EASTWOOD ROAD
• PROPERTY OWNER:	WETHERILL FAMILY LAND LLC
• PROJECT ADDRESS:	1451 EASTWOOD ROAD, WILMINGTON, NC
• APPROXIMATE ACREAGE:	353,222 SF / 32,815 SM / 8.11 AC
• ZONING	CB (CD) – COMMUNITY BUSINESS DISTRICT
• CAMA LAND USE CLASSIFICATION:	WATERSHED RESOURCE PROTECTION AREA
• PIN NUMBER/TAX PARCEL NUMBER:	3157-05-17-8646
• PROPOSED USE	RETAIL
• PROPOSED BUILDING AREA:	36,170 SQ. FT.
• BUILDING LOT COVERAGE:	10.23% BUILDING COVERAGE
• NUMBER OF STORIES:	1
• NUMBER OF BUILDINGS:	1
• BUILDING HEIGHT:	33 FEET
• PARKING REQUIRED (MINIMUM):	1 SPACE/400 S.F. = 91 REQ. SPACES
• PARKING REQUIRED (MAXIMUM):	1 SPACE/200 S.F. = 181 SPACES
• PARKING PROVIDED:	138 STANDARD SPACES 6 ACCESSIBLE SPACES
• FRONT BUILDING SETBACK (EASTWOOD RD):	100 FEET (SPECIAL HIGHWAY OVERLAY DISTRICT)
• FRONT BUILDING SETBACK (CAVALIER DR):	25 FEET (ADJACENT TO RESIDENTIAL)
• SIDE BUILDING SETBACK:	20 FEET (ADJACENT TO RESIDENTIAL)
• REAR BUILDING SETBACK:	25 FEET (ADJACENT TO RESIDENTIAL)
• FRONT PARKING SETBACK (MILITARY CUTOFF RD):	50 FEET (SPECIAL HIGHWAY OVERLAY DISTRICT)

DEVELOPER INFORMATION

NAME:	LIDL US OPERATIONS LLC
ADDRESS:	1500 SUNDAY DRIVE, STE 101 RALEIGH, NC 27612
CONTACT:	TURNER ROSE, DEVELOPMENT MANAGE
PHONE:	703-340-7024
EMAIL:	TURNER.ROSE@LIDL.US

VICINITY MAP

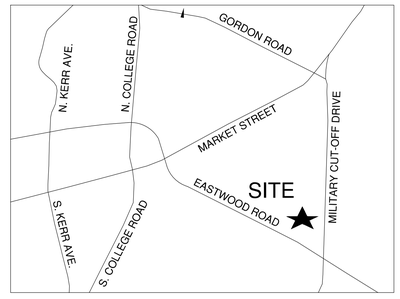

VICINITY MAP - NOT TO SCALE

LITTLE
DIVERSIFIED ARCHITECTURAL CONSULTING

5815 Westpark Drive Charlotte, NC 28217
T: 704.525.6350 F: 704.561.8700

www.littleonline.com

This drawing and the design shown are the property of Little Diversified Architectural Consulting. The reproduction, copying or other use of this drawing without their written consent is prohibited and any infringement will be subject to legal action.

© Little 2015

LITTLE DIVERSIFIED ARCHITECTURAL CONSULTING, INC. REGISTERED ARCHITECTURAL CORPORATION CERT. NO. 50033 NORTH CAROLINA CHARLOTTE, N.C.

NORTH CAROLINA PROFESSIONAL ENGINEER SEAL 036787 TRAVIS G. HAM 02/18/16

NORTH CAROLINA LANDSCAPE ARCHITECT SEAL 835 REGISTERED DAVID C. POWLEN 2/18/16

ISSUE FOR
NOT FOR CONSTRUCTION
TRC REVIEW

ISSUE DATE
02/18/2016

REVISIONS:

NO.	REASON	DATE

PROJECT TEAM
PRINCIPAL IN CHARGE
DAVID POWLEN, RLA, LEED AP
PROJECT MANAGER
DAVID POWLEN, RLA, LEED AP
DESIGN TEAM
CC

PROJECT NAME
LIDL GROCERY
EASTWOOD ROAD

1451 EASTWOOD RD
WILMINGTON, NC

PROJECT NUMBER
124.4360.00

SHEET TITLE
COVER SHEET

SHEET NUMBER
C0.00

THIS PLAN IS PROVIDED FOR INFORMATIONAL PURPOSES ONLY. THIS PLAN IS PREPARED BY OTHERS. LITTLE DIVERSIFIED ARCHITECTURAL CONSULTING IS NOT RESPONSIBLE FOR ANY ERRORS OR OMISSIONS FROM THIS SURVEY.

CALL BEFORE YOU DIG 1-800-632-4949 NORTH CAROLINA ONE CALL SYSTEM

CAUTION!!!
The locations and elevations of existing underground utilities as shown on this drawing are only APPROXIMATE. No guarantee is either expressed or implied as to the completeness of accuracy thereof. The contractor shall be exclusively responsible for determining the exact utility locations and elevations prior to the start of construction

LITTLE
DIVERSIFIED ARCHITECTURAL CONSULTING
5815 Westpark Drive Charlotte, NC 28217
T: 704.525.6350 F: 704.561.8700
www.littleonline.com

This drawing and the design shown are the property of Little Diversified Architectural Consulting. The reproduction, copying or other use of this drawing without their written consent is prohibited and any infringement will be subject to legal action.
© Little 2015

ISSUE FOR
NOT FOR CONSTRUCTION
TRC REVIEW

ISSUE DATE
02/18/2016

REVISIONS

NO.	REASON	DATE

PROJECT TEAM
PRINCIPAL-IN-CHARGE
DAVID POWLEN, RLA, LEED AP
PROJECT MANAGER
DAVID POWLEN, RLA, LEED AP
DESIGN TEAM
CC

PROJECT NAME
LIDL GROCERY
EASTWOOD ROAD

1451 EASTWOOD RD
WILMINGTON, NC

PROJECT NUMBER
124.4360.00

SHEET TITLE
EXISTING CONDITIONS PLAN

SHEET NUMBER
C1.00

GENERAL NOTES:

1. ALL TRAFFIC CONTROL SIGNAGE AND STRIPING TO CONFORM TO THE MANUAL ON UNIFORM TRAFFIC CONTROL DEVICES (M.U.T.C.D.).
2. ALL PAVING CUTS SHALL BE MADE BY SAW CUTS. EXISTING ELEVATIONS SHALL BE FIELD VERIFIED AND MATCHED.
3. CONTRACTOR TO COORDINATE ANY CHANGES IN FIELD CONDITIONS THAT MAY REVISE THE DESIGN WITH ARCHITECT/ENGINEER PRIOR TO PROCEEDING.
4. CONTRACTOR IS RESPONSIBLE TO REPLACE AND/OR REPAIR ANY DAMAGES TO THE EXISTING LANDSCAPE, IRRIGATION, POWER AND/OR HARDSCAPE.

DEMOLITION NOTES:

1. BOUNDARY AND TOPOGRAPHICAL SURVEY INFORMATION IS TAKEN FROM A SURVEY DATED 03/23/2015 AND REVISED 12/04/2015 BY McKIM & CREED, TITLED:
   ALTA/ACSM LAND TITLE SURVEY OF
   DEED BOOK 5616 PAGE 330 – 8.11ACRES
   CITY OF WILMINGTON, NEW HANOVER COUNTY, NORTH CAROLINA
2. THE LOCATIONS OF EXISTING UTILITIES, STORM DRAINAGE STRUCTURES, AND OTHER ABOVE AND BELOW GRADE APPURTENANCES ARE APPROXIMATE AS SHOWN. IT IS THE CONTRACTOR'S RESPONSIBILITY TO DETERMINE THE EXACT LOCATION, SIZE, AND INVERT ELEVATIONS OF SUCH PRIOR TO BEGINNING CONSTRUCTION.
3. INSTALL ALL EROSION CONTROL MEASURES PRIOR TO BEGINNING CONSTRUCTION; SEE SHEET C5.00.
4. NO SOIL DISTURBANCE, SOIL COMPACTION, CONSTRUCTION MATERIALS, OR CONSTRUCTION TRAFFIC ALLOWED BEYOND THE TREE PROTECTION BARRICADES OR WITHIN TREE PROTECTION ZONE.
5. TREE PROTECTION BARRICADES MUST BE INSTALLED PRIOR TO ANY GRADING, DEMOLITION, OR CONSTRUCTION AND SHALL NOT BE REMOVED UNTIL PROJECT IS COMPLETED. TREE PROTECTION BARRICADES ARE INDICATED AS "–o–o–" ON PLANS.
6. PRIOR TO ANY CLEARING, GRADING OR CONSTRUCTION ACTIVITY, TREE PROTECTION FENCING WILL BE INSTALLED AROUND PROTECTED TREES OR GROVES OF TREES. NO CONSTRUCTION WORKERS, TOOLS, MATERIALS, OR VEHICLES ARE PERMITTED WITHIN THE TREE PROTECTION FENCING.

DEMOLITION LEGEND:

A. EXISTING TREE TO BE PROTECTED – SEE DETAIL 7/C7.02
B. REMOVE EXISTING TREES
C. REMOVE EXISTING FENCE
D. SAWCUT AND REMOVED EXISTING SIDEWALK
E. REMOVE EXISTING SIGN
F. SPECIFIED SIGNIFICANT TREE (S)
G. REMOVE EXISTING CURB AND GUTTER

GRAPHIC SCALE
30 0 15 30 60 120
1" = 30'

CAUTION!!!
The locations and elevations of existing underground utilities as shown on this drawing are only APPROXIMATE. No guarantee is either expressed or implied as to the completeness of accuracy thereof. The contractor shall be exclusively responsible for determining the exact utility locations and elevations prior to the start of construction

LITTLE
DIVERSIFIED ARCHITECTURAL CONSULTING
5815 Westpark Drive Charlotte, NC 28217
T: 704.525.6350 F: 704.561.8700
www.littleonline.com

This drawing and the design shown are the property of Little Diversified Architectural Consulting. The reproduction, copying or other use of this drawing without their written consent is prohibited and any infringement will be subject to legal action.
© Little 2015

LITTLE DIVERSIFIED ARCHITECTURAL CONSULTING, INC. REGISTERED ARCHITECTURAL CORPORATION CERT. NO. 50033 NORTH CAROLINA CHARLOTTE, N.C.

NORTH CAROLINA LANDSCAPE ARCHITECT 825 DAVID C. POWELSON 2/18/16

ISSUE FOR
NOT FOR CONSTRUCTION
TRC REVIEW

ISSUE DATE
02/18/2016

REVISIONS

NO.	REASON	DATE

PROJECT TEAM
PRINCIPAL IN CHARGE
DAVID POWLEN, RLA, LEED AP
PROJECT MANAGER
DAVID POWLEN, RLA, LEED AP
DESIGN TEAM
CC

PROJECT NAME
LIDL GROCERY
EASTWOOD ROAD

1451 EASTWOOD RD
WILMINGTON, NC

PROJECT NUMBER
124.4360.00

SHEET TITLE
DEMOLITION PLAN

SHEET NUMBER
C2.00

GENERAL NOTES:

1. ALL TRAFFIC CONTROL SIGNAGE AND STRIPING TO CONFORM TO THE MANUAL ON UNIFORM TRAFFIC CONTROL DEVICES (M.U.T.C.D.).
2. ALL PAVING CUTS SHALL BE MADE BY SAW CUTS. EXISTING ELEVATIONS SHALL BE FIELD VERIFIED AND MATCHED.
3. CONTRACTOR TO COORDINATE ANY CHANGES IN FIELD CONDITIONS THAT MAY REVISE THE DESIGN WITH ARCHITECT/ENGINEER PRIOR TO PROCEEDING.
4. CONTRACTOR IS RESPONSIBLE TO REPLACE AND/OR REPAIR ANY DAMAGES TO THE EXISTING LANDSCAPE, IRRIGATION, POWER AND/OR HARDSCAPE.

DEMOLITION NOTES:

1. BOUNDARY AND TOPOGRAPHICAL SURVEY INFORMATION IS TAKEN FROM A SURVEY DATED 03/23/2015 AND REVISED 12/04/2015 BY McKIM & CREED, TITLED:
   ALTA/ACSM LAND TITLE SURVEY OF
   DEED BOOK 5616 PAGE 330 – 8.11ACRES
   CITY OF WILMINGTON, NEW HANOVER COUNTY, NORTH CAROLINA
2. THE LOCATIONS OF EXISTING UTILITIES, STORM DRAINAGE STRUCTURES, AND OTHER ABOVE AND BELOW GRADE APPURTENANCES ARE APPROXIMATE AS SHOWN. IT IS THE CONTRACTOR'S RESPONSIBILITY TO DETERMINE THE EXACT LOCATION, SIZE, AND INVERT ELEVATIONS OF SUCH PRIOR TO BEGINNING CONSTRUCTION.
3. INSTALL ALL EROSION CONTROL MEASURES PRIOR TO BEGINNING CONSTRUCTION; SEE SHEET C5.00.
4. NO SOIL DISTURBANCE, SOIL COMPACTION, CONSTRUCTION MATERIALS, OR CONSTRUCTION TRAFFIC ALLOWED BEYOND THE TREE PROTECTION BARRICADES OR WITHIN TREE PROTECTION ZONE.
5. TREE PROTECTION BARRICADES MUST BE INSTALLED PRIOR TO ANY GRADING, DEMOLITION, OR CONSTRUCTION AND SHALL NOT BE REMOVED UNTIL PROJECT IS COMPLETED. TREE PROTECTION BARRICADES ARE INDICATED AS "–o–o–" ON PLANS.
6. PRIOR TO ANY CLEARING, GRADING OR CONSTRUCTION ACTIVITY, TREE PROTECTION FENCING WILL BE INSTALLED AROUND PROTECTED TREES OR GROVES OF TREES. NO CONSTRUCTION WORKERS, TOOLS, MATERIALS, OR VEHICLES ARE PERMITTED WITHIN THE TREE PROTECTION FENCING.

DEMOLITION LEGEND:

A. EXISTING TREES TO BE PROTECTED – SEE DETAIL 7/7.02

B. EXISTING TREES TO BE REMOVED

GRAPHIC SCALE

30 0 15 30 60 120

1" = 30'

CAUTION!!!
The locations and elevations of existing underground utilities as shown on this drawing are only APPROXIMATE. No guarantee is either expressed or implied as to the completeness of accuracy thereof. The contractor shall be exclusively responsible for determining the exact utility locations and elevations prior to the start of construction

LITTLE
DIVERSIFIED ARCHITECTURAL CONSULTING

5815 Westpark Drive Charlotte, NC 28217
T: 704.525.6350 F: 704.561.8700
www.littleonline.com

This drawing and the design shown are the property of Little Diversified Architectural Consulting. The reproduction, copying or other use of this drawing without their written consent is prohibited and any infringement will be subject to legal action.

© Little 2015

LITTLE DIVERSIFIED ARCHITECTURAL CONSULTING, INC. REGISTERED PROFESSIONAL CORPORATION NORTH CAROLINA CERT. NO. 50033 CHARLOTTE, N.C.

NORTH CAROLINA LANDSCAPE 835 DAVID C. POWELL 2/18/16

ISSUE FOR
NOT FOR CONSTRUCTION
TRC REVIEW

ISSUE DATE
02/18/2016

REVISIONS

NO.	REASON	DATE

PROJECT TEAM
PRINCIPAL IN CHARGE
DAVID POWLEN, RLA, LEED AP
PROJECT MANAGER
DAVID POWLEN, RLA, LEED AP
DESIGN TEAM
CC

PROJECT NAME
LiDL GROCERY
EASTWOOD ROAD

1451 EASTWOOD RD
WILMINGTON, NC

PROJECT NUMBER
124.4360.00

SHEET TITLE
DEMOLITION
PLAN
TREE REMOVAL
WITH BLD LAYOUT

SHEET NUMBER
C2.01

CALL BEFORE YOU DIG 1-800-632-4949 NORTH CAROLINA ONE CALL SYSTEM

SITE PLAN NOTES

1. SITE AREA: 8.11 AC
2. IMPERVIOUS AREA EXISTING: 0.00 AC (0%)
3. IMPERVIOUS AREA PROPOSED: 2.21 AC (27%)
   - 3.1. BUILDING: (36,170 SQ. FT.) 0.83 AC
   - 3.2. PARKING: (42,260 SQ. FT.) 0.97 AC
   - 3.3. SIDEWALKS: (10,352 SQ. FT.) 0.23 AC
   - 3.4. PERVIOUS PAVING: (27,212 SQ. FT.) 0.62 AC
   - 3.5. HEAVY DUTY CONCRETE: (2,548 SQ. FT.) 0.06 AC
   - 3.6. UTILITY BOX PAD: (49 SQ. FT.)
   - 3.7. CURBS: (4,970 SQ. FT.) 0.11 AC
4. EXCEPTIONAL DESIGN POINTS REQUIRED: 40
5. EXCEPTIONAL DESIGN POINTS PROPOSED: 50
6. IMPERVIOUS AREA PROPOSED FOR SUBDIVISION ADDITION: 28,693 SQ. FT. 0.66 AC (8%)
   - 6.1. BUILDING: (10,235 SQ. FT.) 0.23 AC
   - 6.2. PARKING: (15,183 SQ. FT.) 0.35 AC
   - 6.3. SIDEWALKS: (814 SQ. FT.) 0.02 AC
   - 6.4. PERVIOUS PAVING: (10,164 SQ. FT.) 0.23 AC
   - 6.5. CURBS: (2,461 SQ. FT.) 0.06 AC
7. TOTAL IMPERVIOUS AREA FOR ENTIRE SUBDIVISION: 2.87 AC (35%)

SITE DATA TABULATION

• DEVELOPER:	LIDL US OPERATIONS LLC
• NAME OF DEVELOPMENT:	LIDL GROCERY EASTWOOD ROAD
• PROPERTY OWNER:	WETHERILL FAMILY LAND LLC
• PROJECT ADDRESS:	1451 EASTWOOD ROAD, WILMINGTON, NC
• APPROXIMATE ACREAGE:	353,222 SF / 32,815 SM / 8.11 AC
• ZONING	CB (CD) – COMMUNITY BUSINESS DISTRICT
• CAMA LAND USE CLASSIFICATION:	WATERSHED RESOURCE PROTECTION AREA
• PIN NUMBER/TAX PARCEL NUMBER:	3157-05-17-8646
• PROPOSED USE	RETAIL
• PROPOSED BUILDING AREA:	36,170 SQ. FT.
• BUILDING LOT COVERAGE:	10.23% BUILDING COVERAGE
• NUMBER OF STORIES:	1
• NUMBER OF BUILDINGS:	1
• BUILDING HEIGHT:	33 FEET
• PARKING REQUIRED (MINIMUM):	1 SPACE/400 S.F. = 91 REQ. SPACES
• PARKING REQUIRED (MAXIMUM):	1 SPACE/200 S.F. = 181 SPACES
• PARKING PROVIDED:	138 STANDARD SPACES 6 ACCESSIBLE SPACES
• FRONT BUILDING SETBACK (EASTWOOD RD):	100 FEET (SPECIAL HIGHWAY OVERLAY DISTRICT)
• FRONT BUILDING SETBACK (CAVALIER DR):	25 FEET (ADJACENT TO RESIDENTIAL)
• SIDE BUILDING SETBACK:	20 FEET (ADJACENT TO RESIDENTIAL)
• REAR BUILDING SETBACK:	25 FEET (ADJACENT TO RESIDENTIAL)
• FRONT PARKING SETBACK (MILITARY CUTOFF RD):	50 FEET (SPECIAL HIGHWAY OVERLAY DISTRICT)

ADJACENT PROPERTY OWNERS

- A – WILMINGTON INDEPENDENT LIVING LL – PIN# 3157-06-27-6544 TAX PARCEL# R05600-001-005-000 (EAST) MF-MD (CD)
- B – RESERVE AT MAYFAIRE LLC – PIN# 3157-06-37-0998 & PIN# 3157-18-7124.000 TAX PARCEL# R0500-003-043-000 (NORTH) MX
- C – WILKINSON, WENDY C. – PIN# 3157-17-7252.000 TAX PARCEL# R05608-002-001-000 (SOUTH) R-15
- D – BECK, ANN W. – PIN# 3157-17-4381.000 TAX PARCEL# R05608-001-004-000 (SOUTH) R-15
- E – PIGFORD, JOHN BRADLEY – PIN# 3157-17-3401.000 TAX PARCEL# R05608-001-005-000 (SOUTH/WEST) R-15
- F – THIBODEAUX, CAROLYN W. – PIN# 3157-17-9112.000 TAX PARCEL# R05608-002-020-000 (SOUTH) R-15
- G – VAN, EEDEN LEUNIS – PIN# 3157-17-0588.000 TAX PARCEL# R05608-001-007-000 (SOUTH/WEST) R-15
- H – HOPKINS, JIMMY ALAN HOUSE – PIN# 3157-17-1434.000 TAX PARCEL# R5608-001-006-000 (SOUTH) R-15

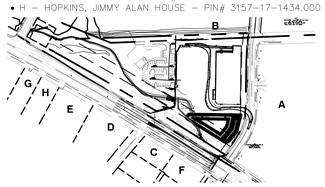

New Hanover County, North Carolina (NC129)

Map Unit Symbol	Map Unit Name
Be	Baymeade fine sand, 1 to 6 percent slopes
JO	Johnston soils
On	Onslow loamy fine sand
Se	Seagate fine sand
Wo	Woodington fine sandy loam

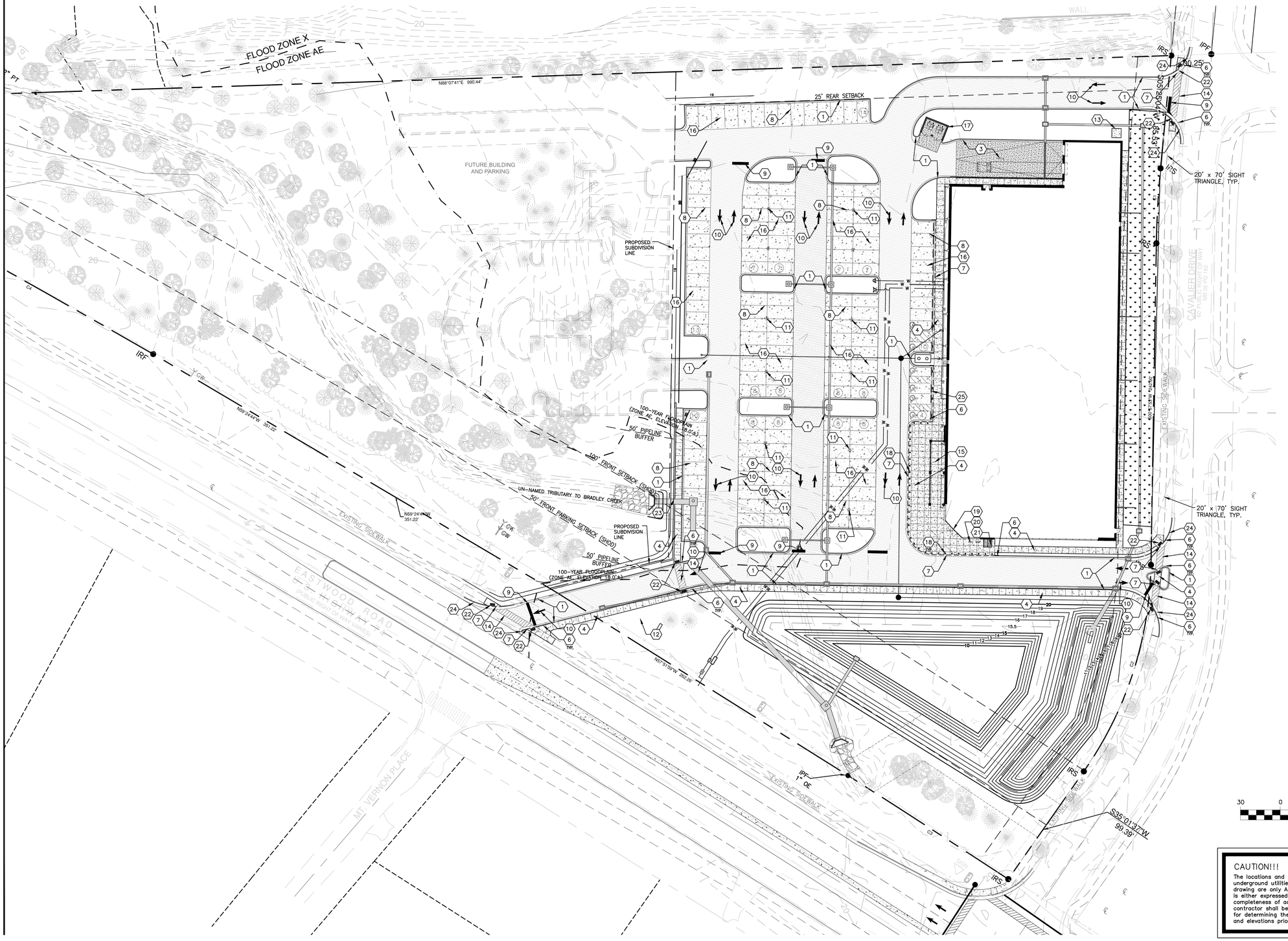

LAYOUT NOTES:

A. ALL TRAFFIC CONTROL SIGNAGE AND STRIPING TO CONFORM TO THE MANUAL ON UNIFORM TRAFFIC CONTROL DEVICES (M.U.T.C.D.) AND NCDOT SUPPLEMENT.

B. THE UTILITIES AND THE LOCATION THEREOF, SHOWN ON THE DRAWINGS, REPRESENT THE DESIGNERS UNDERSTANDING OF EXISTING UTILITIES IN THE CONSTRUCTION AREA. THE CONTRACTOR SHALL FIELD VERIFY THE LOCATION, DEPTH AND EXISTENCE OF ALL UTILITIES (ELECTRICAL, MECHANICAL, WATER, TELEPHONE, GAS ETC.) WITHIN THE CONSTRUCTION AREA WITH THE OWNER AND/OR THE APPROPRIATE UTILITY COMPANY PRIOR TO ANY EXCAVATION. THE OMISSION OF OR THE INCLUSION OF UTILITY LOCATIONS ON THE PLANS IS NOT TO BE CONSIDERED AS THE NONEXISTENCE OF OR A DEFINITE LOCATION. UTILITIES SHALL BE REPAIRED AT THE CONTRACTOR'S EXPENSE. CONTACT U-LOCO (1-800-632-4949) PRIOR TO DIGGING.

C. ALL PAVING CUTS SHALL BE MADE BY SAW CUTS. EXISTING ELEVATIONS SHALL BE FIELD VERIFIED AND MATCHED.

D. CONTRACTOR TO COORDINATE ANY CHANGES IN FIELD CONDITIONS THAT MAY REVISE THE DESIGN WITH ARCHITECT / ENGINEER PRIOR TO PROCEEDING.

E. ANY UNSUITABLE MATERIAL ON SITE IS TO BE QUANTIFIED BY A GEOTECHNICAL ENGINEER, PRIOR TO REMOVING. CONTRACTOR MUST NOTIFY OWNER, OR OWNER'S REPRESENTATIVE IN CASE UNSUITABLE MATERIAL IS UNCOVERED.

F. NEW CONCRETE SIDEWALKS SHALL BE 4" THICK, 3000 PSI PORTLAND CEMENT CONCRETE OVER COMPACTED SUBGRADE WITH 1" DEEP (1/8" RADII) GROOVE JOINTS (C.J.) AND 1/2" EXPANSION JOINTS (⫽) AT INTERVALS INDICATED ON THE PLAN AND ABUTTING ALL RIGID STRUCTURES. IN NO CASES SHALL EXP. JT. SPACING EXCEED 30'-0"

G. ALL DIMENSIONS ARE TO FACE OF CURB OR TO FINISHED FACE OF BUILDING UNLESS NOTED OTHERWISE.

H. ALL RADII ON CURBS SHALL BE 5'-0" UNLESS NOTED OTHERWISE.

I. ALL ACCESSIBLE PARKING SPACES (DELINEATED BY " ♿ " ON PLAN) SHALL DISPLAY APPROVED RESERVED PARKING SPACES SIGNS AS PRESCRIBED BY THE NCDOT MANUAL ON UNIFORM TRAFFIC CONTROL DEVICES AND APPROVED FOR USE UNDER GENERAL STATUTE 20-37.6 AS AMENDED. (R7-8 SIGN, R7-8D "PENALTY" SIGN AND WHERE APPLICABLE "VAN ACCESSIBLE" SIGN). HEIGHT FROM FINISHED GRADE TO BOTTOM OF SIGN IN LOCATION SHALL BE 7'-0".

J. ALL WORK WITHIN THE RIGHT OF WAY OF ALL ROADS AND HIGHWAYS SHALL BE IN ACCORDANCE WITH THE STANDARDS AND SPECIFICATIONS OF THE CITY OF WILMINGTON DEPARTMENT OF TRANSPORTATION. CONTRACTOR SHALL SECURE ALL NECESSARY DRIVEWAY AND ENCROACHMENT PERMITS PRIOR TO CONSTRUCTION. PROVIDE TRAFFIC CONTROL IF NECESSARY DURING CONSTRUCTION WITHIN THE RIGHT OF WAY.

K. ANY FREESTANDING SIGNS ON SITE WILL BE MONUMENT SIGN WITH LANDSCAPING AROUND THE BASE OF THE SIGN – SEE LANDSCAPE PLAN

LAYOUT LEGEND:

1. 1'-6" CONCRETE CURB & GUTTER – SEE DETAIL 12/C7.00
2. LIGHT DUTY ASPHALT– SEE DETAIL 6/C7.00
3. HEAVY DUTY ASPHALT – SEE DETAIL 7/C7.00
4. CONCRETE SIDEWALK – SEE DETAIL 10/C7.01
5. ACCESSIBLE STRIPING AND SIGNAGE (MOUNTED TO PIPE BOLLARD) – SEE DETAIL 9/C7.00
6. ACCESSIBLE CURB & SIDEWALK TAPER – SEE DETAIL 4/C7.00
7. DASHED LINE INDICATES FLUSH CURB – SEE DETAIL 2/C7.00
8. 4" WIDE WHITE PARKING STRIPE
9. 24" WIDE PAINTED BAR (WHITE)
10. PAINTED DIRECTIONAL ARROW – SEE DETAIL 3/C7.02
11. LIGHT POLE – SEE LIGHTING PLAN
12. 6' TALL SIGN
13. TRANSFORMER PAD
14. PAINTED ACCESSIBLE CROSSWALK – SEE DETAIL 4/C7.02
15. CART CORRAL
16. HEAVY DUTY CONCRETE – SEE DETAIL 8/C7.00
17. DUMPSTER 8' MASONRY SCREEN WALL TO MATCH BUILDING – SEE DETAIL 5/C7.01
18. BOLLARD SEE DETAIL 1/C7.00
19. ACCESSIBLE EGRESS LANDING – SEE DETAIL 4/C7.01
20. (2) 3 LOOP BIKE RACKS (HOLDS 5 BIKES EACH FOR TOTAL OF 10) – SEE DETAIL 3/C7.00
21. (2) BIKE LOCKERS (HOLDS 4 BIKES TOTAL)
22. ACCESSIBLE RAMP WITH TRUNCATED DOMES – SEE DETAIL 13/C7.00
23. NEW RETAINING WALL – SEE DETAIL 6/C7.02
24. 2'-6" CONCRETE CURB & GUTTER TO MATCH EXISTING SEE DETAIL 12/C7.00
25. WHEELSTOPS (TOTAL OF 14) – SEE DETAIL 14/C7.00

GRAPHIC SCALE

30 0 15 30 60 120

1" = 30'

CAUTION!!!
The locations and elevations of existing underground utilities as shown on this drawing are only APPROXIMATE. No guarantee is either expressed or implied as to the completeness of accuracy thereof. The contractor shall be exclusively responsible for determining the exact utility locations and elevations prior to the start of construction

CALL BEFORE YOU DIG 1-800-632-4949 NORTH CAROLINA ONE CALL SYSTEM

LITTLE
DIVERSIFIED ARCHITECTURAL CONSULTING
5815 Westpark Drive Charlotte, NC 28217
T: 704.525.6350 F: 704.561.8700
www.littleonline.com

This drawing and the design shown are the property of Little Diversified Architectural Consulting. The reproduction, copying or other use of this drawing without their written consent is prohibited and any infringement will be subject to legal action.
© Little 2015

LITTLE DIVERSIFIED ARCHITECTURAL CONSULTING, INC. REGISTERED ARCHITECTURAL CORPORATION CERT. NO. 50033 NORTH CAROLINA CHARLOTTE, N.C.

NORTH CAROLINA LANDSCAPE ARCHITECT 885 DAVID C. POWLEN 2/18/16

ISSUE FOR
NOT FOR CONSTRUCTION TRC REVIEW

ISSUE DATE
02/18/2016

REVISIONS

NO.	REASON	DATE

PROJECT TEAM
PRINCIPAL IN CHARGE
DAVID POWLEN, RLA, LEED AP
PROJECT MANAGER
DAVID POWLEN, RLA, LEED AP
DESIGN TEAM
CC

PROJECT NAME
LIDL GROCERY
EASTWOOD ROAD

1451 EASTWOOD RD
WILMINGTON, NC

PROJECT NUMBER
124.4360.00

SHEET TITLE
SITE INVENTORY MAP

SHEET NUMBER
C3.00

SITE PLAN NOTES

1. SITE AREA: 8.11 AC
2. IMPERVIOUS AREA EXISTING: 0.00 AC (0%)
3. IMPERVIOUS AREA PROPOSED: 1.84 AC (23%)
   - 3.1. BUILDING: (36,170 SQ. FT.) 0.83 AC
   - 3.2. PARKING: (34,715 SQ. FT.) 0.79 AC
   - 3.3. SIDEWALKS: (9,962.32 SQ. FT.) 0.22 AC
4. EXCEPTIONAL DESIGN POINTS REQUIRED: 40
5. EXCEPTIONAL DESIGN POINTS PROPOSED: 50

SITE DATA TABULATION

• DEVELOPER:	LIDL US OPERATIONS LLC
• NAME OF DEVELOPMENT:	LIDL GROCERY EASTWOOD ROAD
• PROPERTY OWNER:	WETHERILL FAMILY LAND LLC
• PROJECT ADDRESS:	1451 EASTWOOD ROAD, WILMINGTON, NC
• APPROXIMATE ACREAGE:	353,222 SF / 32,815 SM
• ZONING	CB (CD) – COMMUNITY BUSINESS DISTRICT
• CAMA LAND USE CLASSIFICATION:	WATERSHED RESOURCE PROTECTION AREA
• PIN NUMBER/TAX PARCEL NUMBER:	3157-05-17-8646
• PROPOSED USE	RETAIL
• PROPOSED BUILDING AREA:	36,170 SQ. FT.
• BUILDING LOT COVERAGE:	10.23% BUILDING COVERAGE
• NUMBER OF STORIES:	1
• NUMBER OF BUILDINGS:	1
• BUILDING HEIGHT:	33 FEET
• PARKING REQUIRED (MINIMUM):	1 SPACE/400 S.F. = 91 REQ. SPACES
• PARKING REQUIRED (MAXIMUM):	1 SPACE/200 S.F. = 181 SPACES
• PARKING PROVIDED:	138 STANDARD SPACES 6 ACCESSIBLE SPACES
• FRONT BUILDING SETBACK (EASTWOOD RD):	100 FEET (SPECIAL HIGHWAY OVERLAY DISTRICT)
• FRONT BUILDING SETBACK (CAVALIER DR):	25 FEET (ADJACENT TO RESIDENTIAL)
• SIDE BUILDING SETBACK:	20 FEET (ADJACENT TO RESIDENTIAL)
• REAR BUILDING SETBACK:	25 FEET (ADJACENT TO RESIDENTIAL)
• FRONT PARKING SETBACK (MILITARY CUTOFF RD):	50 FEET (SPECIAL HIGHWAY OVERLAY DISTRICT)

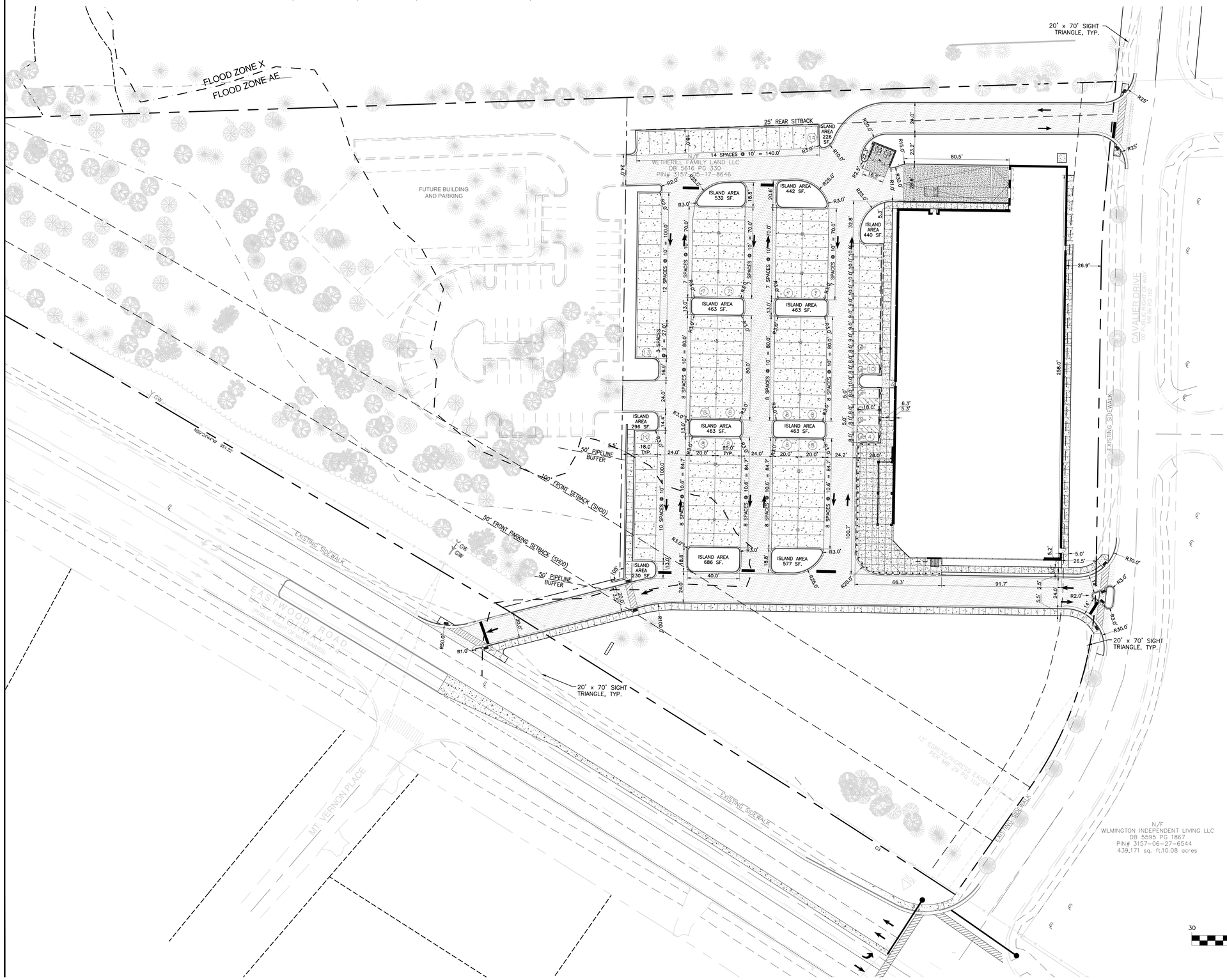

CAUTION!!!
The locations and elevations of existing underground utilities as shown on this drawing are only APPROXIMATE. No guarantee is either expressed or implied as to the completeness of accuracy thereof. The contractor shall be exclusively responsible for determining the exact utility locations and elevations prior to the start of construction

GRAPHIC SCALE
30 0 15 30 60 120
1" = 30'

CALL BEFORE YOU DIG 1-800-632-4949 NORTH CAROLINA ONE CALL SYSTEM

LITTLE
DIVERSIFIED ARCHITECTURAL CONSULTING
5815 Westpark Drive Charlotte, NC 28217
T: 704.525.6350 F: 704.561.8700
www.littleonline.com

This drawing and the design shown are the property of Little Diversified Architectural Consulting. The reproduction, copying or other use of this drawing without their written consent is prohibited and any infringement will be subject to legal action.

© Little 2015

LITTLE DIVERSIFIED ARCHITECTURAL CONSULTING, INC. REGISTERED ARCHITECTURAL CORPORATION CERT. NO. 50033 NORTH CAROLINA CHARLOTTE, NC

NORTH CAROLINA REGISTERED LANDSCAPE ARCHITECT 885 DAVID C. POWLEN 2/18/16

ISSUE FOR
NOT FOR CONSTRUCTION
TRC REVIEW

ISSUE DATE
02/18/2016

REVISIONS

NO.	REASON	DATE

PROJECT TEAM
PRINCIPAL IN CHARGE
DAVID POWLEN, RLA, LEED AP
PROJECT MANAGER
DAVID POWLEN, RLA, LEED AP
DESIGN TEAM
CC

PROJECT NAME
LIDL GROCERY
EASTWOOD ROAD

1451 EASTWOOD RD
WILMINGTON, NC

PROJECT NUMBER
124.4360.00

SHEET TITLE
LAYOUT PLAN
DIMENSIONS

SHEET NUMBER
C3.01

GENERAL NOTES:

1. ALL TRAFFIC CONTROL SIGNAGE AND STRIPING TO CONFORM TO THE MANUAL ON UNIFORM TRAFFIC CONTROL DEVICES (M.U.T.C.D.).
2. THE UTILITIES AND THE LOCATION THEREOF, SHOWN ON THE DRAWINGS, REPRESENT THE DESIGNERS UNDERSTANDING OF EXISTING UTILITIES IN THE CONSTRUCTION AREA. THE CONTRACTOR SHALL FIELD VERIFY THE LOCATION, DEPTH AND EXISTENCE OF ALL UTILITIES (ELECTRICAL, MECHANICAL, WATER, TELEPHONE, GAS ETC.) WITHIN THE CONSTRUCTION AREA WITH THE OWNER AND/OR THE APPROPRIATE UTILITY COMPANY PRIOR TO ANY EXCAVATION. THE OMISSION OF OR THE INCLUSION OF UTILITY LOCATIONS ON THE PLANS IS NOT TO BE CONSIDERED AS THE NONEXISTENCE OF OR A DEFINITE LOCATION. UTILITIES SHALL BE REPAIRED AT THE CONTRACTOR'S EXPENSE. CONTACT U-LOCO (1-800-632-4949) PRIOR TO DIGGING.
3. ALL PAVING CUTS SHALL BE MADE BY SAW CUTS. EXISTING ELEVATIONS SHALL BE FIELD VERIFIED AND MATCHED.
4. CONTRACTOR TO COORDINATE ANY CHANGES IN FIELD CONDITIONS THAT MAY REVISE THE DESIGN WITH ARCHITECT / ENGINEER PRIOR TO PROCEEDING.
5. CONTRACTOR IS RESPONSIBLE TO REPLACE AND/OR REPAIR ANY DAMAGES TO THE EXISTING LANDSCAPE, IRRIGATION, POWER AND/OR HARDSCAPE.
6. ANY UNSUITABLE MATERIAL ON SITE IS TO BE QUANTIFIED BY A GEOTECHNICAL ENGINEER, PRIOR TO REMOVING. CONTRACTOR MUST NOTIFY OWNER, OR OWNER'S REPRESENTATIVE IN CASE UNSUITABLE MATERIAL IS UNCOVERED.
7. NON-STANDARD ITEMS (I.E. PAVERS, IRRIGATION SYSTEMS, ETC.) IN THE RIGHT-OF-WAY REQUIRE A RIGHT-OF-WAY ENCROACHMENT AGREEMENT WITH THE CHARLOTTE DEPARTMENT OF TRANSPORTATION BEFORE INSTALLATION.

GRADING NOTES:

1. ALL NEW CONTOURS AND SPOT ELEVATIONS ARE SHOWN AS FINISHED GRADES. THE GRADING CONTRACTOR MUST MAKE ALLOWANCES FOR THICKNESS OF PAVING SECTIONS, CONCRETE SLABS, AND 4" OF REDISTRIBUTED TOPSOIL WHEN GRADING.
2. THE ENTIRE SITE WITHIN THE LIMIT OF CONSTRUCTION SHALL BE GRADED TO DRAIN FREELY. ALL UNPAVED AREAS DISTURBED BY CONSTRUCTION, WHETHER INSIDE OR OUTSIDE OF THE LIMIT OF CONSTRUCTION, SHALL BE FINE GRADED AND SEEDED TO ESTABLISH A PERMANENT LAWN.
3. CONTRACTORS MUST COORDINATE ALL DRAINAGE STRUCTURE GRATES AND TOP ELEVATIONS SHOWN WITH ACTUAL FIELD CONDITIONS TO INSURE THAT GRATES AND TOPS ARE FLUSH WITH FINISHED GRADE.
4. CONTRACTOR SHALL PROTECT ALL EXISTING UTILITIES (INCLUDING SANITARY, STORM DRAINAGE, AND WATER) FROM DAMAGE DURING CONSTRUCTION. ALL UNDERGROUND UTILITIES EXPOSED DURING CONSTRUCTION OR THOSE LEFT WITH LESS THAN ACCEPTABLE MINIMUM EARTH COVER SHALL BE RELOCATED AS DETERMINED BY THE CIVIL ENGINEER.
5. NO SLOPES SHALL BE GRADED STEEPER THAN 2:1, UNLESS INDICATED OTHERWISE INDICATED.
6. APPROVAL OF THIS PLAN IS NOT AN AUTHORIZATION TO GRADE ADJACENT PROPERTIES. WHEN FIELD CONDITIONS WARRANT OFF-SITE GRADING, PERMISSION MUST BE OBTAINED FROM THE AFFECTED PROPERTY OWNERS.

STORM DRAINAGE TABLE

FROM	TO	PIPE SIZE (in)	PIPE LENGTH (ft)	PIPE SLOPE (ft/ft)	UP INV.	DOWN INV.	UPSTREAM STRUCTURE GRATE ELEV	PIPE CLASS
DI-21-FUT	DI-19-FUT	18	110	0.0050	18.70	18.15	22.60	III
DI-20-FUT	DI-19-FUT	15	86	0.0050	18.70	18.27	22.60	III
DI-19-FUT	DI-17-FUT	24	68	0.0050	17.65	17.31	22.60	III
DI-18-FUT	DI-17-FUT	15	94	0.0050	18.70	18.23	22.60	III
DI-17-FUT	CI-16	24	61	0.0050	17.31	17.01	22.60	III
CI-16	CI-15	30	132	0.0050	16.51	15.85	21.90	III
CI-15	CI-14	30	31	0.0050	15.85	15.69	21.75	III
CI-14A	CI-14	15	100	0.0050	17.50	17.00	21.50	III
CI-14	CI-5	30	71	0.0050	15.69	15.34	21.75	III
JB-1A	JB-1	18	32	0.0050	17.50	17.34	22.00	III
JB-1	JB-2	18	88	0.0050	17.34	16.90	22.00	III
JB-2A	JB-2	15	32	0.0050	17.50	17.34	22.00	III
JB-2	JB-3	24	93	0.0050	16.40	15.94	22.00	III
JB-3A	JB-3	24	32	0.0050	17.50	17.34	22.00	III
JB-3	JB-4	24	100	0.0050	15.94	15.44	22.00	III
JB-4A	JB-4	15	32	0.0050	17.50	17.34	22.00	III
JB-4	CI-5	30	33	0.0050	14.94	14.77	22.00	III
CI-5	CI-6	36	117	0.0050	14.27	13.69	21.50	III
CI-6	CI-7	42	117	0.0170	13.19	11.20	21.50	III
TD-1	DI-11	8	12	0.0060	16.80	16.73	19.50	HDPE
DI-11	DI-10	15	74	0.0050	16.14	15.77	21.50	III
CI-13	CI-12	15	22	0.0050	16.80	16.69	21.50	III
CI-12	DI-10	15	14	0.0050	16.69	16.62	21.50	III
DI-10	DI-9	18	306	0.0050	15.52	13.99	21.10	III
DI-9	CI-8	30	22	0.0050	12.99	12.88	20.80	III
CI-8	CI-7	30	24	0.0050	12.88	12.76	20.80	III
CI-7	POND-1	42	32	0.0050	11.20	11.04	20.80	III

ALL STORM PIPE SHOWN IN TABLE ABOVE SHALL BE CLASS III RCP, UNLESS OTHERWISE NOTED.

- ADS N-12 ST IB (SOILTIGHT) PIPE

ALL ROOF LEADERS SHALL BE 8" PVC (SCHEDULE 40).

USE THE FOLLOWING STANDARD DRAWINGS FOR STORM STRUCTURES:

CI	NCDOT STD. 840.01 or 840.02
DI	NCDOT STD. 840.14 or 840.15
YI	ADS NYLOPLAST DRAINAGE INLET (18"x18" GRATE)
HW	NCDOT STD. 838.80
JB	NCDOT STD. 840.31 or 840.32
TD	ACO HEAVY-DUTY TRENCH DRAIN (H-20 LOADING) or EQUIVALENT

GRAPHIC SCALE

30 0 15 30 60 120

1" = 30'

CAUTION!!!

The locations and elevations of existing underground utilities as shown on this drawing are only APPROXIMATE. No guarantee is either expressed or implied as to the completeness of accuracy thereof. The contractor shall be exclusively responsible for determining the exact utility locations and elevations prior to the start of construction

CALL BEFORE YOU DIG 1-800-632-4949 NORTH CAROLINA ONE CALL SYSTEM

LITTLE
DIVERSIFIED ARCHITECTURAL CONSULTING

5815 Westpark Drive Charlotte, NC 28217
T: 704.525.6350 F: 704.561.8700
www.littleonline.com

This drawing and the design shown are the property of Little Diversified Architectural Consulting. The reproduction, copying or other use of this drawing without their written consent is prohibited and any infringement will be subject to legal action.

© Little 2015

ISSUE FOR

ISSUE DATE
12/08/2015

REVISIONS

NO.	REASON	DATE

PROJECT TEAM
PRINCIPAL-IN-CHARGE
DAVID POWLEN, RLA, LEED AP
PROJECT MANAGER
SHANE BRANDWOOD, RLA
DESIGN TEAM
CC

PROJECT NAME
LiDL GROCERY
EASTWOOD ROAD

1451 EASTWOOD RD
WILMINGTON, NC

PROJECT NUMBER
124.4360.00

SHEET TITLE
GRADING PLAN

SHEET NUMBER
C4.00

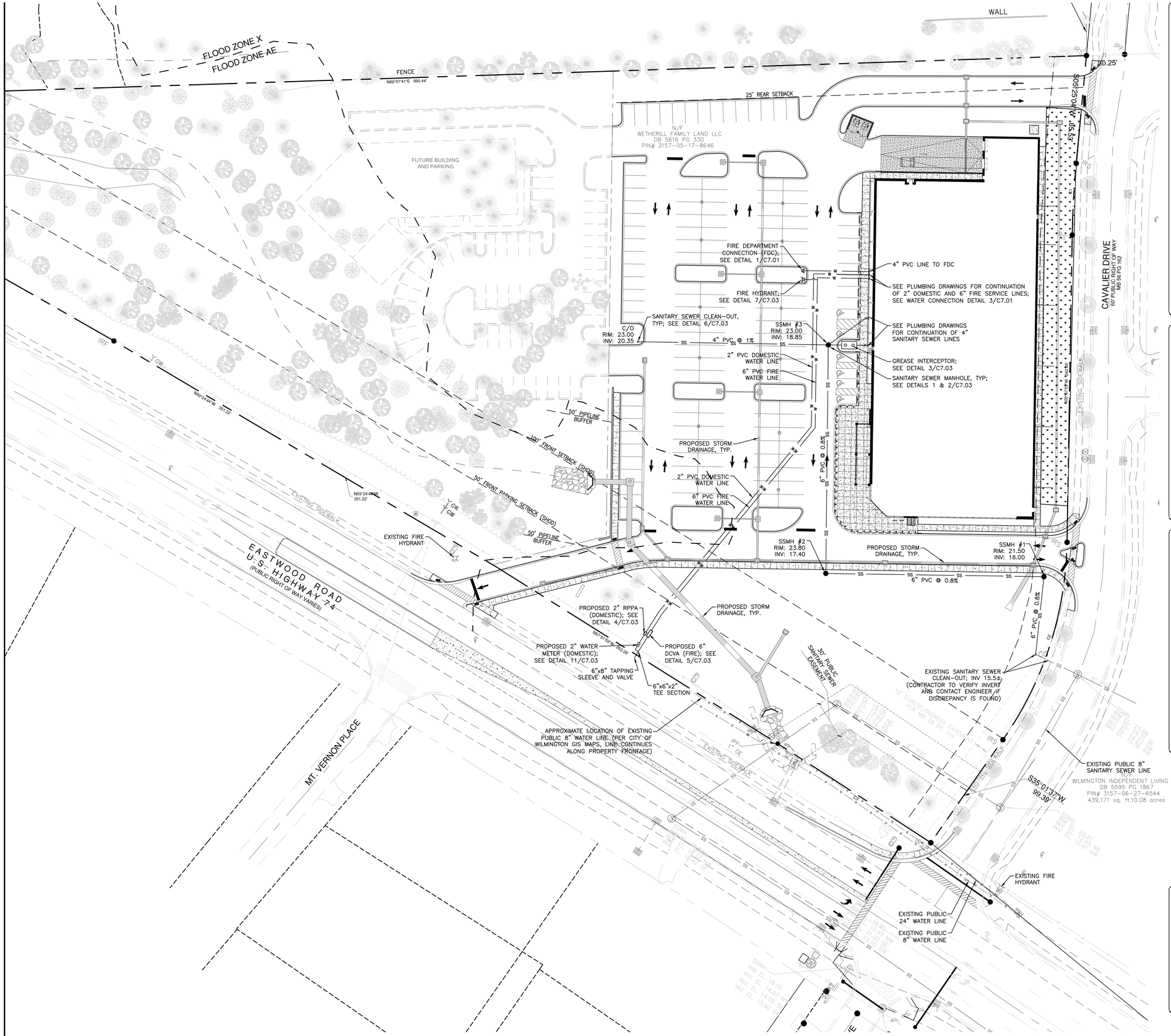

GRAPHIC SCALE

30 0 15 30 60 120

1" = 30'

GENERAL NOTES:

1. NO EXCAVATED MATERIAL SHALL BE PLACED IN ANY STREAM, DITCH, OR DRAINAGE-WAY.
2. THE CONTRACTOR IS RESPONSIBLE FOR LOCATING ALL UNDERGROUND UTILITIES BEFORE ANY CONSTRUCTION BEGINS.
3. THE CONTRACTOR IS RESPONSIBLE FOR TEMPORARY SEDIMENT AND EROSION CONTROL MEASURES WHILE CONSTRUCTION IS IN PROGRESS,
4. THE CONTRACTOR IS RESPONSIBLE FOR STABILIZATION OF ALL DISTURBED AREAS.
5. THE CONTRACTOR IS RESPONSIBLE FOR LAY DOWN AND STOCKPILE AREAS (TO ARRANGE AND ENSURE COMPLIANCE WITH ALL LOCAL AND STATE REGULATIONS).
6. ALL TRAFFIC CONTROL SIGNAGE AND STRIPING TO CONFORM TO THE MANUAL ON UNIFORM TRAFFIC CONTROL DEVICES (M.U.T.C.D.).
7. THE UTILITIES AND THE LOCATION THEREOF, SHOWN ON THE DRAWINGS, REPRESENT THE DESIGNERS UNDERSTANDING OF EXISTING UTILITIES IN THE CONSTRUCTION AREA. THE CONTRACTOR SHALL FIELD VERIFY THE LOCATION, DEPTH AND EXISTENCE OF ALL UTILITIES (ELECTRICAL, MECHANICAL, WATER, TELEPHONE, GAS ETC.) WITHIN THE CONSTRUCTION AREA WITH THE OWNER AND/OR THE APPROPRIATE UTILITY COMPANY PRIOR TO ANY EXCAVATION. THE OMISSION OF OR THE INCLUSION OF UTILITY LOCATIONS ON THE PLANS IS NOT TO BE CONSIDERED AS THE NONEXISTENCE OF OR A DEFINITE LOCATION. UTILITIES SHALL BE REPAIRED AT THE CONTRACTOR'S EXPENSE. CONTACT U-LOCO (1-800-632-4949) PRIOR TO DIGGING.
8. ALL PAVING CUTS SHALL BE MADE BY SAW CUTS. EXISTING ELEVATIONS SHALL BE FIELD VERIFIED AND MATCHED.
9. CONTRACTOR TO COORDINATE ANY CHANGES IN FIELD CONDITIONS THAT MAY REVISE THE DESIGN WITH ARCHITECT / ENGINEER PRIOR TO PROCEEDING.
10. CONTRACTOR IS RESPONSIBLE TO REPLACE AND/OR REPAIR ANY DAMAGES TO THE EXISTING LANDSCAPE, IRRIGATION, POWER AND/OR HARDSCAPE.
11. ANY UNSUITABLE MATERIAL ON SITE IS TO BE QUANTIFIED BY A GEOTECHNICAL ENGINEER, PRIOR TO REMOVING. CONTRACTOR MUST NOTIFY OWNER, OR OWNER'S REPRESENTATIVE IN CASE UNSUITABLE MATERIAL IS UNCOVERED.

WATER DISTRIBUTION NOTES:

1. WATER LINE TO BE INSTALLED PER CAPE FEAR PUBLIC UTILITY AUTHORITY (CFPUA) REQUIREMENTS.
2. CFPUA REQUIRED BACKFLOW PREVENTER SHALL BE INSPECTED BY A CERTIFIED TESTER PRIOR TO PLACING WATER SYSTEM IN SERVICE.
3. THERE SHALL BE NO TAPS, PIPING BRANCHES, UNAPPROVED BY-PASS PIPING HYDRANTS, FIRE DEPARTMENT CONNECTION POINTS OR OTHER WATER USING APPURTENANCES CONNECTED TO THE SUPPLY LINE BETWEEN ANY WATER METER AND ITS CFPUA-REQUIRED BACKFLOW PREVENTER ASSEMBLY.
4. MAINTAIN MINIMUM 10' HORIZONTAL SEPARATION BETWEEN WATER LINE AND OTHER UTILITY LINES.
5. CONTRACTOR TO LOCATE BUILDING TIE-INS PER PLUMBING PLANS.
6. ALL WATER LINES 4" AND LARGER SHALL BE PVC (C900, SDR 14 OR LESS) PRESSURE CLASS 200 UNLESS OTHERWISE NOTED. ALL WATER LINES 3" AND SMALLER SHALL BE PVC (ASTM D-2241, SDR 21 OR LESS) PRESSURE CLASS 200 UNLESS OTHERWISE NOTED.
7. ALL PVC WATER LINES TO BE INSTALLED WITH TRACER TAPE, SEE DETAIL 9/C7.03.
8. PROVIDE THRUST BLOCKS AT ALL BENDS AND TEES ON FIRE SERVICE LINE, SEE DETAIL 8/C7.03.

SANITARY SEWER NOTES:

1. SEWER GUARDS REQUIRED AT ALL MANHOLES, STAINLESS STEEL SEWER GUARDS REQUIRED AT MANHOLES LOCATED IN TRAFFIC AREAS.
2. SERVICES SHALL BE PERPENDICULAR TO MAIN AND TERMINATE AT RIGHT-OF-WAY LINE. SERVICES IN CUL-DE-SACS ARE REQUIRED TO BE PERPENDICULAR, OR MUST ORIGINATE IN MANHOLE AND TERMINATE AT RIGHT-OF-WAY LINE.
3. ALL SERVICES TYING INTO DUCTILE IRON MAINS SHALL BE CONSTRUCTED OF CLASS 50 D.I.P., WITH PROTECTO 401 CERAMIC EPOXY LINING.
4. MINIMUM 10' UTILITIES EASEMENT PROVIDED ALONG THE FRONTAGE OF ALL LOTS AND AS SHOWN FOR NEW DEVELOPMENT.
5. NO FLEXIBLE COUPLINGS SHALL BE USED.
6. ALL STAINLESS STEEL FASTENERS SHALL BE 316.
7. CONTRACTOR TO LOCATE LATERAL TIE-INS PER PLUMBING PLANS.
8. MAINTAIN MINIMUM 10' HORIZONTAL SEPARATION BETWEEN WATER LINE AND OTHER UTILITY LINES.
9. PLACE CLEANOUTS ON SANITARY LINES PER PLUMBING CODE REQUIREMENTS.
10. CONTRACTOR TO PROVIDE RECORD DRAWINGS TO OWNER.
11. ALL SANITARY SEWER CONNECTIONS PER CFPUA STANDARDS.
12. SANITARY SEWER PIPE TO BE PVC SDR-35 OR LESS, UNLESS OTHERWISE NOTED.

WATER AND SEWER CAPACITY:

CURRENT USE

WATER: 0 GPD (VACANT)
SEWER: 0 GPD (VACANT)

PROPOSED USE

PROPOSED BUILDING SQUARE FOOTAGE = 36,000 SF
PER STATE GUIDELINES, GROCERY STORE DEMAND IS 130 GALLONS PER DAY, PER 1,000 SQUARE FEET OF BUILDING SPACE:

(36,000 SF) x (130 GPD / 1,000 SF) = 4,680 GPD

WATER: 4,680 GPD
SEWER: 4,680 GPD

CAUTION!!!
The locations and elevations of existing underground utilities as shown on this drawing are only APPROXIMATE. No guarantee is either expressed or implied as to the completeness of accuracy thereof. The contractor shall be exclusively responsible for determining the exact utility locations and elevations prior to the start of construction

CALL BEFORE YOU DIG 1-800-632-4949 NORTH CAROLINA ONE CALL SYSTEM

LITTLE
DIVERSIFIED ARCHITECTURAL CONSULTING
5815 Westpark Drive Charlotte, NC 28217
T: 704.525.6350 F: 704.561.8700
www.littleonline.com

This drawing and the design shown are the property of Little Diversified Architectural Consulting. The reproduction, copying or other use of this drawing without their written consent is prohibited and any infringement will be subject to legal action.
© Little 2015

LITTLE DIVERSIFIED ARCHITECTURAL CONSULTING, INC. REGISTERED ARCHITECTURAL CORPORATION CERT. NO. 50033 NORTH CAROLINA CHARLOTTE, N.C.

NORTH CAROLINA PROFESSIONAL ENGINEER SEAL 036887 FRANK G. MAY 02/18/16

ISSUE FOR
NOT FOR CONSTRUCTION TRC REVIEW
ISSUE DATE
02/18/2016

REVISIONS

NO.	REASON	DATE

PROJECT TEAM
PRINCIPAL IN CHARGE
DAVID POWLEN, RLA, LEED AP
PROJECT MANAGER
DAVID POWLEN, RLA, LEED AP
DESIGN TEAM
FGM
PROJECT NAME
LiDL GROCERY
EASTWOOD ROAD

1451 EASTWOOD RD
WILMINGTON, NC
PROJECT NUMBER
124.4360.00
SHEET TITLE
UTILITY PLAN
SHEET NUMBER
C6.00

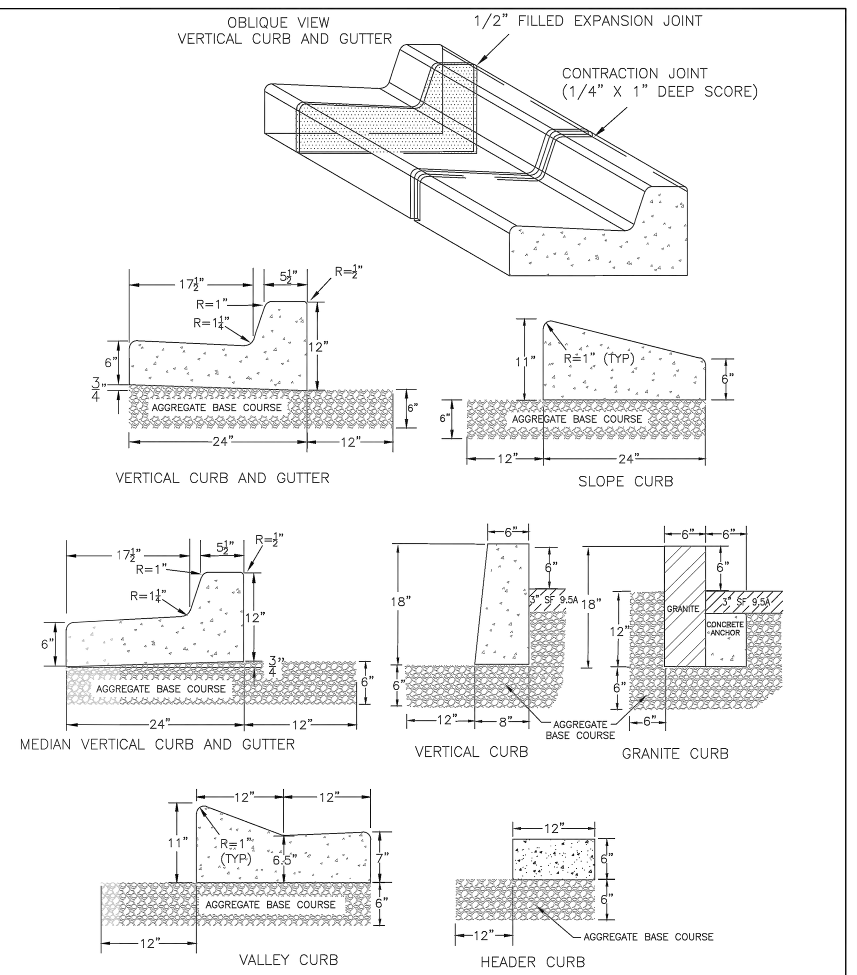

NOTES:
1. EXPANSION JOINT MATERIAL TO COMPLY WITH CURRENT NCDOT STANDARDS
2. 50' MAX EXPANSION JOINT SPACING, 10' MAX CONTRACTION JOINT SPACING
3. MINIMUM INSTALLATION LENGTH IS 5 FT.
4. CONCRETE TO BE 3000 PSI MIN
5. VERTICAL CURB AND GUTTER BASE CAN BE SLOPED 3/4" OR USE A FLAT BASE

	STANDARD DETAIL	
DATE: AUGUST, 2011	CURBING	CITY OF WILMINGTON NORTH CAROLINA
DRAWN: PB/JSR		CITY OF WILMINGTON ENGINEERING PO BOX 1810 WILMINGTON N.C. 28402 (910) 341-7807
CHECKED: DEC		
SCALE NOT TO SCALE		SD 3-11

12 CURBING
NOT TO SCALE

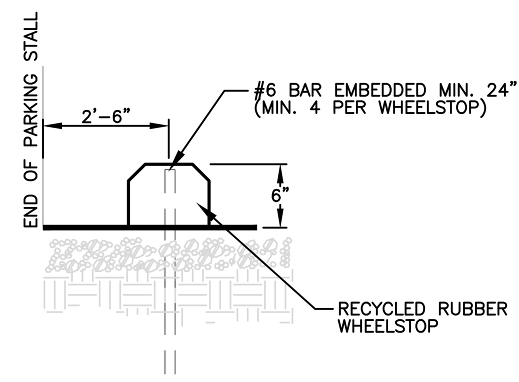

14 RECYCLED RUBBER WHEELSTOP
NOT TO SCALE

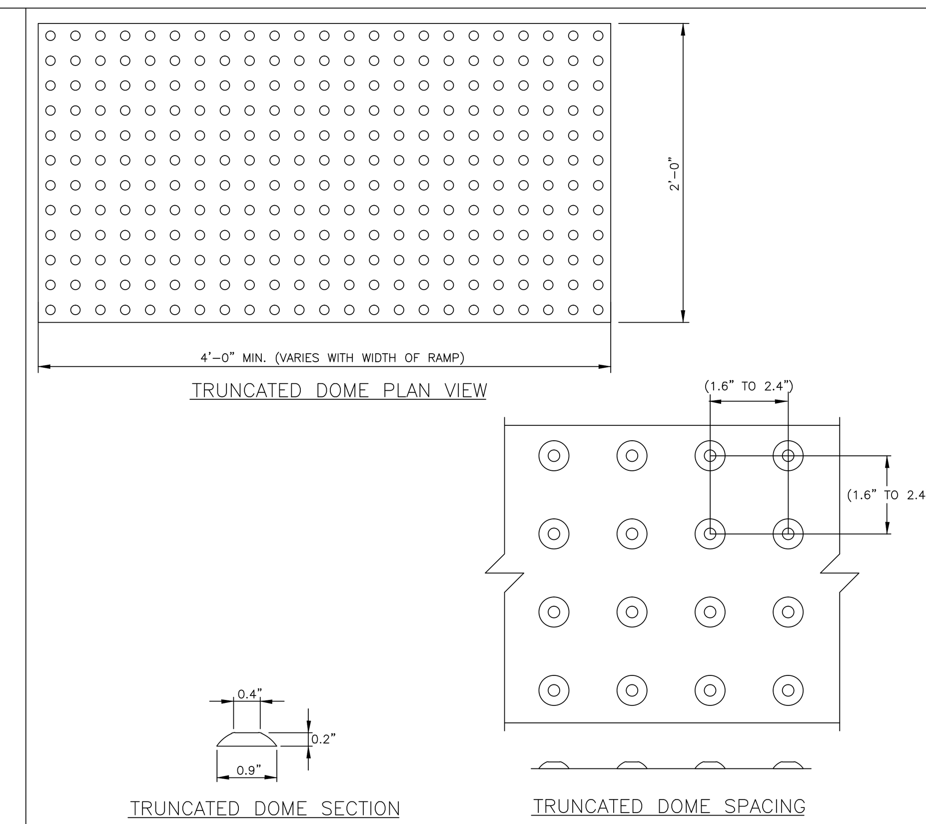

NOTES:

1. ALL DETECTABLE WARNING DEVICES USED IN NEW CONSTRUCTION SHALL BE OF A RIDGID PRECAST OR EMBEDDED PRODUCT APPROVED BY THE CITY ENGINEER. RETRO FIT MATS WILL ONLY BE ALLOWEED ON EXISTING RAMPS WITH PRIOR APPROVAL OF THE CITY ENGINEER FOR MATERIAL TYPE AND INSTALLATION (IE. RESURFACING).
2. WIDTH OF DETECTABLE WARNING AREA SHALL BE A MINIMUM OF 4 FEET AND VARY WITH WIDTH OF RAMP.
3. LENGTH OF DETECTABLE WARNING AREA SHALL BE 2 FEET REGARDLESS OF SECTION WIDTH.
4. DETECTABLE WARNING AREA CAN BE SQUARE WHERE USED IN A CURB RADIUS.
5. DETECTABLE WARNING DOMES SHALL BE ALIGNED ON A SQUARE GRID IN THE PREDOMINANT DIRECTION OF OF TRAVEL TO PERMIT WHEELS TO ROLL BETWEEN DOMES.
6. DETECTABLE WARNING AREA SHALL BE COLORED BLACK IN ALL LOCATIONS.
7. IF PAVERS ARE TO BE USED, PAVERS SHALL BE 6" THICK AND CAST FROM 5000 psi CONCRETE.
8. MATS ARE TO BE RIGID WITH TURN DOWN EDGES EMBEDDED IN CONCRETE TO ELIMINATE TRIP HAZARD.

13 TRUNCATED DOMES
NOT TO SCALE

NOTES:

1. ALL 12"x18" ACCESSIBLE SIGNS (R7–8 & R7–1) SHALL BE MOUNTED AT 84" FROM GRADE TO BOTTOM EDGE OF SIGN FACE (MUTCD).
2. REFER TO MANUAL ON UNIFORM TRAFFIC CONTROL DEVICES, (MUTCD) U.S. DEPARTMENT OF TRANSPORTATION AND NORTH CAROLINA DEPARTMENT OF TRANSPORTATION SUPPLEMENT.
3. IF ACCESSIBLE ROUTE IS A RAISED SIDEWALK AREA, THEN RAMPS ARE REQUIRED AT LOADING ZONE AREA.
4. SEE LAYOUT PLAN C1.00 FOR SITE SPECIFIC LAYOUT OF ACCESSIBLE SPACES AND SIGNS. INFORMATION SHOWN BELOW IS FOR GENERAL LAYOUT OF SIGNAGE AND STRIPING.
5. SIGN COLORS TO BE IN COMPLIANCE WITH THE MORE STRINGENT NC STATE REQUIREMENTS.
6. SIGN COLORS SHALL BE AS FOLLOWS:THE STATE OF NORTH CAROLINA REQUIRES ISA MUST BE WHITE ON BLUE. IT ALSO REQUIRES SIGN BACKGROUND WHITE WITH GREEN LETTERING, BORDER AND GREEN ARROW IF PROVIDED. NC4.1.2, NC GS 136–30(C), FIGURE NC4.1.2.
7. ALL PARKING STRIPING DIMENSIONS ARE TO CENTER OF THE 4" STRIPE

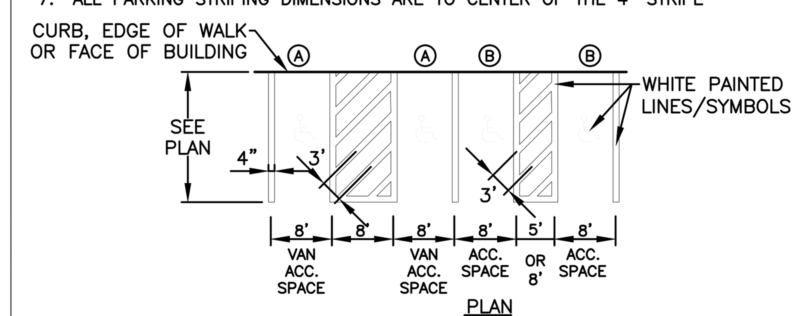

NOTE:
PAINT SYMBOL BELOW ONTO PAVED SURFACE WITH 2 COATS OF WHITE PAINT

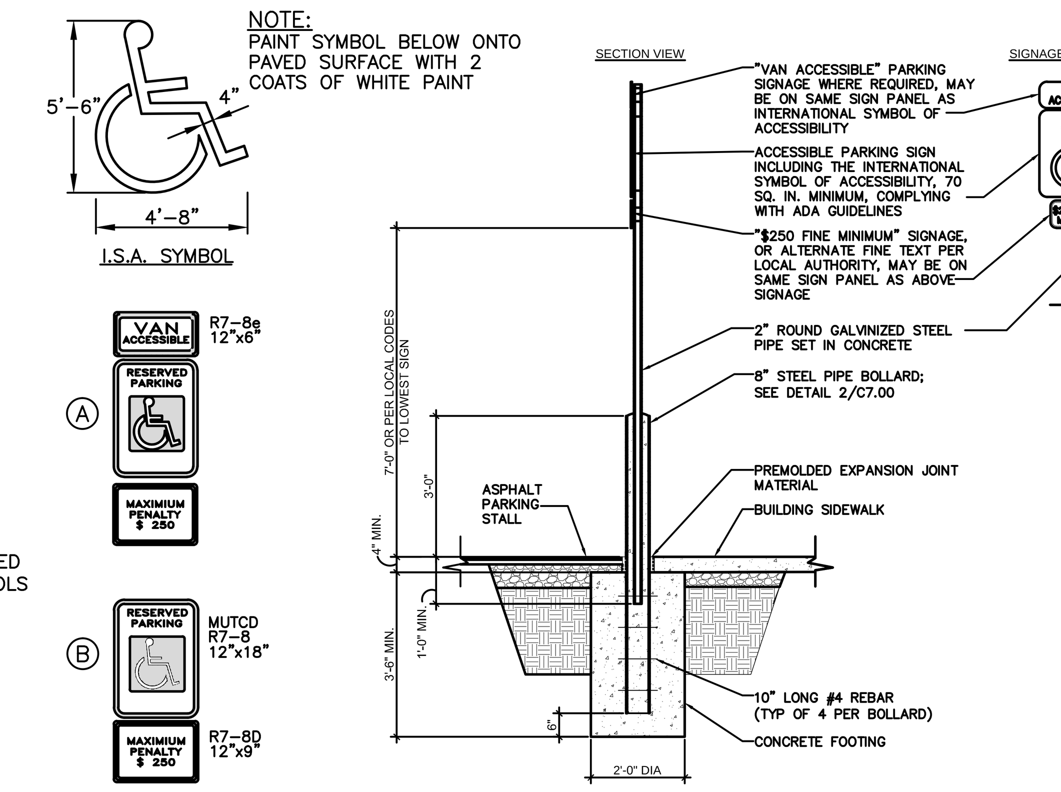

9 ACCESSIBLE STRIPING & SIGNAGE
NOT TO SCALE

NOTES:
1. A CONTROL JOINT 1'' DEEP WITH 1/8" RADII SHALL BE REQUIRED IN THE CONCRETE PAVING AT 12' ON CENTER OR AS DELINEATED ON SITE LAYOUT PLAN. A 1/2" MAX EXPANSION JOINT WILL BE REQUIRED WHERE THE PAVING JOINS ANY RIGID STRUCTURE. A SAWED SCORE JOINT MAY BE USED IN LIEU OF EXPANSION JOINT EXCEPT AGAINST RIGID STRUCTURES.
2. ALL CONCRETE TO BE AT LEAST 4,500 P.S.I. IN 28 DAYS.
3. 1/2" MAX EXPANSION MATERIAL WHERE PAVING ABUTS CURB AND GUTTER.
4. SLOPE SHALL NOT EXCEED 1.5% IN ANY DIRECTION.
5. ALL NEW CONCRETE PARKING SPACES TO MEET FLUSH WITH ADJACENT ASPHALT PAVING AND CURB AND GUTTER UNLESS OTHERWISE NOTED.

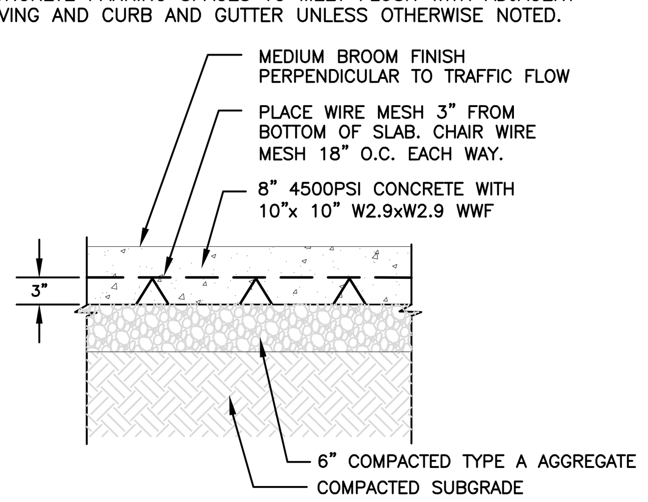

8 HEAVY DUTY CONCRETE
NOT TO SCALE

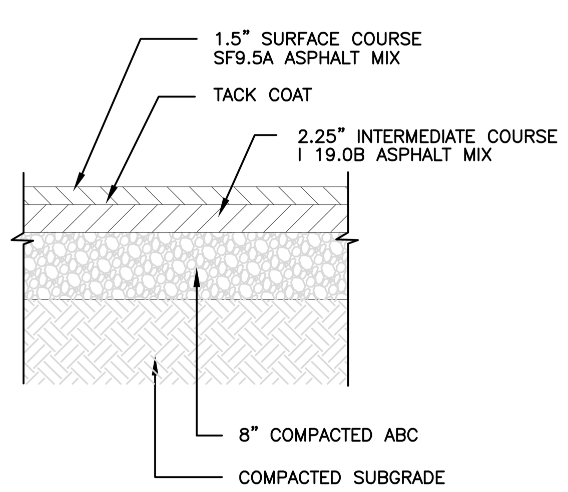

7 HEAVY–DUTY ASPHALT
NOT TO SCALE

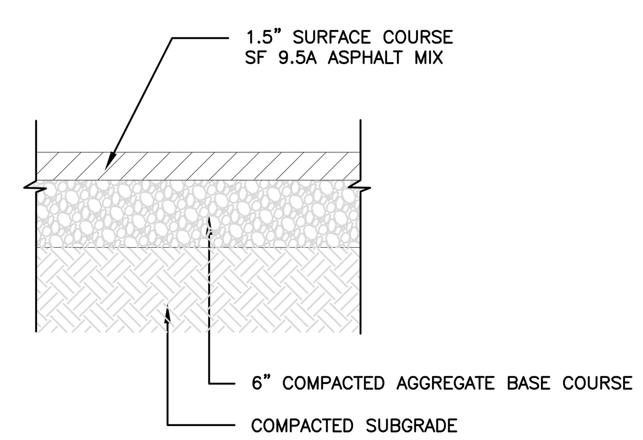

6 LIGHT–DUTY ASPHALT
NOT TO SCALE

CONCRETE NOTES:

1. UNLESS NOTED OTHERWISE, ALL CONCRETE SHALL ATTAIN A MINIMUM COMPRESSIVE STRENGTH OF 3000 PSI AT 28 DAYS.
2. AGGREGATES SHALL BE NATURAL SAND AND ROCK CONFORMING TO ASTM C33.
3. CEMENT SHALL BE PORTLAND CEMENT CONFORMING TO ASTM C–150, TYPE I OR II, LOW ALKALI OR AS REQUIRED TO SATISFY SITE SOIL CONDITIONS AS DETERMINED BY THE PROJECT SOILS ENGINEER.
4. WATER SHALL BE POTABLE, CLEAN AND FREE FROM INJURIOUS AMOUNTS OF OIL, ACIDS, ALKALIS, SALTS, ORGANIC MATERIALS, OR OTHER SUBSTANCES THAT MAY BE DELETERIOUS TO CONCRETE OR REINFORCEMENT.
5. ADMIXTURES TO BE USED IN CONCRETE SHALL BE SUBJECT TO PRIOR APPROVAL BY THE ENGINEER.
6. MAXIMUM PERMISSIBLE WATER–CEMENT RATIOS FOR CONCRETE WHEN STRENGTH DATA FROM TRIAL BATCHES ARE NOT AVAILABLE SHALL CONFORM TO TABLE 4.5 OF ACI STANDARD 318–77 OR BASED ON SULFATE CONTENT OF THE SITE SOILS, AS DETERMINED BY THE SOILS ENGINEER. THE LOWER WATER–CEMENT RATIO SHALL GOVERN.
7. CONCRETE SHALL BE CURED WHILE IN A MOIST CONDITION FOR AT LEAST THE FIRST 7 DAYS AFTER PLACEMENT. METHODS FOR ACCELERATED CURING SHALL HAVE PRIOR APPROVAL OF THE ENGINEER.
8. THE FOLLOWING MINIMUM CLEAR DISTANCES BETWEEN REINFORCING STEEL AND FACE OF CONCRETE SHALL BE MAINTAINED UNLESS NOTED OTHERWISE:
   SLABS ON GRADE..CENTER OF SLAB
   CONCRETE BELOW GRADE, FORMED..2"
   CONCRETE BELOW GRADE, UNFORMED
   (POURED AGAINST EARTH)...3"
   CONCRETE EXPOSED TO WEATHER..1–1/2"

5 CONCRETE NOTES
NOT TO SCALE

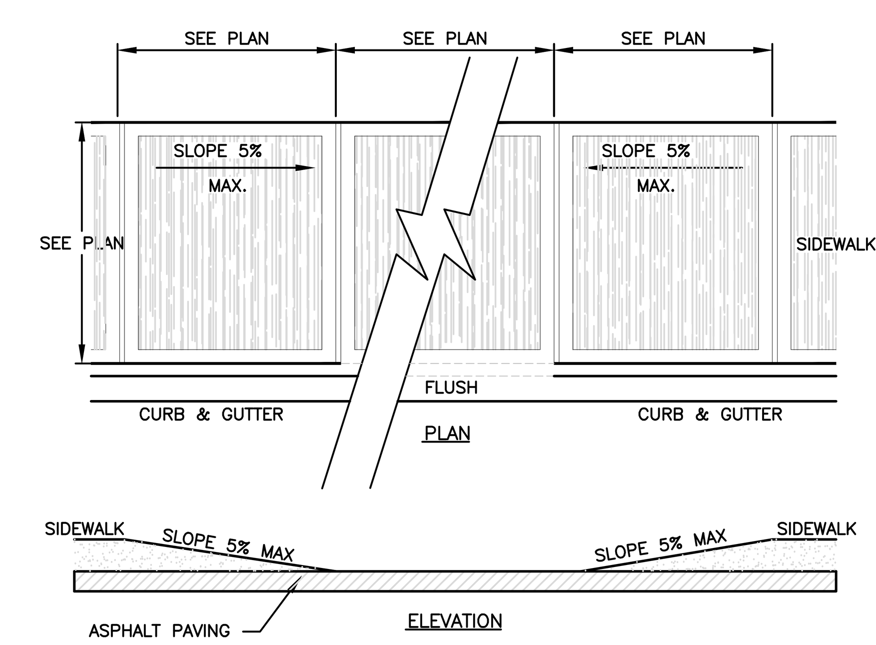

4 ACCESSIBLE SIDEWALK & CURB TAPER
NOT TO SCALE

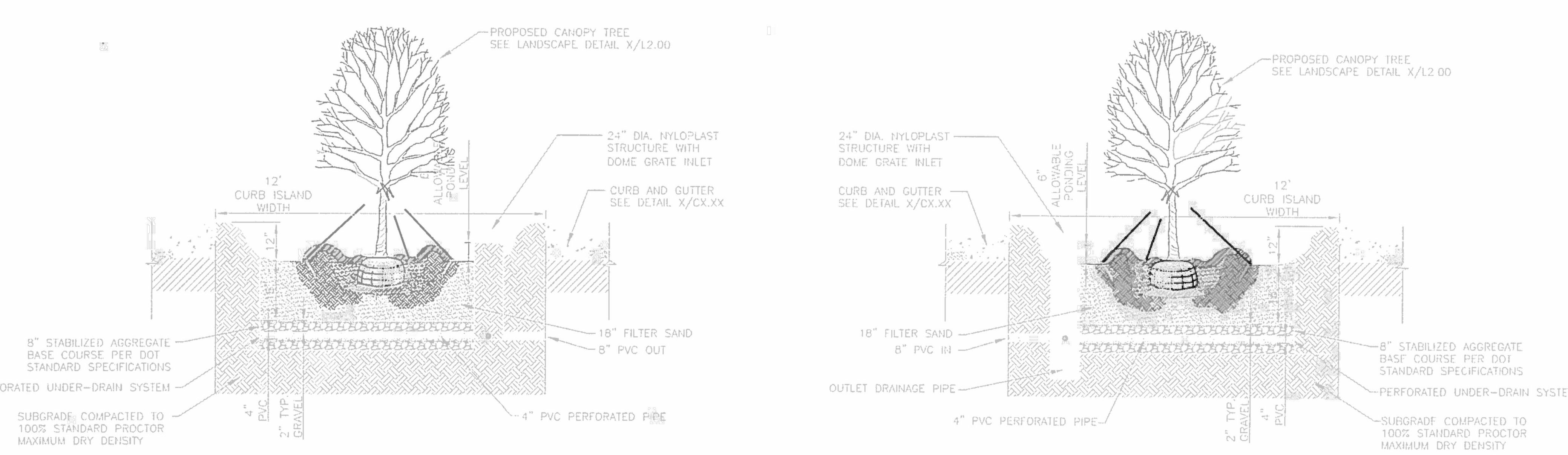

15 CURB ISLAND RAIN GARDEN
NOT TO SCALE

NOTES:
1. BIKE RACKS SHOULD BE INSTALLED AS PER MANUFACTURER'S RECOMMENDED INSTALLATION PROCEDURES.
2. ALTERNATIVE BIKE RACKS MAY BE USED BUT ARE SUBJECT TO APPROVAL BY ARCHITECT
3. BIKE RACK IS TO ACCOMMODATE A MIN. OF THREE BIKES.

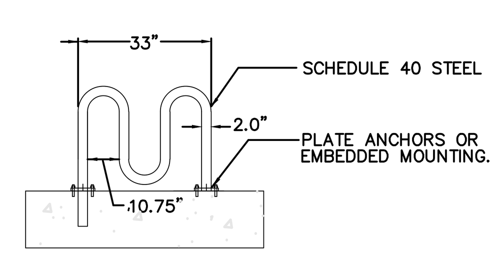

3 BICYCLE RACK
NOT TO SCALE

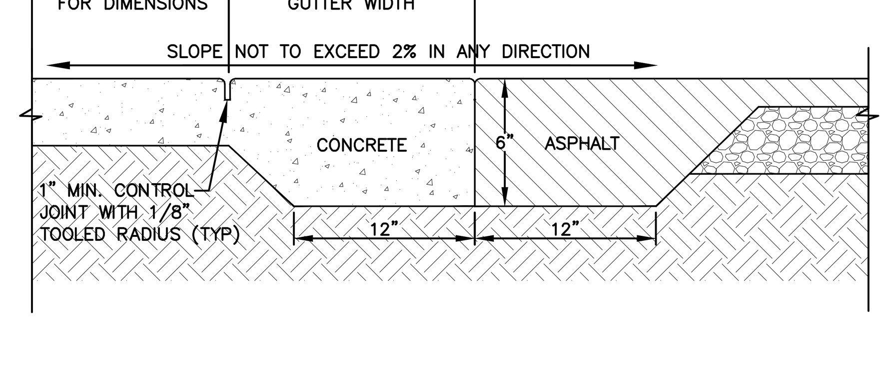

2 ACCESSIBLE FLUSH CURB
NOT TO SCALE

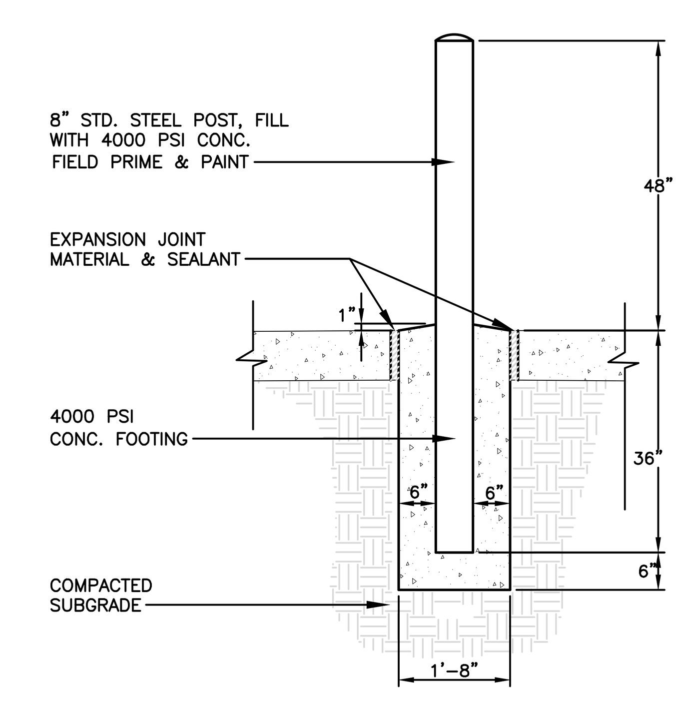

1 PIPE BOLLARD
NOT TO SCALE

LITTLE
DIVERSIFIED ARCHITECTURAL CONSULTING
5815 Westpark Drive Charlotte, NC 28217
T: 704.525.6350 F: 704.561.8700
w w w . l i t t l e o n l i n e . c o m

This drawing and the design shown are the property of Little Diversified Architectural Consulting. The reproduction, copying or other use of this drawing without their written consent is prohibited and any infringement will be subject to legal action.
© Little 2015

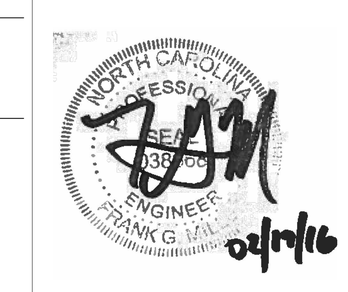

ISSUE FOR
NOT FOR CONSTRUCTION
TRC REVIEW

ISSUE DATE
02/18/2016

REVISIONS

NO.	REASON	DATE

PROJECT TEAM
PRINCIPAL IN CHARGE
DAVID POWLEN, RLA, LEED AP
PROJECT MANAGER
DAVID POWLEN, RLA, LEED AP
DESIGN TEAM
FGM

PROJECT NAME
LiDL GROCERY
EASTWOOD ROAD

1451 EASTWOOD RD
WILMINGTON, NC

PROJECT NUMBER
124.4360.00

SHEET TITLE
SITE DETAILS

SHEET NUMBER
C7.00

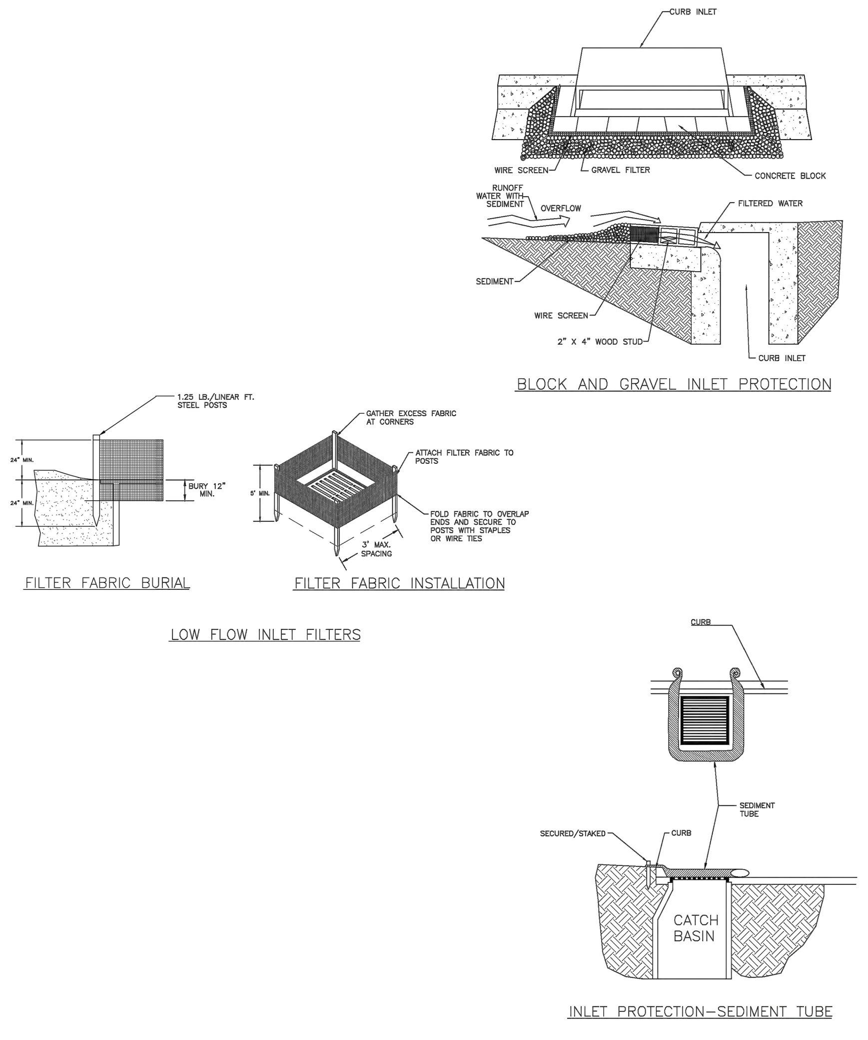

STANDARD DETAIL		
DATE: SEPTEMBER, 2012	GUIDELINES FOR SEDIMENT CONTROL BMPs	CITY OF WILMINGTON NORTH CAROLINA
DRAWN BY JSR		CITY OF WILMINGTON ENGINEERING PO BOX 1810 WILMINGTON, NC 28402 (910) 341–7807
CHECKED BY BDR, P.E.		
SCALE NOT TO SCALE	SHEET 2 OF 2	SD 3-104

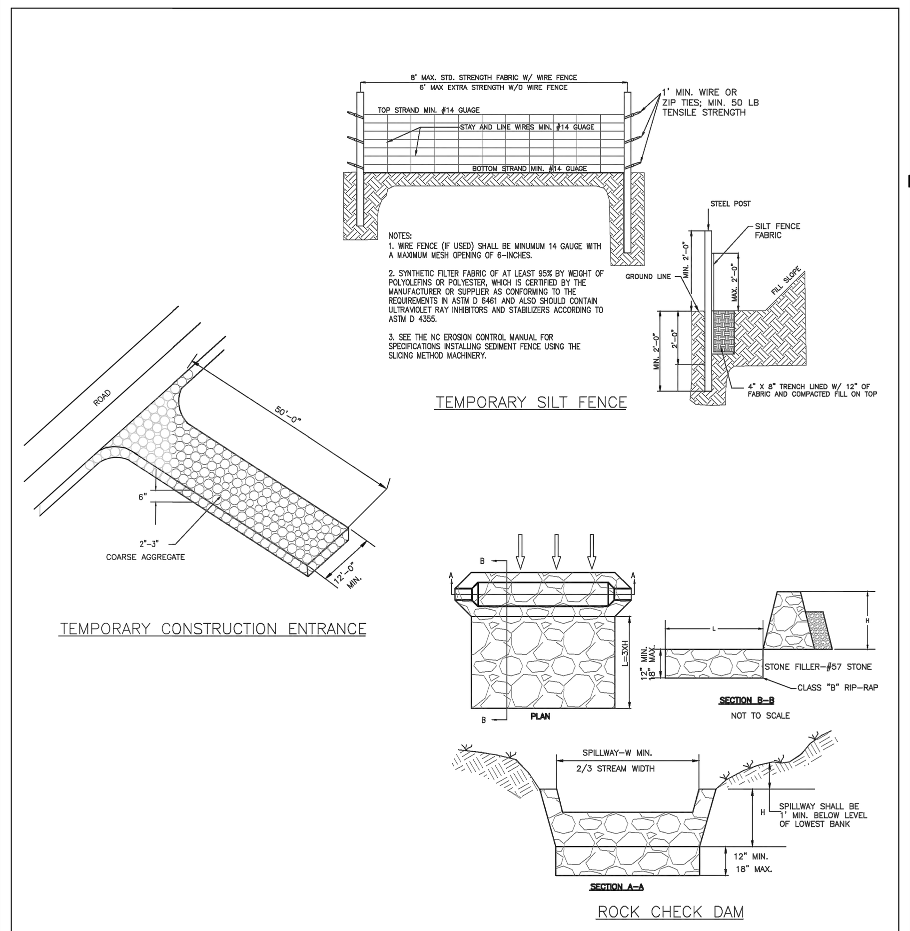

LAND DISTURBING ACTIVITIES MUST BE MANAGED TO AVOID SEDIMENT RUN–OFF AND POLLUTION FROM CONSTRUCTION SITES.

WHERE PERMITTED LOCALLY BY NEW HANOVER COUNTY, AN EROSION AND SEDIMENT CONTROL (E&SC) PLAN WILL CONTAIN DETAILS AND GUIDANCE. E&SC PLANS ARE PERFORMANCE BASED AND OFTEN REQUIRE ADJUSTMENTS OR REPAIRS.

AS PERMITTED BY NCDENR, DIVISIONS OF WATER QUALITY AND LAND RESOURCES, A STORMWATER PERMIT WILL REQUIRE SELF–MONITORING REPORTS (WEEKLY, >1" RAIN EVENT) OR SELF–INSPECTION REPORTS AFTER EACH CONSTRUCTION PHASE, BASED ON ELEMENTS OF THE E&SC PLAN.

STANDARD DETAIL		
DATE: SEPTEMBER, 2012	GUIDELINES FOR SEDIMENT CONTROL BMPs	CITY OF WILMINGTON NORTH CAROLINA
DRAWN BY JSR		CITY OF WILMINGTON ENGINEERING PO BOX 1810 WILMINGTON, NC 28402 (910) 341–7807
CHECKED BY BDR, P.E.		
SCALE NOT TO SCALE	SHEET 1 OF 2	SD 3-104

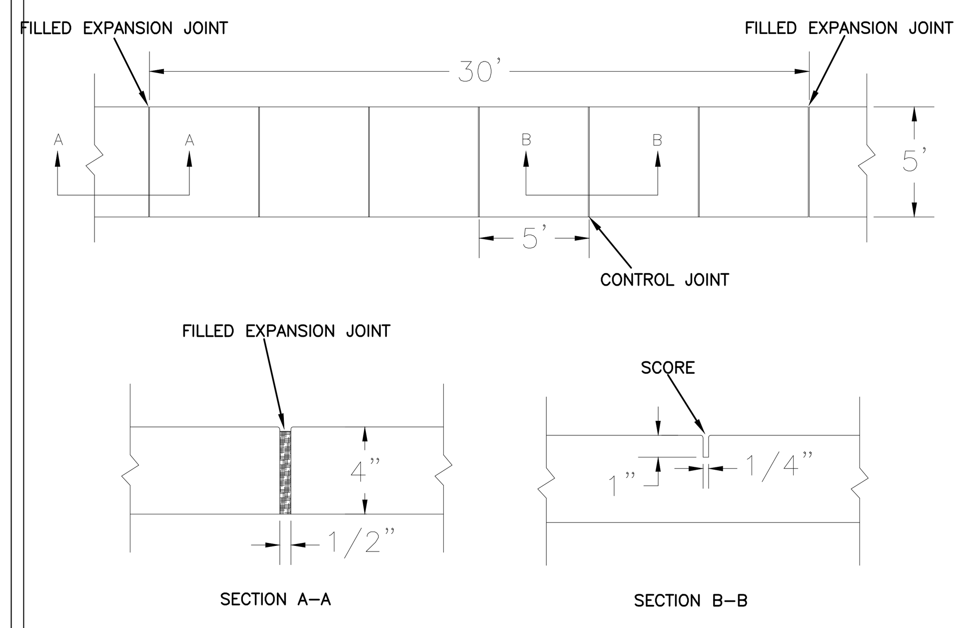

NOTES:
1. JOINT MATERIAL TO COMPLY WITH CURRENT NCDOT STANDARDS.
2. SANITARY SEWER CLEAN–OUTS, WATER METERS, MANHOLES, AND VALVE LIDS TO BE LOCATED OUTSIDE SIDEWALK WHERE FEASIBLE.
3. MINIMUM SIDEWALK WIDTH TO BE 6' MINIMUM IF PLACED AT BACK OF CURB.
4. CONCRETE FOR ALL SIDEWALKS (EXCEPT ANY PORTION CONTAIN WITHIN A DRIVEWAY APRON) SHALL BE CLASS "A" – 3,000 PSI.
5. MINIMUM REPLACEMENT FOR REPAIRS IS A 5' X 5' PANEL
6. 4" STONE BASE MAY BE REQUIRED FOR POOR SOIL CONDITIONS
7. MINIMUM DEPTH FOR TUNNELING BELOW SIDEWALK IS 12"
8. MAX ADJACENT GROUND SLOPE WITHOUT RAILING IS 2:1
9. MIN GRADE FOR PROPER DRAINAGE IS 1% IN AT LEAST 1 DIRECTION. MAX CROSS SLOPE IS 2%. MAX LONGITUDINAL SLOPE IS 8.3%, 10% IF LIMITED BY EXISTING CONDITIONS, OR NO GREATER THAN THE SLOPE OF THE EXISTING ADJACENT ROAD.

10 CITY OF WILMINGTON SIDEWALK
NOT TO SCALE

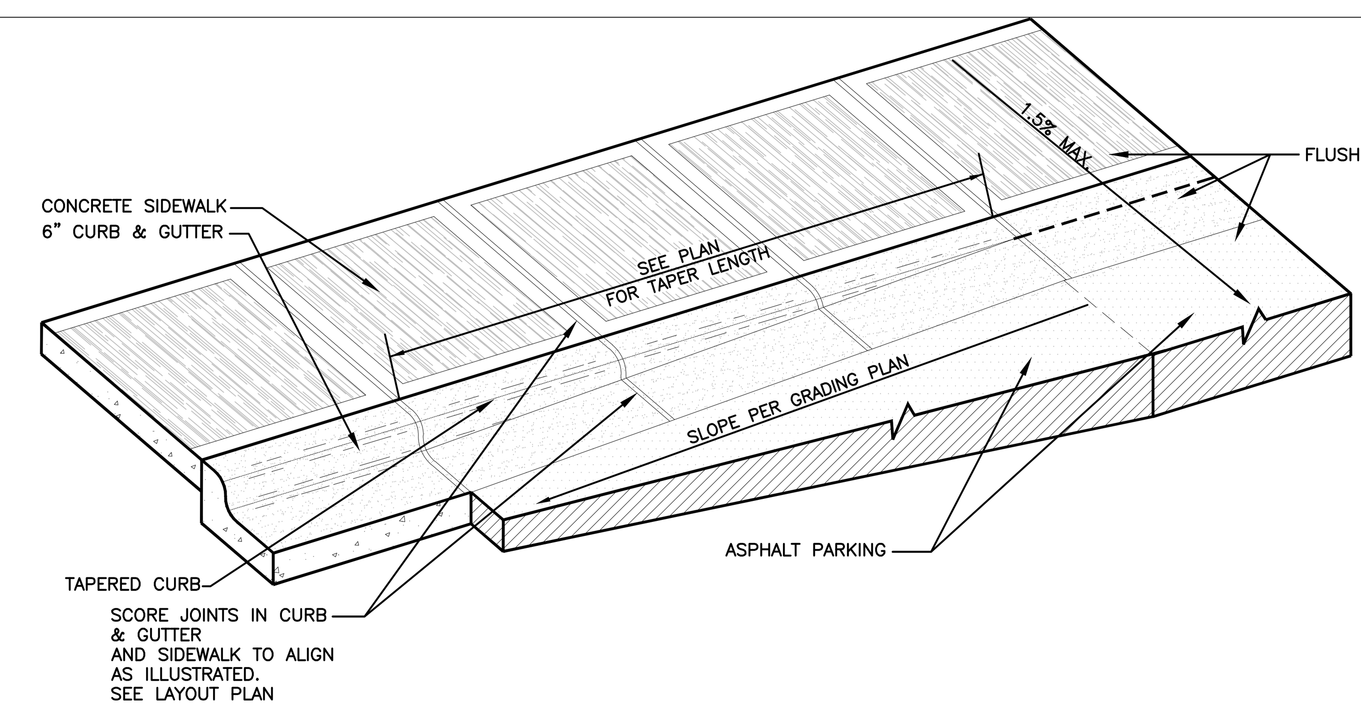

9 GUTTER TAPER
NOT TO SCALE

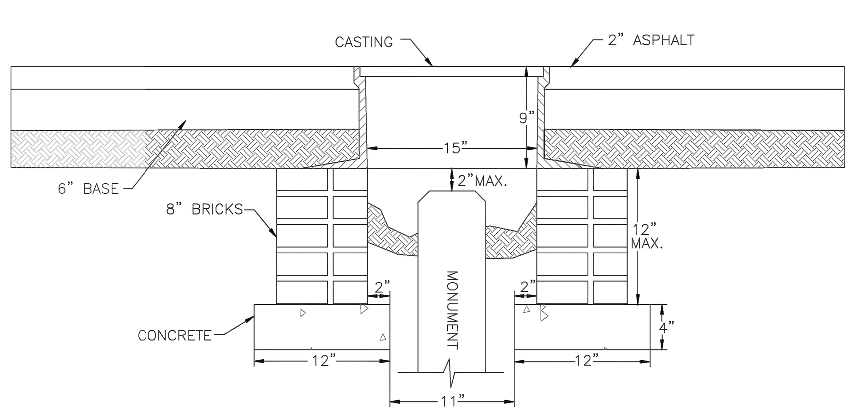

STANDARD DETAIL		
DATE: OCTOBER, 2012	MONUMENT BASE	CITY OF WILMINGTON NORTH CAROLINA
DRAWN BY JSR/CMR		CITY OF WILMINGTON ENGINEERING PO BOX 1810 WILMINGTON, NC 28402 (910) 341–7807
CHECKED BY B.P., P.E.		
SCALE NOT TO SCALE		SD 15–01

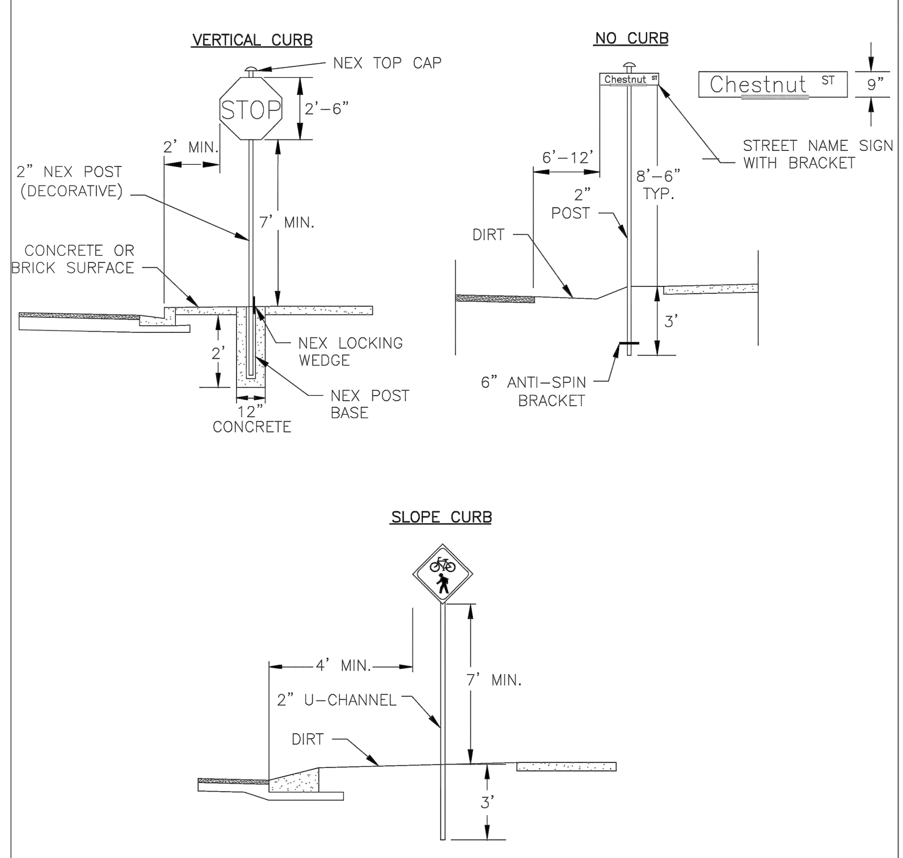

*DETAILS SHOW VARIOUS TYPES AND LOCATION, BUT NOT ALL COMBINATIONS.

STANDARD DETAIL		
DATE: NOVEMBER, 2011	STREET SIGNS AND LOCATION	CITY OF WILMINGTON NORTH CAROLINA
DRAWN BY JSR		CITY OF WILMINGTON ENGINEERING PO BOX 1810 WILMINGTON, NC 28402 (910) 341–7807
CHECKED BY BDR, P.E.		
SCALE NOT TO SCALE	SHEET 1 of 2	SD 15-03

SIGNS

1. All signs shall meet the requirements of MUTCD and City Traffic Engineering in effect at the time of construction.
2. All Traffic Control Signs including multi-use paths shall be fabricated with 0.080 inch aluminum blanks using high intensity prismatic reflective sheeting Type IV or better. STOP signs shall be a minimum of 30"x30".
3. SPECIAL DESIGNATION signs by location and type shall adhere to City of Wilmington signage plan (ie. downtown, historic, cross-city trail, parks, riverfront, scenic by-way, parking, etc.) and all associated policies.
4. POST MOUNTED STREET NAME SIGNS shall be fabricated with 9" extruded aluminum street name sign blanks using a standard cut-out. Minimum sign length is 18" long and increasing in 6" increments to 54" maximum as dictated by the number of letters in the name. The color scheme shall be white letters on a green background without a border. Generally, in the downtown and historic areas or as designated in the City of Wilmington signage plan the background shall be blue and contain a topper.
5. Decorative sign posts shall consist of the NEX sign support system, 2" octagonal tube, 14 gauge, powder coated glossy black and include cap, post, base and wedge.
6. All other sign posts shall be u-channel posts made of galvanized steel with 8' posts 2lbs/ft or 12' posts 3lbs/ft. Galvanized NEX post may be substituted with approval from the City Signs and Markings Engineer.
7. OVERHEAD STREET NAME SIGNS shall be fabricated with 0.080 inch aluminum flat sign blanks 18" in height using a standard cut-out. Sign length will be dictated by the number of letters in the name. For mast-arm type traffic signal supports and other overhead support systems refer to the design plans for maximum sign length.
8. All sign lettering, colors and fonts shall adhere to the MUTCD in effect at the time of construction. Florescent Yellow-Green shall be used on signs, in place of Yellow, when listed as an optional color in the MUTCD. Generally, the font will be FHWA series fonts (Highway Gothic.) Other font types require prior City Signs and Markings Engineer approval .

LOCATION

9. Sign locations depend on the edge of road condition. Generally, signs shall be a minimum 2' from face of a vertical curb, 4' from front of slope face curb, and 6' from edge of pavement without curb. Signs shall not be located more than 12' from any of these locations.
10. Sign posts installed in dirt shall be buried a minimum of 36". Octagonal posts shall utilize an anti-spin device, 6" in length minimum. Sign posts installed in concrete or brick shall utilize a base cast in concrete 24" x 12" diameter.
11. Street name signs shall be installed 8'-6" from the ground to the bottom of the sign. Street name signs co-located with STOP signs shall be installed above the STOP sign. A 6" space shall be maintained between the STOP sign and a Street name sign that is parallel to the STOP sign face. All other signs should be mounted per MUTCD guidelines for Urban Areas.

STANDARD DETAIL		
DATE: NOVEMBER, 2011	STREET SIGNS AND LOCATION	CITY OF WILMINGTON NORTH CAROLINA
DRAWN BY JSR		CITY OF WILMINGTON ENGINEERING PO BOX 1810 WILMINGTON, NC 28402 (910) 341–7807
CHECKED BY BDR, P.E.		
SCALE NOT TO SCALE	SHEET 2 of 2	SD 15-03

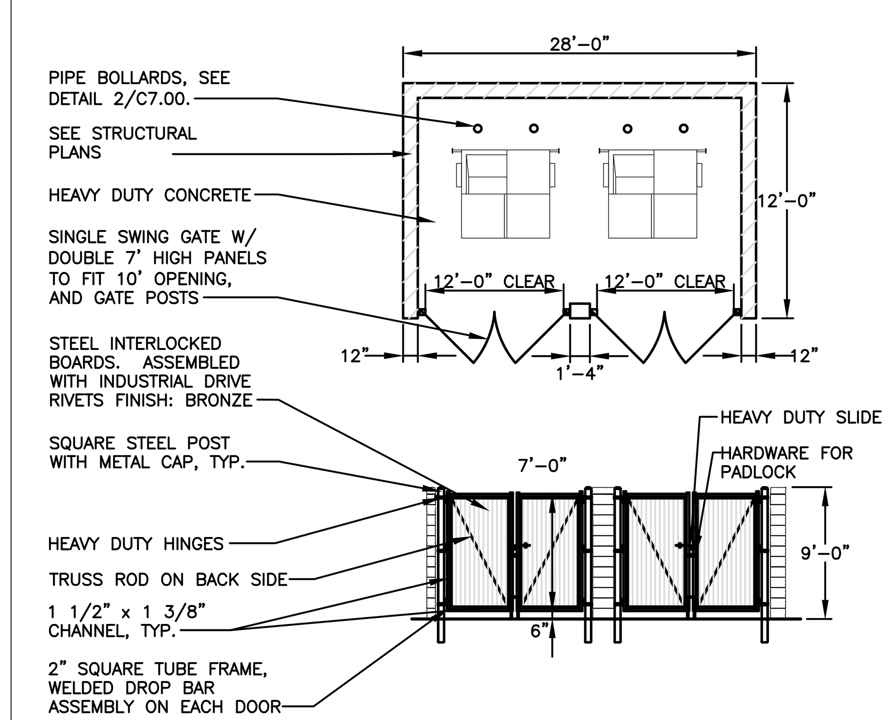

NOTE:

POST FOOTING DEPTH VARIES, SEE MANUFACTURERS RECOMMENDATIONS

5 DUMPSTER ENCLOSURE AND GATE
NOT TO SCALE

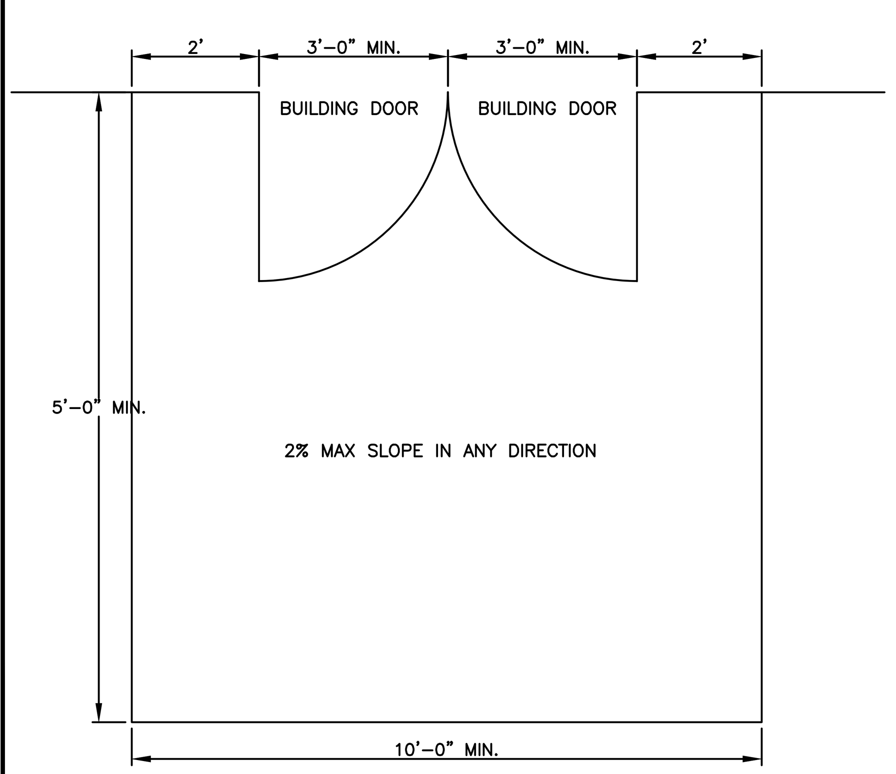

4 ACCESSIBLE EGRESS LANDING
NOT TO SCALE

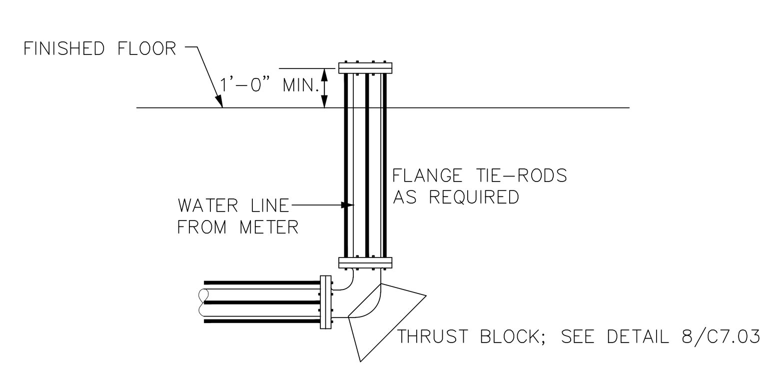

3 WATER LINE TO BUILDING
NOT TO SCALE

CONCRETE NOTES:

1. UNLESS NOTED OTHERWISE, ALL CONCRETE SHALL ATTAIN A MINIMUM COMPRESSIVE STRENGTH OF 3000 PSI AT 28 DAYS.
2. AGGREGATES SHALL BE NATURAL SAND AND ROCK CONFORMING TO ASTM C33.
3. CEMENT SHALL BE PORTLAND CEMENT CONFORMING TO ASTM C–150, TYPE I OR II, LOW ALKALI OR AS REQUIRED TO SATISFY SITE SOIL CONDITIONS AS DETERMINED BY THE PROJECT SOILS ENGINEER.
4. WATER SHALL BE POTABLE, CLEAN AND FREE FROM INJURIOUS AMOUNTS OF OIL, ACIDS, ALKALIS, SALTS, ORGANIC MATERIALS, OR OTHER SUBSTANCES THAT MAY BE DELETERIOUS TO CONCRETE OR REINFORCEMENT.
5. ADMIXTURES TO BE USED IN CONCRETE SHALL BE SUBJECT TO PRIOR APPROVAL BY THE ENGINEER.
6. MAXIMUM PERMISSIBLE WATER–CEMENT RATIOS FOR CONCRETE WHEN STRENGTH DATA FROM TRIAL BATCHES ARE NOT AVAILABLE SHALL CONFORM TO TABLE 4.5 OF ACI STANDARD 318–77 OR BASED ON SULFATE CONTENT OF THE SITE SOILS, AS DETERMINED BY THE SOILS ENGINEER. THE LOWER WATER–CEMENT RATIO SHALL GOVERN.
7. CONCRETE SHALL BE CURED WHILE IN A MOIST CONDITION FOR AT LEAST THE FIRST 7 DAYS AFTER PLACEMENT. METHODS FOR ACCELERATED CURING SHALL HAVE PRIOR APPROVAL OF THE ENGINEER.
8. THE FOLLOWING MINIMUM CLEAR DISTANCES BETWEEN REINFORCING STEEL AND FACE OF CONCRETE SHALL BE MAINTAINED UNLESS NOTED OTHERWISE:
   SLABS ON GRADE..CENTER OF SLAB
   CONCRETE BELOW GRADE, FORMED...2"
   CONCRETE BELOW GRADE, UNFORMED
   (POURED AGAINST EARTH)..3"
   CONCRETE EXPOSED TO WEATHER...1–1/2"

2 CONCRETE NOTES
NOT TO SCALE

NOTES:
1. PROVIDE BUILDING I.D. ON REMOTE FIRE DEPT. CONNECTION.
2. NO TREES, BUSHES, OR WALLS WITHIN 5' RADIUS OF FIRE DEPT. CONNECTION.
3. 4' MIN. TO BACK OF CURB, OR 2' MIN. TO BACK OF SIDEWALK, OR WHEN NO CURB, 4' MAX. OUTSIDE THE CLEAR ZONE.
4. PROVIDE TWO 2–½" CONNECTIONS

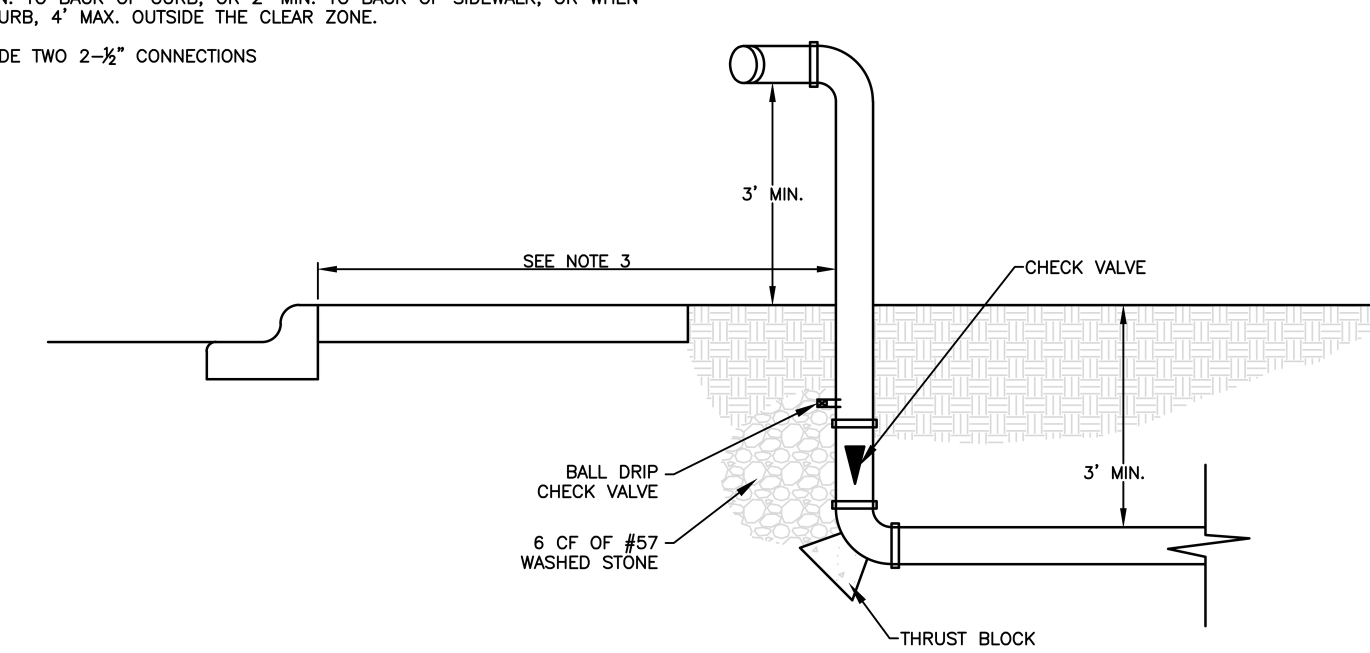

1 FIRE DEPARTMENT CONNECTION
NOT TO SCALE

LITTLE
DIVERSIFIED ARCHITECTURAL CONSULTING
5815 Westpark Drive Charlotte, NC 28217
T: 704.525.6350 F: 704.561.8700
www.littleonline.com

This drawing and the design shown are the property of Little Diversified Architectural Consulting. The reproduction, copying or other use of this drawing without their written consent is prohibited and any infringement will be subject to legal action.

© Little 2015

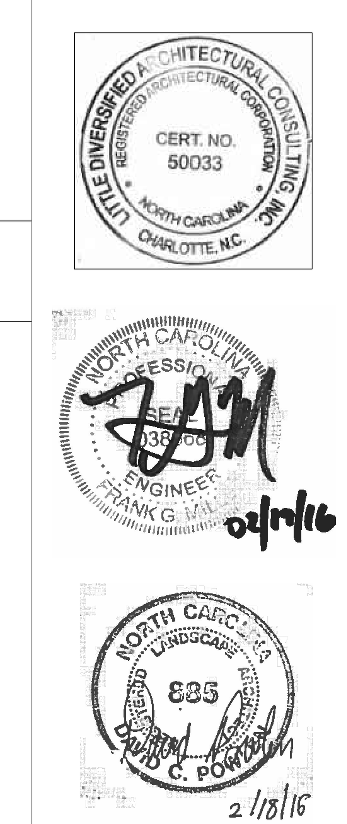

ISSUE FOR
NOT FOR CONSTRUCTION
TRC REVIEW

ISSUE DATE
02/18/2016

REVISIONS

NO.	REASON	DATE

PROJECT TEAM
PRINCIPAL IN CHARGE
DAVID POWLEN, RLA, LEED AP
PROJECT MANAGER
DAVID POWLEN, RLA, LEED AP
DESIGN TEAM
FGM

PROJECT NAME
LiDL GROCERY
EASTWOOD ROAD

1451 EASTWOOD RD
WILMINGTON, NC

PROJECT NUMBER
124.4360.00

SHEET TITLE
SITE DETAILS

SHEET NUMBER
C7.01

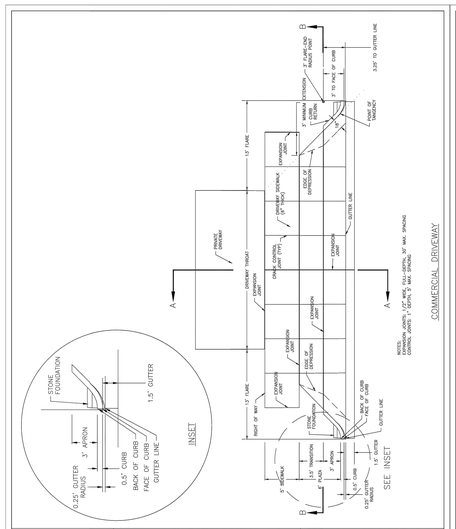

DATE: JUNE 1, 2015	STANDARD DETAIL
DRAWN BY JSR	COMMERCIAL DRIVEWAY PLAN
CHECKED BY D.E.C., P.E.	
SCALE NOT TO SCALE	1 of 2

CITY OF WILMINGTON NORTH CAROLINA
CITY OF WILMINGTON ENGINEERING
PO BOX 1810
WILMINGTON N.C. 28402
(910) 341-7807
SD 3-03.3

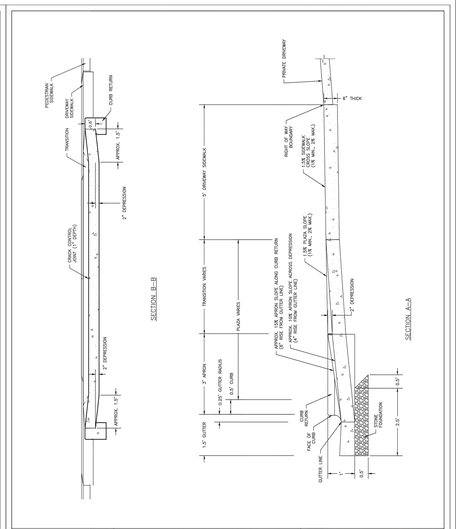

DATE: JUNE 1, 2015	STANDARD DETAIL
DRAWN BY JSR	COMMERCIAL DRIVEWAY SECTIONS
CHECKED BY D.E.C., P.E.	
SCALE NOT TO SCALE	2 of 2

CITY OF WILMINGTON NORTH CAROLINA
CITY OF WILMINGTON ENGINEERING
PO BOX 1810
WILMINGTON, NC 28402
(910) 341-7807
SD 3-03.4

8 COMMERCIAL DRIVEWAY PLAN & SECTION
NOT TO SCALE

NOTE:
TREE PROTECTION FENCING SHALL BE INSTALLED ALONG ALL PROTECTED TREES WITH SIGNAGE OF NO MATERIAL STORAGE IN ENGLISH AND SPANISH.

PRIOR TO ANY CLEARING, GRADING OR CONSTRUCTION ACTIVITY, TREE PROTECTION FENCING WILL BE INSTALLED AROUND PROTECTED TREES OR GROVES OF TREES. NO CONSTRUCTION WORKERS, TOOLS, MATERIALS, OR VEHICLES ARE PERMITTED WITHIN THE TREE PROTECTION FENCING.

NOTE:
THE CRITICAL ROOT ZONE (CRZ) OF A TREE IS WHERE THE MAJORITY OF A TREE'S ROOTS LAY. 85% OF MOST TREE ROOTS ARE FOUND IN THE TOP 24" OF THE SOIL AND SUPPLY THE MAJORITY OF NUTRIENTS AND WATER. GENERALLY, ROOTS SPREAD OUT 2–3X THE HEIGHT OF THE TREE.

NOTE:
CROWN OF THE TREE IS NEEDED FOR LEAF GROWTH TO PRODUCE OXYGEN, FILTER THE AIR, REDUCE WIND AND SOFTEN NOISE. DO NOT DISFIGURE CROWN WITH INTENSIVE PRUNING.

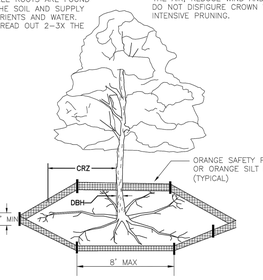

NOTES:
1. PROTECT CRITICAL ROOT ZONE (CRZ) OF TREES PRIOR TO CONSTRUCTION. CLEARLY MARK THE TREES AND ERECT A PROTECTIVE BARRIER AT THE CRZ. BARRIER SHALL BE MAINTAINED UNTIL CONSTRUCTION IS COMPLETE.
2. CRZ RADIUS IS 1 FT PER INCH OF TREE DIAMETER AT BREAST HEIGHT (DBH).
3. IF CONSTRUCTION OCCURS WITHIN THE CRZ, AT LEAST 12" OF MULCH AND/OR LOGGING MATTS SHALL BE PLACED WHERE MACHINERY MANEUVERS TO REDUCE SOIL COMPACTION IN THIS ZONE.
4. WHERE SIDEWALKS AND PATHWAYS PASS WITHIN CRZ, EXTRA CARE SHALL BE TAKEN TO AVOID DAMAGE TO THE ROOTS. ALTERNATE CONSTRUCTION METHODS, SUCH AS A REINFORCED SIDEWALK, SHALL BE IMPLEMENTED AS NECESSARY.
5. FOR ALL TREES, CUTTING OF LARGE STRUCTURAL ROOTS LOCATED NEAR THE BASE OF THE TRUNK IS PROHIBITED. DO NOT COMPACT SOIL BENEATH TREES. NO VEHICLE SHALL BE ALLOWED TO PARK UNDER TREES. NO MATERIALS OR EQUIPMENT SHALL BE STORED BENEATH TREES. DAMAGING THE BARK WITH LAWNMOWERS, CONSTRUCTION EQUIPMENT, OR ANYTHING ELSE IS PROHIBITED. CONTRACTOR SHALL REPAIR DAMAGE TO TREES.
6. FAILING TO INSTALL OR MAINTAIN PROTECTION MEASURES SHALL RESULT IN A STOP WORK ORDER AND FINE OF $500/DAY. DISTURBANCE OTHER THAN THAT ALLOWED ON THE APPROVED PLAN WILL REQUIRE OWNER TO POST A LETTER OF CREDIT FOR 3 YRS FOR TREE MITIGATION.

DATE: JAN, 2015	STANDARD DETAIL
DRAWN BY JSR	TREE PROTECTION DURING CONSTRUCTION
CHECKED BY RDG, P.E.	SHEET 1 of 2
SCALE NOT TO SCALE	

CITY OF WILMINGTON NORTH CAROLINA
CITY OF WILMINGTON ENGINEERING
PO BOX 1810
WILMINGTON, NC 28402
(910) 341-7807
SD 15-09

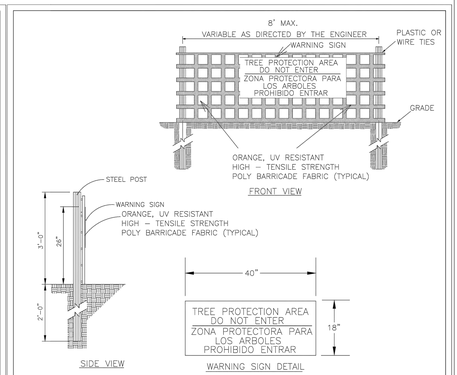

NOTES:
1. THE TREE PROTECTION FENCING SHALL NOT BE VIOLATED FOR THE ENTIRE DURATION OF THE PROJECT WITHOUT APPROVAL FROM URBAN FORESTRY STAFF.
2. WARNING SIGNS TO BE MADE OF DURABLE, WEATHERPROOF MATERIAL. LETTERS TO BE 3" HIGH, MINIMUM, CLEARLY LEGIBLE AND SPACED AS DETAILED.
3. SIGNS SHALL BE PLACED AT 50' MAXIMUM INTERVALS. PLACE A SIGN AT EACH END OF LINEAR TREE PROTECTION AND 50' ON CENTER THEREAFTER. FOR TREE PROTECTION AREAS LESS THAN 100' IN PERIMETER, PROVIDE NO LESS THAN TWO SIGNS PER PROTECTION AREA.
4. ATTACH SIGNS SECURELY TO FENCE POSTS AND FABRIC. MAINTAIN TREE PROTECTION FENCE AND SIGNS THROUGHOUT DURATION OF PROJECT.
5. TREE PROTECTION FENCING AND SIGNAGE SHALL BE REMOVED AFTER CONSTRUCTION.
6. ADDITIONAL SIGNS MAY BE REQUIRED BY CITY OF WILMINGTON, BASED ON ACTUAL FIELD CONDITIONS.

DATE: JAN, 2015	STANDARD DETAIL
DRAWN BY JSR	TREE PROTECTION DURING CONSTRUCTION
CHECKED BY RDG, P.E.	SHEET 2 of 2
SCALE NOT TO SCALE	

CITY OF WILMINGTON NORTH CAROLINA
CITY OF WILMINGTON ENGINEERING
PO BOX 1810
WILMINGTON, NC 28402
(910) 341-7807
SD 15-09

7 TREE PROTECTION DURING CONSTRUCTION
NOT TO SCALE

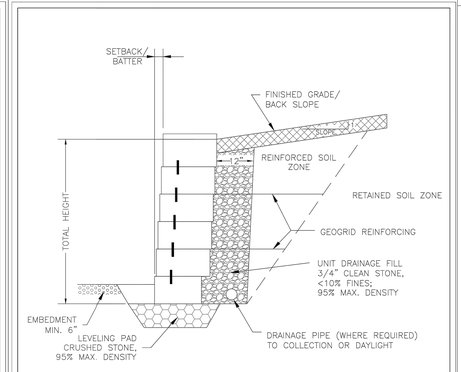

1. ALL RETAINING WALL DESIGNS (GRAVITY AND REINFORCED) ARE SUBJECT TO REVIEW AND APPROVAL BY CITY ENGINEER.
2. RETAINING WALLS GREATER THAN 4' SHALL BE DESIGNED BY A PROFESSIONAL ENGINEER.

DATE: OCTOBER, 2012	STANDARD DETAIL
DRAWN BY JSR	TYPICAL RETAINING WALL ≤ 4'
CHECKED BY B.D.R., P.E.	
SCALE NOT TO SCALE	

CITY OF WILMINGTON NORTH CAROLINA
CITY OF WILMINGTON ENGINEERING
PO BOX 1810
WILMINGTON, NC 28402
(910) 341-7807
SD 3-105

6 TYPICAL RETAINING WALL
NOT TO SCALE

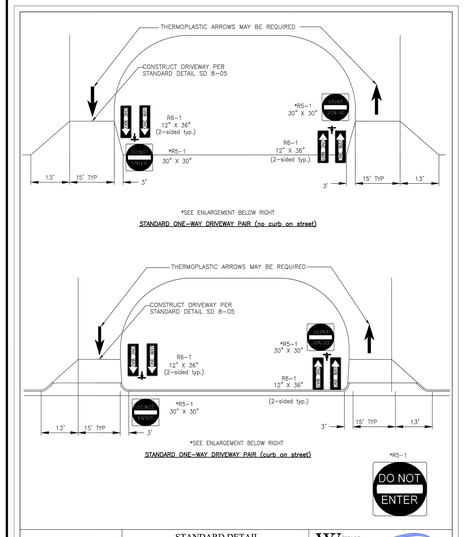

DATE: 2003	STANDARD DETAIL
DRAWN BY RLB	STANDARD ONE-WAY DRIVEWAY
CHECKED BY JRF	
SCALE NOT TO SCALE	

CITY OF WILMINGTON NORTH CAROLINA
CITY OF WILMINGTON ENGINEERING
PO BOX 1810
WILMINGTON, NC 28402
(910) 341-7807
SD 8-21

5 STANDARD ONE–WAY DRIVEWAY
NOT TO SCALE

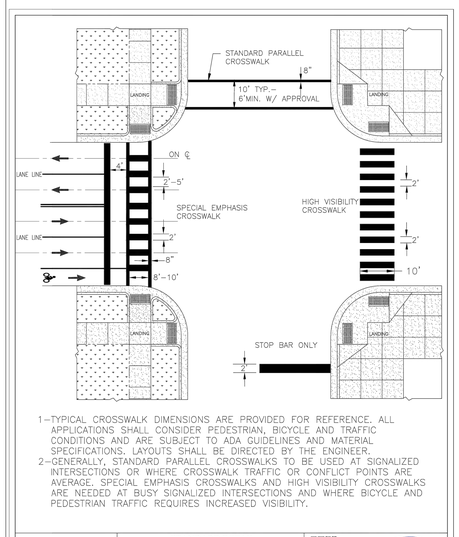

1–TYPICAL CROSSWALK DIMENSIONS ARE PROVIDED FOR REFERENCE. ALL APPLICATIONS SHALL CONSIDER PEDESTRIAN, BICYCLE AND TRAFFIC CONDITIONS AND ARE SUBJECT TO ADA GUIDELINES AND MATERIAL SPECIFICATIONS. LAYOUTS SHALL BE DIRECTED BY THE ENGINEER.
2–GENERALLY, STANDARD PARALLEL CROSSWALKS TO BE USED AT SIGNALIZED INTERSECTIONS OR WHERE CROSSWALK TRAFFIC OR CONFLICT POINTS ARE AVERAGE. SPECIAL EMPHASIS CROSSWALKS AND HIGH VISIBILITY CROSSWALKS ARE NEEDED AT BUSY SIGNALIZED INTERSECTIONS AND WHERE BICYCLE AND PEDESTRIAN TRAFFIC REQUIRES INCREASED VISIBILITY.

DATE: FEBRUARY, 2012	STANDARD DETAIL
DRAWN BY JSR	CROSSWALK PAVEMENT MARKINGS
CHECKED BY BDR, P.E.	
SCALE NOT TO SCALE	

CITY OF WILMINGTON NORTH CAROLINA
CITY OF WILMINGTON ENGINEERING
PO BOX 1810
WILMINGTON, NC 28402
(910) 341-7807
SD 11-11

4 CROSSWALK PAVEMENT MARKINGS
NOT TO SCALE

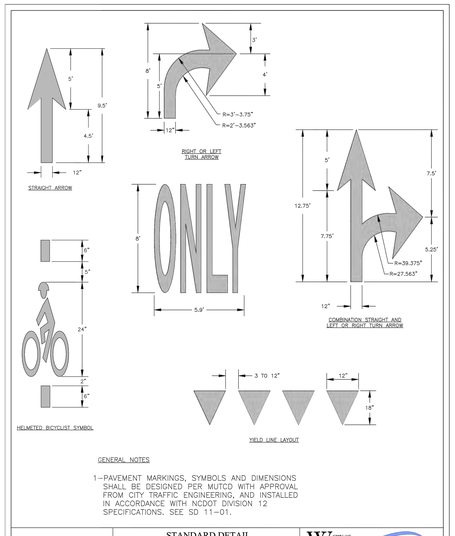

GENERAL NOTES

1–PAVEMENT MARKINGS, SYMBOLS AND DIMENSIONS SHALL BE DESIGNED PER MUTCD WITH APPROVAL FROM CITY TRAFFIC ENGINEERING, AND INSTALLED IN ACCORDANCE WITH NCDOT DIVISION 12 SPECIFICATIONS. SEE SD 11-01.

DATE: OCTOBER, 2012	STANDARD DETAIL
DRAWN BY JSR	GUIDELINES FOR PAVEMENT MARKINGS AND SYMBOLS
CHECKED BY BDR, P.E.	
SCALE NOT TO SCALE	

CITY OF WILMINGTON NORTH CAROLINA
CITY OF WILMINGTON ENGINEERING
PO BOX 1810
WILMINGTON, NC 28402
(910) 341-7807
SD 11-03

3 PAVEMENT MARKINGS & SYM. GUIDELINES
NOT TO SCALE

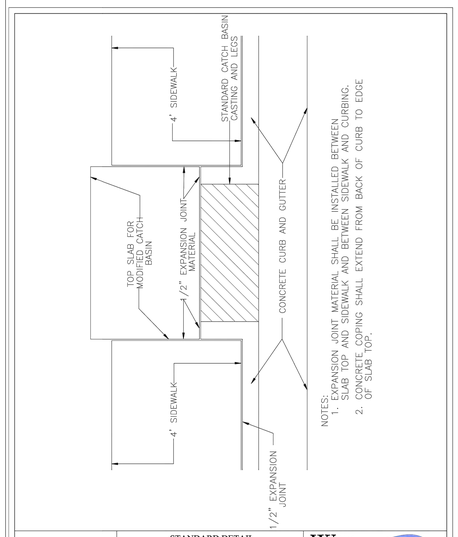

NOTES:
1. EXPANSION JOINT MATERIAL SHALL BE INSTALLED BETWEEN SLAB TOP AND SIDEWALK AND BETWEEN SIDEWALK AND CURBING.
2. CONCRETE COPING SHALL EXTEND FROM BACK OF CURB TO EDGE OF SLAB TOP.

DATE: 2001	STANDARD DETAIL
DRAWN BY JSR/CMR	MODIFIED CATCH BASIN SIDEWALK AND CURBING
CHECKED BY B.P., P.E.	
SCALE NOT TO SCALE	

CITY OF WILMINGTON NORTH CAROLINA
CITY OF WILMINGTON ENGINEERING
PO BOX 1810
WILMINGTON, NC 28402
(910) 341-7807
SD 2-12

2 MOD. CATCH BASIN SIDEWALK & CURB
NOT TO SCALE

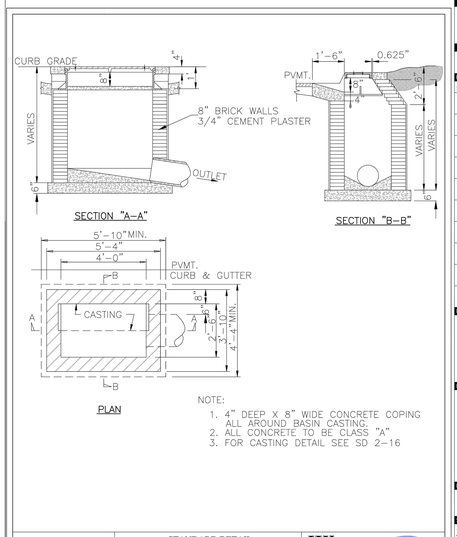

NOTE:
1. 4" DEEP X 8" WIDE CONCRETE COPING ALL AROUND BASIN CASTING.
2. ALL CONCRETE TO BE CLASS "A"
3. FOR CASTING DETAIL SEE SD 2-16

DATE: 2006	STANDARD DETAIL
DRAWN BY JSR/CMR	CATCH BASIN
CHECKED BY B.P., P.E.	
SCALE NOT TO SCALE	

CITY OF WILMINGTON NORTH CAROLINA
CITY OF WILMINGTON ENGINEERING
PO BOX 1810
WILMINGTON, NC 28402
(910) 341-7807
SD 2-01

1 CATCH BASIN
NOT TO SCALE

LITTLE
DIVERSIFIED ARCHITECTURAL CONSULTING
5815 Westpark Drive Charlotte, NC 28217
T: 704.525.6350 F: 704.561.8700
www.littleonline.com

This drawing and the design shown are the property of Little Diversified Architectural Consulting. The reproduction, copying or other use of this drawing without their written consent is prohibited and any infringement will be subject to legal action.
© Little 2015

LITTLE DIVERSIFIED ARCHITECTURAL CONSULTING, INC.
REGISTERED CORPORATION
CERT. NO. C-0833
NORTH CAROLINA
CHARLOTTE, NC

NORTH CAROLINA REGISTERED LANDSCAPE ARCHITECT SEAL 0325 ENGINEER FRANK G. MARTIN
02/18/16

NORTH CAROLINA LANDSCAPE ARCHITECT SEAL 635 DAVID C. POWLEN
2/18/16

ISSUE FOR
NOT FOR CONSTRUCTION
TRC REVIEW

ISSUE DATE
02/18/2016

REVISIONS

NO.	REASON	DATE

PROJECT TEAM
PRINCIPAL IN CHARGE
DAVID POWLEN, RLA, LEED AP
PROJECT MANAGER
DAVID POWLEN, RLA, LEED AP
DESIGN TEAM
FGM

PROJECT NAME
LiDL GROCERY
EASTWOOD ROAD

1451 EASTWOOD RD
WILMINGTON, NC

PROJECT NUMBER
124.4360.00

SHEET TITLE
SITE DETAILS

SHEET NUMBER
C7.02

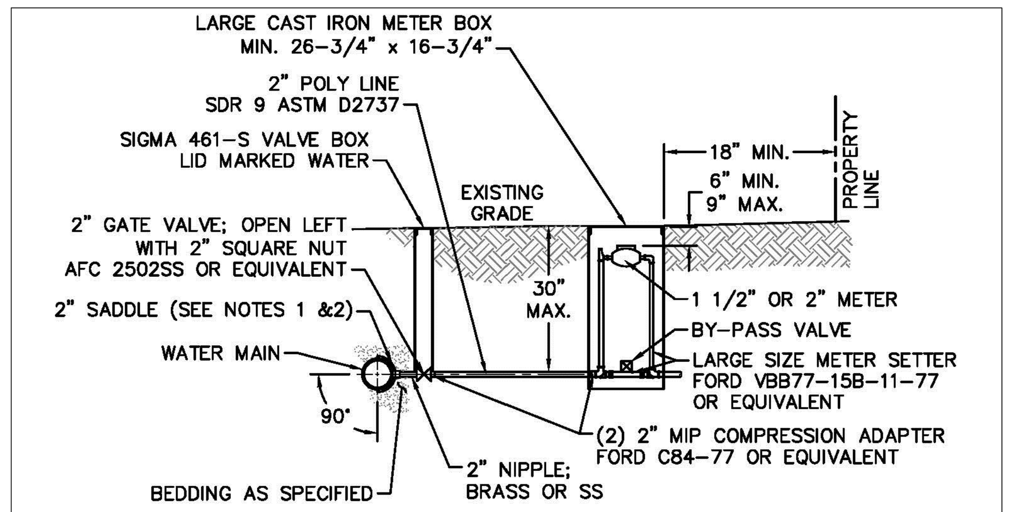

NOTES:
1. ALL SERVICES SHALL BE INSTALLED PERPENDICULAR TO MAIN.
2. SERVICE SADDLES ON PVC MAINS SHALL BE WIDE BAND BRASS BODY: McDONALD 3800, FORD S90 (DOUBLE STRAP) OR EQUIVALENT.
3. METER BOXES SUSCEPTIBLE TO TRAFFIC SHALL CONFORM TO ASTM A48, CLASS 30B AND AASHTO H20 LOAD RATING STANDARDS (OLDCASTLE PRECAST MODEL B1730 OR APPROVED EQUIVALENT).
4. METER BOXES SUSCEPTIBLE TO INCIDENTAL, NON–DELIBERATE TRAFFIC SHALL CONFORM TO ANSI/SCTE 77 TIER 15 LOAD RATING STANDARDS (SYNERTECH MODEL DUO 17x30 OR APPROVED EQUIVALENT).
5. NON–TRAFFIC METER BOXES SHALL BE SIGMA MB2203 OR APPROVED EQUIVALENT.
6. 3" CLEAN FILL REQUIRED ALL AROUND 2" POLY SERVICE LINE.

FOR 1–1/2" OR 2" WATER SERVICES

WD-11 LARGE METER
NOT TO SCALE

11 WATER METER
CAPE FEAR PUBLIC UTILITY AUTHORITY DETAIL WD–11

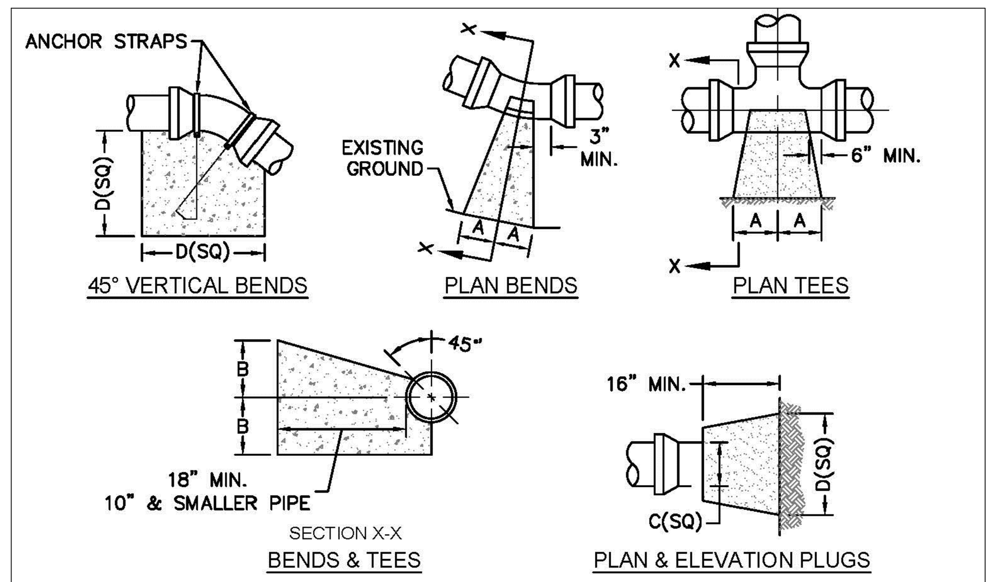

SIZE	90 BENDS A	90 BENDS B	45 BENDS A	45 BENDS B	22–1/2 BENDS A	22–1/2 BENDS B	TEES/PLUGS A	TEES/PLUGS B	45 VERT. BENDS
3"	8"	6"	5"	6"	3"	7"	6"	8"	27"
4"	8"	9"	5"	8"	3"	11"	6"	9"	28"
6"	14"	11"	9"	9"	8"	8"	12"	9"	36"
8"	16"	16"	12"	12"	10"	13"	14"	13"	42"
10"	18"	22"	15"	14"	14"	16"	18"	15"	50"
12"	20"	28"	18"	17"	16"	16"	22"	18"	62"
14"	26"	29"	21"	19"	18"	18"	26"	20"	72"
16"	33"	29"	25"	21"	20"	21"	32"	21"	83"
18"	40"	30"	28"	24"	22"	23"	36"	24"	88"

NOTES:
1. BASED ON 160 PSI TEST PRESSURE AND 2000 PSF SOIL BEARING CAPACITY.
2. ALL BEARING SURFACES TO BE CARRIED TO UNDISTURBED GROUND.
3. USE MEG–A–LUG (PREFERRED) IN LIEU OF BLOCKING AND RODDING.

WD-4 THRUST BLOCK DETAIL
NOT TO SCALE

8 THRUST BLOCK
CAPE FEAR PUBLIC UTILITY AUTHORITY DETAIL WD–4

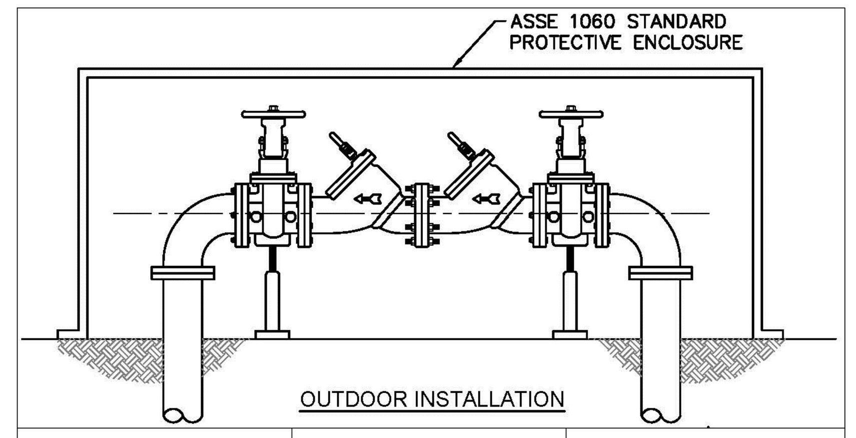

WD-7 DOUBLE CHECK VALVE ASSEMBLY
NOT TO SCALE

5 DOUBLE CHECK VALVE ASSEMBLY
CAPE FEAR PUBLIC UTILITY AUTHORITY DETAIL WD–7

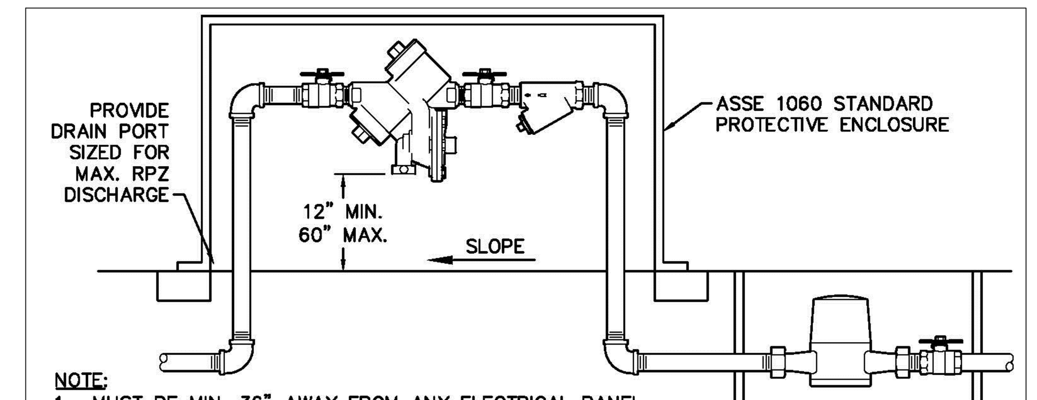

NOTE:
1. MUST BE MIN. 36" AWAY FROM ANY ELECTRICAL PANEL.
2. VALVE REQUIRED DOWNSTREAM OF BACKFLOW ASSEMBLY.
3. VERTICAL INSTALLATION SHALL BE DESIGNED AND SUBMITTED TO CFPUA ESMD FOR APPROVAL.

OUTDOOR HORIZONTAL INSTALLATION

WD-12 REDUCED PRESSURE PRINCIPLE ASSEMBLY
NOT TO SCALE

4 REDUCED PRESSURE PRINCIPLE ASSEMBLY
CAPE FEAR PUBLIC UTILITY AUTHORITY DETAIL WD–12

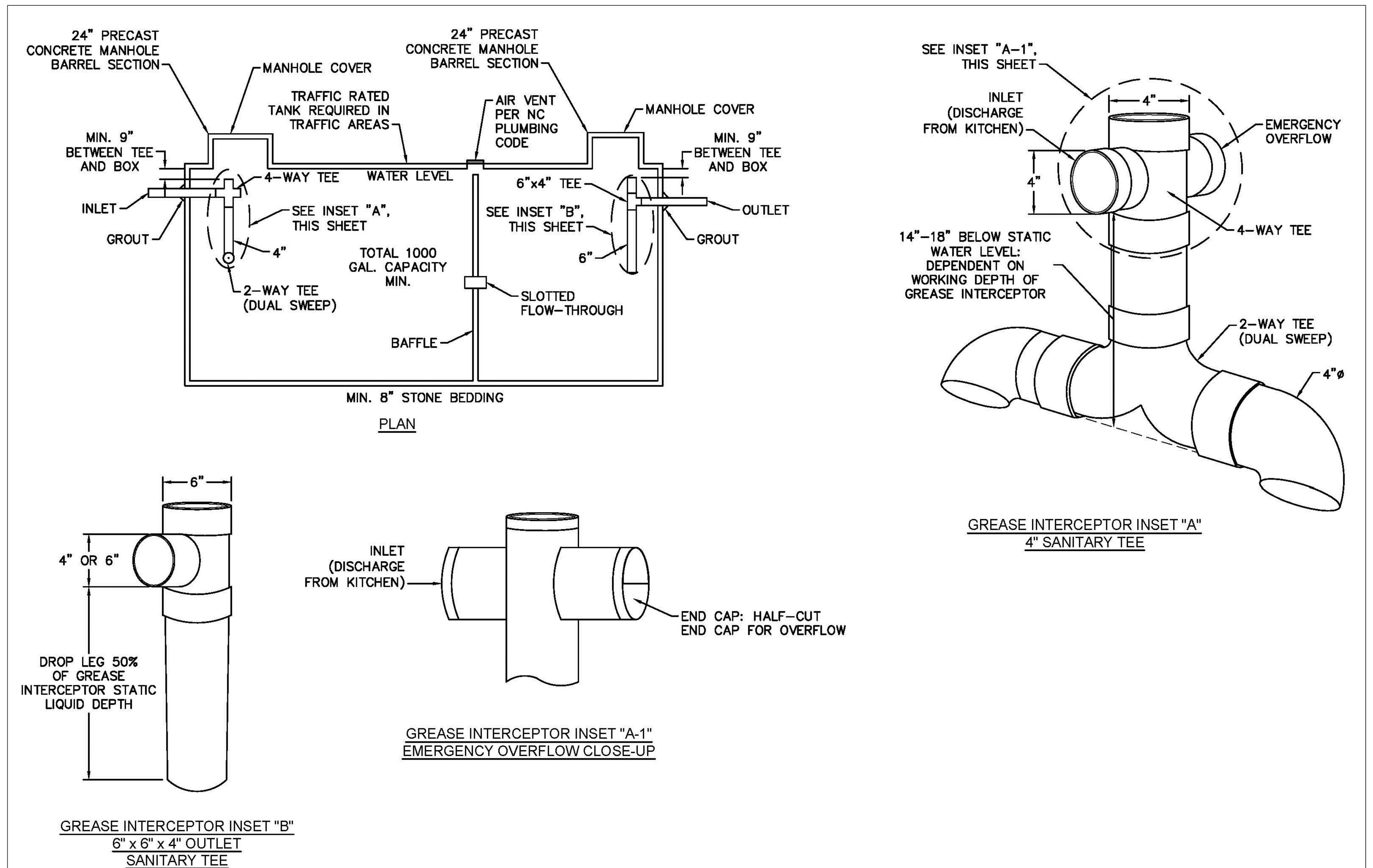

SD-23 CONCRETE GREASE INTERCEPTOR
NOT TO SCALE

3 GRASE INTERCEPTOR
CAPE FEAR PUBLIC UTILITY AUTHORITY DETAIL SD–23

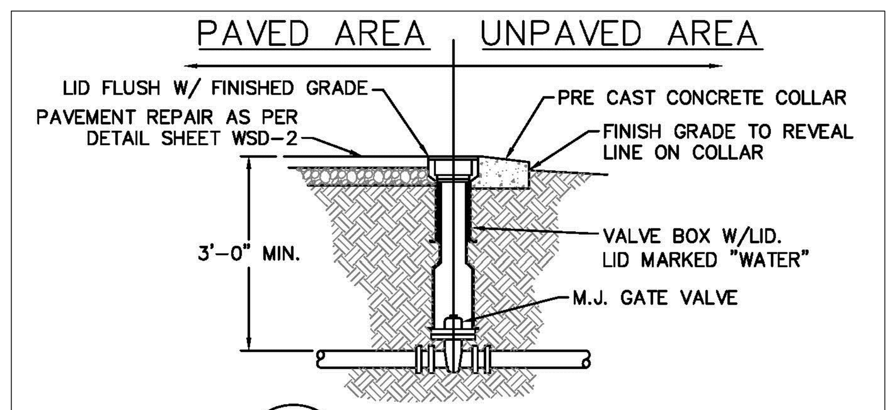

WD-3 VALVE DETAIL
NOT TO SCALE

10 VALVE
CAPE FEAR PUBLIC UTILITY AUTHORITY DETAIL WD–3

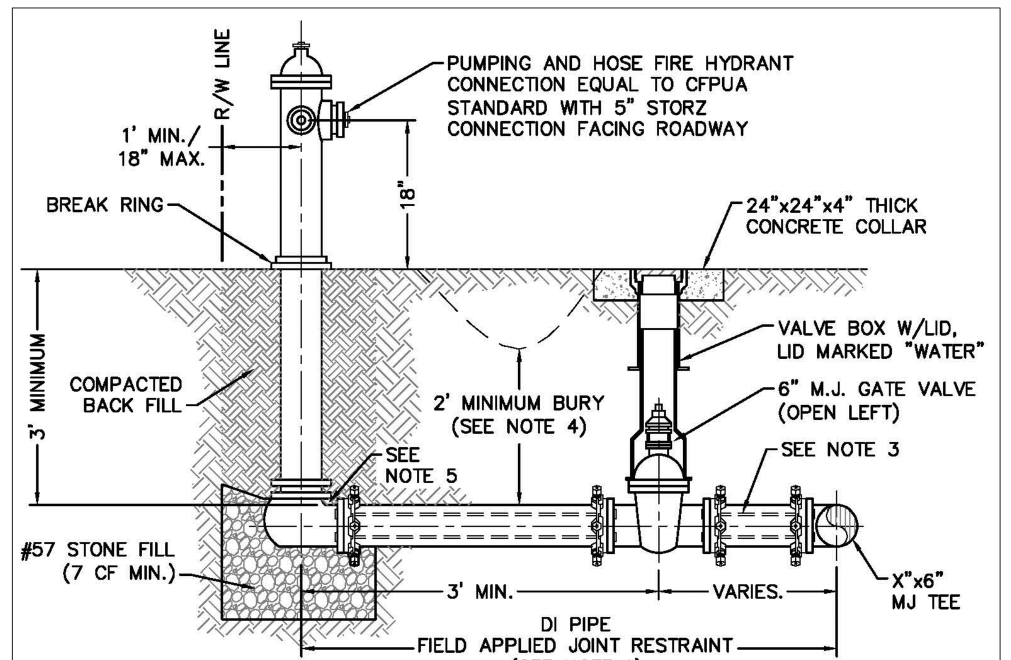

NOTES:
1. JOINT RESTRAINT SYSTEMS SHALL BE WEDGE ACTION STYLE FOR DI PIPE AS MANUFACTURED BY EBAA IRON, SIGMA, STAR PIPE PRODUCTS OR APPROVED EQUAL.
2. WHEN HYDRANT LEGS REQUIRE FULL LENGTH PIPE SECTIONS, OVER BELL RESTRAINT SYSTEM SHALL HAVE 316 STAINLESS STEEL HARNESS AND FASTENERS.
3. CONTINUOUS 316 STAINLESS STEEL RODS (TEE TO VALVE AND VALVE TO HYDRANT) MAY BE USED WITH COR–BLUE MJ T–BOLT AND GASKET KITS, AS AN ALTERNATIVE.
4. HYDRANT AND VALVE SHALL BE PLACED OUTSIDE DITCH LIMITS.
5. WEEP HOLES OPEN AND UNBLOCKED TO DRAIN.

WD-10 FIRE HYDRANT ASSEMBLY
NOT TO SCALE

7 FIRE HYDRANT
CAPE FEAR PUBLIC UTILITY AUTHORITY DETAIL WD–10

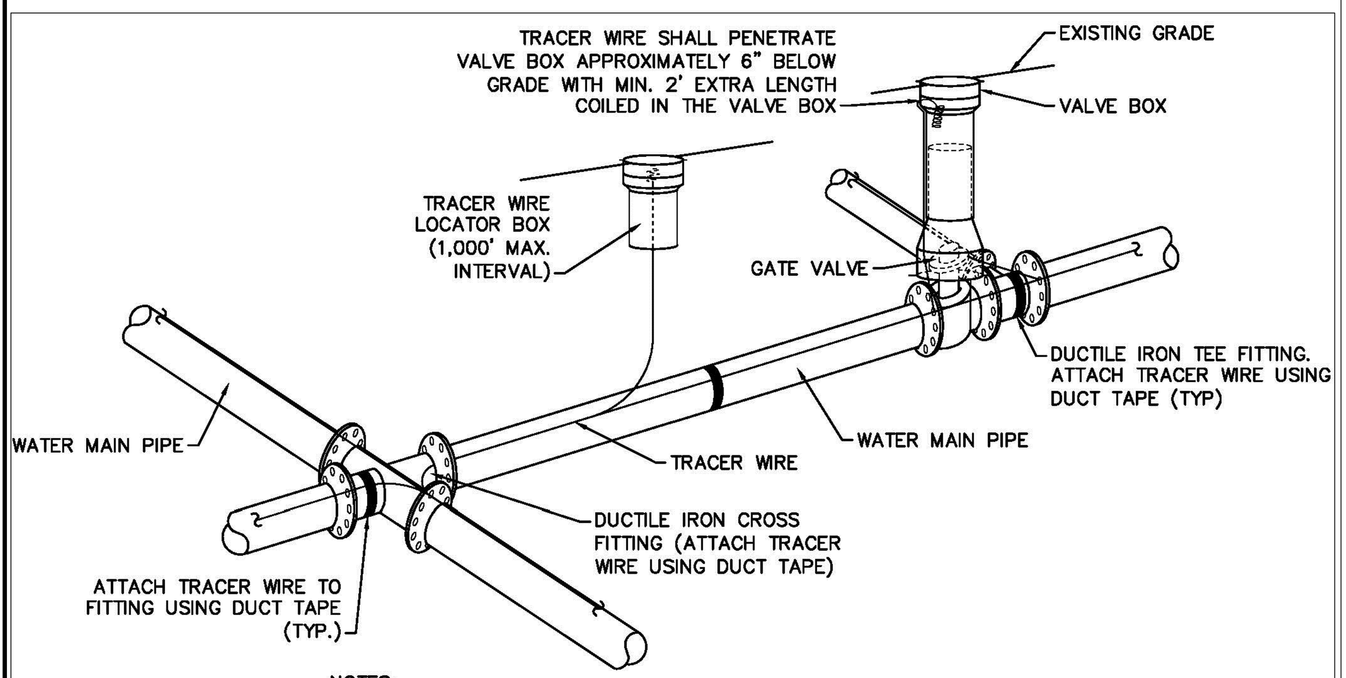

NOTES:
1. TRACER WIRE SHALL BE #10 COPPER SOLID CORE COPPER WIRE WITH GAS AND OIL RESISTANT INSULATION.
2. WIRE SHALL BE STRAPPED TO ALL PVC WATER MAIN PIPING WITH DUCT TAPE AT 12 FOOT INTERVALS ALONG THE PIPE.
3. SECURE WIRE TO ALL TEE AND CROSS FITTINGS WITH DUCT TAPE.
4. ALL SPLICES IN THE WIRE SHALL BE MADE WITH 3M DBR DIRECT BURY SPLICE KIT AN UNDERGROUND RATED, WATERTIGHT, AND APPROVED SPLICE CONNECTOR OR APPROVED EQUAL.

WD-17 TRACER WIRE DETAIL
NOT TO SCALE

9 TRACER WIRE
CAPE FEAR PUBLIC UTILITY AUTHORITY DETAIL WD–17

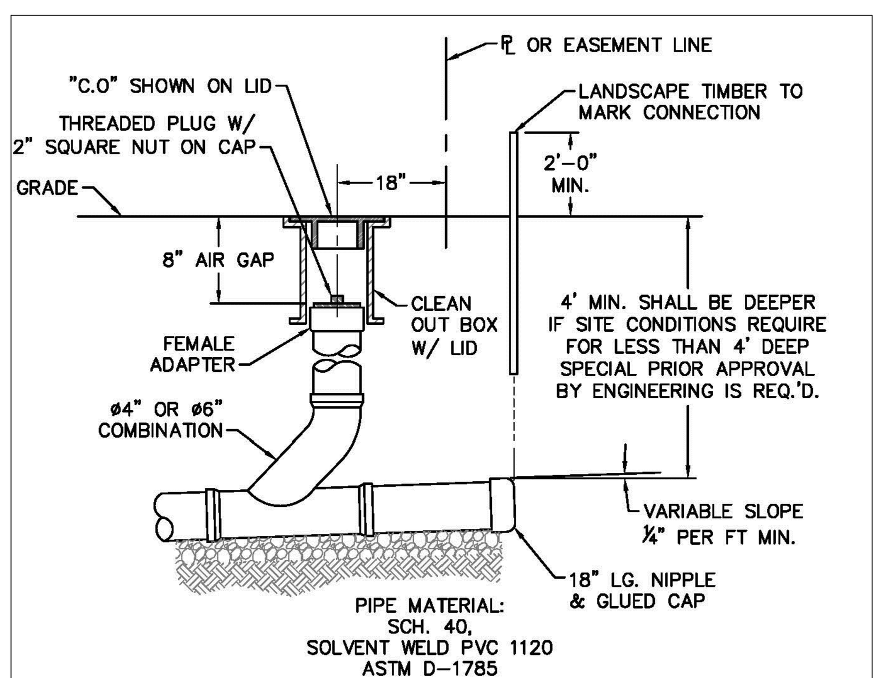

NOTE: FOR PRIVATE 8" SERVICES, MANHOLES ARE REQUIRED FOR TIE–IN TO MAIN

SD-11 SERVICE CONNECTION AND CLEAN-OUT
NOT TO SCALE

6 SANITARY SEWER CLEAN–OUT
CAPE FEAR PUBLIC UTILITY AUTHORITY DETAIL SD–11

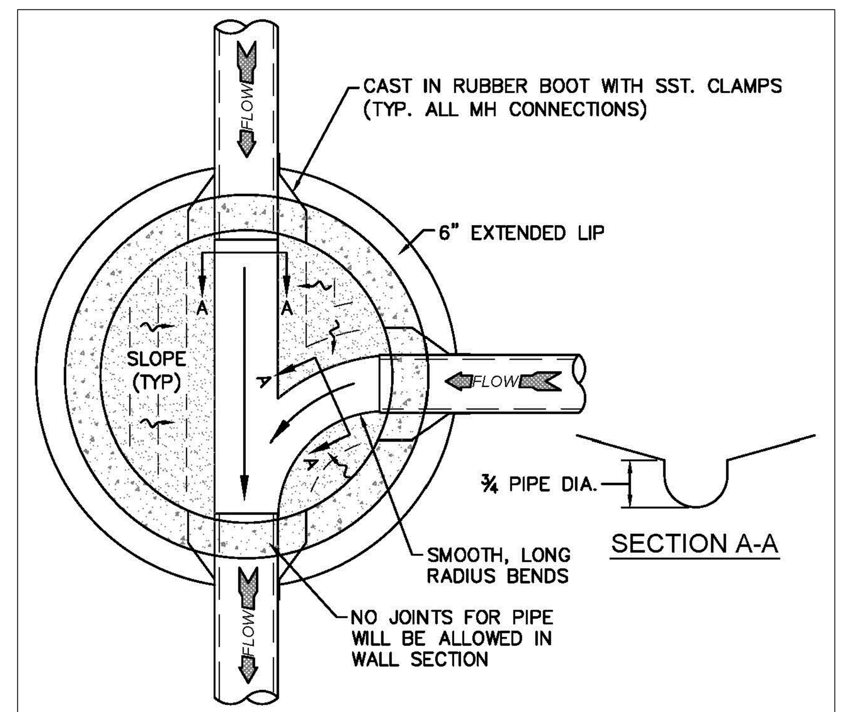

SD-5 MANHOLE FLOOR PLAN
NOT TO SCALE

2 SANITARY SEWER MANHOLE FLOOR PLAN
CAPE FEAR PUBLIC UTILITY AUTHORITY DETAIL SD–5

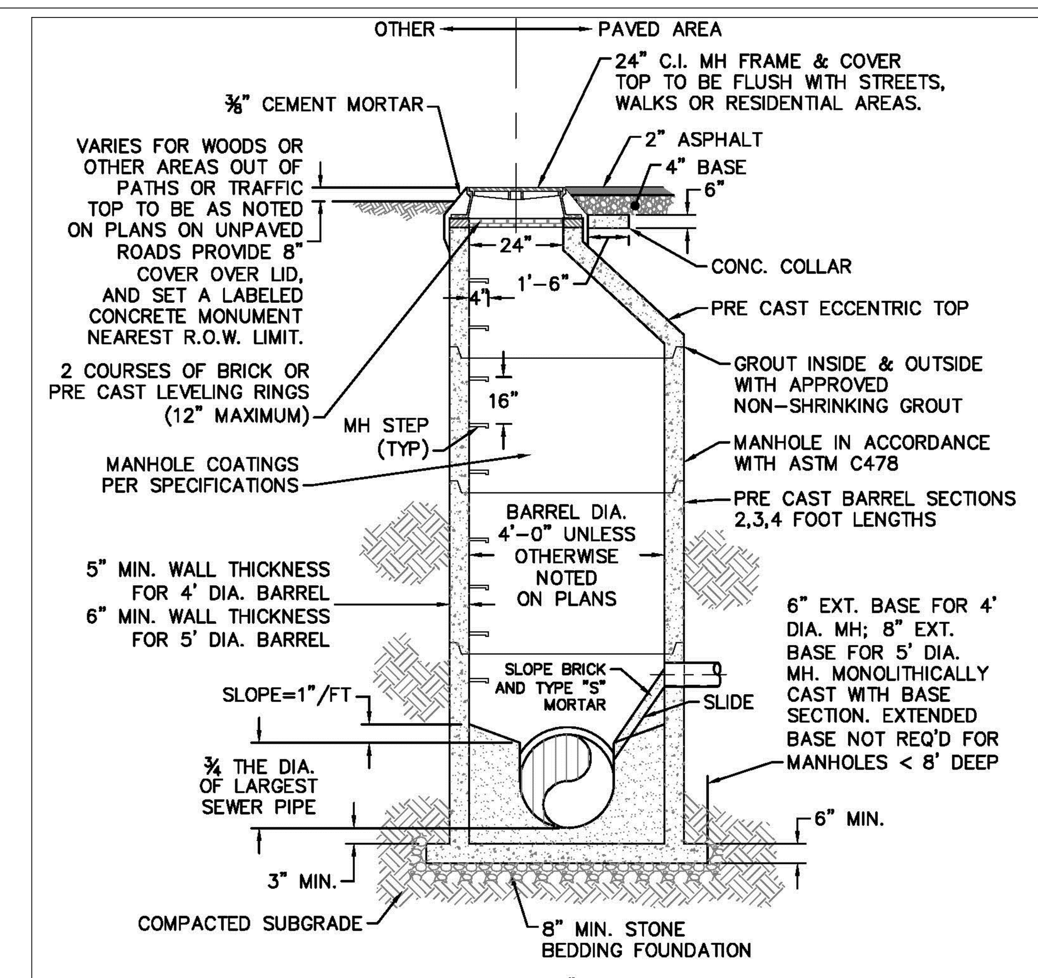

SD-1 PRECAST CONCRETE OFFSET MANHOLE TYPICAL
NOT TO SCALE

1 SANITARY SEWER MANHOLE
CAPE FEAR PUBLIC UTILITY AUTHORITY DETAIL SD–1

LITTLE
DIVERSIFIED ARCHITECTURAL CONSULTING
5815 Westpark Drive Charlotte, NC 28217
T: 704.525.6350 F: 704.561.8700
www.littleonline.com

This drawing and the design shown are the property of Little Diversified Architectural Consulting. The reproduction, copying or other use of this drawing without their written consent is prohibited and any infringement will be subject to legal action.
© Little 2015

LITTLE DIVERSIFIED ARCHITECTURAL CONSULTING, INC. REGISTERED ARCHITECTURAL CORPORATION CERT. NO. 50033 NORTH CAROLINA CHARLOTTE, N.C.

NORTH CAROLINA PROFESSIONAL ENGINEER SEAL 038... FRANK G. MI... 02/18/16

NORTH CAROLINA LANDSCAPE ARCHITECT 885 DAVID C. POWLEN 2/18/16

ISSUE FOR
NOT FOR CONSTRUCTION
TRC REVIEW

ISSUE DATE
02/18/2016

REVISIONS

NO.	REASON	DATE

PROJECT TEAM
PRINCIPAL IN CHARGE
DAVID POWLEN, RLA, LEED AP
PROJECT MANAGER
DAVID POWLEN, RLA, LEED AP
DESIGN TEAM
FGM

PROJECT NAME
LiDL GROCERY
EASTWOOD ROAD

1451 EASTWOOD RD
WILMINGTON, NC

PROJECT NUMBER
124.4360.00

SHEET TITLE
SITE DETAILS

SHEET NUMBER
C7.03

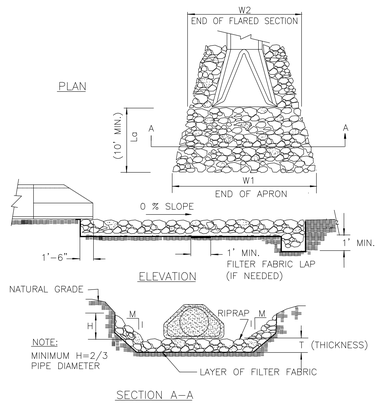

NOTES:

1. CLASS OR MEDIAN SIZE OF RIPRAP AND LENGTH, WIDTH AND DEPTH OF APRON TO BE DESIGNED BY THE ENGINEER.
2. RIPRAP SHOULD EXTEND UP BOTH SIDES OF THE APRON AND AROUND THE END OF THE PIPE OR CULVERT AT THE DISCHARGE OUTLET AT A MAXIMUM SLOPE OF 2:1 AND A HEIGHT NOT LESS THAN TWO THIRDS THE PIPE DIAMETER OR CULVERT HEIGHT.
3. THERE SHALL BE NO OVERFLOW FROM THE END OF THE APRON TO THE SURFACE OF THE RECEIVING CHANNEL. THE AREA TO BE PAVED OR RIPRAPPED SHALL BE UNDERCUT SO THAT THE INVERT OF THE APRON SHALL BE AT THE SAME GRADE (FLUSH) WITH THE SURFACE OF THE RECEIVING CHANNEL. THE APRON SHALL HAVE A CUTOFF OR TOE WALL AT THE DOWNSTREAM END.
4. THE WIDTH OF THE END OF THE APRON SHALL BE EQUAL TO THE BOTTOM WIDTH OF THE RECEIVING CHANNEL. MAXIMUM TAPER TO RECEIVING CHANNEL 5:1.
5. ALL SUBGRADE FOR STRUCTURE TO BE COMPACTED TO 95% OR GREATER.
6. THE PLACING OF FILL, EITHER LOOSE OR COMPACTED IN THE RECEIVING CHANNEL SHALL NOT BE ALLOWED.
7. NO BENDS OR CURVES IN THE HORIZONTAL ALIGNMENT OF THE APRON WILL BE PERMITTED.
8. FILTER FABRIC SHALL BE INSTALLED ON COMPACTED SUBGRADE PRIOR TO PLACEMENT OF RIP RAP.
9. ANY DISTURBED AREA FROM END OF APRON TO RECIEVING CHANNEL MUST BE STABILIZED.

USE USDA NOMOGRAPH FROM NC SEDIMENT AND EROSION CONTROL MANUAL FOR DESIGN DATA

OUTLET	La	W1	W2	d_{50}	*T	H
FES-1 (24")	12'	14'	6'	0.5'	15"	16"

* d50 (see fig 8.06 a&b "NC SEDIMENT AND EROSION CONTROL MANUAL")
dmax = 1.5 x d50

5 RIPRAP APRON
NOT TO SCALE

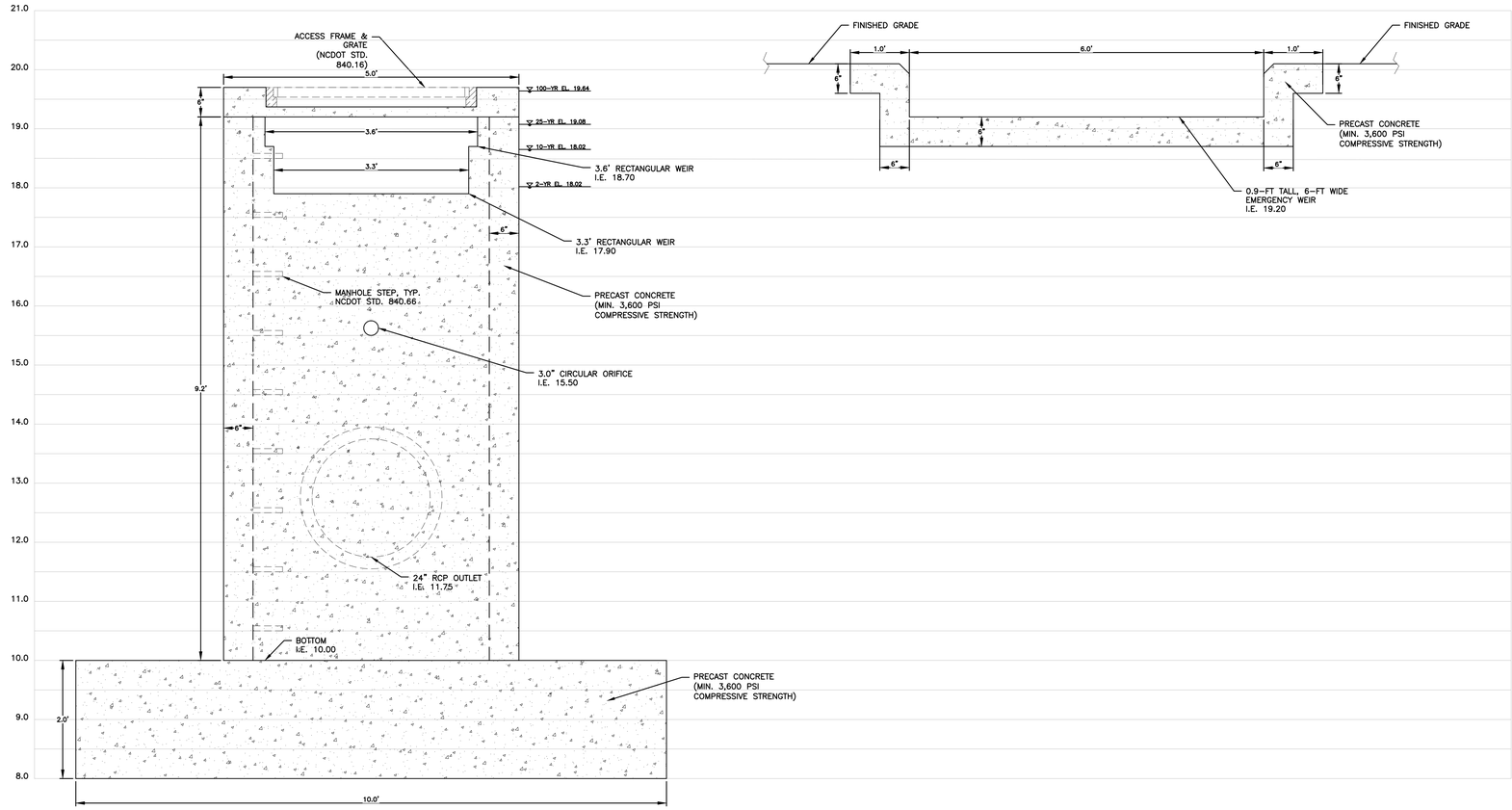

CONTROL STUCTURE#1 – SECTION VIEW

EMERGENCY SPILLWAY#1 – SECTION VIEW

2 OUTLET CONTROL STRUCTURE DETAILS
1"=1' H / 1"=1' V

NOTES:

1. POND SHALL MEET THE REQUIREMENTS SET FORTH BY THE NCDENR BMP MANUAL.
2. GEOMEMBRANE LINER SHALL BE INSTALLED IN STRICT ACCORDANCE WITH MANUFACTURER SPECIFICATIONS.

POND DATA

POND #	PERM. POOL EL.	TEMP. POOL EL.	2-YR. EL.	10-YR. EL.	25-YR. EL.	100-YR. EL.	TOP OF BANK EL.	MAIN BAY SED. BOT EL.	FOREBAY SED. BOT EL.	BOTTOM OF SHELF EL.	TOP OF SHELF EL.
1	15.50	17.77	18.02	18.65	19.08	19.64	20.10	10.00	11.00	15.00	16.00

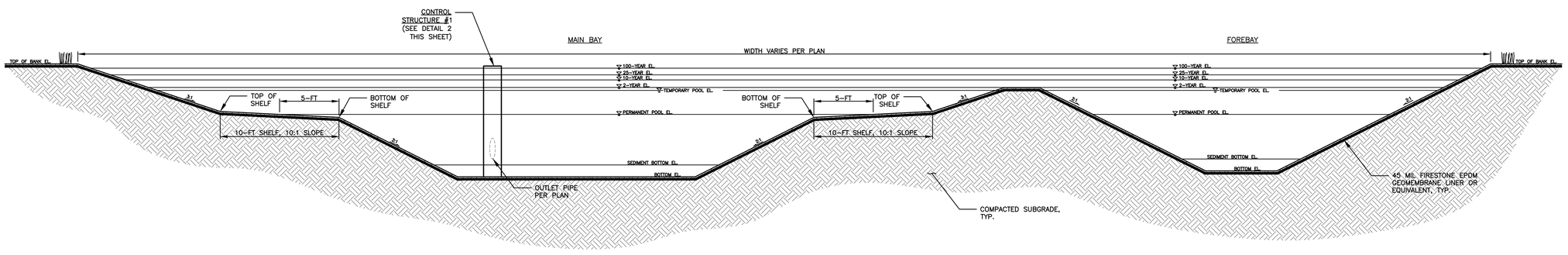

1 WET POND SECTION (POND-1)
NOT TO SCALE

LITTLE
DIVERSIFIED ARCHITECTURAL CONSULTING
5815 Westpark Drive Charlotte, NC 28217
T: 704.525.6350 F: 704.561.8700
www.littleonline.com

This drawing and the design shown are the property of Little Diversified Architectural Consulting. The reproduction, copying or other use of this drawing without their written consent is prohibited and any infringement will be subject to legal action.
© Little 2015

LITTLE DIVERSIFIED ARCHITECTURAL CONSULTING, INC. REGISTERED ARCHITECTURAL CORPORATION CERT. NO. 50033 NORTH CAROLINA CHARLOTTE, NC

NORTH CAROLINA PROFESSIONAL ENGINEER SEAL 036437 ENGINEER FRANK G. MILLER 02/18/16

NORTH CAROLINA REGISTERED LANDSCAPE ARCHITECT SEAL 885 DAVID C. POWLEN 2/18/16

ISSUE FOR
NOT FOR CONSTRUCTION
TRC REVIEW

ISSUE DATE
02/18/2016

REVISIONS

NO.	REASON	DATE

PROJECT TEAM
PRINCIPAL IN CHARGE
DAVID POWLEN, RLA, LEED AP
PROJECT MANAGER
DAVID POWLEN, RLA, LEED AP
DESIGN TEAM
FGM

PROJECT NAME
LIDL GROCERY
EASTWOOD ROAD

1451 EASTWOOD RD
WILMINGTON, NC

PROJECT NUMBER
124.4360.00

SHEET TITLE
SITE DETAILS

SHEET NUMBER
C7.03

PLANTING CALCULATIONS:

STREET TREE CALCULATIONS:

EASTWOOD DRIVE – 384 FEET STREET FRONTAGE
384x18/600 = 12

- CANOPY TREES REQUIRED = 12
- CANOPY TRESS PROVIDED = 12

CAVILER DRIVE – XXX FEET STREET FRONTAGE
XXXx18/600 = XX/2 = XX

- CANOPY TREES REQUIRED = XX
- CANOPY TRESS PROVIDED = XX

**STREET YARDS SHALL BE REQUIRED ALONG ALL STREET FRONTAGES. FOR SITES WITH TWO OR MORE STREET FRONTAGES, ONLY THE PRIMARY STREET FRONTAGE MUST CONTAIN THE FULL AMOUNT OF STREET YARD INDICATED PER THE CITY OF WILMINGTON LAND DEVELOPMENT CODE. ALL SECONDARY STREET FRONTAGES SHALL CONTAIN ONE–HALF OF THE REQUIRED SQUARE FOOTAGE REQUIRED.

INTERNAL TREE REQUIREMENT:

20% REQUIRED INTERIOR SHADING PER 10,000 SF IMPERVIOUS SURFACE

PARKING LOT ISLAND TREES PROVIDED = XX

XX,XXX SF / 10,000 SF PER TREE = XX TREES REQUIRED
TREES PROVIDED = XX (SEE PLANTING PLAN)

TREE SAVE AREA REQUIRED: XX,XXX SF OR 0.XX ACRES (TREE REMOVAL PERMIT TO BE SUBMITTED.)

BMP PLANT LIST

LEGEND	ZONE	KEY	QUANTITY	DENSITY	AREA	BOTANICAL NAME	COMMON NAME	SIZE	ROOT	REMARKS
	3	ASIN	494	2' O.C.	1,485 S.F.	ASCLEPIAS INCARNATA	SWAMP MILKWEED	5" HT/2" SPRD	SPRIGS	TRIANGULAR SPACING
	3	CATE	308	2' O.C.	967 S.F.	CAREX TENERA	QUILL SEDGE	5" HT/2" SPRD	SPRIGS	TRIANGULAR SPACING
	1	ELQU	242	2' O.C.	841 S.F.	ELEOCHARIS QUADRANGULATA	SQUARESTEM SPIKERUSH	5" HT/2" SPRD	SPRIGS	TRIANGULAR SPACING
	3	EUDU	235	2' O.C.	816 S.F.	EUPATORIADELPHUS DUBIUS	DWARF JOE PYE WEED	5" HT/2" SPRD	SPRIGS	TRIANGULAR SPACING
	3	HILA	214	2' O.C.	744 S.F.	HIBISCUS LAEVIS	HALBERDLEAF ROSEMALLOW	5" HT/2" SPRD	SPRIGS	TRIANGULAR SPACING
	2	IRVI	494	2' O.C.	1,732 S.F.	IRIS VIRGINICA	BLUE FLAG IRIS	5" HT/2" SPRD	SPRIGS	TRIANGULAR SPACING
	3	LOCA	195	2' O.C.	695 S.F.	LOBELIA CARDINALIS	CARDINAL FLOWER	5" HT/2" SPRD	SPRIGS	TRIANGULAR SPACING
	1	NELU	173	2' O.C.	602 S.F.	NELUMBO LUTEA	AMERICAN LOTUS	5" HT/2" SPRD	SPRIGS	TRIANGULAR SPACING
	1	NULU	254	2' O.C.	880 S.F.	NUPHAR LUTEA SPP. POLYSEPALA	CARDINAL FLOWER	5" HT/2" SPRD	SPRIGS	TRIANGULAR SPACING
	2	PEVI	470	2' O.C.	1,582 S.F.	PELTANDRA VIRGINICA	ARROW ARUM	5" HT/2" SPRD	SPRIGS	TRIANGULAR SPACING
	2	SALA	305	2' O.C.	1,073 S.F.	SAGITTARIA LANCIFOLIA	BULLTONGUE	5" HT/2" SPRD	SPRIGS	TRIANGULAR SPACING
	2	SACE	298	2' O.C.	1,014 S.F.	SAURURUS CERNUUS	LIZARD'S TAIL	5" HT/2" SPRD	SPRIGS	TRIANGULAR SPACING
	2	SCCY	700	2' O.C.	2,430 S.F.	SCIRPUS CYPERINUS	WOOL GRASS	5" HT/2" SPRD	SPRIGS	TRIANGULAR SPACING
	2	SCCO	700	2' O.C.	2,430 S.F.	SCHIZACHYRIUM SCOPARIUM	LITTLE BLUESTEM	5" HT/2" SPRD	SPRIGS	TRIANGULAR SPACING
	2	CHLA	700	2' O.C.	2,430 S.F.	CHASMANTHIUM LATIFOLIUM	RIVER OATS	5" HT/2" SPRD	SPRIGS	TRIANGULAR SPACING

ZONE 1 – DEEP POOL   ZONE 2 – SHALLOW WATER   ZONE 3 – SHALLOW LAND

LARGE SHADE TREES

KEY	QUANTITY	BOTANICAL NAME	COMMON NAME	SIZE	ROOT	REMARKS
QULA	22	QUERCUS LAURIFOLIA	LAUREL OAK	3" CAL.	B & B	MATCHED SPECIMEN
ACRU	6	ACER RUBRUM	RED MAPLE	3" CAL.	B & B	MATCHED SPECIMEN
BENI	8	BETULA NIGRA	RIVER BIRCH	3" CAL.	B & B	MATCHED SPECIMEN

SMALL SHADE TREES

KEY	QUANTITY	BOTANICAL NAME	COMMON NAME	SIZE	ROOT	REMARKS
PRYE	25	PRUNUS SERRULATA 'KWANZAN'	JAPANESE FLOWERING CHERRY	2–21/2" CAL.	B & B	MATCHED SPECIMEN
ZESE	6	ZELKOVA SERRATA	JAPANESE ZELKOVA	2–21/2" CAL.	B & B	MATCHED SPECIMEN

SHRUBS

KEY	QUANTITY	BOTANICAL NAME	COMMON NAME	MIN. HEIGHT/SPREAD	MIN. ROOT	REMARKS
ILCO	113	ILEX CORNUTA 'BUFORDII NANA'	DWARF BURFORD HOLLY	30" HT/30" SPRD	5 GAL.	MATCHED SPECIMEN
RHIN	340	RHAPHIOLEPIS INDICA	INDIAN HAWTHORNE	30" HT/30" SPRD	5 GAL.	MATCHED SPECIMEN

GROUNDCOVER

KEY	QUANTITY	BOTANICAL NAME	COMMON NAME	MIN. HEIGHT/SPREAD	MIN. ROOT	REMARKS
SOD	29,737 SF	TALL FESCUE	TALL FESCUE			

ALL DISTURBED AREAS NOT COVERED BY PLANT MATERIAL TO BE SEEDED WITH TALL FESCUE

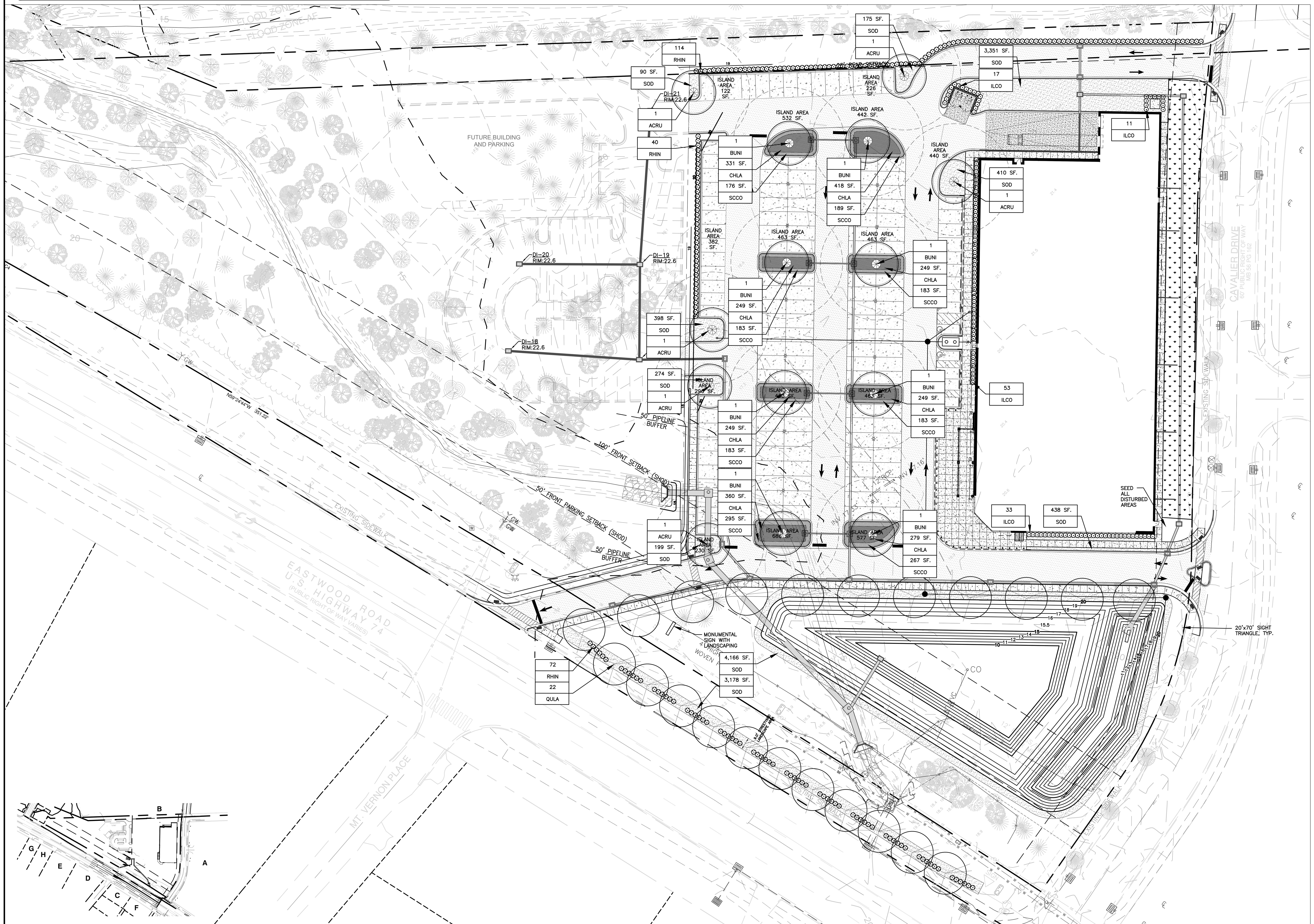

- A – WILMINGTON INDEPENDENT LIVING LL – PIN# 3157–06–27–6544 TAX PARCEL# R05600–001–005–000 (EAST) MF–MD (CD)
- B – RESERVE AT MAYFAIRE LLC – PIN# 3157–06–37–0998 & PIN# 3157–18–7124.000 TAX PARCEL# R0500–003–043–000 (NORTH) MX
- C – WILKINSON, WENDY C. – PIN# 3157–17–7252.000 TAX PARCEL# R05608–002–001–000 (SOUTH) R–15
- D – BECK, ANN W. – PIN# 3157–17–4381.000 TAX PARCEL# R05608–001–004–000 (SOUTH) R–15
- E – PIGFORD, JOHN BRADLEY – PIN# 3157–17–3401.000 TAX PARCEL# R05608–001–005–000 (SOUTH/WEST) R–15
- F – THIBODEAUX, CAROLYN W. – PIN# 3157–17–9112.000 TAX PARCEL# R05608–002–020–000 (SOUTH) R–15
- G – VAN, EEDEN LEUNIS – PIN# 3157–17–0588.000 TAX PARCEL# R05608–001–007–000 (SOUTH/WEST) R–15
- H – HOPKINS, JIMMY ALAN HOUSE – PIN# 3157–17–1434.000 TAX PARCEL# R05608–001–006–000 (SOUTH) R–15

PLANTING NOTES:

1. MINIMUM TREE SIZE AT PLANTING IS 2–INCH CALIPER (FOR SINGLE STEM TREES). SMALL MATURING MULTI–STEM TREES MUST BE TREE FORM, MAXIMUM 3 TO 5 TRUNKS, AND MINIMUM 8 FEET TALL.
2. UNLESS APPROVED BY CITY STAFF ALL REQUIRED TREES MUST HAVE SINGLE STEM TRUNKS WITH NO CO–DOMINANT TRUNKS BRANCHES. TREE TRUNKS SHALL BE STRAIGHT IN FORM AND FREE OF DAMAGE OR CRACKS. PRUNING CUTS SHALL BE CALLUSED OVER. BRANCH LENGTH SHALL BE TYPICAL FOR THE TREES AGE AND NOT BE BROKEN, DISEASED OR INJURED. ROOT FLARE SHALL BE LOCATED AT GRADE AND BE FREE FROM EXCESSIVE ADVENTITIOUS ROOT GROWTH.
3. ALL STRAPPING AND TOP ⅔ OF WIRE BASKET MUST BE CUT AWAY AND REMOVED FROM ROOT BALL PRIOR TO BACKFILLING PLANTING PIT. REMOVE TOP ⅓ OF THE BURLAP FROM ROOT BALL.
4. FOR NEW PLANTING AREAS, REMOVE ALL PAVEMENT, GRAVEL SUB–BASE AND CONSTRUCTION DEBRIS; REMOVE COMPACTED SOIL AND ADD 24" NEW TOPSOIL, OR TILL AND AMEND THE TOP 24" OF EXISTING SOIL TO MEET TOPSOIL/ PLANTING MIX STANDARDS FOR TREES WITHIN ENTIRE MINIMUM AREA OF 274 SQUARE FEET PER TREE.
5. LARGE MATURING TREES MAY NOT BE PLANTED WHERE THERE ARE OVERHEAD DISTRIBUTIONS OR TRANSMISSION LINES. IF TREES CONFLICT WITH POWER LINES OR SIGNS, CALL CITY SPECIALIST TO RESOLVE BEFORE PLANTING.
6. SITE LIGHTING MUST BE A MINIMUM THIRTY (30) FEET AWAY FROM A TREE. IF PEDESTRIAN SCALE LIGHTING IS BEING USED, THEN LIGHTING MUST BE A MINIMUM OF FIFTEEN (15) FEET AWAY FROM A TREE, UNLESS APPROVED OTHERWISE BY THE CITY. SHOW SITE LIGHTING PLAN.
7. ADJUST TREE PLANTING LOCATIONS TO AVOID UNDERGROUND UTILTIES. PLANT 15' FROM ALL UNDERGROUND UTILITIES (GAS, WATER, PHONE, AND ELECTRICAL LINES.)
9. ATTENTION LANDSCAPER: NOTIFY LANDSCAPE ARCHITECT OF ANY SIGN, POWER LINE, OR OTHER CONFLICTS BEFORE PLANTING NEW TREES.
12. ALL LANDSCAPE MATERIALS SHALL BE IN ACCORDANCE WITH THE 'AMERICAN STANDARD FOR NURSERY STOCK' AND SHALL BE INSPECTED PRIOR TO PLANTING.
13. CONTRACTOR IS RESPONSIBLE TO REVIEW ALL UTILITY LOCATIONS PRIOR TO EXCAVATION OR MATERIAL INSTALLATION.
14. CONTRACTOR IS RESPONSIBLE FOR SOIL PREPARATION, ADDITIVE OF NUTRIENT AND FERTILIZATION PER TESTING AS OUTLINED IN SPECIFICATIONS.
15. IF ANY DISCREPANCIES OCCUR BETWEEN QUANTITIES OF MATERIAL SHOWN ON THE PLAN AND QUANTITIES LISTED IN THE PLANT LIST, THE QUANTITIES GRAPHICALLY SHOWN ON THE PLAN SHALL TAKE PRECEDENCE.
16. SOIL AMENDMENTS SHALL BE UNIFORMLY SPREAD AND ROTOTILLED INTO SOIL PER SPECIFICATIONS.
17. CONTRACTOR SHALL NOTIFY ARCHITECT OF ANY SOIL CONDITIONS THE CONTRACTOR CONSIDERS DETRIMENTAL TO PLANT GROWTH.
18. ALL PLANT BEDS AND NEW TREES SHALL BE MULCHED WITH 3" THICK LAYER OF DOUBLE HAMMERED HARDWOOD MULCH.
19. CONTRACTOR IS RESPONSIBLE FOR THE SOIL PREPARATION AND SEEDING OF ALL NEW LAWN AND DISTURBED EXISTING LAWN AREAS.
20. IN ADDITION TO THE SOIL MIXTURE, LANDSCAPE CONTRACTOR IS RESPONSIBLE FOR PROVIDING AND INSTALLING ANY NECESSARY SOIL AMENDMENTS, AS INDICATED BY SOIL TESTS, AS WELL AS, AN ADEQUATE DRAINAGE SYSTEM FOR PLANTING BEDS. LANDSCAPE CONTRACTOR IS RESPONSIBLE FOR PROVIDING AN ENVIRONMENT SUITABLE FOR THE GROWTH OF HEALTHY PLANT MATERIAL. REFER TO PLANTING DETAILS FOR INFORMATION ON PLANTING BED PREPARATIONS.

21 ALL PLANT MATERIAL MUST BE PLANTED IN CORRELATION WITH THE APPROPRIATE GROWING SEASON OF INDIVIDUAL PLANT REQUIREMENTS. SOME PERENNIALS MAY REQUIRE A SPRING PLANTING IN ORDER TO SURVIVE A FULL WINTER DORMANCY.

22. PROVIDE QUALITY, SIZE, GENUS, SPECIES AND VARIETY OF EXTERIOR PLANTS INDICATED, COMPLYING WITH APPLICABLE REQUIREMENTS IN ANSI 260.1, 'AMERICAN STANDARD FOR NURSERY STOCK'
23. IT IS THE LANDSCAPE CONTRACTORS RESPONSIBILITY TO UNDERSTAND THE OVERALL CONSTRUCTION SCHEDULE AND PLAN PLANT DIGGING AND INSTALLATION ACCORDINGLY. IF THE LANDSCAPE CONTRACTOR IS REQUIRED TO RETURN TO THE SITE AT A LATER DATE DURING AN APPROPRIATE PLANTING SEASON, IT SHALL BE AT NO COST TO THE OWNER. LANDSCAPE CONTRACTOR WILL BE RESPONSIBLE TO REPAIR ANY DAMAGE CAUSED TO LAWNS, EXISTING LANDSCAPING OR PAVEMENTS AT NO COST TO THE OWNER.
24. PRIOR TO CLEARING, GRADING, OR CONSTRUCTION ACTIVITY, TREE PROTECTION FENCING WILL BE INSTALLED AROUND PROTECTED TREES OR GROVES OF TREES. AND NO CONSTRUCTION WORKERS, TOOLS, MATERIALS, OR VEHICLES ARE PERMITTED WITHIN THE TREE PROTECTION FENCING.

CAUTION!!!

The locations and elevations of existing underground utilities as shown on this drawing are only APPROXIMATE. No guarantee is either expressed or implied as to the completeness of accuracy thereof. The contractor shall be exclusively responsible for determining the exact utility locations and elevations prior to the start of construction

GRAPHIC SCALE

30 0 15 30 60 120

1" = 30'

CALL BEFORE YOU DIG 1-800-632-4949 NORTH CAROLINA ONE CALL SYSTEM

LITTLE
DIVERSIFIED ARCHITECTURAL CONSULTING
5815 Westpark Drive Charlotte, NC 28217
T: 704.525.6350 F: 704.561.8700
www.littleonline.com

This drawing and the design shown are the property of Little Diversified Architectural Consulting. The reproduction, copying or other use of this drawing without their written consent is prohibited and any infringement will be subject to legal action.

© Little 2015

LITTLE DIVERSIFIED ARCHITECTURAL CONSULTING, INC. REGISTERED ARCHITECTURAL CORPORATION CERT. NO. 50033 NORTH CAROLINA CHARLOTTE, N.C.

NORTH CAROLINA LANDSCAPE ARCHITECT 885 DAVID C. POWLEN 2/18/16

ISSUE FOR
NOT FOR CONSTRUCTION
TRC REVIEW

ISSUE DATE
02/18/2016

REVISIONS

NO.	REASON	DATE

PROJECT TEAM
PRINCIPAL IN CHARGE
DAVID POWLEN, RLA, LEED AP
PROJECT MANAGER
DAVID POWLEN, RLA, LEED AP
DESIGN TEAM
CC

PROJECT NAME
LiDL GROCERY
EASTWOOD ROAD

1451 EASTWOOD RD
WILMINGTON, NC

PROJECT NUMBER
124.4360.00

SHEET TITLE
LANDSCAPE PLAN

SHEET NUMBER
L1.00

1. No plantings over thirty (30) inches in height allowed in vision clearance.
2. Protection from vehicular traffic provided around all landscaping with a minimum height of six (6) inches.
3. Owner is responsible for maintenance to ensure plant material lives and prospers.
4. Planting plans shall be approved by Landscape Designer prior to installation.
5. Landscaping shall be required at the ends of all parking rows.
6. A low buffer shall be required where parking is within fifty (50) feet of the Right-of-Way.
7. Landscaped islands shall be a minimum width of twelve (12) feet (back of curb to back of curb) and a minimum of two hundred and sixteen (216) square feet.
8. A minimum of fifteen (15) trees 2 inches or greater in diameter as measured 6 inches above ground per disturbed acre.
9. For recommended Plant List see "Landscape" T-10.4.

DATE: APRIL, 2008	STANDARD DETAIL
DRAWN BY JSR	LANDSCAPE NOTES
CHECKED BY B.P., P.E.	
SCALE NOT TO SCALE	

CITY OF WILMINGTON NORTH CAROLINA
CITY OF WILMINGTON ENGINEERING
PO BOX 1810
WILMINGTON, NC 28402
(910) 341-7807

SD 15-14

8 LANDSCAPE NOTES
NOT TO SCALE

RESIDENTIAL STREET TREE STANDARDS

1. Street trees shall be installed along residential streets after all driveways have been installed.
2. The developer shall notify Landscape Designer prior to installation to ensure proper tree selection and spacing.
3. Each tree shall be a minimum of two (2) caliper inches.
4. Phasing of a project shall be permitted, however, Street Trees on the same block shall be planted at the same time to avoid size irregularities.
5. Trees within the same block shall be the same species.

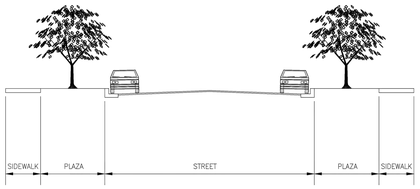

RECOMMENDED STREET TREE SPACING ACCORDING TO PLAZA WIDTHS

4'-6'	6'-8'	GREATER THAN 8'
ex. CREPE MYRTLE HOLLY	ex. JAPANESE MAPLE ZELKOVA	ex. DARLINGTON OAK RED MAPLE
25'-30' SPACING	35'-40' SPACING	50' SPACING

DATE: 2006	STANDARD DETAIL
DRAWN BY JSR	RESIDENTIAL STREET TREE STANDARDS
CHECKED BY B.P., P.E.	
SCALE NOT TO SCALE	

CITY OF WILMINGTON NORTH CAROLINA
CITY OF WILMINGTON ENGINEERING
PO BOX 1810
WILMINGTON, NC 28402
(910) 341-7807

SD 15-17

7 RESIDENTIAL STREET TREE STANDARDS
NOT TO SCALE

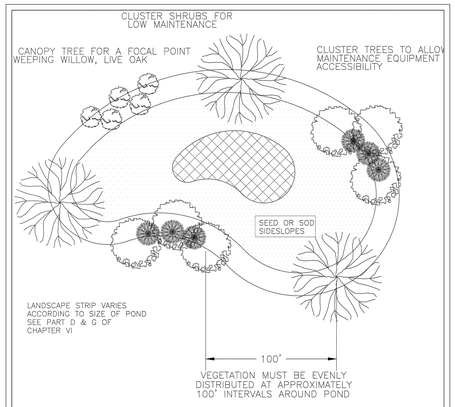

Notes:
1. If possible, locate pond where vegetation exists.
2. Suggest minimal clearing to conserve visual quality of site and minimize the additional of tree planting. An irregular shape provides a more natural appearance.
3. Landscape strip shall be a maximum slope of 7:1 in order to plant vegetation.
4. Provide a minimum of 3 inches of mulch around all vegetation.

DATE: JULY 2003	STANDARD DETAIL
DRAWN BY JSR	TYPICAL STORM WATER FACILITY LANDSCAPING PLAN
CHECKED BY B.P., P.E.	
SCALE NOT TO SCALE	

CITY OF WILMINGTON NORTH CAROLINA
CITY OF WILMINGTON ENGINEERING
PO BOX 1810
WILMINGTON, NC 28402
(910) 341-7807

SD 15-16

6 TYP. STORM WATER FACILITY LANDSCAPE PLAN
NOT TO SCALE

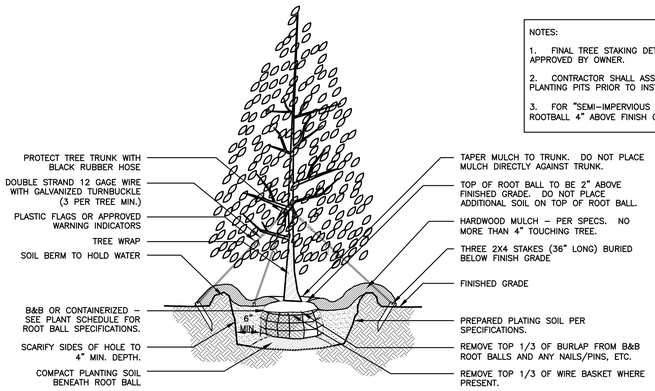

NOTES:
1. FINAL TREE STAKING DETAILS AND PLACEMENT TO BE APPROVED BY OWNER.
2. CONTRACTOR SHALL ASSURE PERCOLATION OF ALL PLANTING PITS PRIOR TO INSTALLATION.
3. FOR "SEMI-IMPERVIOUS SOIL CONDITIONS INSTALL ROOTBALL 4" ABOVE FINISH GRADE.

5 EVERGREEN TREE
NOT TO SCALE

NOTES:
1. FOR NEW PLANTING AREAS, REMOVE ALL PAVEMENT, GRAVEL SUB-BASE AND CONSTRUCTION DEBRIS BEFORE AMENDING SOIL AND PLANTING TREES.
2. PLANTING PIT SOIL MIXTURE: AMEND EXISTING SOIL WITH 3 PARTS TOPSOIL, 1 PART COARSE SAND AND 1 PART COMPOST/PEAT MOSS.
3. REFER TO LANDSCAPE SPECIFICATIONS FOR TOPSOIL/PLANTING MIX SPECIFICATIONS.

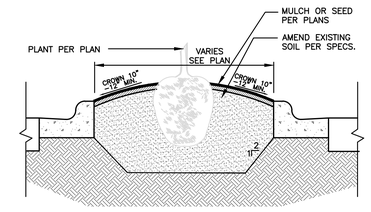

4 PARKING ISLAND PLANTER
NOT TO SCALE

NOTE:
APPLY HARDWOOD MULCH IN A 6' DIAMETER RING WHERE TREE PLANTINGS OCCUR IN GRASS AREAS.

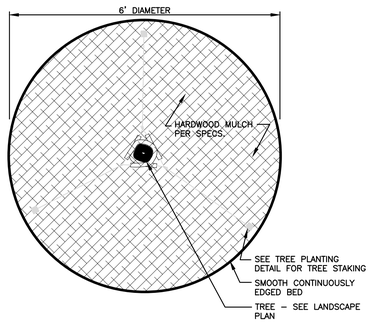

3 MULCH RING
NOT TO SCALE

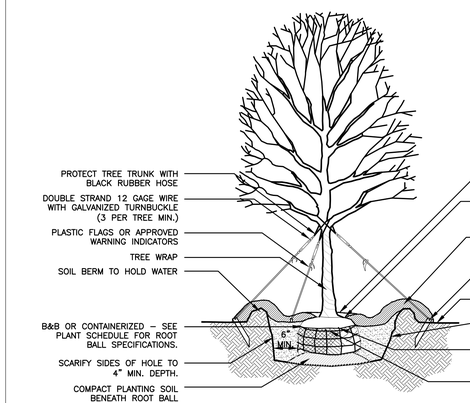

NOTES:
1. FINAL TREE STAKING DETAILS AND PLACEMENT TO BE APPROVED BY OWNER.
2. CONTRACTOR SHALL ASSURE PERCOLATION OF ALL PLANTING PITS PRIOR TO INSTALLATION.
3. FOR "SEMI-IMPERVIOUS SOIL CONDITIONS INSTALL ROOTBALL 4" ABOVE FINISH GRADE.

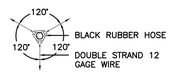

PLAN

2 LARGE MATURING TREE
NOT TO SCALE

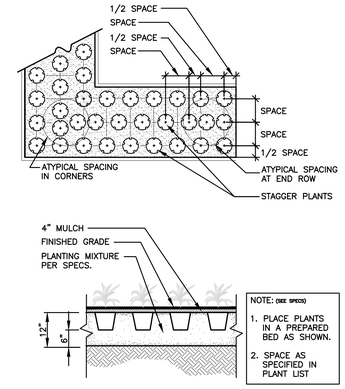

1 PLANT MASSING & GROUNDCOVER
NOT TO SCALE

LITTLE
DIVERSIFIED ARCHITECTURAL CONSULTING
5815 Westpark Drive Charlotte, NC 28217
T: 704.525.6350 F: 704.561.8700
www.littleonline.com

This drawing and the design shown are the property of Little Diversified Architectural Consulting. The reproduction, copying or other use of this drawing without their written consent is prohibited and any infringement will be subject to legal action.
© Little 2015

LITTLE DIVERSIFIED ARCHITECTURAL CONSULTING, INC. CERT. NO. 50033 NORTH CAROLINA CHARLOTTE, NC

NORTH CAROLINA PROFESSIONAL ENGINEER SEAL 034844 ENGINEERING 01/18/16

NORTH CAROLINA LANDSCAPE ARCHITECT SEAL 835 PHILIP C. POPPLEWELL 2/18/16

ISSUE FOR
NOT FOR CONSTRUCTION TRC REVIEW

ISSUE DATE
02/18/2016

REVISIONS

NO.	REASON	DATE

PROJECT TEAM
PRINCIPAL IN CHARGE
DAVID POWLEN, RLA, LEED AP
PROJECT MANAGER
DAVID POWLEN, RLA, LEED AP
DESIGN TEAM
GSB

PROJECT NAME
LIDL GROCERY
EASTWOOD ROAD

1451 EASTWOOD RD
WILMINGTON, NC

PROJECT NUMBER
124.4360.00

SHEET TITLE
LANDSCAPE DETAILS

SHEET NUMBER
L1.01