SITE DEVELOPMENT PLAN

FOR

ELLINGTON FARMS

WILMINGTON, NORTH CAROLINA

JUNE 2014

VICINITY MAP

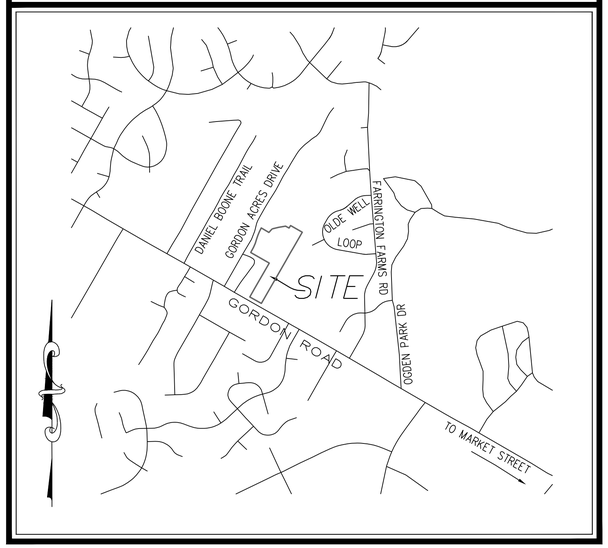

VICINITY MAP
(NTS)

LEGEND

DESCRIPTION	EXISTING	PROPOSED
1' CONTOUR INTERVAL		
5' CONTOUR INTERVAL		
PROPERTY LINE		
ROADWAY CENTERLINE		
RIGHT OF WAY LIMITS		
EASEMENT LINE		
CURB & GUTTER		
SANITARY SEWER FACILITIES		
STORM SEWER FACILITIES		
WATERLINE		
FIRE HYDRANT ASSEMBLY		
WATERWAYS		N/A

	PROPOSED
PROPOSED LOT AND S.F.	X 5,000 s.f.
OPEN SPACE LABEL	A
OPEN SPACE	
BUILDING SET BACKS	
PRIVATE SANITARY SET BACKS	
STREET SIGN	
404 WETLANDS	
FLOW DIRECTION	

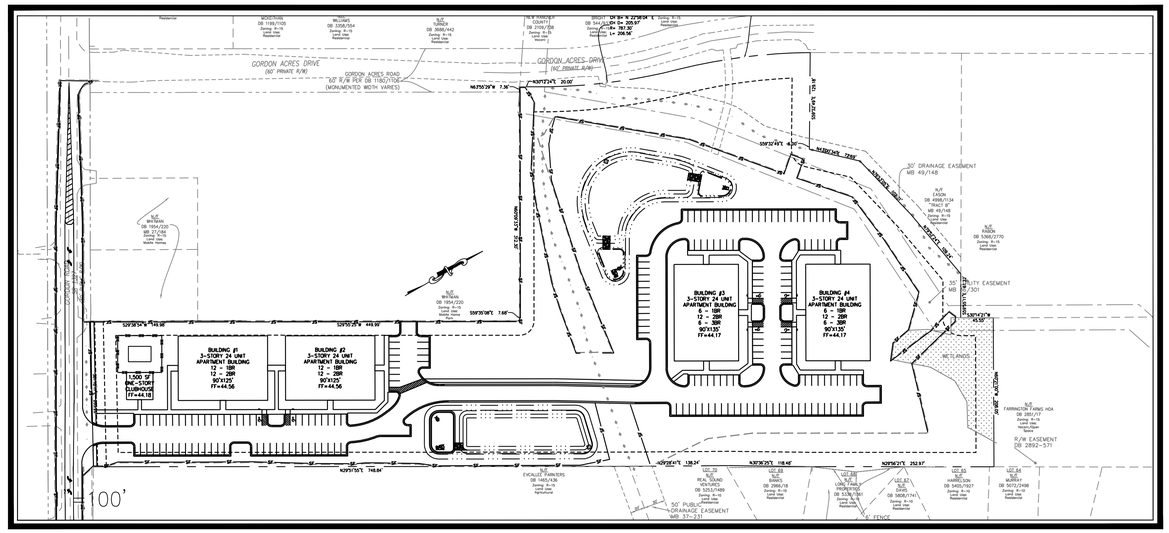

DEVELOPER/OWNER

ELLINGTON FARMS APARTMENTS, LLC
6626-C GORDON ROAD
WILMINGTON, NC 28411
PHONE: (910) 799-3006

PREPARED BY:

GSP CONSULTING, PLLC

ENGINEERING

6626 Gordon Road, Unit C, Wilmington, North Carolina 28411 tel: 910-442-7870 fax: 910-799-6659 License # P-0718

INDEX OF SHEETS

SHT C-0	COVER SHEET
SHT C-1	GENERAL NOTES
SHT C-2	EXISTING CONDITIONS PLAN
SHT C-2.1	SITE INVENTORY PLAN
SHT C-3.1	OVERALL SITE PLAN
SHT C-3.2	SITE PLAN
SHT C-4	UTILITY PLAN
SHT C-5	GRADING, DRAINAGE & EROSION & SEDIMENT CONTROL PLAN
SHT C-6	INFILTRATION TRENCH DETAILS
SHT C-7	STANDARD DETAILS
SHT C-8	STANDARD DETAILS
SHT L-1	LANDSCAPE PLAN
SHT L-2	OVERALL LANDSCAPE PLAN

CITY OF WILMINGTON NORTH CAROLINA
Public Services • Engineering Division
APPROVED STORMWATER MANAGEMENT PLAN
Date:_____ Permit #_____
Signed: _____

Approved Construction Plan

	Name	Date
Planning		
Traffic		
Fire		

SITE DATA TABLE

GENERAL NOTES:

1. NEW HANOVER COUNTY PARCEL NOS.:
   PIN# 315917.01.2353
2. TOTAL AREA: 9.99 AC.±
3. EXISTING ZONING: MF-L (CD)
   PROPOSED REZONE TO MF-L (CD)

SETBACKS	REQUIRED	PROPOSED
	35' FRONT	48' FRONT
	25' REAR	93' REAR
	20' SIDE	21' SIDE

4. THIS PROPERTY IS NOT WITHIN A SPECIAL FLOOD HAZARD ZONE PER FEMA FLOOD INSURANCE RATE MAP #3720315900J, EFFECTIVE DATE APRIL 3, 2006.
5. CAMA LAND CLASSIFICATION: URBAN

DEVELOPMENT DATA:

Total Tract Area = 435,098 SF = 9.99 ac

Permitted Density (@ 10 units/ac) = 100 units
Proposed Density 96 units = 9.6 units/ac

Building Coverage - 50,100 sf (11.5%)
(4) @ 90' X 135' = 48,600 sf + Clubhouse = 1,500 sf

Total Gross Floor Area - 147,300 sf GFA
(12) Floors @ 12,150 sf = 145,800 sf
+ Clubhouse = 1,500 sf

4 APARTMENT BUILDINGS & CLUBHOUSE

Total Bedrooms - 168
36 X 1 BR = 36 BR
48 X 2 BR = 96 BR
12 X 3 BR = 36 BR

Max. Bldg. Hgts. - 35' Mean Roof

Parking -
36 - 1 BR units x 1.5 min sp/unit = 54
48 - 2 BR units x 2.0 min sp/unit = 96
12 - 3 BR units x 2.25 min sp/unit = 27
1,500 sf Clubhouse @ 1 min sp/400 sf = 4
Minimum Total Spaces req'd. = 181
193 total spaces provided (6 H/C)
(Note: Bike Racks to be provided @ 1/12 units)

IMPERVIOUS SURFACES -
PROPOSED BUA -

ROOFTOPS -	48,600 S.F.
PAVEMENT -	77,807 S.F.
CONCRETE -	9,307 S.F.
POOL FACILITY -	4,500 S.F.
TOTAL -	140,214 S.F. (32.2%)

Open Space - (min. 35% req'd.)
9.99 ac. - 0.93 ac. (pond area) - 0.64 ac. (streams) X 35%
= 2.95 ac. req'd.
** 4.95 ac. (49.5%) Open Space prov'd. **
[Estimated area prov'd. is total tract area minus interior planting islands (0.18 ac.), Streetyards (0.07 ac.) & Internal Impervious Surfaces (3.22 ac.)]
Recreation Area - (min. 50% Open Space)
1.48 ac. Rec. Space req'd.
Active Rec req'd. = 0.74 ac.
Active Rec prov'd. = 0.74 ac.
Passive Rec Area req'd. = 0.74 ac.
Passive Area prov'd. = 0.74 ac.±
** Total Rec Area prov'd. = 1.48 ac. **

Utility Capacity Requests:
Existing Sewer Capacity -
23 units @ 360 GPD/Unit = 8,280 GPD
Existing Water Capacity -
23 Units @ 400 GPD/Unit = 9,200 GPD
Proposed Sewer Capacity -
36 units @ 240 GPD/Unit = 8,640 GPD
48 units @ 240 GPD/Unit = 11,520 GPD
12 units @ 360 GPD/Unit = 4,320 GPD
TOTAL = 24,480
Proposed Water Capacity -
94 Units @ 400 GPD/Unit = 37,600 GPD
** Add'l. Sewer Capacity Requested = 16,200 GPD
** Add'l. Water Capacity Requested = 28,400 GPD

For each open utility cut of City streets, a $325 permit shall be required from the City prior to occupancy and/or project acceptance.

NORTH CAROLINA PROFESSIONAL SEAL 031315 ENGINEER GARRY S. PAPE
06/18/2014

NOTE:
ALL DESIGN AND CONSTRUCTION SHALL BE IN CONFORMANCE WITH THE CITY OF WILMINGTON LAND DEVELOPMENT CODE, TECHNICAL STANDARDS MANUAL & THE STATE OF NORTH CAROLINA

PROJECT NAME: ELLINGTON FARMS
GSP CONSULTING PROJECT #: 2014-0001

COORDINATION NOTES

1. THE CONTRACTOR IS REQUIRED TO OBTAIN ANY/ALL PERMITS REQUIRED FOR CONSTRUCTION OF THESE PLANS.
2. ALL WORK IS TO BE IN ACCORDANCE WITH CITY OF WILMINGTON, NEW HANOVER COUNTY, THE CAPE FEAR PUBLIC UTILITY AUTHORITY (CFPUA) AND THE STATE OF NORTH CAROLINA.
3. THE CONTRACTOR IS TO ESTABLISH AND CHECK ALL HORIZONTAL AND VERTICAL CONTROLS TO BE USED WITH THE PROJECT. IN ADDITION, THE CONTRACTOR IS TO COMPUTE THE LAYOUT OF THE ENTIRE SITE PLAN IN ADVANCE OF BEGINNING ANY WORK ASSOCIATED WITH THE SUBJECT PLANS. CONTRACTOR SHALL EMPLOY A PROFESSIONAL SURVEYOR TO PERFORM SITE IMPROVEMENT STAKEOUT(S).
4. ANYTIME WORK IS PERFORMED OFF-SITE OR WITHIN AN EXISTING EASEMENT, THE CONTRACTOR IS TO NOTIFY THE HOLDER OF SAID EASEMENT AS TO THE NATURE OF PROPOSED WORK, AND TO FOLLOW ANY GUIDELINES OR STANDARDS WHICH ARE ASSOCIATED WITH OR REFERENCED IN THE RECORDED EASEMENT.

GENERAL NOTES:

1. EXISTING TOPOGRAPHY, BOUNDARY AND UTILITIES, HAVE BEEN PREPARED BY FIELD SURVEY BY ATLANTIC COAST SURVEY, PLLC., PREVIOUSLY APPROVED PLANS AND OTHER AVAILABLE INFORMATION.
2. REASONABLE CARE HAS BEEN EXERCISED IN SHOWING THE LOCATION OF EXISTING UTILITIES ON THE PLANS. THE EXACT LOCATION OF ALL EXISTING UTILITIES IS NOT KNOWN IN ALL CASES. THE CONTRACTOR SHALL EXPLORE THE AREA AHEAD OF DITCHING OPERATIONS BY OBSERVATIONS, ELECTRONIC DEVICES, HAND DIGGING AND BY PERSONAL CONTACT WITH THE UTILITY COMPANIES. IN ORDER TO LOCATE EXISTING UTILITIES IN ADVANCE OF TRENCHING OPERATIONS SO AS TO ELIMINATE OR MINIMIZE DAMAGE TO EXISTING UTILITIES. THE CONTRACTOR SHALL BE RESPONSIBLE FOR ALL COSTS RESULTING FROM ANY DAMAGE TO THE EXISTING UTILITY LINES INCLUDING LOSS OF UTILITY REVENUES. CONTRACTOR SHALL ARRANGE FOR TEMPORARY SUPPORT OF EXISTING UTILITIES, SUCH AS POLES, CONDUITS, FIBER OPTIC CABLES, TELEPHONE CABLES, WATER LINES, ETC...
3. CONTRACTOR SHALL COMPLY WITH THE LATEST REVISIONS AND INTERPRETATIONS OF THE DEPARTMENT OF LABOR SAFETY AND HEALTH REGULATIONS FOR CONSTRUCTION PROMULGATED UNDER THE OCCUPATIONAL SAFETY AND HEALTH ACT.
4. CONTRACTOR SHALL PLAN AND CONSTRUCT WORK SO AS TO CAUSE MINIMUM INCONVENIENCE TO THE OWNER AND THE PUBLIC. THE CONTRACTOR SHALL PROVIDE, ERECT AND MAINTAIN AT ALL TIMES DURING THE PROGRESS OR TEMPORARY SUSPENSION OF WORK, SUITABLE BARRIERS, FENCES, SIGNS OR OTHER ADEQUATE PROTECTION, INCLUDING FLAGMEN AND WATCHMEN AS NECESSARY TO INSURE THE SAFETY OF THE PUBLIC AS WELL AS THOSE ENGAGED IN THE CONSTRUCTION WORK. CONSTRUCTION SIGNING SHALL BE IN ACCORDANCE WITH THE LATEST EDITION OF "CONSTRUCTION AND MAINTENANCE OPERATIONS SUPPLEMENT TO THE MANUAL ON UNIFORM TRAFFIC CONTROL DEVICES" BY THE DOT.
5. ALL MATERIAL CLEARED OR DEMOLISHED BY THE CONTRACTOR IN ORDER TO CONSTRUCT THE WORK SHALL BECOME THE PROPERTY OF THE CONTRACTOR AND SHALL BE PROPERLY DISPOSED OF OFF-SITE.
6. ALL WORK BY THE CONTRACTOR SHALL BE WARRANTED BY THE CONTRACTOR FOR A PERIOD OF ONE YEAR AFTER THE OWNER ACCEPTS THE WORK.
7. CONTRACTOR SHALL CALL THE NORTH CAROLINA ONE-CALL CENTER AT 1 (800) 632-4949 AND ALLOW THE CENTER TO LOCATE EXISTING UTILITIES BEFORE DIGGING.
8. CONTRACTOR SHALL REMOVE ASPHALT, AGGREGATE BASE COURSE, AND CONCRETE CURB & GUTTER WITHIN LIMITS OF DEMOLITION AS SHOWN ON PLAN.

DEMOLITION NOTES

1. CONTRACTOR TO COORDINATE WITH THE OWNER TO PROPERLY MAINTAIN OR RELOCATE EXISTING SERVICE CONNECTIONS WHEN NECESSARY
2. CONTRACTOR IS TO WALK THE SITE AND BECOME FAMILIAR WITH THE SCOPE OF DEMOLITION REQUIRED. ALL DEMOLITION WORK REQUIRED TO CONSTRUCT NEW SITE IMPROVEMENTS WILL BE PERFORMED BY THE CONTRACTOR AND WILL BE UNCLASSIFIED EXCAVATION.
3. DEMOLITION SHALL INCLUDE BUT IS NOT LIMITED TO THE EXCAVATION, HAULING AND OFFSITE DISPOSAL OF CONCRETE PADS, CONCRETE DITCHES, FOUNDATIONS, SLABS, STEPS, AND STRUCTURES; ABANDONED UTILITIES, BUILDINGS, PAVEMENTS AND ALL MATERIALS CLEARED AND STRIPPED TO THE EXTENT NECESSARY AS DIRECTED BY THE SOILS ENGINEER FOR THE INSTALLATION OF THE NEW IMPROVEMENTS AND WITHIN THE LIMITS OF CLEARING AND GRADING AND AS SHOWN ON THESE PLANS.
4. THE CONTRACTOR SHALL PROTECT ALL ADJACENT PROPERTY, STRUCTURES AND UTILITIES ON THE PROPERTY NOT TO BE DEMOLISHED. DAMAGE TO PROPERTIES OF OTHERS DUE TO THE CONTRACTOR'S ACTIVITIES SHALL BE REPLACED IN KIND BY THE CONTRACTOR AT NO COST TO OWNER.
5. ELECTRIC, TELEPHONE, SANITARY SEWER, WATER AND STORM SEWER UTILITIES THAT SERVICE OFF-SITE PROPERTIES SHALL BE MAINTAINED DURING THE CONSTRUCTION PROCESS BY THE CONTRACTOR.
6. EXISTING UTILITIES NOT INTENDED FOR DEMOLITION SHALL BE MAINTAINED, PROTECTED AND UNDISTURBED DURING DEMOLITION
7. ALL EXISTING IMPROVEMENTS INDICATED OR REQUIRED TO BE DEMOLISHED SHALL INCLUDE REMOVAL FROM THE PROPERTY AND PROPER DISPOSAL.
8. CONTRACTOR SHALL COORDINATE RELOCATION OF ALL EXISTING OVER HEAD AND UNDERGROUND UTILITIES INCLUDING CABLE, GAS, TELEPHONE AND ELECTRIC AND ANY OTHER UTILITIES THROUGH THE SITE WITH THE RESPECTIVE COMPANIES.
9. PROVIDE SMOOTH SAW CUT OF EXISTING PAVEMENTS, CURBS AND GUTTERS AND SIDEWALKS TO BE DEMOLISHED.
10. ALL DEMOLITION WORK SHALL BE DONE IN STRICT ACCORDANCE WITH LOCAL, STATE AND FEDERAL REGULATIONS AS WELL AS OSHA REGULATIONS.
11. INFORMATION CONCERNING UNDERGROUND UTILITIES WAS OBTAINED FROM AVAILABLE RECORDS, BUT THE THE CONTRACTOR MUST DETERMINE THE EXACT LOCATION AND ELEVATIONS OF THE MAINS BY DIGGING TEST PITS BY HAND.

EROSION AND SEDIMENT CONTROL NOTES

GENERAL NOTES:

1. CLEAR AND REMOVE FROM SITE ALL TREES, ROOTS, ROOT MAT, ETC. FROM THE AREA WITHIN DESIGNATED CLEARING LIMITS.
2. PLANT GRASS OVER ALL GRADED AREAS AS SHOWN IN THE TABLE ON THIS SHEET OF CEASE OF ANY GRADING ACTIVITY.
3. CONTRACTOR SHALL BE RESPONSIBLE FOR CLEANING AND RESTORING TO PRE-CONSTRUCTION CONDITIONS ANY AREAS OUTSIDE THE PROJECT LIMITS THAT MAY INADVERTENTLY BE DAMAGED DUE TO THE FAILURE OF THE EROSION MEASURES
4. DURING GRADING AND AFTER GRADING HAS BEEN COMPLETED, CONTRACTOR SHALL CONTINUE TO MAINTAIN PERMANENT AND TEMPORARY EROSION CONTROL MEASURES UNTIL FINAL INSPECTION AND APPROVAL BY NEW HANOVER COUNTY.
5. WATER, FERTILIZE, MOW AND MAINTAIN SPRIGGED, SODDED AND PLANTED AREAS UNTIL FINAL APPROVAL BY NEW HANOVER COUNTY.
6. ANY BORROW MATERIAL BROUGHT ONTO SITE MUST BE FROM A LEGALLY OPERATED MINE OR OTHER APPROVED SOURCE.
7. ANY EXCESS MATERIAL REMOVED FROM SITE MUST BE HAULED TO A LEGALLY OPERATED MINE OR OTHER APPROVED SOURCE.

MAINTENANCE PLAN

1. ALL EROSION AND SEDIMENT CONTROL PRACTICES WILL BE CHECKED FOR STABILITY AND OPERATION FOLLOWING EVERY RUNOFF-PRODUCING RAINFALL BUT IN NO CASE LESS THAN ONCE EVERY WEEK. ANY NEEDED REPAIRS WILL BE MADE IMMEDIATELY TO MAINTAIN ALL PRACTICES AS DESIGNED.
2. ALL CONSTRUCTION ENTRANCES WILL BE PERIODICALLY TOP DRESSED WITH AN ADDITIONAL 2 INCHES OF #4 STONE TO MAINTAIN PROPER DEPTH. ANY SEDIMENT THAT IS TRACKED INTO THE STREET WILL BE IMMEDIATELY REMOVED.
3. SEDIMENT WILL BE REMOVED BEHIND THE SEDIMENT FENCE WHEN IT BECOMES 0.5 FEET DEEP AT THE FENCE. THE SEDIMENT FENCE WILL BE REPAIRED AS NECESSARY TO MAINTAIN A BARRIER. SILT FENCE STAKES WILL BE SPACED 6 FEET APART UNLESS A WIRE BACKING IS USED WITH 8 FOOT STAKE SPACING.
4. INSPECT INLET PROTECTION AT LEAST WEEKLY AND AFTER EACH SIGNIFICANT (1/2 INCH OR GREATER) RAINFALL EVENT. CLEAR THE MESH WIRE OF ANY DEBRIS OR OTHER OBJECTS TO PROVIDE ADEQUATE FLOW FOR SUBSEQUENT RAINS. TAKE CARE NOT TO DAMAGE OR UNDERCUT THE WIRE MESH DURING SEDIMENT REMOVAL. REPLACE STONE AS NEEDED.

   INSPECT SILT SACKS AT LEAST WEEKLY AND AFTER EACH SIGNIFICANT (1/2 INCH OR GREATER) RAINFALL EVENT. CLEAR THE SILT SACK OF ANY DEBRIS OR OTHER OBJECTS TO PROVIDE ADEQUATE FLOW FOR SUBSEQUENT RAINS. TAKE CARE NOT TO DAMAGE THE SILT SACK DURING SEDIMENT REMOVAL. REPLACE AS NEEDED.
5. ALL SEEDED AREAS WILL BE FERTILIZED, RESEEDED AS NECESSARY, AND MULCHED ACCORDING TO SPECIFICATIONS IN THE VEGETATIVE PLAN TO MAINTAIN A VIGOROUS, DENSE VEGETATIVE COVER.
6. INSPECT SEDIMENT BASINS AT LEAST WEEKLY AND AFTER EACH SIGNIFICANT (ONE-HALF INCH OR GREATER) RAINFALL EVENT AND REPAIR IMMEDIATELY. REMOVE SEDIMENT AND RESTORE THE BASIN TO ITS ORIGINAL DIMENSIONS WHEN SEDIMENT ACCUMULATES TO ONE-HALF THE DESIGN DEPTH.

   CHECK THE FABRIC LINED SPILLWAY FOR DAMAGE AND MAKE ANY REQUIRED REPAIRS WITH FABRIC THAT SPANS THE FULL WIDTH OF THE SPILLWAY. CHECK THE EMBANKMENT, SPILLWAYS, AND OUTLET FOR EROSION DAMAGE, AND INSPECT THE EMBANKMENT FOR PIPING AND SETTLEMENT. MAKE ALL NECESSARY REPAIRS IMMEDIATELY. REMOVE ALL TRASH AND OTHER DEBRIS FROM THE POOL AREAS.
7. INSPECT EXCELSIOR MATTING AT LEAST WEEKLY AND AFTER EACH SIGNIFICANT (1/2 INCH OR GREATER) RAINFALL EVENT REPAIR IMMEDIATELY. GOOD CONTACT WITH THE GROUND MUST BE MAINTAINED, AND EROSION MUST NOT OCCUR BENEATH THE MATTING. ANY AREAS OF THE MATTING THAT ARE DAMAGED OR NOT IN CLOSE CONTACT WITH THE GROUND SHALL BE REPAIRED AND STAPLED. IF EROSION OCCURS DUE TO POORLY CONTROLLED DRAINAGE, THE PROBLEM SHALL BE FIXED AND THE ERODED AREA PROTECTED. MONITOR AND REPAIR THE MATTING AS NECESSARY UNTIL GROUND COVER IS ESTABLISHED.

STABILIZATION NOTES

1. ALL DISTURBED AREAS WILL BE STABILIZED WITHIN 15 WORKING DAYS OF CEASE OF ANY PHASE OF ACTIVITY AND SLOPES WITHIN 21 CALENDAR DAYS.

PERMANENT SEEDING SCHEDULE – MIXTURE 5CP

SPECIES	RATE (LB/ACRE)
CENTIPEDE GRASS	10-20

Seeding Dates
MARCH - JUNE

Soil Amendments
APPLY LIME AND FERTILIZER ACCORDING TO SOIL TESTS, OR APPLY 300 LB/ACRE 10-10-10 FERTILIZER.

Mulch
DO NOT MULCH.

Maintenance
FERTILIZE VERY SPARINGLY LB/ACRE NITROGEN IN SPRING WITH NO PHOSPHORUS. CENTIPEDE GRASS CANNOT TOLERATE HIGH PH OR EXCESS FERTILIZER.

TEMPORARY SEEDING-LATE WINTER/EARLY SPRING

WINTER AND EARLY SPRING

SPECIES	RATE (LB/ACRE)
Rye (GRAIN)	120
*ANNUAL LESPEDEZA (KOBE IN PIEDMONT AND COASTAL PLAIN, KOREAN IN MOUNTAINS)	50

*OMIT ANNUAL LESPEDEZA WHEN DURATION OF TEMPORARY COVER IS NOT TO EXTEND BEYOND JUNE.

SUMMER

SPECIES	RATE (LB/ACRE)
GERMAN MILLET	40

FALL

SPECIES	RATE (LB/ACRE)
RYE (GRAIN)	120

Seeding dates
COASTAL PLAIN – DEC.1–APR. 15 – LATE WINTER AND EARLY SPRING
APRIL 15 – AUG. 15 – SUMMER
AUG. 15 – DEC. 30 – FALL

Soil amendments
FOLLOW RECOMMENDATIONS OF SOIL TESTS OR APPLY 2,000 LB/ACRE GROUND AGRICULTURAL LIMESTONE AND 750 LB/ACRE 10-10-10 FERTILIZER.

Mulch
APPLY 4,000 LB/ACRE STRAW. ANCHOR STRAW BY TACKING WITH ASPHALT, NETTING OR A MULCH ANCHORING TOOL. A DISK WITH BLADES SET NEARLY STRAIGHT CAN BE USED AS A MULCH ANCHORING TOOL.

Maintenance
REFERTILIZE IF GROWTH IS NOT FULLY ADEQUATE. RESEED, REFERTILIZE AND MULCH IMMEDIATELY FOLLOWING EROSION OR OTHER DAMAGE.

GENERAL GRADING NOTES

1. REASONABLE CARE HAS BEEN EXERCISED IN SHOWING THE LOCATION OF EXISTING UTILITIES ON THE PLANS. THE EXACT LOCATION OF SUCH UTILITIES IS NOT KNOWN IN ALL CASES. THE CONTRACTOR SHALL EXPLORE THE AREA AHEAD OF THE DITCHING OPERATION BY OBSERVATIONS, ELECTRONIC DEVICES, HAND DIGGING AND BY PERSONAL CONTACT WITH THE UTILITY COMPANIES IN ORDER TO LOCATE EXISTING UTILITIES IN ADVANCE OF THE TRENCHING OPERATIONS SO AS TO AVOID AND PREVENT DAMAGE TO THE EXISTING UTILITIES. CONTRACTOR SHALL BE RESPONSIBLE FOR ALL COST RESULTING FROM ANY DAMAGE TO THE EXISTING UTILITY LINES INCLUDING BUT NOT LIMITED TO REPAIRS AND LOSS SERVICE REVENUE. CONTRACTOR SHALL ARRANGE FOR TEMPORARY SUPPORT OF EXISTING UTILITIES, SUCH AS POLES, CONDUITS, FIBER OPTIC CABLES, TELEPHONE CABLES, WATER LINES, ETC...
2. CONTRACTOR SHALL COMPLY WITH THE LATEST REVISIONS AND INTERPRETATIONS OF THE DEPARTMENT OF LABOR SAFETY AND HEALTH REGULATIONS FOR CONSTRUCTION PROMULGATED UNDER THE OCCUPATIONAL SAFETY AND HEALTH ACT.
3. CONTRACTOR SHALL PLAN AND CONSTRUCT WORK SO AS TO CAUSE MINIMUM INCONVENIENCE TO THE OWNER AND THE PUBLIC. THE CONTRACTOR SHALL PROVIDE, ERECT AND MAINTAIN AT ALL TIMES DURING THE PROGRESS OR TEMPORARY SUSPENSION OF WORK, SUITABLE BARRIERS, FENCES, SIGNS OR OTHER ADEQUATE PROTECTION, INCLUDING FLAG MEN AND WATCHMEN AS NECESSARY TO INSURE THE SAFETY OF THE PUBLIC AS WELL AS THOSE ENGAGED IN THE CONSTRUCTION WORK. CONSTRUCTION SIGNING SHALL BE IN ACCORDANCE WITH THE LATEST EDITION OF "CONSTRUCTION AND MAINTENANCE OPERATIONS SUPPLEMENT TO THE MANUAL ON UNIFORM TRAFFIC CONTROL DEVICES" BY THE NCDOT.
4. ALL MATERIAL CLEARED AND GRUBBED BY THE CONTRACTOR IN ORDER TO CONSTRUCT THE WORK, SUCH AS TREES, VEGETATION, FENCING, ETC... SHALL BECOME THE PROPERTY OF THE CONTRACTOR AND SHALL BE PROPERLY DISPOSED OF OFF-SITE OR BURNED IF PROPER PERMITS ARE RECEIVED.

SITE NOTES

1. ANY DISCREPANCY IN THIS PLAN AND ACTUAL FIELD CONDITIONS SHALL BE REPORTED TO THE OWNER PRIOR TO START OF CONSTRUCTION. GENERAL CONTRACTOR SHALL BE RESPONSIBLE FOR VERIFICATION OF ALL SETBACKS, EASEMENTS AND DIMENSIONS SHOWN HEREON BEFORE BEGINNING CONSTRUCTION.
2. THE GENERAL CONTRACTOR SHALL CONTACT ALL OWNERS OF EASEMENTS, UTILITIES AND R.O.W."S PUBLIC OR PRIVATE, PRIOR TO WORKING IN THESE AREAS.
3. CONTRACTOR SHALL MAINTAIN THE SITE IN A MANNER SO THAT WORKMEN AND PUBLIC SHALL BE PROTECTED FROM INJURY, AND ADJOINING PROPERTY PROTECTED FROM DAMAGE.
4. ACCESS TO UTILITIES, FIRE HYDRANTS, STREET LIGHTING, ETC., SHALL REMAIN UNDISTURBED, UNLESS COORDINATED WITH THE RESPECTIVE UTILITY.
5. DO NOT SCALE THIS DRAWING AS IT IS A REPRODUCTION AND SUBJECT TO DISTORTION.
6. THE GENERAL CONTRACTOR SHALL REMOVE ALL DEBRIS FROM THE SITE UPON COMPLETION OF THE PROJECT AND AT LEAST ONCE A WEEK DURING CONSTRUCTION.
7. THE GENERAL CONTRACTOR SHALL KEEP THE AREA OUTSIDE THE "CONSTRUCTION LIMITS" BROOM CLEAN AT ALL TIMES.
8. CONTRACTOR SHALL MAINTAIN AN "AS-BUILT" SET OF DRAWINGS TO RECORD THE EXACT LOCATION OF ALL PIPING PRIOR TO CONCEALMENT. DRAWINGS SHALL BE GIVEN TO THE OWNER UPON COMPLETION OF THE PROJECT WITH A COPY OF THE TRANSMITTAL LETTER TO THE ENGINEER.
9. IF DEPARTURES FROM THE SPECIFICATIONS OR DRAWINGS ARE DEEMED NECESSARY BY THE CONTRACTOR, DETAILS OF SUCH DEPARTURES AND REASONS THEREOF SHALL BE GIVEN TO THE OWNER FOR REVIEW. NO DEPARTURES FROM THE CONTRACT DOCUMENT SHALL BE MADE WITHOUT THE PERMISSION OF THE OWNER.
10. CONTRACTOR SHALL VERIFY LOCATION AND ELEVATION OF ALL UNDERGROUND UTILITIES. THE LOCATION OF ALL EXISTING UTILITIES ARE NOT NECESSARILY SHOWN ON PLANS AND WHERE SHOWN ARE ONLY APPROXIMATE. THE CONTRACTOR SHALL ON HIS INITIATIVE AND AT NO EXTRA COST HAVE LOCATED ALL UNDERGROUND LINES AND STRUCTURES AS NECESSARY. NO CLAIMS FOR DAMAGES OR EXTRA COMPENSATION SHALL ACCRUE TO THE CONTRACTOR FROM THE PRESENCE OF SUCH PIPE OTHER OBSTRUCTIONS OR FROM DELAY DUE TO REMOVAL OR REARRANGEMENT OF THE SAME. THE CONTRACTOR SHALL BE RESPONSIBLE FOR ANY DAMAGE TO UNDERGROUND STRUCTURES. CONTACT NORTH CAROLINA ONE CALL" TOLL FREE 1-800-632-4949 AT LEAST 48 HOURS PRIOR TO CONSTRUCTION. THE CONTRACTOR IS RESPONSIBLE FOR CONTACTING ALL NONSUBSCRIBING UTILITIES.
11. ALL PERMITS RELATIVE TO PROJECT MUST BE OBTAINED, PRIOR TO CONSTRUCTION
12. ALL CONSTRUCTION TO BE IN ACCORDANCE WITH PERMITS ISSUED AND APPLICABLE STATE, COUNTY, AND LOCAL CODES.
13. FOR BUILDING DIMENSIONS, SEE ARCHITECTURAL DRAWINGS.
14. ALL DIMENSIONS AND RADII ARE TO OUTSIDE FACE OF BUILDING OR TO FACE OF CURB UNLESS OTHERWISE NOTED.
15. THE CONTRACTOR SHALL OBTAIN AND PAY FOR ALL INSPECTIONS, CERTIFICATIONS, EQUIPMENT, ETC., THAT MAY BE REQUIRED.
16. THE ENGINEER AND/OR OWNER DISCLAIM ANY ROLE IN THE CONSTRUCTION MEANS AND METHODS ASSOCIATED WITH THE PROJECT AS SET FORTH IN THESE PLANS.

GENERAL STORM SEWER NOTES

1. ALL STORM SEWERS SHALL BE CONSTRUCTED IN ACCORDANCE WITH THE CITY OF WILMINGTON AND THE STATE OF NORTH CAROLINA REQUIREMENTS AS SPECIFIED ON THE DRAWINGS AND IN THE PROJECT SPECIFICATIONS.
2. BEDDING FOR ALL STORM SEWER PIPE SHALL BE AS SPECIFIED ON THE DRAWINGS, PROJECT SPECIFICATIONS, AND MANUFACTURER SPECIFICATIONS.
3. ALL STORM SEWER PIPES TO BE HDPE ADS N-12 OR EQUIVALENT, UNLESS OTHERWISE SPECIFIED.
4. ALL STORM SEWER PIPES SHOWN AS RCP ON THE PLANS SHALL BE REINFORCED CONCRETE PIPE CONFORMING TO ASTM C-76, UNLESS INDICATED OTHERWISE ON PLANS.

GROUND STABILIZATION		
SITE AREA DESCRIPTION	STABILIZATION TIME FRAME	STABILIZATION TIME FRAME EXCEPTIONS
PERIMETER DIKES, SWALES, DITCHES AND SLOPES	7 DAYS	NONE
HIGH QUALITY WATER (HQW) ZONES	7 DAYS	NONE
SLOPES STEEPER THAN 3:1	7 DAYS	IF SLOPES ARE 10' OR LESS IN LENGTH AND ARE NOT STEEPER THAN 2:1, 14 DAYS ARE ALLOWED.
SLOPES 3:1 OR FLATTER	14 DAYS	7-DAYS FOR SLOPES GREATER THAN 50 FEET IN LENGTH
ALL OTHER AREAS WITH SLOPES FLATTER THAN 4:1	14 DAYS	NONE (EXCEPT FOR PERIMETERS AND HQW ZONES)

EXISTING UTILITY NOTES

1. IT IS THE RESPONSIBILITY OF THE GENERAL CONTRACTOR TO VERIFY THE ACTUAL LOCATION AND AVAILABILITY OF ALL EXISTING AND PROPOSED UTILITIES IN THE FIELD PRIOR TO GROUND BREAKING.
2. EXISTING UTILITIES AND STRUCTURES SHOWN, BOTH UNDERGROUND AND ABOVE GROUND, ARE BASED ON A FIELD SURVEY AND THE BEST AVAILABLE RECORD DRAWINGS. THE CONTRACTOR SHALL FIELD VERIFY FIELD CONDITIONS PRIOR TO BEGINNING RELATED CONSTRUCTION. ANY DISCREPANCIES SHALL BE REPORTED TO THE OWNER'S REPRESENTATIVE IMMEDIATELY.

UTILITY CONTACTS:

1. CONTACT THE NORTH CAROLINA ONE CALL CENTER PRIOR TO DOING AND DIGGING. 1-800-632-4949

NOTICE REQUIRED

ALL EXISTING UNDERGROUND UTILITIES SHALL BE PHYSICALLY LOCATED BY CONTRACTOR PRIOR TO THE BEGINNING OF ANY CONSTRUCTION IN THE VICINITY OF SAID UTILITIES.

CONTRACTORS SHALL NOTIFY OPERATORS WHO MAINTAIN UNDERGROUND UTILITY LINES IN THE AREA OF PROPOSED EXCAVATION AT LEAST TWO WORKING DAYS, BUT NOT MORE THAN TEN WORKING DAYS PRIOR TO ANY EXCAVATION OR DEMOLITION.

CONTACT "CAROLINA ONE CALL" AT
1-800-632-4949

EMERGENCY DIAL 911 POLICE - FIRE - RESCUE

Approved Construction Plan

	Name	Date
Planning		
Traffic		
Fire		

For each open utility cut of City streets, a $325 permit shall be required from the City prior to occupancy and/or project acceptance.

CITY OF WILMINGTON NORTH CAROLINA
Public Services • Engineering Division
APPROVED STORMWATER MANAGEMENT PLAN
Date:_____ Permit #_____
Signed: _____

NORTH CAROLINA PROFESSIONAL SEAL 031315 ENGINEER GARRY S. PAGE
06/12/2014

No.	Revision	Date	By

Designer GSP	Scale
Drawn By GSP	Date JUNE 2014
License # P-0718	Job No. 2014-0001

ELLINGTON FARMS

Wilmington New Hanover County North Carolina

GENERAL NOTES

PREPARED FOR:
ELLINGTON FARMS APARTMENTS, LLC
6626-C GORDON ROAD
WILMINGTON, NC 28411
910-799-3006

GSP CONSULTING, PLLC
ENGINEERING
6626 Gordon Road Unit C Wilmington, North Carolina 28411 tel: 910-442-7870 fax: 910-799-6659

Sheet No.
C-1

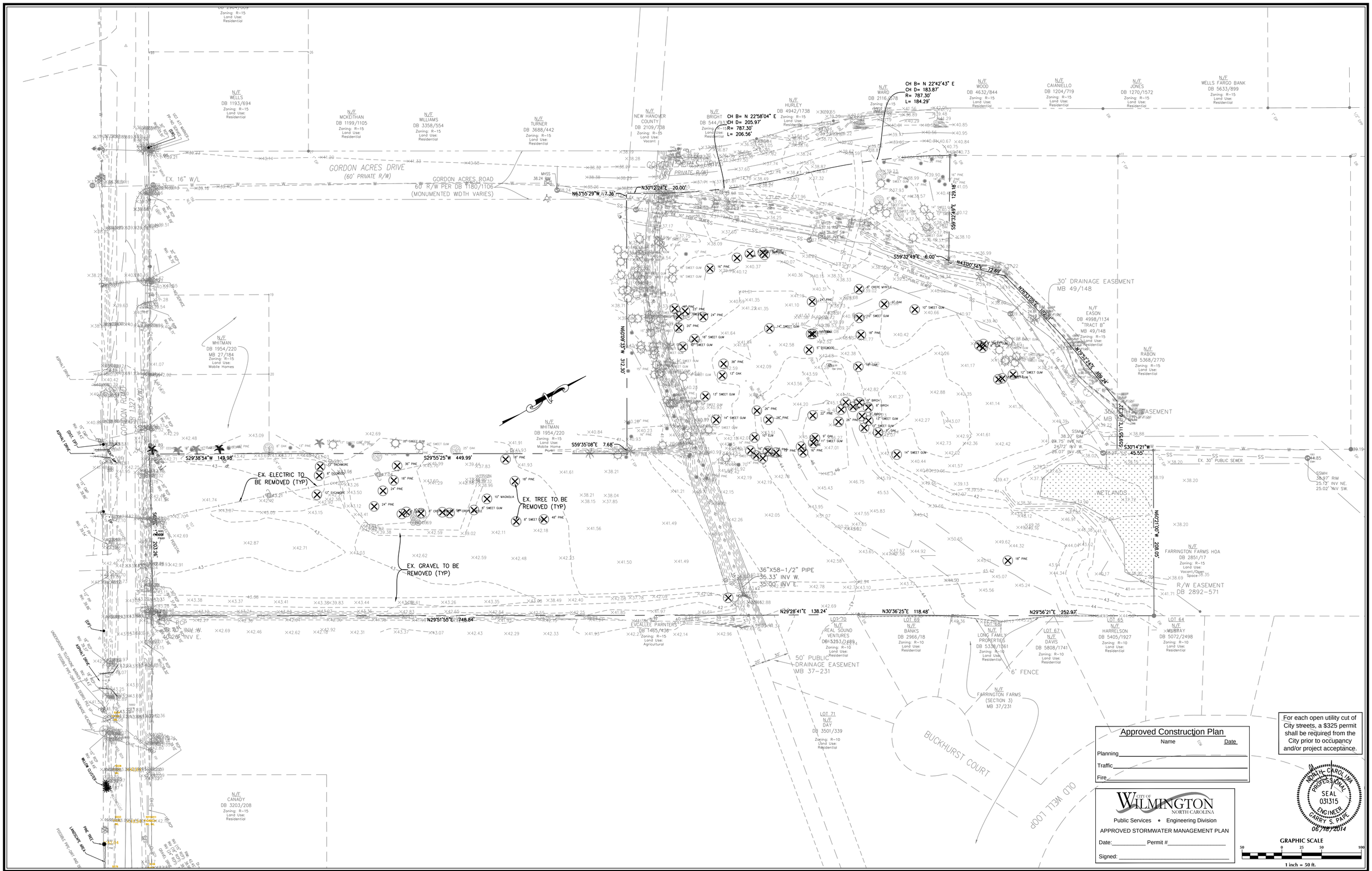

No.	Revision	Date	By

Designer GSP	Scale 1" = 50'
Drawn By GSP	Date JUNE 2014
License # P-0718	Job No. 2014-0001

ELLINGTON FARMS

Wilmington New Hanover County North Carolina

EXISTING CONDITIONS

PREPARED FOR:
ELLINGTON FARMS APARTMENTS, LLC
6626-C GORDON ROAD
WILMINGTON, NC 28411
910-799-3006

GSP CONSULTING, PLLC
ENGINEERING
6626 Gordon Road Unit C Wilmington, North Carolina 28411 tel: 910-442-7870 fax: 910-799-6659

Sheet No.
C-2

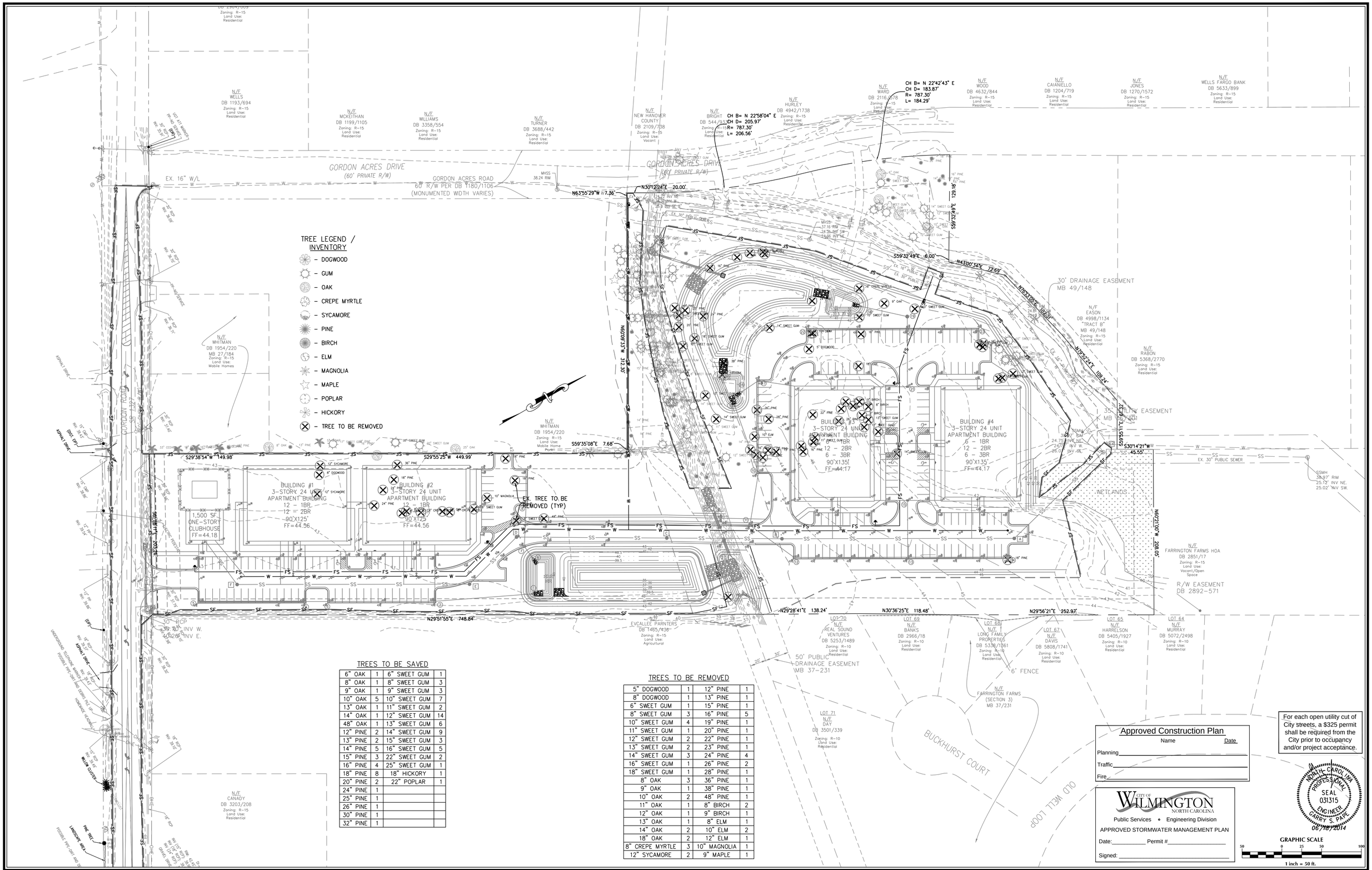

TREES TO BE SAVED

6" OAK	1	6" SWEET GUM	1
8" OAK	1	8" SWEET GUM	3
9" OAK	1	9" SWEET GUM	3
10" OAK	5	10" SWEET GUM	7
13" OAK	1	11" SWEET GUM	2
14" OAK	1	12" SWEET GUM	14
48" OAK	1	13" SWEET GUM	6
12" PINE	2	14" SWEET GUM	9
13" PINE	2	15" SWEET GUM	3
14" PINE	5	16" SWEET GUM	5
15" PINE	3	22" SWEET GUM	2
16" PINE	4	25" SWEET GUM	1
18" PINE	8	18" HICKORY	1
20" PINE	2	22" POPLAR	1
24" PINE	1		
25" PINE	1		
26" PINE	1		
30" PINE	1		
32" PINE	1		

TREES TO BE REMOVED

5" DOGWOOD	1	12" PINE	1
8" DOGWOOD	1	13" PINE	1
6" SWEET GUM	1	15" PINE	1
8" SWEET GUM	3	16" PINE	5
10" SWEET GUM	4	19" PINE	1
11" SWEET GUM	1	20" PINE	1
12" SWEET GUM	2	22" PINE	1
13" SWEET GUM	2	23" PINE	1
14" SWEET GUM	3	24" PINE	4
16" SWEET GUM	1	26" PINE	2
18" SWEET GUM	1	28" PINE	1
8" OAK	3	36" PINE	1
9" OAK	1	38" PINE	1
10" OAK	2	48" PINE	1
11" OAK	1	8" BIRCH	2
12" OAK	1	9" BIRCH	1
13" OAK	1	8" ELM	1
14" OAK	2	10" ELM	2
18" OAK	2	12" ELM	1
8" CREPE MYRTLE	3	10" MAGNOLIA	1
12" SYCAMORE	2	9" MAPLE	1

For each open utility cut of City streets, a $325 permit shall be required from the City prior to occupancy and/or project acceptance.

Approved Construction Plan

	Name	Date
Planning		
Traffic		
Fire		

CITY OF WILMINGTON NORTH CAROLINA
Public Services • Engineering Division
APPROVED STORMWATER MANAGEMENT PLAN
Date:_____ Permit #_____
Signed: _____

NORTH CAROLINA PROFESSIONAL SEAL 031315 ENGINEER CARRY S. PAPE
06/18/2014

GRAPHIC SCALE
50 0 25 50 100
1 inch = 50 ft.

No.	Revision	Date	By

Designer GSP	Scale 1" = 50'
Drawn By GSP	Date JUNE 2014
License # P-0718	Job No. 2014-0001

ELLINGTON FARMS

Wilmington New Hanover County North Carolina

SITE INVENTORY PLAN

PREPARED FOR:
ELLINGTON FARMS APARTMENTS, LLC
6626-C GORDON ROAD
WILMINGTON, NC 28411
910-799-3006

GSP CONSULTING, PLLC
ENGINEERING
6626 Gordon Road Unit C Wilmington, North Carolina 28411 tel: 910-442-7870 fax: 910-799-6659

Sheet No. C-2.1

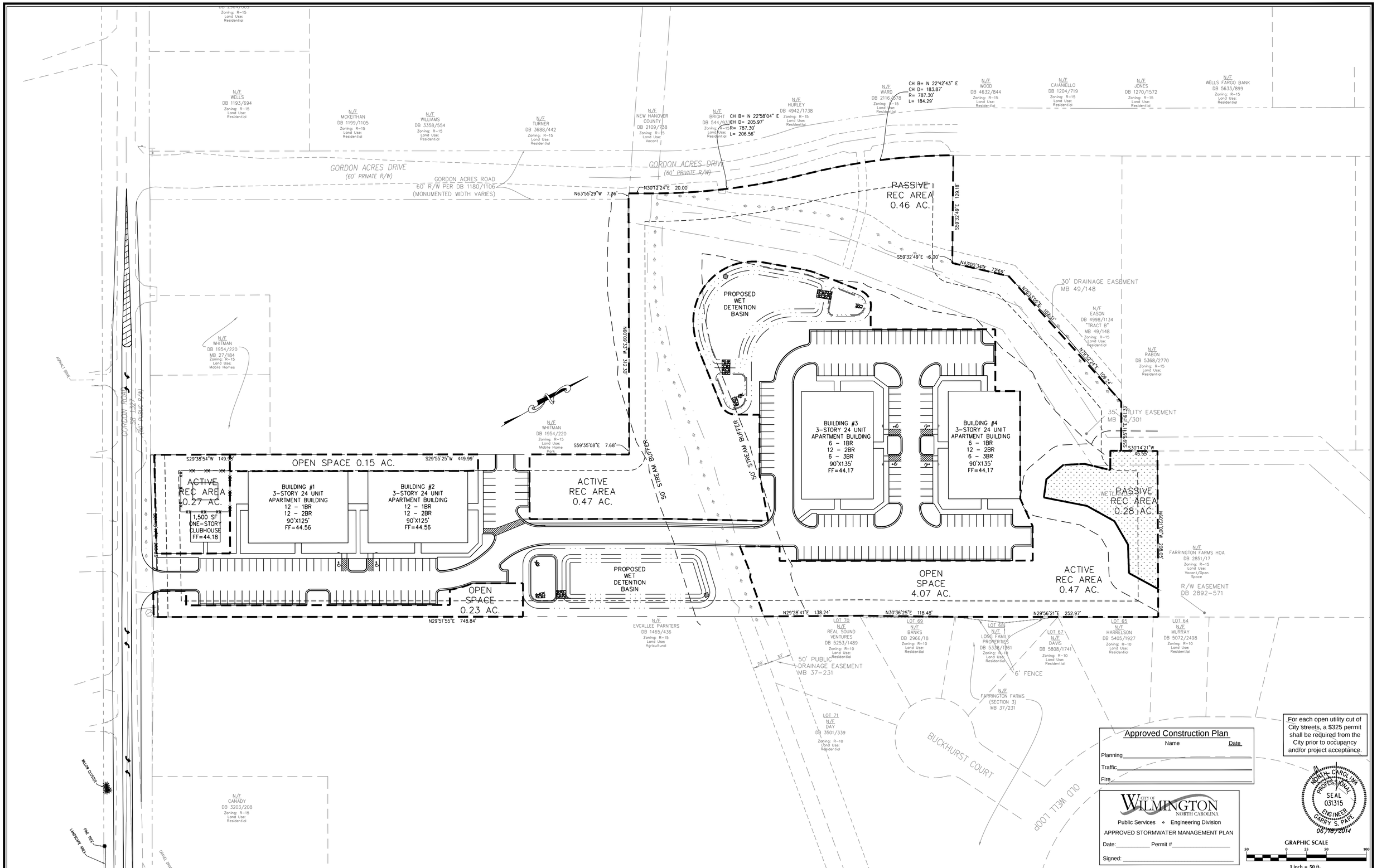

Approved Construction Plan

	Name	Date
Planning		
Traffic		
Fire		

For each open utility cut of City streets, a $325 permit shall be required from the City prior to occupancy and/or project acceptance.

CITY OF WILMINGTON NORTH CAROLINA
Public Services • Engineering Division
APPROVED STORMWATER MANAGEMENT PLAN
Date:_____ Permit #_____
Signed: _____

NORTH CAROLINA PROFESSIONAL SEAL 031315 ENGINEER CARRY S. PATE 06/18/2014

GRAPHIC SCALE
50 0 25 50 100
1 inch = 50 ft.

No.	Revision	Date	By

Designer GSP	Scale 1" = 50'
Drawn By GSP	Date JUNE 2014
License # P-0718	Job No. 2014-0001

ELLINGTON FARMS

Wilmington New Hanover County North Carolina

OVERALL SITE PLAN

PREPARED FOR:
ELLINGTON FARMS APARTMENTS, LLC
6626-C GORDON ROAD
WILMINGTON, NC 28411
910-799-3006

GSP CONSULTING, PLLC
ENGINEERING
6626 Gordon Road Unit C Wilmington, North Carolina 28411 tel: 910-442-7870 fax: 910-799-6659

Sheet No.
C-3.1

GORDON ACRES DRIVE
(60' PRIVATE R/W)

GORDON ACRES ROAD
60' R/W PER DB 1180/1106
(MONUMENTED WIDTH VARIES)

N63°55'29"W 7.86'

N30°12'24"E 20.00'

(60' PRIVATE R/W)

S59°32'49

GORDON ROAD
SR 1327
(60' PUBLIC R/W)

N/F
WHITMAN
DB 1954/220
MB 27/184
Zoning: R-15
Land Use:
Mobile Homes

N60°09'33"W 312.30'

N/F
WHITMAN
DB 1954/220
Zoning: R-15
Land Use:
Mobile Home
Park

STUB ROAD
FOR FUTURE
EXTENSION

S59°35'08"E 7.68'

S29°38'54"W 149.98'

S29°55'25"W 449.99'

20' SIDE YARD SETBACK

BUILDING #1
3-STORY 24 UNIT
APARTMENT BUILDING
12 - 1BR
12 - 2BR
90'X125'
FF=44.56

BUILDING #2
3-STORY 24 UNIT
APARTMENT BUILDING
12 - 1BR
12 - 2BR
90'X125'
FF=44.56

1,500 SF
ONE-STORY
CLUBHOUSE
FF=44.18

18' STREETYARD

FRONT YARD SETBACK

S59°18'11"E 229.09'

5' SIDEWALK

6.5' SIDEWALK

8' S/W

HC SIGN

HC RAMP

5' STRIPED WALKWAY

DUMPSTER
PAD &
RECYCLING
ENCLOSURE

PROPOSED WET
DETENTION BASIN

50' STREAM BUFFER

BUILDING #3
3-STORY 24 UNIT
APARTMENT BUILDING
6 - 1BR
12 - 2BR
6 - 3BR
90'X135'
FF=44.17

N29°51'55"E 748.84'

N29°28'41"E 138.24'

N30°36'25"E

N/F
EVCALLEE PARNTERS
DB 1465/436
Zoning: R-15
Land Use:
Agricultural

LOT 70
N/F
REAL SOUND
VENTURES
DB 5253/1489
Zoning: R-10
Land Use:
Residential

50' PUBLIC
DRAINAGE EASEMENT
MB 37-231

GRAPHIC SCALE
1 inch = 30 ft.

CITY OF WILMINGTON NORTH CAROLINA
Public Services • Engineering Division
APPROVED STORMWATER MANAGEMENT PLAN
Date:_____ Permit #_____
Signed: _____

Approved Construction Plan
Name Date
Planning_____
Traffic_____
Fire_____

For each open utility cut of City streets, a $325 permit shall be required from the City prior to occupancy and/or project acceptance.

MIN 8.5' X 15.5' PARKING SPACES | 24' DRIVE AISLE | MIN 8.5' X 15.5' PARKING SPACES
6.5' | 6.5'-4" CONC. SIDEWALK | 1 1/2" ASPHALT 6" ABC | 6.5'-4" CONC. SIDEWALK | 6.5'

Typical X-Section at Parking Area
NTS

NORTH CAROLINA PROFESSIONAL SEAL 031315 ENGINEER GARRY S. PAPE
06/18/2014

No.	Revision	Date	By

Designer GSP	Scale 1" = 30'
Drawn By GSP	Date JUNE 2014
License # P-0718	Job No. 2014-0001

ELLINGTON FARMS

Wilmington New Hanover County North Carolina

SITE PLAN

PREPARED FOR:
ELLINGTON FARMS APARTMENTS, LLC
6626-C GORDON ROAD
WILMINGTON, NC 28411
910-799-3006

GSP CONSULTING, PLLC
ENGINEERING
6626 Gordon Road Unit C Wilmington, North Carolina 28411 tel: 910-442-7870 fax: 910-799-6659

Sheet No.
C-3.2

GORDON ACRES DRIVE
(60' PRIVATE R/W)

N30°12'24"E 20.00'

S59°32'49"E 129.18'

S59°32'49"E 6.00'

N43°00'34"E 72.69'

N76°13'05"E 102.31'

N79°52'24"E 109.24'

30' DRAINAGE EASEMENT
MB 49/148

N/F
EASON
DB 4998/1134
"TRACT B"
MB 49/148
Zoning: R-15
Land Use:
Residential

N/F
RABON
DB 5368/2770
Zoning: R-15
Land Use:
Residential

35' UTILITY EASEMENT
MB 50/301

S59°55'11"E 61.32'

S30°14'21"W
45.55'

126'

N60°09'33"W 312.30'

N60°21'00"W 208.05'

50' STREAM BUFFER

25' REAR YARD SETBACK

PROPOSED WET
DETENTION BASIN

176'

265'

185'

53'

165'

50'

170'

49'R

5'R

25'R

24'

9.0'

18.0'

15.5'

6.5' SIDEWALK

5' S/W

8' S/W

BUILDING #3
3-STORY 24 UNIT
APARTMENT BUILDING
6 - 1BR
12 - 2BR
6 - 3BR
90'X135'
FF=44.17

BUILDING #4
3-STORY 24 UNIT
APARTMENT BUILDING
6 - 1BR
12 - 2BR
6 - 3BR
90'X135'
FF=44.17

HC SIGN
HC RAMP

8'0'8.0'

216'

126'

5' SIDEWALK

WETLANDS

N/F
FARRINGTON FARMS HOA
DB 2851/17
Zoning: R-15
Land Use:
Vacant/Open
Space

R/W EASEMENT
DB 2892-571

PROPOSED WET
DETENTION BASIN

215'

214'

69'

146'

71'

20' SIDE YARD SETBACK

N29°28'41"E 138.24'

N30°36'25"E 118.48'

N29°56'21"E 252.97'

N/F
EVCALLEE PARNTERS
DB 1465/436
Zoning: R-15
Land Use:
Agricultural

LOT 70
N/F
REAL SOUND
VENTURES
DB 5253/1489
Zoning: R-10
Land Use:
Residential

LOT 69
N/F
BANKS
DB 2966/18
Zoning: R-10
Land Use:
Residential

LOT 68
N/F
LONG FAMILY
PRORERTIES
DB 5338/1361
Zoning: R-10
Land Use:
Residential

LOT 67
N/F
DAVIS
DB 5808/1741
Zoning: R-10
Land Use:
Residential

LOT 65
N/F
HARRELSON
DB 5405/1927
Zoning: R-10
Land Use:
Residential

LOT 64
N/F
MURRAY
DB 5072/2498
Zoning: R-10
Land Use:
Residential

50' PUBLIC
DRAINAGE EASEMENT

20'

30'

Approved Construction Plan

	Name	Date
Planning		
Traffic		
Fire		

For each open utility cut of City streets, a $325 permit shall be required from the City prior to occupancy and/or project acceptance.

CITY OF WILMINGTON NORTH CAROLINA
Public Services • Engineering Division
APPROVED STORMWATER MANAGEMENT PLAN
Date:_____ Permit #_____
Signed: _____

NORTH CAROLINA PROFESSIONAL SEAL 031315 ENGINEER GARRY S. PAPE 06/18/2014

GRAPHIC SCALE
30 0 15 30 60
1 inch = 30 ft.

No.	Revision	Date	By

Designer GSP	Scale 1" = 30'
Drawn By GSP	Date JUNE 2014
License # P-0718	Job No. 2014-0001

ELLINGTON FARMS

Wilmington New Hanover County North Carolina

SITE PLAN

PREPARED FOR:
ELLINGTON FARMS APARTMENTS, LLC
6626-C GORDON ROAD
WILMINGTON, NC 28411
910-799-3006

GSP CONSULTING, PLLC
ENGINEERING
6626 Gordon Road Unit C Wilmington, North Carolina 28411 tel: 910-442-7870 fax: 910-799-6659

Sheet No.
C-3.3

FIRE DEPARTMENT NOTES:

1. HYDRANT MUST BE WITHIN 150' OF THE FDC.
2. THE FDC MUST BE WITHIN 40' OF FIRE APPARATUS PLACEMENT.
3. LANDSCAPING OR PARKING CANNOT BLOCK OR IMPEDE THE FDC OR FIRE HYDRANTS. A 3-FOOT CLEAR SPACE SHALL BE MAINTAINED AROUND THE CIRCUMFERENCE OF THE HYDRANT AND FDC.
4. HYDRANTS MUST BE LOCATED WITHIN 8' OF THE CURB.
5. NEW HYDRANTS MUST BE AVAILABLE FOR USE PRIOR TO CONSTRUCTION OF THE BUILDING(S).
6. CONTRACTOR SHALL MAINTAIN AN ALL WEATHER ACCESS FOR EMERGENCY VEHICLES AT ALL TIMES DURING CONSTRUCTION.
7. UNDERGROUND FIRE LINE AND PRIVATE WATER MAINS MUST BE PERMITTED AND INSPECTED BY THE WILMINGTON FIRE DEPARTMENT FROM THE PRIVATE RIGHT-OF-WAY TO THE BUILDING. CONTACT THE WILMINGTON FIRE DEPARTMENT DIVISION OF FIRE AND LIFE SAFETY AT 910-343-0696 FOR ADDITIONAL INFORMATION.

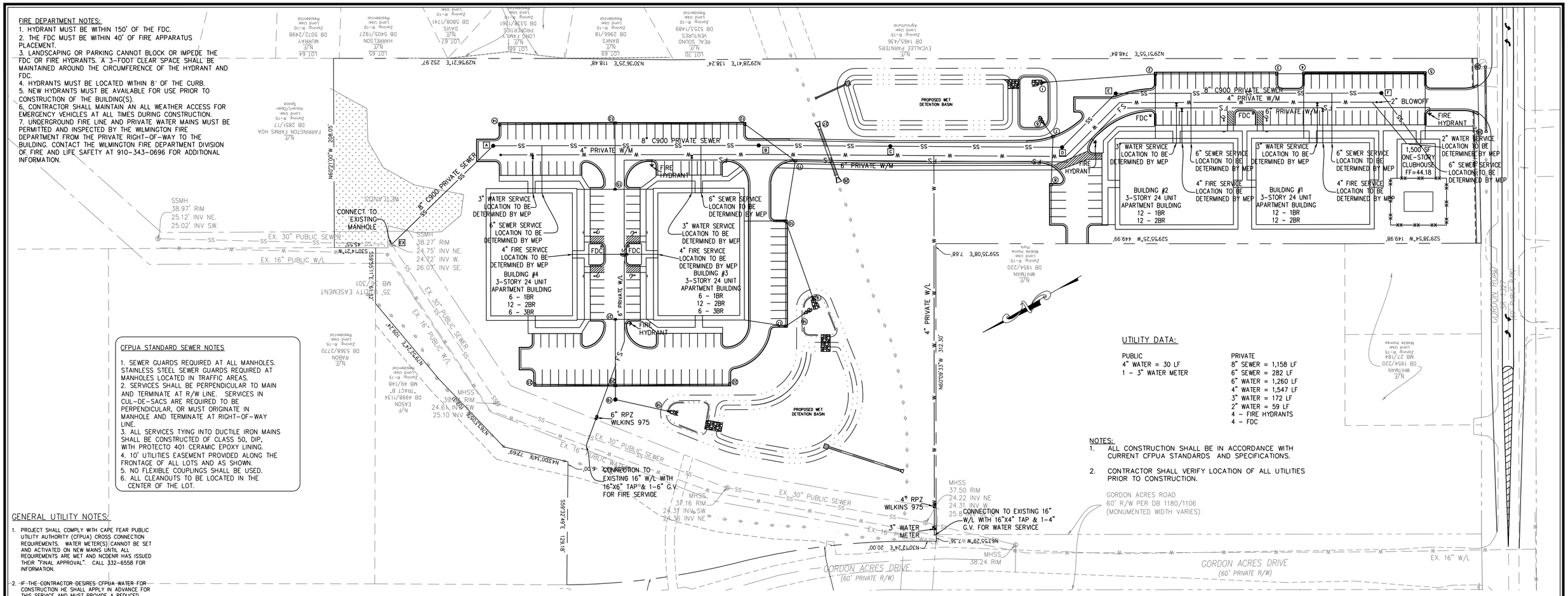

CFPUA STANDARD SEWER NOTES

1. SEWER GUARDS REQUIRED AT ALL MANHOLES. STAINLESS STEEL SEWER GUARDS REQUIRED AT MANHOLES LOCATED IN TRAFFIC AREAS.
2. SERVICES SHALL BE PERPENDICULAR TO MAIN AND TERMINATE AT R/W LINE. SERVICES IN CUL-DE-SACS ARE REQUIRED TO BE PERPENDICULAR, OR MUST ORIGINATE IN MANHOLE AND TERMINATE AT RIGHT-OF-WAY LINE.
3. ALL SERVICES TYING INTO DUCTILE IRON MAINS SHALL BE CONSTRUCTED OF CLASS 50, DIP, WITH PROTECTO 401 CERAMIC EPOXY LINING.
4. 10' UTILITIES EASEMENT PROVIDED ALONG THE FRONTAGE OF ALL LOTS AND AS SHOWN.
5. NO FLEXIBLE COUPLINGS SHALL BE USED.
6. ALL CLEANOUTS TO BE LOCATED IN THE CENTER OF THE LOT.

UTILITY DATA:

PUBLIC
4" WATER = 30 LF
1 - 3" WATER METER

PRIVATE
8" SEWER = 1,158 LF
6" SEWER = 282 LF
6" WATER = 1,260 LF
4" WATER = 1,547 LF
3" WATER = 172 LF
2" WATER = 59 LF
4 - FIRE HYDRANTS
4 - FDC

NOTES:

1. ALL CONSTRUCTION SHALL BE IN ACCORDANCE WITH CURRENT CFPUA STANDARDS AND SPECIFICATIONS.
2. CONTRACTOR SHALL VERIFY LOCATION OF ALL UTILITIES PRIOR TO CONSTRUCTION.

GENERAL UTILITY NOTES:

1. PROJECT SHALL COMPLY WITH CAPE FEAR PUBLIC UTILITY AUTHORITY (CFPUA) CROSS CONNECTION REQUIREMENTS. WATER METER(S) CANNOT BE SET AND ACTIVATED ON NEW MAINS UNTIL ALL REQUIREMENTS ARE MET AND NCDENR HAS ISSUED THEIR "FINAL APPROVAL". CALL 332-6558 FOR INFORMATION.
2. IF THE CONTRACTOR DESIRES CFPUA WATER FOR CONSTRUCTION HE SHALL APPLY IN ADVANCE FOR THIS SERVICE AND MUST PROVIDE A REDUCED PRESSURE ZONE (RPZ) BACKFLOW PREVENTION DEVICE ON THE DEVELOPER'S SIDE OF THE WATER METER BOX.
3. TO USE CFPUA WATER FOR IRRIGATION IT MUST BE METERED SEPARATELY.
4. WHEN PVC WATER MAINS AND/OR POLYETHYLENE SERVICES ARE PROPOSED, THE PIPES ARE TO BE MARKED WITH NO. 10 INSULATED COPPER WIRE INSTALLED THE ENTIRE LENGTH AND STRAPPED TO THE PIPES WITH DUCT TAPE. THE INSULATED WIRE IS TO BE STRIPPED TO BARE WIRE AND SECURED TO ALL VALVES AND FITTINGS. THIS WIRE IS TO BE ACCESSIBLE AT ALL VALVES, FIRE HYDRANTS, AND WATER METER BOXES TO AID IN FUTURE LOCATIONS OF FACILITIES.
5. TREES ARE NOT TO BE PLANTED OVER WATER MAINS OR WITHIN UTILITY EASEMENTS.
6. STATE WATER AND SEWER PERMITS SHALL BE OBTAINED PRIOR TO RELEASE OF THE PROJECT FOR CONSTRUCTION.
7. ALL WATERMAINS WITHIN PUBLIC RIGHT OF WAY TO BE PUBLIC AND ALL WATERMAINS LOCATED ON PRIVATE PROPERTY TO BE PRIVATE.
8. POOL IS NOT TO DISCHARGE INTO THE CFPUA SEWER SYSTEM. CFPUA WILL CONSIDER THIS DISCHARGE ONLY IF FLOW IS DENIED INTO THE STORM DRAIN SYSTEM.
9. GATE VALVES TO BE LOCATED AT EACH DOMESTIC SERVICE LINE INTO BUILDINGS
10. ALL WATERLINES TO HAVE MINIMUM 10' SEPARATION FROM ALL SEWER LINES, MANHOLES AND CLEANOUTS & TO HAVE 3' OF COVER AND 18" CLEARANCE WHERE WATER CROSSES OTHER UTILITY LINES
11. ANY SANITARY SEWER SYSTEM OR ANY PORTION THEREOF, INCLUDING THE PUMP CHAMBER AND SERVICE CONNECTION PIPE TO THE COLLECTION MAIN, SHALL BE LOCATED AT LEAST A MINIMUM OF 10-FEET FROM ANY WATER LINE. SEWER LINES MAY CROSS A WATER LINE IF 18-INCH CLEAR SEPARATION DISTANCE IS MAINTAINED. WITH THE SEWER LINE CROSSING UNDER THE WATER LINE. WHEN CONDITIONS PREVENT AN 18-INCH CLEAR SEPARATION FROM BEING MAINTAINED OR WHENEVER IT IS NECESSARY FOR THE WATER LINE TO CROSS UNDER THE SEWER, THE SEWER LINE SHALL BE CONSTRUCTED OF DUCTILE IRON PIPE OR ITS EQUIVALENT AND THE WATER LINE SHALL BE CONSTRUCTED OF FERROUS MATERIALS EQUIVALENT TO WATER MAIN STANDARDS WITH FOR A DISTANCE OF AT LEAST TEN FEET ON EACH SIDE OF THE POINT OF CROSSING, WITH FULL SECTIONS OF PIPE CENTERED AT THE POINT OF CROSSING.

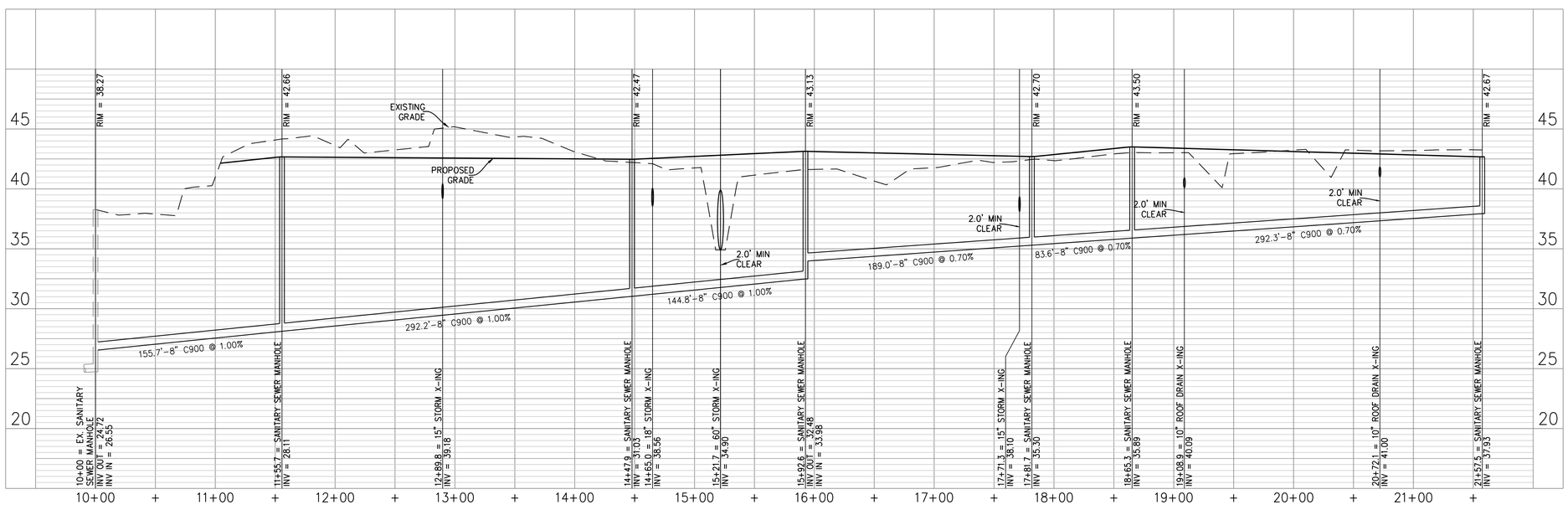

For each open utility cut of City streets, a $325 permit shall be required from the City prior to occupancy and/or project acceptance.

CITY OF WILMINGTON NORTH CAROLINA
Public Services • Engineering Division
APPROVED STORMWATER MANAGEMENT PLAN
Date:_____ Permit #_____
Signed: _____

Approved Construction Plan
Name Date
Planning_____
Traffic_____
Fire_____

NORTH CAROLINA PROFESSIONAL SEAL 031315 ENGINEER GARRY S. PAPE 06/18/2014

GRAPHIC SCALE
1 inch = 50 ft.

No.	Revision	Date	By

Designer GSP	Scale 1" = 50'
Drawn By GSP	Date JUNE 2014
License # P-0718	Job No. 2014-0001

ELLINGTON FARMS

Wilmington New Hanover County North Carolina

UTILITY PLAN

PREPARED FOR:
ELLINGTON FARMS APARTMENTS, LLC
6626-C GORDON ROAD
WILMINGTON, NC 28411
910-799-3006

GSP CONSULTING, PLLC
ENGINEERING
6626 Gordon Road Unit C Wilmington, North Carolina 28411 tel: 910-442-7870 fax: 910-799-6659

Sheet No. C-4

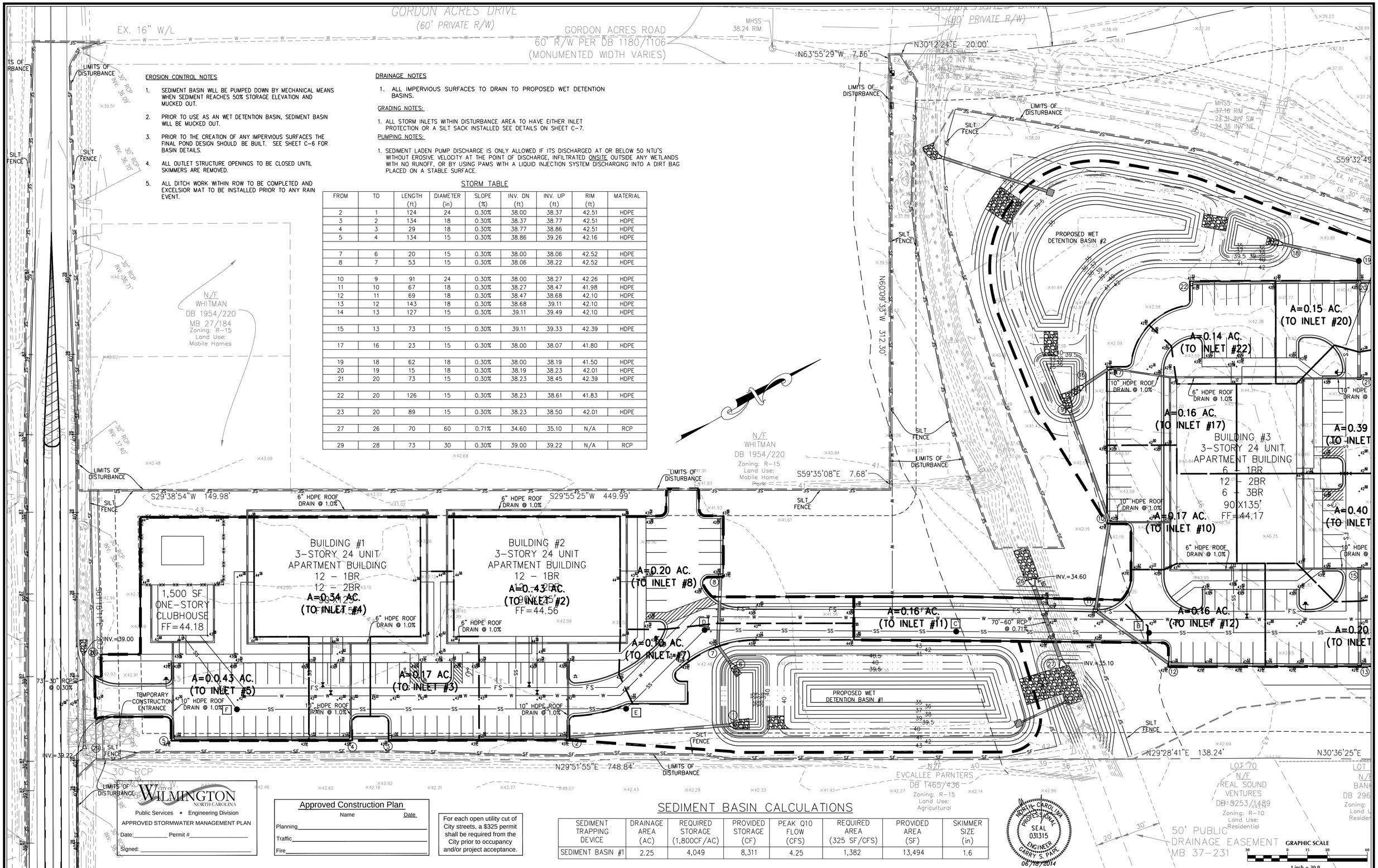

EROSION CONTROL NOTES

1. SEDIMENT BASIN WILL BE PUMPED DOWN BY MECHANICAL MEANS WHEN SEDIMENT REACHES 50% STORAGE ELEVATION AND MUCKED OUT.
2. PRIOR TO USE AS AN WET DETENTION BASIN, SEDIMENT BASIN WILL BE MUCKED OUT.
3. PRIOR TO THE CREATION OF ANY IMPERVIOUS SURFACES THE FINAL POND DESIGN SHOULD BE BUILT. SEE SHEET C-6 FOR BASIN DETAILS.
4. ALL OUTLET STRUCTURE OPENINGS TO BE CLOSED UNTIL SKIMMERS ARE REMOVED.
5. ALL DITCH WORK WITHIN ROW TO BE COMPLETED AND EXCELSIOR MAT TO BE INSTALLED PRIOR TO ANY RAIN EVENT.

DRAINAGE NOTES

1. ALL IMPERVIOUS SURFACES TO DRAIN TO PROPOSED WET DETENTION BASINS.

GRADING NOTES:

1. ALL STORM INLETS WITHIN DISTURBANCE AREA TO HAVE EITHER INLET PROTECTION OR A SILT SACK INSTALLED SEE DETAILS ON SHEET C-7.

PUMPING NOTES:

1. SEDIMENT LADEN PUMP DISCHARGE IS ONLY ALLOWED IF ITS DISCHARGED AT OR BELOW 50 NTU'S WITHOUT EROSIVE VELOCITY AT THE POINT OF DISCHARGE, INFILTRATED ONSITE OUTSIDE ANY WETLANDS WITH NO RUNOFF, OR BY USING PAMS WITH A LIQUID INJECTION SYSTEM DISCHARGING INTO A DIRT BAG PLACED ON A STABLE SURFACE.

STORM TABLE

FROM	TO	LENGTH (ft)	DIAMETER (in)	SLOPE (%)	INV. DN (ft)	INV. UP (ft)	RIM (ft)	MATERIAL
2	1	124	24	0.30%	38.00	38.37	42.51	HDPE
3	2	134	18	0.30%	38.37	38.77	42.51	HDPE
4	3	29	18	0.30%	38.77	38.86	42.51	HDPE
5	4	134	15	0.30%	38.86	39.26	42.16	HDPE
7	6	20	15	0.30%	38.00	38.06	42.52	HDPE
8	7	53	15	0.30%	38.06	38.22	42.52	HDPE
10	9	91	24	0.30%	38.00	38.27	42.26	HDPE
11	10	67	18	0.30%	38.27	38.47	41.98	HDPE
12	11	69	18	0.30%	38.47	38.68	42.10	HDPE
13	12	143	18	0.30%	38.68	39.11	42.10	HDPE
14	13	127	15	0.30%	39.11	39.49	42.10	HDPE
15	13	73	15	0.30%	39.11	39.33	42.39	HDPE
17	16	23	15	0.30%	38.00	38.07	41.80	HDPE
19	18	62	18	0.30%	38.00	38.19	41.50	HDPE
20	19	15	18	0.30%	38.19	38.23	42.01	HDPE
21	20	73	15	0.30%	38.23	38.45	42.39	HDPE
22	20	126	15	0.30%	38.23	38.61	41.83	HDPE
23	20	89	15	0.30%	38.23	38.50	42.01	HDPE
27	26	70	60	0.71%	34.60	35.10	N/A	RCP
29	28	73	30	0.30%	39.00	39.22	N/A	RCP

SEDIMENT BASIN CALCULATIONS

SEDIMENT TRAPPING DEVICE	DRAINAGE AREA (AC)	REQUIRED STORAGE (1,800CF/AC)	PROVIDED STORAGE (CF)	PEAK Q10 FLOW (CFS)	REQUIRED AREA (325 SF/CFS)	PROVIDED AREA (SF)	SKIMMER SIZE (in)
SEDIMENT BASIN #1	2.25	4,049	8,311	4.25	1,382	13,494	1.6

CITY OF WILMINGTON NORTH CAROLINA
Public Services • Engineering Division
APPROVED STORMWATER MANAGEMENT PLAN
Date:_____ Permit #_____
Signed: _____

Approved Construction Plan
Name Date
Planning_____
Traffic_____
Fire_____

For each open utility cut of City streets, a $325 permit shall be required from the City prior to occupancy and/or project acceptance.

NORTH CAROLINA PROFESSIONAL SEAL 031315 ENGINEER GARRY S. PAPE 06/18/2014

No.	Revision	Date	By

Designer GSP	Scale 1" = 30'
Drawn By GSP	Date JUNE 2014
License # P-0718	Job No. 2014-0001

ELLINGTON FARMS
Wilmington New Hanover County North Carolina

GRADING, DRAINAGE & EROSION & SEDIMENT CONTROL PLAN

PREPARED FOR:
ELLINGTON FARMS APARTMENTS, LLC
6626-C GORDON ROAD
WILMINGTON, NC 28411
910-799-3006

GSP CONSULTING, PLLC
ENGINEERING
6626 Gordon Road Unit C Wilmington, North Carolina 28411 tel: 910-442-7870 fax: 910-799-6659

Sheet No.
C-5.1

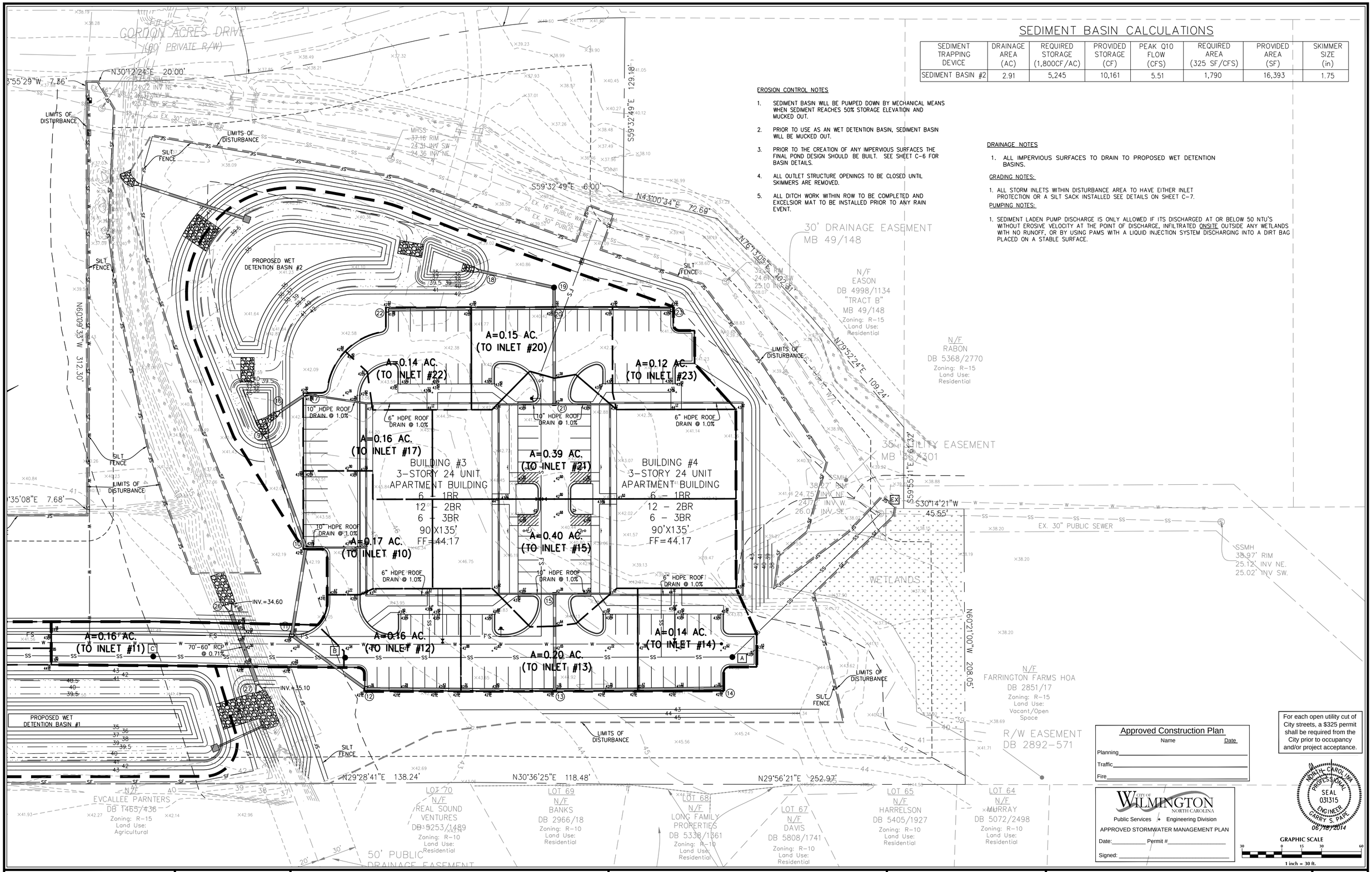

SEDIMENT BASIN CALCULATIONS

SEDIMENT TRAPPING DEVICE	DRAINAGE AREA (AC)	REQUIRED STORAGE (1,800CF/AC)	PROVIDED STORAGE (CF)	PEAK Q10 FLOW (CFS)	REQUIRED AREA (325 SF/CFS)	PROVIDED AREA (SF)	SKIMMER SIZE (in)
SEDIMENT BASIN #2	2.91	5,245	10,161	5.51	1,790	16,393	1.75

EROSION CONTROL NOTES

1. SEDIMENT BASIN WILL BE PUMPED DOWN BY MECHANICAL MEANS WHEN SEDIMENT REACHES 50% STORAGE ELEVATION AND MUCKED OUT.
2. PRIOR TO USE AS AN WET DETENTION BASIN, SEDIMENT BASIN WILL BE MUCKED OUT.
3. PRIOR TO THE CREATION OF ANY IMPERVIOUS SURFACES THE FINAL POND DESIGN SHOULD BE BUILT. SEE SHEET C-6 FOR BASIN DETAILS.
4. ALL OUTLET STRUCTURE OPENINGS TO BE CLOSED UNTIL SKIMMERS ARE REMOVED.
5. ALL DITCH WORK WITHIN ROW TO BE COMPLETED AND EXCELSIOR MAT TO BE INSTALLED PRIOR TO ANY RAIN EVENT.

DRAINAGE NOTES

1. ALL IMPERVIOUS SURFACES TO DRAIN TO PROPOSED WET DETENTION BASINS.

GRADING NOTES:

1. ALL STORM INLETS WITHIN DISTURBANCE AREA TO HAVE EITHER INLET PROTECTION OR A SILT SACK INSTALLED SEE DETAILS ON SHEET C-7.

PUMPING NOTES:

1. SEDIMENT LADEN PUMP DISCHARGE IS ONLY ALLOWED IF ITS DISCHARGED AT OR BELOW 50 NTU'S WITHOUT EROSIVE VELOCITY AT THE POINT OF DISCHARGE, INFILTRATED ONSITE OUTSIDE ANY WETLANDS WITH NO RUNOFF, OR BY USING PAMS WITH A LIQUID INJECTION SYSTEM DISCHARGING INTO A DIRT BAG PLACED ON A STABLE SURFACE.

Approved Construction Plan

Name Date

Planning

Traffic

Fire

For each open utility cut of City streets, a $325 permit shall be required from the City prior to occupancy and/or project acceptance.

CITY OF WILMINGTON NORTH CAROLINA

Public Services • Engineering Division

APPROVED STORMWATER MANAGEMENT PLAN

Date: Permit #

Signed:

NORTH CAROLINA PROFESSIONAL SEAL 031315 ENGINEER GARRY S. PAPE 06/18/2014

GRAPHIC SCALE

30 0 15 30 60

1 inch = 30 ft.

No.	Revision	Date	By

Designer GSP	Scale 1" = 30'
Drawn By GSP	Date JUNE 2014
License # P-0718	Job No. 2014-0001

ELLINGTON FARMS

Wilmington New Hanover County North Carolina

GRADING, DRAINAGE & EROSION & SEDIMENT CONTROL PLAN

PREPARED FOR:
ELLINGTON FARMS APARTMENTS, LLC
6626-C GORDON ROAD
WILMINGTON, NC 28411
910-799-3006

GSP CONSULTING, PLLC
ENGINEERING
6626 Gordon Road Unit C Wilmington, North Carolina 28411 tel: 910-442-7870 fax: 910-799-6659

Sheet No. C-5.2

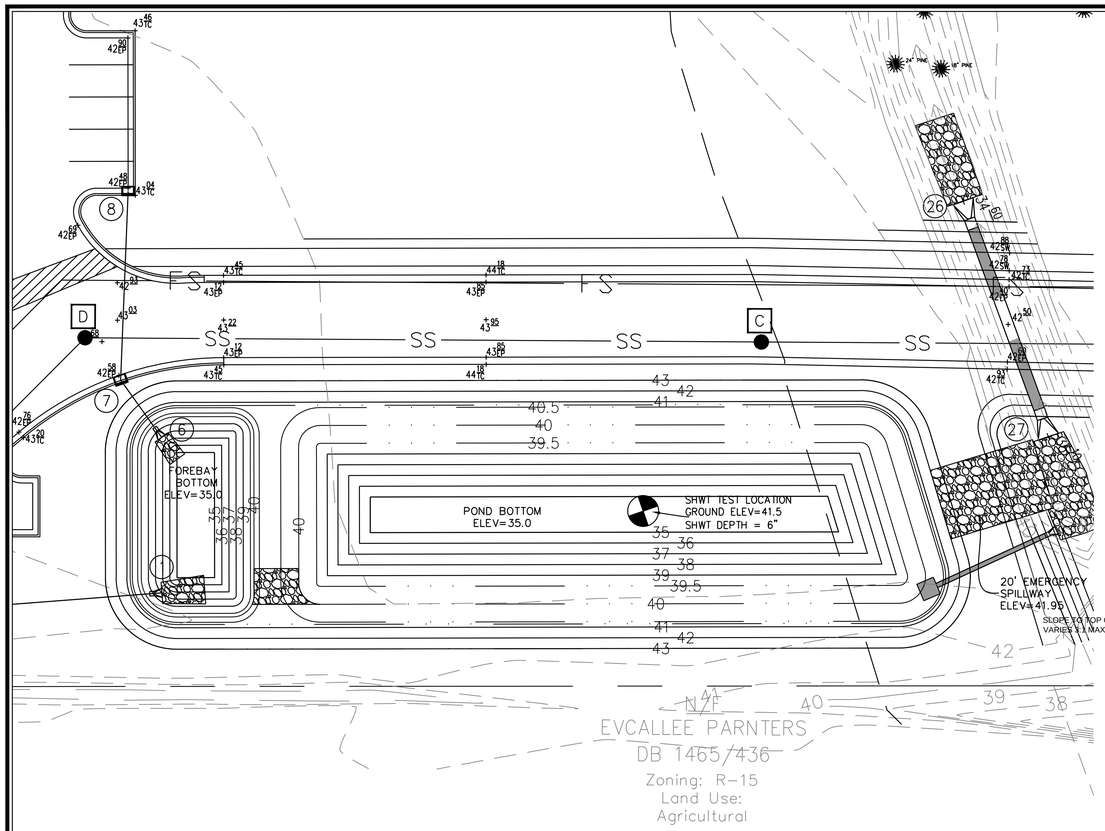

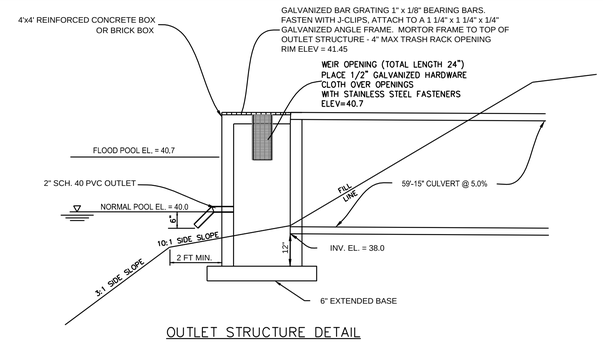

OUTLET STRUCTURE DETAIL

N.T.S.

NOTES:

1. DESIGN ELEVATIONS FOR WET DETENTION BASIN ARE TO AN ELEVATION OF 35.0 IN THE MAIN POND AND 35.0 IN THE FOREBAY WITH SEDIMENT STORAGE DOWN TO 34.0 IN THE MAIN POND AND 34.0 IN THE FOREBAY.
2. SEASON HIGH WATER TABLE WAS TAKEN AT A GROUND ELEVATION OF 41.5 AND ESTIMATED TO BE 6 INCHES FOR AN ELEVATION OF 41.0.
3. ALL IMPERVIOUS SITE AREA TO BE DRAINED TO PROPOSED STORM SEWER SYSTEM AND DISCHARGED TO THE WET DETENTION POND.
4. POND WILL BE PUMPED DOWN BY MECHANICAL MEANS IN CASE OF EMERGENCY.
5. PRIOR TO USE AS A WET DETENTION BASIN, SEDIMENT BASIN WILL BE MUCKED OUT.
6. POND SIDE SLOPES TO BE SODDED WITH CENTIPEDE GRASS OR EQUIVALENT.
7. ALL SLOPES ABOVE PERMANENT POOL TO BE 3:1 MAX.

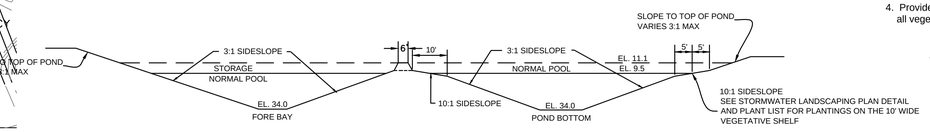

NORMAL POOL ELEVATION	SHELF BOTTOM ELEVATION	POND DEPTH (FT)	SHELF BOTTOM AREA (SF)	POND BOTTOM AREA (SF)	SURFACE AREA PROVIDED (SF)	SURFACE AREA REQUIRED (SF)	AVERAGE POND DEPTH (FT)
40.0	39.5	4.5	8,019	1,659	10,251	7,141	3.0

POND CROSS-SECTION

N.T.S.

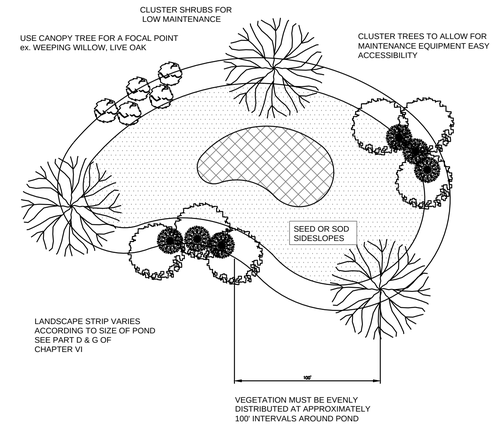

Notes:
1. If possible, locate pond where vegetation exists.
2. Suggest minimal clearing to conserve visual quality of site and minimize the additional of tree planting. An irregular shape provides a more natural appearance.
3. Landscape strip shall be a maximum slope of 7:1 in order to plant vegetation.
4. Provide a minimum of 3 inches of mulch around all vegetation.

TYPICAL STORM WATER FACILITY

LANDSCAPING PLAN

SD 15-16

*LANDSCAPING TO BE DONE PER APPROVED LANDSCAPE PLAN

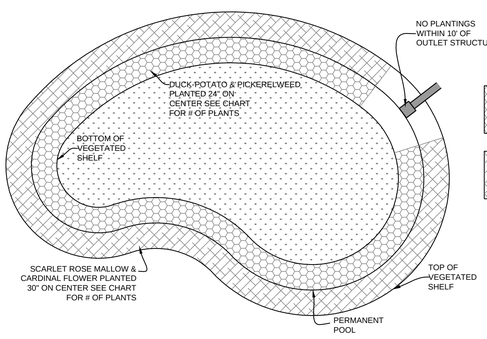

TYPICAL VEGETATED SHELF

LANDSCAPING PLAN

SHALLOW WATER

SHALLOW LAND

SHALLOW WATER COMMUNITY (NORMAL POOL TO SHELF BOTTOM) = 1,973 S.F.
@ 1 PLANT PER 4 SF (24" O.C.) =494 PLANTS

PLANT TYPE	QTY		BOTANICAL NAME	COMMON NAME	ROOT	CALIPER	HEIGHT	NOTES
HERBACEOUS	247		Sagittaria latifolia	Duck Potato	CONT.	4" Pot		24" O.C.
	247		Pontedaria cordata	Pickerelweed	CONT.	4" Pot		24" O.C.

SHALLOW LAND COMMUNITY (NORMAL POOL TO SHELF TOP) = 2,083 S.F.
@ 1 PLANT PER 6.25 SF (30" O.C.) =334 PLANTS

PLANT TYPE	QTY		BOTANICAL NAME	COMMON NAME	ROOT	CALIPER	HEIGHT	NOTES
HERBACEOUS	167		Hibiscus coccineus	Scarlet Rose Mallow	CONT.	4" Pot		30" O.C.
	167		Lobelia cardinalis	Cardinal Flower	CONT.	4" Pot		30" O.C.

NOTES:

1. NO PLANTINGS WITHIN 10' OF OUTLET STRUCTURE.

2. BECAUSE MOST STORMWATER BASINS ARE EXCAVATED TO DEEP SUB-SOILS, THEY OFTEN LACK THE NUTRIENTS AND ORGANIC MATTER NEEDED TO SUPPORT VIGOROUS GROWTH OF PLANTS. ALL LANDSCAPE MATERIAL, INCLUDING GRASS, SHOULD BE PLANTED IN GOOD TOPSOIL. NATIVE UNDERLYING SOILS MAY BE SUITABLE FOR PLANTING IF AMENDED WITH 4 INCHES OF WELL-AGED COMPOST TILLED INTO THE SUBGRADE. COMPOST SHOULD MEET SPECIFICATIONS FOR GRADE A COMPOST QUALITY.

3. A MINIMUM TWO-YEAR WARRANTY PERIOD STIPULATING REQUIREMENTS FOR PLANT SURVIVAL/REPLACEMENT.

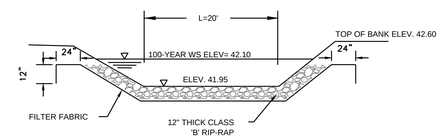

EMERGENCY SPILLWAY

N.T.S.

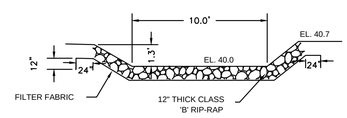

FOREBAY RIP-RAP

N.T.S.

For each open utility cut of City streets, a $325 permit shall be required from the City prior to occupancy and/or project acceptance.

Approved Construction Plan

	Name	Date
Planning		
Traffic		
Fire		

CITY OF WILMINGTON NORTH CAROLINA

Public Services • Engineering Division

APPROVED STORMWATER MANAGEMENT PLAN

Date:_____ Permit #_____

Signed: _____

NORTH CAROLINA PROFESSIONAL SEAL 031315 ENGINEER GARRY S. PAPE 06/29/2014

GRAPHIC SCALE

20 0 10 20 40

1 inch = 20 ft.

No.	Revision	Date	By

Designer GSP	Scale 1" = 20'
Drawn By GSP	Date JUNE 2014
License # P-0718	Job No. 2014-0001

ELLINGTON FARMS

Wilmington New Hanover County North Carolina

WET DETENTION DETAILS

POND #1

PREPARED FOR:

ELLINGTON FARMS APARTMENTS, LLC
6626-C GORDON ROAD
WILMINGTON, NC 28411
910-799-3006

GSP CONSULTING, PLLC
ENGINEERING
6626 Gordon Road Unit C Wilmington, North Carolina 28411 tel: 910-442-7870 fax: 910-799-6659

Sheet No.

C-6.1

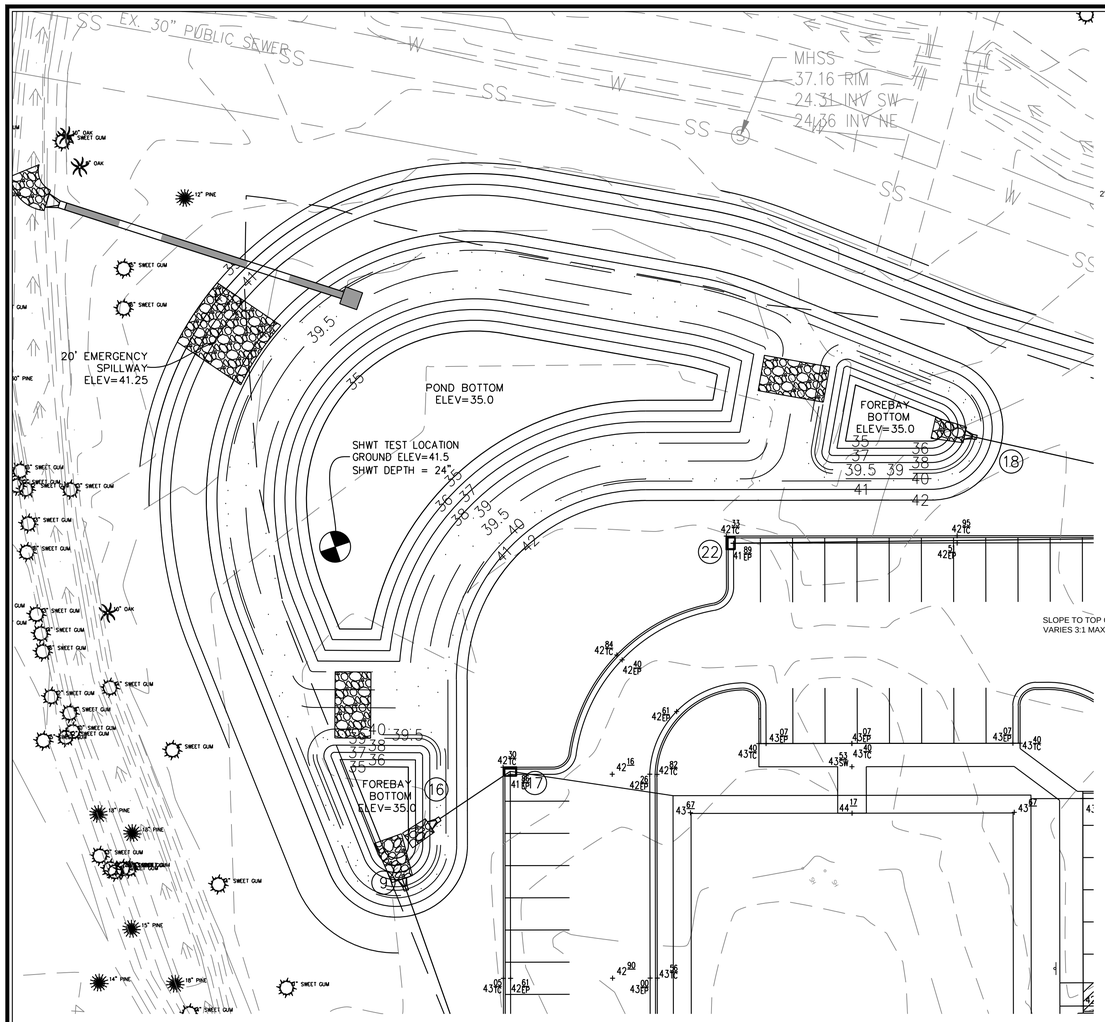

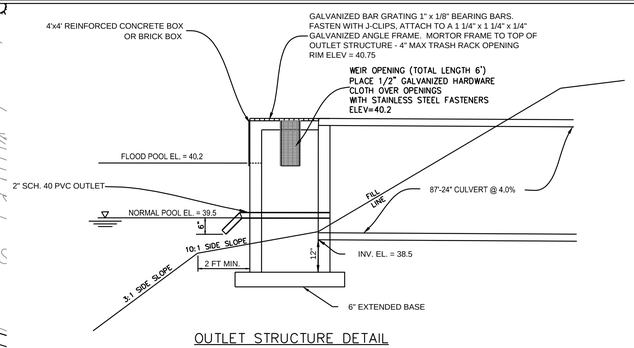

OUTLET STRUCTURE DETAIL

N.T.S.

NOTES:

1. DESIGN ELEVATIONS FOR WET DETENTION BASIN ARE TO AN ELEVATION OF 35.0 IN THE MAIN POND AND 35.0 IN THE FOREBAY WITH SEDIMENT STORAGE DOWN TO 34.0 IN THE MAIN POND AND 34.0 IN THE FOREBAY.
2. SEASON HIGH WATER TABLE WAS TAKEN AT A GROUND ELEVATION OF 41.5 AND ESTIMATED TO BE 24 INCHES FOR AN ELEVATION OF 39.5, WHICH IS WITHIN 6" OF THE PERMANENT POOL ELEVATION OF 39.5.
3. ALL IMPERVIOUS SITE AREA TO BE DRAINED TO PROPOSED STORM SEWER SYSTEM AND DISCHARGED TO THE WET DETENTION POND.
4. POND WILL BE PUMPED DOWN BY MECHANICAL MEANS IN CASE OF EMERGENCY.
5. PRIOR TO USE AS A WET DETENTION BASIN, SEDIMENT BASIN WILL BE MUCKED OUT.
6. POND SIDE SLOPES TO BE SODDED WITH CENTIPEDE GRASS OR EQUIVALENT.
7. ALL SLOPES ABOVE PERMANENT POOL TO BE 3:1 MAX.

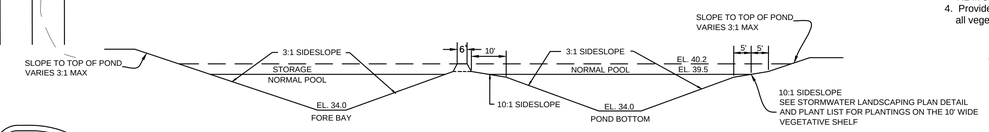

NORMAL POOL ELEVATION	SHELF BOTTOM ELEVATION	POND DEPTH (FT)	SHELF BOTTOM AREA (SF)	POND BOTTOM AREA (SF)	SURFACE AREA PROVIDED (SF)	SURFACE AREA REQUIRED (SF)	AVERAGE POND DEPTH (FT)
39.5	39.0	4.0	10,244	4,202	12,638	8,003	3.5

POND CROSS-SECTION

N.T.S.

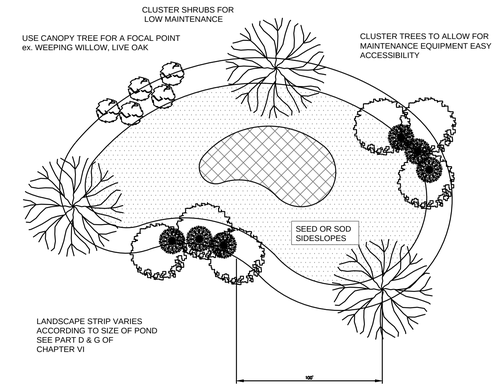

Notes:
1. If possible, locate pond where vegetation exists.
2. Suggest minimal clearing to conserve visual quality of site and minimize the additional of tree planting. An irregular shape provides a more natural appearance.
3. Landscape strip shall be a maximum slope of 7:1 in order to plant vegetation.
4. Provide a minimum of 3 inches of mulch around all vegetation.

TYPICAL STORM WATER FACILITY

LANDSCAPING PLAN

SD 15-16

*LANDSCAPING TO BE DONE PER APPROVED LANDSCAPE PLAN

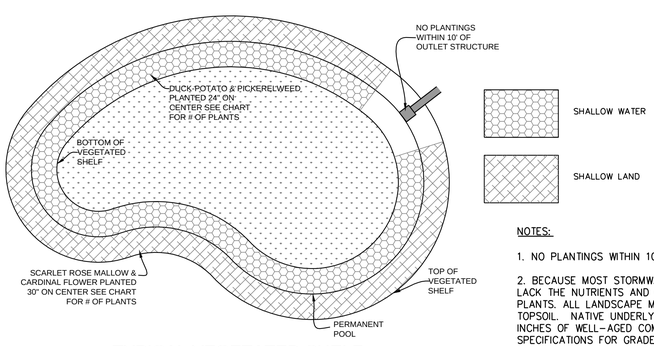

TYPICAL VEGETATED SHELF

LANDSCAPING PLAN

SHALLOW WATER COMMUNITY (NORMAL POOL TO SHELF BOTTOM) = 2,006 S.F.
@ 1 PLANT PER 4 SF (24" O.C.) = 502 PLANTS

PLANT TYPE	QTY		BOTANICAL NAME	COMMON NAME	ROOT	CALIPER	HEIGHT	NOTES
HERBACEOUS	251		Sagittaria latifolia	Duck Potato	CONT.	4" Pot		24" O.C.
	251		Pontedaria cordata	Pickerelweed	CONT.	4" Pot		24" O.C.

SHALLOW LAND COMMUNITY (NORMAL POOL TO SHELF TOP) = 2,152 S.F.
@ 1 PLANT PER 6.25 SF (30" O.C.) = 344 PLANTS

PLANT TYPE	QTY		BOTANICAL NAME	COMMON NAME	ROOT	CALIPER	HEIGHT	NOTES
HERBACEOUS	172		Hibiscus coccineus	Scarlet Rose Mallow	CONT.	4" Pot		30" O.C.
	172		Lobelia cardinalis	Cardinal Flower	CONT.	4" Pot		30" O.C.

NOTES:

1. NO PLANTINGS WITHIN 10' OF OUTLET STRUCTURE.

2. BECAUSE MOST STORMWATER BASINS ARE EXCAVATED TO DEEP SUB-SOILS, THEY OFTEN LACK THE NUTRIENTS AND ORGANIC MATTER NEEDED TO SUPPORT VIGOROUS GROWTH OF PLANTS. ALL LANDSCAPE MATERIAL, INCLUDING GRASS, SHOULD BE PLANTED IN GOOD TOPSOIL. NATIVE UNDERLYING SOILS MAY BE SUITABLE FOR PLANTING IF AMENDED WITH 4 INCHES OF WELL-AGED COMPOST TILLED INTO THE SUBGRADE. COMPOST SHOULD MEET SPECIFICATIONS FOR GRADE A COMPOST QUALITY.

3. A MINIMUM TWO-YEAR WARRANTY PERIOD STIPULATING REQUIREMENTS FOR PLANT SURVIVAL/REPLACEMENT.

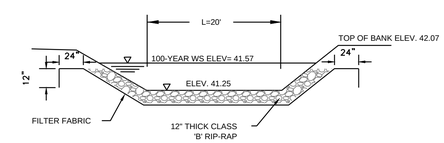

EMERGENCY SPILLWAY

N.T.S.

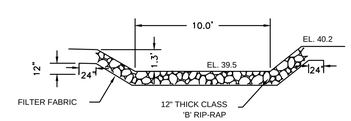

FOREBAY RIP-RAP

N.T.S.

For each open utility cut of City streets, a $325 permit shall be required from the City prior to occupancy and/or project acceptance.

Approved Construction Plan

	Name	Date
Planning		
Traffic		
Fire		

CITY OF WILMINGTON NORTH CAROLINA
Public Services • Engineering Division
APPROVED STORMWATER MANAGEMENT PLAN
Date:_____ Permit #_____
Signed: _____

NORTH CAROLINA PROFESSIONAL SEAL 031315 ENGINEER GARRY S. PAPE 05/27/2014

GRAPHIC SCALE
20 0 10 20 40
1 inch = 20 ft.

No.	Revision	Date	By

Designer GSP	Scale 1" = 20'
Drawn By GSP	Date JUNE 2014
License # P-0718	Job No. 2014-0001

ELLINGTON FARMS

Wilmington New Hanover County North Carolina

WET DETENTION DETAILS
POND #2

PREPARED FOR:
ELLINGTON FARMS APARTMENTS, LLC
6626-C GORDON ROAD
WILMINGTON, NC 28411
910-799-3006

GSP CONSULTING, PLLC
ENGINEERING
6626 Gordon Road Unit C Wilmington, North Carolina 28411 tel: 910-442-7870 fax: 910-799-6659

Sheet No.
C-6.2

GENERAL NOTES

I. LOCATION OF WHEELCHAIR RAMPS:
1. IN ACCORDANCE WITH THE RATIFIED HOUSE BILL 1296, ALL STREET CURBS IN NORTH CAROLINA BEING CONSTRUCTED OR RECONSTRUCTED FOR MAINTENANCE PROCEDURES, TRAFFIC OPERATIONS, REPAIRS, CORRECTION OF UTILITIES OR ALTERED FOR ANY REASON AFTER SEPTEMBER 1, 1973 SHALL PROVIDE WHEELCHAIR RAMPS FOR THE PHYSICALLY HANDICAPPED AT ALL INTERSECTIONS WHERE BOTH CURB AND GUTTERS AND SIDEWALKS ARE PROVIDED AND AT OTHER MAJOR POINTS OF PEDESTRIAN FLOW.
2. WHEELCHAIR RAMPS SHOULD BE LOCATED AS INDICATED IN DETAIL DRAWINGS, HOWEVER EXISTING LIGHT POLES, FIRE HYDRANTS, DROP INLETS, ETC. MAY AFFECT PLACEMENT.

II. CONSTRUCTION NOTES:
1. NO SLOPE SHALL EXCEED 1"=1" (12:1) ON THE RAMP OR SIDEWALK.
2. IN NO CASE SHALL THE WIDTH OF WHEELCHAIR RAMPS BE LESS THAN 40" (3'-4"). WIDTHS MAY EXCEED 40" IF NECESSARY.
3. USE CLASS "A" CONCRETE WITH THE SURFACE HAVING A ROUGH, NON-SKID TYPE FINISH.
4. 1/2" EXPANSION JOINT WILL BE REQUIRED WHERE THE CONCRETE WHEELCHAIR RAMP JOINS ANY RIGID PAVEMENT OR STRUCTURE.
5. CONSTRUCTION METHODS SHALL CONFORM WITH THOSE OF THE GOVERNING BODY WHICH HAS JURISDICTION OF THE PARTICULAR STREET.

III. ADDITIONAL NOTES:
1. THE INSIDE PEDESTRIAN CROSSWALK LINES SHALL BE ESTABLISHED BY BISECTING THE INTERSECTION RADII WHERE MARKED (SEE NOTE 6).
2. THE WHEELCHAIR RAMP SHALL BE LOCATED SO THAT THE BEGINNING OF THE WHEEL CHAIR RAMP WILL BE TWO FEET FROM THE INSIDE PEDESTRIAN CROSSWALK LINE.
3. THE WIDTH OF THE PEDESTRIAN CROSSWALK SHALL BE 10 FEET UNLESS A GREATER WIDTH IS REQUIRED TO ACCOMMODATE THE PEDESTRIAN TRAFFIC.
4. STOP BARS SHALL BE USED WHERE IT IS IMPORTANT TO INDICATE THE POINT BEHIND WHICH VEHICLES ARE REQUIRED TO STOP IN COMPLIANCE WITH A TRAFFIC SIGNAL, STOP SIGN, OR OTHER LEGAL REQUIREMENTS.
5. PARKING SHALL BE ELIMINATED A MINIMUM OF 20 FEET BACK OF PEDESTRIAN CROSSWALK.
6. ALL PAVEMENT MARKINGS SHALL BE IN ACCORDANCE WITH THE LATEST EDITION OF THE MANUAL OF UNIFORM TRAFFIC CONTROL DEVICES, PUBLISHED BY THE FEDERAL HIGHWAY ADMINISTRATION. THIS IS AVAILABLE FROM THE SUPERINTENDENT OF DOCUMENTS, U.S GOVERNMENT PRINTING OFFICE, WASHINGTON, D.C. 20402.

GUIDELINES FOR WHEELCHAIR RAMPS

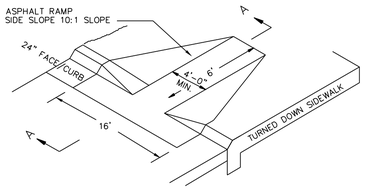

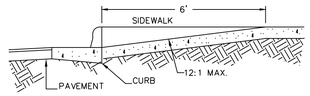

SECTION A–A
WHEELCHAIR RAMP (DROP CURB)

WHEELCHAIR RAMP
N.T.S.

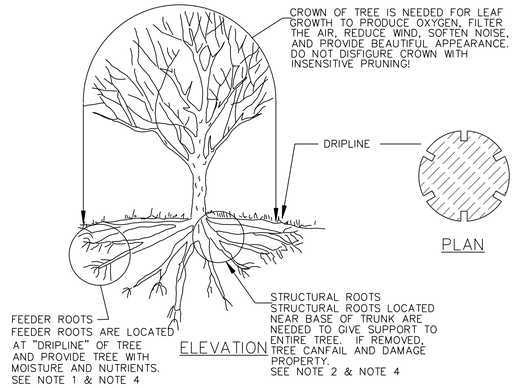

ELEVATION

PLAN

TREE PROTECTION DURING CONSTRUCTION

1. DO NOT COMPACT SOIL BENEATH TREES. NO VEHICLE SHALL BE ALLOWED TO PARK UNDER TREES. NO HEAVY MATERIALS SHALL BE STORED BENEATH TREES. RESULTS OF COMPACTION CAUSE WATER AND AIR NOT TO REACH THE ROOTS AND THE TREE WILL DIE. THESE "FEEDING ROOTS" OCCUR WELL AWAY FROM THE BASE OF THE TREE TO THE EDGE OF THE OVERHEAD BRANCH CANOPY. DAMAGING THE BARK WITH LAWNMOWERS, CONSTRUCTION EQUIPMENT, OR ANYTHING ELSE IS PROHIBITED. APROTECTIVE BARRIER SHOULD PREVENT DAMAGE FROM OCCURING DURING CONSTRUCTION.
2. NO CUTTING OF LARGE STRUCTURAL ROOTS LOCATED NEAR THE BASE OF THE TRUNK. THESE ARE ESSENTIAL IN SUPPORTING THE TREE AND HOLDING IT UPRIGHT IN HIGH WINDS. REMOVAL OF THESE ROOTS ALONG ONE SIDE IS OFTEN DONE BECAUSE OF A WALK, PAVING OR BUILDING WHICH IS BEING CONSTRUCTED.
3. AVOID CUT AND FILL WITHIN DIAMETER OF TREE CROWN DURING EXCAVATION.

METHOD OF TREE PROTECTION DURING CONSTRUCTION
SD 15–09
NOT TO SCALE

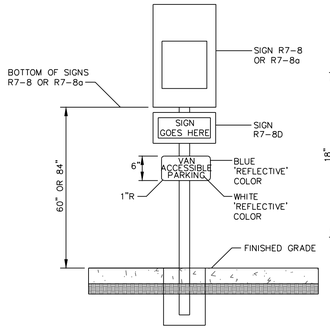

HANDICAP PARKING SIGNAGE
N.T.S.

SIGN APPROVED FOR USE UNDER GENERAL STATUTE 20.37.5

COLORS:
LEGEND AND BORDER–GREEN
WHITE SYMBOL ON BLUE BACKGROUND
BACKGROUND–WHITE

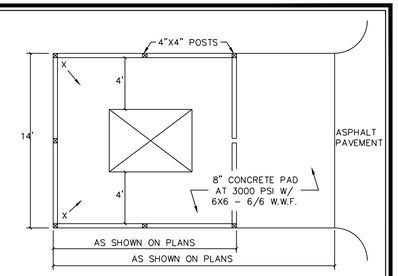

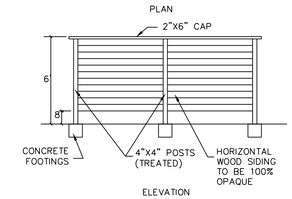

DUMPSTER PAD & ENCLOSURE DETAIL
N.T.S.

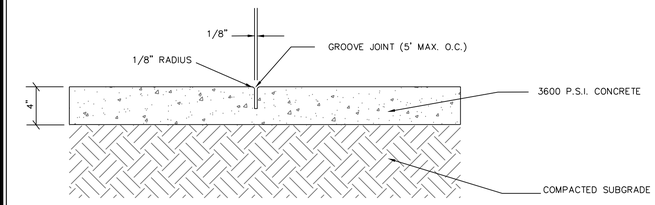

CONCRETE SIDEWALK DETAIL

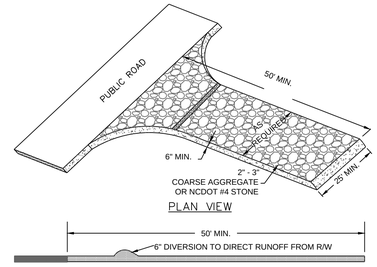

TEMPORARY CONSTRUCTION ENTRANCE
N.T.S.

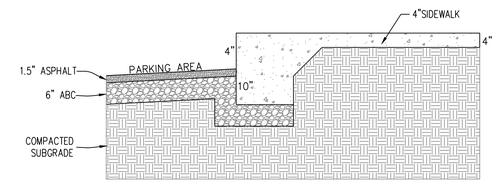

TURNDOWN SIDEWALK DETAIL
N.T.S.

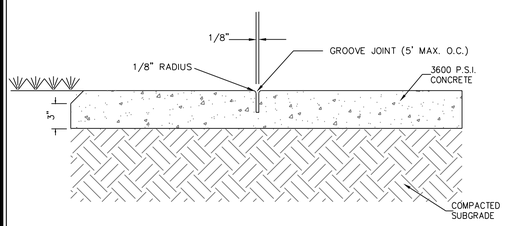

SIDEWALK ADJACENT TO GRASSED AREAS AND PLANTERS

CONCRETE SIDEWALK
N.T.S.

GENERAL NOTES:
A GROOVE JOINT 1" DEEP WITH 1/8" RADII SHALL BE REQUIRED IN THE CONCRETE SIDEWALK AT 5' INTERVALS. ONE 1/2" EXPANSION JOINT WILL BE REQUIRED AT 45' INTERVALS. A 1/2" EXPANSION JOINT WILL BE REQUIRED WHERE THE SIDEWALK ABUTS ANY CURB & GUTTER AND ANY RIGID STRUCTURES. IN SIDEWALKS & PLAZA AREAS EXPANSION JOINTS ARE REQUIRED AT NO GREATER THAN 30' INTERVALS CONCRETE SHALL BE 3600 PSI. IN 28 DAYS.

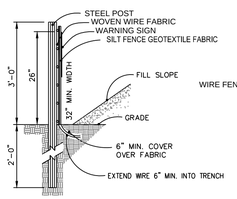

SIDE VIEW

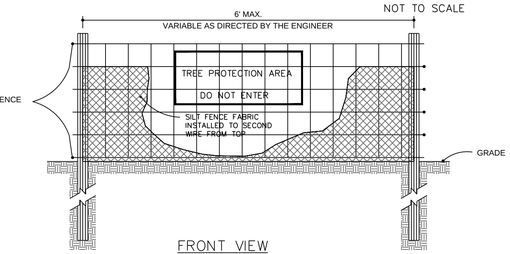

FRONT VIEW

NOTES:
1. SYNTHETIC FILTER FABRIC SHOULD BE OF AT LEAST 95% BY WEIGHT OF POLYOLEFINS OR POLYESTER, WHICH IS CERTIFIED BY THE MANUFACTURER OR SUPPLIER PER ASTM D 6461 AND SHOULD CONTAIN ULTRAVIOLET RAY INHIBITORS AND STABILIZERS PER ASTM D 4355.
2. WIRE FENCE SHALL BE MINIMUM 14 GAUGE WITH A MAXIMUM MESH OPENING OF 6–INCHES.
3. SEE THE NC EROSION AND SEDIMENTATION CONTROL MANUAL FOR OTHER SPECIFICATIONS.

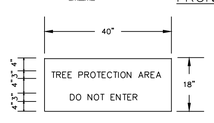

WARNING SIGN DETAIL

NOTE:
WARNING SIGNS TO BE MADE OF DURABLE, WEATHERPROOF MATERIAL. LETTERS TO BE 3" HIGH MINIMUM, CLEARLY LEGIBLE AND SPACED AS DETAILED. SIGNS SHALL BE PLACED AT 50' MAXIMUM INTERVALS. PLACE A SIGN AT EACH END OF LINEAR TREE PROTECTION AND 50' ON CENTER THEREAFTER. FOR TREE PROTECTION AREAS LESS THAN 200' IN PERIMETER, PROVIDE NO LESS THAN ONE SIGN PER PROTECTION AREA. ATTACH SIGNS SECURELY TO FENCE POSTS AND FABRIC. MAINTAIN TREE PROTECTION FENCE THROUGHOUT DURATION OF PROJECT.

STANDARD TEMPORARY SILT / TREE PROTECTION FENCE
N.T.S.

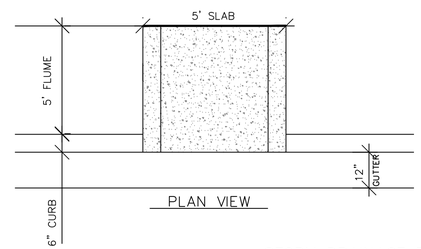

STORM DRAINAGE FLUME
N.T.S.

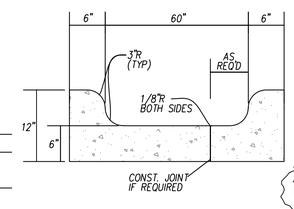

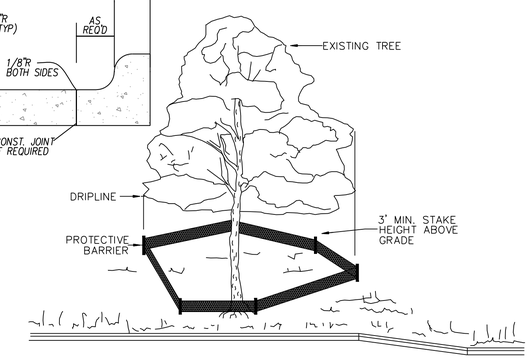

NOTE:
TREES TO BE SAVED WILL BE CLEARLY MARKED PRIOR TO CONSTRUCTION AND A PROTECTIVE BARRIER IS TO BE INSTALLED AT THE DRIPLINE.
DRIP LINE – THE AREA OF SOIL DIRECTLY BENEATH THE TREE EXTENDING OUT TO THE TIPS OF THE OUTERMOST BRANCHES.

METHOD OF TREE PROTECTION DURING CONSTRUCTION
SD 15–08
NOT TO SCALE

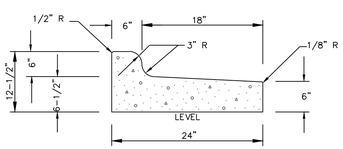

(TO BE USED WHEN PAVEMENT IS SLOPED AWAY FROM ISLAND 1/4' : 1'–0" SLOPE OR AS SHOWN ON PLANS)

24" CURB AND GUTTER
(REVERSE SLOPE)

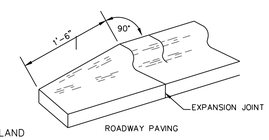

24" CURB & GUTTER
TERMINATION DETAIL

CURB AND GUTTER
N.T.S.

GENERAL NOTES:
CONTRACTION JOINTS SHALL BE SPACED AT MAX. 10' INTERVALS, EXCEPT THAT A 15 FOOT SPACING MAY BE USED WHEN A MACHINE IS USED OR WHEN SATISFACTORY SUPPORT FOR THE FACE FORM CAN BE OBTAINED WITHOUT THE USE OF TEMPLATES AT 10 FOOT INTERVALS. JOINT SPACING MAY BE ALTERED BY THE ENGINEER TO PREVENT UNCONTROLLED CRACKING. CONTRACTION JOINTS MAY BE INSTALLED BY THE USE OF TEMPLATES OR FORMED BY OTHER APPROVED METHODS. WHERE SUCH JOINTS ARE NOT FORMED BY TEMPLATES, A MINIMUM DEPTH OF 1–1/2" SHALL BE OBTAINED. ALL CONTRACTION JOINTS EXCEPT IN 8" X 6" MEDIAN CURB SHALL BE FILLED WITH JOINT SEALER. EXPANSION JOINTS SHALL BE SPACED AT 90' INTERVALS AND ADJACENT TO ALL RIGID OBJECTS.

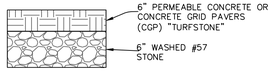

PERMEABLE PAVEMENT SECTION
N.T.S.

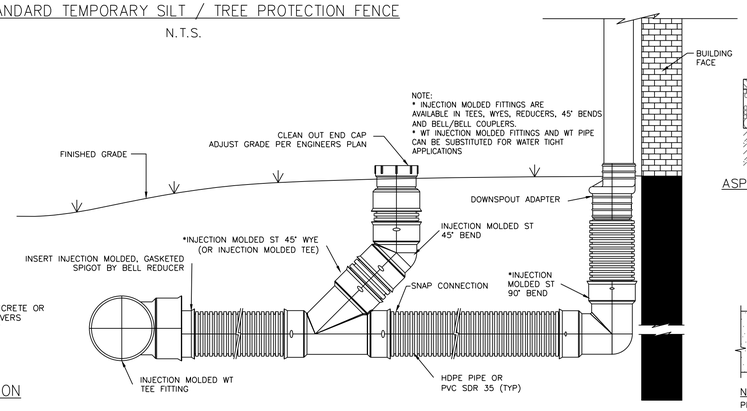

ROOF DRAIN DETAIL WITH CLEANOUT
N.T.S.

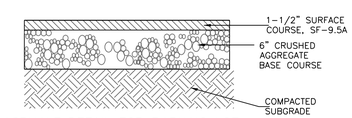

ASPHALT DETAIL FOR PARKING LOT

PAVEMENT DETAIL
N.T.S.

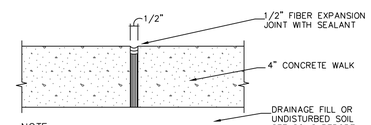

NOTE:
PROVIDE CONSTRUCTION JOINTS AT 25' O.C. MAX. IN EITHER DIRECTION WITH SQUARE FOOTAGE LESS THAN 400 S.F. AND AT CURVES, TANGENTS, AND CORNERS (UNLESS NOTED OTHERWISE).

CONSTRUCTION JOINT
N.T.S.

Approved Construction Plan

	Name	Date
Planning		
Traffic		
Fire		

For each open utility cut of City streets, a $325 permit shall be required from the City prior to occupancy and/or project acceptance.

CITY OF WILMINGTON NORTH CAROLINA
Public Services • Engineering Division
APPROVED STORMWATER MANAGEMENT PLAN
Date:_____ Permit #_____
Signed: _____

NORTH CAROLINA PROFESSIONAL SEAL 031315 ENGINEER CARRY S. PAK
06/23/2014

No.	Revision	Date	By

Designer GSP	Scale 1" = 30'
Drawn By GSP	Date JUNE 2014
License # P–0718	Job No. 2014–0001

ELLINGTON FARMS
Wilmington New Hanover County North Carolina

STANDARD DETAILS

PREPARED FOR:
ELLINGTON FARMS APARTMENTS, LLC
6626-C GORDON ROAD
WILMINGTON, NC 28411
910-799-3006

GSP CONSULTING, PLLC
ENGINEERING
6626 Gordon Road Unit C Wilmington, North Carolina 28411 tel: 910-442-7870 fax: 910-799-6659

Sheet No.
C-7

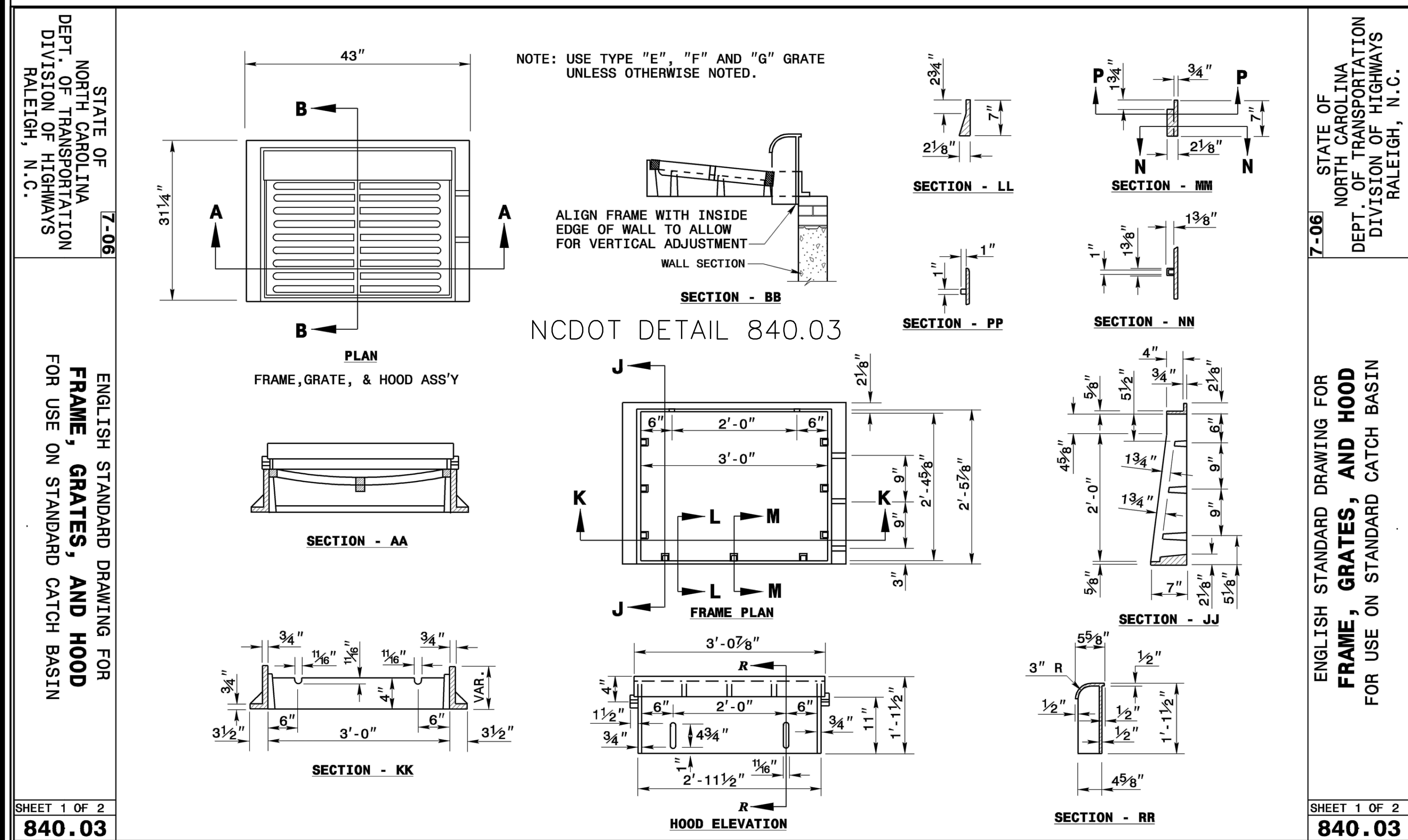

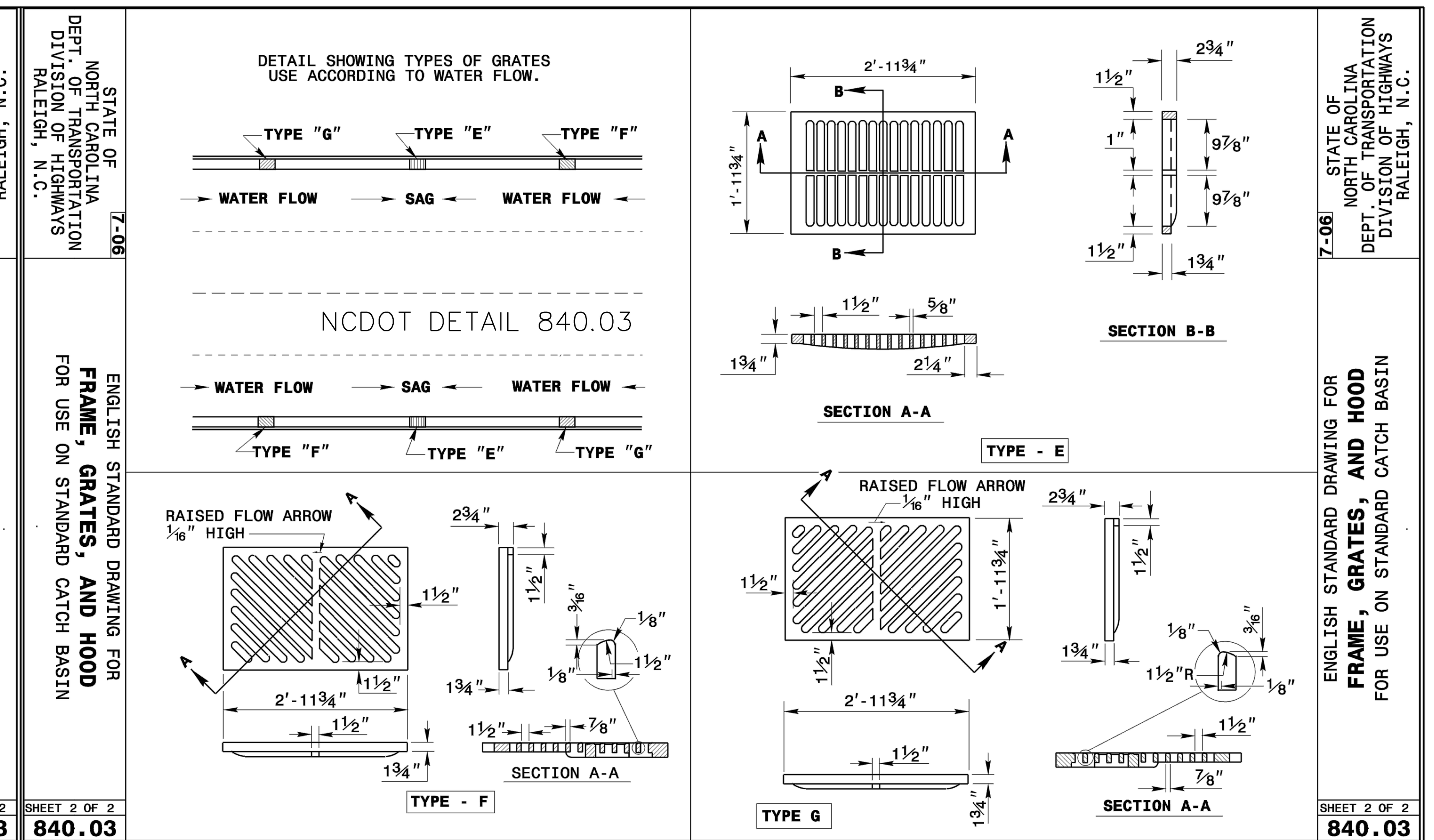

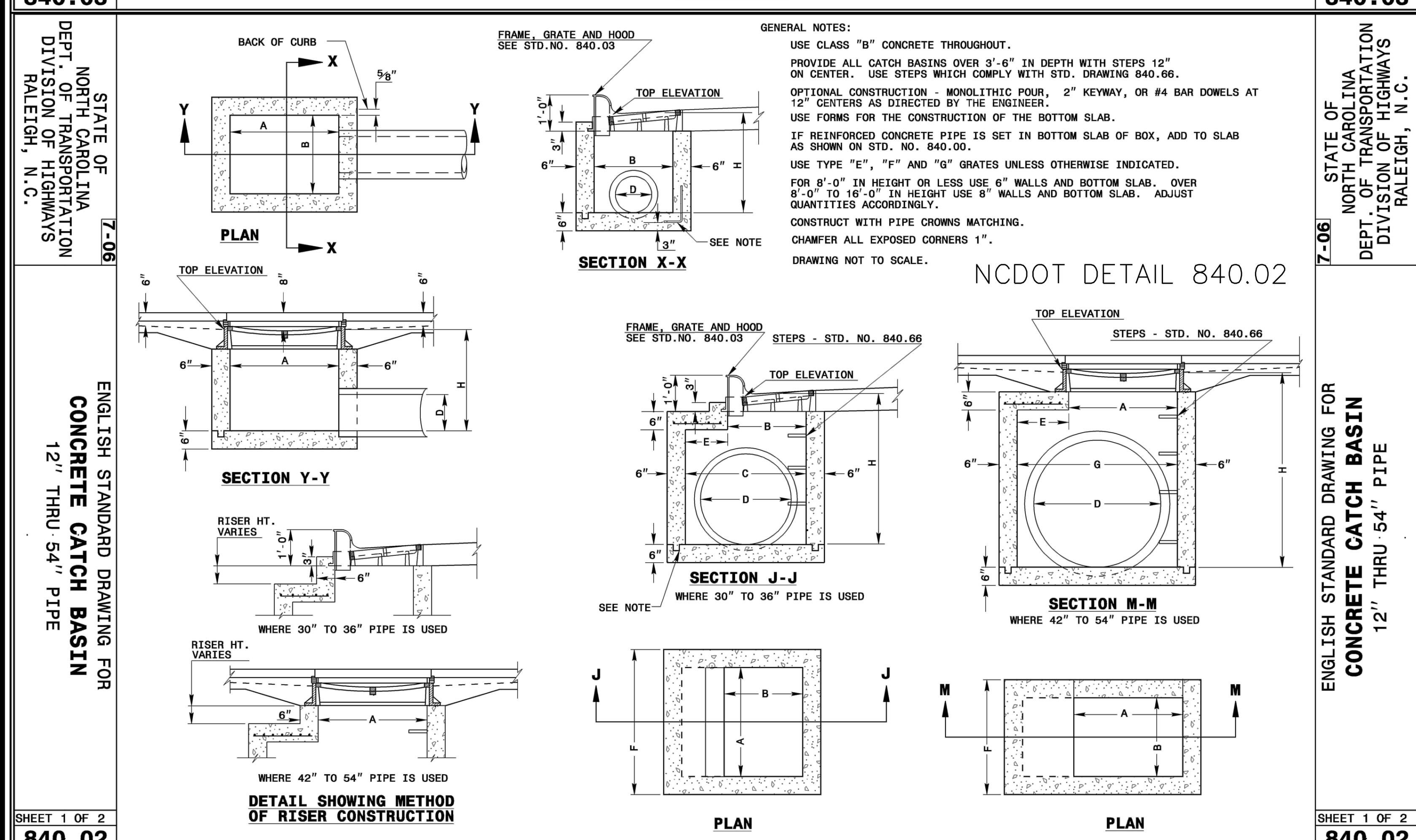

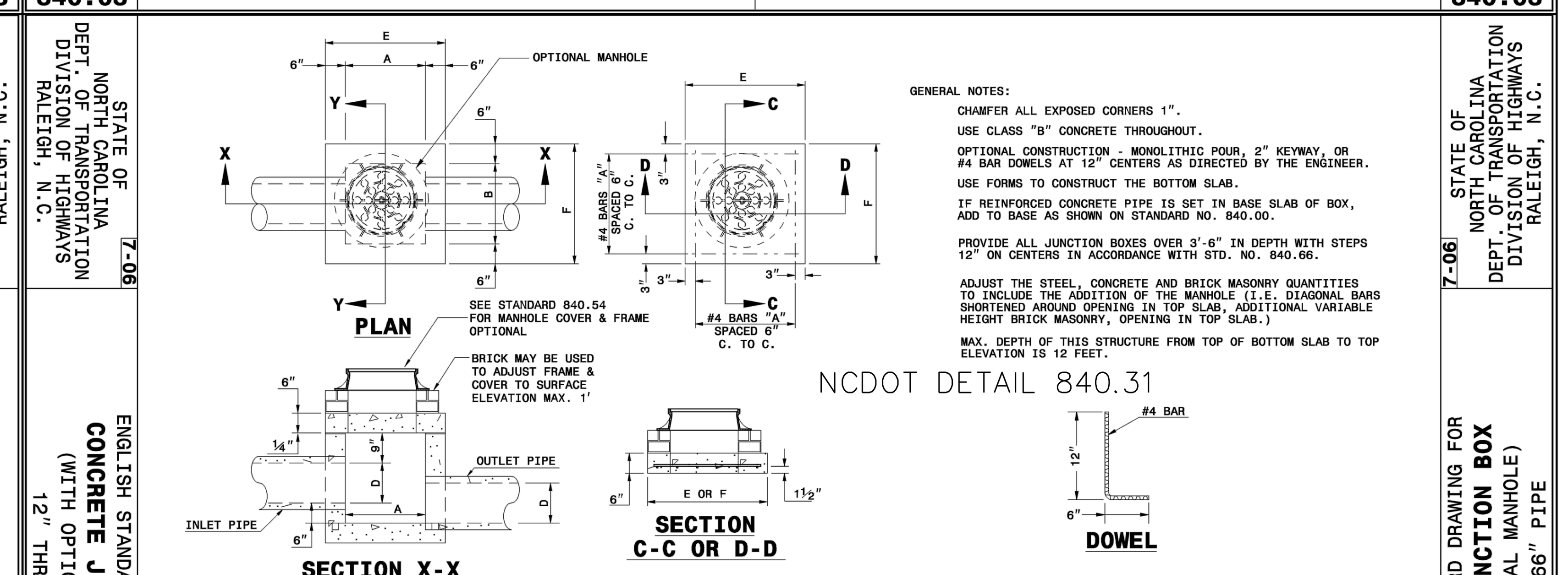

DIMENSIONS AND QUANTITIES FOR CONCRETE JUNCTION BOXES														
DIMENSIONS OF BOX AND PIPE				REINFORCEMENT BARS "A"		TOP SLAB DIMENSIONS		CUBIC YARDS IN BOX			TOTAL QUANTITIES BOX AND SLABS		DEDUCTIONS FOR ONE PIPE CU.YDS.	
PIPE	SPAN	WIDTH	HEIGHT											
D	A	B	H	NO.	LENGTH	E	F	TOP SLAB	BOTTOM SLAB	WALL/ FT. OF HT.	LBS. REINF	CU. YDS. MIN. "H"	C.S.	R.C.
12"	2'-0"	2'-0"	2'-3"	12	2'-9"	3'-0"	3'-0"	0.167	0.167	0.185	22	0.750	0.015	0.024
15"	2'-3"	2'-3"	2'-6"	12	3'-0"	3'-3"	3'-3"	0.196	0.196	0.204	24	0.902	0.023	0.036
18"	2'-6"	2'-6"	2'-9"	14	3'-3"	3'-6"	3'-6"	0.227	0.227	0.222	30	1.065	0.033	0.049
24"	3'-0"	3'-0"	3'-3"	16	3'-9"	4'-0"	4'-0"	0.296	0.296	0.259	40	1.434	0.059	0.085
30"	3'-6"	3'-6"	3'-9"	18	4'-3"	4'-6"	4'-6"	0.375	0.375	0.296	51	1.860	0.092	0.127
36"	4'-0"	4'-0"	4'-3"	20	4'-9"	5'-0"	5'-0"	0.463	0.463	0.333	64	2.341	0.132	0.178
42"	4'-6"	4'-6"	4'-9"	22	5'-3"	5'-6"	5'-6"	0.560	0.560	0.370	77	2.878	0.180	0.243
48"	5'-4"	5'-4"	5'-3"	26	6'-3"	6'-4"	6'-4"	0.743	0.743	0.407	111	3.623	0.235	0.317
54"	5'-10"	5'-10"	5'-9"	28	6'-7"	6'-10"	6'-10"	0.865	0.865	0.444	126	4.283	0.297	0.401
60"	6'-6"	6'-6"	6'-3"	30	7'-3"	7'-6"	7'-6"	1.042	1.042	0.481	145	5.090	0.367	0.495
66"	7'-1"	7'-1"	6'-9"	32	7'-10"	8'-1"	8'-1"	1.210	1.210	0.518	169	5.917	0.444	0.589

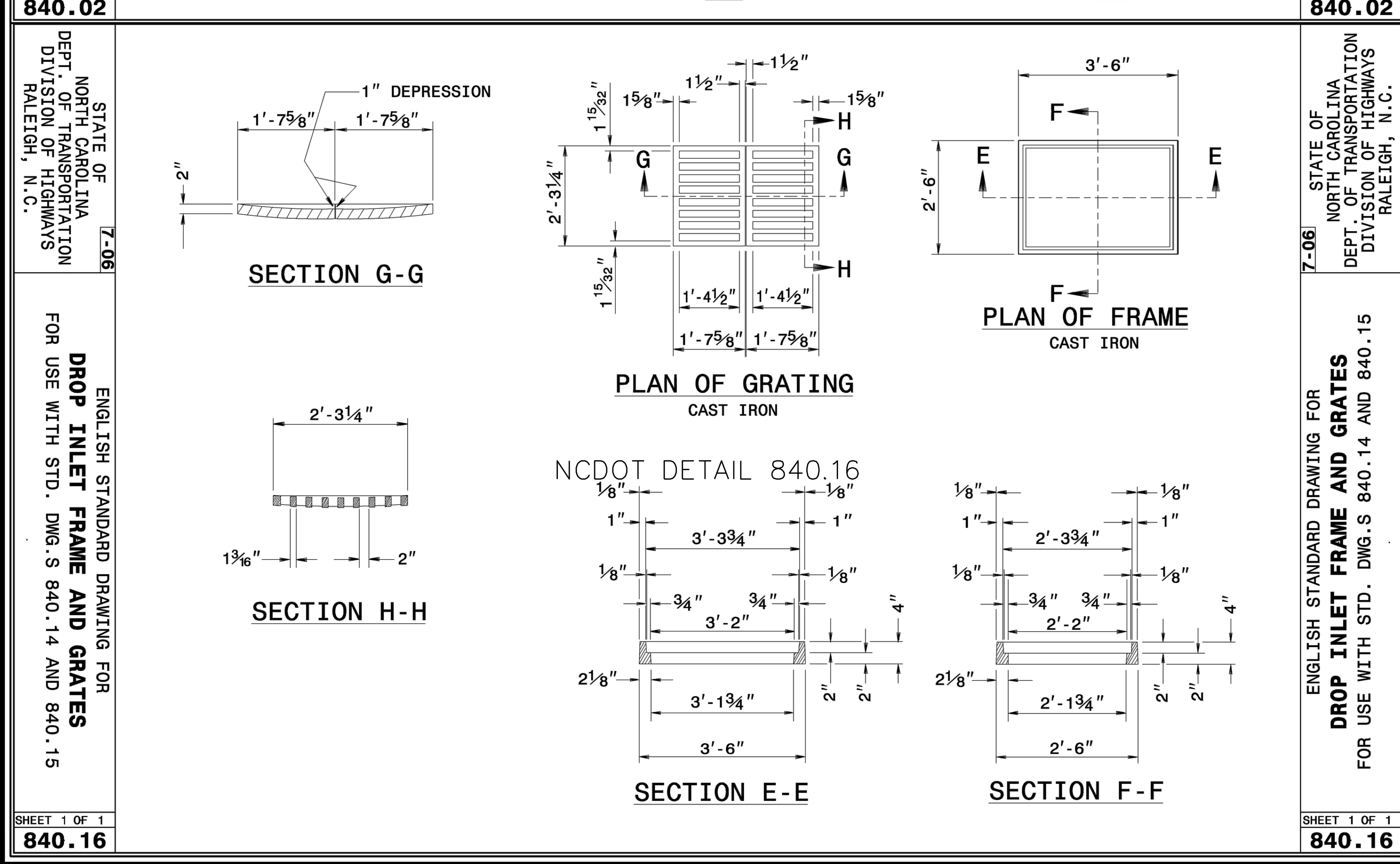

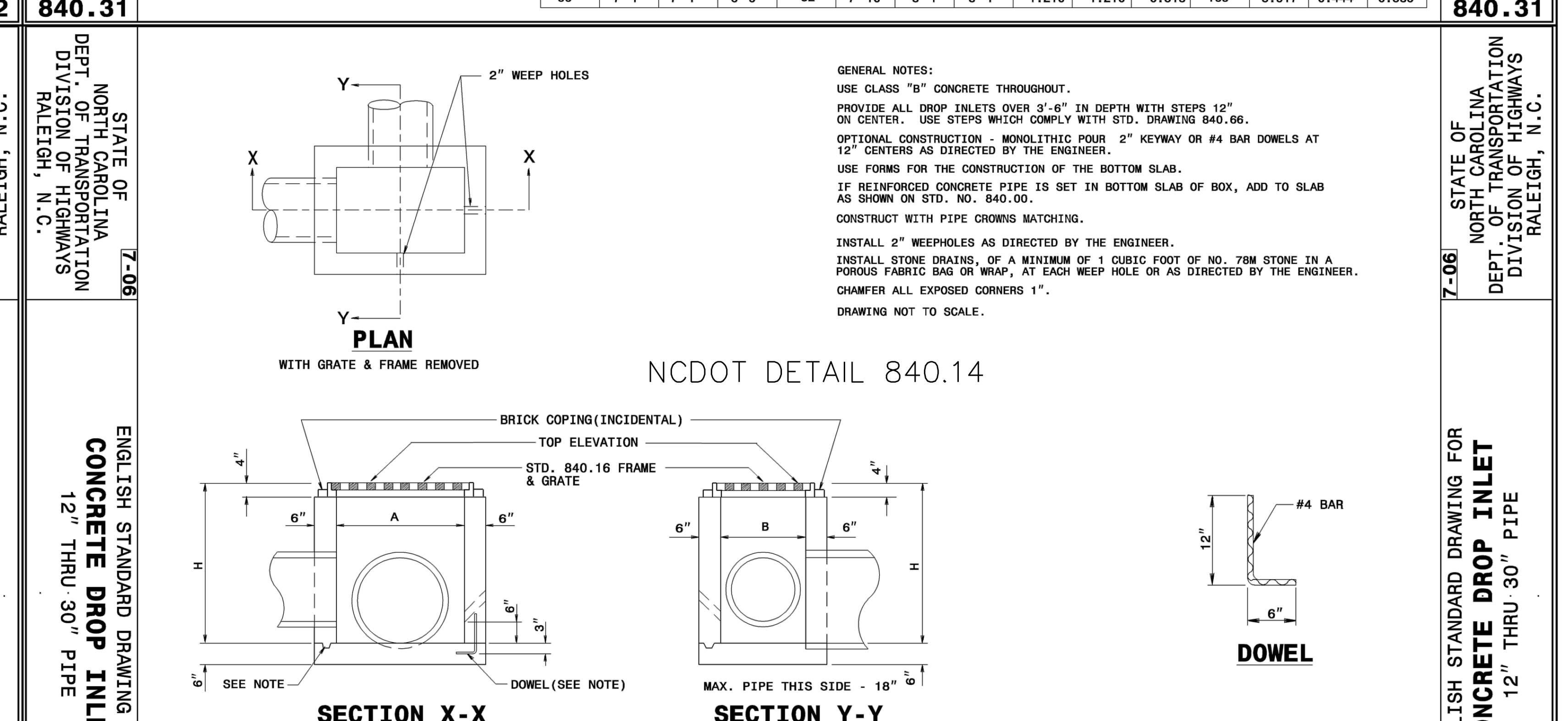

DIMENSIONS AND QUANTITIES FOR DROP INLET(BASED ON MIN. HEIGHT, H)								
DIMENSIONS OF BOX & PIPE				CUBIC YARDS CONC. IN BOX			DEDUCTIONS FOR ONE PIPE	
PIPE	SPAN	WIDTH	MIN. HEIGHT					
D	A	B	H	BOTTOM SLAB	WALL PER FT. HT.	TOTAL CONCRETE FOR MINIMUM HEIGHT, H	C.M.	R.C.
12"	3'-0"	2'-0"	2'-0"	0.222	0.222	0.592	0.015	0.026
15"			2'-3"			0.648	0.023	0.036
18"			2'-6"			0.703	0.033	0.049
24"			3'-0"			0.814	0.059	0.085
30"	3'-0"	2'-0"	3'-6"	0.222	0.222	0.925	0.092	0.127

SEQUENCE OF CONSTRUCTION

LIMITS OF CONSTRUCTION = 8.41 ACRES

1. INSTALL TEMPORARY CONSTRUCTION ENTRANCE AS SHOWN ON EROSION & SEDIMENT CONTROL PLAN.

2. INSTALL PERIMETER CONTROLS (TEMPORARY SILT FENCE, TREE PROTECTION FENCING, SEDIMENT BASIN) AS SHOWN ON THE EROSION & SEDIMENT CONTROL PLAN. THIS STEP NEEDS TO BE COMPLETED PRIOR TO UPSLOPE LAND DISTURBING ACTIVITIES.

3. THE PROPOSED INFILTRATION BASIN WILL ACT AS A SEDIMENT BASIN DURING CONSTRUCTION ACTIVITIES.

4. ONCE PERIMETER CONTROLS AND SEDIMENT TRAPPING MEASURES ARE INSTALLED CLEAR AND GRUB SITE WITHIN LIMITS OF DISTURBANCE. THE SEDIMENT BASIN WILL BE PUMPED DOWN BY MECHANICAL MEANS AS NEEDED TO MUCK OUT SEDIMENT WHEN THE SEDIMENT REACHES 50% CAPACITY.

5. UPON BRINGING THE SITE TO ROUGH GRADE, STABILIZE ALL AREAS WITH TEMPORARY VEGETATION IF LEFT UNDISTURBED FOR 15 WORKING DAYS AND ALL SLOPES WITHIN 21 CALENDAR DAYS.

6. ONCE THE PARKING AREAS, SANITARY SEWERS, WATERLINES AND STORM SEWERS ARE IN PLACE, INSTALL INLET PROTECTION AS SHOWN ON THE EROSION & SEDIMENT CONTROL PLAN.

7. UPON BRINGING THE PARKING AREA TO SUBGRADE ELEVATIONS, STABILIZE THE AREAS BY PLACING STONE BASE AS EARLY AS POSSIBLE

8. FOR TEMPORARY VEGETATIVE STABILIZATION OF ALL DENUDED AREAS SEE NOTE REFERENCING THE EROSION CONTROL PROGRAM AND SPECIFICATIONS ON SHEET C-1.

9. AFTER CONSTRUCTION OPERATIONS HAVE ENDED AND ALL DISTURBED AREAS HAVE BEEN STABILIZED, MECHANICAL SEDIMENT CONTROLS SHALL BE REMOVED. SEDIMENT FROM TEMPORARY SEDIMENT TRAPPING DEVICES SHALL BE DISPOSED OF BY SPREADING ON THE SITE OR HAULING AWAY IF NOT SUITABLE FOR FILL. ALL DENUDED AREAS ARE TO BE PERMANENTLY STABILIZED WITH PERMANENT VEGETATION.

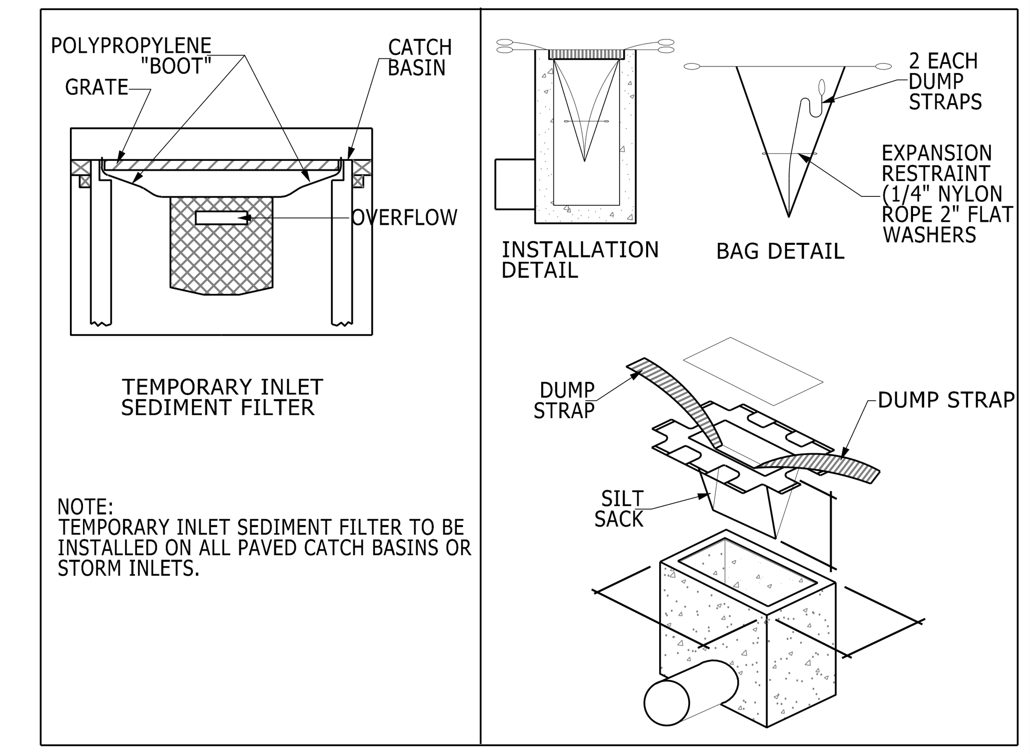

SILT SACK DETAIL

NOT TO SCALE

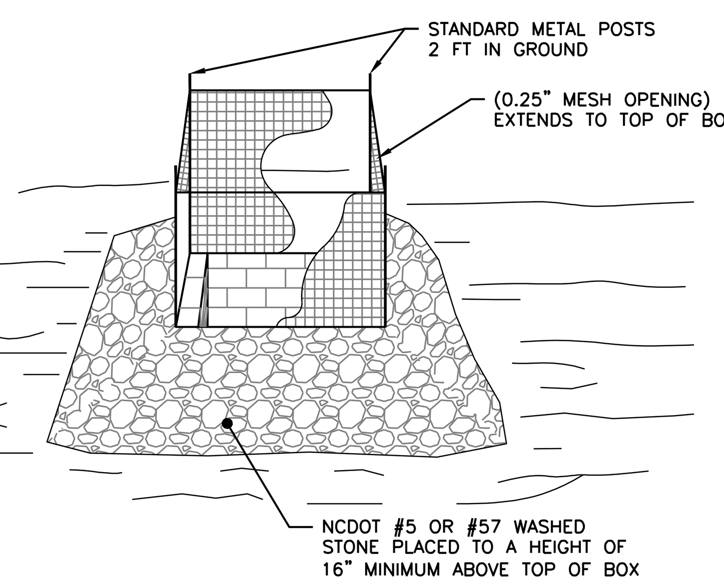

NOTES:

1. DRIVE 5-FOOT STEEL POSTS 2 FEET INTO THE GROUND SURROUNDING THE INLET. SPACE POSTS EVENLY AROUND THE PERIMETER OF THE INLET, A MAXIMUM OF 4 FEET APART.
2. SURROUND THE POSTS WITH WIRE MESH HARDWARE CLOTH. SECURE THE WIRE MESH TO THE STEEL POSTS AT THE TOP, MIDDLE, AND BOTTOM. PLACING A 1-FOOT FLAP OF THE WIRE MESH UNDER THE GRAVEL FOR ANCHORING IS RECOMMENDED.
3. PLACE CLEAN GRAVEL (NC DOT #5 OR #57 STONE) ON A 2:1 SLOPE WITH A MIN HEIGHT OF 16 INCHES AROUND THE WIRE, AND SMOOTH TO AN EVEN GRADE.

STANDARD INLET PROTECTION

NOT TO SCALE

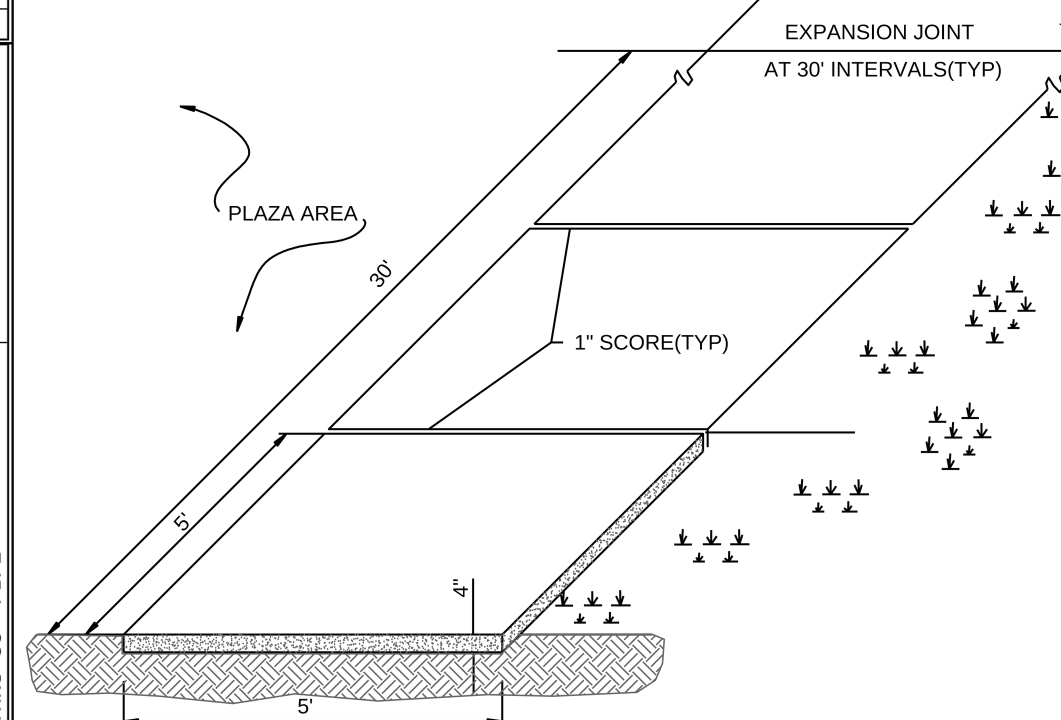

STANDARD SIDEWALK DETAIL

SD 8-15

NOT TO SCALE

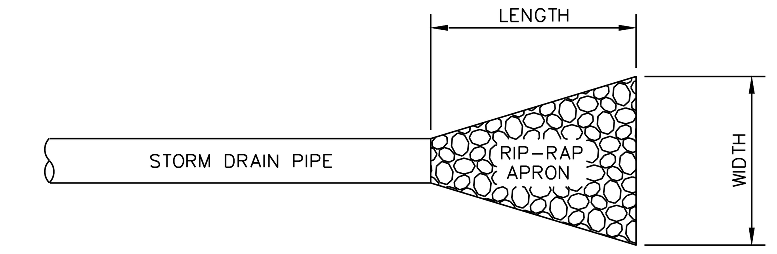

PLAN

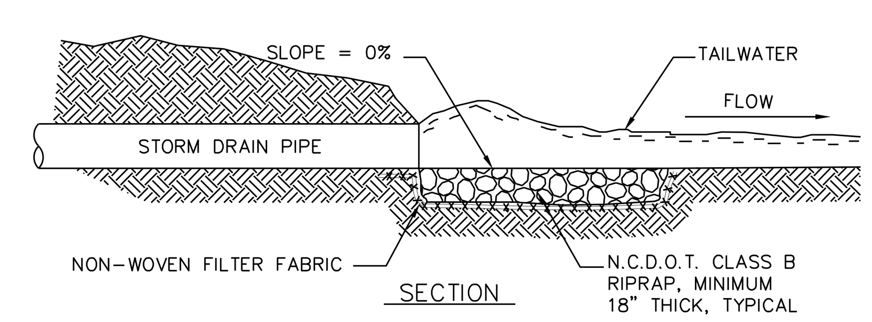

SECTION

RIPRAP LOCATIONS	LENGTH (FT.)	UPSTREAM WIDTH (FT.)	DOWNSTREAM WIDTH (FT.)
15" CULVERTS	3.75	5.0	7.5
18" CULVERTS	4.5	6.0	9.0
24" CULVERTS	6.0	8.0	12.0
60" CULVERTS	15.0	20.0	30.0

RIP-RAP OUTLET PROTECTION

N.T.S.

Approved Construction Plan

	Name	Date
Planning		
Traffic		
Fire		

For each open utility cut of City streets, a $325 permit shall be required from the City prior to occupancy and/or project acceptance.

CITY OF WILMINGTON NORTH CAROLINA
Public Services • Engineering Division
APPROVED STORMWATER MANAGEMENT PLAN
Date:__________ Permit #__________________
Signed: ______________________________

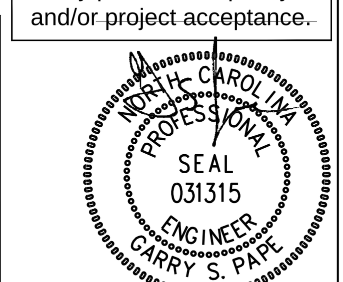

No.	Revision	Date	By

Designer: GSP | Scale: 1" = 30'
Drawn By: GSP | Date: JUNE 2014
License #: P-0718 | Job No.: 2014-0001

ELLINGTON FARMS

Wilmington New Hanover County North Carolina

STANDARD DETAILS

PREPARED FOR:
ELLINGTON FARMS APARTMENTS, LLC
6626-C GORDON ROAD
WILMINGTON, NC 28411
910-799-3006

GSP CONSULTING, PLLC
ENGINEERING
6626 Gordon Road Unit C Wilmington, North Carolina 28411 tel: 910-442-7870 fax: 910-799-6659

Sheet No. C-8

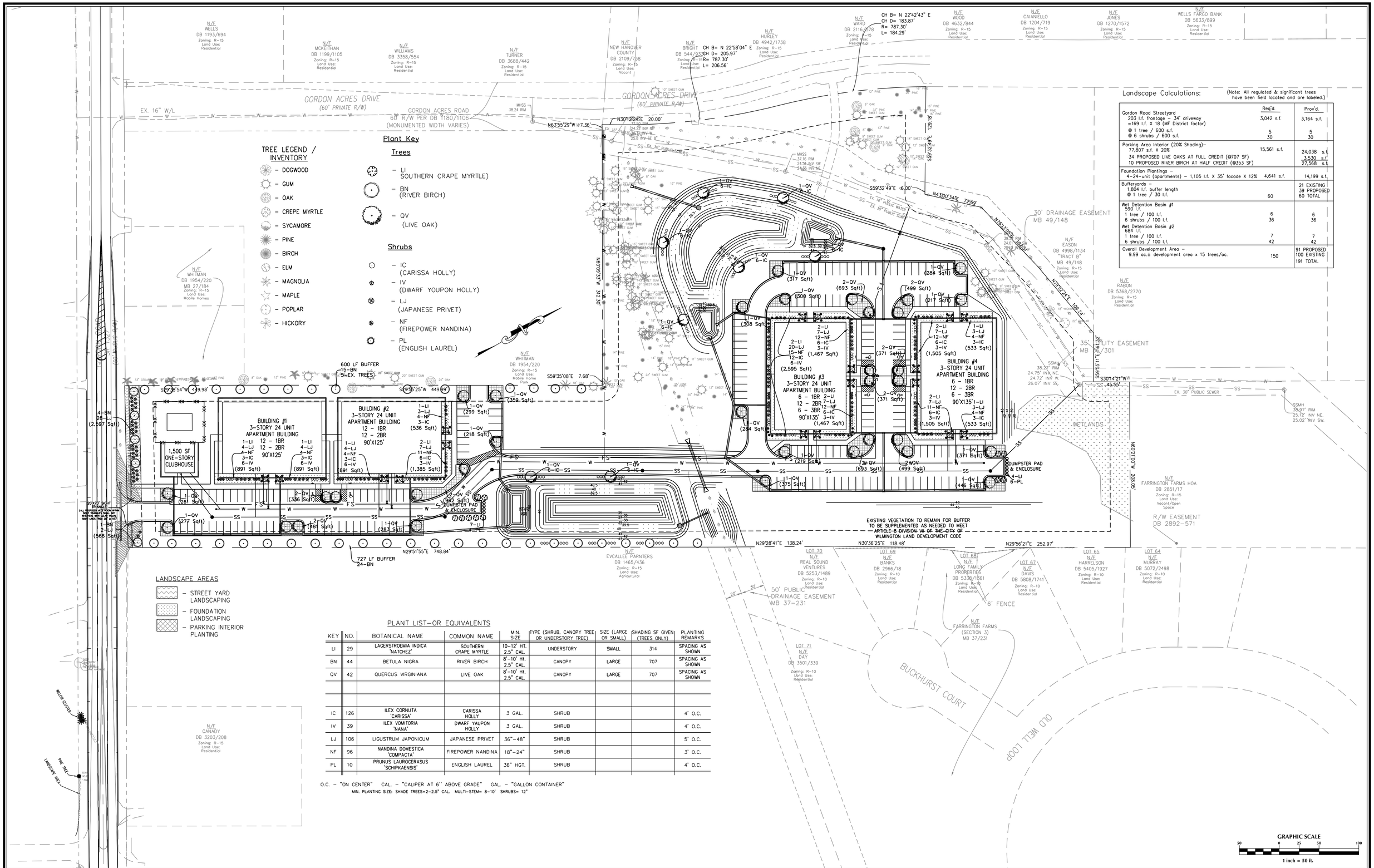

Landscape Calculations:

(Note: All regulated & significant trees have been field located and are labeled.)

	Req'd.	Prov'd.
Gordon Road Streetyard 203 l.f. frontage - 34' driveway =169 l.f. X 18 (MF District factor) @ 1 tree / 600 s.f. @ 6 shrubs / 600 s.f.	3,042 s.f. 5 30	3,164 s.f. 5 30
Parking Area Interior (20% Shading)- 77,807 s.f. X 20% 34 PROPOSED LIVE OAKS AT FULL CREDIT (@707 SF) 10 PROPOSED RIVER BIRCH AT HALF CREDIT (@353 SF)	15,561 s.f.	24,038 s.f. 3,530 s.f. 27,568 s.f.
Foundation Plantings - 4-24-unit (apartments) - 1,105 l.f. X 35' facade X 12%	4,641 s.f.	14,199 s.f.
Bufferyards - 1,804 l.f. buffer length @ 1 tree / 30 l.f.	 60	21 EXISTING 39 PROPOSED 60 TOTAL
Wet Detention Basin #1 590 l.f. 1 tree / 100 l.f. 6 shrubs / 100 l.f.	 6 36	 6 36
Wet Detention Basin #2 684 l.f. 1 tree / 100 l.f. 6 shrubs / 100 l.f.	 7 42	 7 42
Overall Development Area - 9.99 ac.± development area x 15 trees/ac.	150	91 PROPOSED 100 EXISTING 191 TOTAL

PLANT LIST-OR EQUIVALENTS

KEY	NO.	BOTANICAL NAME	COMMON NAME	MIN. SIZE	TYPE (SHRUB, CANOPY TREE OR UNDERSTORY TREE)	SIZE (LARGE OR SMALL)	SHADING SF GIVEN (TREES ONLY)	PLANTING REMARKS
LI	29	LAGERSTROEMIA INDICA 'NATCHEZ'	SOUTHERN CRAPE MYRTLE	10-12' HT. 2.5" CAL.	UNDERSTORY	SMALL	314	SPACING AS SHOWN
BN	44	BETULA NIGRA	RIVER BIRCH	8'-10' Ht. 2.5" CAL.	CANOPY	LARGE	707	SPACING AS SHOWN
QV	42	QUERCUS VIRGINIANA	LIVE OAK	8'-10' Ht. 2.5" CAL.	CANOPY	LARGE	707	SPACING AS SHOWN
IC	126	ILEX CORNUTA 'CARISSA'	CARISSA HOLLY	3 GAL.	SHRUB			4' O.C.
IV	39	ILEX VOMITORIA 'NANA'	DWARF YAUPON HOLLY	3 GAL.	SHRUB			4' O.C.
LJ	106	LIGUSTRUM JAPONICUM	JAPANESE PRIVET	36"-48"	SHRUB			5' O.C.
NF	96	NANDINA DOMESTICA 'COMPACTA'	FIREPOWER NANDINA	18"-24"	SHRUB			3' O.C.
PL	10	PRUNUS LAUROCERASUS 'SCHIPKAENSIS'	ENGLISH LAUREL	36" HGT.	SHRUB			4' O.C.

O.C. - "ON CENTER" CAL. - "CALIPER AT 6" ABOVE GRADE" GAL. - "GALLON CONTAINER"
MIN. PLANTING SIZE: SHADE TREES=2-2.5" CAL. MULTI-STEM= 8-10' SHRUBS= 12"

No.	Revision	Date	By

Designer GSP	Scale 1" = 50'
Drawn By GSP	Date JUNE 2014
License # P-0718	Job No. 2014-0001

ELLINGTON FARMS

Wilmington New Hanover County North Carolina

LANDSCAPE PLAN

PREPARED FOR:
ELLINGTON FARMS APARTMENTS, LLC
6626-C GORDON ROAD
WILMINGTON, NC 28411
910-799-3006

GSP CONSULTING, PLLC
ENGINEERING
6626 Gordon Road Unit C Wilmington, North Carolina 28411 tel: 910-442-7870 fax: 910-799-6659

Sheet No. L-1