SITE DEVELOPMENT PLAN

FOR

BELLE MEADE MIXED-USE

WILMINGTON, NORTH CAROLINA

MARCH 2015

VICINITY MAP

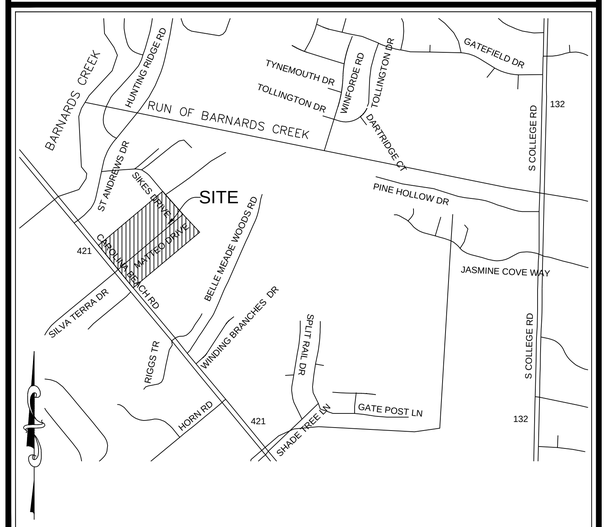

VICINITY MAP
(NTS)

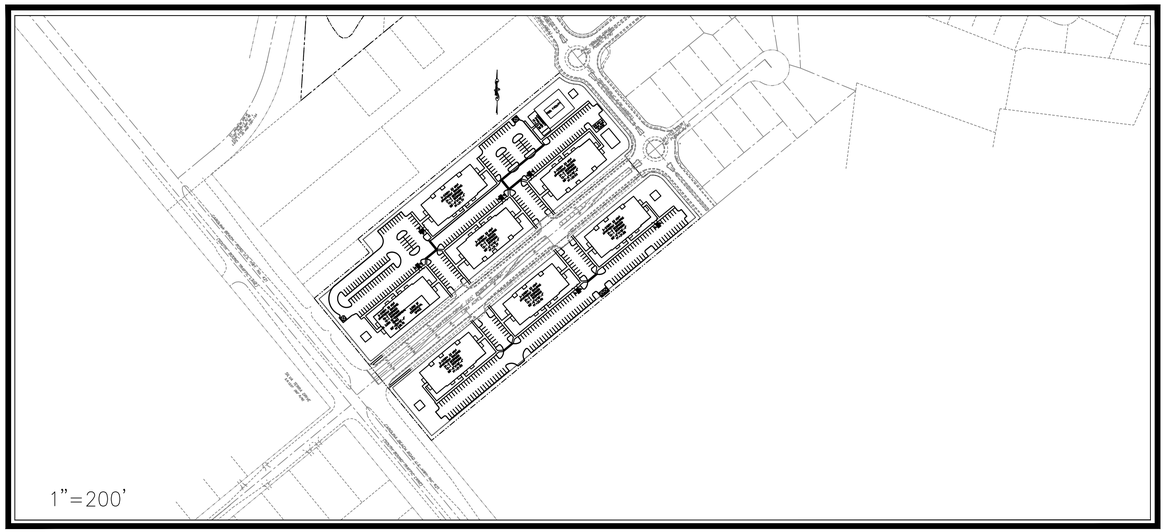

LEGEND

DESCRIPTION	EXISTING	PROPOSED
1' CONTOUR INTERVAL		
5' CONTOUR INTERVAL		
PROPERTY LINE		
ROADWAY CENTERLINE		
RIGHT OF WAY LIMITS		
EASEMENT LINE		
CURB & GUTTER		
SANITARY SEWER FACILITIES		
STORM SEWER FACILITIES		
WATERLINE		
FIRE HYDRANT ASSEMBLY		
WATERWAYS		N/A

	PROPOSED		
PROPOSED LOT AND S.F.	X		
OPEN SPACE LABEL	5,000 s.f.	STREET SIGN	
	Ⓐ		
OPEN SPACE		404 WETLANDS	
BUILDING SET BACKS		FLOW DIRECTION	
PRIVATE SANITARY SET BACKS			

DEVELOPER/OWNER

BELLE MEADE
DEVELOPMENT PARTNERS, LLC
6626-C GORDON ROAD
WILMINGTON, NC 28411
PHONE: (910) 799-3006

PREPARED BY:

GSP CONSULTING, PLLC

ENGINEERING

6626 Gordon Road, Unit C, Wilmington, North Carolina 28411 tel: 910-442-7870 fax: 910-799-6659 License # P-0718

INDEX OF SHEETS

SHT C-0	COVER SHEET
SHT C-1	GENERAL NOTES
SHT C-2	EXISTING CONDITIONS PLAN
SHT C-2.1	SITE INVENTORY PLAN
SHT C-3.1	OVERALL SITE PLAN
SHT C-3.2	SITE PLAN
SHT C-4	UTILITY PLAN
SHT C-4.1	UTILITY PROFILES
SHT C-5.1	OVERALL DRAINAGE PLAN
SHT C-5.2	GRADING, DRAINAGE & EROSION & SEDIMENT CONTROL PLAN
SHT C-6	EXISTING WET DETENTION BASIN DETAILS
SHT C-7	STANDARD DETAILS
SHT C-8	STANDARD DETAILS
SHT C-9	STANDARD DETAILS
SHT L-1	LANDSCAPE PLAN

For each open utility cut of City streets, a $325 permit shall be required from the City prior to occupancy and/or project acceptance.

CITY OF WILMINGTON NORTH CAROLINA
Public Services ● Engineering Division
APPROVED STORMWATER MANAGEMENT PLAN
Date:_____ Permit #_____
Signed: _____

SITE DATA TABLE

GENERAL NOTES:

1. NEW HANOVER COUNTY PARCEL NOS.:
   PIN 312408.99.9928.000 / PID R07000-004-004-000
   PIN 312520.90.9829.000 / PID R07000-004-001-000
   PIN 313517.00.5557.000 / PID R07100-003-005-000
   PIN 313517.00.6444.000 / PID R07100-003-007-000
   PIN 313517.00.7245.000 / PID R07100-003-008-000

   SITE ADDRESS: 4703 CAROLINA BEACH ROAD

2. TOTAL TRACT AREA: 14.46 AC.± (629,853 S.F.)

3. ZONING DISTRICT: CB (CDMU)

REQ'D.		PROV'D	
SETBACKS –	20' FRONT	SETBACKS –	20' FRONT
	35' REAR*		35' REAR*
	10' SIDE		10' SIDE

   * (ADJACENT TO RESIDENTIAL ZONED PROPERTY)

4. CAMA LAND CLASSIFICATION: URBAN

5. THERE ARE NO WETLANDS LOCATED ON THIS PROPERTY.

6. THIS PROPERTY IS NOT WITHIN A SPECIAL FLOOD HAZARD ZONE PER FEMA FLOOD INSURANCE RATE MAP #3720313500J, REVISED DATE 04/03/06

DEVELOPMENT DATA:

TOTAL TRACT AREA = 10.93 AC.

DEVELOPMENT AREA – 10.93 AC.
PROPOSED DENSITY 228 UNITS – 20.86 UNITS/AC

BUILDING COVERAGE – 105,800 S.F. (22.2%)
(7–3 STORY) @ 80.5' X 178.33' + BATHHOUSE + MAINTENANCE BLDG + COMMERCIAL SPACE

TOTAL GROSS FLOOR AREA – 310,284 S.F. GFA
COMMERCIAL = 3,800 S.F.±
APARTMENTS = 306,484 S.F.±
310,284 SF (65.2%)

TOTAL BEDROOMS – 372
84 X 1 BR = 84 BR
144 X 2 BR = 288 BR

MAX. BLDG. HGT. – 3–STORY / 35' MEAN ROOF
PROPOSED – 35' MEAN ROOF

PARKING –
84 – 1 BR UNITS X 1.5 MIN. SP./UNIT = 126
144 – 2 BR UNITS X 2.0 MIN. SP./UNIT = 288
3,800 SF COMMERCIAL – 1 SP./400 SF = 10
MINIMUM TOTAL SPACES REQ'D. = 424
84 – 1 BR UNITS X 2.5 MAX. SP./UNIT = 210
144 – 2 BR UNITS X 2.5 MAX. SP./UNIT = 360
3,800 SF COMMERCIAL – 1 SP./200 SF = 19
MAXIMUM TOTAL SPACES PREMIT'D. = 589
** 425 TOTAL SPACES PROV'D. (12 H/C) **
PER ADA REGS FOR PARKING FACILITY WITH 401–500 SPACES 9 H/C SPACES REQUIRED
BIKE PARKING REQ'D = 5 MIN/100 SPACES
BIKE PARKING PROV'D = 22

NEW IMPERVIOUS SURFACES –

ROOFTOP –	105,800 S.F.
ASPHALT PAVEMENT –	147,227 S.F.
CONCRETE –	28,622 S.F.
FUTURE –	10,809 S.F.
NEW TOTAL –	292,458 S.F. (61.4%)

UTILITY CAPACITY REQUESTS:
PROPOSED SEWER CAPACITY –
228 UNITS @ 240 GPD/BR + 3,800 SF COMMERCIAL SPACE @ 60 GPD/100SF + 100 PERSON CLUBHOUSE @ 10 GPD/PERSON
= 54,720 GPD + 2,280 GPD + 1,000 GPD = 58,000 GPD
PROPOSED WATER CAPACITY –
228 UNITS @ 400 GPD/BR + 3,800 SF COMMERCIAL SPACE @ 60 GPD/100SF + 100 PERSON CLUBHOUSE @ 10 GPD/PERSON
= 91,200 GPD + 2,280 GPD + 1,000 GPD = 94,480 GPD

Approved Construction Plan

Name	Date
Planning	
Traffic	
Fire	

NORTH CAROLINA PROFESSIONAL SEAL 031315 ENGINEER CARRY S. PAPE
03/28/2015

NOTE:
ALL DESIGN AND CONSTRUCTION SHALL BE IN CONFORMANCE WITH THE CITY OF WILMINGTON LAND DEVELOPMENT CODE, TECHNICAL STANDARDS MANUAL & THE STATE OF NORTH CAROLINA

PROJECT NAME: BELLE MEADE APARTMENTS
GSP CONSULTING PROJECT #: 2014-0006

COORDINATION NOTES

1. THE CONTRACTOR IS REQUIRED TO OBTAIN ANY/ALL PERMITS REQUIRED FOR CONSTRUCTION OF THESE PLANS.
2. ALL WORK IS TO BE IN ACCORDANCE WITH CITY OF WILMINGTON, NEW HANOVER COUNTY, THE CAPE FEAR PUBLIC UTILITY AUTHORITY (CFPUA) AND THE STATE OF NORTH CAROLINA.
3. THE CONTRACTOR IS TO ESTABLISH AND CHECK ALL HORIZONTAL AND VERTICAL CONTROLS TO BE USED WITH THE PROJECT. IN ADDITION, THE CONTRACTOR IS TO COMPUTE THE LAYOUT OF THE ENTIRE SITE PLAN IN ADVANCE OF BEGINNING ANY WORK ASSOCIATED WITH THE SUBJECT PLANS. CONTRACTOR SHALL EMPLOY A PROFESSIONAL SURVEYOR TO PERFORM SITE IMPROVEMENT STAKEOUT(S).
4. ANYTIME WORK IS PERFORMED OFF-SITE OR WITHIN AN EXISTING EASEMENT, THE CONTRACTOR IS TO NOTIFY THE HOLDER OF SAID EASEMENT AS TO THE NATURE OF PROPOSED WORK, AND TO FOLLOW ANY GUIDELINES OR STANDARDS WHICH ARE ASSOCIATED WITH OR REFERENCED IN THE RECORDED EASEMENT.

GENERAL NOTES:

1. EXISTING TOPOGRAPHY, BOUNDARY AND UTILITIES, HAVE BEEN PREPARED BY FIELD SURVEY BY MICHAEL UNDERWOOD & ASSOCIATES, PA., PREVIOUSLY APPROVED PLANS AND OTHER AVAILABLE INFORMATION.
2. REASONABLE CARE HAS BEEN EXERCISED IN SHOWING THE LOCATION OF EXISTING UTILITIES ON THE PLANS. THE EXACT LOCATION OF ALL EXISTING UTILITIES IS NOT KNOWN IN ALL CASES. THE CONTRACTOR SHALL EXPLORE THE AREA AHEAD OF DITCHING OPERATIONS BY OBSERVATIONS, ELECTRONIC DEVICES, HAND DIGGING AND BY PERSONAL CONTACT WITH THE UTILITY COMPANIES. IN ORDER TO LOCATE EXISTING UTILITIES IN ADVANCE OF TRENCHING OPERATIONS SO AS TO ELIMINATE OR MINIMIZE DAMAGE TO EXISTING UTILITIES. THE CONTRACTOR SHALL BE RESPONSIBLE FOR ALL COSTS RESULTING FROM ANY DAMAGE TO THE EXISTING UTILITY LINES INCLUDING LOSS OF UTILITY REVENUES. CONTRACTOR SHALL ARRANGE FOR TEMPORARY SUPPORT OF EXISTING UTILITIES, SUCH AS POLES, CONDUITS, FIBER OPTIC CABLES, TELEPHONE CABLES, WATER LINES, ETC...
3. CONTRACTOR SHALL COMPLY WITH THE LATEST REVISIONS AND INTERPRETATIONS OF THE DEPARTMENT OF LABOR SAFETY AND HEALTH REGULATIONS FOR CONSTRUCTION PROMULGATED UNDER THE OCCUPATIONAL SAFETY AND HEALTH ACT.
4. CONTRACTOR SHALL PLAN AND CONSTRUCT WORK SO AS TO CAUSE MINIMUM INCONVENIENCE TO THE OWNER AND THE PUBLIC. THE CONTRACTOR SHALL PROVIDE, ERECT AND MAINTAIN AT ALL TIMES DURING THE PROGRESS OR TEMPORARY SUSPENSION OF WORK, SUITABLE BARRIERS, FENCES, SIGNS OR OTHER ADEQUATE PROTECTION, INCLUDING FLAGMEN AND WATCHMEN AS NECESSARY TO INSURE THE SAFETY OF THE PUBLIC AS WELL AS THOSE ENGAGED IN THE CONSTRUCTION WORK. CONSTRUCTION SIGNING SHALL BE IN ACCORDANCE WITH THE LATEST EDITION OF "CONSTRUCTION AND MAINTENANCE OPERATIONS SUPPLEMENT TO THE MANUAL ON UNIFORM TRAFFIC CONTROL DEVICES" BY THE DOT.
5. ALL MATERIAL CLEARED OR DEMOLISHED BY THE CONTRACTOR IN ORDER TO CONSTRUCT THE WORK SHALL BECOME THE PROPERTY OF THE CONTRACTOR AND SHALL BE PROPERLY DISPOSED OF OFF-SITE.
6. ALL WORK BY THE CONTRACTOR SHALL BE WARRANTED BY THE CONTRACTOR FOR A PERIOD OF ONE YEAR AFTER THE OWNER ACCEPTS THE WORK.
7. CONTRACTOR SHALL CALL THE NORTH CAROLINA ONE-CALL CENTER AT 1 (800) 632-4949 AND ALLOW THE CENTER TO LOCATE EXISTING UTILITIES BEFORE DIGGING.
8. CONTRACTOR SHALL REMOVE ASPHALT, AGGREGATE BASE COURSE, AND CONCRETE CURB & GUTTER WITHIN LIMITS OF DEMOLITION AS SHOWN ON PLAN.

DEMOLITION NOTES

1. CONTRACTOR TO COORDINATE WITH THE OWNER TO PROPERLY MAINTAIN OR RELOCATE EXISTING SERVICE CONNECTIONS WHEN NECESSARY
2. CONTRACTOR IS TO WALK THE SITE AND BECOME FAMILIAR WITH THE SCOPE OF DEMOLITION REQUIRED. ALL DEMOLITION WORK REQUIRED TO CONSTRUCT NEW SITE IMPROVEMENTS WILL BE PERFORMED BY THE CONTRACTOR AND WILL BE UNCLASSIFIED EXCAVATION.
3. DEMOLITION SHALL INCLUDE BUT IS NOT LIMITED TO THE EXCAVATION, HAULING AND OFFSITE DISPOSAL OF CONCRETE PADS, CONCRETE DITCHES, FOUNDATIONS, SLABS, STEPS, AND STRUCTURES; ABANDONED UTILITIES, BUILDINGS, PAVEMENTS AND ALL MATERIALS CLEARED AND STRIPPED TO THE EXTENT NECESSARY AS DIRECTED BY THE SOILS ENGINEER FOR THE INSTALLATION OF THE NEW IMPROVEMENTS AND WITHIN THE LIMITS OF CLEARING AND GRADING AND AS SHOWN ON THESE PLANS.
4. THE CONTRACTOR SHALL PROTECT ALL ADJACENT PROPERTY, STRUCTURES AND UTILITIES ON THE PROPERTY NOT TO BE DEMOLISHED. DAMAGE TO PROPERTIES OF OTHERS DUE TO THE CONTRACTOR'S ACTIVITIES SHALL BE REPLACED IN KIND BY THE CONTRACTOR AT NO COST TO OWNER.
5. ELECTRIC, TELEPHONE, SANITARY SEWER, WATER AND STORM SEWER UTILITIES THAT SERVICE OFF-SITE PROPERTIES SHALL BE MAINTAINED DURING THE CONSTRUCTION PROCESS BY THE CONTRACTOR.
6. EXISTING UTILITIES NOT INTENDED FOR DEMOLITION SHALL BE MAINTAINED, PROTECTED AND UNDISTURBED DURING DEMOLITION
7. ALL EXISTING IMPROVEMENTS INDICATED OR REQUIRED TO BE DEMOLISHED SHALL INCLUDE REMOVAL FROM THE PROPERTY AND PROPER DISPOSAL.
8. CONTRACTOR SHALL COORDINATE RELOCATION OF ALL EXISTING OVER HEAD AND UNDERGROUND UTILITIES INCLUDING CABLE, GAS, TELEPHONE AND ELECTRIC AND ANY OTHER UTILITIES THROUGH THE SITE WITH THE RESPECTIVE COMPANIES.
9. PROVIDE SMOOTH SAW CUT OF EXISTING PAVEMENTS, CURBS AND GUTTERS AND SIDEWALKS TO BE DEMOLISHED.
10. ALL DEMOLITION WORK SHALL BE DONE IN STRICT ACCORDANCE WITH LOCAL, STATE AND FEDERAL REGULATIONS AS WELL AS OSHA REGULATIONS.
11. INFORMATION CONCERNING UNDERGROUND UTILITIES WAS OBTAINED FROM AVAILABLE RECORDS, BUT THE THE CONTRACTOR MUST DETERMINE THE EXACT LOCATION AND ELEVATIONS OF THE MAINS BY DIGGING TEST PITS BY HAND.

EROSION AND SEDIMENT CONTROL NOTES

GENERAL NOTES:

1. CLEAR AND REMOVE FROM SITE ALL TREES, ROOTS, ROOT MAT, ETC. FROM THE AREA WITHIN DESIGNATED CLEARING LIMITS.
2. PLANT GRASS OVER ALL GRADED AREAS AS SHOWN IN THE TABLE ON THIS SHEET OF CEASE OF ANY GRADING ACTIVITY.
3. CONTRACTOR SHALL BE RESPONSIBLE FOR CLEANING AND RESTORING TO PRE-CONSTRUCTION CONDITIONS ANY AREAS OUTSIDE THE PROJECT LIMITS THAT MAY INADVERTENTLY BE DAMAGED DUE TO THE FAILURE OF THE EROSION MEASURES
4. DURING GRADING AND AFTER GRADING HAS BEEN COMPLETED, CONTRACTOR SHALL CONTINUE TO MAINTAIN PERMANENT AND TEMPORARY EROSION CONTROL MEASURES UNTIL FINAL INSPECTION AND APPROVAL BY NEW HANOVER COUNTY.
5. WATER, FERTILIZE, MOW AND MAINTAIN SPRIGGED, SODDED AND PLANTED AREAS UNTIL FINAL APPROVAL BY NEW HANOVER COUNTY.
6. ANY BORROW MATERIAL BROUGHT ONTO SITE MUST BE FROM A LEGALLY OPERATED MINE OR OTHER APPROVED SOURCE.
7. ANY EXCESS MATERIAL REMOVED FROM SITE MUST BE HAULED TO A LEGALLY OPERATED MINE OR OTHER APPROVED SOURCE.

MAINTENANCE PLAN

ALL EROSION AND SEDIMENT CONTROL MEASURES WILL BE CHECKED FOR STABILITY AND OPERATION FOLLOWING EVERY RUNOFF-PRODUCING RAINFALL, BUT IN NO CASE, LESS THAN ONCE EVERY WEEK AND WITHIN 24 HOURS OF EVERY HALF INCH RAINFALL.

ALL POINTS OF EGRESS WILL HAVE CONSTRUCTION ENTRANCES THAT WILL BE PERIODICALLY TOP-DRESSED WITH AN ADDITIONAL 2 INCHES OF #4 STONE TO MAINTAIN PROPER DEPTH. THEY WILL BE MAINTAINED IN A CONDITION TO PREVENT MUD OR SEDIMENT FROM LEAVING THE SITE. IMMEDIATELY REMOVE OBJECTIONABLE MATERIAL SPILLED WASHED OR TRACKED ONTO THE CONSTRUCTION ENTRANCE OR ROADWAYS.

SEDIMENT WILL BE REMOVED FROM HARDWARE CLOTH AND GRAVEL INLET PROTECTION, BLOCK AND GRAVEL INLET PROTECTION, ROCK DOUGHNUT INLET PROTECTION AND ROCK PIPE INLET PROTECTION WHEN THE DESIGNED STORAGE CAPACITY HAS BEEN HALF FILLED WITH SEDIMENT. ROCK WILL BE CLEANED OR REPLACED WHEN THE SEDIMENT POOL NO LONGER DRAINS AS DESIGNED. DEBRIS WILL BE REMOVED FROM THE ROCK AND HARDWARE CLOTH TO ALLOW PROPER DRAINAGE. SILT SACKS WILL BE EMPTIED ONCE A WEEK AND AFTER EVERY RAIN EVENT. SEDIMENT WILL BE REMOVED FROM AROUND BEAVER DAMS, DANDY SACKS AND SOCKS ONCE A WEEK AND AFTER EVERY RAIN EVENT.

DIVERSION DITCHES WILL BE CLEANED OUT IMMEDIATELY TO REMOVE SEDIMENT OR OBSTRUCTIONS FROM THE FLOW AREA. THE DIVERSION RIDGES WILL ALSO BE REPAIRED. SWALES MUST BE TEMPORARILY STABILIZED WITHIN 21 CALENDAR DAYS OF CEASE OF ANY PHASE OF ACTIVITY ASSOCIATED WITH A SWALE.

SEDIMENT WILL BE REMOVED FROM BEHIND THE SEDIMENT FENCE WHEN IT BECOMES HALF FILLED. THE SEDIMENT FENCE WILL BE REPAIRED AS NECESSARY TO MAINTAIN A BARRIER. STAKES MUST BE STEEL. STAKE SPACING WILL BE 6 FEET MAX. WITH THE USE OF EXTRA STRENGTH FABRIC, WITHOUT WIRE BACKING, STAKE SPACING WILL BE 8 FEET MAX. WHEN STANDARD STRENGTH FABRIC AND WIRE BACKING ARE USED. IF ROCK FILTERS ARE DESIGNED AT LOW POINTS IN THE SEDIMENT FENCE THE ROCK WILL BE REPAIRED OR REPLACED IF IT BECOMES HALF FULL OF SEDIMENT, NO LONGER DRAINS AS DESIGNED OR IS DAMAGED.

SEDIMENT WILL BE REMOVED FROM SEDIMENT TRAPS WHEN THE DESIGNED STORAGE CAPACITY HAS BEEN HALF FILLED WITH SEDIMENT. THE ROCK WILL BE CLEANED OR REPLACED WHEN THE SEDIMENT POOL NO LONGER DRAINS OR WHEN THE ROCK IS DISLODGED. BAFFLES WILL BE REPAIRED OR REPLACED IF THEY COLLAPSE, TEAR, DECOMPOSE OR BECOME INEFFECTIVE. THEY WILL BE REPLACED PROMPTLY. SEDIMENT WILL BE REMOVED WHEN DEPOSITS REACH HALF THE HEIGHT OF THE 1ST BAFFLE.

SEDIMENT WILL BE REMOVED FROM THE SEDIMENT BASIN WHEN THE DESIGN STORAGE CAPACITY HAS BEEN HALF FILLED WITH SEDIMENT. ROCK WILL BE CLEANED OR REPLACED WHEN THE SEDIMENT POOL NO LONGER DRAINS OR IF THE ROCK IS DISLODGED. BAFFLES WILL BE REPAIRED OR REPLACED IF THEY COLLAPSE, TEAR, DECOMPOSE OR BECOME INEFFECTIVE. THEY WILL BE REPLACED PROMPTLY. SEDIMENT WILL BE REMOVED FROM BAFFLES WHEN DEPOSITS REACH HALF THE HEIGHT OF THE 1ST BAFFLE. FLOATING SKIMMERS WILL BE INSPECTED WEEKLY AND WILL BE KEPT CLEAN.

ALL SEEDED AREAS WILL BE FERTILIZED, RESEEDED AS NECESSARY AND MULCHED ACCORDING TO SPECIFICATIONS IN THE VEGETATIVE PLAN TO MAINTAIN A VIGOROUS, DENSE VEGETATIVE COVER. ALL SLOPES WILL BE STABILIZED WITHIN 21 CALENDAR DAYS. ALL OTHER AREAS WILL BE STABILIZED WITHIN 15 WORKING DAYS.

FLOCCULANTS WILL BE USED TO ADDRESS TURBIDITY ISSUES. THE PUMPS, TANKS, HOSES AND INJECTION SYSTEMS WILL BE CHECKED FOR PROBLEMS OR TURBID DISCHARGES DAILY.

STABILIZATION NOTES

1. ALL DISTURBED AREAS WILL BE STABILIZED WITHIN 15 WORKING DAYS OF CEASE OF ANY PHASE OF ACTIVITY AND SLOPES WITHIN 21 CALENDAR DAYS.

PERMANENT SEEDING SCHEDULE - MIXTURE 5CP

SPECIES	RATE (LB/ACRE)
CENTIPEDE GRASS	10-20

Seeding Dates
MARCH - JUNE

Soil Amendments
APPLY LIME AND FERTILIZER ACCORDING TO SOIL TESTS, OR APPLY 300 LB/ACRE 10-10-10 FERTILIZER.

Mulch
DO NOT MULCH.

Maintenance
FERTILIZE VERY SPARINGLY LB/ACRE NITROGEN IN SPRING WITH NO PHOSPHORUS.
CENTIPEDE GRASS CANNOT TOLERATE HIGH PH OR EXCESS FERTILIZER.

TEMPORARY SEEDING-LATE WINTER/EARLY SPRING

WINTER AND EARLY SPRING

SPECIES	RATE (LB/ACRE)
Rye (GRAIN)	120
*ANNUAL LESPEDEZA (KOBE IN PIEDMONT AND COASTAL PLAIN, KOREAN IN MOUNTAINS)	50

*OMIT ANNUAL LESPEDEZA WHEN DURATION OF TEMPORARY COVER IS NOT TO EXTEND BEYOND JUNE.

SUMMER

SPECIES	RATE (LB/ACRE)
GERMAN MILLET	40

FALL

SPECIES	RATE (LB/ACRE)
RYE (GRAIN)	120

Seeding dates
COASTAL PLAIN - DEC.1-APR. 15 - LATE WINTER AND EARLY SPRING
APRIL 15 - AUG. 15 - SUMMER
AUG. 15 - DEC. 30 - FALL

Soil amendments
FOLLOW RECOMMENDATIONS OF SOIL TESTS OR APPLY 2,000 LB/ACRE GROUND AGRICULTURAL LIMESTONE AND 750 LB/ACRE 10-10-10 FERTILIZER.

Mulch
APPLY 4,000 LB/ACRE STRAW. ANCHOR STRAW BY TACKING WITH ASPHALT, NETTING OR A MULCH ANCHORING TOOL. A DISK WITH BLADES SET NEARLY STRAIGHT CAN BE USED AS A MULCH ANCHORING TOOL.

Maintenance
REFERTILIZE IF GROWTH IS NOT FULLY ADEQUATE. RESEED, REFERTILIZE AND MULCH IMMEDIATELY FOLLOWING EROSION OR OTHER DAMAGE.

GENERAL GRADING NOTES

1. REASONABLE CARE HAS BEEN EXERCISED IN SHOWING THE LOCATION OF EXISTING UTILITIES ON THE PLANS. THE EXACT LOCATION OF SUCH UTILITIES IS NOT KNOWN IN ALL CASES. THE CONTRACTOR SHALL EXPLORE THE AREA AHEAD OF THE DITCHING OPERATION BY OBSERVATIONS, ELECTRONIC DEVICES, HAND DIGGING AND BY PERSONAL CONTACT WITH THE UTILITY COMPANIES IN ORDER TO LOCATE EXISTING UTILITIES IN ADVANCE OF THE TRENCHING OPERATIONS SO AS TO AVOID AND PREVENT DAMAGE TO THE EXISTING UTILITIES. CONTRACTOR SHALL BE RESPONSIBLE FOR ALL COST RESULTING FROM ANY DAMAGE TO THE EXISTING UTILITY LINES INCLUDING BUT NOT LIMITED TO REPAIRS AND LOSS SERVICE REVENUE. CONTRACTOR SHALL ARRANGE FOR TEMPORARY SUPPORT OF EXISTING UTILITIES, SUCH AS POLES, CONDUITS, FIBER OPTIC CABLES, TELEPHONE CABLES, WATER LINES, ETC...
2. CONTRACTOR SHALL COMPLY WITH THE LATEST REVISIONS AND INTERPRETATIONS OF THE DEPARTMENT OF LABOR SAFETY AND HEALTH REGULATIONS FOR CONSTRUCTION PROMULGATED UNDER THE OCCUPATIONAL SAFETY AND HEALTH ACT.
3. CONTRACTOR SHALL PLAN AND CONSTRUCT WORK SO AS TO CAUSE MINIMUM INCONVENIENCE TO THE OWNER AND THE PUBLIC. THE CONTRACTOR SHALL PROVIDE, ERECT AND MAINTAIN AT ALL TIMES DURING THE PROGRESS OR TEMPORARY SUSPENSION OF WORK, SUITABLE BARRIERS, FENCES, SIGNS OR OTHER ADEQUATE PROTECTION, INCLUDING FLAG MEN AND WATCHMEN AS NECESSARY TO INSURE THE SAFETY OF THE PUBLIC AS WELL AS THOSE ENGAGED IN THE CONSTRUCTION WORK. CONSTRUCTION SIGNING SHALL BE IN ACCORDANCE WITH THE LATEST EDITION OF "CONSTRUCTION AND MAINTENANCE OPERATIONS SUPPLEMENT TO THE MANUAL ON UNIFORM TRAFFIC CONTROL DEVICES" BY THE NCDOT.
4. ALL MATERIAL CLEARED AND GRUBBED BY THE CONTRACTOR IN ORDER TO CONSTRUCT THE WORK, SUCH AS TREES, VEGETATION, FENCING, ETC... SHALL BECOME THE PROPERTY OF THE CONTRACTOR AND SHALL BE PROPERLY DISPOSED OF OFF-SITE OR BURNED IF PROPER PERMITS ARE RECEIVED.

SITE NOTES

1. ANY DISCREPANCY IN THIS PLAN AND ACTUAL FIELD CONDITIONS SHALL BE REPORTED TO THE OWNER PRIOR TO START OF CONSTRUCTION. GENERAL CONTRACTOR SHALL BE RESPONSIBLE FOR VERIFICATION OF ALL SETBACKS, EASEMENTS AND DIMENSIONS SHOWN HEREON BEFORE BEGINNING CONSTRUCTION.
2. THE GENERAL CONTRACTOR SHALL CONTACT ALL OWNERS OF EASEMENTS, UTILITIES AND R.O.W.'S PUBLIC OR PRIVATE, PRIOR TO WORKING IN THESE AREAS.
3. CONTRACTOR SHALL MAINTAIN THE SITE IN A MANNER SO THAT WORKMEN AND PUBLIC SHALL BE PROTECTED FROM INJURY, AND ADJOINING PROPERTY PROTECTED FROM DAMAGE.
4. ACCESS TO UTILITIES, FIRE HYDRANTS, STREET LIGHTING, ETC., SHALL REMAIN UNDISTURBED, UNLESS COORDINATED WITH THE RESPECTIVE UTILITY.
5. DO NOT SCALE THIS DRAWING AS IT IS A REPRODUCTION AND SUBJECT TO DISTORTION.
6. THE GENERAL CONTRACTOR SHALL REMOVE ALL DEBRIS FROM THE SITE UPON COMPLETION OF THE PROJECT AND AT LEAST ONCE A WEEK DURING CONSTRUCTION.
7. THE GENERAL CONTRACTOR SHALL KEEP THE AREA OUTSIDE THE "CONSTRUCTION LIMITS" BROOM CLEAN AT ALL TIMES.
8. CONTRACTOR SHALL MAINTAIN AN "AS-BUILT" SET OF DRAWINGS TO RECORD THE EXACT LOCATION OF ALL PIPING PRIOR TO CONCEALMENT. DRAWINGS SHALL BE GIVEN TO THE OWNER UPON COMPLETION OF THE PROJECT WITH A COPY OF THE TRANSMITTAL LETTER TO THE ENGINEER.
9. IF DEPARTURES FROM THE SPECIFICATIONS OR DRAWINGS ARE DEEMED NECESSARY BY THE CONTRACTOR, DETAILS OF SUCH DEPARTURES AND REASONS THEREOF SHALL BE GIVEN TO THE OWNER FOR REVIEW, NO DEPARTURES FROM THE CONTRACT DOCUMENT SHALL BE MADE WITHOUT THE PERMISSION OF THE OWNER.
10. CONTRACTOR SHALL VERIFY LOCATION AND ELEVATION OF ALL UNDERGROUND UTILITIES. THE LOCATION OF ALL EXISTING UTILITIES ARE NOT NECESSARILY SHOWN ON PLANS AND WHERE SHOWN ARE ONLY APPROXIMATE. THE CONTRACTOR SHALL ON HIS INITIATIVE AND AT NO EXTRA COST HAVE LOCATED ALL UNDERGROUND LINES AND STRUCTURES AS NECESSARY. NO CLAIMS FOR DAMAGES OR EXTRA COMPENSATION SHALL ACCRUE TO THE CONTRACTOR FROM THE PRESENCE OF SUCH PIPE OTHER OBSTRUCTIONS OR FROM DELAY DUE TO REMOVAL OR REARRANGEMENT OF THE SAME. THE CONTRACTOR SHALL BE RESPONSIBLE FOR ANY DAMAGE TO UNDERGROUND STRUCTURES. CONTACT NORTH CAROLINA ONE CALL" TOLL FREE 1-800-632-4949 AT LEAST 48 HOURS PRIOR TO CONSTRUCTION. THE CONTRACTOR IS RESPONSIBLE FOR CONTACTING ALL NONSUBSCRIBING UTILITIES.
11. ALL PERMITS RELATIVE TO PROJECT MUST BE OBTAINED, PRIOR TO CONSTRUCTION
12. ALL CONSTRUCTION TO BE IN ACCORDANCE WITH PERMITS ISSUED AND APPLICABLE STATE, COUNTY, AND LOCAL CODES.
13. FOR BUILDING DIMENSIONS, SEE ARCHITECTURAL DRAWINGS.
14. ALL DIMENSIONS AND RADII ARE TO OUTSIDE FACE OF BUILDING OR TO FACE OF CURB UNLESS OTHERWISE NOTED.
15. THE CONTRACTOR SHALL OBTAIN AND PAY FOR ALL INSPECTIONS, CERTIFICATIONS, EQUIPMENT, ETC., THAT MAY BE REQUIRED.
16. THE ENGINEER AND/OR OWNER DISCLAIM ANY ROLE IN THE CONSTRUCTION MEANS AND METHODS ASSOCIATED WITH THE PROJECT AS SET FORTH IN THESE PLANS.

GENERAL STORM SEWER NOTES

1. ALL STORM SEWERS SHALL BE CONSTRUCTED IN ACCORDANCE WITH THE CITY OF WILMINGTON AND THE STATE OF NORTH CAROLINA REQUIREMENTS AS SPECIFIED ON THE DRAWINGS AND IN THE PROJECT SPECIFICATIONS.
2. BEDDING FOR ALL STORM SEWER PIPE SHALL BE AS SPECIFIED ON THE DRAWINGS, PROJECT SPECIFICATIONS, AND MANUFACTURER SPECIFICATIONS.
3. ALL STORM SEWER PIPES TO BE HDPE ADS N-12 OR EQUIVALENT, UNLESS OTHERWISE SPECIFIED.
4. ALL STORM SEWER PIPES SHOWN AS RCP ON THE PLANS SHALL BE REINFORCED CONCRETE PIPE CONFORMING TO ASTM C-76, UNLESS INDICATED OTHERWISE ON PLANS.

GROUND STABILIZATION		
SITE AREA DESCRIPTION	STABILIZATION TIME FRAME	STABILIZATION TIME FRAME EXCEPTIONS
PERIMETER DIKES, SWALES, DITCHES AND SLOPES	7 DAYS	NONE
HIGH QUALITY WATER (HQW) ZONES	7 DAYS	NONE
SLOPES STEEPER THAN 3:1	7 DAYS	IF SLOPES ARE 10' OR LESS IN LENGTH AND ARE NOT STEEPER THAN 2:1, 14 DAYS ARE ALLOWED.
SLOPES 3:1 OR FLATTER	14 DAYS	7-DAYS FOR SLOPES GREATER THAN 50 FEET IN LENGTH
ALL OTHER AREAS WITH SLOPES FLATTER THAN 4:1	14 DAYS	NONE (EXCEPT FOR PERIMETERS AND HQW ZONES)

EXISTING UTILITY NOTES

1. IT IS THE RESPONSIBILITY OF THE GENERAL CONTRACTOR TO VERIFY THE ACTUAL LOCATION AND AVAILABILITY OF ALL EXISTING AND PROPOSED UTILITIES IN THE FIELD PRIOR TO GROUND BREAKING.
2. EXISTING UTILITIES AND STRUCTURES SHOWN, BOTH UNDERGROUND AND ABOVE GROUND, ARE BASED ON A FIELD SURVEY AND THE BEST AVAILABLE RECORD DRAWINGS. THE CONTRACTOR SHALL FIELD VERIFY FIELD CONDITIONS PRIOR TO BEGINNING RELATED CONSTRUCTION. ANY DISCREPANCIES SHALL BE REPORTED TO THE OWNER'S REPRESENTATIVE IMMEDIATELY.

UTILITY CONTACTS:

1. CONTACT THE NORTH CAROLINA ONE CALL CENTER PRIOR TO DOING AND DIGGING. 1-800-632-4949

NOTICE REQUIRED

ALL EXISTING UNDERGROUND UTILITIES SHALL BE PHYSICALLY LOCATED BY CONTRACTOR PRIOR TO THE BEGINNING OF ANY CONSTRUCTION IN THE VICINITY OF SAID UTILITIES.

CONTRACTORS SHALL NOTIFY OPERATORS WHO MAINTAIN UNDERGROUND UTILITY LINES IN THE AREA OF PROPOSED EXCAVATION AT LEAST TWO WORKING DAYS, BUT NOT MORE THAN TEN WORKING DAYS PRIOR TO ANY EXCAVATION OR DEMOLITION.

CONTACT "CAROLINA ONE CALL" AT
1-800-632-4949

EMERGENCY DIAL 911 POLICE - FIRE - RESCUE

Approved Construction Plan
Name Date
Planning
Traffic
Fire

For each open utility cut of City streets, a $325 permit shall be required from the City prior to occupancy and/or project acceptance.

CITY OF WILMINGTON NORTH CAROLINA
Public Services • Engineering Division
APPROVED STORMWATER MANAGEMENT PLAN
Date: Permit #
Signed:

NORTH CAROLINA PROFESSIONAL SEAL 031315 ENGINEER CARRY S. PAPE
03/20/2015

No.	Revision	Date	By

Designer GSP	Scale
Drawn By GSP	Date March 2015
License # P-0718	Job No. 2014-0006

BELLE MEADE MIXED-USE
Wilmington New Hanover County North Carolina

GENERAL NOTES

PREPARED FOR:
BELLE MEADE DEVELOPMENT PARTNERS, LLC
6626-C GORDON ROAD
WILMINGTON, NC 28411
910-799-3006

GSP CONSULTING, PLLC
ENGINEERING
6626 Gordon Road Unit C Wilmington, North Carolina 28411 tel: 910-442-7870 fax: 910-799-6659

Sheet No.
C-1

NOW OR FORMERLY
DAVID EARL SIKES and wife, SAUNDRA H. SIKES
BOOK 1128 PAGE 1288
PARCEL ID No. R07000-004-003-000
ZONE R - 15

PART of TRACT 3
BIDDLE SUBDIVISION
~MARIE P. SIKES~
BOOK 0660 PAGE 0421
PARCEL ID No. R07100-003-004-000
ZONE R - 15

~MARIE P. SIKES~
BOOK 1462 PAGE 1687
PARCEL ID No. R07100-003-005-000
ZONE R - 15

TRACT "B"
6.48± ACRES
(FUTURE DEVELOPMENT)

EX. GRAVEL TO BE REMOVED (TYP)

EX. BUILDING TO BE REMOVED (TYP)

EX. BUILDINGS TO BE REMOVED (TYP)

EX. TREE TO BE REMOVED (TYP)

MATTEO DRIVE
1001.19' (TOTAL)
2.28± ACRES

975.52'
S50°23'58"W
1094.00'(TOTAL)

TRACT 7
BIDDLE SUBDIVISION
NOW OR FORMERLY
~LAWRENCE LAWSON~
BOOK 0337 PAGE 0209
PARCEL ID No. R07100-003-009-000
ZONE R - 15

SILVA TERRA DRIVE
S.R.1237 (60' R/W)

MYRTLE GROVE ROAD
(SOUTH BOUND TRAFFIC LANE)

MYRTLE GROVE ROAD
(NORTH BOUND TRAFFIC LANE)

CAROLINA BEACH ROAD U.S. HWY. No. 421

MYRTLE GROVE ROAD U.S. HWY. No. 421

SIKES CREEK FOREST
MARIE'S INN SUBDIVISION
MAP BOOK 5033 PAGE 1014

LOT 1 BELLE MEADE VILLAGE PHASE 2 MAP BOOK __ PAGE ___
LOT 2 BELLE MEADE VILLAGE PHASE 2 MAP BOOK __ PAGE ___
LOT 3 BELLE MEADE VILLAGE PHASE 2 MAP BOOK __ PAGE ___
LOT 40 BELLE MEADE VILLAGE PHASE 1 MAP BOOK __ PAGE ___

COMMON ELEMENTS OPEN SPACE

Approved Construction Plan

	Name	Date
Planning		
Traffic		
Fire		

CITY OF WILMINGTON NORTH CAROLINA
Public Services • Engineering Division
APPROVED STORMWATER MANAGEMENT PLAN
Date:_____ Permit #_____
Signed: _____

For each open utility cut of City streets, a $325 permit shall be required from the City prior to occupancy and/or project acceptance.

NORTH CAROLINA PROFESSIONAL SEAL 031315 ENGINEER CARRY S. PATE
03/20/2015

GRAPHIC SCALE
50 0 25 50 100
1 inch = 50 ft.

No.	Revision	Date	By

Designer: GSP	Scale: 1" = 50'
Drawn By: GSP	Date: March 2015
License #: P-0718	Job No.: 2014-0006

BELLE MEADE MIXED-USE

Wilmington New Hanover County North Carolina

EXISTING CONDITIONS

PREPARED FOR:
BELLE MEADE DEVELOPMENT PARTNERS, LLC
6626-C GORDON ROAD
WILMINGTON, NC 28411
910-799-3006

GSP CONSULTING, PLLC
ENGINEERING
6626 Gordon Road Unit C Wilmington, North Carolina 28411 tel: 910-442-7870 fax: 910-799-6659

Sheet No. C-2

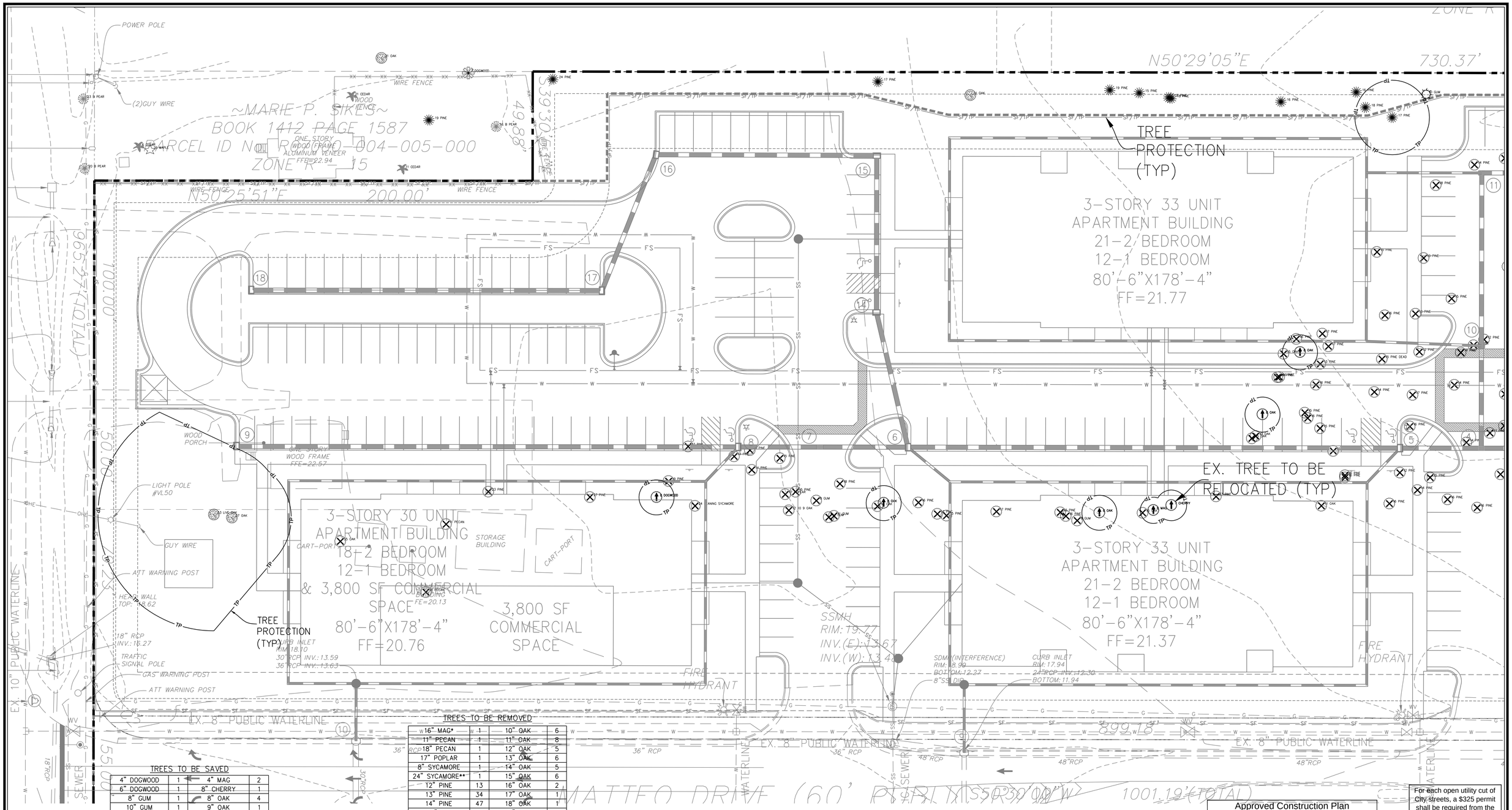

TREES TO BE SAVED

4" DOGWOOD	1	4" MAG	2
6" DOGWOOD	1	8" CHERRY	1
8" GUM	1	8" OAK	4
10" GUM	1	9" OAK	1
11"GUM	1	11" OAK	2
12" GUM	1	12" OAK	1
14" GUM	1	13" OAK	1
16" GUM	2	14" OAK	3
13" PINE	1	15" OAK	1
14" PINE	1	16" OAK	1
15" PINE	2	18" OAK	1
16" PINE	8	20" OAK	1
17" PINE	8	22" OAK	1
18" PINE	6	27" OAK	1
19" PINE	2	36" OAK	1
20" PINE	2	53" OAK	1
21" PINE	3	22" MAPLE	1
22" PINE	1	14" SYCAMORE	1
24" PINE	1	25" SYCAMORE	1

TREES TO BE RELOCATED

4" DOGWOOD	1
8" DOGWOOD	1
8" OAK	8
9" OAK	4
4" MAG	1
6" MAG	3
7" MAG	1
7" CHERRY	1
8" CHERRY	1

TREES TO BE REMOVED

16" MAG*	1	10" OAK	6
11" PECAN	1	11" OAK	8
18" PECAN	1	12" OAK	5
17" POPLAR	1	13" OAK	6
8" SYCAMORE	1	14" OAK	5
24" SYCAMORE**	1	15" OAK	6
12" PINE	13	16" OAK	2
13" PINE	34	17" OAK	1
14" PINE	47	18" OAK	1
15"PINE	40	19" OAK	1
16" PINE	58	31" OAK*	1
17" PINE	36	35" OAK*	1
18" PINE	17	7" GUM	1
19" PINE	14	8" GUM	2
20" PINE	13	9" GUM	4
21" PINE	13	10" GUM	1
22" PINE	4	11" GUM	2
23" PINE	5	14" GUM	2
27" PINE*	3	15" GUM	3
		16" GUM	1
		17" GUM	1
		23" GUM	2

*SIGNIFICANT TREE (SEE LANDSCAPE PLAN FOR MITIGATION)
**DAMAGED

Approved Construction Plan

Name Date

Planning_____

Traffic_____

Fire_____

CITY OF WILMINGTON NORTH CAROLINA

Public Services • Engineering Division

APPROVED STORMWATER MANAGEMENT PLAN

Date:_____ Permit #_____

Signed: _____

For each open utility cut of City streets, a $325 permit shall be required from the City prior to occupancy and/or project acceptance.

NORTH CAROLINA PROFESSIONAL SEAL 031315 ENGINEER CARRY S. PAPE 04/27/2015

GRAPHIC SCALE

20 0 10 20 40

1 inch = 20 ft.

No.	Revision	Date	By

Designer: GSP	Scale: 1" = 20'
Drawn By: GSP	Date: March 2015
License #: P-0718	Job No.: 2014-0006

BELLE MEADE MIXED-USE

Wilmington New Hanover County North Carolina

SITE INVENTORY PLAN

PREPARED FOR:
BELLE MEADE DEVELOPMENT PARTNERS, LLC
6626-C GORDON ROAD
WILMINGTON, NC 28411
910-799-3006

GSP CONSULTING, PLLC
ENGINEERING
6626 Gordon Road Unit C Wilmington, North Carolina 28411 tel: 910-442-7870 fax: 910-799-6659

Sheet No. **C-2.1**

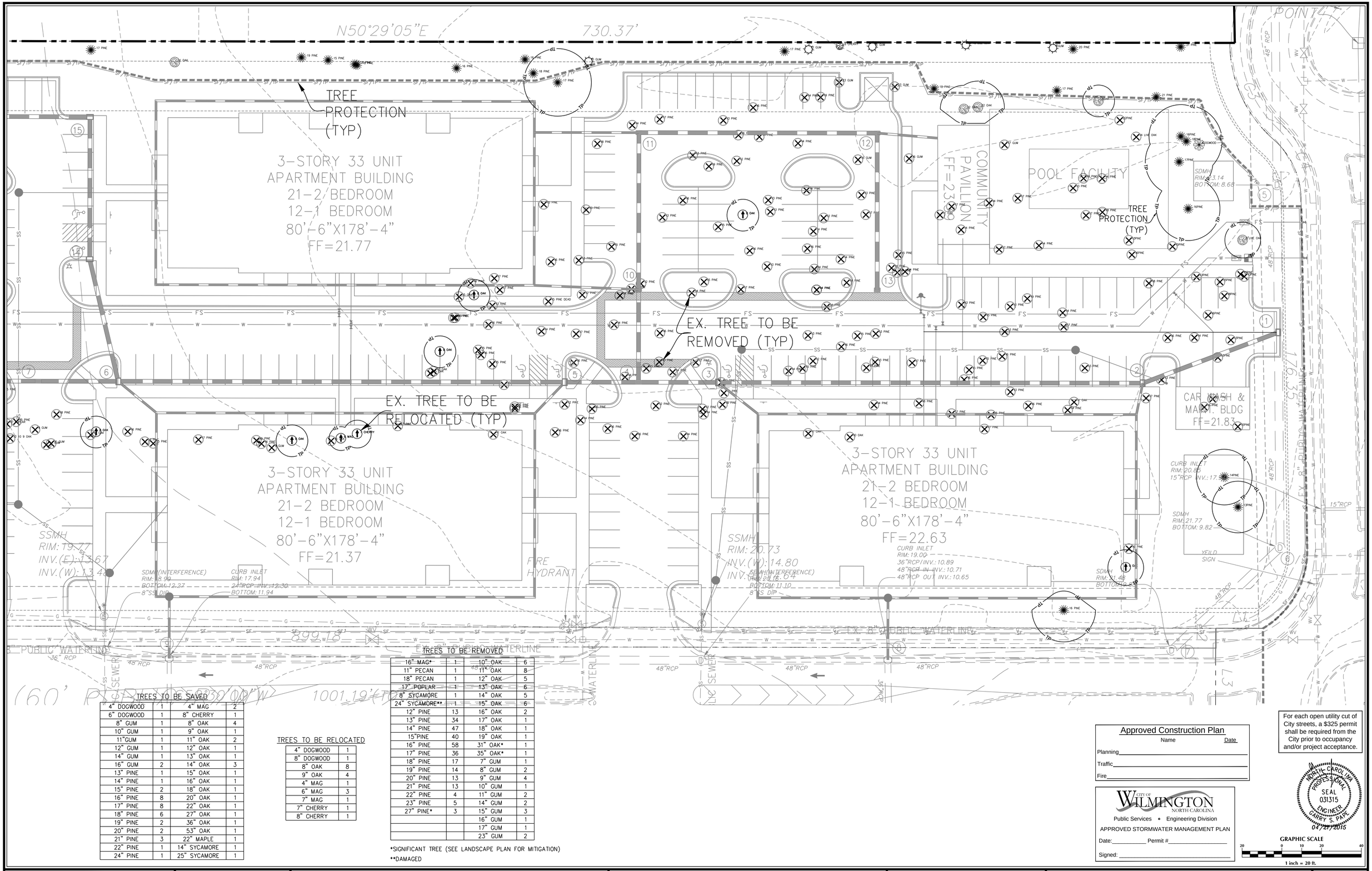

TREES TO BE SAVED

4" DOGWOOD	1	4" MAG	2
6" DOGWOOD	1	8" CHERRY	1
8" GUM	1	8" OAK	4
10" GUM	1	9" OAK	1
11"GUM	1	11" OAK	2
12" GUM	1	12" OAK	1
14" GUM	1	13" OAK	1
16" GUM	2	14" OAK	3
13" PINE	1	15" OAK	1
14" PINE	1	16" OAK	1
15" PINE	2	18" OAK	1
16" PINE	8	20" OAK	1
17" PINE	8	22" OAK	1
18" PINE	6	27" OAK	1
19" PINE	2	36" OAK	1
20" PINE	2	53" OAK	1
21" PINE	3	22" MAPLE	1
22" PINE	1	14" SYCAMORE	1
24" PINE	1	25" SYCAMORE	1

TREES TO BE RELOCATED

4" DOGWOOD	1
8" DOGWOOD	1
8" OAK	8
9" OAK	4
4" MAG	1
6" MAG	3
7" MAG	1
7" CHERRY	1
8" CHERRY	1

TREES TO BE REMOVED

16" MAG*	1	10" OAK	6
11" PECAN	1	11" OAK	8
18" PECAN	1	12" OAK	5
17" POPLAR	1	13" OAK	6
8" SYCAMORE	1	14" OAK	5
24" SYCAMORE**	1	15" OAK	6
12" PINE	13	16" OAK	2
13" PINE	34	17" OAK	1
14" PINE	47	18" OAK	1
15"PINE	40	19" OAK	1
16" PINE	58	31" OAK*	1
17" PINE	36	35" OAK*	1
18" PINE	17	7" GUM	1
19" PINE	14	8" GUM	2
20" PINE	13	9" GUM	4
21" PINE	13	10" GUM	1
22" PINE	4	11" GUM	2
23" PINE	5	14" GUM	2
27" PINE*	3	15" GUM	3
		16" GUM	1
		17" GUM	1
		23" GUM	2

*SIGNIFICANT TREE (SEE LANDSCAPE PLAN FOR MITIGATION)
**DAMAGED

Approved Construction Plan

Name Date

Planning _____

Traffic _____

Fire _____

CITY OF WILMINGTON NORTH CAROLINA

Public Services • Engineering Division

APPROVED STORMWATER MANAGEMENT PLAN

Date: _____ Permit # _____

Signed: _____

For each open utility cut of City streets, a $325 permit shall be required from the City prior to occupancy and/or project acceptance.

NORTH CAROLINA PROFESSIONAL SEAL 031315 ENGINEER CARRY S. PARK
07/27/2015

No.	Revision	Date	By

Designer GSP	Scale 1" = 20'
Drawn By GSP	Date March 2015
License # P-0718	Job No. 2014-0006

BELLE MEADE MIXED-USE

Wilmington New Hanover County North Carolina

SITE INVENTORY PLAN

PREPARED FOR:
BELLE MEADE DEVELOPMENT PARTNERS, LLC
6626-C GORDON ROAD
WILMINGTON, NC 28411
910-799-3006

GSP CONSULTING, PLLC
ENGINEERING
6626 Gordon Road Unit C Wilmington, North Carolina 28411 tel: 910-442-7870 fax: 910-799-6659

Sheet No. C-2.2

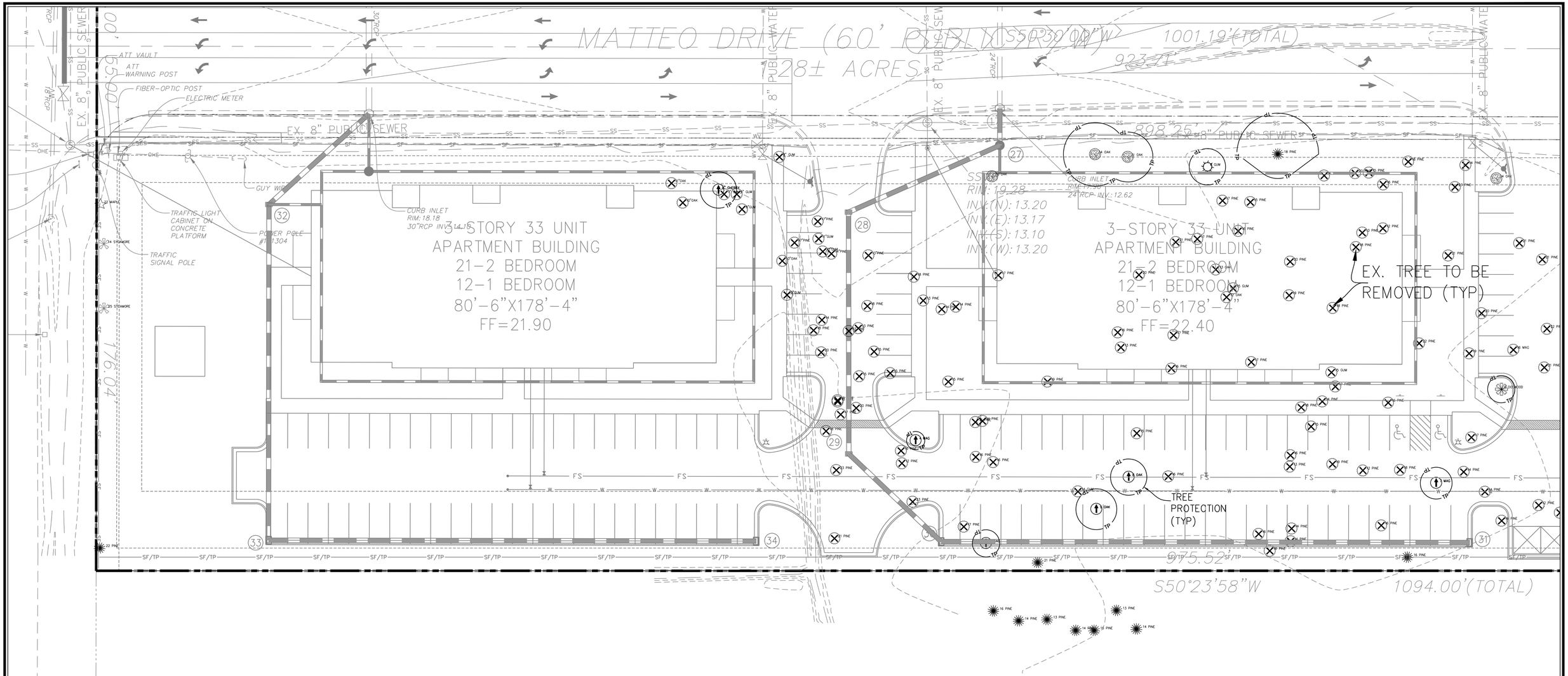

TRACT 7
BIDDLE SUBDIVISION
NOW OR FORMERLY
~LAWRENCE LAWSON~
BOOK 0337 PAGE 0209
PARCEL ID No. R07100-003-009-000

TREES TO BE SAVED

4" DOGWOOD	1	4" MAG	2
6" DOGWOOD	1	8" CHERRY	1
8" GUM	1	8" OAK	4
10" GUM	1	9" OAK	1
11"GUM	1	11" OAK	2
12" GUM	1	12" OAK	1
14" GUM	1	13" OAK	1
16" GUM	2	14" OAK	3
13" PINE	1	15" OAK	1
14" PINE	1	16" OAK	1
15" PINE	2	18" OAK	1
16" PINE	8	20" OAK	1
17" PINE	8	22" OAK	1
18" PINE	6	27" OAK	1
19" PINE	2	36" OAK	1
20" PINE	2	53" OAK	1
21" PINE	3	22" MAPLE	1
22" PINE	1	14" SYCAMORE	1
24" PINE	1	25" SYCAMORE	1

TREES TO BE RELOCATED

4" DOGWOOD	1
8" DOGWOOD	1
8" OAK	8
9" OAK	4
4" MAG	1
6" MAG	3
7" MAG	1
7" CHERRY	1
8" CHERRY	1

TREES TO BE REMOVED

16" MAG*	1	10" OAK	6
11" PECAN	1	11" OAK	8
18" PECAN	1	12" OAK	5
17" POPLAR	1	13" OAK	6
8" SYCAMORE	1	14" OAK	5
24" SYCAMORE**	1	15" OAK	6
12" PINE	13	16" OAK	2
13" PINE	34	17" OAK	1
14" PINE	47	18" OAK	1
15"PINE	40	19" OAK	1
16" PINE	58	31" OAK*	1
17" PINE	36	35" OAK*	1
18" PINE	17	7" GUM	1
19" PINE	14	8" GUM	2
20" PINE	13	9" GUM	4
21" PINE	13	10" GUM	1
22" PINE	4	11" GUM	2
23" PINE	5	14" GUM	2
27" PINE*	3	15" GUM	3
		16" GUM	1
		17" GUM	1
		23" GUM	2

*SIGNIFICANT TREE (SEE LANDSCAPE PLAN FOR MITIGATION)
**DAMAGED

Approved Construction Plan

Name Date

Planning

Traffic

Fire

CITY OF WILMINGTON NORTH CAROLINA
Public Services • Engineering Division
APPROVED STORMWATER MANAGEMENT PLAN
Date: Permit #
Signed:

For each open utility cut of City streets, a $325 permit shall be required from the City prior to occupancy and/or project acceptance.

NORTH CAROLINA PROFESSIONAL SEAL 031315 ENGINEER GARRY S. PAPE
04/27/2015

GRAPHIC SCALE
20 0 10 20 40
1 inch = 20 ft.

No.	Revision	Date	By

Designer GSP	Scale 1" = 20'
Drawn By GSP	Date March 2015
License # P-0718	Job No. 2014-0006

BELLE MEADE MIXED-USE

Wilmington New Hanover County North Carolina

SITE INVENTORY PLAN

PREPARED FOR:
BELLE MEADE DEVELOPMENT PARTNERS, LLC
6626-C GORDON ROAD
WILMINGTON, NC 28411
910-799-3006

GSP CONSULTING, PLLC
ENGINEERING
6626 Gordon Road Unit C Wilmington, North Carolina 28411 tel: 910-442-7870 fax: 910-799-6659

Sheet No. C-2.3

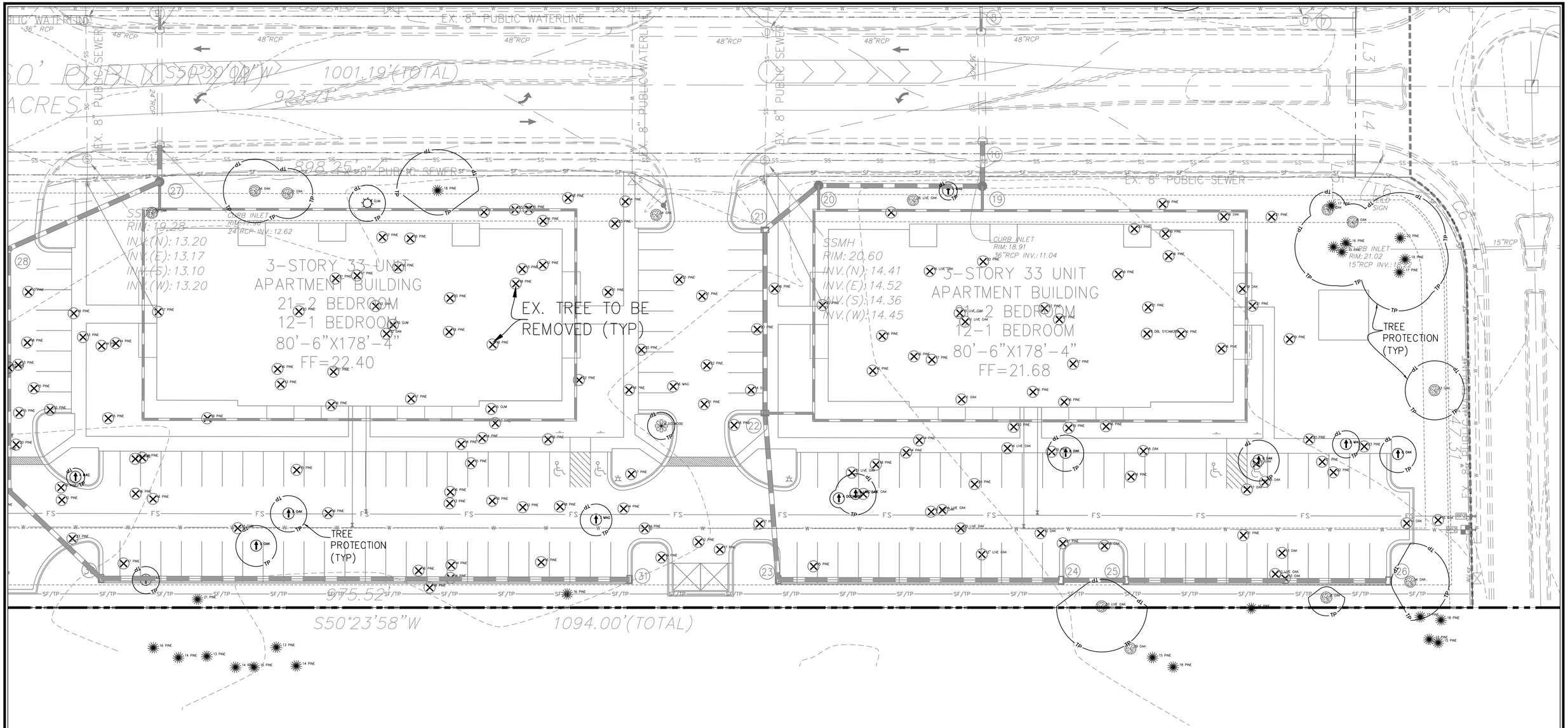

TREES TO BE SAVED

4" DOGWOOD	1	4" MAG	2
6" DOGWOOD	1	8" CHERRY	1
8" GUM	1	8" OAK	4
10" GUM	1	9" OAK	1
11"GUM	1	11" OAK	2
12" GUM	1	12" OAK	1
14" GUM	1	13" OAK	1
16" GUM	2	14" OAK	3
13" PINE	1	15" OAK	1
14" PINE	1	16" OAK	1
15" PINE	2	18" OAK	1
16" PINE	8	20" OAK	1
17" PINE	8	22" OAK	1
18" PINE	6	27" OAK	1
19" PINE	2	36" OAK	1
20" PINE	2	53" OAK	1
21" PINE	3	22" MAPLE	1
22" PINE	1	14" SYCAMORE	1
24" PINE	1	25" SYCAMORE	1

TREES TO BE RELOCATED

4" DOGWOOD	1
8" DOGWOOD	1
8" OAK	8
9" OAK	4
4" MAG	1
6" MAG	3
7" MAG	1
7" CHERRY	1
8" CHERRY	1

TREES TO BE REMOVED

16" MAG*	1	10" OAK	6
11" PECAN	1	11" OAK	8
18" PECAN	1	12" OAK	5
17" POPLAR	1	13" OAK	6
8" SYCAMORE	1	14" OAK	5
24" SYCAMORE**	1	15" OAK	6
12" PINE	13	16" OAK	2
13" PINE	34	17" OAK	1
14" PINE	47	18" OAK	1
15"PINE	40	19" OAK	1
16" PINE	58	31" OAK*	1
17" PINE	36	35" OAK*	1
18" PINE	17	7" GUM	1
19" PINE	14	8" GUM	2
20" PINE	13	9" GUM	4
21" PINE	13	10" GUM	1
22" PINE	4	11" GUM	2
23" PINE	5	14" GUM	2
27" PINE*	3	15" GUM	3
		16" GUM	1
		17" GUM	1
		23" GUM	2

*SIGNIFICANT TREE (SEE LANDSCAPE PLAN FOR MITIGATION)
**DAMAGED

Approved Construction Plan

Name Date

Planning _____

Traffic _____

Fire _____

CITY OF WILMINGTON NORTH CAROLINA
Public Services • Engineering Division
APPROVED STORMWATER MANAGEMENT PLAN
Date:_____ Permit #_____
Signed: _____

For each open utility cut of City streets, a $325 permit shall be required from the City prior to occupancy and/or project acceptance.

NORTH CAROLINA PROFESSIONAL SEAL 031315 ENGINEER CARRY S. PAPE
04/27/2015

GRAPHIC SCALE
20 0 10 20 40
1 inch = 20 ft.

No.	Revision	Date	By

Designer GSP	Scale 1" = 20'
Drawn By GSP	Date March 2015
License # P-0718	Job No. 2014-0006

BELLE MEADE MIXED-USE

Wilmington New Hanover County North Carolina

SITE INVENTORY PLAN

PREPARED FOR:
BELLE MEADE DEVELOPMENT PARTNERS, LLC
6626-C GORDON ROAD
WILMINGTON, NC 28411
910-799-3006

GSP CONSULTING, PLLC
ENGINEERING
6626 Gordon Road Unit C Wilmington, North Carolina 28411 tel: 910-442-7870 fax: 910-799-6659

Sheet No. C-2.4

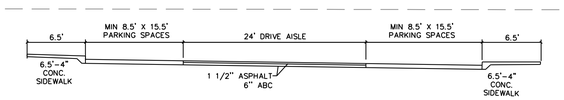

Typical X-Section at Parking Area

NTS

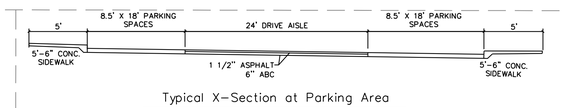

Typical X-Section at Parking Area

NTS

NOW OR FORMERLY
DAVID EARL SIKES and wife, SAUNDRA H. SIKES
BOOK 1128 PAGE 1288
PARCEL ID No. R07000-004-003-000
ZONE R - 15

PART of TRACT 3
BIDDLE SUBDIVISION
~MARIE P. SIKES~
BOOK 0660 PAGE 0421
PARCEL ID No. R07100-003-004-000
ZONE R - 15

~MARIE P. SIKES~
BOOK 1412 PAGE 1587
PARCEL ID No. R07000-004-005-000
ZONE R - 15

N50°29'05"E 730.37'

S39°30'55"E 49.88'

N39°30'55"W 965.27'(TOTAL)

200.00'

3-STORY 33 UNIT APARTMENT BUILDING
21-2 BEDROOM
12-1 BEDROOM
80'-6"X178'-4"
FF=22.42

COMMUNITY PAVILION FF=23.39

POOL FACILITY

3-STORY 30 UNIT APARTMENT BUILDING
18-2 BEDROOM
12-1 BEDROOM
& 3,800 SF COMMERCIAL SPACE
80'-6"X178'-4"
FF=20.76

3,800 SF COMMERCIAL SPACE

3-STORY 33 UNIT APARTMENT BUILDING
21-2 BEDROOM
12-1 BEDROOM
80'-6"X178'-4"
FF=21.37

3-STORY 33 UNIT APARTMENT BUILDING
21-2 BEDROOM
12-1 BEDROOM
80'-6"X178'-4"
FF=22.63

CAR WASH & MAINT. BLDG FF=21.83

899.18'

MATTEO DRIVE
(80' PUBLIC R/W)

S50°30'02"W 923.71'

1001.19'(TOTAL)

894.75'

3-STORY 33 UNIT APARTMENT BUILDING
21-2 BEDROOM
12-1 BEDROOM
80'-6"X178'-4"
FF=21.90

3-STORY 33 UNIT APARTMENT BUILDING
21-2 BEDROOM
12-1 BEDROOM
80'-6"X178'-4"
FF=22.40

3-STORY 33 UNIT APARTMENT BUILDING
21-2 BEDROOM
12-1 BEDROOM
80'-6"X178'-4"
FF=21.68

975.52'

S50°23'58"W 1094.00'(TOTAL)

SILVA TERRA DRIVE
S.R.1237 (60' R/W)

SILVA TERRA SECTION 1
MAP BOOK 10 PAGE 34

10' DRAINAGE R/W

CAROLINA BEACH ROAD U.S. HWY. No. 421
(SOUTH BOUND TRAFFIC LANE)

ROAD U.S. HWY. No. 421
BOUND TRAFFIC LANE)

NOW OR FORMERLY
~CAROL A. SWENSON~
BOOK 1224 PAGE 0913

NOW OR FORMERLY
~WILBUR L. RUSS, ETUX~
BOOK 0752 PAGE 0011

PORTION OF LOT 4
GEORGE L. BIDDLE
PROPERTY
THIS AREA T
CAROLINA BEACH
ROAD WILL BE
REZONED TO O + I

S HOLDINGS, LLC BOOK 4765 PAGE 0803

H UTILITY EASEMENT
5033 PAGE 1014)

5' DRIVE (PUBLIC ARE'S IN THIS AREA)

PAL UTILITY EASEMENT

C UTILITY EASEMENT

MAP BOOK __ PAGE ___

LOT 2
BELLE MEADE VILLAGE PHASE 2
MAP BOOK __ PAGE ___

LOT 1
BELLE MEADE VILLAGE PHASE 2
MAP BOOK __ PAGE ___

CONTROL POINT

PINE HOLLOW DRIVE
(60' PUBLIC R/W)

YIELD SIGN

COMMON ELEMENTS STORM WATER MANAGEMENT SYSTEM PRIVATE DRAINAGE EASEMENT

10' NON-MUNICIPAL UTILITY EASEMENT

20' PRIVATE STORM DRAINAGE EASEMENT

20' PUBLIC DRAINAGE EASEMENT

25' PUBLIC UTILITY EASEMENT

SIKES DRIVE (PUBLIC R/W VARIES)

CONTROL POINT

MATTEO COURT
(40' PUBLIC R/W)

10' NON-MUNICIPAL UTILITY EASEMENT

ONE WAY SIGN POST

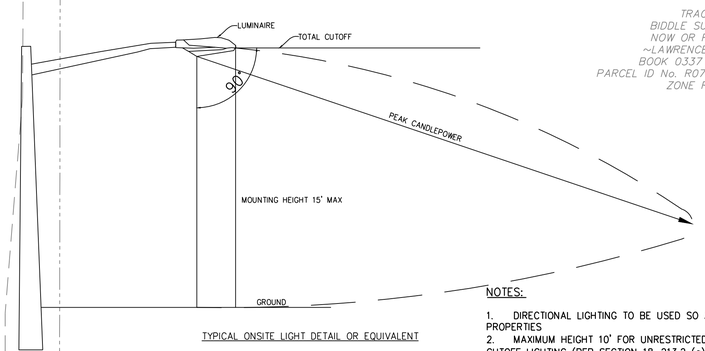

TYPICAL ONSITE LIGHT DETAIL OR EQUIVALENT

TRACT 7
BIDDLE SUBDIVISION
NOW OR FORMERLY
~LAWRENCE LAWSON~
BOOK 0337 PAGE 0209
PARCEL ID No. R07100-003-009-000
ZONE R - 15

NOTES:

1. DIRECTIONAL LIGHTING TO BE USED SO AS NOT TO AFFECT ADJACENT PROPERTIES.
2. MAXIMUM HEIGHT 10' FOR UNRESTRICTED LIGHTING AND 15' FOR 90° CUTOFF LIGHTING (PER SECTION 18-213.2 (a) (8) OF CITY OF WILMINGTON LAND DEVELOPMENT CODE.

TRANSPORTATION NOTES:

1. ALL PAVEMENT MARKINGS IN PUBLIC RIGHTS-OF-WAY & FOR DRIVEWAY ARE TO BE THERMOPLASTIC & MEET CITY AND/OR NCDOT STANDARDS.
2. TRAFFIC CONTROL DEVICES (INCLUDING SIGNS AND PAVEMENT MARKINGS) IN AREAS OPEN TO PUBLIC TRAFFIC ARE TO MEET MUTCD (MANUAL ON UNIFORM TRAFFIC CONTROL DEVICES) STANDARDS.
3. CONTACT TRAFFIC ENGINEERING, AT 341-7888 TO ENSURE THAT ALL TRAFFIC SIGNAL FACILITIES AND EQUIPMENT ARE SHOWN ON THE PLAN. ADD A NOTE TO CALL TRAFFIC ENGINEERING FORTY-EIGHT (48) HOURS PRIOR TO ANY EXCAVATION IN THE R/W.
4. ANY BROKEN OR MISSING SIDEWALK PANELS, DRIVEWAY PANELS AND CURBING WILL BE REPLACED.
5. CONTACT TRAFFIC ENGINEERING AT 341-7888 TO DISCUSS SITE LIGHTING DETAILS.
6. TACTILE WARNING MATS TO BE INSTALLED AT ALL WHEELCHAIR RAMPS.
7. ALL TRAFFIC CONTROL SIGNS AND MARKINGS OFF THE RIGHT-OF-WAY ARE TO BE MAINTAINED BY THE PROPERTY OWNER IN ACCORDANCE WITH MUTCD STANDARDS.
8. ALL PARKING STALL MARKINGS AND LANE ARROWS WITHIN THE PARKING AREAS SHALL BE WHITE.
9. A UTILITY CUT PERMIT IS REQUIRED FOR EACH OPEN CUT OF A CITY STREET. CALL 341-5888 FOR MORE DETAILS. IN CERTAIN CASES AN ENTIRE RESURFACING OF THE AREA BEING OPEN CUT MAY BE REQUIRED.
10. INSTALL REFLECTORS PER CITY AND NCDOT STANDARDS. TRAFFIC ENGINEERING MUST APPROVE OF PAVEMENT MARKING LAYOUT PRIOR TO ACTUAL STRIPING.
11. A LANDSCAPING PLAN INDICATING THE LOCATION OF REQUIRED STREET TREES SHALL BE SUBMITTED TO THE CITY OF WILMINGTON TRAFFIC ENGINEERING DIVISION AND PARKS AND RECREATION DEPARTMENT FOR REVIEW AND APPROVAL PRIOR TO THE RECORDING OF THE FINAL PLAT.
12. CONTACT TRAFFIC ENGINEERING AT 341-7888 FORTY-EIGHT HOURS PRIOR TO ANY EXCAVATION IN THE RIGHT OF WAY.

Approved Construction Plan

Name Date

Planning_____

Traffic_____

Fire_____

CITY OF WILMINGTON NORTH CAROLINA

Public Services • Engineering Division

APPROVED STORMWATER MANAGEMENT PLAN

Date:_____ Permit #_____

Signed: _____

For each open utility cut of City streets, a $325 permit shall be required from the City prior to occupancy and/or project acceptance.

NORTH CAROLINA PROFESSIONAL SEAL 031315 ENGINEER CARRY S. PAPE

05/15/2015

GRAPHIC SCALE

50 0 25 50 100

1 inch = 50 ft.

No.	Revision	Date	By

Designer GSP	Scale 1" = 50'
Drawn By GSP	Date March 2015
License # P-0718	Job No. 2014-0006

BELLE MEADE MIXED-USE

Wilmington New Hanover County North Carolina

OVERALL SITE PLAN

PREPARED FOR:
BELLE MEADE DEVELOPMENT PARTNERS, LLC
6626-C GORDON ROAD
WILMINGTON, NC 28411
910-799-3006

GSP CONSULTING, PLLC
ENGINEERING
6626 Gordon Road Unit C Wilmington, North Carolina 28411 tel: 910-442-7870 fax: 910-799-6659

Sheet No. C-3.1

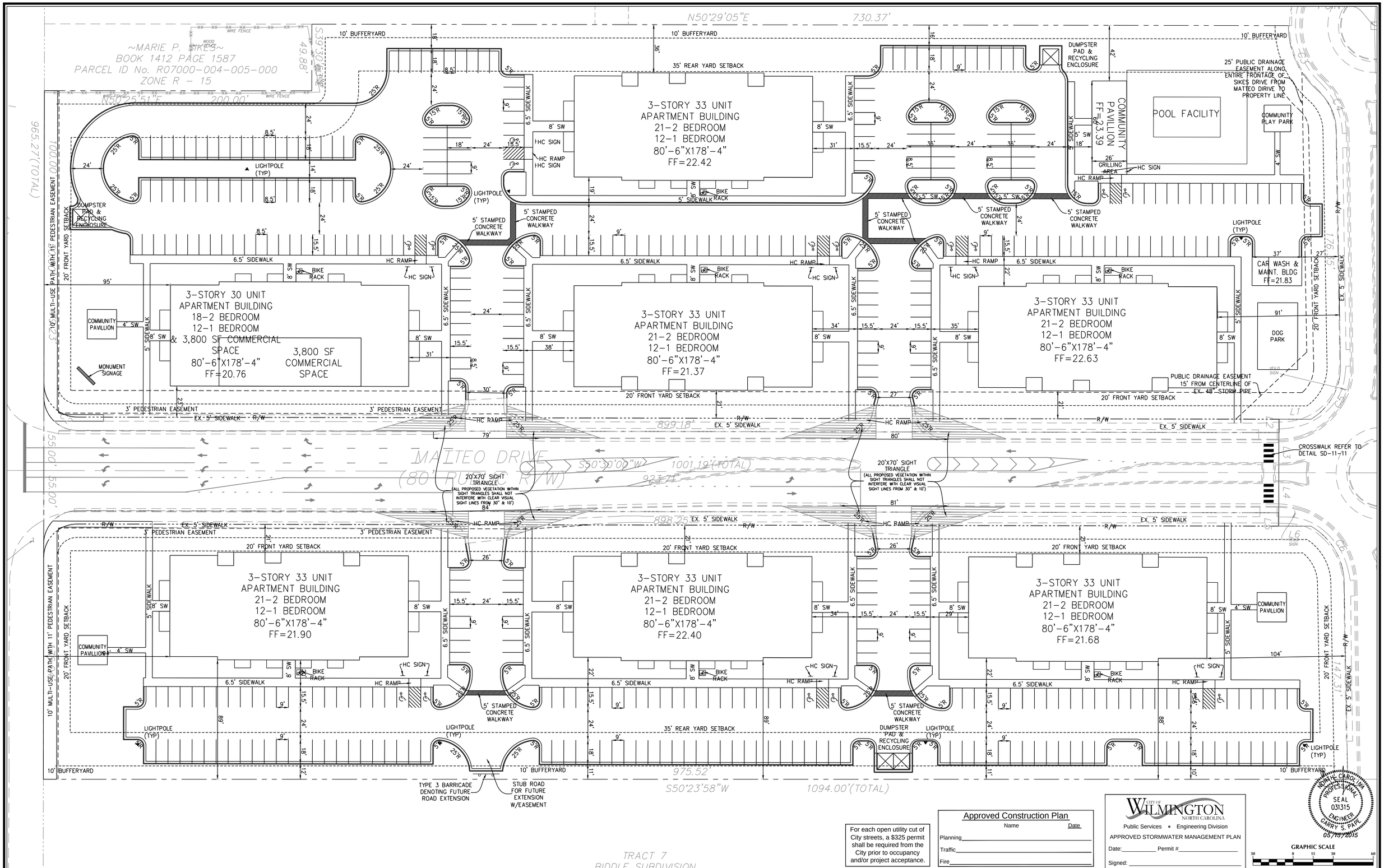

For each open utility cut of City streets, a $325 permit shall be required from the City prior to occupancy and/or project acceptance.

Approved Construction Plan

	Name	Date
Planning		
Traffic		
Fire		

CITY OF WILMINGTON NORTH CAROLINA
Public Services • Engineering Division
APPROVED STORMWATER MANAGEMENT PLAN
Date:_____ Permit #_____
Signed: _____

NORTH CAROLINA PROFESSIONAL SEAL 031315 ENGINEER GARRY S. PAPE 05/15/2015

GRAPHIC SCALE
30 0 15 30 60
1 inch = 30 ft.

No.	Revision	Date	By

Designer GSP	Scale 1" = 30'
Drawn By GSP	Date March 2015
License # P-0718	Job No. 2014-0006

BELLE MEADE MIXED-USE

Wilmington New Hanover County North Carolina

DETAILED SITE PLAN

PREPARED FOR:
BELLE MEADE DEVELOPMENT PARTNERS, LLC
6626-C GORDON ROAD
WILMINGTON, NC 28411
910-799-3006

GSP CONSULTING, PLLC
ENGINEERING
6626 Gordon Road Unit C Wilmington, North Carolina 28411 tel: 910-442-7870 fax: 910-799-6659

Sheet No.
C-3.2

GENERAL UTILITY NOTES:

1. PROJECT SHALL COMPLY WITH CAPE FEAR PUBLIC UTILITY AUTHORITY (CFPUA) CROSS CONNECTION REQUIREMENTS. WATER METER(S) CANNOT BE SET AND ACTIVATED ON NEW MAINS UNTIL ALL REQUIREMENTS ARE MET AND NCDENR HAS ISSUED THEIR "FINAL APPROVAL". CALL 332-6558 FOR INFORMATION.
2. IF THE CONTRACTOR DESIRES CFPUA WATER FOR CONSTRUCTION HE SHALL APPLY IN ADVANCE FOR THIS SERVICE AND MUST PROVIDE A REDUCED PRESSURE ZONE (RPZ) BACKFLOW PREVENTION DEVICE ON THE DEVELOPER'S SIDE OF THE WATER METER BOX.
3. TO USE CFPUA WATER FOR IRRIGATION IT MUST BE METERED SEPARATELY.
4. WHEN PVC WATER MAINS AND/OR POLYETHYLENE SERVICES ARE PROPOSED, THE PIPES ARE TO BE MARKED WITH NO. 10 INSULATED COPPER WIRE INSTALLED THE ENTIRE LENGTH AND STRAPPED TO THE PIPES WITH DUCT TAPE. THE INSULATED WIRE IS TO BE STRIPPED TO BARE WIRE AND SECURED TO ALL VALVES AND FITTINGS. THIS WIRE IS TO BE ACCESSIBLE AT ALL VALVES, FIRE HYDRANTS, AND WATER METER BOXES TO AID IN FUTURE LOCATIONS OF FACILITIES.
5. TREES ARE NOT TO BE PLANTED OVER WATER MAINS OR WITHIN UTILITY EASEMENTS.
6. STATE WATER AND SEWER PERMITS SHALL BE OBTAINED PRIOR TO RELEASE OF THE PROJECT FOR CONSTRUCTION.
7. ALL WATERMAINS WITHIN PUBLIC RIGHT OF WAY TO BE PUBLIC AND ALL WATERMAINS LOCATED ON PRIVATE PROPERTY TO BE PRIVATE.
8. POOL IS NOT TO DISCHARGE INTO THE CFPUA SEWER SYSTEM. CFPUA WILL CONSIDER THIS DISCHARGE ONLY IF FLOW IS DENIED INTO THE STORM DRAIN SYSTEM.
9. GATE VALVES TO BE LOCATED AT EACH DOMESTIC SERVICE LINE INTO BUILDINGS
10. ALL WATERLINES TO HAVE MINIMUM 10' SEPARATION FROM ALL SEWER LINES, MANHOLES AND CLEANOUTS & TO HAVE 3' OF COVER AND 18" CLEARANCE WHERE WATER CROSSES OTHER UTILITY LINES
11. ANY SANITARY SEWER SYSTEM OR ANY PORTION THEREOF, INCLUDING THE PUMP CHAMBER AND SERVICE CONNECTION PIPE TO THE COLLECTION MAIN, SHALL BE LOCATED AT LEAST A MINIMUM OF 10-FEET FROM ANY WATER LINE. SEWER LINES MAY CROSS A WATER LINE IF 18-INCH CLEAR SEPARATION DISTANCE IS MAINTAINED, WITH THE SEWER LINE CROSSING UNDER THE WATER LINE. WHEN CONDITIONS PREVENT AN 18-INCH CLEAR SEPARATION FROM BEING MAINTAINED OR WHENEVER IT IS NECESSARY FOR THE WATER LINE TO CROSS UNDER THE SEWER, THE SEWER LINE SHALL BE CONSTRUCTED OF DUCTILE IRON PIPE OR ITS EQUIVALENT AND THE WATER LINE SHALL BE CONSTRUCTED OF FERROUS MATERIALS EQUIVALENT TO WATER MAIN STANDARDS WITH FOR A DISTANCE OF AT LEAST TEN FEET ON EACH SIDE OF THE POINT OF CROSSING, WITH FULL SECTIONS OF PIPE CENTERED AT THE POINT OF CROSSING.

NOTES:
1. ALL SEWER SERVICES FROM BUILDINGS TO BE 6" PVC @ 1.0% MIN.
2. WATER METERS TO BE LOCATED 18" INSIDE ROW. IF METERS CANNOT BE WITHIN ROW THEN ADDITIONAL EASEMENT WILL BE REQUIRED AS PER CFPUA.

NOW OR FORMERLY
~CAROL A. SWENSON~
BOOK 1224 PAGE 0913

NOW OR FORMERLY
~WILBUR L. RUSS, ETUX~
BOOK 0752 PAGE 0011

PORTION OF LOT 4
GEORGE L. BIDDLE PROPERTY
THIS AREA T CAROLINA BEACH ROAD WILL BE REZONED TO O & I

TRACT 7
BIDDLE SUBDIVISION
NOW OR FORMERLY
~LAWRENCE LAWSON~
BOOK 0337 PAGE 0209
PARCEL ID No. R07100-003-009-000
ZONE R – 15

FIRE DEPARTMENT NOTES:
1. HYDRANT MUST BE WITHIN 150' OF THE FDC.
2. THE FDC MUST BE WITHIN 40' OF FIRE APPARATUS PLACEMENT.
3. LANDSCAPING OR PARKING CANNOT BLOCK OR IMPEDE THE FDC OR FIRE HYDRANTS. A 3-FOOT CLEAR SPACE SHALL BE MAINTAINED AROUND THE CIRCUMFERENCE OF THE HYDRANT AND FDC.
4. HYDRANTS MUST BE LOCATED WITHIN 8' OF THE CURB.
5. NEW HYDRANTS MUST BE AVAILABLE FOR USE PRIOR TO CONSTRUCTION OF THE BUILDING(S).
6. CONTRACTOR SHALL MAINTAIN AN ALL WEATHER ACCESS FOR EMERGENCY VEHICLES AT ALL TIMES DURING CONSTRUCTION.
7. UNDERGROUND FIRE LINE AND PRIVATE WATER MAINS MUST BE PERMITTED AND INSPECTED BY THE WILMINGTON FIRE DEPARTMENT FROM THE PRIVATE RIGHT-OF-WAY TO THE BUILDING. CONTACT THE WILMINGTON FIRE DEPARTMENT DIVISION OF FIRE AND LIFE SAFETY AT 910-343-0696 FOR ADDITIONAL INFORMATION.

CFPUA STANDARD SEWER NOTES
1. SEWER GUARDS REQUIRED AT ALL MANHOLES. STAINLESS STEEL SEWER GUARDS REQUIRED AT MANHOLES LOCATED IN TRAFFIC AREAS.
2. SERVICES SHALL BE PERPENDICULAR TO MAIN AND TERMINATE AT R/W LINE. SERVICES IN CUL-DE-SACS ARE REQUIRED TO BE PERPENDICULAR, OR MUST ORIGINATE IN MANHOLE AND TERMINATE AT RIGHT-OF-WAY LINE.
3. ALL SERVICES TYING INTO DUCTILE IRON MAINS SHALL BE CONSTRUCTED OF CLASS 50, DIP, WITH PROTECTO 401 CERAMIC EPOXY LINING.
4. 10' UTILITIES EASEMENT PROVIDED ALONG THE FRONTAGE OF ALL LOTS AND AS SHOWN.
5. NO FLEXIBLE COUPLINGS SHALL BE USED.
6. ALL CLEANOUTS TO BE LOCATED IN THE CENTER OF THE LOT.

UTILITY DATA:

PUBLIC
6" WATER = 76 LF
4" WATER = 43 LF
2 – 3" WATER METERS
2 – FIRE HYDRANTS

PRIVATE
8" SEWER = 544 LF
6" WATER = 1,778 LF
4" WATER = 2,141 LF
3" WATER = 341 LF
2" WATER = 100 LF
2 – FIRE HYDRANTS
7 – FDC

For each open utility cut of City streets, a $325 permit shall be required from the City prior to occupancy and/or project acceptance.

Approved Construction Plan

	Name	Date
Planning		
Traffic		
Fire		

CITY OF WILMINGTON NORTH CAROLINA
Public Services • Engineering Division
APPROVED STORMWATER MANAGEMENT PLAN
Date:__________ Permit #__________________
Signed: ______________________________

NORTH CAROLINA PROFESSIONAL SEAL 031315 ENGINEER GARRY S. PAPE 05/22/2015

GRAPHIC SCALE
50 0 25 50 100
1 inch = 50 ft.

No.	Revision	Date	By

Designer	GSP	Scale	1" = 50'
Drawn By	GSP	Date	March 2015
License #	P-0718	Job No.	2014-0006

BELLE MEADE MIXED-USE
Wilmington New Hanover County North Carolina

UTILITY PLAN

PREPARED FOR:
BELLE MEADE DEVELOPMENT PARTNERS, LLC
6626-C GORDON ROAD
WILMINGTON, NC 28411
910-799-3006

GSP CONSULTING, PLLC
ENGINEERING
6626 Gordon Road Unit C Wilmington, North Carolina 28411 tel: 910-442-7870 fax: 910-799-6659

Sheet No.
C-4

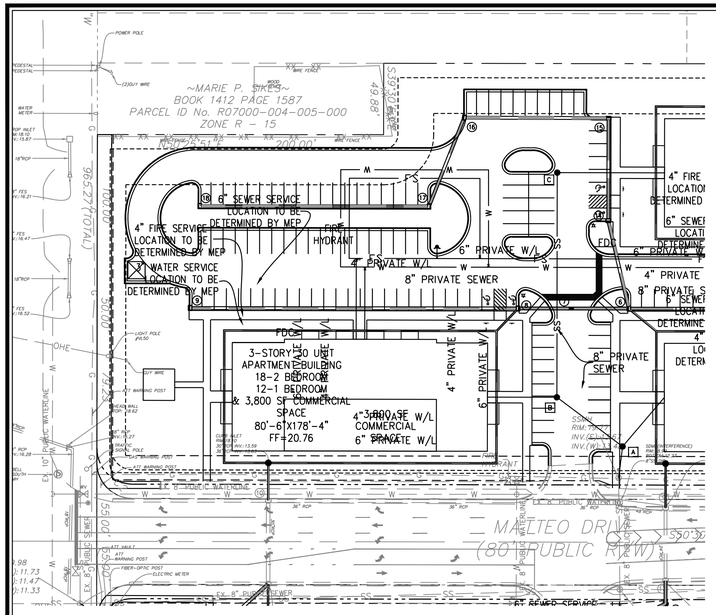

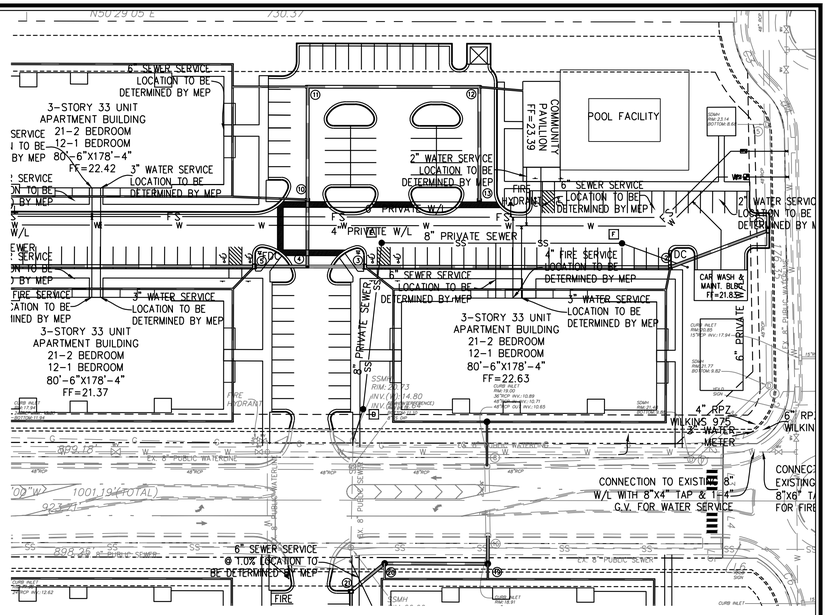

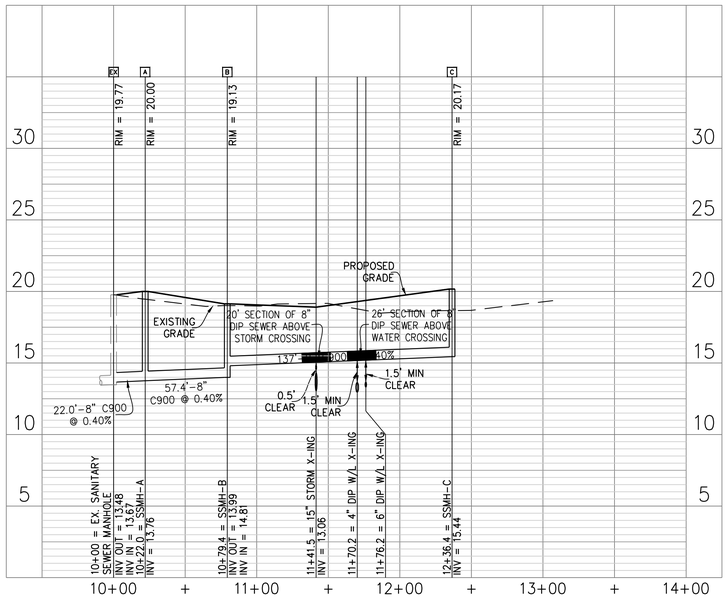

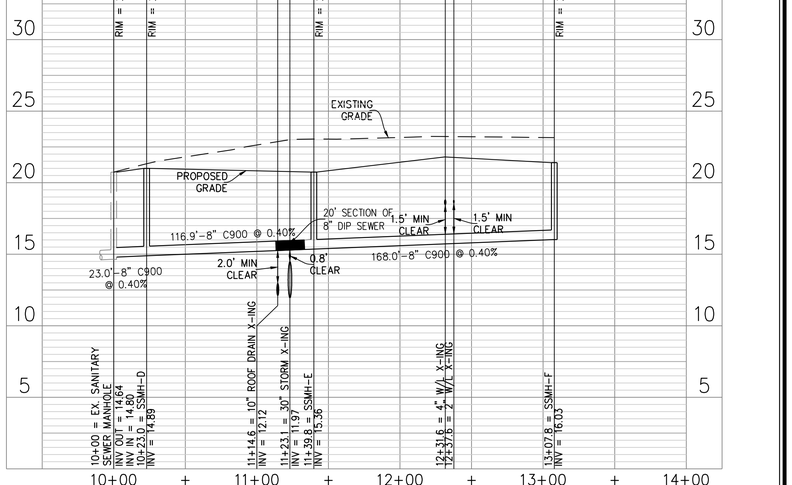

GENERAL UTILITY NOTES:

1. PROJECT SHALL COMPLY WITH CAPE FEAR PUBLIC UTILITY AUTHORITY (CFPUA) CROSS CONNECTION REQUIREMENTS. WATER METER(S) CANNOT BE SET AND ACTIVATED ON NEW MAINS UNTIL ALL REQUIREMENTS ARE MET AND NCDENR HAS ISSUED THEIR "FINAL APPROVAL". CALL 332-6558 FOR INFORMATION.
2. IF THE CONTRACTOR DESIRES CFPUA WATER FOR CONSTRUCTION HE SHALL APPLY IN ADVANCE FOR THIS SERVICE AND MUST PROVIDE A REDUCED PRESSURE ZONE (RPZ) BACKFLOW PREVENTION DEVICE ON THE DEVELOPER'S SIDE OF THE WATER METER BOX.
3. TO USE CFPUA WATER FOR IRRIGATION IT MUST BE METERED SEPARATELY.
4. WHEN PVC WATER MAINS AND/OR POLYETHYLENE SERVICES ARE PROPOSED, THE PIPES ARE TO BE MARKED WITH NO. 10 INSULATED COPPER WIRE INSTALLED THE ENTIRE LENGTH AND STRAPPED TO THE PIPES WITH DUCT TAPE. THE INSULATED WIRE IS TO BE STRIPPED TO BARE WIRE AND SECURED TO ALL VALVES AND FITTINGS. THIS WIRE IS TO BE ACCESSIBLE AT ALL VALVES, FIRE HYDRANTS, AND WATER METER BOXES TO AID IN FUTURE LOCATIONS OF FACILITIES.
5. TREES ARE NOT TO BE PLANTED OVER WATER MAINS OR WITHIN UTILITY EASEMENTS.
6. STATE WATER AND SEWER PERMITS SHALL BE OBTAINED PRIOR TO RELEASE OF THE PROJECT FOR CONSTRUCTION.
7. ALL WATERMAINS WITHIN PUBLIC RIGHT OF WAY TO BE PUBLIC AND ALL WATERMAINS LOCATED ON PRIVATE PROPERTY TO BE PRIVATE.
8. POOL IS NOT TO DISCHARGE INTO THE CFPUA SEWER SYSTEM. CFPUA WILL CONSIDER THIS DISCHARGE ONLY IF FLOW IS DENIED INTO THE STORM DRAIN SYSTEM.
9. GATE VALVES TO BE LOCATED AT EACH DOMESTIC SERVICE LINE INTO BUILDINGS
10. ALL WATERLINES TO HAVE MINIMUM 10' SEPARATION FROM ALL SEWER LINES, MANHOLES AND CLEANOUTS & TO HAVE 3' OF COVER AND 18" CLEARANCE WHERE WATER CROSSES OTHER UTILITY LINES
11. ANY SANITARY SEWER SYSTEM OR ANY PORTION THEREOF, INCLUDING THE PUMP CHAMBER AND SERVICE CONNECTION PIPE TO THE COLLECTION MAIN, SHALL BE LOCATED AT LEAST A MINIMUM OF 10-FEET FROM ANY WATER LINE. SEWER LINES MAY CROSS A WATER LINE IF 18-INCH CLEAR SEPARATION DISTANCE IS MAINTAINED, WITH THE SEWER LINE CROSSING UNDER THE WATER LINE. WHEN CONDITIONS PREVENT AN 18-INCH CLEAR SEPARATION FROM BEING MAINTAINED OR WHENEVER IT IS NECESSARY FOR THE WATER LINE TO CROSS UNDER THE SEWER, THE SEWER LINE SHALL BE CONSTRUCTED OF DUCTILE IRON PIPE OR ITS EQUIVALENT AND THE WATER LINE SHALL BE CONSTRUCTED OF FERROUS MATERIALS EQUIVALENT TO WATER MAIN STANDARDS WITH FOR A DISTANCE OF AT LEAST TEN FEET ON EACH SIDE OF THE POINT OF CROSSING, WITH FULL SECTIONS OF PIPE CENTERED AT THE POINT OF CROSSING.

FIRE DEPARTMENT NOTES:

1. HYDRANT MUST BE WITHIN 150' OF THE FDC.
2. THE FDC MUST BE WITHIN 40' OF FIRE APPARATUS PLACEMENT.
3. LANDSCAPING OR PARKING CANNOT BLOCK OR IMPEDE THE FDC OR FIRE HYDRANTS. A 3-FOOT CLEAR SPACE SHALL BE MAINTAINED AROUND THE CIRCUMFERENCE OF THE HYDRANT AND FDC.
4. HYDRANTS MUST BE LOCATED WITHIN 8' OF THE CURB.
5. NEW HYDRANTS MUST BE AVAILABLE FOR USE PRIOR TO CONSTRUCTION OF THE BUILDING(S).
6. CONTRACTOR SHALL MAINTAIN AN ALL WEATHER ACCESS FOR EMERGENCY VEHICLES AT ALL TIMES DURING CONSTRUCTION.
7. UNDERGROUND FIRE LINE AND PRIVATE WATER MAINS MUST BE PERMITTED AND INSPECTED BY THE WILMINGTON FIRE DEPARTMENT FROM THE PRIVATE RIGHT-OF-WAY TO THE BUILDING. CONTACT THE WILMINGTON FIRE DEPARTMENT DIVISION OF FIRE AND LIFE SAFETY AT 910-343-0696 FOR ADDITIONAL INFORMATION.

CFPUA STANDARD SEWER NOTES

1. SEWER GUARDS REQUIRED AT ALL MANHOLES. STAINLESS STEEL SEWER GUARDS REQUIRED AT MANHOLES LOCATED IN TRAFFIC AREAS.
2. SERVICES SHALL BE PERPENDICULAR TO MAIN AND TERMINATE AT R/W LINE. SERVICES IN CUL-DE-SACS ARE REQUIRED TO BE PERPENDICULAR, OR MUST ORIGINATE IN MANHOLE AND TERMINATE AT RIGHT-OF-WAY LINE.
3. ALL SERVICES TYING INTO DUCTILE IRON MAINS SHALL BE CONSTRUCTED OF CLASS 50, DIP, WITH PROTECTO 401 CERAMIC EPOXY LINING.
4. 10' UTILITIES EASEMENT PROVIDED ALONG THE FRONTAGE OF ALL LOTS AND AS SHOWN.
5. NO FLEXIBLE COUPLINGS SHALL BE USED.
6. ALL CLEANOUTS TO BE LOCATED IN THE CENTER OF THE LOT.

NOTES:
1. ALL SEWER SERVICES FROM BUILDINGS TO BE 6" PVC @ 1.0% MIN.

For each open utility cut of City streets, a $325 permit shall be required from the City prior to occupancy and/or project acceptance.

Approved Construction Plan

Name Date

Planning _____

Traffic _____

Fire _____

CITY OF WILMINGTON NORTH CAROLINA
Public Services • Engineering Division
APPROVED STORMWATER MANAGEMENT PLAN
Date: _____ Permit # _____
Signed: _____

NORTH CAROLINA PROFESSIONAL SEAL 031315 ENGINEER CARRY S. PAPE
05/22/2015

GRAPHIC SCALE
50 0 25 50 100
1 inch = 50 ft.

No.	Revision	Date	By

Designer GSP	Scale 1" = 50'
Drawn By GSP	Date March 2015
License # P-0718	Job No. 2014-0006

BELLE MEADE MIXED-USE

Wilmington New Hanover County North Carolina

UTILITY PROFILES

PREPARED FOR:
BELLE MEADE DEVELOPMENT PARTNERS, LLC
6626-C GORDON ROAD
WILMINGTON, NC 28411
910-799-3006

GSP CONSULTING, PLLC
ENGINEERING
6626 Gordon Road Unit C Wilmington, North Carolina 28411 tel: 910-442-7870 fax: 910-799-6659

Sheet No. C-4.1

PER THE REQUIREMENTS OF THE STORMWATER PERMIT, THE FOLLOWING SHALL OCCUR PRIOR TO ISSUANCE OF A CERTIFICATE OF OCCUPANCY OR OPERATION OF THE PERMITTED FACILITY.

- AS-BUILT DRAWINGS FOR ALL STORMWATER MANAGEMENT FACILITIES SHALL BE SUBMITTED TO THE CITY OF WILMINGTON ENGINEERING DIVISION.
- AN ENGINEER'S CERTIFICATION SHALL ALSO BE SUBMITTED, ALONG WITH ALL SUPPORTING DOCUMENTATION THAT SPECIFIES, UNDER SEAL THAT THE AS-BUILT STORMWATER MEASURES, CONTROLS AND DEVICES ARE IN COMPLIANCE WITH THE APPROVED STORMWATER MANAGEMENT PLANS.
- A FINAL INSPECTION BY CITY OF WILMINGTON ENGINEERING PERSONNEL.

ALL REQUIRED EASEMENT MAPS SHALL BE REVIEWED BY CITY STAFF AND RECORDED PRIOR TO ISSUANCE OF A CERTIFICATE OF OCCUPANCY.

DRAINAGE NOTES

1. ALL IMPERVIOUS SURFACES TO DRAIN TO EXISTING WET DETENTION BASIN.
2. ALL STORM PIPE CONNECTING TO CITY OF WILMINGTON DRAINAGE STRUCTURES TO BE 12" MINIMUM.
3. NO ROOF DRAIN IS TO CONNECT DIRECTLY TO CITY OF WILMINGTON DRAINAGE STRUCTURE.

GRADING NOTES:

1. ALL STORM INLETS WITHIN DISTURBANCE AREA TO HAVE EITHER INLET PROTECTION OR A SILT SACK INSTALLED SEE DETAILS ON SHEET C-9.

PUMPING NOTES:

1. SEDIMENT LADEN PUMP DISCHARGE IS ONLY ALLOWED IF ITS DISCHARGED AT OR BELOW 50 NTU'S WITHOUT EROSIVE VELOCITY AT THE POINT OF DISCHARGE, INFILTRATED ONSITE OUTSIDE ANY WETLANDS WITH NO RUNOFF, OR BY USING PAMS WITH A LIQUID INJECTION SYSTEM DISCHARGING INTO A DIRT BAG PLACED ON A STABLE SURFACE.

EROSION CONTROL NOTES

1. SEDIMENT BASIN WILL BE PUMPED DOWN BY MECHANICAL MEANS WHEN SEDIMENT REACHES 50% STORAGE ELEVATION AND MUCKED OUT.
2. PRIOR TO USE AS AN WET DETENTION BASIN, SEDIMENT BASIN WILL BE MUCKED OUT.
3. PRIOR TO THE CREATION OF ANY IMPERVIOUS SURFACES THE FINAL POND DESIGN SHOULD BE BUILT. SEE SHEET C-6 FOR BASIN DETAILS.
4. ALL OUTLET STRUCTURE OPENINGS TO BE CLOSED UNTIL SKIMMERS ARE REMOVED.

SEDIMENT BASIN CALCULATIONS

SEDIMENT TRAPPING DEVICE	DRAINAGE AREA (AC)	REQUIRED STORAGE (1,800CF/AC)	PROVIDED STORAGE (CF)	PEAK Q10 FLOW (CFS)	REQUIRED AREA (325 SF/CFS)	PROVIDED AREA (SF)	SKIMMER SIZE (in)
EX. SEDIMENT BASIN	19.15	34,467	36,189	36.19	11,762	34,409	2.9

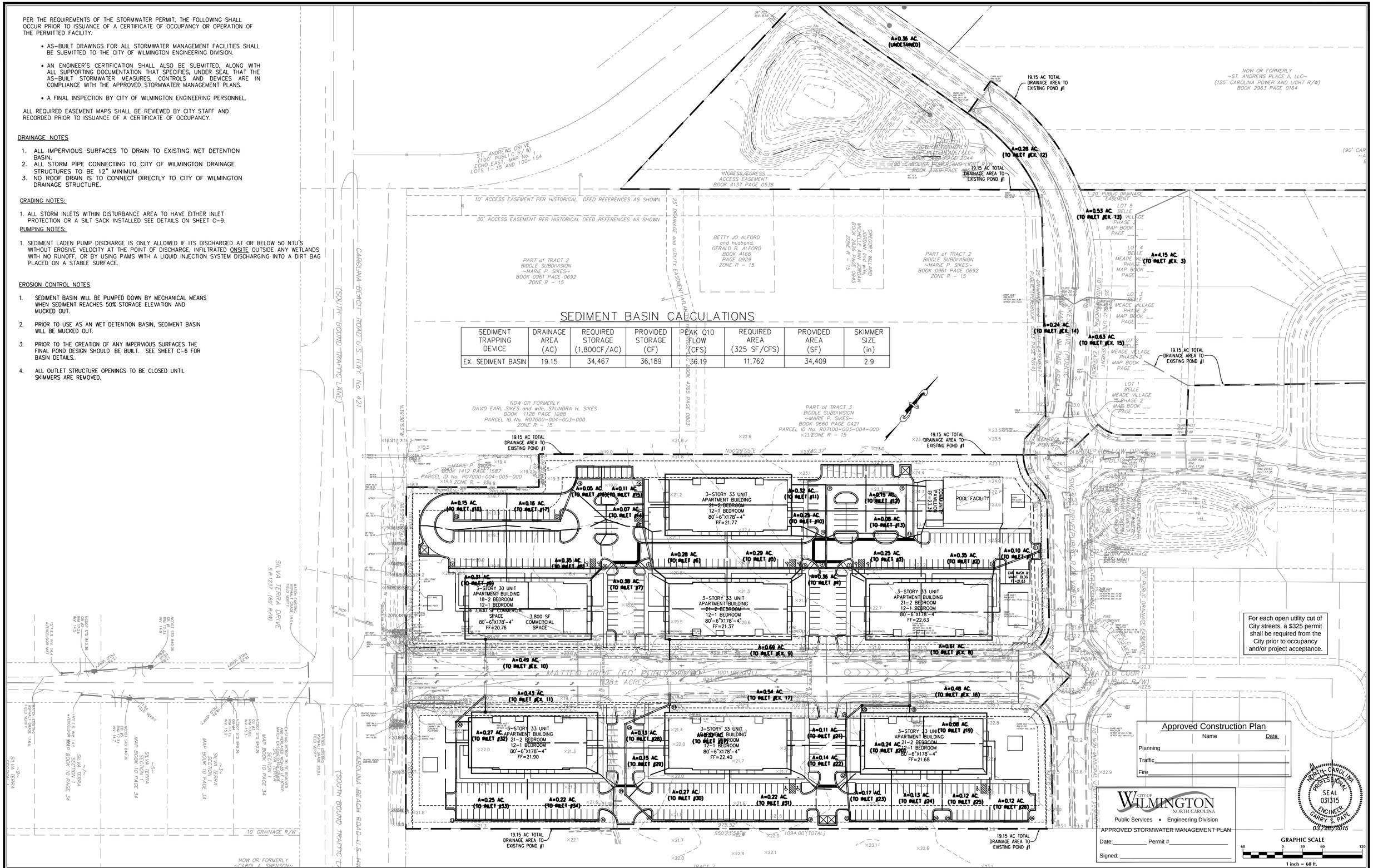

For each open utility cut of City streets, a $325 permit shall be required from the City prior to occupancy and/or project acceptance.

Approved Construction Plan

Name Date

Planning_____

Traffic_____

Fire_____

CITY OF WILMINGTON NORTH CAROLINA

Public Services • Engineering Division

APPROVED STORMWATER MANAGEMENT PLAN

Date:_____ Permit #_____

Signed: _____

NORTH CAROLINA PROFESSIONAL SEAL 031315 ENGINEER CARRY S. PATE 03/20/2015

GRAPHIC SCALE

60 0 30 60 120

1 inch = 60 ft.

No.	Revision	Date	By

Designer GSP	Scale 1" = 60'
Drawn By GSP	Date March 2015
License # P-0718	Job No. 2014-0006

BELLE MEADE MIXED-USE

Wilmington New Hanover County North Carolina

OVERALL DRAINAGE PLAN

PREPARED FOR:
BELLE MEADE DEVELOPMENT PARTNERS, LLC
6626-C GORDON ROAD
WILMINGTON, NC 28411
910-799-3006

GSP CONSULTING, PLLC
ENGINEERING
6626 Gordon Road Unit C Wilmington, North Carolina 28411 tel: 910-442-7870 fax: 910-799-6659

Sheet No. C-5.1

N50°29'05"E 730.37'

~MARIE P. ~
BOOK 1412 PAGE 1587
PARCEL ID No. R07000-004-005-000

N50°25'51"E 200.00'

3-STORY 33 UNIT
APARTMENT BUILDING
21-2 BEDROOM
12-1 BEDROOM
80'-6"X178'-4"
FF=21.77

COMMUNITY PAVILION
FF=23.39

POOL FACILITY

3-STORY 30 UNIT
APARTMENT BUILDING
18-2 BEDROOM
12-1 BEDROOM
& 3,800 SF COMMERCIAL
80'-6"X178'-4"
FF=20.76

3,800 SF
COMMERCIAL
SPACE

3-STORY 33 UNIT
APARTMENT BUILDING
21-2 BEDROOM
12-1 BEDROOM
80'-6"X178'-4"
FF=21.37

3-STORY 33 UNIT
APARTMENT BUILDING
21-2 BEDROOM
12-1 BEDROOM
80'-6"X178'-4"
FF=22.63

WASH & MAINT. BLDG
FF=21.83

3-STORY 33 UNIT
APARTMENT BUILDING
21-2 BEDROOM
12-1 BEDROOM
80'-6"X178'-4"
FF=21.90

3-STORY 33 UNIT
APARTMENT BUILDING
21-2 BEDROOM
12-1 BEDROOM
80'-6"X178'-4"
FF=22.40

3-STORY 33 UNIT
APARTMENT BUILDING
21-2 BEDROOM
12-1 BEDROOM
80'-6"X178'-4"
FF=21.68

MATTEO DRIVE (60' PUBLIC) S50°30'00"W 1001.19'(TOTAL)

S50°23'58"W 1094.00'(TOTAL)

TRACT 7
BIDDLE SUBDIVISION

128± ACRES

923.71'

898.25'

For each open utility cut of City streets, a $325 permit shall be required from the City prior to occupancy and/or project acceptance.

Approved Construction Plan

Name	Date
Planning	
Traffic	
Fire	

CITY OF WILMINGTON NORTH CAROLINA
Public Services • Engineering Division
APPROVED STORMWATER MANAGEMENT PLAN
Date: _____ Permit # _____
Signed: _____

NORTH CAROLINA PROFESSIONAL ENGINEER SEAL 031315 CARRY S. PARK 03/20/2015

GRAPHIC SCALE
30 0 15 30 60
1 inch = 30 ft.

No.	Revision	Date	By

Designer GSP	Scale 1" = 30'
Drawn By GSP	Date March 2015
License # P-0718	Job No. 2014-0006

BELLE MEADE MIXED-USE

Wilmington New Hanover County North Carolina

GRADING & EROSION & SEDIMENT CONTROL PLAN

PREPARED FOR:
BELLE MEADE DEVELOPMENT PARTNERS, LLC
6626-C GORDON ROAD
WILMINGTON, NC 28411
910-799-3006

GSP CONSULTING, PLLC
ENGINEERING
6626 Gordon Road Unit C Wilmington, North Carolina 28411 tel: 910-442-7870 fax: 910-799-6659

Sheet No.
C-5.2

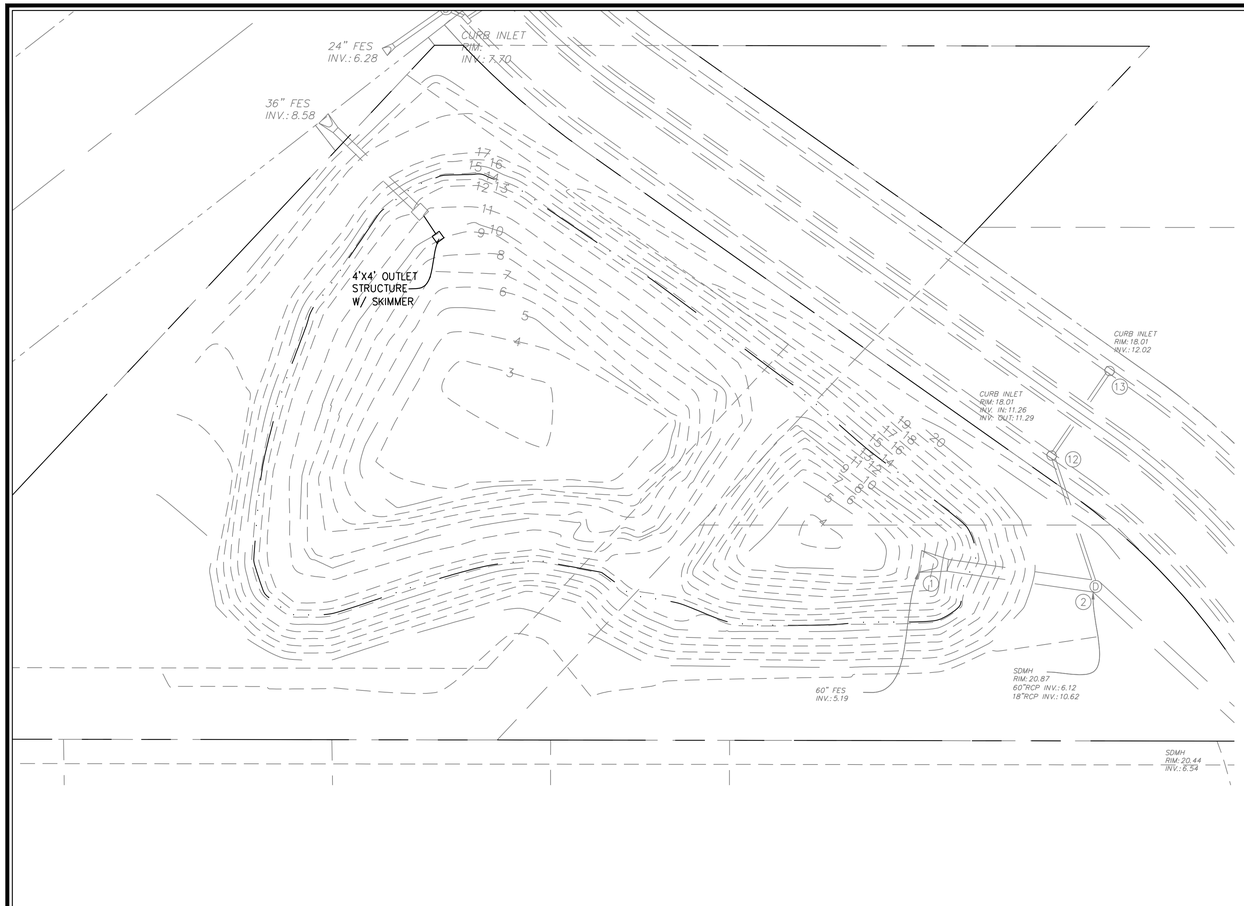

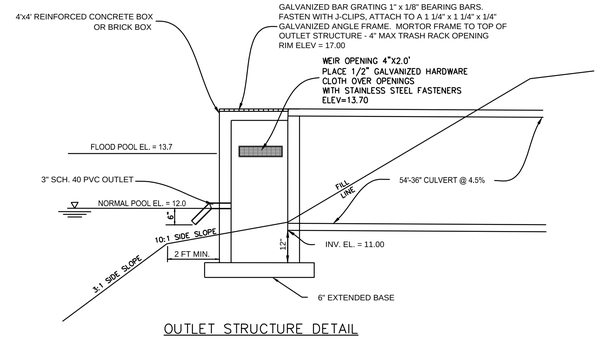

OUTLET STRUCTURE DETAIL
N.T.S.

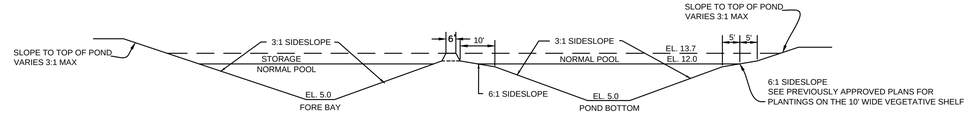

NORMAL POOL ELEVATION	EMERGENCY OUTLET	TOP OF BOX	DENR TEMP POOL	BOTTOM OF FOREBAY	BOTTOM OF POND	TOP OF BANK
12.00	17.50	17.00	13.70	5.00	5.00	18.00

POND CROSS-SECTION
N.T.S.

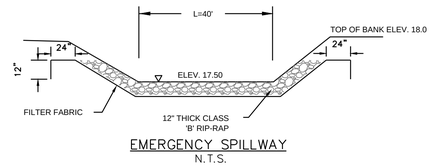

EMERGENCY SPILLWAY
N.T.S.

Approved Construction Plan

Name Date

Planning_____

Traffic_____

Fire_____

CITY OF WILMINGTON NORTH CAROLINA

Public Services • Engineering Division

APPROVED STORMWATER MANAGEMENT PLAN

Date:_____ Permit #_____

Signed: _____

For each open utility cut of City streets, a $325 permit shall be required from the City prior to occupancy and/or project acceptance.

NORTH CAROLINA PROFESSIONAL SEAL 031315 ENGINEER GARRY S. PAPE 05/04/2015

GRAPHIC SCALE

20 0 10 20 40

1 inch = 20 ft.

No.	Revision	Date	By

Designer GSP	Scale 1" = 20'
Drawn By GSP	Date March 2015
License # P-0718	Job No. 2014-0006

BELLE MEADE MIXED-USE

Wilmington New Hanover County North Carolina

WET DETENTION DETAILS EXISTING POND #1

PREPARED FOR:

BELLE MEADE DEVELOPMENT PARTNERS, LLC
6626-C GORDON ROAD
WILMINGTON, NC 28411
910-799-3006

GSP CONSULTING, PLLC
ENGINEERING
6626 Gordon Road Unit C Wilmington, North Carolina 28411 tel: 910-442-7870 fax: 910-799-6659

Sheet No.
C-6

GENERAL NOTES

I. LOCATION OF WHEELCHAIR RAMPS:
1. IN ACCORDANCE WITH THE RATIFIED HOUSE BILL 1296, ALL STREET CURBS IN NORTH CAROLINA BEING CONSTRUCTED OR RECONSTRUCTED FOR MAINTENANCE PROCEDURES, TRAFFIC OPERATIONS, REPAIRS, CORRECTION OF UTILITIES OR ALTERED FOR ANY REASON AFTER SEPTEMBER 1, 1973 SHALL PROVIDE WHEELCHAIR RAMPS FOR THE PHYSICALLY HANDICAPPED AT ALL INTERSECTIONS WHERE BOTH CURB AND GUTTERS AND SIDEWALKS ARE PROVIDED AND AT OTHER MAJOR POINTS OF PEDESTRIAN FLOW.
2. WHEELCHAIR RAMPS SHOULD BE LOCATED AS INDICATED IN DETAIL DRAWINGS, HOWEVER EXISTING LIGHT POLES, FIRE HYDRANTS, DROP INLETS, ETC. MAY AFFECT PLACEMENT.

II. CONSTRUCTION NOTES:
1. NO SLOPE SHALL EXCEED 1"=1" (12:1) ON THE RAMP OR SIDEWALK.
2. IN NO CASE SHALL THE WIDTH OF WHEELCHAIR RAMPS BE LESS THAN 40" (3'-4"). WIDTHS MAY EXCEED 40" IF NECESSARY.
3. USE CLASS "A" CONCRETE WITH THE SURFACE HAVING A ROUGH, NON-SKID TYPE FINISH.
4. 1/2" EXPANSION JOINT WILL BE REQUIRED WHERE THE CONCRETE WHEELCHAIR RAMP JOINS ANY RIGID PAVEMENT OR STRUCTURE.
5. CONSTRUCTION METHODS SHALL CONFORM WITH THOSE OF THE GOVERNING BODY WHICH HAS JURISDICTION OF THE PARTICULAR STREET.

III. ADDITIONAL NOTES:
1. THE INSIDE PEDESTRIAN CROSSWALK LINES SHALL BE ESTABLISHED BY BISECTING THE INTERSECTION RADII WHERE MARKED (SEE NOTE 6).
2. THE WHEELCHAIR RAMP SHALL BE LOCATED SO THAT THE BEGINNING OF THE WHEEL CHAIR RAMP WILL BE TWO FEET FROM THE INSIDE PEDESTRIAN CROSSWALK LINE.
3. THE WIDTH OF THE PEDESTRIAN CROSSWALK SHALL BE 10 FEET UNLESS A GREATER WIDTH IS REQUIRED TO ACCOMMODATE THE PEDESTRIAN TRAFFIC.
4. STOP BARS SHALL BE USED WHERE IT IS IMPORTANT TO INDICATE THE POINT BEHIND WHICH VEHICLES ARE REQUIRED TO STOP IN COMPLIANCE WITH A TRAFFIC SIGNAL, STOP SIGN, OR OTHER LEGAL REQUIREMENTS.
5. PARKING SHALL BE ELIMINATED A MINIMUM OF 20 FEET BACK OF PEDESTRIAN CROSSWALK.
6. ALL PAVEMENT MARKINGS SHALL BE IN ACCORDANCE WITH THE LATEST EDITION OF THE MANUAL OF UNIFORM TRAFFIC CONTROL DEVICES, PUBLISHED BY THE FEDERAL HIGHWAY ADMINISTRATION. THIS IS AVAILABLE FROM THE SUPERINTENDENT OF DOCUMENTS, U.S GOVERNMENT PRINTING OFFICE, WASHINGTON, D.C. 20402.

GUIDELINES FOR WHEELCHAIR RAMPS

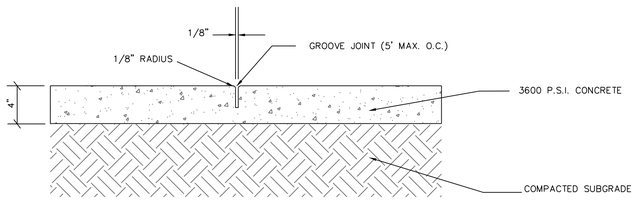

CONCRETE SIDEWALK DETAIL

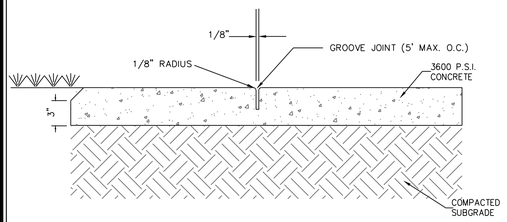

SIDEWALK ADJACENT TO GRASSED AREAS AND PLANTERS

CONCRETE SIDEWALK

N.T.S.

GENERAL NOTES:
A GROOVE JOINT 1" DEEP WITH 1/8" RADII SHALL BE REQUIRED IN THE CONCRETE SIDEWALK AT 5' INTERVALS. ONE 1/2" EXPANSION JOINT WILL BE REQUIRED AT 45' INTERVALS. A 1/2" EXPANSION JOINT WILL BE REQUIRED WHERE THE SIDEWALK ABUTS ANY CURB & GUTTER AND ANY RIGID STRUCTURES. IN SIDEWALKS & PLAZA AREAS EXPANSION JOINTS ARE REQUIRED AT NO GREATER THAN 30' INTERVALS CONCRETE SHALL BE 3600 PSI. IN 28 DAYS.

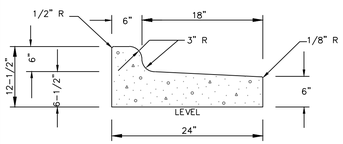

(TO BE USED WHEN PAVEMENT IS SLOPED AWAY FROM ISLAND 1/4' : 1'-0" SLOPE OR AS SHOWN ON PLANS)

24" CURB AND GUTTER (REVERSE SLOPE)

CURB AND GUTTER

N.T.S.

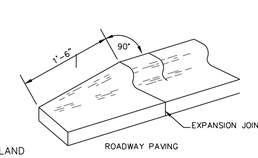

24" CURB & GUTTER TERMINATION DETAIL

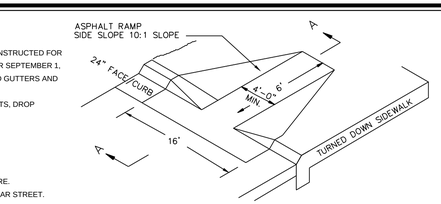

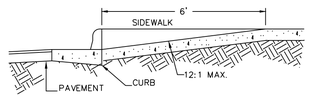

SECTION A–A
WHEELCHAIR RAMP (DROP CURB)

WHEELCHAIR RAMP
N.T.S.

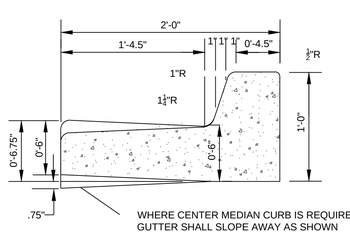

WHERE CENTER MEDIAN CURB IS REQUIRED GUTTER SHALL SLOPE AWAY AS SHOWN

STANDARD CURB SECTION TYPE "A"
SD 7-01
NOT TO SCALE

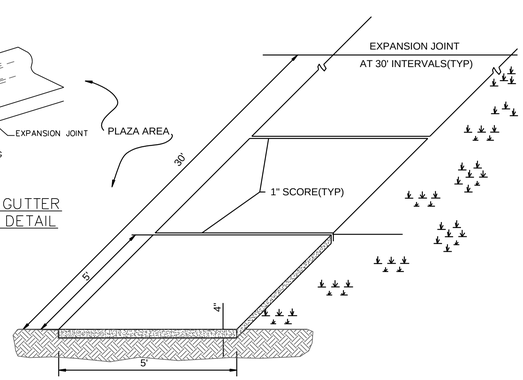

STANDARD SIDEWALK DETAIL
SD 8-15
NOT TO SCALE

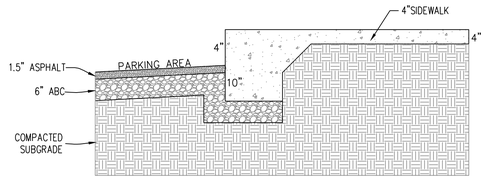

TURNDOWN SIDEWALK DETAIL
N.T.S.

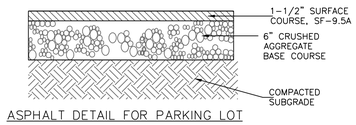

ASPHALT DETAIL FOR PARKING LOT

PAVEMENT DETAIL
N.T.S.

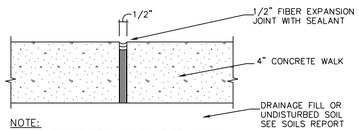

NOTE:
PROVIDE CONSTRUCTION JOINTS AT 25' O.C. MAX. IN EITHER DIRECTION WITH SQUARE FOOTAGE LESS THAN 400 S.F. AND AT CURVES, TANGENTS, AND CORNERS (UNLESS NOTED OTHERWISE).

CONSTRUCTION JOINT

N.T.S.

NOTE:
THE CRITICAL ROOT ZONE (CRZ) OF A TREE IS WHERE THE MAJORITY OF A TREE'S ROOTS LAY, 85% OF MOST TREE ROOTS ARE FOUND IN THE TOP 24" OF THE SOIL AND SUPPLY THE MAJORITY OF NUTRIENTS AND WATER. GENERALLY, ROOTS SPREAD OUT 2-3X THE HEIGHT OF THE TREE.

NOTE:
CROWN OF THE TREE IS NEEDED FOR LEAF GROWTH TO PRODUCE OXYGEN, FILTER THE AIR, REDUCE WIND AND SOFTEN NOISE. DO NOT DISFIGURE CROWN WITH INTENSIVE PRUNING.

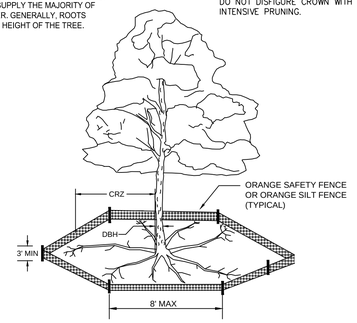

NOTES:
1. PROTECT CRITICAL ROOT ZONE (CRZ) OF TREES PRIOR TO CONSTRUCTION. CLEARLY MARK THE TREES AND ERECT A PROTECTIVE BARRIER AT THE CRZ. BARRIER SHALL BE MAINTAINED UNTIL CONSTRUCTION IS COMPLETE.
2. CRZ RADIUS IS 1 FT PER INCH OF TREE DIAMETER AT BREAST HEIGHT (DBH).
3. IF CONSTRUCTION OCCURS WITHIN THE CRZ, AT LEAST 12" OF MULCH AND/OR LOGGING MATTS SHALL BE PLACED WHERE MACHINERY MANEUVERS TO REDUCE SOIL COMPACTION IN THIS ZONE.
4. WHERE SIDEWALKS AND PATHWAYS PASS WITHIN CRZ, EXTRA CARE SHALL BE TAKEN TO AVOID DAMAGE TO THE ROOTS. ALTERNATE CONSTRUCTION METHODS, SUCH AS A REINFORCED SIDEWALK, SHALL BE IMPLEMENTED AS NECESSARY.
5. FOR ALL TREES, CUTTING OF LARGE STRUCTURAL ROOTS LOCATED NEAR THE BASE OF THE TRUNK IS PROHIBITED. DO NOT COMPACT SOIL BENEATH TREES. NO VEHICLE SHALL BE ALLOWED TO PARK UNDER TREES. NO MATERIALS OR EQUIPMENT SHALL BE STORED BENEATH TREES. DAMAGING THE BARK WITH LAWNMOWERS, CONSTRUCTION EQUIPMENT, OR ANYTHING ELSE IS PROHIBITED. CONTRACTOR SHALL REPAIR DAMAGE TO TREES.
6. FAILING TO INSTALL OR MAINTAIN PROTECTION MEASURES SHALL RESULT IN A STOP WORK ORDER AND FINE OF $500/DAY. DISTURBANCE OTHER THAN THAT ALLOWED ON THE APPROVED PLAN WILL REQUIRE OWNER TO POST A LETTER OF CREDIT FOR 3 YRS FOR TREE MITIGATION.

	STANDARD DETAIL	CITY OF WILMINGTON NORTH CAROLINA
DATE: JAN, 2015	TREE PROTECTION DURING CONSTRUCTION	CITY OF WILMINGTON ENGINEERING PO BOX 1810 WILMINGTON, NC 28402 (910) 341-7807
DRAWN BY JSR	SHEET 1 of 2	SD 15-09
CHECKED BY RDG, P.E.		
SCALE NOT TO SCALE		

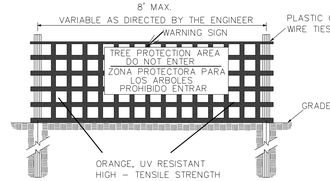

FRONT VIEW

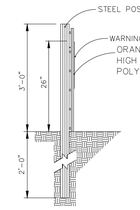

SIDE VIEW

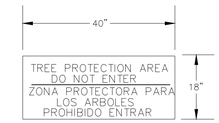

WARNING SIGN DETAIL

NOTES:
1. THE TREE PROTECTION FENCING SHALL NOT BE VIOLATED FOR THE ENTIRE DURATION OF THE PROJECT WITHOUT APPROVAL FROM URBAN FORESTRY STAFF.
2. WARNING SIGNS TO BE MADE OF DURABLE, WEATHERPROOF MATERIAL. LETTERS TO BE 3" HIGH, MINIMUM, CLEARLY LEGIBLE AND SPACED AS DETAILED.
3. SIGNS SHALL BE PLACED AT 50' MAXIMUM INTERVALS. PLACE A SIGN AT EACH END OF LINEAR TREE PROTECTION AND 50' ON CENTER THEREAFTER. FOR TREE PROTECTION AREAS LESS THAN 100' IN PERIMETER, PROVIDE NO LESS THAN TWO SIGNS PER PROTECTION AREA.
4. ATTACH SIGNS SECURELY TO FENCE POSTS AND FABRIC. MAINTAIN TREE PROTECTION FENCE AND SIGNS THROUGHOUT DURATION OF PROJECT.
5. TREE PROTECTION FENCING AND SIGNAGE SHALL BE REMOVED AFTER CONSTRUCTION.
6. ADDITIONAL SIGNS MAY BE REQUIRED BY CITY OF WILMINGTON, BASED ON ACTUAL FIELD CONDITIONS.

	STANDARD DETAIL	CITY OF WILMINGTON NORTH CAROLINA
DATE: JAN, 2015	TREE PROTECTION DURING CONSTRUCTION	CITY OF WILMINGTON ENGINEERING PO BOX 1810 WILMINGTON, NC 28402 (910) 341-7807
DRAWN BY JSR	SHEET 2 of 2	SD 15-09
CHECKED BY RDG, P.E.		
SCALE NOT TO SCALE		

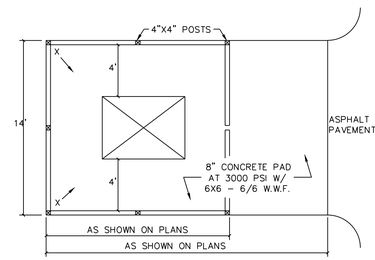

PLAN

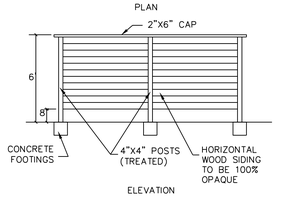

ELEVATION

DUMPSTER PAD & ENCLOSURE DETAIL
N.T.S.

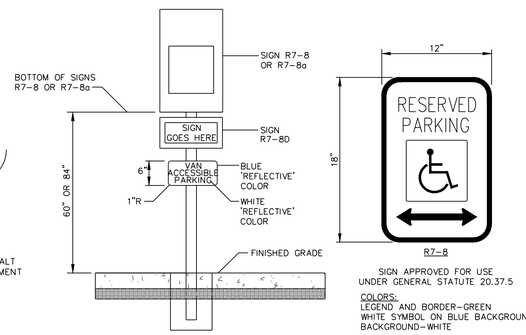

SIGN APPROVED FOR USE UNDER GENERAL STATUTE 20.37.5

COLORS:
LEGEND AND BORDER–GREEN
WHITE SYMBOL ON BLUE BACKGROUND
BACKGROUND–WHITE

HANDICAP PARKING SIGNAGE
N.T.S.

Approved Construction Plan

	Name	Date
Planning		
Traffic		
Fire		

For each open utility cut of City streets, a $325 permit shall be required from the City prior to occupancy and/or project acceptance.

CITY OF WILMINGTON NORTH CAROLINA
Public Services • Engineering Division
APPROVED STORMWATER MANAGEMENT PLAN
Date:_____ Permit #_____
Signed: _____

NORTH CAROLINA PROFESSIONAL SEAL 031315 ENGINEER GARRY S. PAPE
05/18/2015

No.	Revision	Date	By

Designer GSP	Scale 1" = 30'
Drawn By GSP	Date March 2015
License # P-0718	Job No. 2014-0006

BELLE MEADE MIXED-USE

Wilmington New Hanover County North Carolina

STANDARD DETAILS

PREPARED FOR:
BELLE MEADE DEVELOPMENT PARTNERS, LLC
6626-C GORDON ROAD
WILMINGTON, NC 28411
910-799-3006

GSP CONSULTING, PLLC
ENGINEERING
6626 Gordon Road Unit C Wilmington, North Carolina 28411 tel: 910-442-7870 fax: 910-799-6659

Sheet No. C-7

STATE OF NORTH CAROLINA DEPT. OF TRANSPORTATION DIVISION OF HIGHWAYS RALEIGH, N.C.

7-06

ENGLISH STANDARD DRAWING FOR
FRAME, GRATES, AND HOOD
FOR USE ON STANDARD CATCH BASIN

SHEET 1 OF 2
840.03

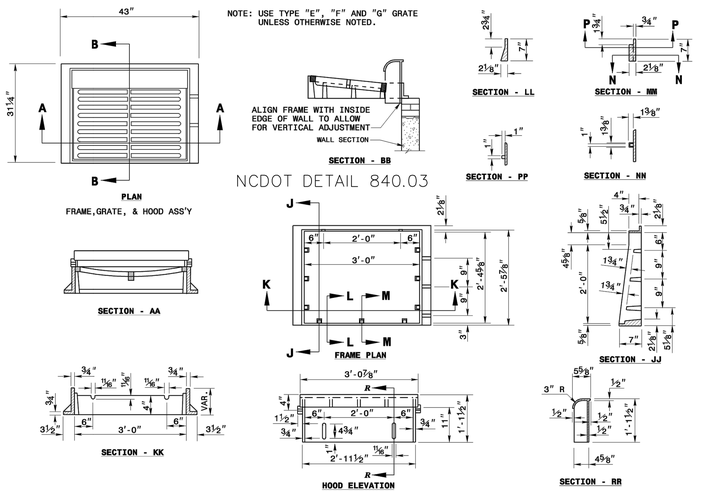

STATE OF NORTH CAROLINA DEPT. OF TRANSPORTATION DIVISION OF HIGHWAYS RALEIGH, N.C.

7-06

ENGLISH STANDARD DRAWING FOR
FRAME, GRATES, AND HOOD
FOR USE ON STANDARD CATCH BASIN

SHEET 1 OF 2
840.03

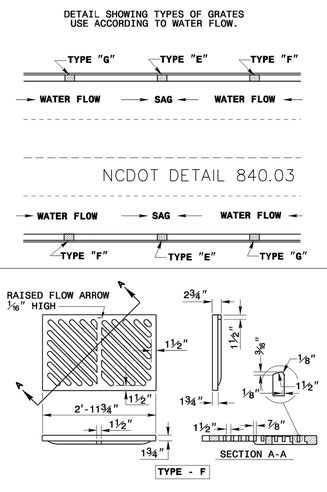

STATE OF NORTH CAROLINA DEPT. OF TRANSPORTATION DIVISION OF HIGHWAYS RALEIGH, N.C.

7-06

ENGLISH STANDARD DRAWING FOR
FRAME, GRATES, AND HOOD
FOR USE ON STANDARD CATCH BASIN

SHEET 2 OF 2
840.03

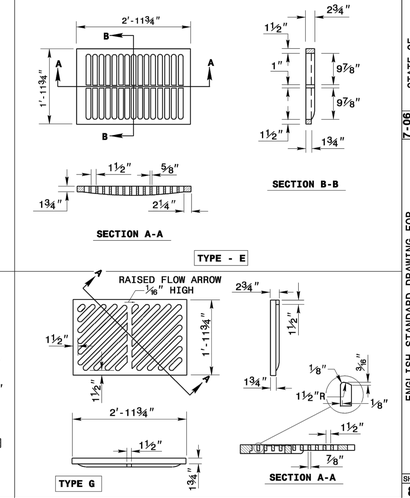

STORM TABLE

FROM	TO	LENGTH (ft)	DIAMETER (in)	SLOPE (%)	INV. DN (ft)	INV. UP (ft)	RIM (ft)	MATERIAL
EX 2	EX 1	74	60	1.26	5.19	6.12	20.87	EX. RCP
EX 3	EX 2	97	60	0.43	6.12	6.54	20.44	EX. RCP
EX 4	EX 3	165	60	0.18	6.54	6.84	20.97	EX. RCP
EX 5	EX 4	305	48	0.60	6.84	8.68	23.14	EX. RCP
1	EX 5	74	48	0.62	8.68	9.14	20.98	EX. RCP
EX 6	1	108	48	0.63	9.14	9.82	21.77	EX. RCP
EX 7	EX 6	75	48	0.08	9.82	9.88	21.48	EX. RCP
EX 8	EX 7	143	48	0.54	9.88	10.65	19.00	EX. RCP
EX 9	EX 8	361	48	0.36	10.65	11.94	17.94	EX. RCP
EX 10	EX 9	278	36	0.61	11.94	13.63	18.10	EX. RCP
EX 11	EX 10	58	30	0.81	13.63	14.10	18.18	EX. RCP
EX 12	EX 2	58	18	1.16	10.62	11.29	18.01	EX. RCP
EX 13	EX 12	43	18	1.70	11.29	12.02	18.01	EX. RCP
EX 14	EX 4	37	18	2.67	15.14	16.12	20.45	EX. RCP
EX 15	EX 14	41	18	3.06	16.12	17.36	20.45	EX. RCP
2	1	73	36	0.30	11.14	11.36	20.87	HDPE
3	2	214	30	0.30	11.36	12.00	20.38	HDPE
4	3	40	30	0.30	12.00	12.12	18.80	HDPE
5	4	37	30	0.30	12.12	12.23	19.11	HDPE
6	5	225	30	0.30	12.23	12.91	19.29	HDPE
7	6	40	24	0.30	12.91	13.03	18.80	HDPE
8	7	37	15	0.30	13.03	13.14	19.08	HDPE
9	8	229	15	0.30	13.14	13.83	19.40	HDPE
10	4	47	18	0.30	12.12	12.26	19.29	HDPE
11	10	79	18	0.30	12.26	12.50	19.49	HDPE
12	11	120	15	0.30	12.50	12.86	21.20	HDPE
13	12	79	15	0.30	12.86	13.10	21.80	HDPE
14	6	63	24	0.30	12.91	13.10	19.44	HDPE
15	14	72	18	0.31	13.10	13.32	19.44	HDPE
16	15	101	15	0.30	13.32	13.62	19.72	HDPE
17	16	67	15	0.30	13.62	13.82	19.39	HDPE
18	17	160	15	0.30	13.82	14.30	19.39	HDPE
EX 16	EX 8	48	36	0.31	10.89	11.04	18.91	EX. RCP
19	EX 16	20	24	0.30	12.04	12.10	21.00	HDPE
20	19	72	18	0.31	12.10	12.32	21.00	HDPE
21	20	31	18	0.29	12.32	12.41	20.25	HDPE
22	21	81	15	0.30	12.41	12.65	19.51	HDPE
23	22	73	15	0.30	12.65	12.87	19.40	HDPE
24	23	125	15	0.30	12.87	13.25	20.01	HDPE
25	24	28	15	0.28	13.25	13.33	20.01	HDPE
26	25	116	15	0.30	13.33	13.68	20.01	HDPE
EX 17	EX 9	51	24	0.63	12.30	12.62	17.96	EX. RCP
27	EX 17	16	18	0.31	12.62	12.67	20.50	HDPE
28	27	73	18	0.30	12.67	12.89	19.45	HDPE
29	28	106	15	0.30	12.89	13.21	19.80	HDPE
30	29	56	15	0.30	13.21	13.38	19.50	HDPE
31	30	233	15	0.30	13.38	14.08	19.65	HDPE
32	EX 11	59	18	0.30	14.60	14.78	21.03	HDPE
33	32	148	15	0.30	14.78	15.22	19.54	HDPE
34	33	215	15	0.30	15.22	15.87	19.65	HDPE

STATE OF NORTH CAROLINA DEPT. OF TRANSPORTATION DIVISION OF HIGHWAYS RALEIGH, N.C.

7-06

ENGLISH STANDARD DRAWING FOR
CONCRETE CATCH BASIN
12" THRU 54" PIPE

SHEET 1 OF 2
840.02

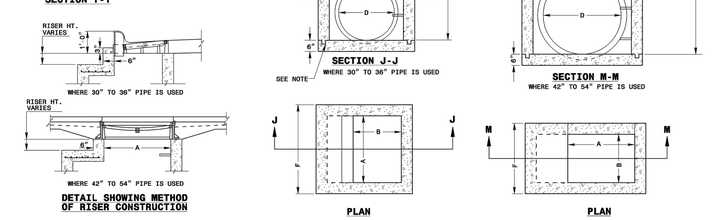

STATE OF NORTH CAROLINA DEPT. OF TRANSPORTATION DIVISION OF HIGHWAYS RALEIGH, N.C.

7-06

ENGLISH STANDARD DRAWING FOR
CONCRETE JUNCTION BOX
(WITH OPTIONAL MANHOLE)
12" THRU 66" PIPE

SHEET 1 OF 1
840.31

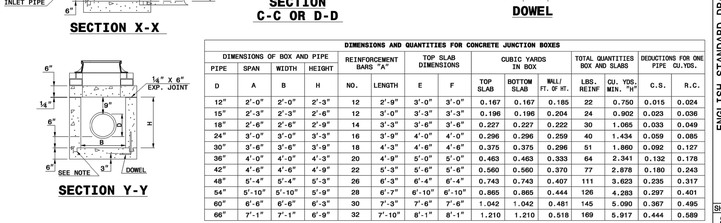
E
6"
A
6"
OPTIONAL MANHOLE
Y
X
X
6"
B
F
Y
PLAN
SEE STANDARD 840.54 FOR MANHOLE COVER & FRAME OPTIONAL
BRICK MAY BE USED TO ADJUST FRAME & COVER TO SURFACE ELEVATION MAX. 1'
6"
14"
9"
C
D
OUTLET PIPE
INLET PIPE
6"
SECTION X-X
6"
14" X 6" EXP. JOINT
14"
9"
C
D
H
6"
SEE NOTE
3"
DOWEL
SECTION Y-Y
E
C
D
D
F
#4 BARS "A" SPACED 6" C. TO C.
3"
3"
3"
3"
C
SECTION C-C OR D-D
GENERAL NOTES:
CHAMFER ALL EXPOSED CORNERS 1".
USE CLASS "B" CONCRETE THROUGHOUT.
OPTIONAL CONSTRUCTION - MONOLITHIC POUR, 2" KEYWAY, OR #4 BAR DOWELS AT 12" CENTERS AS DIRECTED BY THE ENGINEER.
USE FORMS TO CONSTRUCT THE BOTTOM SLAB.
IF REINFORCED CONCRETE PIPE IS SET IN BASE SLAB OF BOX, ADD TO BASE AS SHOWN ON STANDARD NO. 840.00.
PROVIDE ALL JUNCTION BOXES OVER 3'-6" IN DEPTH WITH STEPS 12" ON CENTERS IN ACCORDANCE WITH STD. NO. 840.66.
ADJUST THE STEEL, CONCRETE AND BRICK MASONRY QUANTITIES TO INCLUDE THE ADDITION OF THE MANHOLE (I.E. DIAGONAL BARS SHORTENED AROUND OPENING IN TOP SLAB, ADDITIONAL VARIABLE HEIGHT BRICK MASONRY, OPENING IN TOP SLAB.)
MAX. DEPTH OF THIS STRUCTURE FROM TOP OF BOTTOM SLAB TO TOP ELEVATION IS 12 FEET.
NCDOT DETAIL 840.31
#4 BAR
12"
6"
DOWEL
DIMENSIONS AND QUANTITIES FOR CONCRETE JUNCTION BOXES

DIMENSIONS OF BOX AND PIPE				REINFORCEMENT BARS "A"		TOP SLAB DIMENSIONS		CUBIC YARDS IN BOX			TOTAL QUANTITIES BOX AND SLABS	DEDUCTIONS FOR ONE PIPE CU.YDS.	
PIPE D	SPAN A	WIDTH B	HEIGHT H	NO.	LENGTH	E	F	TOP SLAB	BOTTOM SLAB	WALL/ FT. OF HT.	LBS. REINF	CU. YDS. "H"	C.S.	R.C.
12"	2'-0"	2'-0"	2'-3"	12	2'-9"	3'-0"	3'-0"	0.167	0.167	0.185	22	0.750	0.015	0.024
15"	2'-3"	2'-3"	2'-6"	12	3'-0"	3'-3"	3'-3"	0.196	0.196	0.204	24	0.902	0.023	0.036
18"	2'-6"	2'-6"	2'-9"	14	3'-3"	3'-6"	3'-6"	0.227	0.227	0.222	30	1.065	0.033	0.049
24"	3'-0"	3'-0"	3'-3"	16	3'-9"	4'-0"	4'-0"	0.296	0.296	0.259	40	1.434	0.059	0.085
30"	3'-6"	3'-6"	3'-9"	18	4'-3"	4'-6"	4'-6"	0.375	0.375	0.296	51	1.860	0.092	0.127
36"	4'-0"	4'-0"	4'-3"	20	4'-9"	5'-0"	5'-0"	0.463	0.463	0.333	64	2.341	0.132	0.178
42"	4'-6"	4'-6"	4'-9"	22	5'-3"	5'-6"	5'-6"	0.560	0.560	0.370	77	2.878	0.180	0.243
48"	5'-4"	5'-4"	5'-3"	26	6'-3"	6'-4"	6'-4"	0.743	0.743	0.407	111	3.623	0.235	0.317
54"	5'-10"	5'-10"	5'-9"	28	6'-7"	6'-10"	6'-10"	0.865	0.865	0.444	126	4.283	0.297	0.401
60"	6'-6"	6'-6"	6'-3"	30	7'-3"	7'-6"	7'-6"	1.042	1.042	0.481	145	5.090	0.367	0.495
66"	7'-1"	7'-1"	6'-9"	32	7'-10"	8'-1"	8'-1"	1.210	1.210	0.518	169	5.917	0.444	0.589

STATE OF NORTH CAROLINA DEPT. OF TRANSPORTATION DIVISION OF HIGHWAYS RALEIGH, N.C.

7-06

ENGLISH STANDARD DRAWING FOR
DROP INLET FRAME AND GRATES
FOR USE WITH STD. DWG.S 840.14 AND 840.15

SHEET 1 OF 1
840.16

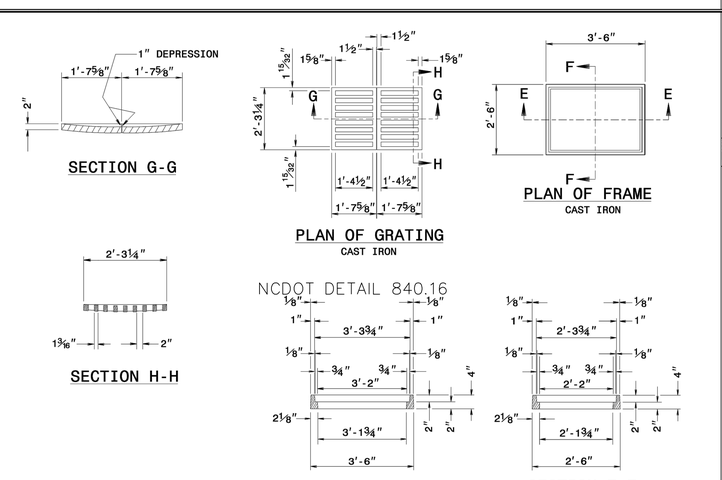

STATE OF NORTH CAROLINA DEPT. OF TRANSPORTATION DIVISION OF HIGHWAYS RALEIGH, N.C.

7-06

ENGLISH STANDARD DRAWING FOR
CONCRETE DROP INLET
12" THRU 30" PIPE

SHEET 1 OF 1
840.14

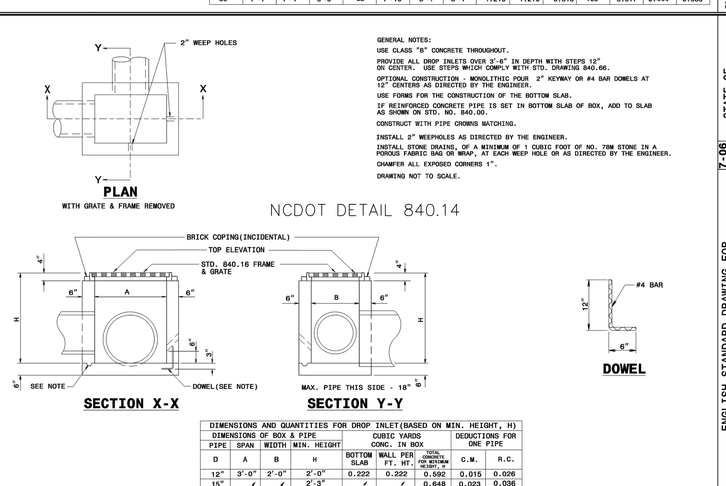
Y
2" WEEP HOLES
X
X
Y
PLAN
WITH GRATE & FRAME REMOVED
GENERAL NOTES:
USE CLASS "B" CONCRETE THROUGHOUT.
PROVIDE ALL DROP INLETS OVER 3'-6" IN DEPTH WITH STEPS 12" ON CENTER. USE STEPS WHICH COMPLY WITH STD. DRAWING 840.66.
OPTIONAL CONSTRUCTION - MONOLITHIC POUR 2" KEYWAY OR #4 BAR DOWELS AT 12" CENTERS AS DIRECTED BY THE ENGINEER.
USE FORMS FOR THE CONSTRUCTION OF THE BOTTOM SLAB.
IF REINFORCED CONCRETE PIPE IS SET IN BOTTOM SLAB OF BOX, ADD TO SLAB AS SHOWN ON STD. NO. 840.00.
CONSTRUCT WITH PIPE CROWNS MATCHING.
INSTALL 2" WEEPHOLES AS DIRECTED BY THE ENGINEER.
INSTALL STONE DRAINS, OF A MINIMUM OF 1 CUBIC FOOT OF NO. 78M STONE IN A POROUS FABRIC BAG OR WRAP, AT EACH WEEP HOLE OR AS DIRECTED BY THE ENGINEER.
CHAMFER ALL EXPOSED CORNERS 1".
DRAWING NOT TO SCALE.
NCDOT DETAIL 840.14
BRICK COPING(INCIDENTAL)
TOP ELEVATION
STD. 840.16 FRAME & GRATE
4"
6"
A
6"
H
6"
3"
6"
SEE NOTE
DOWEL(SEE NOTE)
SECTION X-X
4"
6"
B
6"
H
6"
MAX. PIPE THIS SIDE - 18"
SECTION Y-Y
#4 BAR
12"
6"
DOWEL
DIMENSIONS AND QUANTITIES FOR DROP INLET(BASED ON WIN. HEIGHT, H)

DIMENSIONS OF BOX & PIPE				CUBIC YARDS CONC. IN BOX			DEDUCTIONS FOR ONE PIPE	
PIPE D	SPAN A	WIDTH B	MIN. HEIGHT H	BOTTOM SLAB	WALL PER FT. HT.	TOTAL CONCRETE FOR MINIMUM HEIGHT, H	C.M.	R.C.
12"	3'-0"	2'-0"	2'-0"	0.222	0.222	0.592	0.015	0.026
15"	〃	〃	2'-3"	〃	〃	0.648	0.023	0.036
18"	〃	〃	2'-6"	〃	〃	0.703	0.033	0.049
24"	〃	〃	3'-0"	〃	〃	0.814	0.059	0.085
30"	3'-0"	2'-0"	3'-6"	0.222	0.222	0.925	0.092	0.127

Approved Construction Plan

Name Date

Planning _____

Traffic _____

Fire _____

CITY OF WILMINGTON NORTH CAROLINA
Public Services • Engineering Division
APPROVED STORMWATER MANAGEMENT PLAN
Date: _____ Permit # _____
Signed: _____

For each open utility cut of City streets, a $325 permit shall be required from the City prior to occupancy and/or project acceptance.

NORTH CAROLINA PROFESSIONAL SEAL 031315 ENGINEER GARRY S. PAR 03/20/2015

No.	Revision	Date	By

Designer GSP	Scale 1" = 30'
Drawn By GSP	Date March 2015
License # P-0718	Job No. 2014-0006

BELLE MEADE MIXED-USE

Wilmington New Hanover County North Carolina

STANDARD DETAILS

PREPARED FOR:
BELLE MEADE DEVELOPMENT PARTNERS, LLC
6626-C GORDON ROAD
WILMINGTON, NC 28411
910-799-3006

GSP CONSULTING, PLLC
ENGINEERING
6626 Gordon Road Unit C Wilmington, North Carolina 28411 tel: 910-442-7870 fax: 910-799-6659

Sheet No.
C-8

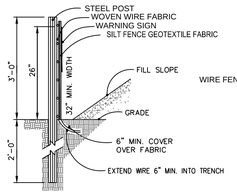

SIDE VIEW

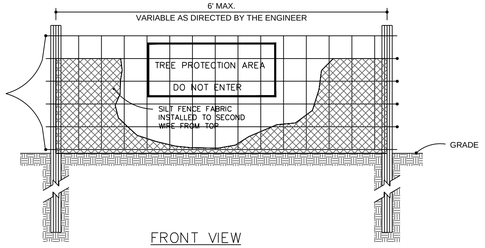

FRONT VIEW

NOTES:
1. SYNTHETIC FILTER FABRIC SHOULD BE OF AT LEAST 95% BY WEIGHT OF POLYOLEFINS OR POLYESTER, WHICH IS CERTIFIED BY THE MANUFACTURER OR SUPPLIER PER ASTM D 6461 AND SHOULD CONTAIN ULTRAVIOLET RAY INHIBITORS AND STABILIZERS PER ASTM D 4355.

2. WIRE FENCE SHALL BE MINIMUM 14 GAUGE WITH A MAXIMUM MESH OPENING OF 6-INCHES.

3. SEE THE NC EROSION AND SEDIMENTATION CONTROL MANUAL FOR OTHER SPECIFICATIONS.

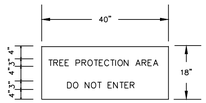

WARNING SIGN DETAIL

NOTE:
WARNING SIGNS TO BE MADE OF DURABLE, WEATHERPROOF MATERIAL. LETTERS TO BE 3" HIGH MINIMUM, CLEARLY LEGIBLE AND SPACED AS DETAILED. SIGNS SHALL BE PLACED AT 50' MAXIMUM INTERVALS. PLACE A SIGN AT EACH END OF LINEAR TREE PROTECTION AND 50' ON CENTER THEREAFTER. FOR TREE PROTECTION AREAS LESS THAN 200' IN PERIMETER, PROVIDE NO LESS THAN ONE SIGN PER PROTECTION AREA. ATTACH SIGNS SECURELY TO FENCE POSTS AND FABRIC. MAINTAIN TREE PROTECTION FENCE THROUGHOUT DURATION OF PROJECT.

*SIGN TO CONTAIN PHRASE "NO MATERIAL STORAGE"
** SIGN TO BE IN ENGLISH & SPANISH

STANDARD TEMPORARY SILT / TREE PROTECTION FENCE

N.T.S.

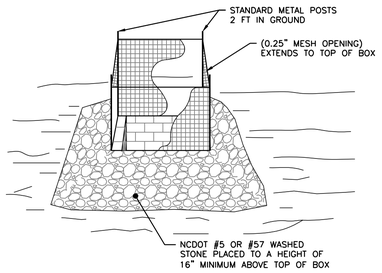

NOTES:
1. DRIVE 5-FOOT STEEL POSTS 2 FEET INTO THE GROUND SURROUNDING THE INLET. SPACE POSTS EVENLY AROUND THE PERIMETER OF THE INLET, A MAXIMUM OF 4 FEET APART.

2. SURROUND THE POSTS WITH WIRE MESH HARDWARE CLOTH. SECURE THE WIRE MESH TO THE STEEL POSTS AT THE TOP, MIDDLE, AND BOTTOM. PLACING A 1-FOOT FLAP OF THE WIRE MESH UNDER THE GRAVEL FOR ANCHORING IS RECOMMENDED.

3. PLACE CLEAN GRAVEL (NC DOT #5 OR #57 STONE) ON A 2:1 SLOPE WITH A MIN HEIGHT OF 16 INCHES AROUND THE WIRE, AND SMOOTH TO AN EVEN GRADE.

STANDARD INLET PROTECTION

NOT TO SCALE

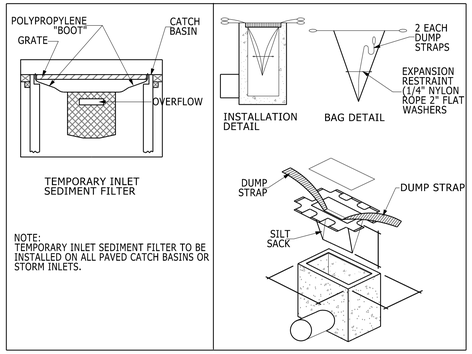

SILT SACK DETAIL

NOT TO SCALE

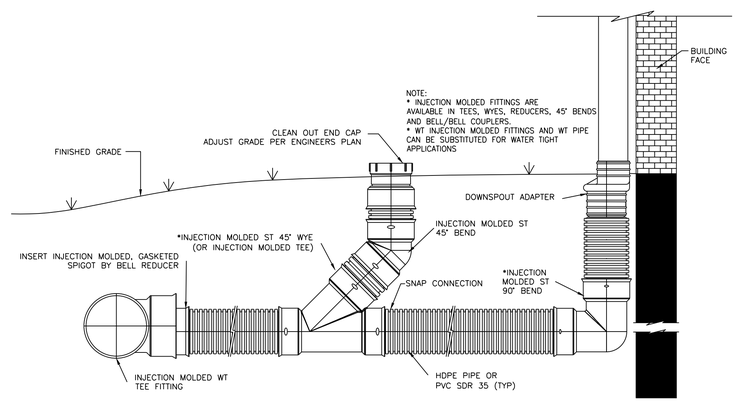

ROOF DRAIN DETAIL WITH CLEANOUT

N.T.S.

NOTES: 1). ALL P.V.C. PIPES ARE TO BE 4" I.D., SCHEDULE 40

2). ALL JOINTS OF THE FLOATATION SECTION SHALL BE SOLVENT WELDED. JOINTS OF SKIMMER SECTION NEED NOT BE WATER-TIGHT.

3). 4" HDPE FLEXIBLE DRAIN PIPE IS TO BE ATTACHED TO THE POND OUTLET STRUCTURE WITH WATER-TIGHT CONNECTIONS.

4). ORIFICE IS TO BE SIZED ACCORDING TO STORAGE VOLUME AND TO SLOWLY RELEASE 1" RUNOFF FOR AT LEAST 24-HOURS.

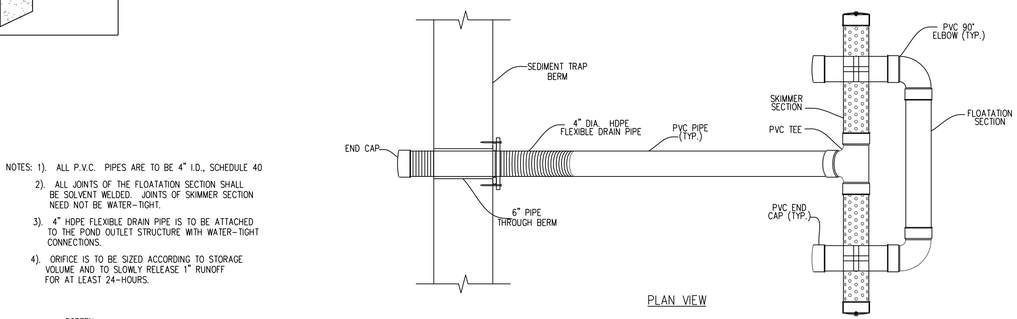

SKIMMER DEWATERING DEVICE

N.T.S.

SEQUENCE OF CONSTRUCTION

LIMITS OF CONSTRUCTION = 12.26 ACRES

1. INSTALL TEMPORARY CONSTRUCTION ENTRANCE AS SHOWN ON EROSION & SEDIMENT CONTROL PLAN.

2. INSTALL PERIMETER CONTROLS (TEMPORARY SILT FENCE, TREE PROTECTION FENCING) AS SHOWN ON THE EROSION & SEDIMENT CONTROL PLAN. THIS STEP NEEDS TO BE COMPLETED PRIOR TO UPSLOPE LAND DISTURBING ACTIVITIES.

3. THE EXISTING WET DETENTION BASIN WILL ACT AS A SEDIMENT BASIN DURING CONSTRUCTION ACTIVITIES.

4. ONCE PERIMETER CONTROLS AND SEDIMENT TRAPPING MEASURES ARE INSTALLED CLEAR AND GRUB SITE WITHIN LIMITS OF DISTURBANCE. THE SEDIMENT BASIN WILL BE PUMPED DOWN BY MECHANICAL MEANS AS NEEDED TO MUCK OUT SEDIMENT WHEN THE SEDIMENT REACHES 50% CAPACITY.

5. UPON BRINGING THE SITE TO ROUGH GRADE, STABILIZE ALL AREAS WITH TEMPORARY VEGETATION IF LEFT UNDISTURBED FOR 15 WORKING DAYS AND ALL SLOPES WITHIN 21 CALENDAR DAYS.

6. ONCE THE PARKING AREAS, SANITARY SEWERS, WATERLINES AND STORM SEWERS ARE IN PLACE, INSTALL INLET PROTECTION AS SHOWN ON THE EROSION & SEDIMENT CONTROL PLAN.

7. UPON BRINGING THE PARKING AREA TO SUBGRADE ELEVATIONS, STABILIZE THE AREAS BY PLACING STONE BASE AS EARLY AS POSSIBLE

8. FOR TEMPORARY VEGETATIVE STABILIZATION OF ALL DENUDED AREAS SEE NOTE REFERENCING THE EROSION CONTROL PROGRAM AND SPECIFICATIONS ON SHEET C-1.

9. AFTER CONSTRUCTION OPERATIONS HAVE ENDED AND ALL DISTURBED AREAS HAVE BEEN STABILIZED, MECHANICAL SEDIMENT CONTROLS SHALL BE REMOVED. SEDIMENT FROM TEMPORARY SEDIMENT TRAPPING DEVICES SHALL BE DISPOSED OF BY SPREADING ON THE SITE OR HAULING AWAY IF NOT SUITABLE FOR FILL. ALL DENUDED AREAS ARE TO BE PERMANENTLY STABILIZED WITH PERMANENT VEGETATION.

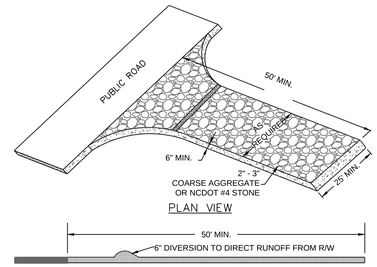

TEMPORARY CONSTRUCTION ENTRANCE

N.T.S.

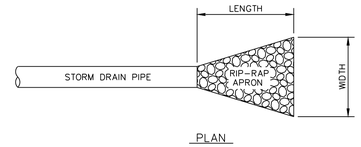

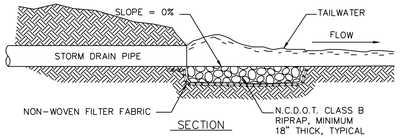

RIPRAP LOCATIONS	LENGTH (FT.)	UPSTREAM WIDTH (FT.)	DOWNSTREAM WIDTH (FT.)
EX. 60" CULVERT	15.0	20.0	30.0

RIP-RAP OUTLET PROTECTION

N.T.S.

Approved Construction Plan

Name Date

Planning _____

Traffic _____

Fire _____

For each open utility cut of City streets, a $325 permit shall be required from the City prior to occupancy and/or project acceptance.

CITY OF WILMINGTON NORTH CAROLINA

Public Services • Engineering Division

APPROVED STORMWATER MANAGEMENT PLAN

Date: _____ Permit # _____

Signed: _____

NORTH CAROLINA PROFESSIONAL SEAL 031315 ENGINEER GARRY S. PAPE 03/26/2015

No.	Revision	Date	By

Designer GSP	Scale 1" = 30'
Drawn By GSP	Date March 2015
License # P-0718	Job No. 2014-0006

BELLE MEADE MIXED-USE

Wilmington New Hanover County North Carolina

STANDARD DETAILS

PREPARED FOR:
BELLE MEADE DEVELOPMENT PARTNERS, LLC
6626-C GORDON ROAD
WILMINGTON, NC 28411
910-799-3006

GSP CONSULTING, PLLC
ENGINEERING
6626 Gordon Road Unit C Wilmington, North Carolina 28411 tel: 910-442-7870 fax: 910-799-6659

Sheet No. C-9

PLANT LIST–OR EQUIVALENTS

KEY	NO.	BOTANICAL NAME	COMMON NAME	MIN. SIZE	TYPE (SHRUB, CANOPY TREE OR UNDERSTORY TREE)	SIZE (LARGE OR SMALL)	SHADING SF GIVEN (TREES ONLY)	PLANTING REMARKS
LI	39	LAGERSTROEMIA INDICA 'NATCHEZ'	SOUTHERN CRAPE MYRTLE	10–12' HT. 2.5" CAL.	UNDERSTORY	SMALL		SPACING AS SHOWN
QV	118	QUERCUS VIRGINIANA	LIVE OAK	8'-10' HT. 2.5" CAL.	CANOPY	LARGE	707	SPACING AS SHOWN
IC	60	ILEX CORNUTA 'CARISSA'	CARISSA HOLLY	3 GAL.	SHRUB			4' O.C.
IV	153	ILEX VOMITORIA 'NANA'	DWARF YAUPON HOLLY	3 GAL.	SHRUB			4' O.C.
LJ	535	LIGUSTRUM JAPONICUM	JAPANESE PRIVET	36"–48"	SHRUB			5' O.C.
NF	148	NANDINA DOMESTICA 'COMPACTA'	FIREPOWER NANDINA	18"–24"	SHRUB			3' O.C.

O.C. – "ON CENTER" CAL. – "CALIPER AT 6" ABOVE GRADE" GAL. – "GALLON CONTAINER"
MIN. PLANTING SIZE: SHADE TREES=2–2.5" CAL. MULTI–STEM= 8–10' SHRUBS= 12"

TREES TO BE RELOCATED

4" DOGWOOD	1
8" DOGWOOD	1
8" OAK	8
9" OAK	4
4" MAG	1
6" MAG	3
7" MAG	1
7" CHERRY	1
8" CHERRY	1

Landscape Calculations:

(Note: All regulated & significant trees have been field located and are labeled.)

	Req'd.	Prov'd.
Matteo Drive Streetyard 1,798 l.f. frontage – 247' driveways =1,551 l.f. X 18 (CB District factor)	27,918 s.f.	28,787 s.f.
@ 1 tree / 600 s.f.	46	46
@ 6 shrubs / 600 s.f.	276	276
Carolina Beach Road Secondary Streetyard 405 l.f. frontage =405 l.f. X 9 (CB District factor)	3,645 s.f.	3,658 s.f.
@ 1 tree / 600 s.f.	6	6
@ 6 shrubs / 600 s.f.	36	36
Sikes Drive Secondary Streetyard 484 l.f. frontage =484 l.f. X 9 (CB District factor)	4,356 s.f.	7,179 s.f.
@ 1 tree / 600 s.f.	7	7
@ 6 shrubs / 600 s.f.	42	42
Parking Area Interior (20% Shading)– 147,227 s.f. X 20% 59 PROPOSED LIVE OAKS AT FULL CREDIT (@707 SF)	29,445 s.f.	41,713 s.f.
Foundation Plantings – 7 APARTMENT BUILDINGS – 2,081 l.f. X 35' facade X 12%	8,740 s.f.	37,100 s.f.
Bufferyards – 1,916 l.f. buffer length @ 1 tree / 30 l.f.	64	64 EXISTING
Overall Development Area – 14.46 ac.± development area x 15 trees/ac.	217	157 PROPOSED 168 EXISTING 325 TOTAL
Signif. Tree removal mitigation –	107 (SEE CHART) 16" MAGNOLIA 31" OAK 35" OAK 27" PINE	
TOTAL TREES REQUIRED	324	

MITIGATION CALCULATIONS

TREE TO BE REMOVED	DIAMETER (in)	# OF TREES REQUIRED
MAGNOLIA	16	10
OAK	31	20
OAK	35	23
PINE	27	54
	TOTAL	107*

*69 EXISTING TREES 2"–5" DBH TO BE RETAINED ON SITE AND SUPPLEMENTED WITH 19 RELOCATED TREES

LANDSCAPE AREAS
- STREET YARD LANDSCAPING
- FOUNDATION LANDSCAPING
- PARKING INTERIOR PLANTING

TREE LEGEND / INVENTORY
- DOGWOOD
- GUM
- OAK
- CREPE MYRTLE
- SYCAMORE
- PINE
- BIRCH
- ELM
- MAGNOLIA
- MAPLE
- POPLAR
- HICKORY

Plant Key

Trees
- LI (SOUTHERN CRAPE MYRTLE)
- QV (LIVE OAK)

Shrubs
- IC (CARISSA HOLLY)
- IV (DWARF YOUPON HOLLY)
- LJ (JAPANESE PRIVET)
- NF (FIREPOWER NANDINA)

NOTES:
1. LIVE OAKS ALONG ROADS TO BE ALIGNED AS CLOSE TO SIDEWALK AS POSSIBLE BUT NOT WITHIN RIGHT OF WAY.
2. SHRUBS ALONG ROADS TO BE INSTALLED 2–3 FEET BEHIND LIVE OAKS.

Approved Construction Plan

	Name	Date
Planning		
Traffic		
Fire		

For each open utility cut of City streets, a $325 permit shall be required from the City prior to occupancy and/or project acceptance.

CITY OF WILMINGTON NORTH CAROLINA
Public Services • Engineering Division
APPROVED STORMWATER MANAGEMENT PLAN
Date:_____ Permit #_____
Signed: _____

GRAPHIC SCALE
50 0 25 50 100
1 inch = 50 ft.

No.	Revision	Date	By

Designer GSP	Scale 1" = 50'
Drawn By GSP	Date March 2015
License # P–0718	Job No. 2014–0006

BELLE MEADE MIXED-USE

Wilmington New Hanover County North Carolina

LANDSCAPE PLAN

PREPARED FOR:
BELLE MEADE DEVELOPMENT PARTNERS, LLC
6626-C GORDON ROAD
WILMINGTON, NC 28411
910-799-3006

GSP CONSULTING, PLLC
ENGINEERING
6626 Gordon Road Unit C Wilmington, North Carolina 28411 tel: 910-442-7870 fax: 910-799-6659

Sheet No. L-1