LESSEE:

T-Mobile

185 FAIRCHILD STREET
CHARLESTON, SC 29492

T-MOBILE SITE ID: 5WI0554
3302 SOUTH COLLEGE ROAD
WILMINGTON, NC 28412
(NEW HANOVER COUNTY)

PLANS PREPARED FOR:

CTG

COMMUNICATIONS TOWER GROUP, LLC
8240 BALLANTYNE COMMONS PARKWAY
CHARLOTTE, NC 28277

MESSIAH LUTHERAN
CTG SITE #: NC-010004

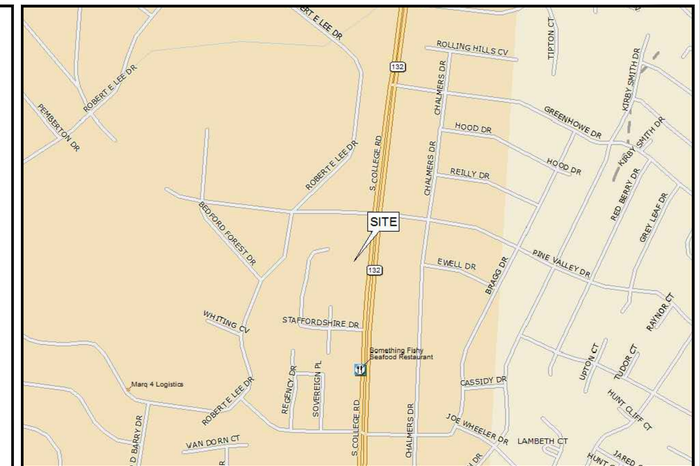

LOCATION MAP

N

LATITUDE	N 34° 11' 9.10"
LONGITUDE	W 77° 53' 28.66"

GROUND ELEV. (AMSL) = 46.9'

TOWER COORDINATES

ALL WORK AND MATERIALS SHALL BE PERFORMED AND INSTALLED IN ACCORDANCE WITH THE CURRENT EDITIONS OF THE FOLLOWING CODES AS ADOPTED BY THE LOCAL GOVERNING AUTHORITES. NOTHING IN THESE PLANS IS TO BE CONSTRUED TO PERMIT WORK NOT CONFORMING TO THE LATEST EDITIONS OF THE FOLLOWING:

1. NORTH CAROLINA BUILDING CODE (2012 EDITION)
2. NORTH CAROLINA CODE COUNCIL
3. ANSI/TIA-222-G-2009
4. 2011 NCEC (NEC 2011 & ADDENDUM)
5. LOCAL BUILDING CODE
6. CITY/COUNTY ORDINANCES

CODE COMPLIANCE

POWER COMPANY:	DUKE ENERGY	TELEPHONE COMPANY:	AT&T
CONTACT:	CUSTOMER SERVICE	CONTACT:	CUSTOMER SERVICE
PHONE:	800-769-3766	PHONE:	(001)331-0500
POLE # NEAR SITE:	8NP80	PHONE # NEAR SITE:	UNKNOWN
		PEDESTAL # NEAR SITE:	F3320

UTILITY INFORMATION

DIRECTIONS BEGINNING FROM CHARLOTTE, NC: TAKE PREFERRED ROUTE TO US-74 E AND FOLLOW FOR APPROXIMATELY 195 MILES. CONTINUE ONTO US-76E. USE THE RIGHT TWO LANES TO TURN RIGHT ONTO OLEANDER DR. AND FOLLOW FOR 2.5 MILES. TURN RIGHT ONTO S COLLEGE ROAD. CONTINUE STRAIGHT FOR APPROXIMATELY 1 MILE. SITE WILL BE LOCATED ON THE RIGHT.

DRIVING DIRECTIONS

T-MOBILE SITE ID:	5WI0554	JURISDICTION:	CITY OF WILMINGTON
CTG SITE #:	NC-010004	AREA OF CONSTRUCTION:	8,144± SQ. FT.
PROJECT DESCRIPTION:	PROPOSED WIRELESS TELECOMM FACILITY	LAND USE:	CHURCH
		CURRENT ZONING:	R-15
		PROPOSED ZONING:	O&I-1/CD
SITE ADDRESS:	3302 SOUTH COLLEGE ROAD WILMINGTON, NC 28412 (NEW HANOVER COUNTY)	PARCEL ID #:	R06606-005-003-000
		TOWER TYPE:	150' STEALTH MONOPOLE

PROJECT INFORMATION

LESSEE:
NAME: T-MOBILE
ADDRESS: 185 FAIRCHILD STREET
CITY, STATE, ZIP: CHARLESTON, SC 29492
CONTACT: ROBERT HILL
PHONE: (843) 216-1210

TOWER OWNER
NAME: CTG, LLC
ADDRESS: 8420 BALLANTYNE COMMONS PARKWAY
CITY, STATE, ZIP: CHARLOTTE, NC 28277
CONTACT: DAVID HARGROVE
PHONE: (919)524-5000

SURVEYOR:
NAME: TOWER ENGINEERING PROFESSIONALS
ADDRESS: 326 TRYON ROAD
CITY, STATE, ZIP: RALEIGH, NC 27603
CONTACT: CLIFFORD S. BYRD, P.L.S.
PHONE: (919) 661-6351

CIVIL ENGINEER:
NAME: TOWER ENGINEERING PROFESSIONALS
ADDRESS: 326 TRYON ROAD
CITY, STATE, ZIP: RALEIGH, NC 27603
CONTACT: KIMBERLY S. MARTIN, P.E.
PHONE: (919) 661-6351

ELECTRICAL ENGINEER:
NAME: TOWER ENGINEERING PROFESSIONALS
ADDRESS: 326 TRYON ROAD
CITY, STATE, ZIP: RALEIGH, NC 27603
CONTACT: MARK S. QUAKENBUSH, P.E.
PHONE: (919) 661-6351

PROPERTY OWNER:
NAME: MESSIAH LUTHERAN CHURCH
ADDRESS: 3302 SOUTH COLLEGE ROAD
CITY, STATE, ZIP: WILMINGTON, NC 28403
CONTACT: FRED SPIKE
PHONE: (910)791-7040

CONTACT INFORMATION

SHEET:	DESCRIPTION:	REV
T-1	TITLE SHEET	3
T-2	APPENDIX B	3
C-1	SITE PLAN & TOWER ELEVATION- STEALTH MONOPOLE	3
C-2	EQUIPMENT PLAN & RF SCHEDULE	3
C-3	GRADING PLAN & LANDSCAPING PLAN	3
C-4	CIVIL DETAILS	3
E-1	ELECTRICAL NOTES & DETAILS	3
E-2	GROUNDING NOTES & DETAILS I	3
E-3	GROUNDING NOTES & DETAILS II	3

SHEET INDEX

1. ALL REFERENCES MADE TO OWNER IN THESE DOCUMENTS SHALL BE CONSIDERED CTG OR IT'S DESIGNATED REPRESENTATIVE.
2. ALL WORK PRESENTED ON THESE DRAWINGS MUST BE COMPLETED BY THE CONTRACTOR UNLESS NOTED OTHERWISE. THE CONTRACTOR MUST HAVE CONSIDERABLE EXPERIENCE IN PERFORMANCE OF WORK SIMILAR TO THAT DESCRIBED HEREIN. BY ACCEPTANCE OF THIS ASSIGNMENT, THE CONTRACTOR IS ATTESTING THAT HE DOES HAVE SUFFICIENT EXPERIENCE AND ABILITY, THAT HE IS KNOWLEDGEABLE OF THE WORK TO BE PERFORMED AND THAT HE IS PROPERLY LICENSED AND PROPERLY REGISTERED TO DO THIS WORK IN THE STATE OF NORTH CAROLINA.
3. THE STRUCTURE SHALL BE DESIGNED IN ACCORDANCE WITH ANSI/TIA-222-G-2-2009. THIS CONFORMS TO THE REQUIREMENTS OF THE NORTH CAROLINA BUILDING CODE, 2012 EDITION.
4. WORK SHALL BE COMPLETED IN ACCORDANCE WITH THE NORTH CAROLINA BUILDING CODE, 2012 EDITION.
5. UNLESS SHOWN OR NOTED OTHERWISE ON THE CONTRACT DRAWINGS, OR IN THE SPECIFICATIONS, THE FOLLOWING NOTES SHALL APPLY TO THE MATERIALS LISTED HEREIN, AND TO THE PROCEDURES TO BE USED ON THIS PROJECT.
6. ALL HARDWARE ASSEMBLY MANUFACTURER'S INSTRUCTIONS SHALL BE FOLLOWED EXACTLY AND SHALL SUPERSEDE ANY CONFLICTING NOTES ENCLOSED HEREIN.
7. IT IS THE CONTRACTOR'S SOLE RESPONSIBILITY TO DETERMINE ERECTION PROCEDURE AND SEQUENCE TO INSURE THE SAFETY OF THE STRUCTURE AND IT'S COMPONENT PARTS DURING ERECTION AND/OR FIELD MODIFICATIONS. THIS INCLUDES, BUT IS NOT LIMITED TO, THE ADDITION OF TEMPORARY BRACING, GUYS OR TIE DOWNS THAT MAY BE NECESSARY. SUCH MATERIAL SHALL BE REMOVED AND SHALL REMAIN THE PROPERTY OF THE CONTRACTOR AFTER THE COMPLETION OF THE PROJECT.
8. ALL DIMENSIONS, ELEVATIONS, AND EXISTING CONDITIONS SHOWN ON THE DRAWINGS SHALL BE FIELD VERIFIED BY THE CONTRACTOR PRIOR TO BEGINNING ANY MATERIALS ORDERING, FABRICATION OR CONSTRUCTION WORK ON THIS PROJECT. CONTRACTOR SHALL NOT SCALE CONTRACT DRAWINGS IN LIEU OF FIELD VERIFICATION. ANY DISCREPANCIES SHALL BE IMMEDIATELY BROUGHT TO THE ATTENTION OF THE OWNER AND THE OWNER'S ENGINEER. THE DISCREPANCIES MUST BE RESOLVED BEFORE THE CONTRACTOR IS TO PROCEED WITH THE WORK. THE CONTRACT DOCUMENTS DO NOT INDICATE THE METHOD OF CONSTRUCTION. THE CONTRACTOR SHALL SUPERVISE AND DIRECT THE WORK AND SHALL BE SOLELY RESPONSIBLE FOR ALL CONSTRUCTION MEANS, METHODS, TECHNIQUES, SEQUENCES, AND PROCEDURES. OBSERVATION VISITS TO THE SITE BY THE OWNER AND/OR THE ENGINEER SHALL NOT INCLUDE INSPECTION OF THE PROTECTIVE MEASURES OR THE PROCEDURES.
9. ALL MATERIALS AND EQUIPMENT FURNISHED SHALL BE NEW AND OF GOOD QUALITY, FREE FROM FAULTS AND DEFECTS AND IN CONFORMANCE WITH THE CONTRACT DOCUMENTS. ANY AND ALL SUBSTITUTIONS MUST BE PROPERLY APPROVED AND AUTHORIZED IN WRITING BY THE OWNER AND ENGINEER PRIOR TO INSTALLATION. THE CONTRACTOR SHALL FURNISH SATISFACTORY EVIDENCE AS TO THE KIND AND QUALITY OF THE MATERIALS AND EQUIPMENT BEING SUBSTITUTED.
10. THE CONTRACTOR SHALL BE RESPONSIBLE FOR INITIATING, MAINTAINING, AND SUPERVISING ALL SAFETY PRECAUTIONS AND PROGRAMS IN CONNECTION WITH THE WORK. THE CONTRACTOR IS RESPONSIBLE FOR INSURING THAT THIS PROJECT AND RELATED WORK COMPLIES WITH ALL APPLICABLE LOCAL, STATE, AND FEDERAL SAFETY CODES AND REGULATIONS GOVERNING THIS WORK.
RENTAL CHARGES, SAFETY, PROTECTION AND MAINTENANCE OF RENTED EQUIPMENT SHALL BE THE CONTRACTOR'S RESPONSIBILITY.
11. ACCESS TO THE PROPOSED WORK SITE MAY BE RESTRICTED. THE CONTRACTOR SHALL COORDINATE INTENDED CONSTRUCTION ACTIVITY, INCLUDING WORK SCHEDULE AND MATERIALS ACCESS, WITH THE LESSEE PROJECT MANAGER.
12. BILL OF MATERIALS AND PART NUMBERS LISTED ON CONSTRUCTION DRAWINGS ARE INTENDED TO AID CONTRACTOR/OWNER. CONTRACTOR/OWNER SHALL VERIFY PARTS AND QUANTITIES WITH MANUFACTURER PRIOR TO BIDDING AND/OR ORDERING MATERIALS.
13. ALL PERMITS THAT MUST BE OBTAINED ARE THE RESPONSIBILITY OF THE CONTRACTOR. THE CONTRACTOR WILL BE RESPONSIBLE FOR ABIDING BY ALL CONDITIONS AND REQUIREMENTS OF THE PERMITS.
14. 24 HOURS PRIOR TO THE BEGINNING OF ANY CONSTRUCTION, THE CONTRACTOR MUST NOTIFY THE APPLICABLE JURISDICTIONAL (STATE, COUNTY OR CITY) ENGINEER.
15. THE CONTRACTOR SHALL REWORK (DRY, SCARIFY, ETC.) ALL MATERIAL NOT SUITABLE FOR SUBGRADE IN ITS PRESENT STATE. AFTER REWORKING, IF THE MATERIAL REMAINS UNSUITABLE, THE CONTRACTOR SHALL UNDERCUT THIS MATERIAL AND REPLACE WITH APPROVED MATERIAL. ALL SUBGRADES SHALL BE PROOFROLLED WITH A FULLY LOADED TANDEM AXLE DUMP TRUCK PRIOR TO PAVING. ANY SOFT MATERIAL SHALL BE REWORKED OR REPLACED.
16. THE CONTRACTOR IS REQUIRED TO MAINTAIN ALL PIPES, DITCHES, AND OTHER DRAINAGE STRUCTURES FREE FROM OBSTRUCTION UNTIL WORK IS ACCEPTED BY THE OWNER. THE CONTRACTOR IS RESPONSIBLE FOR ANY DAMAGES CAUSED BY FAILURE TO MAINTAIN DRAINAGE STRUCTURE IN OPERABLE CONDITION.
17. THE OWNER SHALL HAVE A SET OF APPROVED PLANS AVAILABLE AT THE SITE AT ALL TIMES WHILE WORK IS BEING PERFORMED. A DESIGNATED RESPONSIBLE EMPLOYEE SHALL BE AVAILABLE FOR CONTACT BY GOVERNING AGENCY INSPECTORS.
18. ANY BUILDINGS ON THIS SITE ARE INTENDED TO SHELTER EQUIPMENT WHICH WILL ONLY BE PERIODICALLY MAINTAINED AND ARE NOT INTENDED FOR HUMAN OCCUPANCY.
19. TEMPORARY FACILITIES FOR PROTECTION OF TOOLS AND EQUIPMENT SHALL CONFORM TO LOCAL REGULATIONS AND SHALL BE THE CONTRACTOR'S RESPONSIBILITY.
20. THE CONTRACTOR AND ITS SUBCONTRACTORS SHALL CARRY LIABILITY INSURANCE IN THE AMOUNTS AND FORM IN ACCORDANCE WITH LESSEE SPECIFICATIONS. CERTIFICATES DEMONSTRATING PROOF OF COVERAGE SHALL BE PROVIDED TO LESSEE PRIOR TO THE START OF THE WORK ON THE PROJECT.
21. THE CONTRACTOR SHALL CONTACT ALL APPLICABLE UTILITY SERVICES TO VERIFY LOCATIONS OF EXISTING UTILITIES AND REQUIREMENTS FOR NEW UTILITY CONNECTIONS PRIOR TO EXCAVATING.
22. THE CONTRACTOR SHALL MAINTAIN THE JOB CLEAR OF TRASH AND DEBRIS. ALL WASTE MATERIALS SHALL BE REMOVED FROM THE SITE PRIOR TO SUBSTANTIAL COMPLETION AND PRIOR TO FINAL ACCEPTANCE. THE CONTRACTOR SHALL FURNISH ONE 55 GALLON BARREL, AND TRASH BAGS, AND SHALL REMOVE TRASH, DEBRIS, ETC., ON A DAILY BASIS.
23. THE CONTRACTOR SHALL VISIT THE SITE AND BECOME FAMILIAR WITH ALL CONDITIONS PRIOR TO SUBMITTING HIS PROPOSAL. CONTRACTOR SHALL VERIFY ALL DIMENSIONS AND CONDITIONS SHOWN ON THESE DRAWINGS WITH THOSE AT THE SITE. ANY VARIATION WHICH REQUIRES PHYSICAL CHANGE SHALL BE BROUGHT TO THE ATTENTION OF THE CTG PROJECT ENGINEER FOR FACILITIES/CONSTRUCTION.
24. THE CONTRACTOR SHALL GUARANTEE THE WORK PERFORMED ON THE PROJECT BY THE CONTRACTOR AND ANY OR ALL OF THE SUBCONTRACTORS WHO PERFORMED WORK FOR THE CONTRACTOR ON THIS PROJECT. THE GUARANTEE SHALL BE FOR A FULL YEAR FOLLOWING ISSUANCE OF THE FINAL PAYMENT OF RETAINAGE. ALL MATERIALS AND WORKMANSHIP SHALL BE WARRANTED FOR ONE YEAR FROM ACCEPTANCE DATE.

GENERAL NOTES

PLANS PREPARED FOR:
CTG
8240 BALLANTYNE COMMONS PARKWAY
CHARLOTTE, NC 28277
PHONE: (919) 345-4789

SEAL:
NORTH CAROLINA PROFESSIONAL SEAL 037920 ENGINEER KIMBERLY S. MARTIN
December 18, 2015

REV	DATE	DRAWN BY: MWS
3	12-18-15	CONSTRUCTION
2	11-30-15	PRELIMINARY
1	11-11-15	PRELIMINARY
0	10-02-15	PRELIMINARY
		ISSUED FOR:
		CHECKED BY: SCB

PROJECT INFORMATION:
MESSIAH LUTHERAN
NC-010004
TMO ID: 5WI0554
3302 SOUTH COLLEGE ROAD
WILMINGTON, NS 28412
(NEW HANOVER COUNTY)

PLANS PREPARED BY:
TOWER ENGINEERING PROFESSIONALS
326 TRYON ROAD
RALEIGH, NC 27603-5263
OFFICE: (919) 661-6351
FAX: (919) 661-6350
N.C. LICENSE # C-1794

SHEET TITLE: **TITLE SHEET**
SHEET NUMBER: **T-1**
REVISION: 3
TEP #: 62934

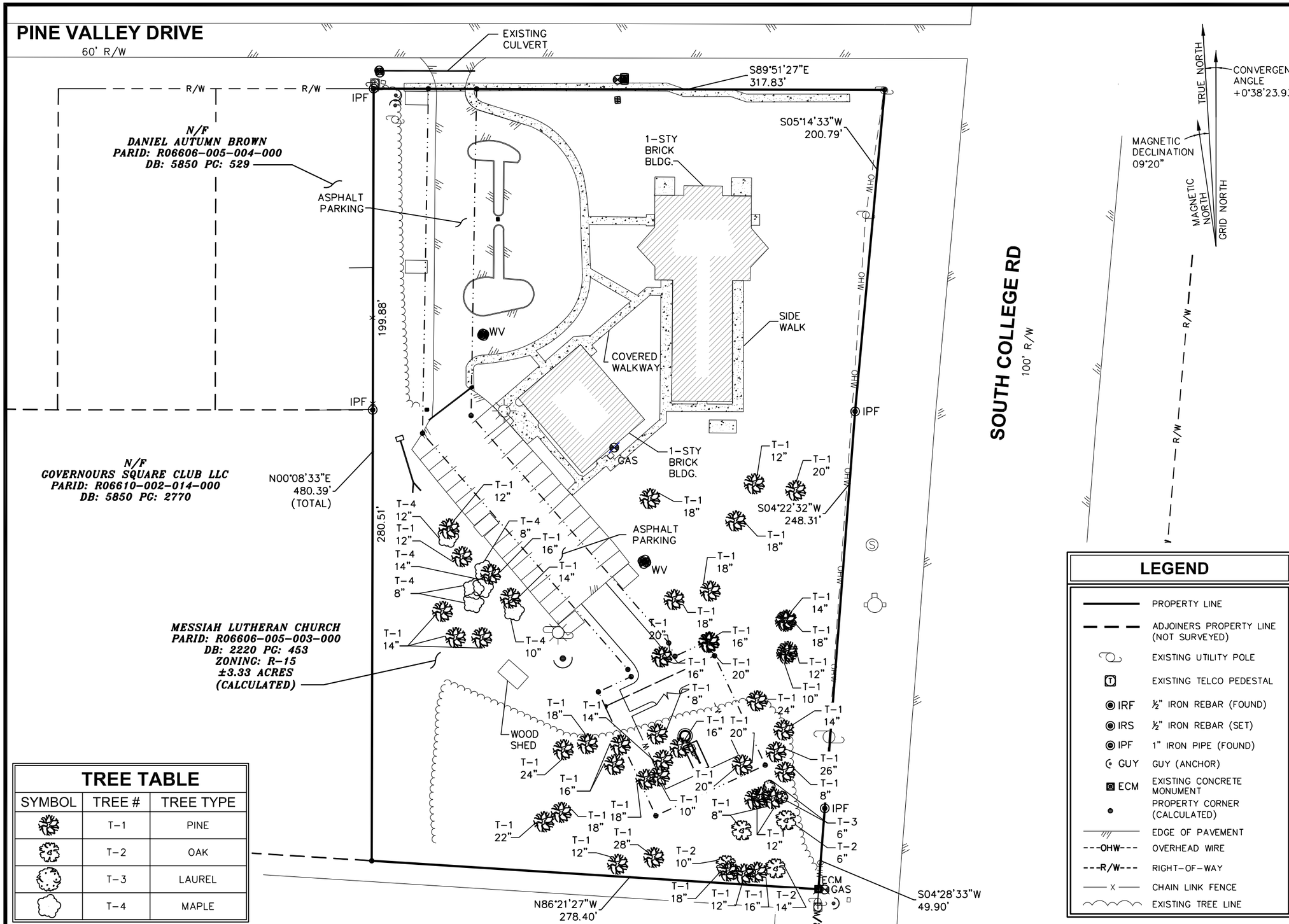

TREE TABLE

SYMBOL	TREE #	TREE TYPE
	T-1	PINE
	T-2	OAK
	T-3	LAUREL
	T-4	MAPLE

LEGEND

- PROPERTY LINE
- ADJOINERS PROPERTY LINE (NOT SURVEYED)
- EXISTING UTILITY POLE
- EXISTING TELCO PEDESTAL
- IRF ½" IRON REBAR (FOUND)
- IRS ½" IRON REBAR (SET)
- IPF 1" IRON PIPE (FOUND)
- GUY GUY (ANCHOR)
- ECM EXISTING CONCRETE MONUMENT
- PROPERTY CORNER (CALCULATED)
- EDGE OF PAVEMENT
- ---OHW--- OVERHEAD WIRE
- ---R/W--- RIGHT-OF-WAY
- —X— CHAIN LINK FENCE
- EXISTING TREE LINE

0 60 120
SCALE IN FEET

TREE SURVEY

SCALE: 1" = 60'

PREPARED FOR:

CTG
8240 BALLANTYNE COMMONS PARKWAY
CHARLOTTE, NC 28277
PHONE: (919) 345-4789

PROJECT INFORMATION:

MESSIAH LUTHERAN
SITE #: NC-010004
3302 SOUTH COLLEGE ROAD
WILMINGTON, NC 28412
(NEW HANOVER COUNTY)

PREPARED BY:

TOWER ENGINEERING PROFESSIONALS
326 TRYON ROAD
RALEIGH, NC 27603-3530
(919) 661-6351
NC LICENSE NO. C-1794

SURVEYOR CERTIFICATE

I, TIMOTHY L. FISH, CERTIFY THIS PLAT WAS DRAWN UNDER MY SUPERVISION FROM AN ACTUAL SURVEY MADE UNDER MY SUPERVISION, (DEED DESCRIPTION RECORDED IN BOOK 2220 AT PAGE 453); THAT ANY BOUNDARIES NOT SURVEYED ARE CLEARLY INDICATED AS BROKEN LINES, AND DRAWN FROM INFORMATION FOUND AS REFERENCED HEREIN; THAT RATIO OF PRECISION OR POSITIONAL ACCURACY IS 1: 10,000 OR GREATER; THAT THIS MAP MEETS THE REQUIREMENTS OF THE STANDARDS OF PRACTICE FOR LAND SURVEYING IN NORTH CAROLINA (21 NCAC 56. 1600.) SIGNED AND SEALED THIS 16TH DAY OF NOVEMBER, 2015.

NORTH CAROLINA PLS # L-4631
TIMOTHY L. FISH, PE, PLS

NORTH CAROLINA PROFESSIONAL SEAL L-4631 LAND SURVEYOR TIMOTHY L. FISH

SHEET TITLE:

TREE SURVEY

DATE: 11/16/2015	REVISION: 0
SHEET #: 1 OF 1	TEP #: 62934

2012 APPENDIX B
BUILDING CODE SUMMARY
FOR ALL COMMERCIAL PROJECTS
(EXCEPT 1 AND 2-FAMILY DWELLINGS AND TOWNHOUSES)
(Reproduce the following data on the building plans sheet 1 or 2)

Name of Project: MESSIAH LUTHERAN
Address: 3302 SOUTH COLLEGE ROAD, WILMINGTON, NC — Zip Code 28412
Proposed Use: CELLULAR COMMUNICATIONS EQUIPMENT
Owner/Authorized Agent: CTG, LLC DAVID HARGROVE — Phone # (704) 405 - 6591 — E-Mail Wes.Webber@crowncastle.com
Owned By: ☐ City/County ☒ Private ☐ State
Code Enforcement Jurisdiction: ☐ City_____ ☐ County_____ ☐ State

LEAD DESIGN PROFESSIONAL: Kimberly S. Martin 037920 919 661-6351 ksmartin@tepgroup.net

DESIGNER	FIRM	NAME	LICENSE #	TELEPHONE #	E-MAIL
Architectural				( )	
Civil	Tower Engineering Professionals	Kimberly S. Martin	037920	(919) 661-6351	ksmartin@tepgroup.net
Electrical	Tower Engineering Professionals	Mark S. Quakenbush	042109	(919) 661-6351	msquakenbush@tepgroup.net
Fire Alarm				( )	
Plumbing				( )	
Mechanical				( )	
Sprinkler-Standpipe				( )	
Structural				( )	
Retaining Walls >5' High				( )	
Other				( )	

2012 EDITION OF NC CODE FOR: ☐ New Construction ☒ Addition ☐ Upfit
EXISTING: ☐ Reconstruction ☐ Alteration ☐ Repair ☐ Renovation
CONSTRUCTED: (date) _____ **ORIGINAL USE(S)** (Ch. 3): _____
RENOVATED: (date) _____ **CURRENT USE(S)** (Ch. 3): _____
PROPOSED USE(S) (Ch. 3): _____

BASIC BUILDING DATA
Construction Type: (check all that apply) ☒ I-A ☐ I-B ☐ II-A ☐ II-B ☐ III-A ☐ III-B ☐ IV ☐ V-A ☐ V-B
Sprinklers: ☒ No ☐ Partial ☐ Yes ☐ NFPA 13 ☐ NFPA 13R ☐ NFPA 13D
Standpipes: ☒ No ☐ Yes Class ☐ I ☐ II ☐ III ☐ Wet ☐ Dry
Fire District: ☐ No ☐ Yes (Primary) **Flood Hazard Area:** ☐ No ☐ Yes
Building Height: (feet) N/A
Gross Building Area:

FLOOR	EXISTING (SQ FT)	NEW (SQ FT)	SUB-TOTAL
6th Floor		N/A	
5th Floor		N/A	
4th Floor		N/A	
3rd Floor		N/A	
2nd Floor		N/A	
Mezzanine		N/A	
X 1st Floor		0 SQ FT	
Basement		N/A	
TOTAL		0 SQ FT	

ALLOWABLE AREA

Occupancy:
Assembly ☐ A-1 ☐ A-2 ☐ A-3 ☐ A-4 ☐ A-5
Business ☐
Educational ☐
Factory ☐ F-1 Moderate ☐ F-2 Low
Hazardous ☐ H-1 Detonate ☐ H-2 Deflagrate ☐ H-3 Combust ☐ H-4 Health ☐ H-5 HPM
Institutional ☐ I-1 ☐ I-2 ☐ I-3 ☐ I-4
I-3 Condition ☐ 1 ☐ 2 ☐ 3 ☐ 4 ☐ 5
Mercantile ☐
Residential ☐ R-1 ☐ R-2 ☐ R-3 ☐ R-4
Storage ☐ S-1 Moderate ☒ S-2 Low ☐ High-piled
☐ Parking Garage ☐ Open ☐ Enclosed ☐ Repair Garage
Utility and Miscellaneous ☐

Accessory Occupancies: N/A
Assembly ☐ A-1 ☐ A-2 ☐ A-3 ☐ A-4 ☐ A-5
Business ☐
Educational ☐
Factory ☐ F-1 Moderate ☐ F-2 Low
Hazardous ☐ H-1 Detonate ☐ H-2 Deflagrate ☐ H-3 Combust ☐ H-4 Health ☐ H-5 HPM
Institutional ☐ I-1 ☐ I-2 ☐ I-3 ☐ I-4
I-3 Condition ☐ 1 ☐ 2 ☐ 3 ☐ 4 ☐ 5
Mercantile ☐
Residential ☐ R-1 ☐ R-2 ☐ R-3 ☐ R-4
Storage ☐ S-1 Moderate ☐ S-2 Low ☐ High-piled
☐ Parking Garage ☐ Open ☐ Enclosed ☐ Repair Garage
Utility and Miscellaneous ☐

Incidental Uses (Table 508.2.5): N/A
☐ Furnace room where any piece of equipment is over 400,000 Btu per hour input
☐ Rooms with boilers where the largest piece of equipment is over 15 psi and 10 horsepower
☐ Refrigerant machine room
☐ Hydrogen cutoff rooms, not classified as Group H
☐ Incinerator rooms
☐ Paint shops, not classified as Group H, located in occupancies other than Group F
☐ Laboratories and vocational shops, not classified as Group H, located in a Group E or I-2 occupancy
☐ Laundry rooms over 100 square feet
☐ Group I-3 cells equipped with padded surfaces
☐ Group I-2 waste and linen collection rooms
☐ Waste and linen collection rooms over 100 square feet
☐ Stationary storage battery systems having a liquid electrolyte capacity of more than 50 gallons, or a lithium-ion capacity of 1,000 pounds used for facility standby power, emergency power or uninterrupted power supplies
☐ Rooms containing fire pumps
☐ Group I-2 storage rooms over 100 square feet
☐ Group I-2 commercial kitchens
☐ Group I-2 laundries equal to or less than 100 square feet
☐ Group I-2 rooms or spaces that contain fuel-fired heating equipment

Special Uses: ☐ 402 ☐ 403 ☐ 404 ☐ 405 ☐ 406 ☐ 407 ☐ 408 ☐ 409 ☐ 410 ☐ 411 ☐ 412 ☐ 413 ☐ 414 ☐ 415 ☐ 416 ☐ 417 ☐ 418 ☐ 419 ☐ 420 ☐ 421 ☐ 422 ☐ 423 ☐ 424 ☐ 425 ☐ 426 ☐ 427 N/A
Special Provisions: ☐ 509.2 ☐ 509.3 ☐ 509.4 ☐ 509.5 ☐ 509.6 ☐ 509.7 ☐ 509.8 ☐ 509.9
Mixed Occupancy: ☒ No ☐ Yes Separation: _____ Hr. Exception: _____
☐ Incidental Use Separation (508.2.5)

This separation is not exempt as a Non-Separated Use (see exceptions).
☐ Non-Separated Use (508.3)
The required type of construction for the building shall be determined by applying the height and area limitations for each of the applicable occupancies to the entire building. The most restrictive type of construction, so determined, shall apply to the entire building.
☐ Separated Use (508.4) – See below for area calculations
For each story, the area of the occupancy shall be such that the sum of the ratios of the actual floor area of each use divided by the allowable floor area for each use shall not exceed 1.

$$\frac{\text{Actual Area of Occupancy A}}{\text{Allowable Area of Occupancy A}} + \frac{\text{Actual Area of Occupancy B}}{\text{Allowable Area of Occupancy B}} \leq 1$$

$$\text{N/A} + \text{N/A} + \ldots\ldots = \text{N/A} \leq 1.00$$

STORY NO.	DESCRIPTION AND USE	(A) BLDG AREA PER STORY (ACTUAL)	(B) TABLE 503[1] AREA	(C) AREA FOR FRONTAGE INCREASE[1]	(D) AREA FOR SPRINKLER INCREASE[2]	(E) ALLOWABLE AREA OR UNLIMITED[3]	(F) MAXIMUM BUILDING AREA[4]

[1] Frontage area increases from Section 506.2 are computed thus:
a. Perimeter which fronts a public way or open space having 20 feet minimum width = _____ (F)
b. Total Building Perimeter = _____ (P)
c. Ratio (F/P) = _____ (F/P)
d. W = Minimum width of public way = _____ (W)
e. Percent of frontage increase $I_f = 100\ [\ F/P - 0.25]\ x\ W/30$ = _____ (%)
[2] The sprinkler increase per Section 506.3 is as follows:
a. Multi-story building I_s = 200 percent
b. Single story building I_s = 300 percent
[3] Unlimited area applicable under conditions of Section 507.
[4] Maximum Building Area = total number of stories in the building x E (506.4).
[5] The maximum area of open parking garages must comply with Table 406.3.5. The maximum area of air traffic control towers must comply with Table 412.1.2.

ALLOWABLE HEIGHT

	ALLOWABLE (TABLE 503)	INCREASE FOR SPRINKLERS	SHOWN ON PLANS	CODE REFERENCE
Type of Construction	Type _____		Type _____	
Building Height in Feet		Feet = H + 20' = _____		
Building Height in Stories		Stories + 1 = _____		

FIRE PROTECTION REQUIREMENTS

BUILDING ELEMENT	FIRE SEPARATION DISTANCE (FEET)	RATING REQ'D	RATING PROVIDED (W/ _____* REDUCTION)	DETAIL # AND SHEET #	DESIGN # FOR RATED ASSEMBLY	DESIGN # FOR RATED PENETRATION	DESIGN # FOR RATED JOINTS
Structural Frame, including columns, girders, trusses							
Bearing Walls							
Exterior							
North							
East							
West							
South							
Interior							
Nonbearing Walls and Partitions							
Exterior walls							
North							
East							
West							
South							
Interior walls and partitions							
Floor Construction Including supporting beams and joists							
Roof Construction Including supporting beams and joists							
Shaft Enclosures - Exit							
Shaft Enclosures - Other							
Corridor Separation							
Occupancy Separation							
Party/Fire Wall Separation							
Smoke Barrier Separation							
Tenant Separation							
Incidental Use Separation							

* Indicate section number permitting reduction

LIFE SAFETY SYSTEM REQUIREMENTS

Emergency Lighting: ☐ No ☐ Yes
Exit Signs: ☐ No ☐ Yes
Fire Alarm: ☐ No ☐ Yes
Smoke Detection Systems: ☐ No ☐ Yes ☐ Partial _____
Panic Hardware: ☐ No ☐ Yes

LIFE SAFETY PLAN REQUIREMENTS

Life Safety Plan Sheet #: _____N/A_____
☐ Fire and/or smoke rated wall locations (Chapter 7)
☐ Assumed and real property line locations

☐ Exterior wall opening area with respect to distance to assumed property lines (705.8)
☐ Existing structures within 30' of the proposed building
☐ Occupancy types for each area as it relates to occupant load calculation (Table 1004.1.1)
☐ Occupant loads for each area
☐ Exit access travel distances (1016)
☐ Common path of travel distances (1014.3 & 1006.3.8)
☐ Dead end lengths (1018.4)
☐ Clear exit widths for each exit door
☐ Maximum calculated occupant load capacity based on egress width (1005.1)
☐ Actual occupant load for each exit door to accommodate based on egress width (1005.1)
☐ A separate schematic plan indicating where fire rated floor/ceiling and/or roof structure is provided for purposes of occupancy separation
☐ Location of doors with panic hardware (1008.1.10)
☐ Location of doors with delayed egress locks and the amount of delay (1008.1.9.7)
☐ Location of doors with electromagnetic egress locks (1008.1.9.8)
☐ Location of doors equipped with hold-open devices
☐ Location of emergency escape windows (1029)
☐ The square footage of each fire area (902)
☐ The square footage of each smoke compartment (407.4)
☐ Note any code exceptions or table notes that may have been utilized regarding the items above

ACCESSIBLE DWELLING UNITS
(SECTION 1107)

TOTAL UNITS	ACCESSIBLE UNITS REQUIRED	ACCESSIBLE UNITS PROVIDED	TYPE A UNITS REQUIRED	TYPE A UNITS PROVIDED	TYPE B UNITS REQUIRED	TYPE B UNITS PROVIDED	TOTAL ACCESSIBLE UNITS PROVIDED

ACCESSIBLE PARKING
(SECTION 1106)

LOT OR PARKING AREA	TOTAL # OF PARKING SPACES REQUIRED	TOTAL # OF PARKING SPACES PROVIDED	# OF ACCESSIBLE SPACES PROVIDED: REGULAR WITH 5' ACCESS AISLE	VAN SPACES WITH 132" ACCESS AISLE	VAN SPACES WITH 8' ACCESS AISLE	TOTAL # ACCESSIBLE PROVIDED
TOTAL						

STRUCTURAL DESIGN

DESIGN LOADS:

Importance Factors: Wind (I_w) 1.00; Snow (I_s) 1.00; Seismic (I_e) 1.00

Live Loads: Roof 20 psf; Mezzanine N/A psf; Floor SEE CABINET INFO FROM MANUFACTURER psf

Ground Snow Load: 80 psf

Wind Load: Basic Wind Speed 90 mph (ASCE-7); Exposure Category C; Wind Base Shears (for MWFRS) Vx = 0.420 kips Vy = 0.319 kips

SEISMIC DESIGN CATEGORY: ☐ A ☐ B ☒ C ☐ D
Provide the following Seismic Design Parameters:
Occupancy Category (Table 1604.5) ☒ I ☐ II ☐ III ☐ IV
Spectral Response Acceleration S_S 40.8 %g S_1 10.8 %g
Site Classification (Table 1613.5.2) ☐ A ☐ B ☐ C ☒ D ☐ E ☐ F
Data Source: ☐ Site Soil Test ☐ Presumptive ☐ Historical Data
Basic structural system (check one) N/A - CABINET
☐ Bearing Walls ☐ Dual w/ Special Moment Frame
☐ Building Frame ☐ Dual w/ Intermediate R/C or Special Steel
☐ Moment Frame ☐ Inverted Pendulum
Seismic base shear: V = 72.45 lbs V_x = 72.45 lbs
Analysis Procedure: ☒ Simplified ☐ Equivalent Lateral Force ☐ Dynamic
Architectural, Mechanical, Components anchored? ☒ Yes ☐ No

LATERAL DESIGN CONTROL: Earthquake ☐ Wind ☒

SOIL BEARING CAPACITIES:
Field Test (provide copy of test report) _____ psf
Presumptive Bearing capacity 1500 psf
Pile size, type, and capacity N/A

SPECIAL INSPECTIONS REQUIRED: ☐ Yes ☒ No

PLUMBING FIXTURE REQUIREMENTS
(TABLE 2902.1)

USE		WATERCLOSETS MALE	WATERCLOSETS FEMALE	URINALS	LAVATORIES MALE	LAVATORIES FEMALE	SHOWERS/ TUBS	DRINKING FOUNTAINS REGULAR	DRINKING FOUNTAINS ACCESSIBLE
SPACE	EXISTING								
	NEW								
	REQUIRED								

SPECIAL APPROVALS

Special approval: (Local Jurisdiction, Department of Insurance, OSC, DPI, DHHS, ICC, etc., describe below)
N/A

ENERGY SUMMARY

ENERGY REQUIREMENTS:
The following data shall be considered minimum and any special attribute required to meet the energy code shall also be provided. Each Designer shall furnish the required portions of the project information for the plan data sheet. If performance method, state the annual energy cost for the standard reference design vs annual energy cost for the proposed design.

Climate Zone: ☐ 3 ☐ 4 ☐ 5

Method of Compliance:
☐ Prescriptive (Energy Code)
☐ Performance (Energy Code)
☐ Prescriptive (ASHRAE 90.1)
☐ Performance (ASHRAE 90.1)

THERMAL ENVELOPE

Roof/ceiling Assembly (each assembly)
Description of assembly:
U-Value of total assembly:
R-Value of insulation:
Skylights in each assembly:
U-Value of skylight:
total square footage of skylights in each assembly:

Exterior Walls (each assembly)
Description of assembly:
U-Value of total assembly:
R-Value of insulation:
Openings (windows or doors with glazing)
U-Value of assembly:
Solar heat gain coefficient:
projection factor:
Door R-Values:

Walls below grade (each assembly)
Description of assembly:
U-Value of total assembly:
R-Value of insulation:

Floors over unconditioned space (each assembly)
Description of assembly:
U-Value of total assembly:
R-Value of insulation:

Floors slab on grade
Description of assembly:
U-Value of total assembly:
R-Value of insulation:
Horizontal/vertical requirement:
slab heated:

MECHANICAL SUMMARY

MECHANICAL SYSTEMS, SERVICE SYSTEMS AND EQUIPMENT

Thermal Zone
winter dry bulb: N/A
summer dry bulb:

Interior design conditions
winter dry bulb: N/A
summer dry bulb:
relative humidity:

Building heating load: N/A

Building cooling load: N/A

Mechanical Spacing Conditioning System
Unitary
description of unit: N/A
heating efficiency: N/A
cooling efficiency:
size category of unit: N/A
Boiler
Size category. If oversized, state reason.: N/A
Chiller
Size category. If oversized, state reason.: N/A

List equipment efficiencies: N/A

ELECTRICAL SUMMARY

ELECTRICAL SYSTEM AND EQUIPMENT

Method of Compliance:
Energy Code: ☒ Prescriptive ☐ Performance
ASHRAE 90.1: ☐ Prescriptive ☐ Performance

Lighting schedule (each fixture type)
lamp type required in fixture FLUORESCENT, HIGH IMPACT, 32W, 2 LBS
number of lamps in fixture 3
ballast type used in the fixture ELECTRONIC
number of ballasts in fixture 1
total wattage per fixture 53
total interior wattage specified vs. allowable per building (or space by space) 159/331
total exterior wattage specified vs. allowable per building

Additional Prescriptive Compliance
☐ 506.2.1 More Efficient Mechanical Equipment
☐ 506.2.2 Reduced Lighting Power Density
☐ 506.2.3 Energy Recovery Ventilation Systems
☐ 506.2.4 Higher Efficiency Service Water Heating
☐ 506.2.5 On-Site Supply of Renewable Energy
☐ 506.2.6 Automatic Daylighting Control Systems

N/A NOT A BUILDING

N/A NOT A BUILDING ONLY

APPENDIX B
SCALE: N.T.S.

PLANS PREPARED FOR:
CTG
8240 BALLANTYNE COMMONS PARKWAY
CHARLOTTE, NC 28273
PHONE: (919) 545-4789

SEAL:
NORTH CAROLINA PROFESSIONAL SEAL 037920 ENGINEER KIMBERLY S. MARTIN

December 18, 2015

REV	DATE	ISSUED FOR:
3	12-18-15	CONSTRUCTION
2	11-30-15	PRELIMINARY
1	11-11-15	PRELIMINARY
0	10-02-15	PRELIMINARY

DRAWN BY: MWS CHECKED BY: SCB

PROJECT INFORMATION:
MESSIAH LUTHERAN
NC-010004
TMO ID: 5WI0554
3302 SOUTH COLLEGE ROAD
WILMINGTON, NS 28412
(NEW HANOVER COUNTY)

PLANS PREPARED BY:
TOWER ENGINEERING PROFESSIONALS
326 TRYON ROAD
RALEIGH, NC 27603-5263
OFFICE: (919) 661-6351
FAX: (919) 661-6350
N.C. LICENSE # C-1794

SHEET TITLE: **APPENDIX B**
SHEET NUMBER: **T-2**
REVISION: 3
TEP # G2934

NOTES:

1. THE BASIS OF THE MERIDIANS AND COORDINATES FOR THIS PLAT IS THE NORTH CAROLINA STATE PLANE COORDINATE SYSTEM, NORTH AMERICAN DATUM 1983 (NCSPCS NAD 83), BASED ON DIFFERENTIAL GPS OBSERVATIONS PERFORMED ON AUGUST 14, 2015.
2. VERTICAL INFORMATION SHOWN, BASED ON THE NORTH AMERICAN VERTICAL DATUM OF NAVD 1988 IN FEET.
3. ALL DISTANCES ARE GROUND UNLESS OTHERWISE NOTED.
4. THE TOWER IS LOCATED IN ZONE "X." AREAS DETERMINED TO BE OUTSIDE THE 0.2% ANNUAL CHANCE FLOODPLAIN ACCORDING TO FEMA COMMUNITY PANEL #3720313600J, DATED APRIL 03, 2006.
5. ALL TREES 8" DBH OR GREATER DEPICTED

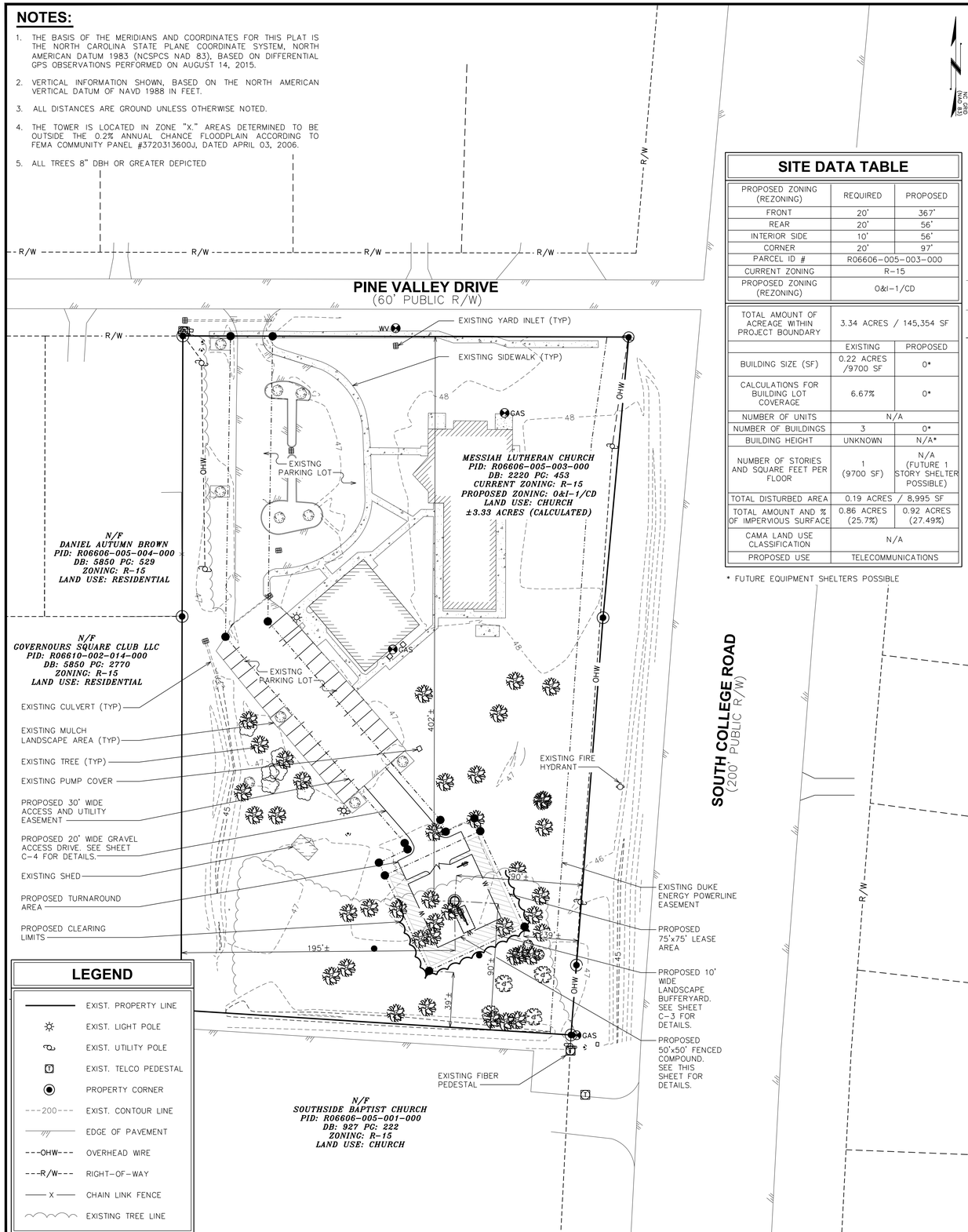

LEGEND

- EXIST. PROPERTY LINE
- EXIST. LIGHT POLE
- EXIST. UTILITY POLE
- EXIST. TELCO PEDESTAL
- PROPERTY CORNER
- 200 EXIST. CONTOUR LINE
- EDGE OF PAVEMENT
- OHW OVERHEAD WIRE
- R/W RIGHT-OF-WAY
- X CHAIN LINK FENCE
- EXISTING TREE LINE

SITE PLAN

SCALE: 1" = 40'

0 40 80 SCALE IN FEET

SITE DATA TABLE

PROPOSED ZONING (REZONING)	REQUIRED	PROPOSED
FRONT	20'	367'
REAR	20'	56'
INTERIOR SIDE	10'	56'
CORNER	20'	97'
PARCEL ID #	R06606-005-003-000	
CURRENT ZONING	R-15	
PROPOSED ZONING (REZONING)	O&I-1/CD	
TOTAL AMOUNT OF ACREAGE WITHIN PROJECT BOUNDARY	3.34 ACRES / 145,354 SF	
	EXISTING	PROPOSED
BUILDING SIZE (SF)	0.22 ACRES /9700 SF	0*
CALCULATIONS FOR BUILDING LOT COVERAGE	6.67%	0*
NUMBER OF UNITS	N/A	
NUMBER OF BUILDINGS	3	0*
BUILDING HEIGHT	UNKNOWN	N/A*
NUMBER OF STORIES AND SQUARE FEET PER FLOOR	1 (9700 SF)	N/A (FUTURE 1 STORY SHELTER POSSIBLE)
TOTAL DISTURBED AREA	0.19 ACRES / 8,995 SF	
TOTAL AMOUNT AND % OF IMPERVIOUS SURFACE	0.86 ACRES (25.7%)	0.92 ACRES (27.49%)
CAMA LAND USE CLASSIFICATION	N/A	
PROPOSED USE	TELECOMMUNICATIONS	

* FUTURE EQUIPMENT SHELTERS POSSIBLE

7C ANTENNA / COAX SCHEDULE

ANT	SECTOR	MANUFACTURER (MODEL #)	TRUE AZM.	MOUNTING HEIGHT	TECH	FIBER SIZE	FIBER LENGTH	MECH D-TILT	ELEC D-TILT	RRU
A1	ALPHA	RFS APX16DWV_16DWV	30°	℄ @ 145'	LTE	(1) HCS 9X18	228'±	0°	2°	(1) RRU S11 B4
					UMTS			0°	2°	(1) RRU S11 B2
B1	BETA	RFS APX16DWV_16DWV	150°	℄ @ 145'	LTE			0°	2°	(1) RRU S11 B4
					UMTS			0°	2°	(1) RRU S11 B2
C1	GAMMA	RFS APX16DWV_16DWV	270°	℄ @ 145'	LTE			0°	2°	(1) RRU S11 B4
					UMTS			0°	2°	(1) RRU S11 B2

INSTALL (1) SQUID

* NOTE – CONTRACTOR TO REFERENCE T-MOBILE ISSUED RFDS AND GIVE PRECEDENCE TO INFORMATON PROVIDED IN RFDS OVER INFORMATION PROVIDED IN THIS TABLE. SEE SHEET C-2 FOR RF CABLE DETAILS.

ANTENNA SCHEDULE

SCALE: N.T.S.

NOTE:

1. CONTRACTOR TO VERIFY INNER PIPE DIAMETER AS WELL AS CANISTER SHROUD DIAMETER
2. PROPOSED RRUS TO BE MOUNTED BELOW ANTENNAS INSIDE CONCEALMENT SHROUD

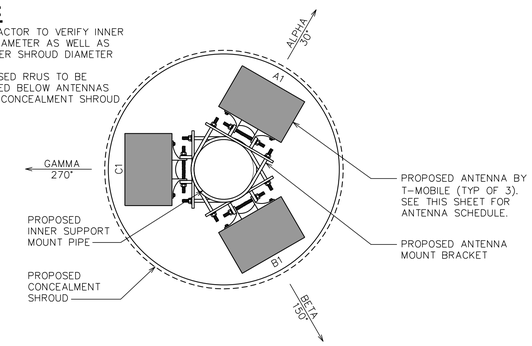

ANTENNA PLAN VIEW

SCALE: 1" = 1'-0"

0 1 2 SCALE IN FEET

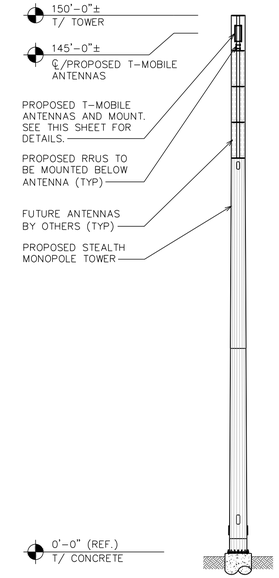

TOWER ELEVATION

SCALE: 1" = 20'

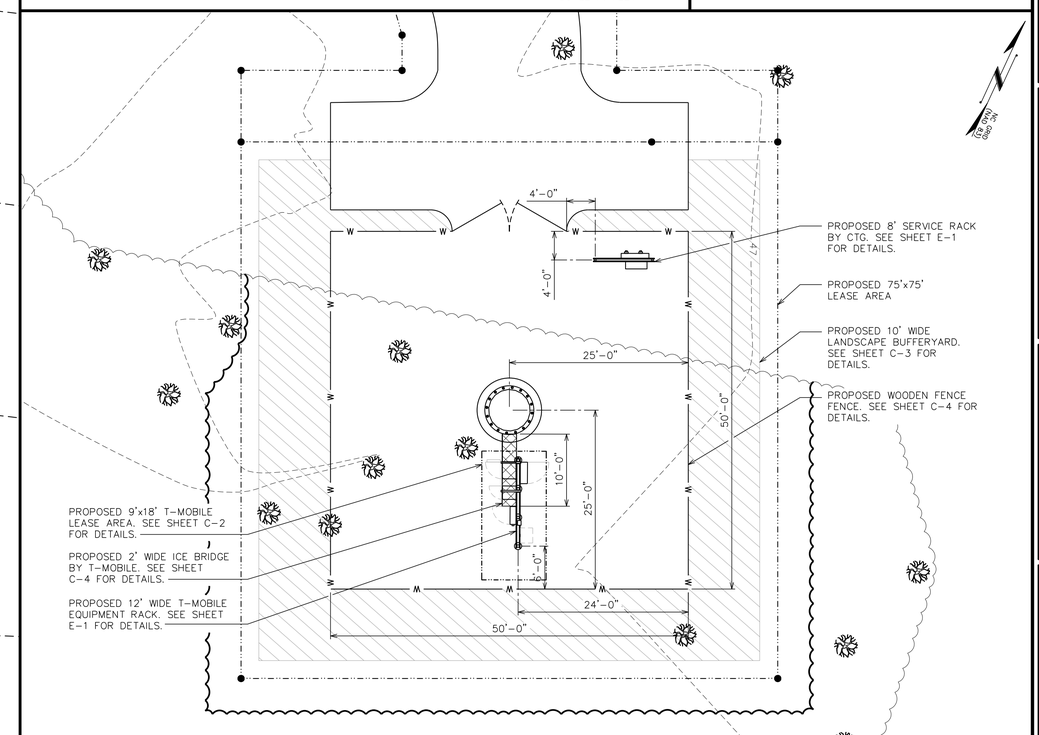

COMPOUND DETAIL

SCALE: 1" = 10'

0 10 20 SCALE IN FEET

PLANS PREPARED FOR:
CTG
8240 BALLANTYNE COMMONS PARKWAY
CHARLOTTE, NC 28277
PHONE: (919) 345-4789

SEAL:

NORTH CAROLINA PROFESSIONAL SEAL 037920 ENGINEER KIMBERLY S. MARTIN

December 18, 2015

REV	DATE	
3	12-18-15	CONSTRUCTION
2	11-30-15	PRELIMINARY
1	11-11-15	PRELIMINARY
0	10-02-15	PRELIMINARY

ISSUED FOR:

DRAWN BY: MWS

CHECKED BY: SCB

PROJECT INFORMATION:

MESSIAH LUTHERAN
NC-010004
TMO ID: 5WI0554

3302 SOUTH COLLEGE ROAD
WILMINGTON, NS 28412
(NEW HANOVER COUNTY)

PLANS PREPARED BY:
TOWER ENGINEERING PROFESSIONALS
326 TRYON ROAD
RALEIGH, NC 27603-5263
OFFICE: (919) 661-6351
FAX: (919) 661-6350
N.C. LICENSE # C-1794

SHEET TITLE: **SITE PLAN & TOWER ELEVATION**

SHEET NUMBER: **C-1**

REVISION: 3

TEP #: 62934

NSD RFDS Preliminary v3.0

Site ID	5WI0554G	Latitude	34.195778
Site Name	SWI0554G	Longitude	-77.851361
Address		Site Type	Raw Land
Market	Carolinas	Structure	Monopole
		Landlord	Messiah Lutheran Church

Configuration: **7C**

Approvals	
Market RF	Pathik Tripathi
Market Development	

RFDS Revision	3	Date 08/05/2015
RFDS Final	7C	
Work Order #		NOC# (888) 218-6664

Site Information

Existing Configuration: 1 | 2 | 3 | 4

Proposed Configuration:

	1	2	3	4
Cabinet #				
Technology	UMTS/LTE			
Cabinet type	6601			
Band				
DUW30	1			
DUL20	1			
DUG20				
DUS41				
RBS6601	2			
dTRU/TRX				
RRUS11 B2				
RRUS11 B4	3			
RRUS11 B5	3			

Scope of Work

- [ ] Relocate cabinet
- [x] Add cabinet
- [ ] Remove cabinet
- [ ] Remove rad center
- [ ] Make cabinet dark

ALPHA - Scope of Work

- [x] Add new mount
- [ ] Relocate antenna
- [ ] Add antenna
- [x] Swap antenna
- [ ] Remove antenna
- [ ] Add TMA
- [ ] Swap TMA
- [ ] Remove TMA
- [x] Add RRU
- [ ] Swap existing RRU
- [ ] Remove RRU
- [ ] Consolidate coax cables
- [ ] Add coax cables
- [x] Add fiber cables
- [ ] Add hybrid combiner
- [ ] Add fiber combiner

Install 1x APX16DWV antenna
Install Two Fiber Optic each one from Squid to UMTS 1900 RRUS11B2 and another to LTE 2100 RRUS11 B4
Install one RRUS11 B2 at U1900 & one RRUS11B4 at L2100 with RF jumpers
Install 2 separate ASSG .One for UMTS 1900 RRUS11B2 and other for LTE 2100 RRUS11 B4

BETA - Scope of Work

- [x] Add new mount
- [ ] Relocate antenna
- [ ] Add antenna
- [x] Swap antenna
- [ ] Remove antenna
- [ ] Add TMA
- [ ] Swap TMA
- [ ] Remove TMA
- [x] Add RRU
- [ ] Swap existing RRU
- [ ] Remove RRU
- [ ] Consolidate coax cables
- [ ] Add coax cables
- [x] Add fiber cables
- [ ] Add hybrid combiner
- [ ] Add fiber combiner

Install 1x APX16DWV antenna
Install Two Fiber Optic each one from Squid to UMTS 1900 RRUS11B2 and another to LTE 2100 RRUS11 B4
Install one RRUS11 B2 at U1900 & one RRUS11B4 at L2100 with RF jumpers
Install 2 separate ASSG .One for UMTS 1900 RRUS11B2 and other for LTE 2100 RRUS11 B4

GAMMA - Scope of Work

- [x] Add new mount
- [ ] Relocate antenna
- [x] Add antenna
- [ ] Swap antenna
- [ ] Remove antenna
- [ ] Add TMA
- [ ] Swap TMA
- [ ] Remove TMA
- [x] Add RRU
- [ ] Swap existing RRU
- [ ] Remove RRU
- [ ] Consolidate coax cables
- [ ] Add coax cables
- [x] Add fiber cables
- [ ] Add hybrid combiner
- [ ] Add fiber combiner

Install 1x APX16DWV antenna
Install Two Fiber Optic each one from Squid to UMTS 1900 RRUS11B2 and another to LTE 2100 RRUS11 B4
Install one RRUS11 B2 at U1900 & one RRUS11B4 at L2100 with RF jumpers
Install 2 separate ASSG .One for UMTS 1900 RRUS11B2 and other for LTE 2100 RRUS11 B4

DELTA - Scope of Work

- [ ] Add new mount
- [ ] Relocate antenna
- [ ] Add antenna
- [ ] Swap antenna
- [ ] Remove antenna
- [ ] Add TMA
- [ ] Swap TMA
- [ ] Remove TMA
- [ ] Add RRU
- [ ] Swap existing RRU
- [ ] Remove RRU
- [ ] Consolidate coax cables
- [ ] Add coax cables
- [ ] Add fiber cables
- [ ] Add hybrid combiner
- [ ] Add fiber combiner

1/3

NSD RFDS Preliminary v3.0

Site ID	5WI0554G	Latitude	34.195778
Site Name	SWI0554G	Longitude	-77.851361
Address		Site Type	Raw Land
Market	Carolinas	Structure	Monopole
		Landlord	Messiah Lutheran Church

Configuration: **7C**

Approvals	
Market RF	Pathik Tripathi
Market Development	

RFDS Revision	3	Date 08/05/2015
RFDS Final	7C	

ALPHA (view from behind)

Existing Configuration | Mount | Proposed Configuration

Technology	LTE			UMTS			
Band	L21			B2			
Active/Passive	P			P			
Ant. Type	Quad pole						
Ant. Model	APX16DWV_16DWV						
Ant. Vendor	RFS						
Ant. Height	140						
Azimuth	170						
RET deployed	Yes			Yes			
E-Tilt	2			2			
M-Tilt	0			0			
TMA #							
Splitter #							
900_#	1			1			
RRU Type	S11 B4			S11 B2			
Used Coax #							
Coax Type							
Coax Length (ft)							
Fiber (CPRI) #	2			2			
Splitter #							
Combiner #							
Combiner Type							

- [x] Add new mount
- [ ] Relocate antenna
- [x] Add antenna
- [ ] Swap antenna
- [ ] Remove antenna
- [ ] Add TMA
- [ ] Swap TMA
- [ ] Remove TMA
- [x] Add RRU
- [ ] Swap existing RRU
- [ ] Remove RRU
- [ ] Consolidate coax cables
- [ ] Add coax cables
- [x] Add fiber cables
- [ ] Add hybrid combiner
- [ ] Add fiber combiner

Scope of work
Install 1x APX16DWV antenna
Install Two Fiber Optic each one from Squid to UMTS 1900 RRUS11B2 and another to LTE 2100 RRUS11 B4
Install one RRUS11 B2 at U1900 & one RRUS11B4 at L2100 with RF jumpers
Install 2 separate ASSG .One for UMTS 1900 RRUS11B2 and other for LTE 2100 RRUS11 B4

BETA (view from behind)

Existing Configuration | Proposed Configuration

Technology	LTE			UMTS			
Band	L21			B2			
Active/Passive	P			P			
Ant. Type	Quad pole						
Ant. Model	APX16DWV_16DWV						
Ant. Vendor	RFS						
Ant. Height	140						
Azimuth	170						
RET deployed	Yes			Yes			
E-Tilt	2			2			
M-Tilt	0			0			
TMA #							
Splitter #							
900_#	1			1			
RRU Type	S11 B4			S11 B2			
Used Coax #							
Coax Type							
Coax Length (ft)							
Fiber (CPRI) #	2			2			
Splitter #							
Combiner #							
Combiner Type							

- [x] Add new mount
- [ ] Relocate antenna
- [x] Add antenna
- [ ] Swap antenna
- [ ] Remove antenna
- [ ] Add TMA
- [ ] Swap TMA
- [ ] Remove TMA
- [x] Add RRU
- [ ] Swap existing RRU
- [ ] Remove RRU
- [ ] Consolidate coax cables
- [ ] Add coax cables
- [x] Add fiber cables
- [ ] Add hybrid combiner
- [ ] Add fiber combiner

Scope of work
Install 1x APX16DWV antenna
Install Two Fiber Optic each one from Squid to UMTS 1900 RRUS11B2 and another to LTE 2100 RRUS11 B4
Install one RRUS11 B2 at U1900 & one RRUS11B4 at L2100 with RF jumpers
Install 2 separate ASSG .One for UMTS 1900 RRUS11B2 and other for LTE 2100 RRUS11 B4

2/3

NSD RFDS Preliminary v3.0

Site ID	5WI0554G	Latitude	34.195778
Site Name	SWI0554G	Longitude	-77.851361
Address		Site Type	Raw Land
Market	Carolinas	Structure	Monopole
		Landlord	Messiah Lutheran Church

Configuration: **7C**

Approvals	
Market RF	Pathik Tripathi
Market Development	

RFDS Revision	3	Date 08/05/2015
RFDS Final	7C	

GAMMA (view from behind)

Existing Configuration | Proposed Configuration

Technology	LTE			UMTS			
Band	L21			B2			
Active/Passive	P			P			
Ant. Type	Quad pole						
Ant. Model	APX16DWV_16DWV						
Ant. Vendor	RFS						
Ant. Height	140						
Azimuth	270						
RET deployed	Yes			Yes			
E-Tilt	2			2			
M-Tilt	0			0			
TMA #							
Splitter #							
900_#	1			1			
RRU Type	S11 B4			S11 B2			
Used Coax #							
Coax Type							
Coax Length (ft)							
Fiber (CPRI) #	2			2			
Splitter #							
Combiner #							
Combiner Type							

- [x] Add new mount
- [ ] Relocate antenna
- [x] Add antenna
- [ ] Swap antenna
- [ ] Remove antenna
- [ ] Add TMA
- [ ] Swap TMA
- [ ] Remove TMA
- [x] Add RRU
- [ ] Swap existing RRU
- [ ] Remove RRU
- [ ] Consolidate coax cables
- [ ] Add coax cables
- [x] Add fiber cables
- [ ] Add hybrid combiner
- [ ] Add fiber combiner

Scope of work
Install 1x APX16DWV antenna
Install Two Fiber Optic each one from Squid to UMTS 1900 RRUS11B2 and another to LTE 2100 RRUS11 B4
Install one RRUS11 B2 at U1900 & one RRUS11B4 at L2100 with RF jumpers
Install 2 separate ASSG .One for UMTS 1900 RRUS11B2 and other for LTE 2100 RRUS11 B4

DELTA (view from behind)

Existing Configuration | Proposed Configuration

Technology							
Band							
Active/Passive							
Ant. Type							
Ant. Model							
Ant. Vendor							
Ant. Height							
Azimuth							
RET deployed							
E-Tilt							
M-Tilt							
TMA #							
Splitter #							
900_#							
RRU Type							
Used Coax #							
Coax Type							
Coax Length (ft)							
Fiber (CPRI) #							
Splitter #							
Combiner #							
Combiner Type							

- [ ] Add new mount
- [ ] Relocate antenna
- [ ] Add antenna
- [ ] Swap antenna
- [ ] Remove antenna
- [ ] Add TMA
- [ ] Swap TMA
- [ ] Remove TMA
- [ ] Add RRU
- [ ] Swap existing RRU
- [ ] Remove RRU
- [ ] Consolidate coax cables
- [ ] Add coax cables
- [ ] Add fiber cables
- [ ] Add hybrid combiner
- [ ] Add fiber combiner

Scope of work

3/3

RF CABLE DETAILS

SCALE: N.T.S.

NOTES:

1. CONTRACTOR TO STUB-UP REQUIRED CONDUITS PRIOR TO POURING CONCRETE PER EQUIPMENT CABINET INSTRUCTIONS.
2. FOR COMPLETE EQUIPMENT ROUTING DETAILS SEE SHEET E-1.

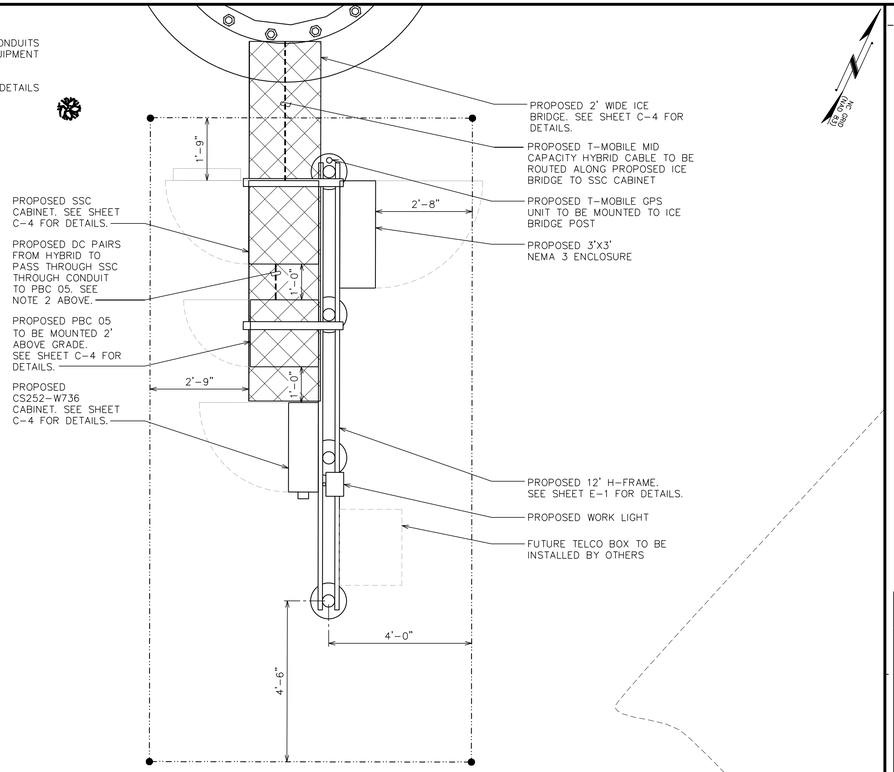

EQUIPMENT LAYOUT PLAN

SCALE: ½" = 1'-0"

0 2 4
SCALE IN FEET

MITIGATION NOTES:

1. TREES DESIGNATED AS TO BE REMOVED ARE BOLDED
2. TOTAL OF 122" DBH OF PINE TREES BEING REMOVED. MITIGATION PROVIDED USING METHOD (E) FOR LONG-LEAF PINE PLUGS FROM ARTICLE 8, SECTION 18-460 OF THE CITY OF WILMINGTON LAND DEVELOPMENT CODE. SEE LANDSCAPING PLAN SHEET C-3 FOR DETAILS.
3. NO SIGNIFICANT TREES ARE BEING DISTURBED

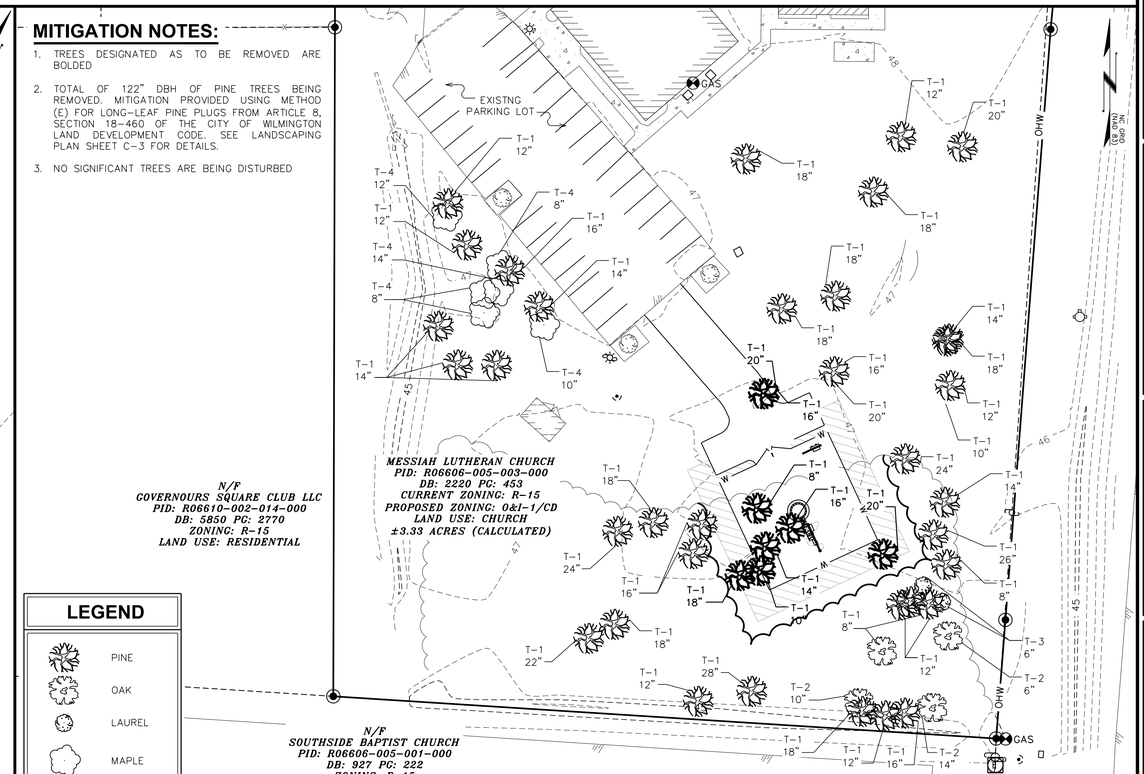

LEGEND

- PINE
- OAK
- LAUREL
- MAPLE

TREE SURVEY

SCALE: 1" = 30'

0 30 60
SCALE IN FEET

PLANS PREPARED FOR:
CTG
8240 BALLANTYNE COMMONS PARKWAY
CHARLOTTE, NC 28273
PHONE: (919) 545-4789

SEAL:

NORTH CAROLINA PROFESSIONAL SEAL 037920 ENGINEER KIMBERLY S. MARTIN

December 18, 2015

REV	DATE	
3	12-18-15	CONSTRUCTION
2	11-30-15	PRELIMINARY
1	11-11-15	PRELIMINARY
0	10-02-15	PRELIMINARY

DRAWN BY: MWS
ISSUED FOR:
CHECKED BY: SCB

PROJECT INFORMATION:
MESSIAH LUTHERAN
NC-010004
TMO ID: 5WI0554
3302 SOUTH COLLEGE ROAD
WILMINGTON, NS 28412
(NEW HANOVER COUNTY)

PLANS PREPARED BY:
TOWER ENGINEERING PROFESSIONALS
326 TRYON ROAD
RALEIGH, NC 27603-5263
OFFICE: (919) 661-6351
FAX: (919) 661-6350
N.C. LICENSE # C-1794

SHEET TITLE:
EQUIPMENT LAYOUT PLAN & RF CABLE DETAILS

SHEET NUMBER: **C-2**

REVISION: 3

TEP #: 62934

NOTES:

1. FILTER FABRIC SHALL CONFORM TO THE REQUIREMENTS LISTED IN ASTM D 6461.
2. ENDS OF INDIVIDUAL FILTER FABRIC SHALL BE SECURELY FASTENED AT A SUPPORT POST WITH 4 FEET MINIMUM OVERLAP TO THE NEXT POST
3. PLACE 12 INCHES OF FABRIC ALONG THE BOTTOM AND SIDE OF THE TRENCH.
4. INSPECT SEDIMENT FENCE(S) AT LEAST ONCE A WEEK AND AFTER EACH RAINFALL.
5. REMOVE SEDIMENT DEPOSITS AS NECESSARY TO PROVIDE ADEQUATE STORAGE VOLUME FOR THE NEXT RAIN AND TO REDUCE PRESSURE ON THE FENCE.
6. AFTER CONSTRUCTION IS COMPLETE, THE CONTRACTOR SHALL REMOVE ALL FENCING MATERIALS AND UNSTABLE SEDIMENT DEPOSITS, BRING THE AREA TO GRADE AND PROPERLY STABILIZE THE SITE.

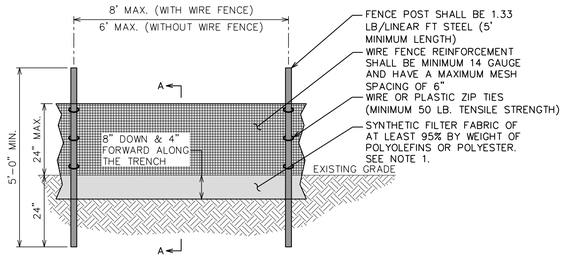

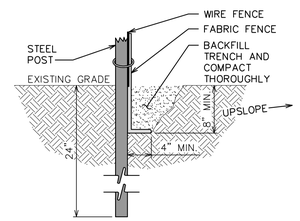

SECTION A-A

SILT FENCE DETAILS

SCALE: N.T.S.

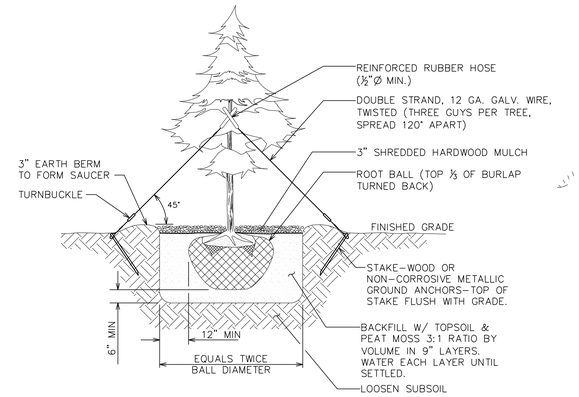

LANDSCAPING DETAILS

SCALE: N.T.S.

EROSION NOTE:

SILT FENCE TO CONTINUE ALONG ACCESS ROAD AS NEEDED

GRADING NOTE:

CONTRACTOR SHALL ENSURE POSITIVE DRAINAGE ACROSS COMPOUND.

LEGEND

SILT FENCE	-o-o-

SITE DATA TABLE

TOTAL PARCEL AREA:	3.34 ACRES± / 145,354 SF
EXISTING IMPERVIOUS:	0.86 ACRES± / 37,461 SF (25.7%)
PROPOSED IMPERVIOUS:	0.06 ACRES± / 25,000 SF (1.72%)
TOTAL IMPERVIOUS:	0.92 ACRES± / 39,961 SF (27.49%)
PROPOSED ACCESS DRIVE DISTURBED AREA:	0.06 ACRES± / 2,519 SF (1.73%)
PROPOSED COMPOUND DISTURBED AREA:	0.15 ACRES± / 6,476 SF (4.46%)
TOTAL PROPOSED DISTURBED AREA:	0.19 ACRES± / 8,995 SF (6.19%)

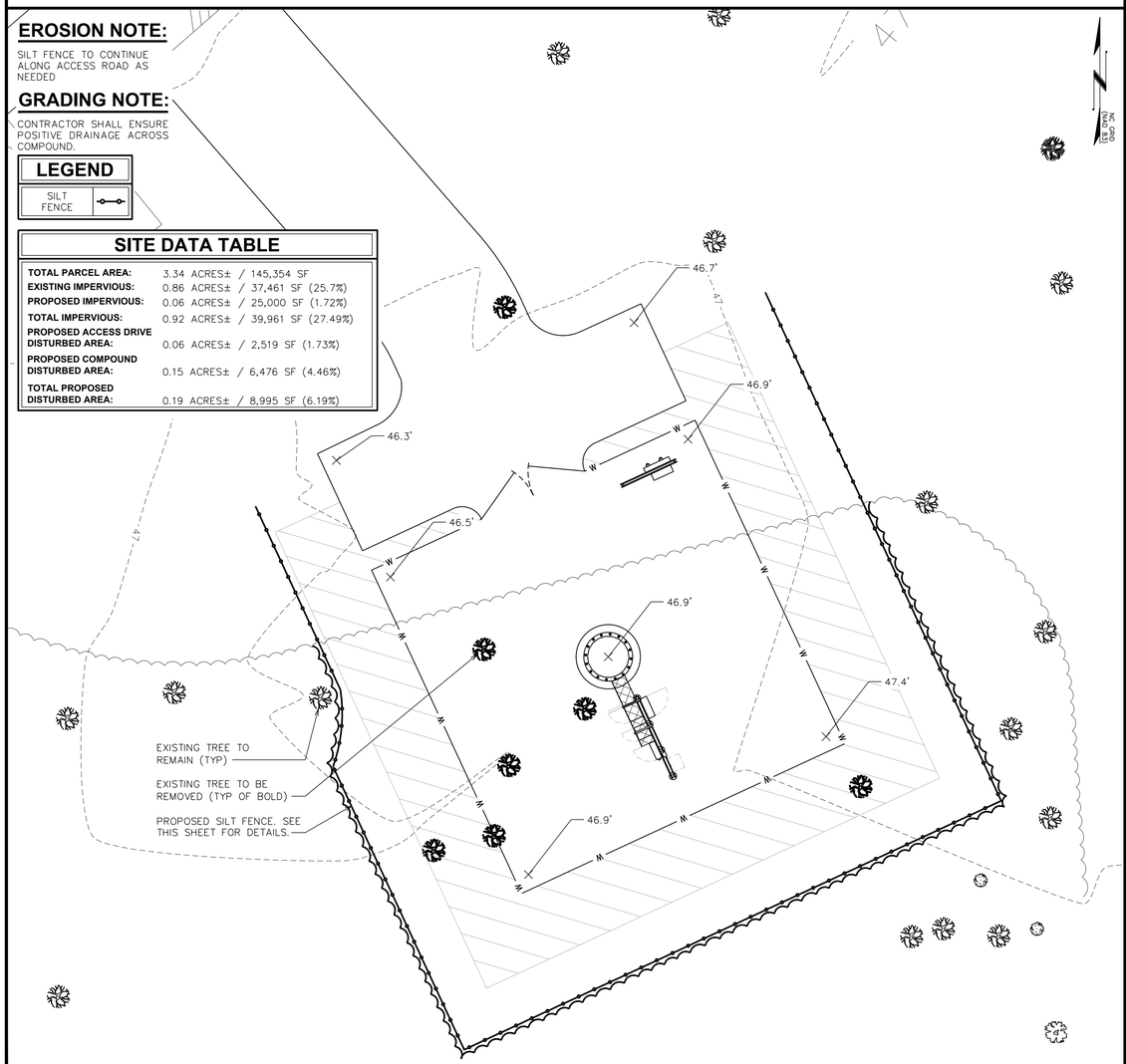

GRADING PLAN

SCALE: 1" = 10'

0 10 20
SCALE IN FEET

PLANTING SCHEDULE

ITEM	QTY.	BOTANICAL NAME	COMMON NAME	HEIGHT @ PLANTING	HEIGHT @ 2 YRS.	SPREAD/ CALIPER	SPACING	REMARKS
SHRUB								
1	13	*(THUJA)*	GREEN GIANT	N/A	N/A	2 1/2"	15' (MIN)	SHOWN AS
2	41	*(PINUS PALUSTRIS)*	LONGLEAF PINE	EVERGREEN PLUG	N/A	N/A	10' (MIN)	SHOWN AS
MULCH								
3	–	-	MULCH	–	–	–	–	APPLY 3"-4" DEEP FROM THE TRUNKLINE TO THE DRIPLINE. FOR GROUND COVER – APPLY 1"-2" DEEP

LANDSCAPE NOTES:

1. TOPSOIL TO BE PROVIDED BY SITE CONTRACTOR IN ROUGH GRADE TO WITHIN 1" OF FINISH GRADE.
2. EACH PLANT TO BE IN THE TOP OF ITS CLASS AFTER SHEARING AND PRUNING.
3. EACH PLANT TO BE FREE FROM DISEASE, INSECT INFESTATION, AND MECHANICAL INJURIES, AND IN ALL RESPECTS BE SUITABLE FOR FIELD PLANTING.
4. ALL PLANTS TO BE FULLY GUARANTEED (LABOR AND MATERIALS) FOR A PERIOD OF NOT LESS THAN ONE (1) YEAR FROM DATE OF INSTALLATION.
5. ALL PLANTS SHALL CONFORM TO THE AMERICAN STANDARD FOR NURSERY STOCK, ANSI Z60.1-1973 IN REGARD TO SIZING, GROWING, AND B&B SPECIFICATIONS.
6. THE CONTRACTOR SHALL PROTECT ALL EXISTING TREES AND SHRUBS WITHIN THE CONSTRUCTION AREA IDENTIFIED AS "TO REMAIN" FROM DAMAGE BY EQUIPMENT AND CONSTRUCTION ACTIVITIES.
7. SEE MITIGATION NOTES ON TREE SURVEY SHEET C-2
8. GREEN GIANTS PROVIDED TO MEET REQUIREMENTS OF ARTICLE 6 SECTION 18-259 (F) OF THE CITY OF WILMINGTON LAND DEVELOPMENT CODE.

MITIGATION CALCULATIONS

TOTAL DBH REMOVED:	122"
TREE TYPE:	LONGLEAF PINE
% MITIGATION FROM TABLE IV:	100%
SEEDLINGS REQUIRED	40.7

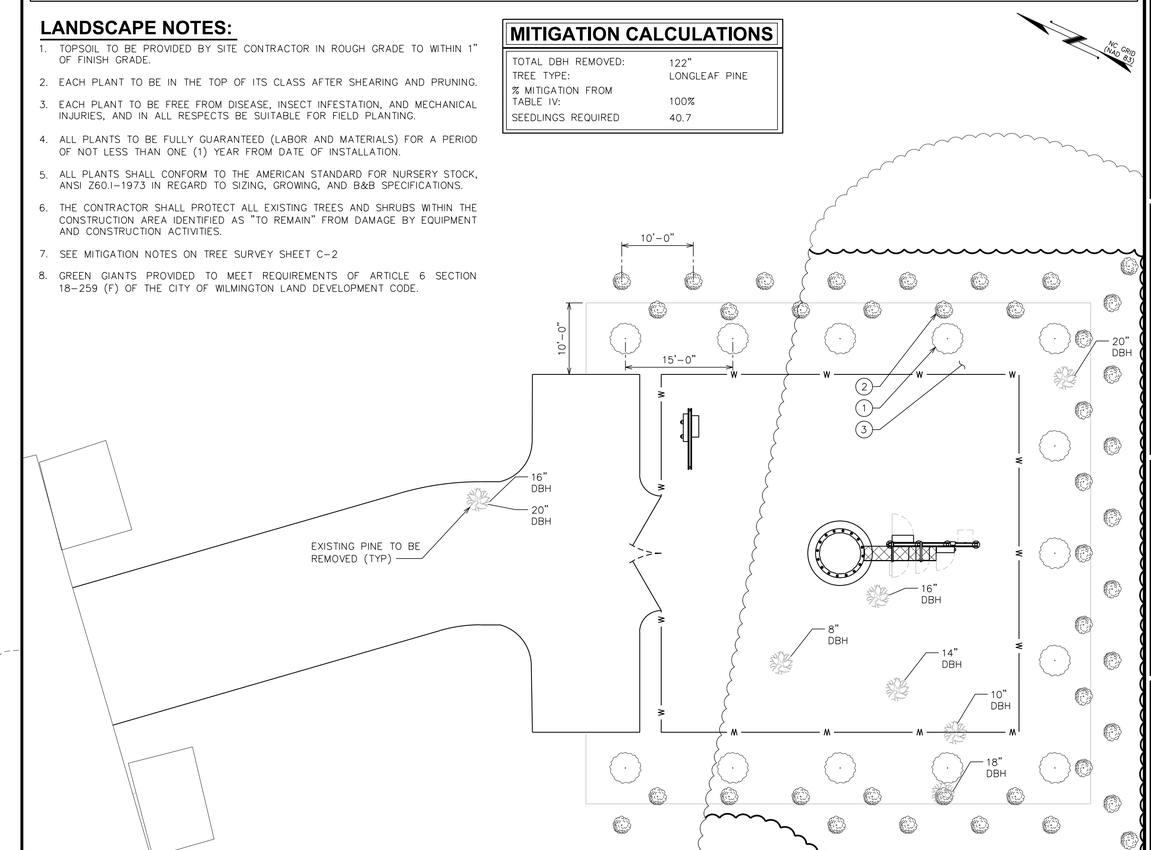

LANDSCAPING PLAN

SCALE: 1" = 10'

0 10 20
SCALE IN FEET

PLANS PREPARED FOR:
CTG
8240 BALLANTYNE COMMONS PARKWAY
CHARLOTTE, NC 28277
PHONE: (919) 345-4789

SEAL:

NORTH CAROLINA PROFESSIONAL SEAL 037920 ENGINEER KIMBERLY S. MARTIN

December 18, 2015

REV	DATE	ISSUED FOR:
3	12-18-15	CONSTRUCTION
2	11-30-15	PRELIMINARY
1	11-11-15	PRELIMINARY
0	10-02-15	PRELIMINARY

DRAWN BY: MMS CHECKED BY: SCB

PROJECT INFORMATION:
MESSIAH LUTHERAN
NC-010004
TMO ID: 5WI0554
3302 SOUTH COLLEGE ROAD
WILMINGTON, NC 28412
(NEW HANOVER COUNTY)

PLANS PREPARED BY:
TOWER ENGINEERING PROFESSIONALS
326 TRYON ROAD
RALEIGH, NC 27603-5263
OFFICE: (919) 661-6351
FAX: (919) 661-6350
N.C. LICENSE #C-1794

SHEET TITLE: **GRADING PLAN & LANDSCAPING PLAN**

SHEET NUMBER: **C-3**

REVISION: 3

TEP # 62934

NOTES:

1. SIGNS SHALL BE FABRICATED FROM CORROSION RESISTANT PRESSED METAL, AND PAINTED WITH LONG LASTING UV RESISTANT COATINGS.
2. SIGNS (EXCEPT WHERE NOTED OTHERWISE) SHALL BE MOUNTED TO THE TOWER, GATE AND FENCE USING A MINIMUM OF 9 GAUGE ALUMINUM WIRE, HOG RINGS (AS UTILIZED IN FENCE INSTALLATIONS) OR BRACKETS WHERE NECESSARY. BRACKETS SHALL BE OF SIMILAR METAL AS THE STRUCTURE TO AVOID GALVANIC CORROSION.
3. ADDITIONAL E911 ADDRESS SIGNS ARE REQUIRED AT EACH ACCESS ROAD GATE LEADING TO THE COMPOUND AS WELL AS ON THE COMPOUND GATE ITSELF.
4. ADDITIONAL FCC REGISTRATION # SIGNS ARE REQUIRED AT EACH ACCESS ROAD GATE LEADING TO THE COMPOUND AS WELL AS ON THE COMPOUND GATE ITSELF. SIGN SHALL MEASURE (20" LONG x 4" TALL). THE LETTERS SHALL BE 1" AND THE NUMBERS SHALL BE 2".
5. RECOMMENDED SOURCES FOR OBTAINING SIGNAGE:

ST. CLAIR SIGNS
3184 WADE HAMPTON BOULEVARD
TAYLORS, SC 29687
(864) 244-0040

RF EXPOSURE SIGNS
RICHARD TELL ASSOCIATES
3433 RINGSTAR ROAD, SUITE 3
NORTH LAS VEGAS, NV 89030
(702) 645-3338

EXCEL SIGN & DECAL
1509 NORTH MILPITAS BLVD.
MILPITAS, CA 95035
(408) 942-8881

ATTENTION

THE SITE SHALL ONLY CONTAIN SIGNAGE AS MANDATED BY THE FCC.

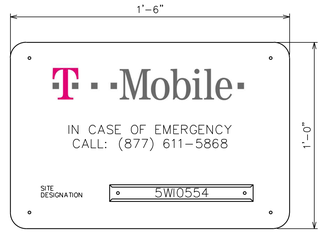

EMERGENCY SIGN
(RED METAL W/ WHITE LETTERING)

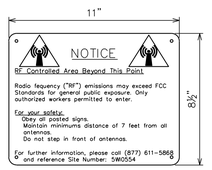

RF NOTICE SIGN
(WHITE METAL SIGN W/BLACK LETTERING)

UNDERGROUND CONDUIT(S) TRENCHING DETAIL

SCALE: N.T.S.

NOTE:

(2) GROUND LEADS FROM BOTH TOWER BOTTOM GROUND BAR AND ICE BRIDGE GROUND BAR

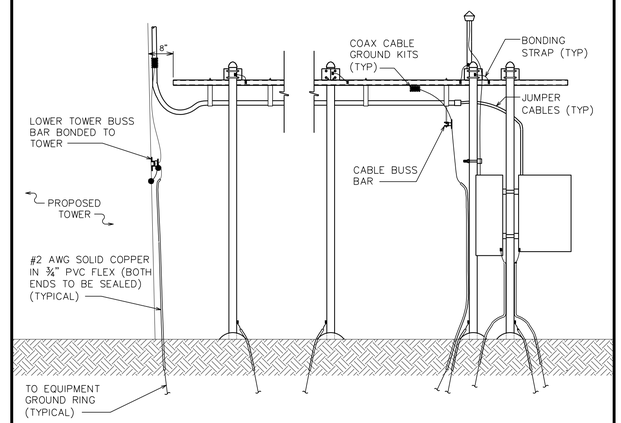

ICE BRIDGE DETAIL / COAX / GROUND BAR ELEVATION

SCALE: N.T.S.

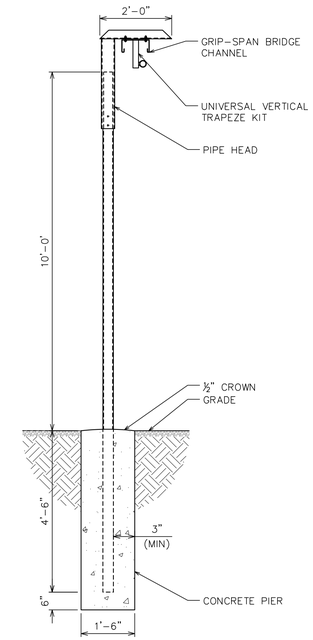

ICE BRIDGE DETAIL

SCALE: ½" = 1'-0"

NOTE:

MOUNT PER MANUFACTURER'S SPECIFICATIONS. DIMENSIONS SHOWN INCLUDE OUTDOOR ENCLOSURE.

PLAN VIEW

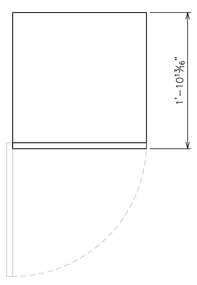

FRONT VIEW

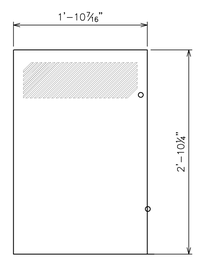

PBC 05 CABINET DETAILS

SCALE: 1" = 1'-0"

0 1 2
SCALE IN FEET

NOTES:

1. MOUNT PER MANUFACTURER'S SPECIFICATIONS.
2. WESTELL BOXER CABINET TO BE INSTALLED ON H-FRAME EXTENSION BY OTHERS AS NEEDED.

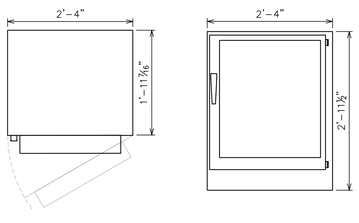

PLAN VIEW **FRONT VIEW**

SSC CABINET DETAILS

SCALE: 1" = 1'-0"

0 1 2
SCALE IN FEET

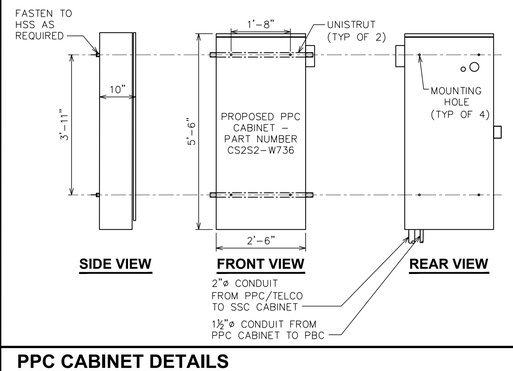

PPC CABINET DETAILS

SCALE: N.T.S.

FENCE NOTE:

FENCE TO BE MAINTAINED BY CTG. ONLY FAUX WOOD AND HOT DIPPED GALVANIZED STEEL SCREWS ARE TO BE USED.

DRAWING NOTES:

1. 1x6 FAUX WOOD. ATTACH TO 2x4'S WITH HOT DIPPED GALVANIZED STEEL SCREWS.
2. 2x4 TREATED WOOD. ATTACH TO GALVANIZED FENCE POST WITH SUPPORT BRACKET AND ⅜"ø X 1" LAG BOLT (TYP.)
3. GALVANIZED FENCE POST
4. WOOD FENCE TO BE APPROPRIATELY STAINED OR PAINTED.

8' HIGH FENCE	FOOTINGS
LINE POST – 2" O.D.	9" X 36"
CORNER POST – 3" O.D.	12" X 48"
DRIVEWAY GATE POST – 4" O. D.	12" X 48"
WALKWAY GATE POST – 3" O.D.	12 X 48"

WOODEN FENCE ATTACHMENT BRACKET	
LINE POST – 2" O.D.	2"ø ATTACH. BRACKET
CORNER POST – 3" O.D.	3"ø ATTACH. BRACKET
DRIVEWAY GATE POST – 4" O. D.	4"ø ATTACH. BRACKET

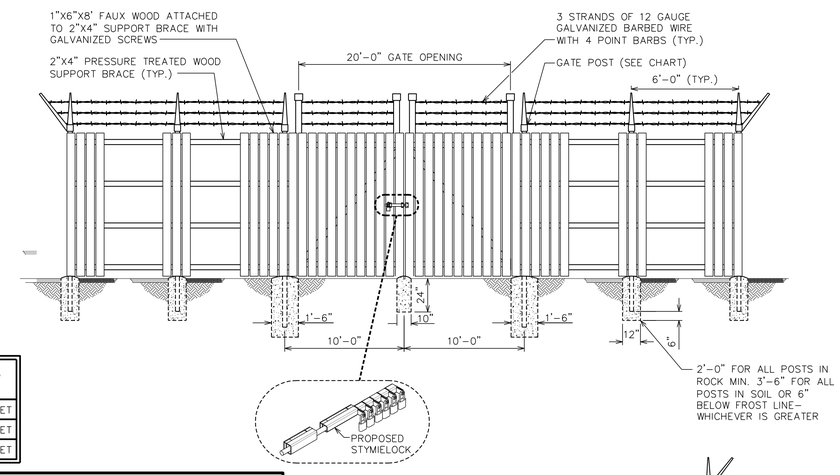

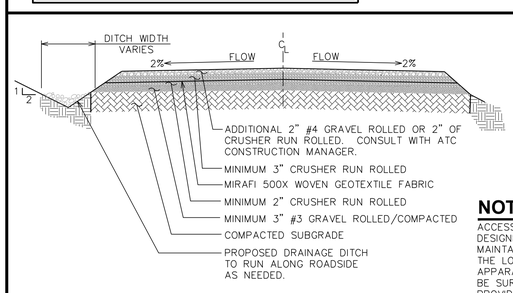

NOTE:

ACCESS ROADS ARE DESIGNED AND SHALL BE MAINTAINED TO SUPPORT THE LOADS OF FIRE APPARATUS AND SHALL BE SURFACED AS TO PROVIDE ALL-WEATHER DRIVING CAPABILITIES.

STANDARD ROAD SECTION (GOOD SUBGRADE)

SCALE: N.T.S.

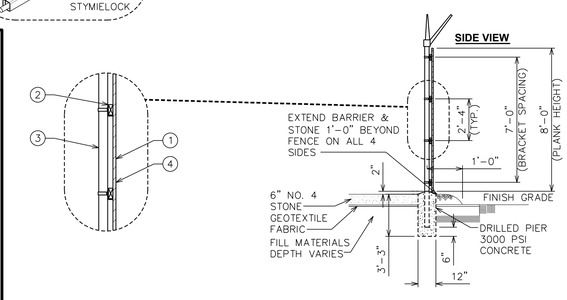

WOOD FENCE DETAILS

SCALE: N.T.S.

PLANS PREPARED FOR:
CTG
8240 BALLANTYNE COMMONS PARKWAY
CHARLOTTE, NC 28277
PHONE: (919) 345-4789

SEAL:

NORTH CAROLINA PROFESSIONAL SEAL 037920 ENGINEER KIMBERLY S. MARTIN

December 18, 2015

REV	DATE	ISSUED FOR:
3	12-18-15	CONSTRUCTION
2	11-30-15	PRELIMINARY
1	11-11-15	PRELIMINARY
0	10-02-15	PRELIMINARY

DRAWN BY: MWS CHECKED BY: SCB

PROJECT INFORMATION:
MESSIAH LUTHERAN
NC-010004
TMO ID: 5WI0554
3302 SOUTH COLLEGE ROAD
WILMINGTON, NS 28412
(NEW HANOVER COUNTY)

PLANS PREPARED BY:
TOWER ENGINEERING PROFESSIONALS
326 TRYON ROAD
RALEIGH, NC 27603-5263
OFFICE: (919) 661-6351
FAX: (919) 661-6350
N.C. LICENSE # C-1794

SHEET TITLE: **CIVIL DETAILS**

SHEET NUMBER: **C-4**

REVISION: 3

TEP #: 62934

ELECTRICAL NOTES:

SCOPE:

1. SHALL INCLUDE ALL LABOR, MATERIALS AND APPLIANCES REQUIRED FOR THE FURNISHING, INSTALLING AND TESTING, COMPLETE AND READY FOR OPERATION OF ALL WORK SHOWN ON THE DRAWING AS SPECIFIED HEREIN:
   1. ELECTRIC SERVICE
   2. CONDUIT AND RACEWAY
   3. CONDUCTORS
   4. MISCELLANEOUS MATERIALS
   5. TELEPHONE CONDUITS
   6. LIGHTNING ARRESTING SYSTEM

CODES

1. THE INSTALLATION SHALL COMPLY WITH ALL APPLICABLE LAWS AND CODES. THESE INCLUDE BUT ARE NOT LIMITED TO THE LATEST EDITIONS OF:
   A. THE NATIONAL ELECTRICAL SAFETY CODE
   B. THE NATIONAL ELECTRIC CODE – NFPA–70
   C. THE INTERNATIONAL ELECTRIC CODE – IEC
   D. LOCAL AND STATE AMENDMENTS
   E. REGULATIONS OF THE SERVING UTILITY COMPANY
   F. NCECC
2. ALL PERMITS REQUIRED SHALL BE OBTAINED BY THE CONTRACTOR.
3. AFTER COMPLETION AND FINAL INSPECTION OF THE WORK, THE OWNER SHALL BE FURNISHED A CERTIFICATE OF COMPLETION AND APPROVAL.

TESTING

1. UPON COMPLETION OF THE INSTALLATION, OPERATE AND ADJUST ALL EQUIPMENT AND SYSTEMS TO MEET SPECIFIED PERFORMANCE REQUIREMENTS. ALL TESTING SHALL BE DONE BY QUALIFIED PERSONNEL.

GUARANTEE

1. IN ADDITION TO THE GUARANTEE OF THE EQUIPMENT BY THE MANUFACTURER, EACH PIECE OF EQUIPMENT SPECIFIED HEREIN SHALL ALSO BE GUARANTEED FOR DEFECTS OF MATERIAL OR WORKMANSHIP OCCURRING DURING A PERIOD OF ONE (1) YEAR FROM FINAL ACCEPTANCE OF THE WORK BY THE OWNER. WITHOUT EXPENSE TO THE OWNER ALL WARRANTEE CERTIFICATES & GUARANTEES FURNISHED BY THE MANUFACTURERS SHALL BE TURNED OVER TO THE OWNER.

CO-ORDINATION:

1. CONTRACTOR SHALL COORDINATE ALL WORK WITH THE POWER AND TELEPHONE COMPANIES AND SHALL COMPLY WITH ALL SERVICE REQUIREMENTS OF EACH UTILITY COMPANY.

EXAMINATION OF SITE

1. PRIOR TO BEGINNING WORK, THE CONTRACTOR SHALL VISIT THE SITE OF THE JOB AND SHALL FAMILIARIZE HIMSELF WITH ALL CONDITIONS AFFECTING THE PROPOSED ELECTRICAL INSTALLATION AND SHALL MAKE PROVISIONS AS TO THE COST THEREOF. FAILURE TO COMPLY WITH THE INTENT OF THIS PARAGRAPH WILL IN NO WAY RELIEVE THE CONTRACTOR OF PERFORMING ALL WORK NECESSARY FOR A COMPLETE AND WORKING SYSTEM OR SYSTEMS.

CUTTING, PATCHING AND EXCAVATION:

1. COORDINATION OF ALL SLEEVES, CHASES, ETC., WILL BE REQUIRED PRIOR TO THE CONSTRUCTION OF ANY PORTION OF THE WORK. ALL CUTTING AND PATCHING OF WALLS, PARTITIONS, FLOORS, AND CHASES IN CONCRETE, WOOD, STEEL OR MASONRY SHALL BE DONE AS PROVIDED ON THE DRAWINGS.
2. ALL NECESSARY EXCAVATIONS AND BACKFILLING INCIDENTAL TO THE WORK UNLESS SPECIFICALLY NOTED OTHERWISE ON THE DRAWING SHALL BE PROVIDED BY THIS CONTRACTOR.
3. SEAL ALL PENETRATION THROUGH WALL AND FLOORS WITH APPROVED GROUT.

EXTERIOR CONDUIT:

1. ALL EXPOSED CONDUIT SHALL BE NEATLY INSTALLED AND RUN PARALLEL OR PERPENDICULAR TO STRUCTURAL ELEMENTS. SUPPORTS AND MOUNTING HARDWARE SHALL BE HOT DIPPED GALVANIZED STEEL.

RACEWAYS

1. ALL CONDUCTORS SHALL BE INSTALLED IN CONDUIT. ALL CONDUIT SHALL BE RIGID STEEL, EMT OR SCH40 PVC AS INDICATED ON THE DRAWINGS.
2. WHERE INSTALLED ON EXTERIORS AND EXPOSED TO DAMAGE, ALL CONDUIT SHALL BE RIGID STEEL. ALUMINUM CONDUIT SHALL NOT BE ALLOWED.
3. CONCEALED CONDUIT IN WALLS OR INTERIOR SPACES ABOVE GRADE MAY BE EMT.
4. UNDERGROUND CONDUITS SHALL BE RIGID STEEL OR SCHEDULE 40 PVC AS INDICATED ON THE DRAWINGS.
5. ALL CONDUIT RUNS SHALL USE APPROVED COUPLINGS AND CONNECTORS. PROVIDE INSULATED BUSHING FOR ALL CONDUIT TERMINATIONS. ALL CONDUIT RUNS IN A WET LOCATION SHALL HAVE WATERPROOF FITTINGS.
6. PROVIDE SUPPORTS FOR ALL CONDUITS IN ACCORDANCE WITH NEC REQUIREMENTS. ALL CONDUITS SHALL BE SIZED AS REQUIRED BY NEC.
7. BURIAL DEPTH OF ALL CONDUITS SHALL BE AS REQUIRED BY CODE FOR EACH SPECIFIC CONDUIT TYPE AND APPLICATION.
8. CONDUIT ROUTES ARE SCHEMATIC. CONTRACTOR SHALL FIELD VERIFY BEFORE BID. COORDINATE ROUTE WITH WIRELESS CARRIER AND BUILDING OWNER.

EQUIPMENT:

1. ALL DISCONNECT SWITCHES SHALL BE SERVICE ENTRANCE RATED, HEAVY DUTY TYPE.
2. NEW CIRCUIT BREAKERS SHALL BE RATED TO WITHSTAND THE MAXIMUM AVAILABLE FAULT CURRENT AS DETERMINED BY THE LOCAL UTILITY. CONTRACTOR SHALL VERIFY MAXIMUM AVAILABLE FAULT CURRENT, AND COORDINATE INSTALLATION WITH THE LOCAL UTILITY BEFORE STARTING WORK.

CONDUCTORS

1. FURNISH AND INSTALL CONDUCTORS CALLED FOR IN THE DRAWINGS. ALL CONDUCTORS SHALL HAVE TYPE THWN (MIN) (75° C) INSULATION, RATED FOR 600 VOLTS.
2. ALL CONDUCTORS SHALL BE COPPER, THE USE OF ALUMINUM CONDUCTORS SHALL NOT BE ALLOWED. ALL CONDUCTORS SHALL BE UL LISTED AND SHALL BE PROVIDED AND INSTALLED AS FOLLOWS:
   A. MINIMUM WIRE SIZE SHALL BE #12 AWG.
   B. ALL CONDUCTORS SIZE #8 AND LARGER SHALL BE STRANDED. CONDUCTORS SIZED #10 AND SMALLER MAY BE SOLID OR STRANDED.
   C. CONNECTION FOR #10 AWG AND SMALLER SHALL BE BY TWISTING TIGHT AND INSTALLING INSULATED PRESSURE OR WIRE NUT CONNECTIONS.
   D. CONNECTION FOR #8 AWG AND LARGER SHALL BE BY USE OF STEEL CRIMP–ON SLEEVES WITH NYLON INSULATOR.
3. ALL CONDUCTORS SHALL BE COLOR CODED IN ACCORDANCE WITH NEC STANDARDS.
4. THE RACEWAY SYSTEM SHALL BE COMPLETE BEFORE INSTALLING CONDUCTORS

PENETRATIONS:

1. CONTRACTOR SHALL COMPLY WITH UL PENETRATION DETAILS FOR PENETRATIONS OF ALL RATED WALLS, ROOF, ETC.

GROUNDING

1. ALL ELECTRICAL NEUTRALS, RACEWAYS AND NON–CURRENT CARRYING PARTS OF ELECTRICAL EQUIPMENT AND ASSOCIATED ENCLOSURES SHALL BE GROUNDED IN ACCORDANCE WITH NEC ARTICLE 250. THIS SHALL INCLUDE NEUTRAL CONDUCTORS, CONDUITS, SUPPORTS, CABINETS, BOXES, GROUND BUSSES, ETC. THE NEUTRAL CONDUCTOR FOR EACH SYSTEM SHALL BE GROUNDED BY ONE POINT ONLY.
2. PROVIDE GROUND CONDUCTOR IN ALL RACEWAYS.
3. PROVIDE BONDING AND GROUND TO MEET NFPA 780 – LIGHTNING PROTECTION AS A MINIMUM.
4. PROVIDE GROUNDING SYSTEM AS INDICATED ON THE DRAWINGS, AS REQUIRED BY THE NATIONAL ELECTRIC CODE AND RADIO EQUIPMENT MANUFACTURER.

ABBREVIATIONS AND LEGEND

A	– AMPERE	PVC	– SCH40 RIGID NON–METALLIC CONDUIT
AFG	– ABOVE FINISHED GRADE	RGS	– RIGID GALVANIZED STEEL CONDUIT
ATS	– AUTOMATIC TRANSFER SWITCH	SW	– SWITCH
AWG	– AMERICAN WIRE GAUGE	TGB	– TOWER GROUND BAR
BCW	– BARE COPPER WIRE	UL	– UNDERWRITERS LABORATORIES
BFG	– BELOW FINISHED GRADE	V	– VOLTAGE
BKR	– BREAKER	W	– WATTS
C	– CONDUIT	XFMR	– TRANSFORMER
CKT	– CIRCUIT	XMTR	– TRANSMITTER
DISC	– DISCONNECT		
EGR	– EXTERNAL GROUND RING		
EMT	– ELECTRIC METALLIC TUBING		
FSC	– FLEXIBLE STEEL CONDUIT		
GEN	– GENERATOR		
GPS	– GLOBAL POSITIONING SYSTEM		
GRD	– GROUND		
IGB	– ISOLATED GROUND BAR		
IGR	– INTERIOR GROUND RING (HALO)		
KW	– KILOWATTS		
NEC	– NATIONAL ELECTRIC CODE		
PCS	– PERSONAL COMMUNICATION SYSTEM		
PH	– PHASE		
PNL	– PANEL		
PNLBD	– PANELBOARD		

-------E-------	UNDERGROUND ELECTRICAL CONDUIT
-------T-------	UNDERGROUND TELEPHONE CONDUIT
	KILOWATT–HOUR METER
----------	UNDERGROUND BONDING AND GROUNDING CONDUCTOR.
Ø	GROUND ROD
●	CADWELD
⊠	GROUND ROD WITH INSPECTION WELL

GENERAL NOTE

ICE BRIDGE NOT SHOWN FOR CLARITY

DRAWING NOTES

1. PPC CABINET
2. SSC CABINET
3. PBC CABINET
4. 3'x3' NEMA 3 ENCLOSURE FOR HYBRID CABLE FROM TOWER
5. PROPOSED 3" POWER CONDUIT FROM PROPOSED METER TO PROPOSED PPC CABINET
6. PROPOSED 3" TELCO PVC CONDUIT
7. PROPOSED 2" CONDUIT FOR AC POWER FROM PPC TO SSC CABINET
8. PROPOSED 2" CONDUIT FOR CAT6
9. PROPOSED PULL BOX AS NECESSARY (TYP)
10. PROPOSED 2" CONDUIT FROM PPC POWER PANEL TO PBC CABINET
11. PROPOSED (3) 2" FLEX CONDUIT. (1) FOR HYBRID DC AND (2) FOR FUTURE USE.
12. PROPOSED 200A, 120/240V, 1ø, 3 WIRE METER WITH SERVICE DISCONNECT (120/240V, 200A, FUSED AT 200A)
13. COORDINATE WITH LOCAL UTILITY COMPANY
14. PROPOSED 2" FLEX CONDUIT FROM NEMA 3 TO SSC FOR FIBER (TYP OF 2)
15. PROPOSED 2" CONDUIT FOR AAV –48

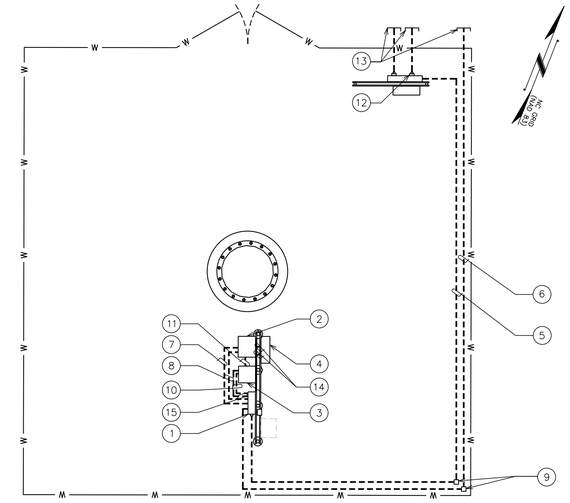

UTILITY ROUTING PLAN

SCALE: ⅛" = 1'–0"

0 8 16
SCALE IN FEET

NOTES:

1. ACTUAL SEPERATION OF CONDUITS TO BE DETERMINED BY SITE SPECIFIC REQUIREMENTS.
2. UNDERGROUND CONDUIT TRENCH TO BE LOCATED AS CLOSE TO COMPOUND FENCE AS POSSIBLE WITHOUT COMPROMISING THE INTEGRITY OF THE FENCE.
3. PROVIDE PVC CONDUIT BELOW GRADE EXCEPT AS NOTED BELOW.
4. PROVIDED RGS CONDUIT AND ELBOWS AT STUB–UP LOCATIONS (I.E. SERVICE POLES, EQUIPMENT, ETC.)
5. PROVIDE RGS CONDUIT FOR INSTALLATIONS BELOW PARKING LOTS AND ROADWAYS.

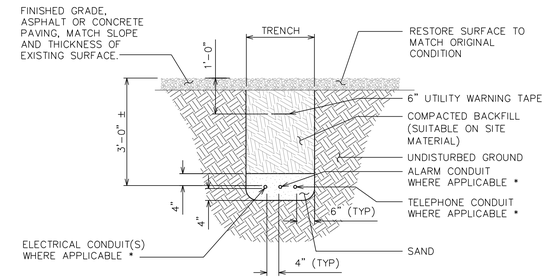

* SEPARATION DIMENSION TO BE VERIFIED WITH LOCAL UTILITY COMPANY REQUIREMENTS

UNDERGROUND TRENCHING DETAIL

SCALE: N.T.S.

ONE-LINE DIAGRAM NOTES:

1. ELECTRICAL SERVICE SHALL BE 200A, 240/120V, 1ø, 3W.
2. FOR COMPLETE INTERNAL WIRING AND ARRANGEMENT, REFER TO VENDOR PRINTS PROVIDED BY EQUIPMENT MANUFACTURER.

NOTES:

1. CONTRACTOR SHALL VERIFY AVAILABLE FAULT CURRENT WITH POWER COMPANY AND ENSURE ALL ELECTRICAL EQUIPMENT IS SUITABLE FOR AVAILABLE FAULT CURRENT.
2. CONTRACTOR SHALL COORDINATE UTILITY SERVICES WITH LOCAL UTILITY COMPANIES. VERIFY ALL REQUIREMENTS WITH UTILITY COMPANY STANDARDS.
3. ONE–LINE DIAGRAM IS SCHEMATIC ONLY AND NOT INDICATIVE OF ACTUAL EQUIPMENT LAYOUT.
4. CONTRACTOR SHALL LABEL METER SOCKET WITH SERVICE OWNER NAMEPLATE W/ ½" MINIMUM LETTERS.
5. ALL EQUIPMENT WILL HAVE A MINIMUM AIC OF 10KA. CONTRACTOR TO DETERMINE AVAILABLE FAULT CURRENT BEFORE ENERGIZING EQUIPMENT.

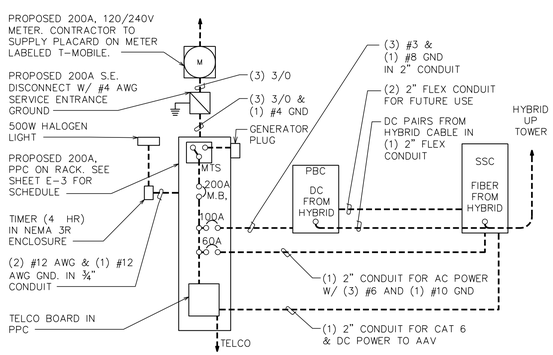

ONE-LINE DIAGRAM

SCALE: N.T.S.

NOTES:

1. WATT–HOUR SOCKETS/SERVICE DISCONNECT MEANS. UTILITY COMPANY TO PROVIDE METERS. PROVIDE IN ACCORDANCE WITH UTILITY COMPANY REQUIREMENTS.
2. ALL NEW STRUCTURAL STEEL SHALL BE HOT DIP GALVANIZED IN ACCORDANCE WITH ASTM A123 G90 AFTER FABRICATION.
3. FIELD ABRASIONS SHALL BE TOUCH UP PAINTED WITH ZINC RICH GALVANIZING REPAIR IN ACCORDANCE WITH ASTM A780.
4. ALL EXPOSED ENDS OF CONDUIT SHALL HAVE WEATHERPROOF CAPS.
5. PROVIDE 200LB. TEST PULL WIRES IN EACH TELEPHONE AND POWER CONDUIT. STUB CONDUITS INTO ENCLOSURE AND LABEL.
6. THE POWER COMPANY SHALL TERMINATE THE POWER CABLES (SUPPLIED AND INSTALLED BY THE POWER COMPANY) AT THE UTILITY METERS LOCATED ON THE EQUIPMENT RACK.
7. CONTRACTOR TO VERIFY RACK DIMENSIONS AND STRUT SPACING RELATIVE TO METER BASE MODEL NUMBER.
8. GROUNDING ELECTRODE CONDUCTOR IS SIZED FOR SINGLE 200A SERVICE ONLY. IF METER BANK SHARES A COMMON NEUTRAL/GROUND POINT, CONTRACTOR WILL INSTALL (1) 2/0 COPPER GEC INSTEAD.

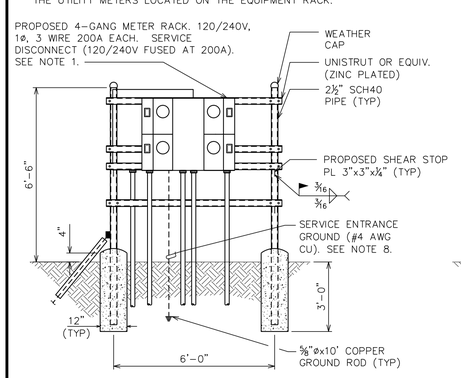

SERVICE RACK - FRONT

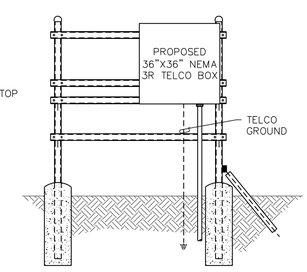

SERVICE RACK - REAR

CTG SERVICE RACK DETAIL

SCALE: N.T.S.

DRAWING NOTES

1. ALL EQUIPMENT SHALL BE GROUNDED
2. ALL ELECTRICAL ENCLOSURES TO BE NEMA 3R RATED
3. SEE SITE PLAN FOR GENERAL ROUTING OF ALL CONDUITS. DETERMINE EXACT ROUTINGS IN FIELD.
4. ELECTRICAL EQUIPMENT SHALL BE MINIMUM 3'–0" FROM ANY STRUCTURE
5. ALL COVER PLATES SHALL BE WEATHERPROOF
6. INSTALL CAPS ON ALL OPEN POSTS
7. INSTALL UNISTRUT BEHIND SUPPORT POST AS SHOWN

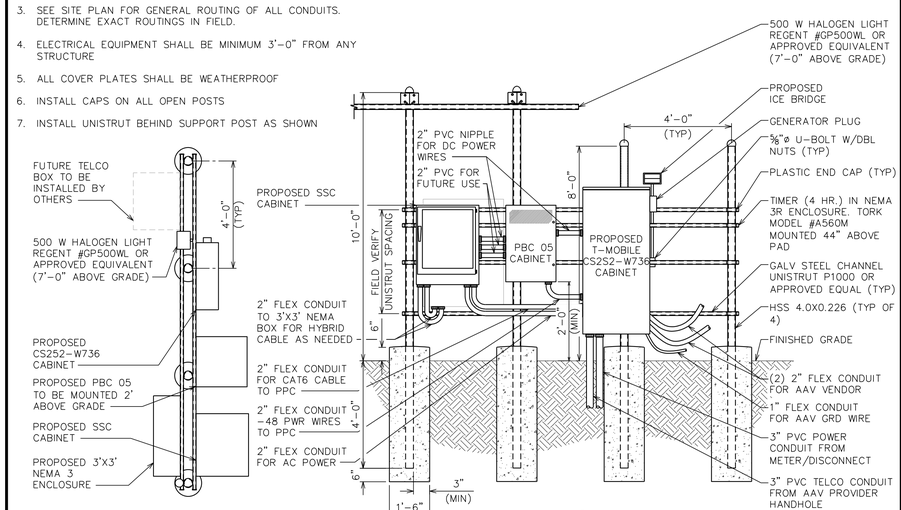

PLAN VIEW

ELEVATION VIEW

T-MOBILE PPC RACK DETAIL

SCALE: N.T.S.

PLANS PREPARED FOR:

CTG
8240 BALLANTYNE COMMONS PARKWAY
CHARLOTTE, NC 28277
PHONE: (919) 345-4789

SEAL:

NORTH CAROLINA PROFESSIONAL SEAL 042109 ENGINEER MARK S. QUAKENBUSH

December 18, 2015

REV	DATE	ISSUED FOR:
3	12-18-15	CONSTRUCTION
2	11-30-15	PRELIMINARY
1	11-11-15	PRELIMINARY
0	10-02-15	PRELIMINARY

DRAWN BY: MMS CHECKED BY: SCB

PROJECT INFORMATION:

MESSIAH LUTHERAN
NC-010004
TMO ID: 5WI0554
3302 SOUTH COLLEGE ROAD
WILMINGTON, NC 28412
(NEW HANOVER COUNTY)

PLANS PREPARED BY:

TOWER ENGINEERING PROFESSIONALS
326 TRYON ROAD
RALEIGH, NC 27603-5263
OFFICE: (919) 661-6351
FAX: (919) 661-6350
N.C. LICENSE # C-1794

SHEET TITLE: **ELECTRICAL NOTES, UTILITY ROUTING & RACK DETAILS**

SHEET NUMBER: **E-1**

REVISION: 3

TEP #: 62934

GROUNDING NOTES:

1. CONTRACTOR SHALL VERIFY THAT GROUNDING ELECTRODES SHALL BE CONNECTED IN A RING USING #2 AWG BARE TINNED COPPER WIRE. THE TOP OF THE GROUND RODS AND THE RING CONDUCTOR SHALL BE 2 FEET BELOW FINISHED GRADE. GROUNDING ELECTRODES SHALL BE DRIVEN ON 10'-0" CENTERS (PROVIDE AND INSTALL AS REQUIRED. REQUIRED PER PLAN BELOW).
2. BONDING OF THE GROUNDED CONDUCTOR (NEUTRAL) AND THE GROUNDING CONDUCTOR SHALL BE AT THE SERVICE DISCONNECTING MEANS. BONDING JUMPER SHALL BE INSTALLED PER N.E.C. ARTICLE 250.30.
3. GROUND RING CONNECTION CONDUCTORS SHALL BE OF EQUAL LENGTH, MATERIAL, AND BONDING TECHNIQUE.
4. CONTRACTOR SHALL ENSURE GROUND RING IS WITHIN 12 TO 36 INCEHES OF THE EQUIPMENT PAD. PROVIDE AND INSTALL GROUNDING CONNECTIONS SHOWN BELOW AS NEEDED PER EXISTING SITE GROUNDING SYSTEM. CONTRACTOR SHALL VERIFY ALL EXISTING SITE GROUNDING CONDITIONS BEFORE STARTING WORK OR PURCHASING EQUIPMENT
5. BOND GROUND BAR TO EXTERNAL GROUND RING WITH 1 RUN OF #2 BARE, TINNED, SOLID COPPER CONDUCTOR IN PVC. CONNECT BAR END WITH 2 HOLE LUG, AND "CADWELD" THE OTHER END TO THE EXTERNAL GROUND ROD.
6. ALL DOWN CONDUCTORS MUST GO DOWN
7. CONTRACTOR SHALL NOTIFY THE CONSTRUCTION MANAGER WHEN THE GROUNDING SYSTEM IS COMPLETE. THE CONSTRUCTION MANAGER SHALL INSPECT THE GROUNDING SYSTEM PRIOR TO BACKFILLING

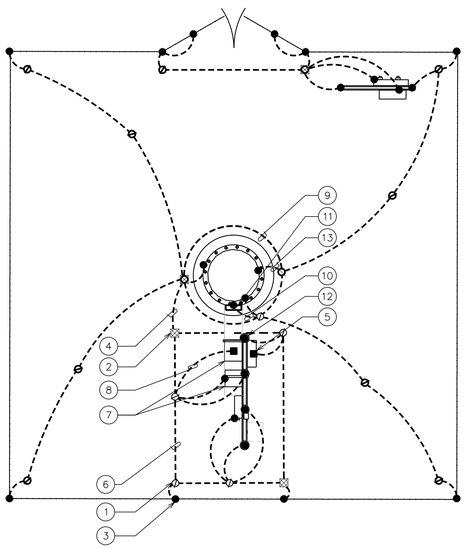

DRAWING NOTES:

1. GROUND ROD ⅝"x10' LONG (TYP)
2. GROUND ROD WITH INSPECTION WELL (TYP)
3. CADWELD (TYP)
4. #2 TINNED SOLID COPPER GROUND WIRE FROM TOWER GROUND RING TO GROUND ROD IN EQUIPMENT GROUND RING. IF DISTANCE IS GREATER THAN 20' BUT LESS THAN 30' INSTALL A GROUND ROD AT THE CENTER.
5. 2-HOLE LUG MECHANICAL CONNECTION (TYP)
6. #2 TINNED SOLID COPPER EQUIPMENT GROUND RING
7. PROPOSED EQUIPMENT CABINET
8. #2 TINNED SOLID COPPER GROUND WIRE FROM GROUND RING TO BUSS BAR INSIDE CABINET.
9. PROPOSED TOWER GROUND RING.
10. #2 TINNED SOLID COPPER GROUND WIRE FROM GROUND BAR TO TOWER GROUND RING
11. ISOLATED BOTTOM TOWER GROUND BAR
12. ICE BRIDGE POST
13. GROUND LEAD FROM TOWER TO TOWER GROUND RING (TYP)

TOWER GROUNDING PLAN

SCALE: ⅛" = 1'-0"

0 8 16
SCALE IN FEET

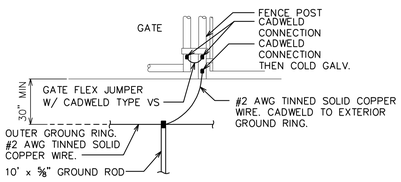

TYPICAL GATE POST GROUNDING DETAIL

SCALE: N.T.S.

NOTE:

MINIMUM SPACING OF 12" BETWEEN ALL CADWELDS

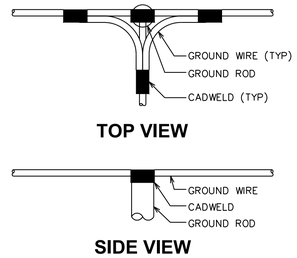

CADWELD GROUNDING DETAIL

SCALE: N.T.S.

NOTE:

THE CONTRACTOR SHALL UTILIZE AN INTERMEDIATE GROUND BAR FOR ANTENNA RAD CENTERS OVER 200'.

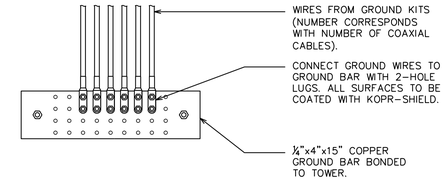

UPPER / INTERMEDIATE GROUND BAR DETAIL

SCALE: N.T.S.

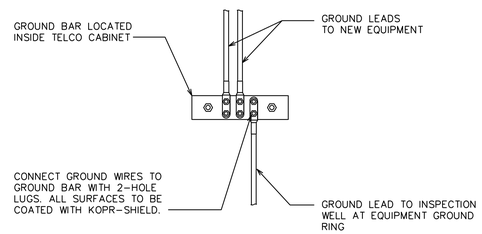

GROUND BAR IN TELCO CABINET

SCALE: N.T.S.

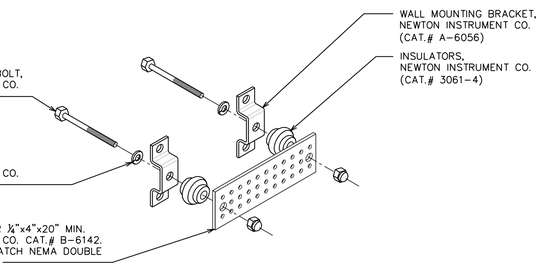

NOTE:

GROUND BAR SHALL BE SIZED TO ACCOMODATE ALL GROUNDING CONNECTIONS REQUIRED PLUS PROVIDE 50% SPARE CAPACITY.

STANDARD GROUND BAR DETAIL

SCALE: N.T.S.

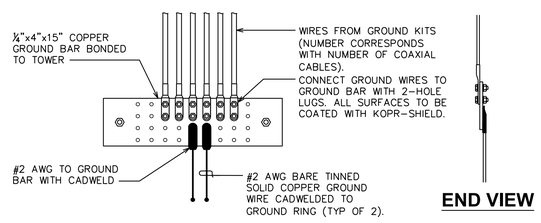

LOWER GROUND BAR DETAIL

SCALE: N.T.S.

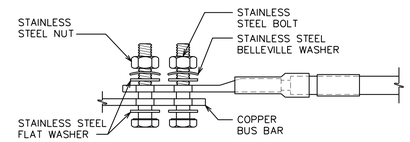

NOTES:

1. ALL HARDWARE SHALL BE 18-8 STAINLESS STEEL, INCLUDING THE BELLEVILLE WASHERS. COAT ALL SURFACES WITH KOPR-SHIELD BEFORE MATING.
2. FOR GROUND BOND TO STEEL ONLY; INSERT A DRAGON TOOTH WASHER BETWEEN THE LUG AND STEEL. COAT ALL SURFACES WITH KOPR-SHIELD.

LUG DETAIL

SCALE: N.T.S.

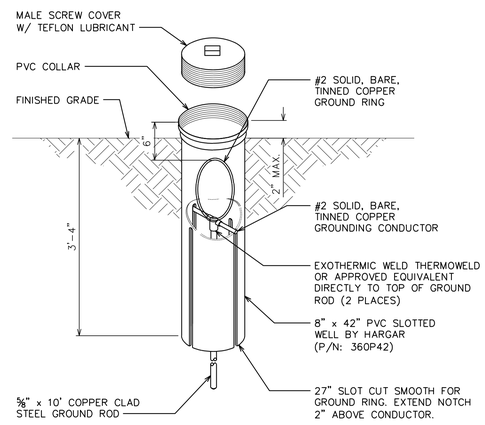

GROUND ROD WITH INSPECTION WELL DETAIL

SCALE: N.T.S.

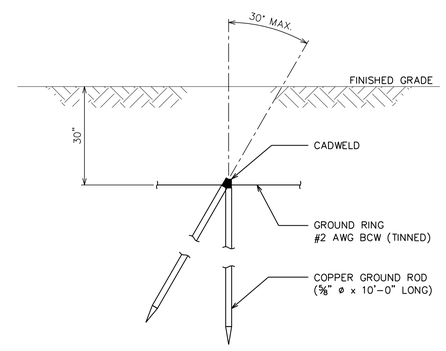

COPPER-CLAD STEEL GROUND ROD DETAIL

SCALE: N.T.S.

PLANS PREPARED FOR:

CTG
8240 BALLANTYNE COMMONS PARKWAY
CHARLOTTE, NC 28277
PHONE: (919) 345-4789

SEAL:

PROFESSIONAL ENGINEER SEAL 042109 MARK S. QUAKENBUSH

December 18, 2015

REV	DATE	ISSUED FOR:
3	12-18-15	CONSTRUCTION
2	11-30-15	PRELIMINARY
1	11-11-15	PRELIMINARY
0	10-02-15	PRELIMINARY

DRAWN BY: MMS CHECKED BY: SCB

PROJECT INFORMATION:

MESSIAH LUTHERAN
NC-010004
TMO ID: 5WI0554
3302 SOUTH COLLEGE ROAD
WILMINGTON, NS 28412
(NEW HANOVER COUNTY)

PLANS PREPARED BY:

TOWER ENGINEERING PROFESSIONALS
326 TRYON ROAD
RALEIGH, NC 27603-5263
OFFICE: (919) 661-6351
FAX: (919) 661-6350
N.C. LICENSE # C-1794

SHEET TITLE:
GROUNDING NOTES & DETAILS I

SHEET NUMBER: **E-2**

REVISION: 3

TEP #: 62934

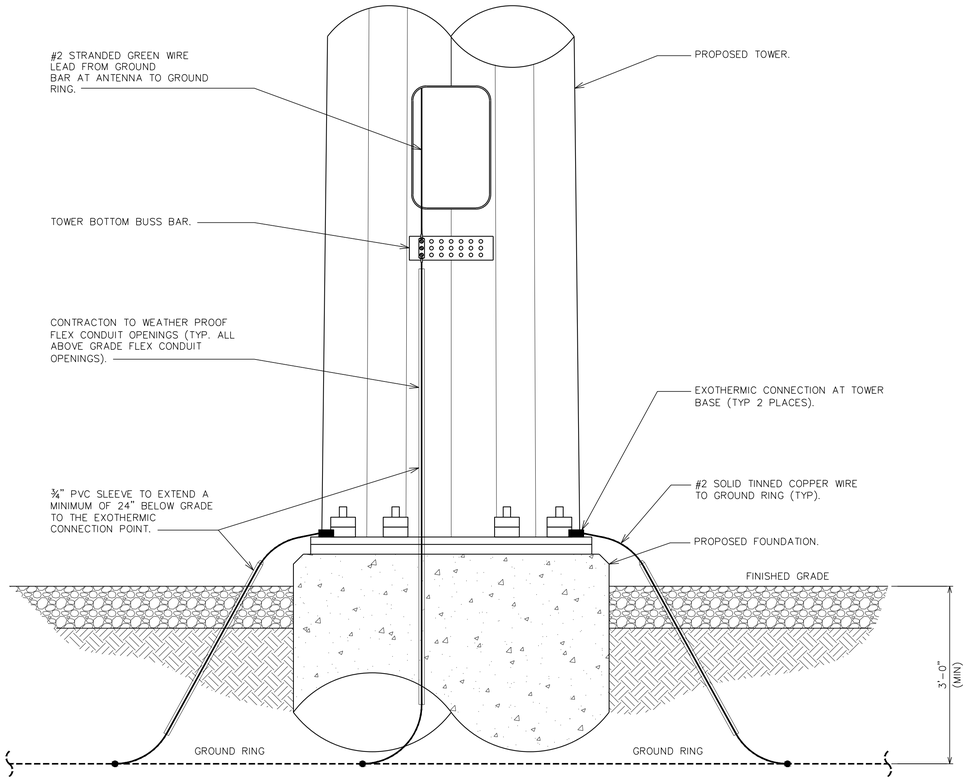

TOWER GROUNDING DETAIL

SCALE: N.T.S.

NOTE:

(1) SECTOR OF ANTENNAS SHOWN

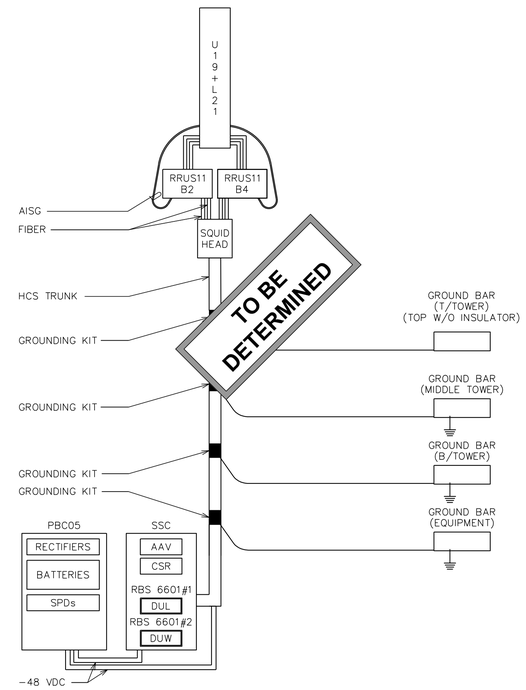

7C ANTENNA CABLE & GROUNDING SCHEMATIC

SCALE: N.T.S.

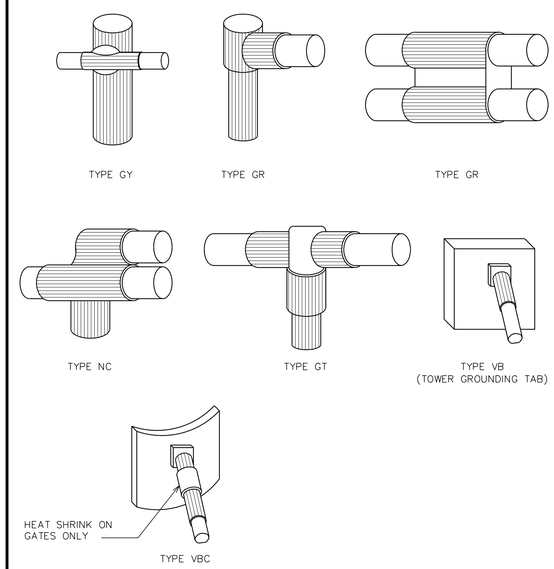

NOTE:

CADWELD "TYPES" SHOWN ARE EXAMPLES. CONSULT WITH PROJECT MANAGER FOR SPECIFIC TYPES OF CADWELDS TO BE USED FOR THIS PROJECT

CADWELL DETAILS

SCALE: N.T.S.

NOTE:

SEE SHEET E-1 FOR PPC RACK DETAIL

PPC SCHEDULE

PANEL DESIGNATION 'A'	120/240 VOLTS	3 WIRE	200A, 2 POLE
WITH SEPARATE GROUND BUSS	1 PHASE	SURFACE MOUNTED	MAIN BREAKER

NO.	LOAD SERVED	øA VA	øB VA	AMP / POLE	AMP / POLE	øB VA	øA VA	LOAD SERVED	NO.
1	PBC	7560	–	100/2	30/2	300	–	SUPPRESSOR	7
2		–	7560			–	300		8
3	SSC	5760	–	60/2	15/1	180	–	GFI	9
4		–	5760		–	–	–	SPARE	10
5	LIGHT	500	–	20/1	–	–	–	SPARE	11
6	FAN	–	200	20/1	–	–	–	SPARE	12
VOLT AMPS		13820	13520			480	300	VOLT AMPS	
		28120						TOTAL VOLT AMPERES	
		35150						DEMAND VA (TOTAL VA X 1.25)	

PPC SCHEDULE

SCALE: N.T.S.

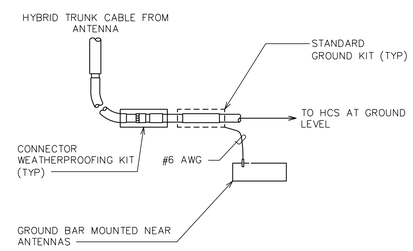

GROUND WIRE TO GROUND BAR CONNECTION AT ANTENNA

SCALE: N.T.S.

NOTE:

DO NOT INSTALL CABLE GROUND KIT AT A BEND.

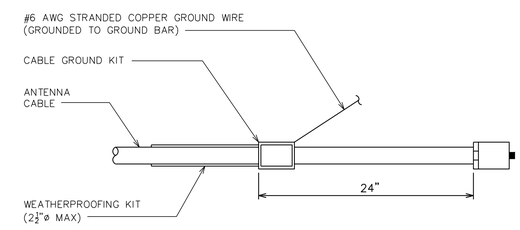

CABLE GROUNDING DETAIL

SCALE: N.T.S.

PLANS PREPARED FOR:

CTG
8240 BALLANTYNE COMMONS PARKWAY
CHARLOTTE, NC 28277
PHONE: (919) 545-4789

SEAL:

NORTH CAROLINA PROFESSIONAL SEAL 042109 ENGINEER MARK S. QUAKENBUSH

December 18, 2015

REV	DATE	ISSUED FOR:
3	12-18-15	CONSTRUCTION
2	11-30-15	PRELIMINARY
1	11-11-15	PRELIMINARY
0	10-02-15	PRELIMINARY

DRAWN BY: MMS CHECKED BY: SCB

PROJECT INFORMATION:

MESSIAH LUTHERAN
NC-010004
TMO ID: 5WI0554
3302 SOUTH COLLEGE ROAD
WILMINGTON, NS 28412
(NEW HANOVER COUNTY)

PLANS PREPARED BY:

TOWER ENGINEERING PROFESSIONALS
326 TRYON ROAD
RALEIGH, NC 27603-5263
OFFICE: (919) 661-6351
FAX: (919) 661-6350
N.C. LICENSE # C-1734

SHEET TITLE:

GROUNDING NOTES & DETAILS II

SHEET NUMBER: **E-3**

REVISION: 3

TEP #: 62934