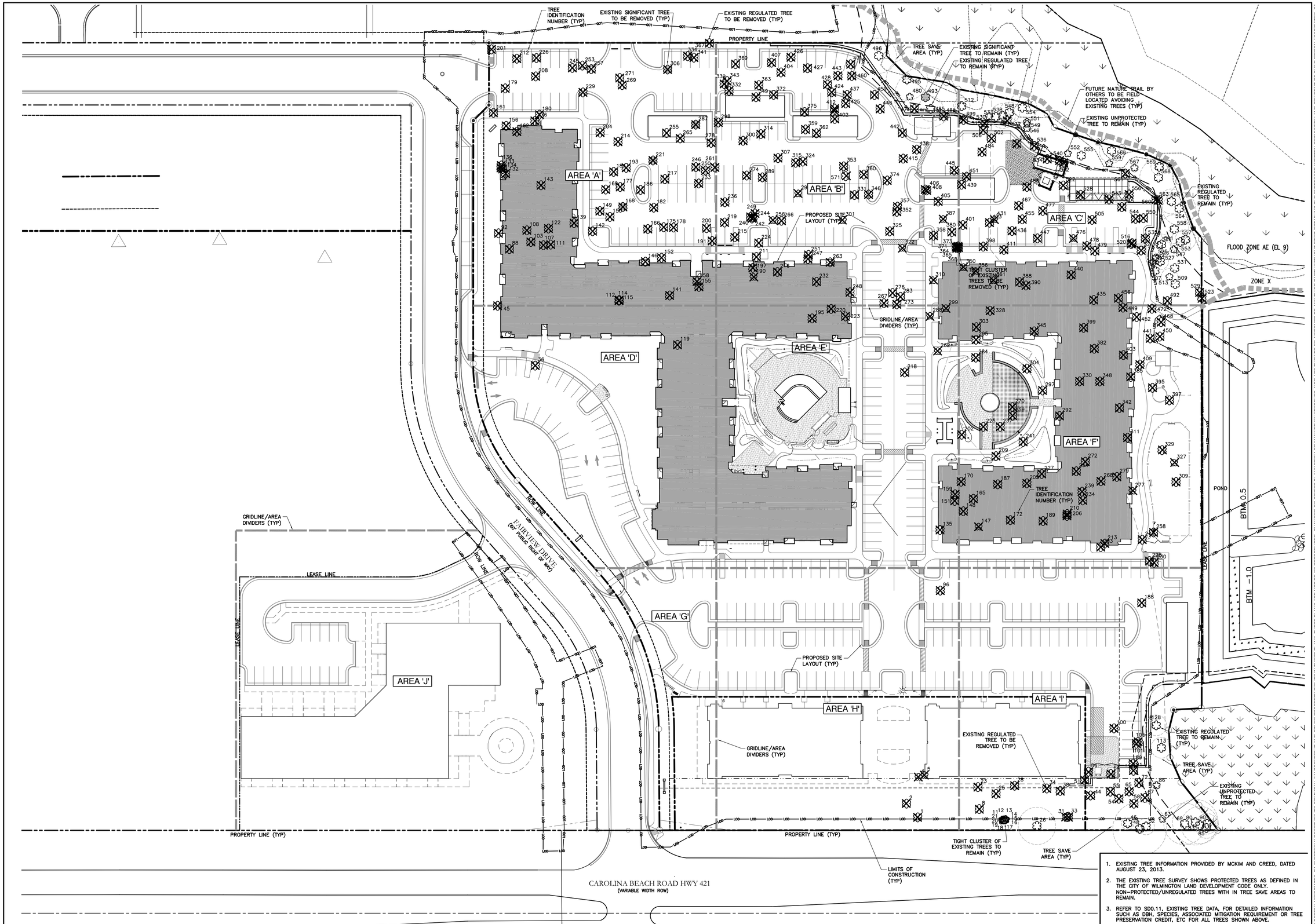

1. EXISTING TREE INFORMATION PROVIDED BY MCKIM AND CREED, DATED AUGUST 23, 2013.
2. THE EXISTING TREE SURVEY SHOWS PROTECTED TREES AS DEFINED IN THE CITY OF WILMINGTON LAND DEVELOPMENT CODE ONLY. NON-PROTECTED/UNREGULATED TREES WITH IN TREE SAVE AREAS TO REMAIN.
3. REFER TO SD0.11, EXISTING TREE DATA, FOR DETAILED INFORMATION SUCH AS DBH, SPECIES, ASSOCIATED MITIGATION REQUIREMENT OR TREE PRESERVATION CREDIT, ETC FOR ALL TREES SHOWN ABOVE.

TREE INVENTORY, PRESERVATION, AND REMOVAL DATA 02

Scale: 1" = 40'

GENERAL NOTES 01

CLINE DESIGN

125 N. Harrington St.
Raleigh, NC 27603
919/833-6413
919/836-1280 FAX
ClineDesignAssoc.com

Meridian at Fairfield Park, LLC.

Fairfield Park

4625 & 4544 Fairview Drive
Wilmington, North Carolina

Full Building Set

CLINE DESIGN ASSOCIATES, P.A. LANDSCAPE ARCHITECTURAL REGISTERED C-143 RALEIGH, NC

REGISTERED LANDSCAPE ARCHITECT No. 395 MICHAEL LATTIMER 5.20.14

PROJECT: 013060

DATE: 03.19.2014

REVISIONS:	DATE
Comments	04-23-2014
Comments	05.20.2014

DRAWN BY: CT

CHECKED BY: MWL

TREE INVENTORY, PRESERVATION AND REMOVAL PLAN

SD0.11

© 2013 CLINE DESIGN ASSOCIATES, PA EXPRESSLY RESERVES ITS COMMON LAW COPYRIGHT AND OTHER PROPERTY RIGHTS IN THESE PLANS. THESE PLANS ARE NOT TO BE REPRODUCED, CHANGED OR COPIED IN ANY FORM OR MANNER WHATSOEVER, NOR ARE THEY TO BE ASSIGNED TO ANY THIRD PARTY WITHOUT FIRST OBTAINING THE EXPRESSED WRITTEN PERMISSION AND CONSENT OF CLINE DESIGN ASSOCIATES, PA.

SITE DATA - PHASE I

Fairfield Park - Phase I	
Current Zoning	MX
Tract Size	3,273,969 Sq. Ft. (75.16 Acres)
Existing Building Square Feet	N/A
Proposed Building Square Feet (All Areas within the MX Area)	
Commercial	8,400 Sq. Ft.
Office	58,200 Sq. Ft.
Patio Homes	173,213 Sq. Ft.
Townhouses	189,828 Sq. Ft.
SF to be Developed	429,641 Sq. Ft.
SF occupied by Structures	
All Buildings	429,641 Sq. Ft.
*R.O.W.	588,731 Sq. Ft.
Parking Areas	52,880 Sq. Ft.
Total Acres within 100 Year Flood	0.27 Acres
Total Acres within Wetlands	13.75 Acres
Parking (Maximum)	798 (617 MIN.)
Parking Provided	610 Spaces
Handicap Spaces Required	7 (RETAIL & OFFICE)
Handicap Spaces Provided	7 (RETAIL & OFFICE)
Loading Bays Provided	10
Required Internal Landscaping	28,714 Sq. Ft. = 14%
Provided Internal Landscaping	35,468 Sq. Ft.

*Includes Street R/W. Sewer &: Storm drainage Easements.

SITE DATA - PHASE II

Fairfield Park - Phase II

PHASE II WAS ORIGINALLY INCLUDED MX APPROVED PLANS DATED 07.15.2003. PHASE II AREA IS WHAT IS BEING PROPOSED FOR PHASE IV.

PHASE II IS NO LONGER APPLICABLE.

NOTE: DATA SHOWN IN PHASES I AND III WERE TAKEN FROM A MASTER PLAN PREPARED BY OTHERS AND HAVE NOT BEEN INDEPENDENTLY VERIFIED AT THIS TIME.

SITE DATA - PHASE III

Fairfield Park - PHASE III - CHRIST COMMUNITY CHURCH	
Current Zoning	MX
Tract Size (Phase III)	358.063 Sq. Ft. (8.22 Acres)
Existing Building Square Feet	19,150 Sq. Ft.
Future Church Construction	
Future Classrooms	14,400 Sq. Ft.
Future Sanctuary	12,700 Sq. Ft.
Future Family Life center	16,640 Sq. Ft.
Future Chapel	2,100 Sq. Ft.
SF to be Developed	45,840 Sq. Ft.
SF occupied by Structures	
All Buildings	64,990 Sq. Ft.
*R.O.W.	11,179 Sq. Ft.
Parking Areas	57,872 Sq. Ft.
Total Acres within 100 Year Flood	
Total Acres within Wetlands	0 Acres
Parking (Maximum)	134 Spaces (101 Minimum)
Parking Provided	127 Spaces
Handicap Spaces Required	6 Spaces
Handicap Spaces Provided	7 Spaces
Loading Bays Provided	NA
Required Internal Landscaping	8,102 Sq. Ft. = 14%
Provided Internal Landscaping	12,744 Sq. Ft.

*Includes Street R/W. Sewer &: Storm drainage Easements.

SITE DATA - Phase IV Sections A, B and C

Fairfield Park - PHASE IV Sections A, B AND C	
Current Zoning	MX
Tract Size (Phase IV)	539,164 Sq. Ft. (12.37 Acres)
Existing Building Square Feet	N/A
Proposed Building Square Feet	
Phase 4A Apartments	271,299 Sq. Ft.
Phase 4A Club - Public	4,889 Sq. Ft.
Phase 4B Commercial	20,000 Sq. Ft.
Phase 4C Office	41,700 Sq. Ft.
Phase 4C Commercial	20,850 Sq. Ft.
SF to be Developed	358,739 Sq. Ft.
SF Occupied by Structures	
All Buildings	358,739 Sq. Ft.
*R.O.W.	N/A
Parking Areas	11,955 Sq. Ft.
Total Acres within 100 Year Flood	0.06 Acres
Total Acres within Wetlands	0.00 Acres
Parking (Maximum)	1,126 Spaces (907 Minimum)
Parking Provided	± 457 Spaces
Handicap Spaces Required	9 Spaces
Handicap Spaces Provided	± 12 Spaces
Loading Bays Provided	1
Required Internal Landscaping	TBD
Provided Internal Landscaping	TBD

*Includes Street R/W. Sewer &: Storm drainage Easements.

SITE DATA - OVERALL SUMMARY - PHASES I-IV

Fairfield Park - SUMMARY		
Current Zoning	MX	
Tract Size	4,171,196 Sq. Ft. (95.75 Acres)	
Existing Building Square Feet	N/A	
Proposed Building Square Feet		
Church	64,990 Sq. Ft.	7.61%
Commercial	49,250 Sq. Ft.	5.77%
Office	99,500 Sq. Ft.	11.71%
Residential	634,340 Sq. Ft.	74.33%
Club - Public	4,889 Sq. Ft.	0.57%
SF to be Developed	853,369 Sq. Ft.	
SF occupied by Structures		
All Buildings	853,369 Sq. Ft.	
*R.O.W.	± 599,910 Sq. Ft.	
Parking Areas	± 122,707 Sq. Ft.	
Total Acres within 100 Year Flood	0.33 Acres	
Total Acres within Wetlands	20.14 Acres	
Parking (Maximum)	1845 Spaces (1418 Minimum)	
Parking Provided	± 1,397 Spaces	
Handicap Spaces Required	23 Spaces	
Handicap Spaces Provided	± 24 Spaces	
Loading Bays Provided	1	
Required Internal Landscaping		
Provided Internal Landscaping		

*Includes Street R/W, Sewer and Storm drainage Easements.

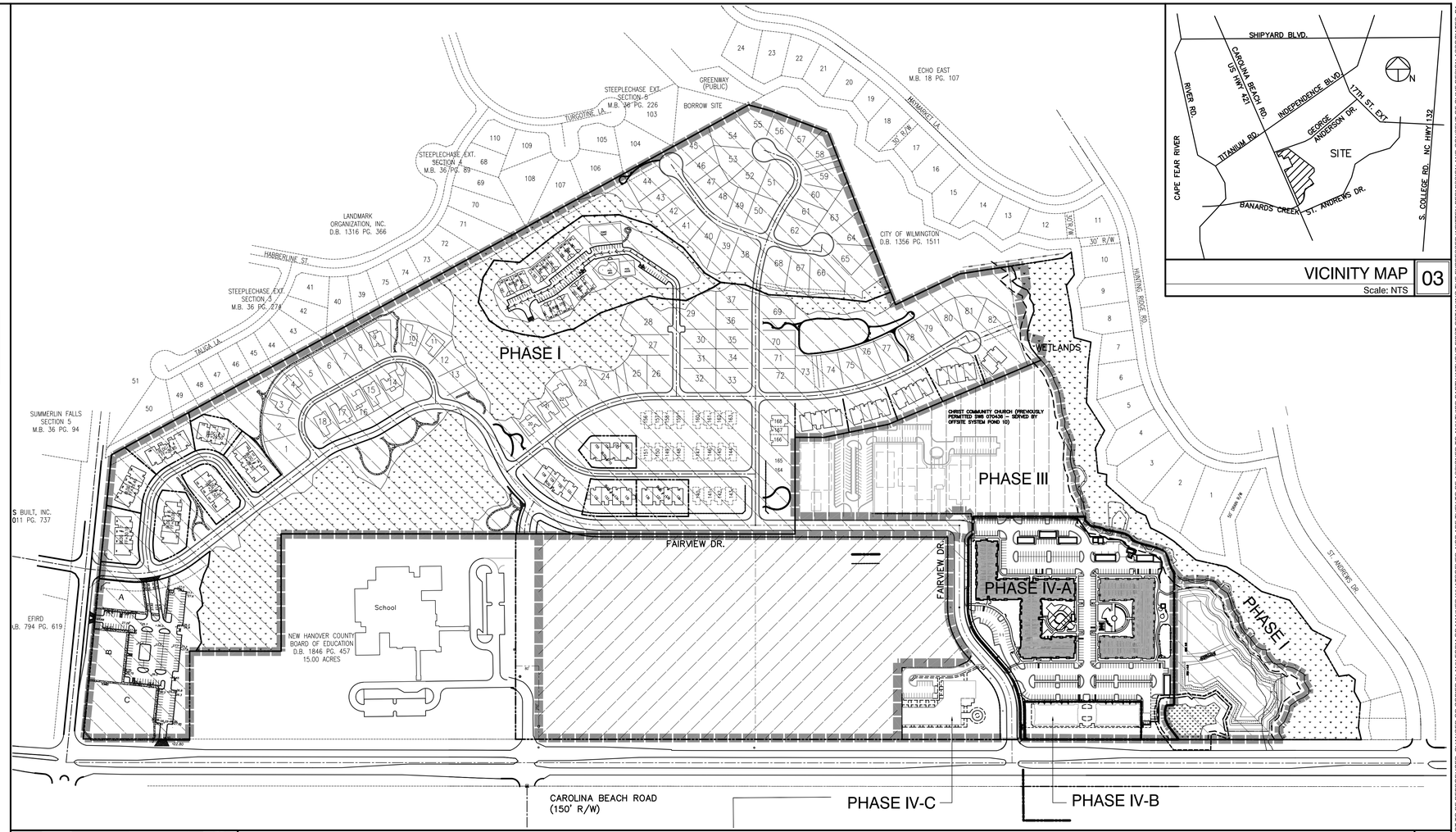

MASTER PLAN LAYOUT 02

Scale: 1" = 200'-0"

VICINITY MAP 03

Scale: NTS

PHASE I & IV OPEN SPACE/COMMON SPACE

Phase One & Four Land Area:	3,759,074 Sq. Ft.	(86.29 Acres)
Fringe Area		
Required Open Space (25%):	964,422 Sq. Ft.	(22.14 Acres)
*Provided Open Space:	867,190 Sq. Ft.	(19.90 Acres)
Required Common Space:	373,135 Sq. Ft.	(8.57 Acres)
Provided Common Space:	367,757 Sq. Ft.	(8.44 Acres)

COMMON SPACE AMENITIES

1. Sidewalks with substantial ornamental treatments (e.g. brick pavers, variety of materials, color texture, use of impervious Materials consistant with the Americans with Disabilities Act.)
2. Sidewalk Planters, and Planters with potential seating around the perimeter.
3. Public Art. (e.g. Sculpture, Fountains, Clock, Kiosk, etc.)

* Buffer "D" (see Sheet L-8) has been included as Open Space and Common Space.

BASE DENSITY (FAR)

Phases One, Three & Four Land Area:				
Land Area Type	Land Area		Base Far	Allowed Building Area
Conservation:	N/A Acres	N/A Sq. Ft.	N/A	N/A
Urban Transition:	96.18 Acres	4,189,753 Sq. Ft.	N/A	837,920 (20%)

PROPOSED DENSITY (FAR)

Phases One, Three & Four Land Area:			FAR	Proposed Building Area
Conservation:	N/A Acres	N/A Sq. Ft.	N/A	N/A
Urban Transition:	94.52 Acres	4,117,137 Sq. Ft.	19.8%	853,370

MASTER PLAN SITE DATA 05

1. ALL CONSTRUCTION SHALL BE PERFORMED IN ACCORDANCE WITH THE CURRENT CITY OF WILMINGTON AND THE STATE OF NORTH CAROLINA STANDARDS.
2. PRIOR TO ANY CLEARING, GRADING OR CONSTRUCTION ACTIVITY, TREE PROTECTION FENCING WILL BE INSTALLED AROUND PROTECTED TREES OR GROVES OF TREES AND NO CONSTRUCTION WORKERS, TOOLS, MATERIALS, OR VEHICLES ARE PERMITTED WITHIN THE TREE PROTECTION FENCING.
3. ALL PAVEMENT MARKINGS IN PUBLIC RIGHTS-OF-WAY AND FOR DRIVEWAYS ARE TO BE THERMOPLASTIC AND MEET CITY AND/OR NCDOT STANDARDS.
4. IT SHALL BE THE RESPONSIBILITY OF THE SUBDIVIDER TO ERECT OFFICIAL STREET NAME SIGNS AT ALL INTERSECTIONS ASSOCIATED WITH THE SUBDIVISION IN ACCORDANCE WITH THE TECHNICAL STANDARDS AND SEPECIFICATIONS MANUAL. THE SUBDIVIDER MAY ACQUIRE AND ERECT OFFICAL STREET NAME SIGNS OR MAY CHOOSE TO CONTRACT WITH THE CITY TO INSTALL THE STREET SIGNS AND THE SUBDIVIDER SHALL PAY THE COST OF SUCH INSTALLATION. CONTACT TRAFFIC ENGINEERING AT 910-341-7888 TO DISCUSS INSTALLATION OF TRAFFIC AND STREET NAME SIGNS. PROPOSED STREET NAMES MUST BE APPROVED PRIOR TO INSTALLATION OF STREET NAME SIGNS.
5. TRAFFIC CONTROL DEVICES (INCLUDING SIGNS AND PAVEMENT MARKINGS) IN AREAS OPEN TO PUBLIC ARE TO MET MUTCD (MANUAL ON UNIFORM TRAFFIC CONTROL DEVICES STANDARDS.
6. CONTACT TRAFFIC ENGINEERING AT 910-341-7888 TO ENSURE THAT ALL TRAFFIC SIGNAL FACILITIES AND EQUIPMENT ARE SHOWN ON THE PLAN. CONTACT TRAFFIC ENGINEERING AT 910-341-7888 FORTY-EIGHT HOURS PRIOR TO ANY EXCAVATION IN THE RIGHT-OF-WAY.
7. ANY BROKEN OR MISSING SIDEWALK PANELS, DRIVEWAY PANELS AND CURBING WILL BE REPLACED.
8. CONTACT KAREN DIXON AT 343-7888 AT THE CITY OF WILMINGTON TO DISCUSS STREET LIGHTING OPTIONS.
9. PROJECT SHALL COMPLY WITH CITY OF WILMINGTON CROSS CONTROL REQUIREMENTS. WATER METER(S) CANNOT BE RELEASED UNTIL ALL REQUIREMENTS ARE MET AND THE STATE HAS GIVEN THEIR FINAL APPROVAL. CALL 343-3910 FOR INFORMATION.
10. IF THE CONTRACTOR DESIRES CITY WATER FOR CONSTRUCTION HE SHALL APPLY IN ADVANCE FOR THIS SERVICE AND MUST PROVIDE A REDUCED PRESSURE ZONE (RPZ) BACKFLOW PREVENTION DEVICE ON THE DEVELOPER'S SIDE OF THE WATER METER BOX.
11. ANY IRRIGATION SYSTEM SUPPLIED BY CITY WATER SHALL COMPLY WITH THE CITY'S CROSS CONNECTION CONTROL REGULATIONS. CALL 343-3910 FOR INFORMATION.
12. ANY BACKFLOW PREVENTION DEVICES REQUIRED BY THE CITY WILL NEED TO BE ON THE LIST OF APPROVED DEVICES BY USCFCCCHR OR ASSE.
13. REFER TO LANDSCAPING PLAN FOR LOCATION OF STREET TREES AND ADDITIONAL NOTES.
14. CONTACT THE NORTH CAROLINA ONE CALL CENTER PRIOR TO DOING ANY DIGGING. 1-800-632-4949.
15. THE BELLSOUTH CONTACT IS STEVE DAYVAULT HE IS THE BUILDING INDUSTRY CONSULTANT (910) 392-8712. PLEASE CONTACT HIM PRIOR TO STARTING THE PROJECT IN ORDER TO FACILITATE GOOD COMMUNICATION AND MAXIMUM FLEXIBILITY.
16. THE PROCESS FOR TELEPHONE CABLE PLACEMENT:
    - FINAL GRADE WILL NEED TO BE ESTABLISHED.
    - POWER WILL PLACE THEIR CABLE FIRST-THEY GO IN AT ABOUT 3 FT DEEP.
    - BELLSOUTH/CABLE TV WILL THEN PLACE THEIR CABLE AT APPROX. 2 FT DEEP.
17. ALL FEDERAL, STATE AND LOCAL PERMITS ARE REQUIRED PRIOR TO FULL CONSTRUCTION RELEASE. THIS INCLUDES, BUT NOT LIMITED TO: STATE STORM WATER, STATE UTILITY EXTENSION PERMITS, WETLAN DISTURBANCE PERMITS, CITY STORM WATER, TREE PROTECTION PERMITS, ETC.
18. ALL PHASE 1 AND 2 INFORMATION APPROVED BY CITY OF WILMINGTON; SUBMITTED 03.06.2003 AND APPROVED 07.15.2003.
19. ALL PHASE 3 INFORMATION APPROVED BY CITY OF WILMINGTON; SUBMITTED 12.08.2006 AND TRC REVIEW 01.04.2007. PHASE 3 NOT APPROVED. INFORMATION PROVIDED BY TRIPP ENGINEERING DATED 11.08.2007.
20. ADMINISTRATIVE VARIANCE REQUEST FOR 31 PARKING SPACES IN EXCESS OF 500' FROM PUBLIC RIGHT OF WAY. REQUEST DOCUMENTATION ON FILE WITH CITY OF WILMINGTON IN CONJUNCTION WITH THIS SUBMITTAL.
21. DIMENSIONS ARE FROM BACK OF CURB UNLESS OTHERWISE NOTED.
22. ALL TRAFFIC CONTROL SIGNS AND MARKINGS OFF THE RIGHT-OF-WAY ARE TO BE MAINTAINED BY THE PROPERTY OWNER IN ACCORDANCE WITH MUTCD STANDARDS.
23. ALL PARKING STALL MARKINGS AND LANE ARROWS WITHIN THE PARKING AREAS SHALL BE WHITE.
24. A UTILITY CUT PERMIT IS REQUIRED FOR EACH OPEN CUT OF A CITY STREET. CONTACT 910.341.5888 FOR MORE DETAILS.
25. INSTALL REFLECTORS PER CITY AND NCDOT STANDARDS. TRAFFIC ENGINEERING MUST APPROVE OF PAVEMENT MARKING LAYOUT PRIOR TO ACTUAL STRIPING.
26. CONTACT TRAFFIC ENGINEERING AT 910,341,7888 FORTY EIGHT HOURS PRIOR TO ANY EXCAVATION IN THE RIGHT OF WAY.
27. CONTACT TRAFFIC ENGINEERING AT 910,341,7888 FORTY EIGHT HOURS PRIOR TO ANY EXCAVATION IN THE RIGHT OF WAY TO ENSURE THAT ALL TRAFFIC FACILITIES AND EQUIPMENT ARE PROPERLY LOCATED.
28. IMMEDIATELY NOTIFY CITY OF WILMINGTON TRAFFIC ENGINEERING AT 910,341,7888 IF ANY TRAFFIC SIGNAL FACILITIES OR CITY OWNED STREETLIGHT FACILITIES ARE DAMAGED.
29. DAMAGED FACILITIES SHALL BE REPLACED, BY AN APPROVED CONTRACTOR, ACCORDING TO STANDARD NCDOT REPLACEMENT SCHEDULES AND CURRENT NCDOT DESIGN STANDARDS.
30. ALL REPAIR/REPLACEMENT OF TRAFFIC SIGNAL INFRASTRUCTURE SHALL BE COORDINATED WITH THE CITY OF WILMINGTON TRAFFIC ENGINEERING DIVISION.

GENERAL NOTES 04

Approved Construction Plan

	Name	Date
Planning		
Public Utilities		
Traffic		
Fire		

STORMWATER MANAGEMENT PLAN
APPROVED
CITY OF WILMINGTON
ENGINEERING DEPARTMENT
DATE _____ PERMIT # _____
SIGNED_____

For each open utility cut of City streets, a $325 permit shall be required from the City prior to occupancy and/or project acceptance.

CITY OF WILMINGTON APPROVALS 01

CLINE DESIGN

125 N. Harrington St.
Raleigh, NC 27603
919/833-6413
919/836-1280 FAX
ClineDesignAssoc.com

Meridian at Fairfield Park, LLC.
Fairfield Park
4625 & 4544 Fairview Drive
Wilmington, North Carolina

Full Building Set

CLINE DESIGN ASSOCIATES, PA
LANDSCAPE ARCHITECTURAL CONSULTING
C-143
RALEIGH, NC

REGISTERED LANDSCAPE ARCHITECT
No. 395
MICHAEL LATTNER
5-23-14

PROJECT: 013060
DATE: 03.19.2014

REVISIONS:	DATE
Comments	04-23-2014
Comments	05.20.2014

DRAWN BY: CT
CHECKED BY: MWL

MASTER PLAN

SD1.00

© 2013 CLINE DESIGN ASSOCIATES, PA EXPRESSLY RESERVES ITS COMMON LAW COPYRIGHT AND OTHER PROPERTY RIGHTS IN THESE PLANS. THESE PLANS ARE NOT TO BE REPRODUCED, CHANGED OR COPIED IN ANY FORM OR MANNER WHATSOEVER, NOR ARE THEY TO BE ASSIGNED TO ANY THIRD PARTY WITHOUT FIRST OBTAINING THE EXPRESSED WRITTEN PERMISSION AND CONSENT OF CLINE DESIGN ASSOCIATES, PA.

May 21, 2014 - 2:57pm, User: P:\13Proj\013060\dwg\4_DEVELOP_Drawings\01_Sheets\013060-SD1.00_Master.dwg

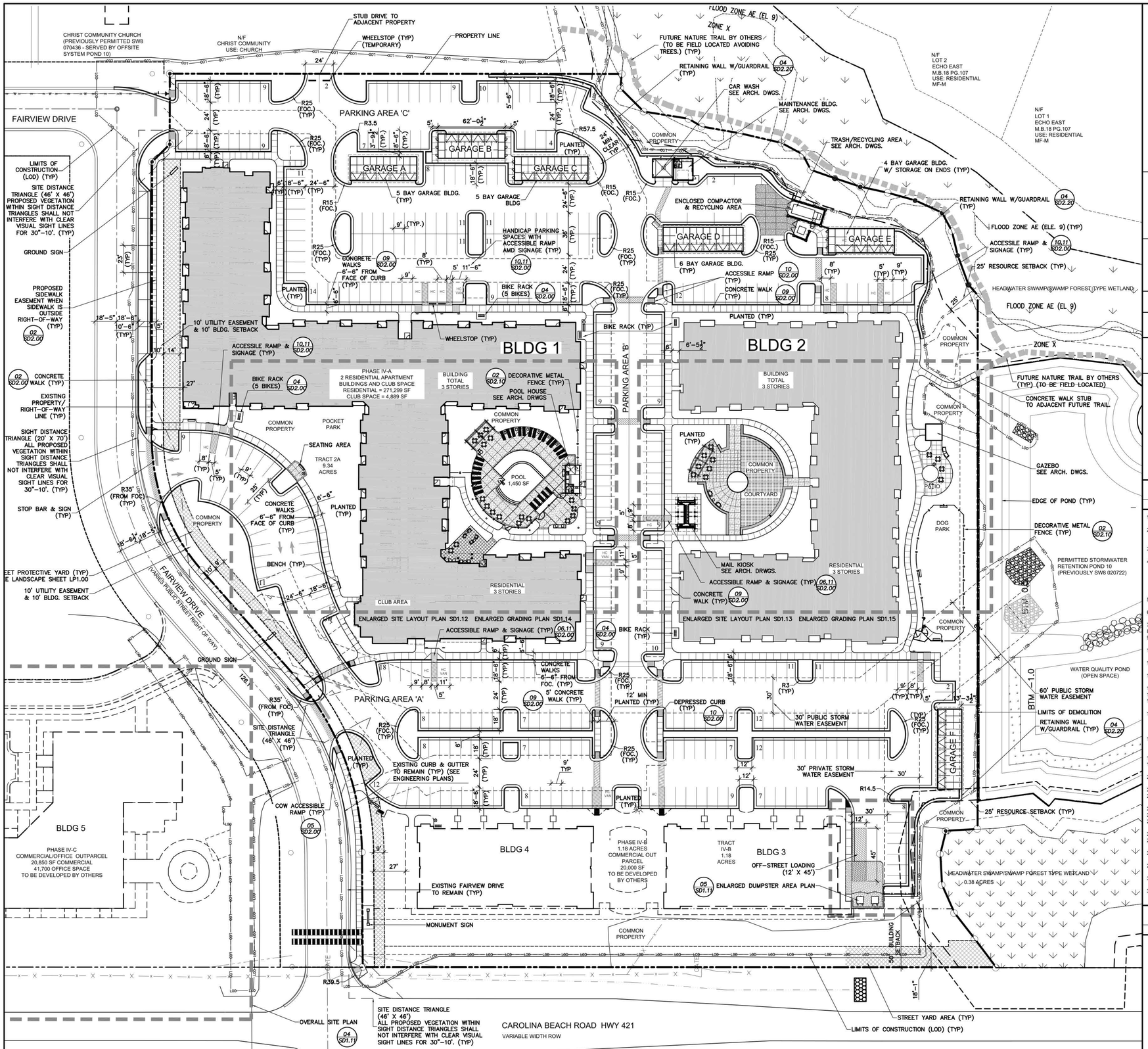

OVERALL SITE PLAN 05

Scale: 1" = 40'

OWNER/DEVELOPER	MERIDIAN AT FAIRFIELD PARK, LLC
CONTACT	MARK BARKER
ADDRESS	6131 FALLS OF NEUSE ROAD RALEIGH, NC 27609
PIN NUMBER	TRACT 2 - R07000-003-203-000 TRACT 3 - R07000-003-204-000
CURRENT ZONING	MX
TRACT SIZE TOTAL	12.37 AC. (539,164 SF.)
TRACT IV-A&B	10.49 AC. (457,092 SF.)
TRACT IV-C (PORTION OF)	1.89 AC. (82,072 SF.)
EXISTING BUILDING SF	0
PROPOSED BUILDING SF	276,188 SF. (APARTMENT & CLUB)
ACRES TO BE DEVELOPED	12.37 ACRES (539,164)
BUILDING LOT COVERAGE	22% (102,792/457,092)
ACRES OCCUPIED BY STRUCTURES	2.35 AC.
ACRES WITHIN 100 YEAR FLOOD	2.722 SF.
ACRES WITHIN WETLANDS	0
REQUIRED OPEN SPACE	145,930 SF/ 3.35 AC
PROPOSED OPEN SPACE	0.66 AC (28,749 SF.)
REQUIRED COMMON PROPERTY	1.04 AC (10% OF 10.49 AC)
PROPOSED COMMON PROPERTY	2.88 AC (125,453 SF.)
PROPOSED OVERALL OPEN SPACE	24.60 AC (1,071,719 SF.)
CAMA CLASSIFICATION	URBAN TRANSITION & CONSERVATION

PARKING ALLOWED	MINIMUM	MAXIMUM
RESIDENTIAL-ONE BEDROOM	(1.5 SPACES/UNITx136) = 204	(2.5 SPACES/UNITx136) = 340
RESIDENTIAL-TWO BEDROOM	(2.0 SPACES/UNITx 97) = 194	(2.5 SPACES/UNITx 97) = 243
RESIDENTIAL-THREE BEDROOM	(2.25 SPACES/UNITx 8) = 18	(2.5 SPACES/UNITx 8) = 20
COMMERCIAL	(40,850 SF @ 1/400 SF) = 103	(40,850 SF @ 1/200 SF) = 205
OFFICE	(41,700 SF @ 1/300 SF) = 139	(41,700 SF @ 1/200 SF) = 209
CLUB AREA	(4,889 SF @ 1/400 SF) = 13	(4,889 SF @ 1/250 SF) = 20
POOL	(1,400 SF @ 1/400 SF) = 4	(1,400 SF @ 1/200 SF) = 7
	TOTAL 675	TOTAL 1,044

PROPOSED PARKING TOTAL	457 SPACES
TRACT IV-A&B	440 SPACES
TRACT IV-C	17 SPACES
REQUIRED ACCESSIBLE PARKING SPACES	9
PROPOSED ACCESSIBLE PARKING SPACES	12
REQUIRED BICYCLE PARKING	26 SPACES
PROVIDED BICYCLE PARKING	26 SPACES
REQUIRED INTERNAL LANDSCAPING	13,030 SF
PROPOSED INTERNAL LANDSCAPING	17,275 SF

TREE SURVEY
SEE SHEET SD0.12 FOR DETAILED INFORMATION.

RESIDENTIAL UNITS	241
ONE BEDROOM	136
TWO BEDROOM	97
THREE BEDROOM	8

IMPERVIOUS SURFACE	
PRE-CONSTRUCTION	0 SF (0 %)
POST-CONSTRUCTION	267,892 SF (55%)
BASE DENSITY ALLOWED (FAR) (PHASE I,III,IV)	
CONSERVATION	N/A
URBAN	837,920 SF (20%)
PROPOSED DENSITY (FAR) (PHASE I,III,IV)	
CONSERVATION	N/A
URBAN	853,370 SF
PROPOSED DENSITY (FAR) (PHASE I,III,IV)	
OFFICE/COMMERCIAL AREA	149,150 SF
TOWNHOUSE RESIDENTIAL	189,828 SF
SINGLE FAMILY RESIDENTIAL	173,213 SF
APARTMENTS RESIDENTIAL	271,299 SF
COLLECTOR STREETS	393,782 SF
CHURCH	64,990 SF
CLUB	4,889 SF
TOTAL	853,369 SF

RESIDENTIAL SF	271,299 SF
COMMERCIAL	20,000 SF
OFFICE (TRACT IV-C)	20,850 SF
MIXED USE BLDG (TRACT IV-C)	20,850 SF
CLUB AREA	4,889 SF
NUMBER OF BUILDINGS	2
NUMBER OF GARAGE BUILDINGS	6
MAINTENANCE/CAR CARE BLDG.	1
POOL BUILDING	1
AVERAGE BUILDING HEIGHT	39' AVERAGE
NUMBER OF STORIES	
FRONT TWO COMMERCIAL BLDGS.	1 STORY
RESIDENTAIL BLDGS	3 STORIES

BUILDING	TOTAL SF	SF/FLOOR	USE
BUILDING 1	168,758	FIRST= 56,036 SECOND = 56,361 THIRD = 56,361	RESIDENTIAL RESIDENTIAL RESIDENTIAL
BUILDING 2	107,430	FIRST= 35,810 SECOND= 35,810 THIRD= 35,810	RESIDENTIAL RESIDENTIAL RESIDENTIAL
BUILDING 3	10,000	10,000	COMMERCIAL
BUILDING 4	10,000	10,000	COMMERCIAL
BUILDING 5	41,700	FIRST= 20,850 SECOND= 20,850	COMMERCIAL OFFICE

PHASE IV SITE DATA 03

1. ALL CONSTRUCTION SHALL BE PERFORMED IN ACCORDANCE WITH THE CURRENT CITY OF WILMINGTON AND THE STATE OF NORTH CAROLINA STANDARDS.
2. PRIOR TO ANY CLEARING, GRADING OR CONSTRUCTION ACTIVITY, TREE PROTECTION FENCING WILL BE INSTALLED AROUND PROTECTED TREES OR GROVES OF TREES AND NO CONSTRUCTION WORKERS, TOOLS, MATERIALS, OR VEHICLES ARE PERMITTED WITHIN THE TREE PROTECTION FENCING.
3. ALL PAVEMENT MARKINGS IN PUBLIC RIGHTS-OF-WAY AND FOR DRIVEWAYS ARE TO BE THERMOPLASTIC AND MEET CITY AND/OR NCDOT STANDARDS.
4. IT SHALL BE THE RESPONSIBILITY OF THE SUBDIVIDER TO ERECT OFFICIAL STREET NAME SIGNS AT ALL INTERSECTIONS ASSOCIATED WITH THE SUBDIVISION IN ACCORDANCE WITH THE TECHNICAL STANDARDS AND SEPECIFICATIONS MANUAL. THE SUBDIVIDER MAY ACQUIRE AND ERECT OFFICAL STREET NAME SIGNS OR MAY CHOOSE TO CONTRACT WITH THE CITY TO INSTALL THE STREET SIGNS AND THE SUBDIVIDER SHALL PAY THE COST OF SUCH INSTALLATION. CONTACT TRAFFIC ENGINEERING AT 910-341-7888 TO DISCUSS INSTALLATION OF TRAFFIC AND STREET NAME SIGNS. PROPOSED STREET NAMES MUST BE APPROVED PRIOR TO INSTALLATION OF STREET NAME SIGNS.
5. TRAFFIC CONTROL DEVICES (INCLUDING SIGNS AND PAVEMENT MARKINGS) IN AREAS OPEN TO PUBLIC ARE TO MET MUTCD (MANUAL ON UNIFORM TRAFFIC CONTROL DEVICES STANDARDS.
6. CONTACT TRAFFIC ENGINEERING AT 910-341-7888 TO ENSURE THAT ALL TRAFFIC SIGNAL FACILITIES AND EQUIPMENT ARE SHOWN ON THE PLAN. CONTACT TRAFFIC ENGINEERING AT 910-341-7888 FORTY-EIGHT HOURS PRIOR TO ANY EXCAVATION IN THE RIGHT-OF-WAY.
7. ANY BROKEN OR MISSING SIDEWALK PANELS, DRIVEWAY PANELS AND CURBING WILL BE REPLACED.
8. CONTACT KAREN DIXON AT 343-7888 AT THE CITY OF WILMINGTON TO DISCUSS STREET LIGHTING OPTIONS.
9. PROJECT SHALL COMPLY WITH CITY OF WILMINGTON CROSS CONTROL REQUIREMENTS. WATER METER(S) CANNOT BE RELEASED UNTIL ALL REQUIREMENTS ARE MET AND THE STATE HAS GIVEN THEIR FINAL APPROVAL. CALL 343-3910 FOR INFORMATION.
10. IF THE CONTRACTOR DESIRES CITY WATER FOR CONSTRUCTION HE SHALL APPLY IN ADVANCE FOR THIS SERVICE AND MUST PROVIDE A REDUCED PRESSURE ZONE (RPZ) BACKFLOW PREVENTION DEVICE ON THE DEVELOPER'S SIDE OF THE WATER METER BOX.
11. ANY IRRIGATION SYSTEM SUPPLIED BY CITY WATER SHALL COMPLY WITH THE CITY'S CROSS CONNECTION CONTROL REGULATIONS. CALL 343-3910 FOR INFORMATION.
12. ANY BACKFLOW PREVENTION DEVICES REQUIRED BY THE CITY WILL NEED TO BE ON THE LIST OF APPROVED DEVICES BY USCFCCCHR OR ASSE.
13. REFER TO LANDSCAPING PLAN FOR LOCATION OF STREET TREES AND ADDITIONAL NOTES.
14. CONTACT THE NORTH CAROLINA ONE CALL CENTER PRIOR TO DOING ANY DIGGING. 1-800-632-4949.
15. THE BELLSOUTH CONTACT IS STEVE DAYVAULT HE IS THE BUILDING INDUSTRY CONSULTANT (910) 392-8712. PLEASE CONTACT HIM PRIOR TO STARTING THE PROJECT IN ORDER TO FACILITATE GOOD COMMUNICATION AND MAXIMUM FLEXIBILITY.
16. THE PROCESS FOR TELEPHONE CABLE PLACEMENT:
    - FINAL GRADE WILL NEED TO BE ESTABLISHED.
    - POWER WILL PLACE THEIR CABLE FIRST-THEY GO IN AT ABOUT 3 FT DEEP.
    - BELLSOUTH/CABLE TV WILL THEN PLACE THEIR CABLE AT APPROX. 2 FT DEEP.
17. ALL FEDERAL, STATE AND LOCAL PERMITS ARE REQUIRED PRIOR TO FULL CONSTRUCTION RELEASE. THIS INCLUDES, BUT NOT LIMITED TO: STATE STORM WATER, STATE UTILITY EXTENSION PERMITS, WETLAN DISTURBANCE PERMITS, CITY STORM WATER, TREE PROTECTION PERMITS, ETC.
18. ALL PHASE 1 AND 2 INFORMATION APPROVED BY CITY OF WILMINGTON; SUBMITTED 03.06.2003 AND APPROVED 07.15.2003.
19. ALL PHASE 3 INFORMATION APPROVED BY CITY OF WILMINGTON; SUBMITTED 12.08.2006 AND TRC REVIEW 01.04.2007. PHASE 3 NOT APPROVED. INFORMATION PROVIDED BY TRIPP ENGINEERING DATED 11.08.2007.
20. ADMINISTRATIVE VARIANCE REQUEST FOR 31 PARKING SPACES IN EXCESS OF 500' FROM PUBLIC RIGHT OF WAY. REQUEST DOCUMENTATION ON FILE WITH CITY OF WILMINGTON IN CONJUNCTION WITH THIS SUBMITTAL.
21. DIMENSIONS ARE FROM BACK OF CURB UNLESS OTHERWISE NOTED.
22. ALL TRAFFIC CONTROL SIGNS AND MARKINGS OFF THE RIGHT-OF-WAY ARE TO BE MAINTAINED BY THE PROPERTY OWNER IN ACCORDANCE WITH MUTCD STANDARDS.
23. ALL PARKING STALL MARKINGS AND LANE ARROWS WITHIN THE PARKING AREAS SHALL BE WHITE.
24. A UTILITY CUT PERMIT IS REQUIRED FOR EACH OPEN CUT OF A CITY STREET. CONTACT 910.341.5888 FOR MORE DETAILS.
25. INSTALL REFLECTORS PER CITY AND NCDOT STANDARDS. TRAFFIC ENGINEERING MUST APPROVE OF PAVEMENT MARKING LAYOUT PRIOR TO ACTUAL STRIPING.
26. CONTACT TRAFFIC ENGINEERING AT 910.341.7888 FORTY EIGHT HOURS PRIOR TO ANY EXCAVATION IN THE RIGHT OF WAY.
27. CONTACT TRAFFIC ENGINEERING AT 910.341.7888 FORTY EIGHT HOURS PRIOR TO ANY EXCAVATION IN THE RIGHT OF WAY TO ENSURE THAT ALL TRAFFIC FACILITIES AND EQUIPMENT ARE PROPERLY LOCATED.
28. IMMEDIATELY NOTIFY CITY OF WILMINGTON TRAFFIC ENGINEERING AT 910.341.7888 IF ANY TRAFFIC SIGNAL FACILITIES OR CITY OWNED STREETLIGHT FACILITIES ARE DAMAGED.
29. DAMAGED FACILITIES SHALL BE REPLACED, BY AN APPROVED CONTRACTOR, ACCORDING TO STANDARD NCDOT REPLACEMENT SCHEDULES AND CURRENT NCDOT DESIGH STANDARDS.
30. ALL REPAIR/REPLACEMENT OF TRAFFIC SIGNAL INFRASTRUCTURE SHALL BE COORDINATED WITH THE CITY OF WILMINGTON TRAFFIC ENGINEERING DIVISION.
31. A PORTION OF THE SITE IS LOCCATED IN THE CONSERVATION RESOURCE AREA AND MUST MEET ARTICLE 10, EXCEPTIONALLY DESIGNED CRITERIA

GENERAL NOTES 02

For each open utility cut of City streets, a $325 permit shall be required from the City prior to occupancy and/or project acceptance.

STORMWATER MANAGEMENT PLAN
APPROVED
CITY OF WILMINGTON
ENGINEERING DEPARTMENT
DATE _____ PERMIT # _____
SIGNED_____

Approved Construction Plan

	Name	Date
Planning		
Public Utilities		
Traffic		
Fire		

CITY OF WILMINGTON APPROVALS 01

CLINE DESIGN

125 N. Harrington St.
Raleigh, NC 27603
919/833-6413
919/836-1280 FAX
ClineDesignAssoc.com

Meridian at Fairfield Park, LLC.

Fairfield Park
4625 & 4544 Fairview Drive
Wilmington, North Carolina

Full Building Set

CLINE DESIGN ASSOCIATES, P.A. C-143 RALEIGH, NC

No. 395 MICHAEL LATTNER REGISTERED LANDSCAPE ARCHITECT NORTH CAROLINA 6-20-14

PROJECT: 013060
DATE: 03.19.2014

REVISIONS:	DATE
Comments	04-23-2014
Comments	05.20.2014

DRAWN BY: CT
CHECKED BY: MWL

OVERALL SITE PLAN

SD1.10

© 2013 CLINE DESIGN ASSOCIATES, PA EXPRESSLY RESERVES ITS COMMON LAW COPYRIGHT AND OTHER PROPERTY RIGHTS IN THESE PLANS. THESE PLANS ARE NOT TO BE REPRODUCED, CHANGED OR COPIED IN ANY FORM OR MANNER WHATSOEVER, NOR ARE THEY TO BE ASSIGNED TO ANY THIRD PARTY WITHOUT FIRST OBTAINING THE EXPRESSED WRITTEN PERMISSION AND CONSENT OF CLINE DESIGN ASSOCIATES, PA.

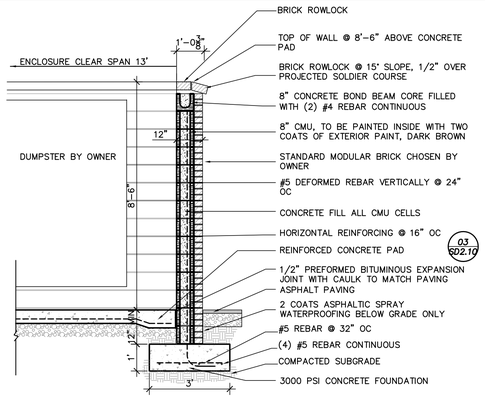

DUMPSTER WALL 07

Scale: 3/8" = 1'-0"

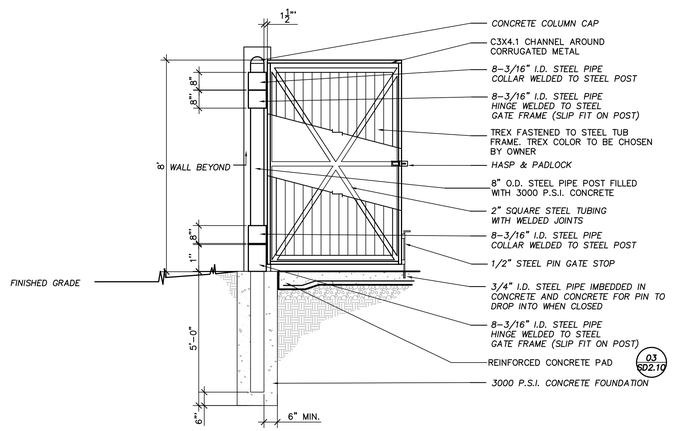

DUMPSTER GATE 06

Scale: 3/8" = 1'-0"

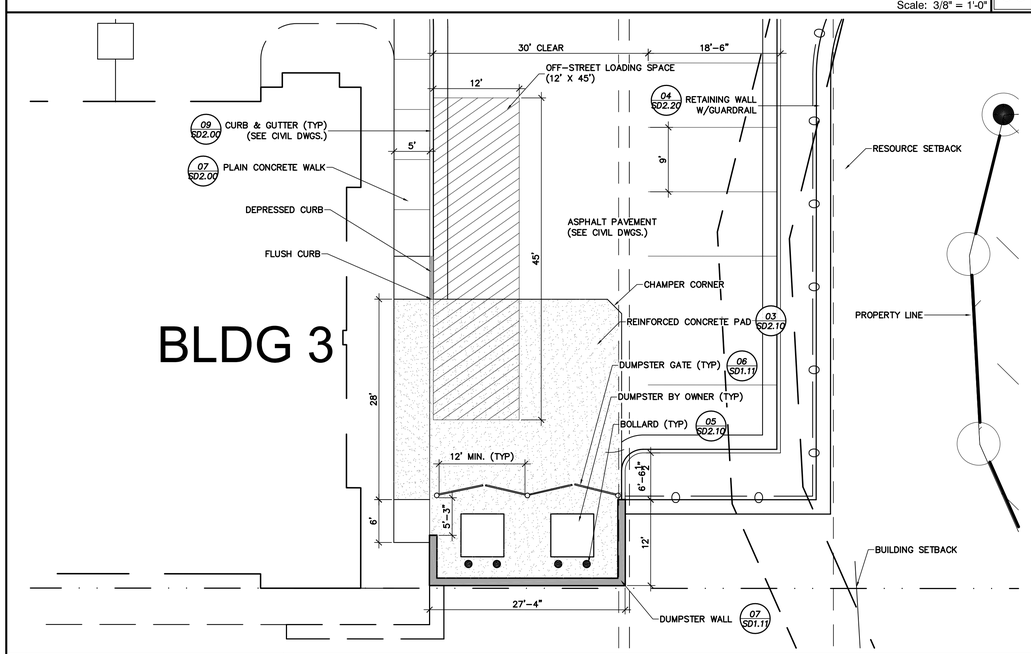

ENLARGED DUMPSTER AREA PLAN 05

Scale: 1" = 10'

40' 20' 0 40' 80'

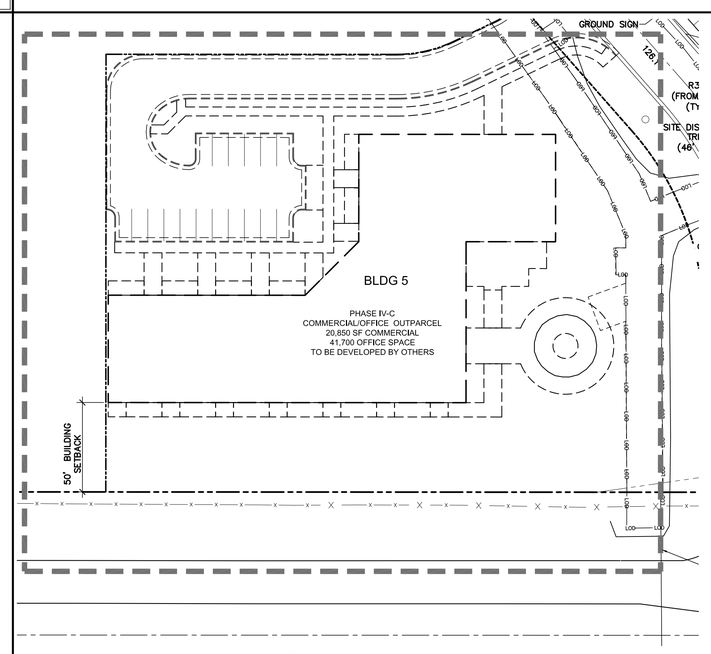

OVERALL SITE PLAN 04

Scale: 1" = 40'

40' 20' 0 40' 80'

OWNER/DEVELOPER	MERIDIAN AT FAIRFIELD PARK, LLC
CONTACT	MARK BARKER
ADDRESS	6131 FALLS OF NEUSE ROAD RALEIGH, NC 27609
PIN NUMBER	TRACT 2 - R07000-003-203-000 TRACT 3 - R07000-003-204-000
CURRENT ZONING	MX
TRACT SIZE TOTAL	12.37 AC. (539,164 SF.)
TRACT IV-A&B	10.49 AC. (457,092 SF.)
TRACT IV-C (PORTION OF)	1.89 AC. (82,072 SF.)
EXISTING BUILDING SF.	0
PROPOSED BUILDING SF.	276,188 SF. (APARTMENT & CLUB)
ACRES TO BE DEVELOPED	12.37 ACRES (539,164)
BUILDING LOT COVERAGE	22% (102,792/457,092)
ACRES OCCUPIED BY STRUCTURES	2.35 AC.
ACRES WITHIN 100 YEAR FLOOD	2.722 SF.
ACRES WITHIN WETLANDS	0
REQUIRED OPEN SPACE	145,930 SF/ 3.35 AC
PROPOSED OPEN SPACE	0.66 AC (28,749 SF.)
REQUIRED COMMON PROPERTY	1.04 AC (10% OF 10.49 AC)
PROPOSED COMMON PROPERTY	2.88 AC (125,453 SF.)
PROPOSED OVERALL OPEN SPACE	24.60 AC (1,071,719 SF.)
CAMA CLASSIFICATION	URBAN TRANSITION & CONSERVATION

	MINIMUM	MAXIMUM
PARKING ALLOWED		
RESIDENTIAL-ONE BEDROOM	(1.5 SPACES/UNIT x 136) = 204	(2.5 SPACES/UNIT x 136) = 340
RESIDENTIAL-TWO BEDROOM	(2.0 SPACES/UNIT x 97) = 194	(2.5 SPACES/UNIT x 97) = 243
RESIDENTIAL-THREE BEDROOM	(2.25 SPACES/UNIT x 8) = 18	(2.5 SPACES/UNIT x 8) = 20
COMMERCIAL	(40,850 SF @ 1/400 SF) = 103	(40,850 SF @ 1/200 SF) = 205
OFFICE	(41,700 SF @ 1/300 SF) = 139	(41,700 SF @ 1/200 SF) = 209
CLUB AREA	(4,889 SF @ 1/400 SF) = 13	(4,889 SF @ 1/250 SF) = 20
POOL	(1,400 SF @ 1/400 SF) = 4	(1,400 SF @ 1/200 SF) = 7
	TOTAL 675	TOTAL 1,044

PROPOSED PARKING TOTAL	457 SPACES
TRACT IV-A&B	440 SPACES
TRACT IV-C	17 SPACES
REQUIRED ACCESSIBLE PARKING SPACES	9
PROPOSED ACCESSIBLE PARKING SPACES	12
REQUIRED BICYCLE PARKING	26 SPACES
PROVIDED BICYCLE PARKING	26 SPACES
REQUIRED INTERNAL LANDSCAPING	13,030 SF
PROPOSED INTERNAL LANDSCAPING	17,275 SF
TREE SURVEY	SEE SHEET SD0.12 FOR DETAILED INFORMATION.
RESIDENTIAL UNITS	241
ONE BEDROOM	136
TWO BEDROOM	97
THREE BEDROOM	8

IMPERVIOUS SURFACE	
PRE-CONSTRUCTION	0 SF (0 %)
POST-CONSTRUCTION	267,892 SF (55%)
BASE DENSITY ALLOWED (FAR) (PHASE I,III,IV)	
CONSERVATION	N/A
URBAN	837,920 SF (20%)
PROPOSED DENSITY (FAR) (PHASE I,III,IV)	
CONSERVATION	N/A
URBAN	853,370 SF
PROPOSED DENSITY (FAR) (PHASE I,III,IV)	
OFFICE/COMMERCIAL AREA	149,150 SF
TOWNHOUSE RESIDENTIAL	189,828 SF
SINGLE FAMILY RESIDENTIAL	173,213 SF
APARTMENTS RESIDENTIAL	271,299 SF
COLLECTOR STREETS	393,782 SF
CHURCH	64,990 SF
CLUB	4,889 SF
TOTAL	853,369 SF

RESIDENTIAL SF	271,299 SF
COMMERCIAL	20,000 SF
OFFICE (TRACT IV-C)	20,850 SF
MIXED USE BLDG (TRACT IV-C)	20,850 SF
CLUB AREA	4,889 SF
NUMBER OF BUILDINGS	2
NUMBER OF GARAGE BUILDINGS	6
MAINTENANCE/CAR CARE BLDG.	1
POOL BUILDING	1
AVERAGE BUILDING HEIGHT	39' AVERAGE
NUMBER OF STORIES	
FRONT TWO COMMERCIAL BLDGS.	1 STORY
RESIDENTAIL BLDGS	3 STORIES

BUILDING	TOTAL SF	SF/FLOOR	USE
BUILDING 1	168,758	FIRST= 56,036 SECOND = 56,361 THIRD = 56,361	RESIDENTIAL RESIDENTIAL RESIDENTIAL
BUILDING 2	107,430	FIRST= 35,810 SECOND= 35,810 THIRD= 35,810	RESIDENTIAL RESIDENTIAL RESIDENTIAL
BUILDING 3	10,000	10,000	COMMERCIAL
BUILDING 4	10,000	10,000	COMMERCIAL
BUILDING 5	41,700	FIRST= 20,850 SECOND= 20,850	COMMERCIAL OFFICE

PHASE IV SITE DATA 03

1. ALL CONSTRUCTION SHALL BE PERFORMED IN ACCORDANCE WITH THE CURRENT CITY OF WILMINGTON AND THE STATE OF NORTH CAROLINA STANDARDS.
2. PRIOR TO ANY CLEARING, GRADING OR CONSTRUCTION ACTIVITY, TREE PROTECTION FENCING WILL BE INSTALLED AROUND PROTECTED TREES OR GROVES OF TREES AND NO CONSTRUCTION WORKERS, TOOLS, MATERIALS, OR VEHICLES ARE PERMITTED WITHIN THE TREE PROTECTION FENCING.
3. ALL PAVEMENT MARKINGS IN PUBLIC RIGHTS-OF-WAY AND FOR DRIVEWAYS ARE TO BE THERMOPLASTIC AND MEET CITY AND/OR NCDOT STANDARDS.
4. IT SHALL BE THE RESPONSIBILITY OF THE SUBDIVIDER TO ERECT OFFICIAL STREET NAME SIGNS AT ALL INTERSECTIONS ASSOCIATED WITH THE SUBDIVISION IN ACCORDANCE WITH THE TECHNICAL STANDARDS AND SEPECIFICATIONS MANUAL. THE SUBDIVIDER MAY ACQUIRE AND ERECT OFFICAL STREET NAME SIGNS OR MAY CHOOSE TO CONTRACT WITH THE CITY TO INSTALL THE STREET SIGNS AND THE SUBDIVIDER SHALL PAY THE COST OF SUCH INSTALLATION. CONTACT TRAFFIC ENGINEERING AT 910-341-7888 TO DISCUSS INSTALLATION OF TRAFFIC AND STREET NAME SIGNS. PROPOSED STREET NAMES MUST BE APPROVED PRIOR TO INSTALLATION OF STREET NAME SIGNS.
5. TRAFFIC CONTROL DEVICES (INCLUDING SIGNS AND PAVEMENT MARKINGS) IN AREAS OPEN TO PUBLIC ARE TO MET MUTCD (MANUAL ON UNIFORM TRAFFIC CONTROL DEVICES STANDARDS.
6. CONTACT TRAFFIC ENGINEERING AT 910-341-7888 TO ENSURE THAT ALL TRAFFIC SIGNAL FACILITIES AND EQUIPMENT ARE SHOWN ON THE PLAN. CONTACT TRAFFIC ENGINEERING AT 910-341-7888 FORTY-EIGHT HOURS PRIOR TO ANY EXCAVATION IN THE RIGHT-OF-WAY.
7. ANY BROKEN OR MISSING SIDEWALK PANELS, DRIVEWAY PANELS AND CURBING WILL BE REPLACED.
8. CONTACT KAREN DIXON AT 343-7888 AT THE CITY OF WILMINGTON TO DISCUSS STREET LIGHTING OPTIONS.
9. PROJECT SHALL COMPLY WITH CITY OF WILMINGTON CROSS CONTROL REQUIREMENTS. WATER METER(S) CANNOT BE RELEASED UNTIL ALL REQUIREMENTS ARE MET AND THE STATE HAS GIVEN THEIR FINAL APPROVAL. CALL 343-3910 FOR INFORMATION.
10. IF THE CONTRACTOR DESIRES CITY WATER FOR CONSTRUCTION HE SHALL APPLY IN ADVANCE FOR THIS SERVICE AND MUST PROVIDE A REDUCED PRESSURE ZONE (RPZ) BACKFLOW PREVENTION DEVICE ON THE DEVELOPER'S SIDE OF THE WATER METER BOX.
11. ANY IRRIGATION SYSTEM SUPPLIED BY CITY WATER SHALL COMPLY WITH THE CITY'S CROSS CONNECTION CONTROL REGULATIONS. CALL 343-3910 FOR INFORMATION.
12. ANY BACKFLOW PREVENTION DEVICES REQUIRED BY THE CITY WILL NEED TO BE ON THE LIST OF APPROVED DEVICES BY USCFCCCHR OR ASSE.
13. REFER TO LANDSCAPING PLAN FOR LOCATION OF STREET TREES AND ADDITIONAL NOTES.
14. CONTACT THE NORTH CAROLINA ONE CALL CENTER PRIOR TO DOING ANY DIGGING. 1-800-632-4949.
15. THE BELLSOUTH CONTACT IS STEVE DAYVAULT HE IS THE BUILDING INDUSTRY CONSULTANT (910) 392-8712. PLEASE CONTACT HIM PRIOR TO STARTING THE PROJECT IN ORDER TO FACILITATE GOOD COMMUNICATION AND MAXIMUM FLEXIBILITY.
16. THE PROCESS FOR TELEPHONE CABLE PLACEMENT:
    - FINAL GRADE WILL NEED TO BE ESTABLISHED.
    - POWER WILL PLACE THEIR CABLE FIRST-THEY GO IN AT ABOUT 3 FT DEEP.
    - BELLSOUTH/CABLE TV WILL THEN PLACE THEIR CABLE AT APPROX. 2 FT DEEP.
17. ALL FEDERAL, STATE AND LOCAL PERMITS ARE REQUIRED PRIOR TO FULL CONSTRUCTION RELEASE. THIS INCLUDES, BUT NOT LIMITED TO: STATE STORM WATER, STATE UTILITY EXTENSION PERMITS, WETLAN DISTURBANCE PERMITS, CITY STORM WATER, TREE PROTECTION PERMITS, ETC.
18. ALL PHASE 1 AND 2 INFORMATION APPROVED BY CITY OF WILMINGTON: SUBMITTED 03.06.2003 AND APPROVED 07.15.2003.
19. ALL PHASE 3 INFORMATION APPROVED BY CITY OF WILMINGTON: SUBMITTED 12.08.2006 AND TRC REVIEW 01.04.2007. PHASE 3 NOT APPROVED. INFORMATION PROVIDED BY TRIPP ENGINEERING DATED 11.08.2007.
20. ADMINISTRATIVE VARIANCE REQUEST FOR 31 PARKING SPACES IN EXCESS OF 500' FROM PUBLIC RIGHT OF WAY. REQUEST DOCUMENTATION ON FILE WITH CITY OF WILMINGTON IN CONJUNCTION WITH THIS SUBMITTAL.
21. DIMENSIONS ARE FROM BACK OF CURB UNLESS OTHERWISE NOTED.
22. ALL TRAFFIC CONTROL SIGNS AND MARKINGS OFF THE RIGHT-OF-WAY ARE TO BE MAINTAINED BY THE PROPERTY OWNER IN ACCORDANCE WITH MUTCD STANDARDS.
23. ALL PARKING STALL MARKINGS AND LANE ARROWS WITHIN THE PARKING AREAS SHALL BE WHITE.
24. A UTILITY CUT PERMIT IS REQUIRED FOR EACH OPEN CUT OF A CITY STREET. CONTACT 910.341.5888 FOR MORE DETAILS.
25. INSTALL REFLECTORS PER CITY AND NCDOT STANDARDS. TRAFFIC ENGINEERING MUST APPROVE OF PAVEMENT MARKING LAYOUT PRIOR TO ACTUAL STRIPING.
26. CONTACT TRAFFIC ENGINEERING AT 910.341.7888 FORTY EIGHT HOURS PRIOR TO ANY EXCAVATION IN THE RIGHT OF WAY.
27. CONTACT TRAFFIC ENGINEERING AT 910.341.7888 FORTY EIGHT HOURS PRIOR TO ANY EXCAVATION IN THE RIGHT OF WAY TO ENSURE THAT ALL TRAFFIC FACILITIES AND EQUIPMENT ARE PROPERLY LOCATED.
28. IMMEDIATELY NOTIFY CITY OF WILMINGTON TRAFFIC ENGINEERING AT 910.341.7888 IF ANY TRAFFIC SIGNAL FACILITIES OR CITY OWNED STREETLIGHT FACILITIES ARE DAMAGED.
29. DAMAGED FACILITIES SHALL BE REPLACED, BY AN APPROVED CONTRACTOR, ACCORDING TO STANDARD NCDOT REPLACEMENT SCHEDULES AND CURRENT NCDOT DESIGH STANDARDS.
30. ALL REPAIR/REPLACEMENT OF TRAFFIC SIGNAL INFRASTRUCTURE SHALL BE COORDINATED WITH THE CITY OF WILMINGTON TRAFFIC ENGINEERING DIVISION.
31. A PORTION OF THE SITE IS LOCCATED IN THE CONSERVATION RESOURCE AREA AND MUST MEET ARTICLE 10, EXCEPTIONALLY DESIGNED CRITERIA.

GENERAL NOTES 02

For each open utility cut of City streets, a $325 permit shall be required from the City prior to occupancy and/or project acceptance.

STORMWATER MANAGEMENT PLAN
APPROVED
CITY OF WILMINGTON
ENGINEERING DEPARTMENT
DATE _____ PERMIT # _____
SIGNED _____

Approved Construction Plan

	Name	Date
Planning		
Public Utilities		
Traffic		
Fire		

CITY OF WILMINGTON APPROVALS 01

CLINE DESIGN

125 N. Harrington St.
Raleigh, NC 27603
919/833-6413
919/836-1280 FAX
ClineDesignAssoc.com

Meridian at Fairfield Park, LLC.

Fairfield Park

4625 & 4544 Fairview Drive
Wilmington, North Carolina

Full Building Set

CLINE DESIGN ASSOCIATES, PA
C-143
RALEIGH, NC

No. 395
MICHAEL LATTNER
6-20-14

PROJECT: 013060
DATE: 03.19.2014

REVISIONS:	DATE
Comments	04-23-2014
Comments	05.20.2014

DRAWN BY: CT
CHECKED BY: MWL

OVERALL SITE PLAN

SD1.11

© 2013 CLINE DESIGN ASSOCIATES, PA EXPRESSLY RESERVES ITS COMMON LAW COPYRIGHT AND OTHER PROPERTY RIGHTS IN THESE PLANS. THESE PLANS ARE NOT TO BE REPRODUCED, CHANGED OR COPIED IN ANY FORM OR MANNER WHATSOEVER, NOR ARE THEY TO BE ASSIGNED TO ANY THIRD PARTY WITHOUT FIRST OBTAINING THE EXPRESSED WRITTEN PERMISSION AND CONSENT OF CLINE DESIGN ASSOCIATES, PA.

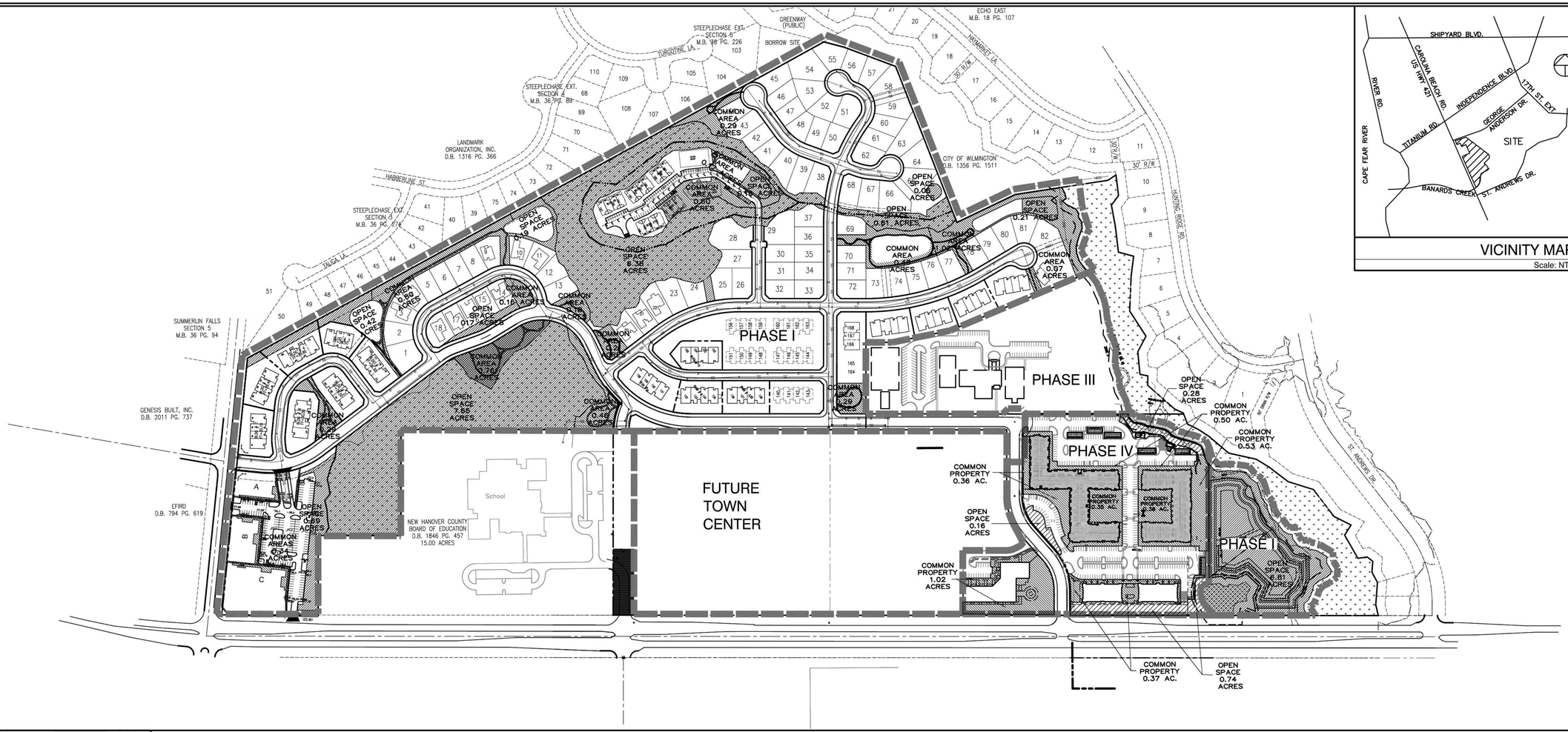

COMMON SPACE AND OPEN SPACE PLAN 02

Scale: 1" = 200'-0"

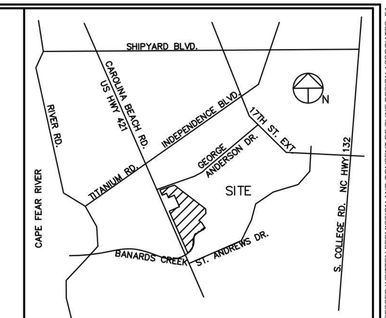

VICINITY MAP 03

Scale: NTS

PHASE I OPEN SPACE/COMMON SPACE

TOTAL AREA = 3,273,969 SF/75.16 AC

REQUIRED OPEN SPACE (25%)	818,492 SF/18.79 AC
PROVIDED OPEN SPACE	838,441 SF/19.24 AC
EXCESS OPEN SPACE	19,949 SF/0.45 AC
REQUIRED COMMON SPACE (10%)	327,397 SF/7.52 AC
PROVIDED COMMON SPACE	242,304 SF/5.56 AC
EXCESS COMMON SPACE	−85,093 SF/1.96 AC

PHASE III OPEN SPACE/COMMON SPACE

TOTAL AREA = 358,063 SF/8.22 AC

REQUIRED OPEN SPACE (25%)	89,516 SF/2.06 AC
PROVIDED OPEN SPACE	204,529 SF/4.69 AC
EXCESS OPEN SPACE	115,013 SF/2.63 AC
REQUIRED COMMON SPACE (10%)	35,806 SF/0.82 AC
PROVIDED COMMON SPACE	36,906 SF/0.85 AC
EXCESS COMMON SPACE	1,100 SF/.03 AC

PHASE IV OPEN SPACE/COMMON SPACE

TOTAL AREA = 539,164 SF/12.37 AC

REQUIRED OPEN SPACE (25%)	135,081 SF/3.10 AC
PROVIDED OPEN SPACE	51,373 SF/1.18 AC
EXCESS OPEN SPACE	−83,708 SF/−1.92 AC
REQUIRED COMMON SPACE (10%)	54,032 SF/1.24 AC
PROVIDED COMMON SPACE	153,253 SF/3.52 AC
EXCESS COMMON SPACE	99,221 SF/2.28 AC

* UNDER MX ZONING SECTION 18–185(D)(13)(f)
–OVERLAP BETWEEN SPACES CONSIDERED COMMON SPACE AND OPEN SPACE IS POSSIBLE. THE DEFINITIONS ARE NOT MUTUALLY EXCLUSIVE.
–COMMON SPACE SHALL BE PRIMARILY AREA FOR SOCIAL INTERACTION AND HAVE MORE IMPERVIOUS SURFACE.
–OPEN SPACE SHALL BE ESSENTIALLY PERVIOUS AREA WITH LIMITED MODIFICATIONS.

PHASE I, III, IV OPEN SPACE/COMMON SPACE

TOTAL AREA = 4,171,196 SF/95.75 AC

REQUIRED OPEN SPACE (25%)	1,043,089 SF/23.95 AC
PROVIDED OPEN SPACE	1,094,343 SF/25.12 AC
EXCESS OPEN SPACE	51,254 SF/ 1.18 AC
REQUIRED COMMON SPACE (10%)	417,235 SF/9.58 AC
PROVIDED COMMON SPACE	432,463 SF/9.93 AC
EXCESS COMMON SPACE	15,228 SF/0.35 AC

COMMON SPACE AMENITIES

1. Sidewalks with substantial ornamental treatments (e.g. brick pavers, variety of materials, color texture, use of Impervious Materials consistant with the Americans with Disabilities Act.)
2. Sidewalk Planters, and Planters with potential seating around the perimeter.
3. Public Art. (e.g. Sculpture, Fountains, Clock, Kiosk, etc.)

SITE DATA 04

LEGEND

- PHASE LINES
- CENTERLINE
- PROPERTY LINE
- WETLANDS
- OPEN SPACE
- COMMON PROPERTY

LEGEND 01

CLINE DESIGN

125 N. Harrington St.
Raleigh, NC 27603
919/833-6413
919/836-1280 FAX
ClineDesignAssoc.com

Meridian at Fairfield Park, LLC.

Fairfield Park

4625 & 4544 Fairview Drive
Wilmington, North Carolina

Full Building Set

CLINE DESIGN ASSOCIATES, PA LANDSCAPE ARCHITECTURE C-143 RALEIGH, NC

REGISTERED LANDSCAPE ARCHITECT No. 395 NORTH CAROLINA MICHAEL LATTNER

5-20-14

PROJECT: 013060

DATE: 03.19.2014

REVISIONS:	DATE
Comments	04-23-2014
Comments	05.20.2014

DRAWN BY:	CT
CHECKED BY:	MWL

COMMON SPACE AND OPEN SPACE PLAN

SD1.20

© 2013 CLINE DESIGN ASSOCIATES, PA EXPRESSLY RESERVES ITS COMMON LAW COPYRIGHT AND OTHER PROPERTY RIGHTS IN THESE PLANS. THESE PLANS ARE NOT TO BE REPRODUCED, CHANGED OR COPIED IN ANY FORM OR MANNER WHATSOEVER, NOR ARE THEY TO BE ASSIGNED TO ANY THIRD PARTY WITHOUT FIRST OBTAINING THE EXPRESSED WRITTEN PERMISSION AND CONSENT OF CLINE DESIGN ASSOCIATES, PA.

May 21, 2014 - 3:03pm, wrote: P:\Projects\013060\Land\1_SD\013060_SitePlan01.dwg, SitePlan01, 1:1, SitePlan01, 013060-SD-SitePlan (common space).dwg

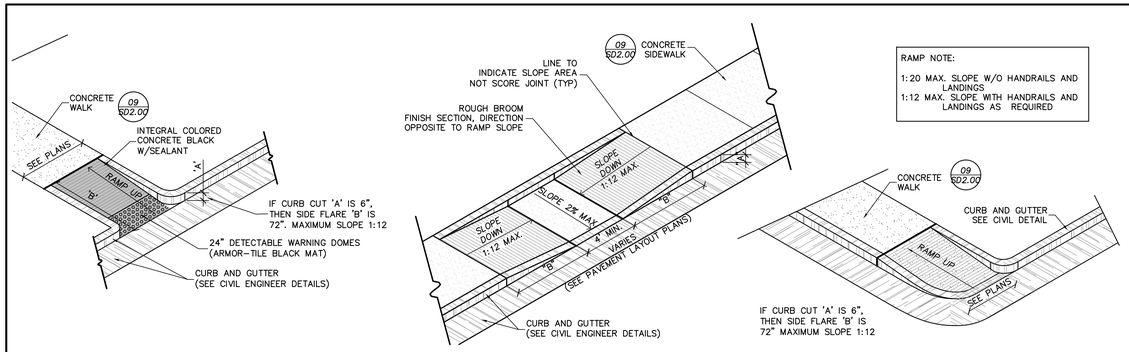

ACCESSIBLE RAMPS (INTERNAL TO PROPERTY) 10

Scale: 3/16" = 1'-0"

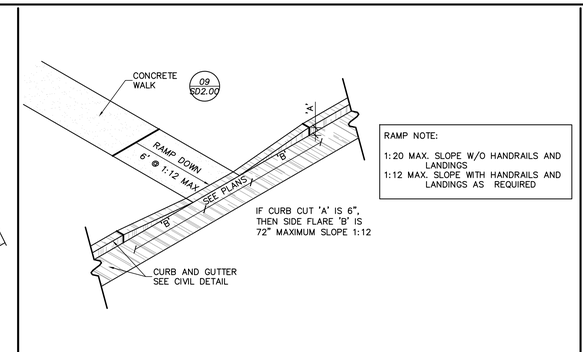

DEPRESSED CURB 07

Scale: 3/16" = 1'-0"

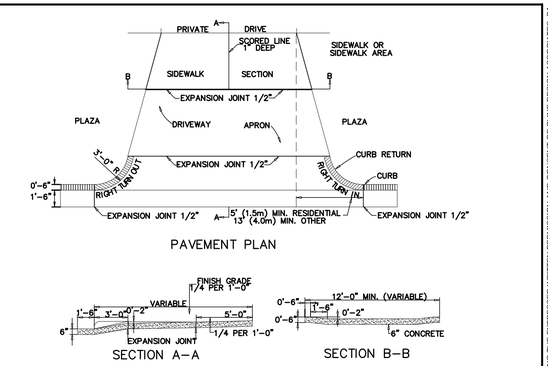

CITY OF WILMINGTON STD. DRIVE APRON 03

Scale: NTS

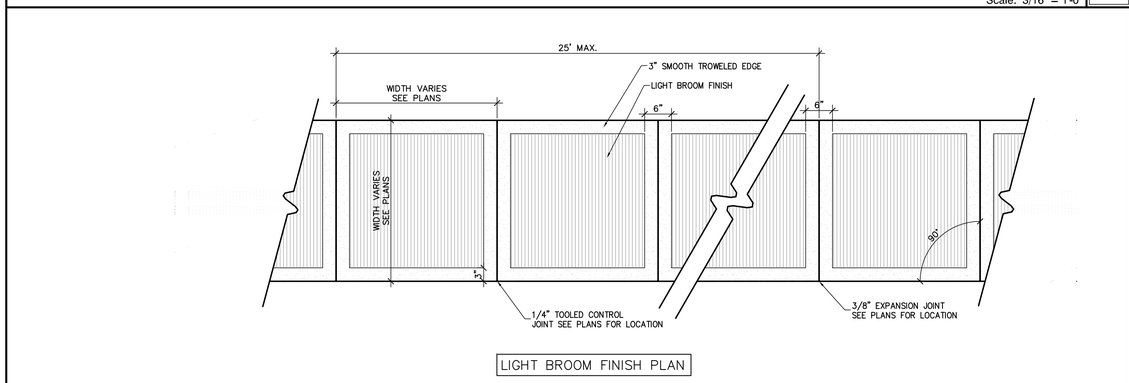

NOTES:
1) WALKS SHALL BE PLACED ON 95% STANDARD PROCTOR COMPACTED SUBGRADE.
2) CROSS SLOPE OF ALL WALKS SHALL NOT EXCEED 1/4" PER FOOT.
3) THICKNESS OF CONCRETE SHALL BE 4" , EXCEPT AT DRIVEWAYS AND PARKING SPACES WHERE IT SHALL BE THICKENED TO 6", UNLESS NOTED OTHERWISE.
4) FINISHED GRADE ADJACENT TO WALK SHALL BE 1" BELOW WALK SURFACE.
5) CONCRETE TO BE 4000 PSI @ 28 DAYS, AIR-ENTRAINED
6) ALL SIDEWALKS SHALL MEET OR EXCEED REQUIREMENTS OF MUNICIPALITY STANDARD DETAILS AND SPECIFICATIONS.
7) SUBGRADE SHALL NOT CONTAIN ORGANIC MATTER OR PLASTIC CLAYS.
8) EXPANSION JOINTS SHALL BE PLACED WHERE SIDEWALKS ABUT DRIVEWAYS, FOUNDATIONS OR OTHER CONCRETE.
9) WHERE SIDEWALK IS GREATER THAN 8' IN WIDTH, CENTERLINE JOINT TO BE CUT, NOT SCORED.
10) DISTANCE BETWEEN CONTROL JOINTS TO BE EQUALLY SPACED BETWEEN EXPANSION JOINTS; SPACING TO BE ROUGHLY EQUAL TO WIDTH OF WALK; TYP UNLESS OTHERWISE NOTED ON LAYOU

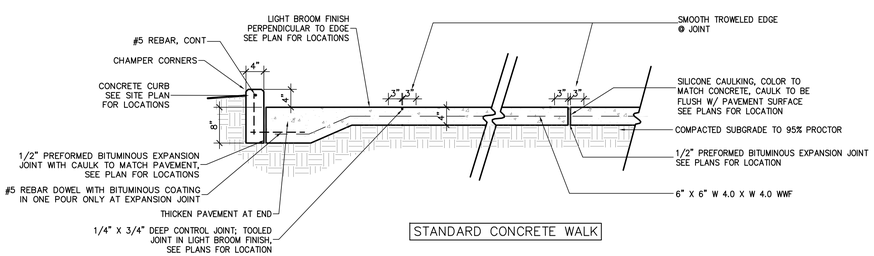

CONCRETE WALK (INTERNAL TO PROPERTY) 09

Scale: 3/4" = 1'-0"

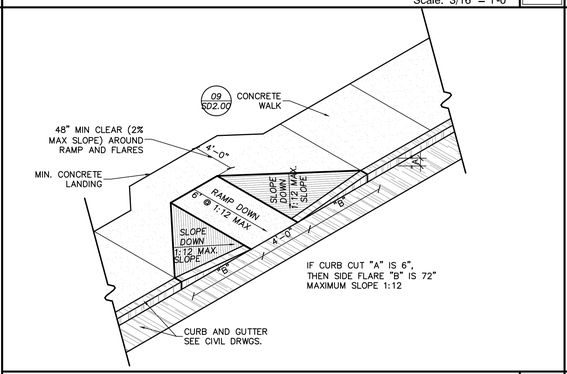

ACCESSIBLE RAMP AT PARKING 06

Scale: 3/16" = 1'-0"

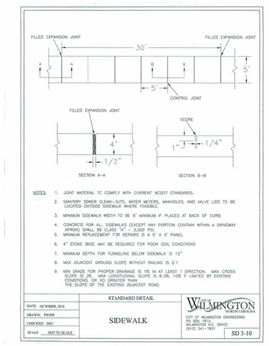

CITY OF WILMINGTON STD. CONC. WALK 02

Scale: NTS

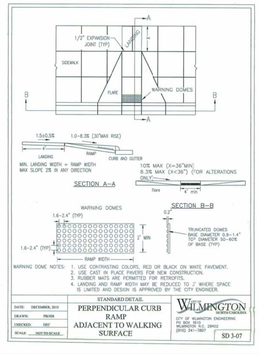

CITY OF WILMINGTON ACCESSIBLE RAMP 05

Scale: 3/16" = 1'-0"

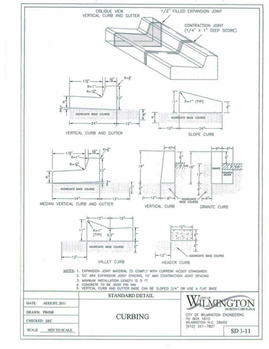

CITY OF WILMINGTON CURB TYPE "A" 01

Scale: NTS

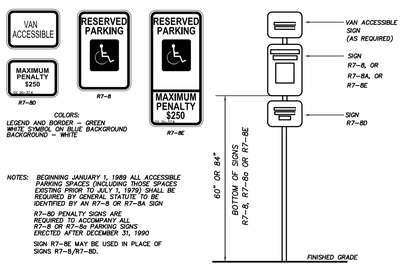

ACCESSIBLE SIGN 11

Scale: NTS

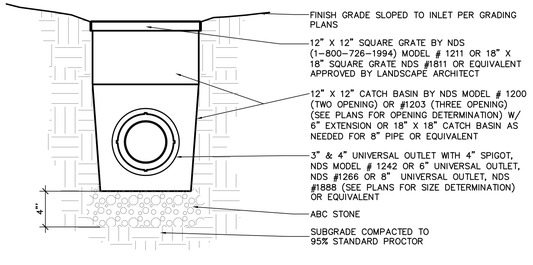

YARD INLET 08

Scale: 1-1/2" = 1'-0"

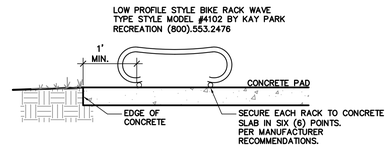

BICYCLE RACK 04

Scale: 3/4" = 1'-0"

Approved Construction Plan

	Name	Date
Planning		
Public Utilities		
Traffic		
Fire		

For each open utility cut of City streets, a $325 permit shall be required from the City prior to occupancy and/or project acceptance.

STORMWATER MANAGEMENT PLAN
APPROVED
CITY OF WILMINGTON
ENGINEERING DEPARTMENT
DATE _____ PERMIT # _____
SIGNED_____

CITY OF WILMINGTON 00

APPROVAL STAMPS

May 20, 2014 - 10:28am, P:\13Pro\013060\Land\4_DD\LDD01_Drawings\1.01_Sheets\013060-DD-SD200_(details).dwg

© 2013 CLINE DESIGN ASSOCIATES, PA EXPRESSLY RESERVES ITS COMMON LAW COPYRIGHT AND OTHER PROPERTY RIGHTS IN THESE PLANS. THESE PLANS ARE NOT TO BE REPRODUCED, CHANGED OR COPIED IN ANY FORM OR MANNER WHATSOEVER, NOR ARE THEY TO BE ASSIGNED TO ANY THIRD PARTY WITHOUT FIRST OBTAINING THE EXPRESSED WRITTEN PERMISSION AND CONSENT OF CLINE DESIGN ASSOCIATES, PA.

CLINE DESIGN
125 N. Harrington St.
Raleigh, NC 27603
919/833-6413
919/836-1280 FAX
ClineDesignAssoc.com

Meridian at Fairfield Park, LLC.
Fairfield Park
4625 & 4544 Fairview Drive
Wilmington, North Carolina

Full Building Set

CLINE DESIGN ASSOCIATES, PA ARCHITECTURE ENGINEERING C-143 RALEIGH, NC

REGISTERED ARCHITECT MICHAEL LATTNER No. 395 NORTH CAROLINA 5-20-14

PROJECT: 013060
DATE: 03.19.2014

REVISIONS:	DATE
Comments	04-23-2014
Comments	05.20.2014

DRAWN BY: CT
CHECKED BY: MWL

SITE DETAILS

SD2.00

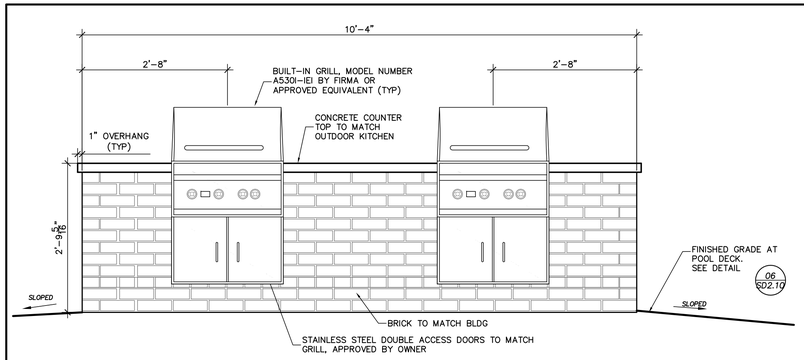

GRILL SECTION - SIDE 09

Scale: 3/4" = 1'-0"

NOTES:
- PAVEMENTS TO BE NON-SLIP STAMPED FINISH CONCRETE. CONCRETE TO BE SLOPED AWAY FROM INSIDE POOL EDGE AT 2% MIN. SLOPE.
- EXPANSION JOINTS TO BE 1/2" (AS SHOWN ON PLANS.) ALL EXPANSION JOINTS TO BE TRIMMED 1/4"-1/2" FROM FLUSH AND CAULKED (COLOR TO MATCH CONCRETE DECK.)

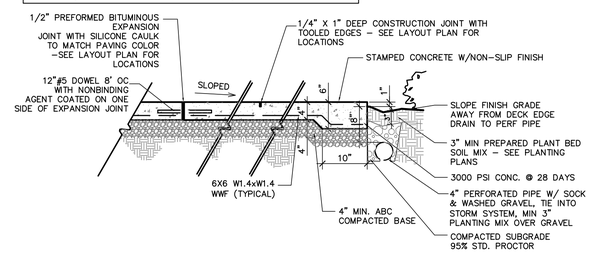

CONCRETE POOL DECK WITH DRAINAGE 06

Scale: 3/4" = 1'-0"

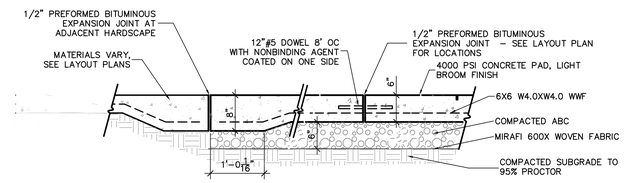

REINFORCED CONCRETE PAD 03

Scale: 3/4" = 1'-0"

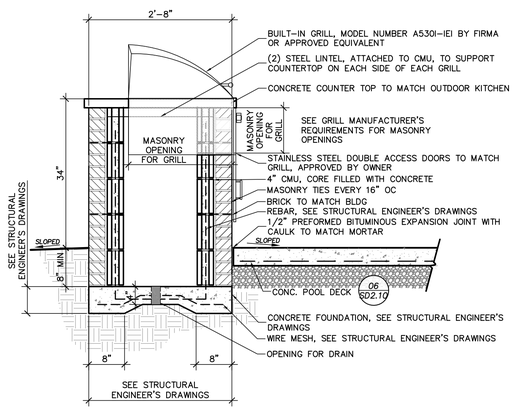

GRILL SECTION - SIDE 08

Scale: 3/4" = 1'-0"

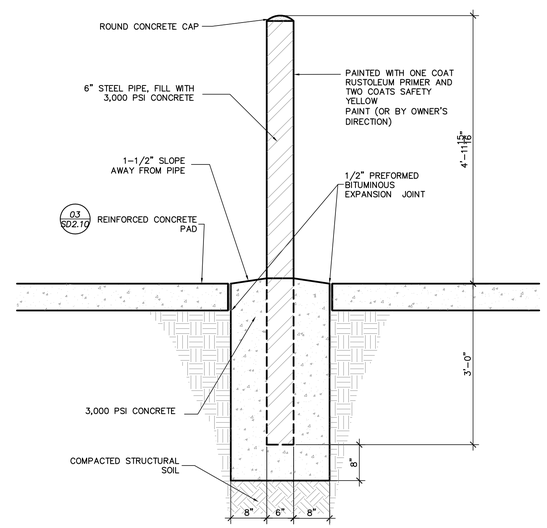

BOLLARD 05

Scale: 3/4" = 1'-0"

NOTES:
1. FENCE TO BE MONTAGE MAJESTIC 3-RAIL BY AMERISTAR FENCING PRODUCTS 1-888-333-3422, OR EQUIVALENT APPROVED BY LANDSCAPE ARCHITECT
2. SHOP DRAWINGS REQUIRED FOR ALL MATERIALS, CONNECTIONS HARDWARE, LAYOUT, ETC.
3. FENCE FINISH TO BE SMOOTH & PAINTED FLAT BLACK.
4. OPENING UNDER THE BOTTOM OF PICKETS SHALL NOT EXCEED 1.75".
5. ALL POOL FENCING TO BE 4' IN HEIGHT UNLESS OTHERWISE SPECIFIED ON PLAN
6. ALL FENCE COMPONENTS AND HARDWARE TO MEET REQUIREMENTS OF NC AND DURHAM POOL REGULATIONS

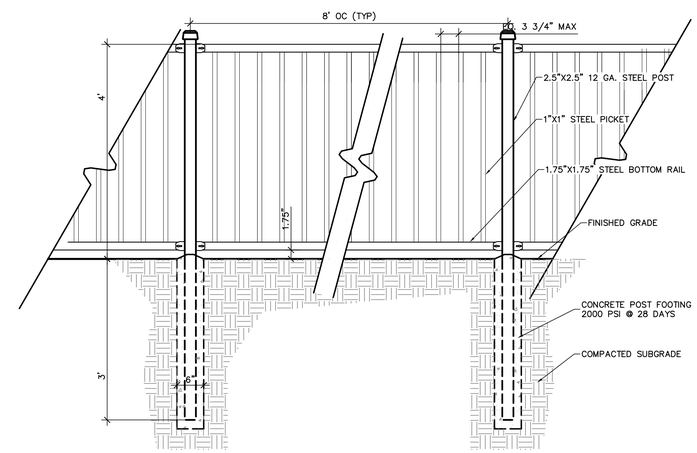

DECORATIVE METAL FENCE 02

Scale: 3/4" = 1'-0"

NOTES:
1. GUARDRAIL TO BE MONTAGE MAJESTIC 3-RAIL BY AMERISTAR FENCING PRODUCTS 1-888-333-3422, OR EQUIVALENT APPROVED BY LANDSCAPE ARCHITEC
2. SHOP DRAWINGS REQUIRED FOR ALL MATERIALS, CONNECTIONS HARDWARE, LAYOUT, ETC.
3. GUARDRAIL FINISH TO BE SMOOTH & PAINTED FLAT BLACK.
4. OPENING UNDER THE BOTTOM OF PICKETS SHALL NOT EXCEED 1.75".
5. AT WALL MOUNT LOCATIONS, POSTS TO BE CORE DRILLED AND SET INTO WALL PER MANUFACTURER'S SPECS.
6. AT NON-WALL MOUNT LOCATIONS, PICKETS TO EXTEND BEYOND BOTTOM RAIL
7. BOTTOM OPENING SHALL NOT ALLOW PASSAGE OF 2" DIA. SPHERE
8. NO OPENING SHALL ALLOW PASSAGE OF 4" DIA. SPHERE TO 42" ABOVE FINISH GRADE

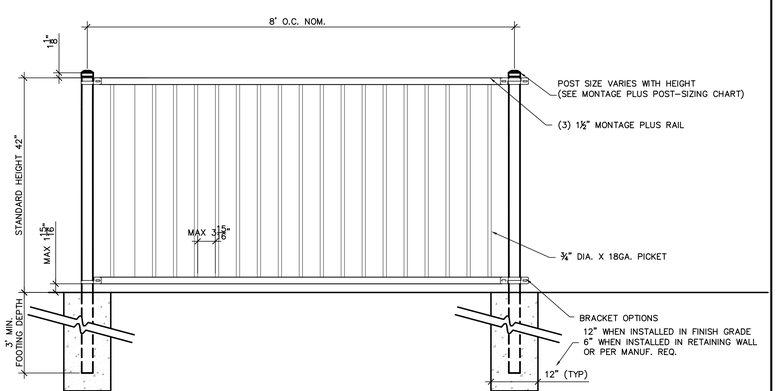

GUARDRAIL 07

Scale: 3/4" = 1'-0"

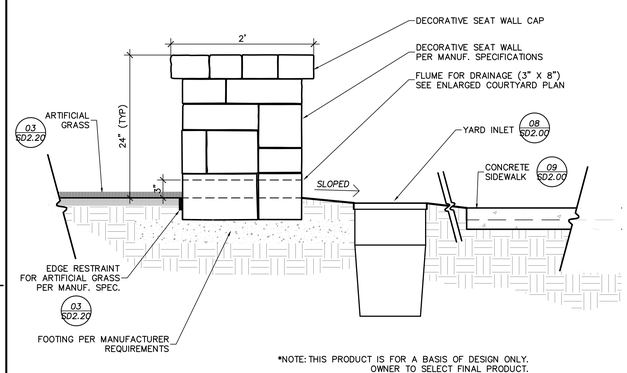

*NOTE: THIS PRODUCT IS FOR A BASIS OF DESIGN ONLY. OWNER TO SELECT FINAL PRODUCT.

DECORATIVE SEAT WALL 04

Scale: 3/4" = 1'-0"

NOTES:
1. GATE TO BE MONTAGE MAJESTIC BY AMERISTAR FENCING PRODUCTS 1-888-333-3422, OR EQUIVALENT APPROVED BY LANDSCAPE ARCHITECT.
2. ALL FENCE COMPONENTS & HARDWARE TO MEET REQUIREMENTS OF NC AND WILMINTON POOL REGULATION, INCLUDING IC SECTION 3109
3. SEE POOL FENCE NOTES.
4. LOCK & LATCH BY D & D TECHNOLOGIES.
5. CARD READER & PANIC HARDWARE BY OTHERS

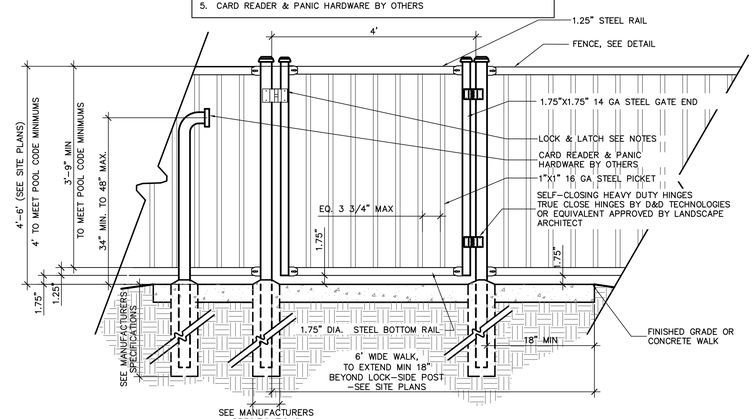

DECORATIVE METAL GATE 01

Scale: 3/4" = 1'-0"

CLINE DESIGN
125 N. Harrington St.
Raleigh, NC 27603
919/833-6413
919/836-1280 FAX
ClineDesignAssoc.com

Meridian at Fairfield Park, LLC.

Fairfield Park

4625 & 4544 Fairview Drive
Wilmington, North Carolina

Full Building Set

CLINE DESIGN ASSOCIATES, PA C-143 RALEIGH, NC

REGISTERED LANDSCAPE ARCHITECT NORTH CAROLINA No. 395 MICHAEL LATTNER 5-21-14

PROJECT: 013060

DATE: 03.19.2014

REVISIONS:	DATE
Comments	04-23-2014
Comments	05.20.2014

DRAWN BY: CT

CHECKED BY: MWL

SITE DETAILS

SD2.10

© 2013 CLINE DESIGN ASSOCIATES, PA EXPRESSLY RESERVES ITS COMMON LAW COPYRIGHT AND OTHER PROPERTY RIGHTS IN THESE PLANS. THESE PLANS ARE NOT TO BE REPRODUCED, CHANGED OR COPIED IN ANY FORM OR MANNER WHATSOEVER, NOR ARE THEY TO BE ASSIGNED TO ANY THIRD PARTY WITHOUT FIRST OBTAINING THE EXPRESSED WRITTEN PERMISSION AND CONSENT OF CLINE DESIGN ASSOCIATES, PA.

May 20, 2014 - 10:28am, P:\13Proj\013060\Land\4_DD\LDD01_Drawings\1.01_Sheets\013060-DD-SD200_(details).dwg

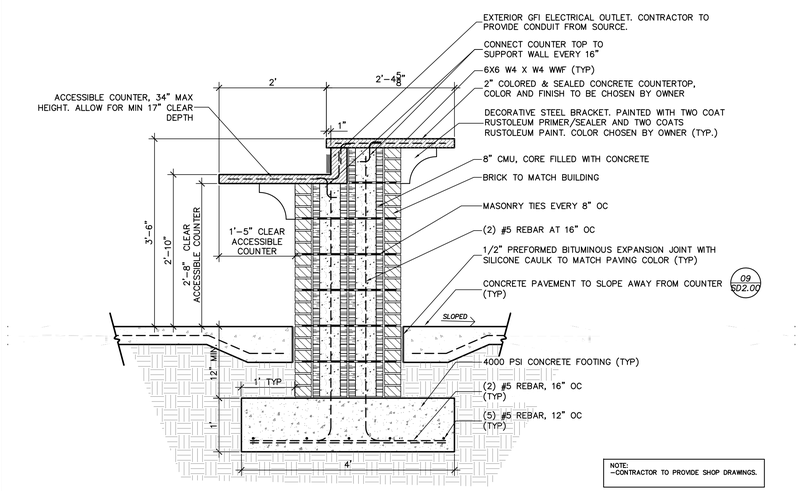

NOTE:
–CONTRACTOR TO PROVIDE SHOP DRAWINGS.

OUTDOOR BAR SECTION 08

Scale: 3/4" = 1'-0"

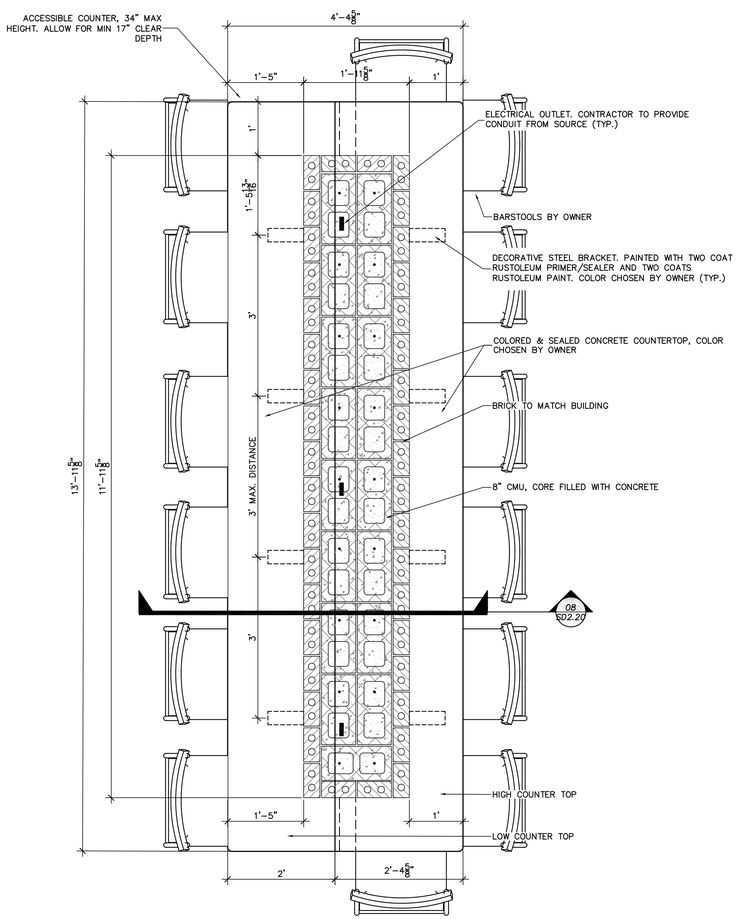

NOTE:
–CONTRACTOR TO PROVIDE SHOP DRAWINGS.

OUTDOOR BAR PLAN 07

Scale: 3/4" = 1'-0"

NOTE:
PROTECT DECK DRAIN OPENING DURING POOL DECK POUR.

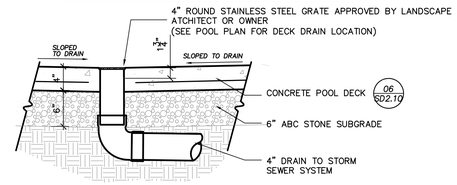

DECK DRAIN 06

Scale: 1/2" = 1'-0"

NOTE:
–ALL STAIRS TO HAVE HANDRAILS ON BOTH SIDES.
–CONC. STEP FINISH AND COLOR TO MATCH CONC. WALKS
–PROVIDE SHOP DRAWINGS FOR ALL SITE HANDRAILS
–PROVIDE AN INTERMEDIATE RAIL POST FOR ALL DISTANCES GREATER THAN 5'

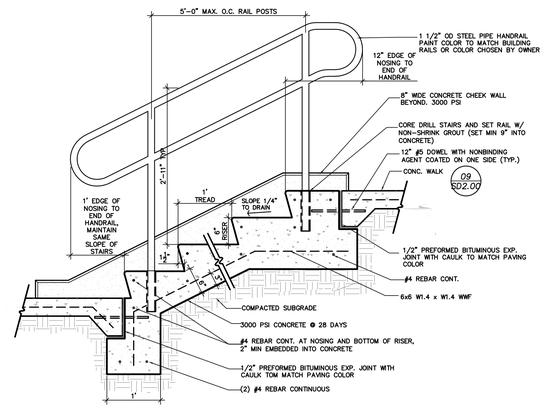

CONCRETE STAIR 05

Scale: 3/4" = 1'-0"

NOTE:
RETAINING WALL MATERIAL SHALL BE "KEYSTONE" MODULAR CONCRETE OR EQUIVALENT APPROVED BY OWNER. CONTRACTOR SHALL PROVIDE FINAL DESIGN, DETAILS, COLOR SAMPLES AND SPECIFICATIONS, CERTIFIED BY A LICENSED PROFESSIONAL ENGINEER, FOR REVIEW AND APPROVAL BY OWNER, PRIOR TO CONSTRUCTION.

HANDRAILS ON WALLS OR RAMPS SHALL BE REQUIRED WHERE THE FINISHED GRADE DIFFERENCE IS 6"–15.49", 42" HIGH GUARDRAILS SHALL BE REQUIRED WHERE THE FINISHED GRADE ELEVATION DIFFERENCE IS 15.5" OR GREATER, AS REQUIRED BY BOCA.

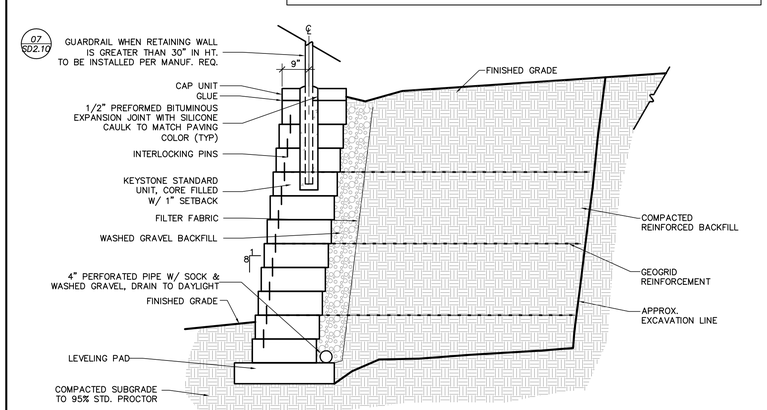

RETAINING WALL W/GUARDRAIL 04

Scale: 1/2" = 1'-0"

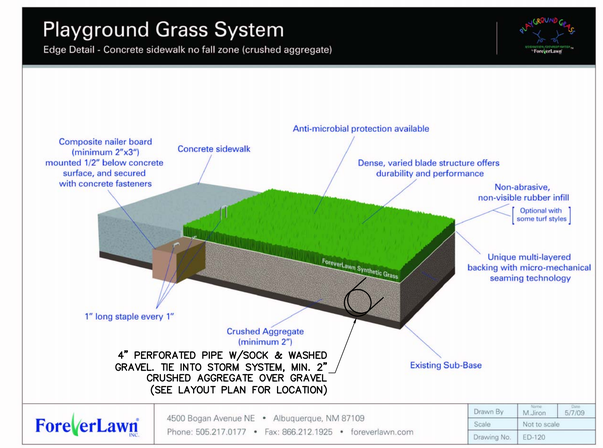

ARTIFICAL GRASS 03

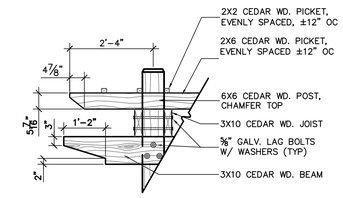

TRELLIS SIDE ELEVATION 02

Scale: 1/2" = 1'-0"

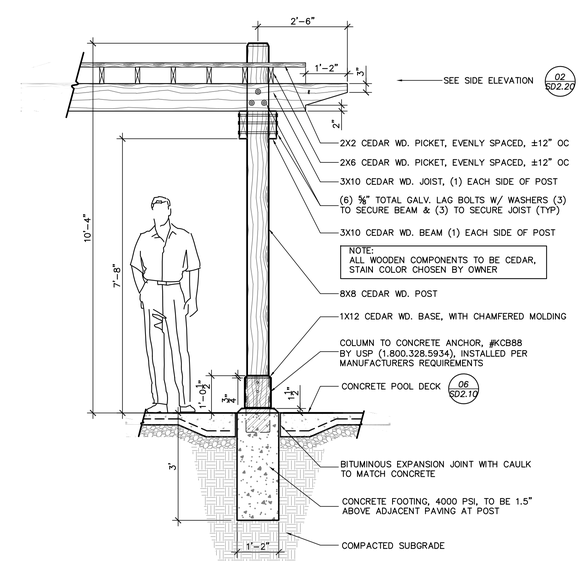

TRELLIS ELEVATION - FRONT 01

Scale: 1/2" = 1'-0"

© 2013 CLINE DESIGN ASSOCIATES, PA EXPRESSLY RESERVES ITS COMMON LAW COPYRIGHT AND OTHER PROPERTY RIGHTS IN THESE PLANS. THESE PLANS ARE NOT TO BE REPRODUCED, CHANGED OR COPIED IN ANY FORM OR MANNER WHATSOEVER, NOR ARE THEY TO BE ASSIGNED TO ANY THIRD PARTY WITHOUT FIRST OBTAINING THE EXPRESSED WRITTEN PERMISSION AND CONSENT OF CLINE DESIGN ASSOCIATES, PA.

CLINE DESIGN
125 N. Harrington St.
Raleigh, NC 27603
919/833-6413
919/836-1280 FAX
ClineDesignAssoc.com

Meridian at Fairfield Park, LLC.

Fairfield Park

4625 & 4544 Fairview Drive
Wilmington, North Carolina

Full Building Set

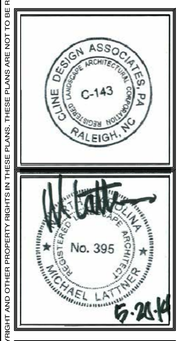

PROJECT: 013060
DATE: 03.19.2014

REVISIONS:	DATE
Comments	04-23-2014
Comments	05.20.2014

DRAWN BY: CT
CHECKED BY: MWL

SITE DETAILS

SD2.20

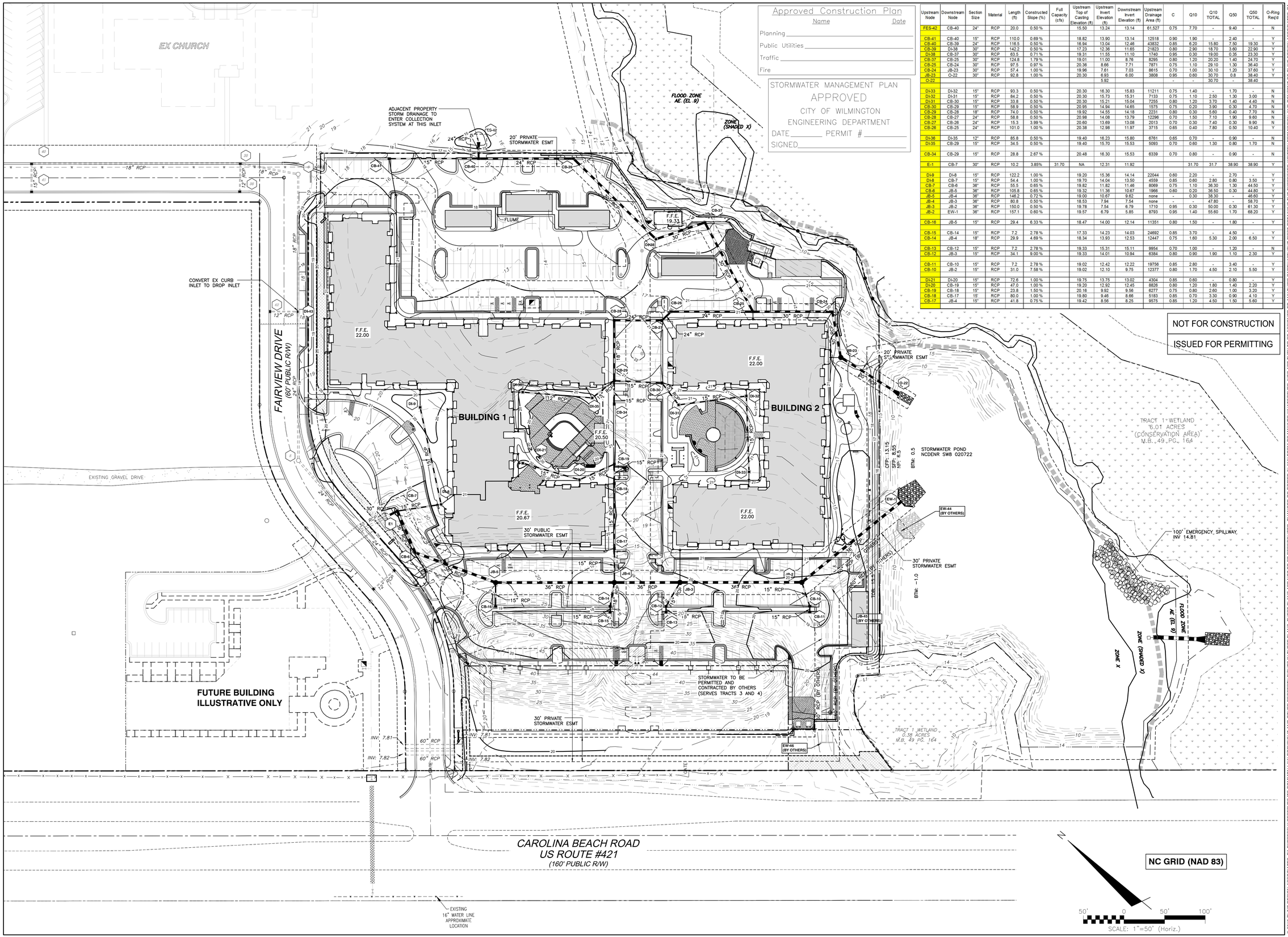

Approved Construction Plan

	Name	Date
Planning		
Public Utilities		
Traffic		
Fire		

STORMWATER MANAGEMENT PLAN
APPROVED
CITY OF WILMINGTON
ENGINEERING DEPARTMENT
DATE _____ PERMIT # _____
SIGNED _____

Upstream Node	Downstream Node	Section Size	Material	Length (ft)	Constructed Slope (%)	Full Capacity (cfs)	Upstream Top of Casting Elevation (ft)	Upstream Invert Elevation (ft)	Downstream Invert Elevation (ft)	Upstream Drainage Area (ft)	C	Q10	Q10 TOTAL	Q50	Q50 TOTAL	O-Ring Req'd
FES-42	CB-40	24"	RCP	20.0	0.50 %		15.50	13.24	13.14	61,527	0.75	7.70	-	9.40	-	N
CB-41	CB-40	15"	RCP	110.0	0.69 %		18.82	13.90	13.14	12518	0.90	1.90	-	2.40	-	Y
CB-40	CB-39	24"	RCP	116.5	0.50 %		16.94	13.04	12.46	43832	0.85	6.20	15.80	7.50	19.30	Y
CB-39	DI-38	30"	RCP	142.2	0.50 %		17.23	12.36	11.65	21823	0.80	2.90	18.70	3.60	22.90	Y
DI-38	CB-37	30"	RCP	63.5	0.71 %		19.31	11.55	11.10	1740	0.95	0.30	19.00	0.35	23.30	Y
CB-37	CB-25	30"	RCP	124.8	1.79 %		19.01	11.00	8.76	8295	0.80	1.20	20.20	1.40	24.70	Y
CB-25	CB-24	30"	RCP	97.5	0.97 %		20.36	8.66	7.71	7871	0.75	1.10	29.10	1.30	36.40	Y
CB-24	JB-23	30"	RCP	57.4	1.00 %		19.96	7.61	7.03	8615	0.70	1.00	30.10	1.20	37.60	Y
JB-23	O-22	30"	RCP	92.8	1.00 %		20.30	6.93	6.00	3808	0.95	0.60	30.70	0.8	38.40	Y
O-22								5.92				-	30.70	-	38.40	
DI-33	DI-32	15"	RCP	93.3	0.50 %		20.30	16.30	15.83	11211	0.75	1.40	-	1.70	-	N
DI-32	DI-31	15"	RCP	84.2	0.50 %		20.30	15.73	15.31	7133	0.75	1.10	2.50	1.30	3.00	N
DI-31	CB-30	15"	RCP	33.8	0.50 %		20.30	15.21	15.04	7255	0.80	1.20	3.70	1.40	4.40	N
CB-30	CB-29	15"	RCP	58.9	0.50 %		20.95	14.94	14.65	1575	0.75	0.20	3.90	0.30	4.70	N
CB-29	CB-28	18"	RCP	74.0	0.50 %		19.92	14.55	14.18	2231	0.80	0.30	5.60	0.40	7.70	N
CB-28	CB-27	24"	RCP	58.8	0.50 %		20.98	14.08	13.79	12296	0.70	1.50	7.10	1.90	9.60	N
CB-27	CB-26	24"	RCP	15.3	3.99 %		20.60	13.69	13.08	2013	0.70	0.30	7.40	0.30	9.90	N
CB-26	CB-25	24"	RCP	101.0	1.00 %		20.38	12.98	11.97	3715	0.65	0.40	7.80	0.50	10.40	Y
DI-36	DI-35	12"	RCP	85.8	0.50 %		19.40	16.23	15.80	6761	0.65	0.70	-	0.90	-	N
DI-35	CB-29	15"	RCP	34.5	0.50 %		19.40	15.70	15.53	5093	0.70	0.60	1.30	0.80	1.70	N
CB-34	CB-29	15"	RCP	28.8	2.67 %		20.48	16.30	15.53	6339	0.70	0.80	-	0.90	-	N
E-1	CB-7	30"	RCP	10.2	3.85%	31.70	NA	12.31	11.92			31.70	31.7	38.90	38.90	Y
DI-9	DI-8	15"	RCP	122.2	1.00 %		19.20	15.38	14.14	22044	0.60	2.20	-	2.70	-	Y
DI-8	CB-7	15"	RCP	54.4	1.00 %		19.70	14.04	13.50	4559	0.85	0.60	2.80	0.80	3.50	Y
CB-7	CB-6	36"	RCP	55.5	0.65 %		19.82	11.82	11.46	8069	0.75	1.10	36.30	1.30	44.50	Y
CB-6	JB-5	36"	RCP	105.8	0.65 %		19.32	11.36	10.67	1966	0.60	0.20	36.50	0.30	44.80	Y
JB-5	JB-4	36"	RCP	146.2	0.72 %		19.00	10.67	9.62	none	-	0.30	38.30	-	46.60	Y
JB-4	JB-3	36"	RCP	80.8	0.50 %		18.53	7.94	7.54	none	-	-	47.80	-	58.70	Y
JB-3	JB-2	36"	RCP	150.0	0.50 %		19.78	7.54	6.79	1710	0.95	0.30	50.00	0.30	61.30	Y
JB-2	EW-1	36"	RCP	157.1	0.60 %		19.57	6.79	5.85	8793	0.95	1.40	55.60	1.70	68.20	Y
CB-16	JB-5	15"	RCP	29.4	6.33 %		18.47	14.00	12.14	11351	0.80	1.50	-	1.80	-	Y
CB-15	CB-14	15"	RCP	7.2	2.78 %		17.33	14.23	14.03	24692	0.85	3.70	-	4.50	-	Y
CB-14	JB-4	18"	RCP	29.9	4.69 %		18.34	13.93	12.53	12447	0.75	1.60	5.30	2.00	6.50	Y
CB-13	CB-12	15"	RCP	7.2	2.78 %		19.33	15.31	15.11	9954	0.70	1.00	-	1.20	-	N
CB-12	JB-3	15"	RCP	34.1	9.00 %		19.33	14.01	10.94	6384	0.80	0.90	1.90	1.10	2.30	Y
CB-11	CB-10	15"	RCP	7.2	2.78 %		19.02	12.42	12.22	19756	0.85	2.80	-	3.40	-	Y
CB-10	JB-2	15"	RCP	31.0	7.58 %		19.02	12.10	9.75	12377	0.80	1.70	4.50	2.10	5.50	Y
DI-21	DI-20	15"	RCP	72.6	1.00 %		19.75	13.75	13.02	4304	0.85	0.60	-	0.80	-	Y
DI-20	CB-19	15"	RCP	47.0	1.00 %		19.20	12.92	12.45	8826	0.80	1.20	1.80	1.40	2.20	Y
CB-19	CB-18	15"	RCP	23.8	1.50 %		20.16	9.92	9.56	6277	0.75	0.80	2.60	1.00	3.20	Y
CB-18	CB-17	15'	RCP	80.0	1.00 %		19.80	9.46	8.66	5183	0.85	0.70	3.30	0.90	4.10	Y
CB-17	JB-4	15"	RCP	41.8	0.75 %		19.42	8.56	8.25	9575	0.85	1.20	4.50	1.50	5.60	Y

NOT FOR CONSTRUCTION

ISSUED FOR PERMITTING

CLINE DESIGN

125 N. Harrington St.
Raleigh, NC 27603
919/833-6413
919/836-1280 FAX
ClineDesignAssoc.com

BNK
BASS, NIXON & KENNEDY, INC.
CONSULTING ENGINEERS
6310 CHAPEL HILL ROAD, SUITE 250
RALEIGH, NORTH CAROLINA 27607
TEL: (919) 851-4422 or (800) 354-1679
FAX: (919) 851-8968
CERT NUMBERS: NCBELS (C-0110)
NCBOLA (C-0267)

Meridian at Fairfield Park, LLC.

Fairfield Park

4625 & 4544 Fairview Drive
Wilmington, North Carolina

NORTH CAROLINA PROFESSIONAL SEAL 022023 ENGINEER KIRBY R. BELL, JR.

PROJECT: 013060
DATE: 12.03.2007

REVISIONS:	DATE
Per C.O.W. Comments	04-25-08
2nd Round Comments	09.20.2013
3rd Round Comments	03.19.2014
4th Round Comments	05.20.2014

DRAWN BY: RAB
CHECKED BY: KRB

GRADING AND STORM DRAINAGE PLAN

CG3.00

© 2013 CLINE DESIGN ASSOCIATES, PA EXPRESSLY RESERVES ITS COMMON LAW COPYRIGHT AND OTHER PROPERTY RIGHTS IN THESE PLANS. THESE PLANS ARE NOT TO BE REPRODUCED, CHANGED OR COPIED IN ANY FORM OR MANNER WHATSOEVER, NOR ARE THEY TO BE ASSIGNED TO ANY THIRD PARTY WITHOUT FIRST OBTAINING THE EXPRESSED WRITTEN PERMISSION AND CONSENT OF CLINE DESIGN ASSOCIATES, PA.

R:\2013\13146 - Fairfield Park-Wilmington\CIVIL\Construction\13146_BASE (CLINE).dwg, CG3.00, 5/23/2014 9:07:41 AM, iris

NOT FOR CONSTRUCTION

ISSUED FOR PERMITTING

Approved Construction Plan

	Name	Date
Planning		
Public Utilities		
Traffic		
Fire		

STORMWATER MANAGEMENT PLAN
APPROVED
CITY OF WILMINGTON
ENGINEERING DEPARTMENT
DATE_____ PERMIT #_____
SIGNED_____

NOTES

1. 2% MAXIMUM GRADE SHALL BE HELD AT ALL SIDEWALK INTERSECTIONS, TURNS, 5 FT OUTSIDE BUILDING ACCESS POINTS AND WITHIN ALL HANDICAP PARKING SPACES BOTH HORIZONTALLY AND DIAGONALLY.
2. ADA STANDARD SAFETY RAILS REQUIRED AT TOP OF ALL WALLS WITH HEIGHTS OVER 30 INCHES.

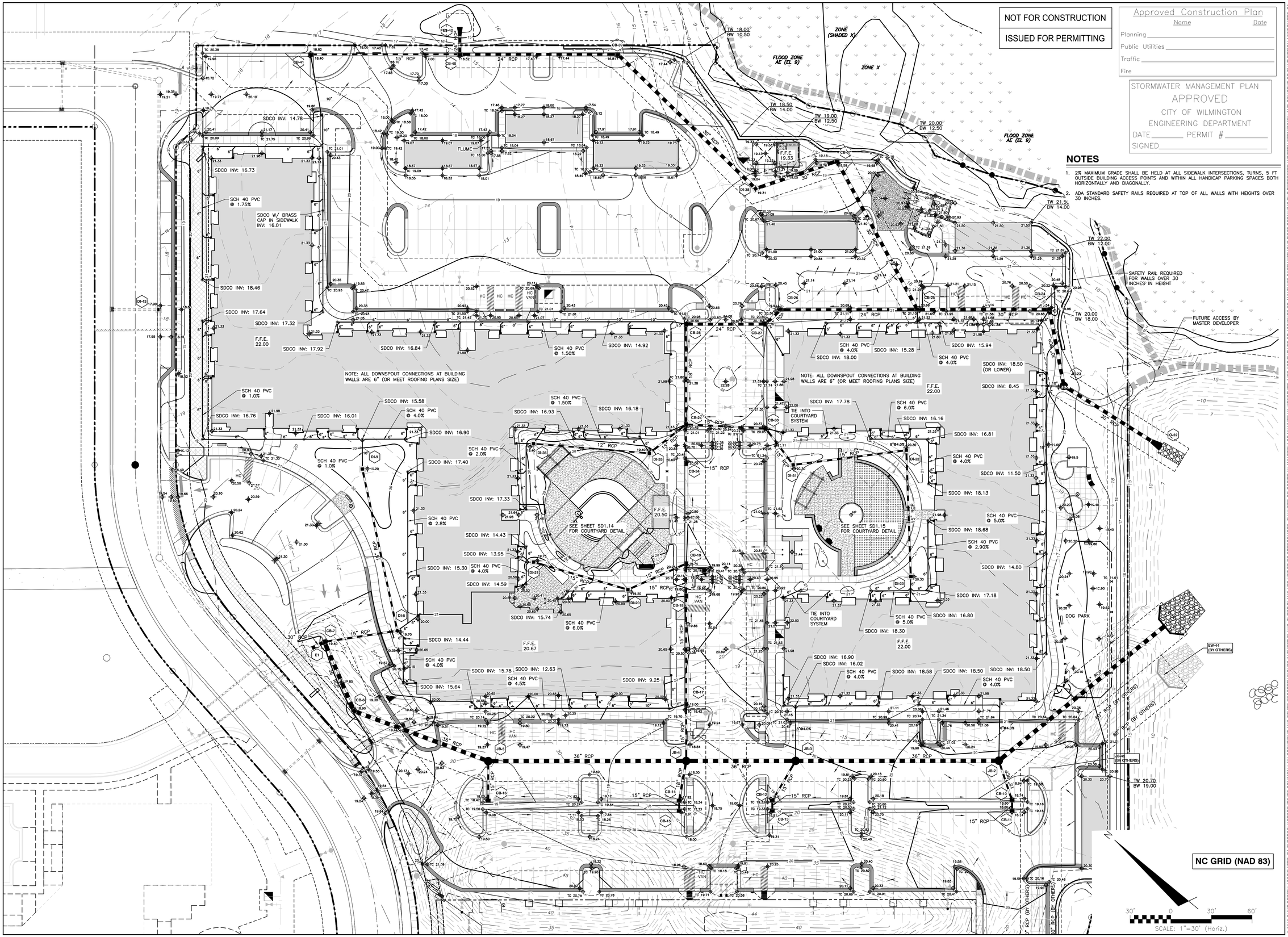

CLINE DESIGN
125 N. Harrington St.
Raleigh, NC 27603
919/833-6413
919/836-1280 FAX
ClineDesignAssoc.com

BNK
BASS, NIXON & KENNEDY, INC.
CONSULTING ENGINEERS
6310 CHAPEL HILL ROAD, SUITE 250
RALEIGH, NORTH CAROLINA 27607
TEL: (919) 851-4422 or (800) 354-1879
FAX: (919) 851-8968
CERT NUMBERS: NCBELS (C-0110)
NCBOLA (C-0267)

Meridian at Fairfield Park, LLC.

Fairfield Park

4625 & 4544 Fairview Drive
Wilmington, North Carolina

NORTH CAROLINA PROFESSIONAL SEAL 042023 ENGINEER KIRBY R. BELL, JR.

PROJECT: 013060

DATE: 12.03.2007

REVISIONS:	DATE
Per C.O.W. Comments	04-25-08
2nd Round Comments	09.20.2013
3rd Round Comments	03.19.2014
4th Round Comments	05.20.2014

DRAWN BY:	RAB
CHECKED BY:	KRB

ENLARGED
GRADING AND STORM
DRAINAGE PLAN

CG3.10

© 2013 CLINE DESIGN ASSOCIATES, PA EXPRESSLY RESERVES ITS COMMON LAW COPYRIGHT AND OTHER PROPERTY RIGHTS IN THESE PLANS. THESE PLANS ARE NOT TO BE REPRODUCED, CHANGED OR COPIED IN ANY FORM OR MANNER WHATSOEVER, NOR ARE THEY TO BE ASSIGNED TO ANY THIRD PARTY WITHOUT FIRST OBTAINING THE EXPRESSED WRITTEN PERMISSION AND CONSENT OF CLINE DESIGN ASSOCIATES, PA.

R:\2013\13146 - Fairfield Park Wilmington\CIVIL\Construction\13146_BASE (CLINE).dwg, CG3.10, 5/23/2014 9:11:06 AM, rlis

EX CHURCH

LIGHT-DUTY PAVING

HEAVY-DUTY PAVING

FLOOD ZONE AE (EL 9)

ZONE (SHADED X)

CONCRETE PAD

FLOOD ZONE AE (EL 9)

FAIRVIEW DRIVE (60' PUBLIC R/W)

BUILDING 1

BUILDING 2

EXISTING GRAVEL DRIVE

FUTURE BUILDING ILLUSTRATIVE ONLY

LIGHT-DUTY PAVING

HEAVY-DUTY PAVING

CONCRETE PAD

TRACT 1 WETLAND 0.38 ACRES M.B. 49 PG. 164

CAROLINA BEACH ROAD US ROUTE #421 (160' PUBLIC R/W)

LEGEND

- HEAVY-DUTY PAVING
- LIGHT-DUTY PAVING
- CONCRETE PAD (DUMPSTER)

NOT FOR CONSTRUCTION

ISSUED FOR PERMITTING

Approved Construction Plan

	Name	Date
Planning		
Public Utilities		
Traffic		
Fire		

STORMWATER MANAGEMENT PLAN
APPROVED
CITY OF WILMINGTON
ENGINEERING DEPARTMENT
DATE_____ PERMIT #_____
SIGNED_____

N

50' 0 50' 100'
SCALE: 1"=50' (Horiz.)

CLINE DESIGN
125 N. Harrington St.
Raleigh, NC 27603
919/833-6413
919/836-1280 FAX
ClineDesignAssoc.com

BNK
BASS, NIXON & KENNEDY, INC.
CONSULTING ENGINEERS
6310 CHAPEL HILL ROAD, SUITE 250
RALEIGH, NORTH CAROLINA 27607
TEL: (919) 851-4422 or (800) 354-1679
FAX: (919) 851-8968
CERT NUMBERS: NCBELS (C-0110)
NCBOLA (C-0267)

Meridian at Fairfield Park, LLC.
Fairfield Park
4625 & 4544 Fairview Drive
Wilmington, North Carolina

NORTH CAROLINA PROFESSIONAL SEAL 022023 ENGINEER KIRBY R. BELL, JR.

PROJECT: 013060
DATE: 12.03.2007

REVISIONS:	DATE
Per C.O.W. Comments	04-25-08
2nd Round Comments	09.20.2013
3rd Round Comments	03.19.2014
4th Round Comments	05.20.2014

DRAWN BY: RAB
CHECKED BY: KRB

PAVEMENT PLAN

CG3.20

© 2013 CLINE DESIGN ASSOCIATES, PA EXPRESSLY RESERVES ITS COMMON LAW COPYRIGHT AND OTHER PROPERTY RIGHTS IN THESE PLANS. THESE PLANS ARE NOT TO BE REPRODUCED, CHANGED OR COPIED IN ANY FORM OR MANNER WHATSOEVER, NOR ARE THEY TO BE ASSIGNED TO ANY THIRD PARTY WITHOUT FIRST OBTAINING THE EXPRESSED WRITTEN PERMISSION AND CONSENT OF CLINE DESIGN ASSOCIATES, PA.

R:\2013\13146 - Fairfield Park-Wilmington\CIVIL\Construction\13146_BASE (CLINE).dwg, CG3.20, 5/23/2014 9:11:37 AM, rris

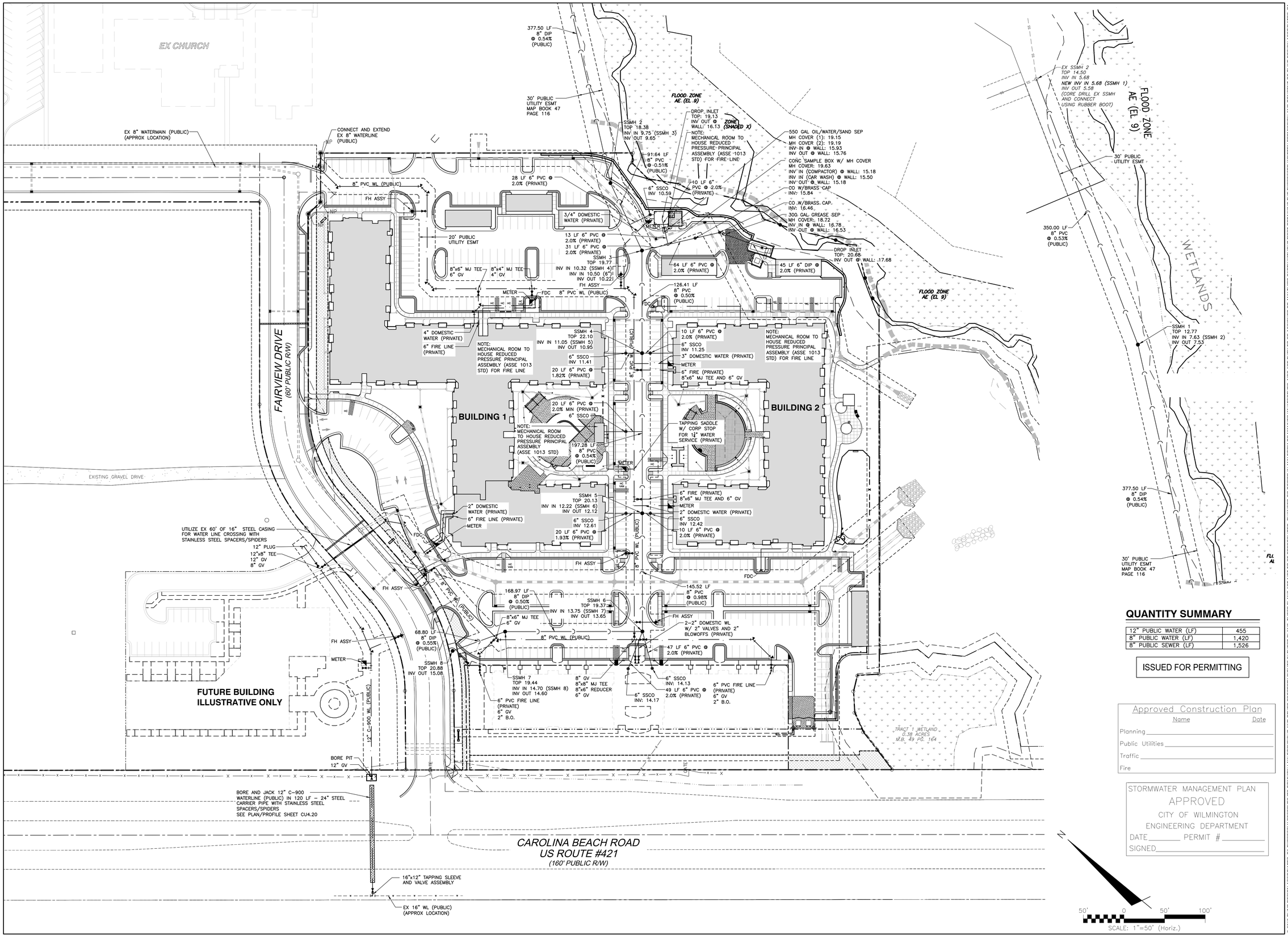

QUANTITY SUMMARY

12" PUBLIC WATER (LF)	455
8" PUBLIC WATER (LF)	1,420
8" PUBLIC SEWER (LF)	1,526

ISSUED FOR PERMITTING

Approved Construction Plan

Name	Date
Planning	
Public Utilities	
Traffic	
Fire	

STORMWATER MANAGEMENT PLAN
APPROVED
CITY OF WILMINGTON
ENGINEERING DEPARTMENT
DATE_____ PERMIT #_____
SIGNED_____

CLINE DESIGN
125 N. Harrington St.
Raleigh, NC 27603
919/833-6413
919/836-1280 FAX
ClineDesignAssoc.com

BNK
BASS, NIXON & KENNEDY, INC.
CONSULTING ENGINEERS
6310 CHAPEL HILL ROAD, SUITE 250
RALEIGH, NORTH CAROLINA 27607
TEL: (919) 851-4422 or (800) 354-1679
FAX: (919) 851-8968
CERT NUMBERS: NCBELS (C-0110) NCBOLA (C-0267)

Meridian at Fairfield Park, LLC.

Fairfield Park

4625 & 4544 Fairview Drive
Wilmington, North Carolina

NORTH CAROLINA PROFESSIONAL SEAL 022023 ENGINEER KIRBY R. BELL, JR.

PROJECT: 013060
DATE: 12.03.2007

REVISIONS:	DATE
Per C.O.W. Comments	04-25-08
2nd Round Comments	09.20.2013
3rd Round Comments	03.19.2014
4th Round Comments	05.20.2014

DRAWN BY: RAB
CHECKED BY: KRB

UTILITY PLAN

CU4.00

© 2013 CLINE DESIGN ASSOCIATES, PA EXPRESSLY RESERVES ITS COMMON LAW COPYRIGHT AND OTHER PROPERTY RIGHTS IN THESE PLANS. THESE PLANS ARE NOT TO BE REPRODUCED, CHANGED OR COPIED IN ANY FORM OR MANNER WHATSOEVER, NOR ARE THEY TO BE ASSIGNED TO ANY THIRD PARTY WITHOUT FIRST OBTAINING THE EXPRESSED WRITTEN PERMISSION AND CONSENT OF CLINE DESIGN ASSOCIATES, PA.

R:\20131314B - Fairfield Park-Wilmington\CIVIL\Construction\13146_BASE (CLINE).dwg, CU4.00, 5/23/2014 9:12:16 AM, rls

SANITARY SEWER OUTFALL

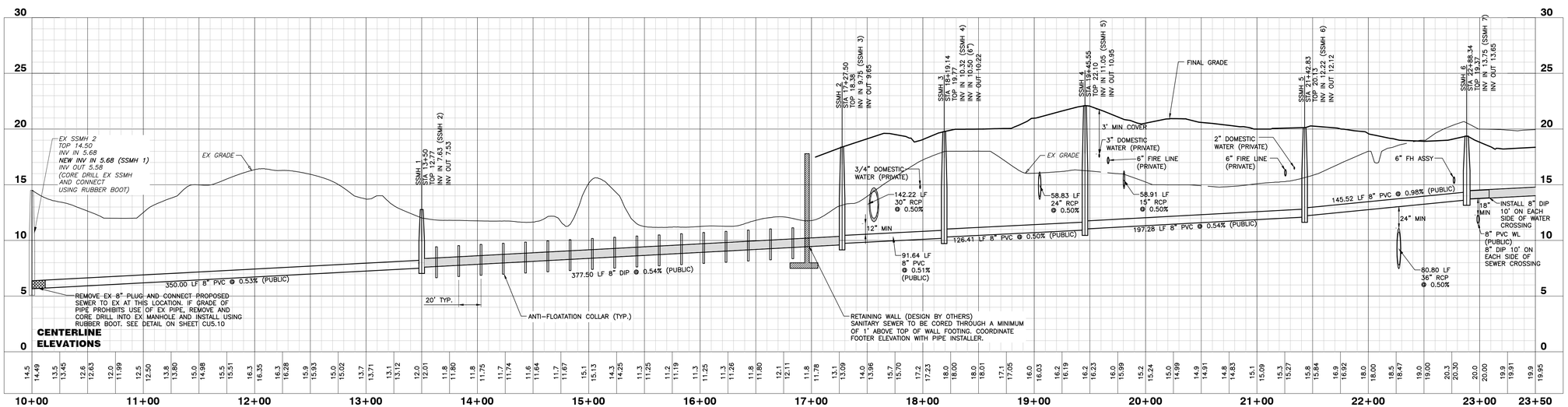

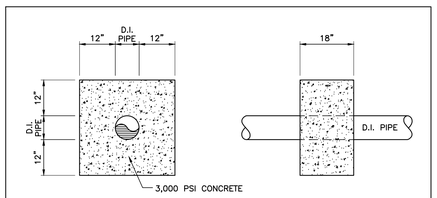

ANTI-FLOATATION COLLAR DETAIL

NOT TO SCALE

CAPE FEAR PUBLIC UTILITY AUTHORITY STANDARD SEWER NOTES:

1. SEWER GUARDS REQUIRED AT ALL MANHOLES. STAINLESS STEEL SEWER GUARDS REQUIRED AT MANHOLES LOCATED IN TRAFFIC AREAS.
2. SERVICES SHALL BE PERPENDICULAR TO MAIN AND TERMINATE AT RIGHT-OF-WAY LINE. SERVICES IN CUL-DE-SACS ARE REQUIRED TO BE PERPENDICULAR, OR MUST ORIGINATE IN MANHOLE AND TERMINATE AT RIGHT-OF-WAY LINE.
3. ALL SERVICES TYING INTO DUCTILE IRON MAINS SHALL BE CONSTRUCTED OF CLASS 50, DIP, WITH PROTECTO 401 CERAMIC EPOXY LINING.
4. MINIMUM 10' UTILITIES EASEMENT PROVIDED ALONG THE FRONTAGE OF ALL LOTS AND AS SHOWN FOR NEW DEVELOPMENTS.
5. NO FLEXIBLE COUPLINGS SHALL BE USED.
6. ALL STAINLESS STEEL FASTENERS SHALL BE 316.

STANDARD SEWER NOTES

(REQUIRED ON ALL SEWER PLAN AND PROFILE SHEETS)

ISSUED FOR PERMITTING

Approved Construction Plan

	Name	Date
Planning		
Public Utilities		
Traffic		
Fire		

STORMWATER MANAGEMENT PLAN
APPROVED
CITY OF WILMINGTON
ENGINEERING DEPARTMENT
DATE_____ PERMIT #_____
SIGNED_____

N

50' 0 50' 100'

SCALE: 1"=50' (Horiz.)

CLINE DESIGN

125 N. Harrington St.
Raleigh, NC 27603
919/833-6413
919/836-1280 FAX
ClineDesignAssoc.com

BNK

BASS, NIXON & KENNEDY, INC.
CONSULTING ENGINEERS
6310 CHAPEL HILL ROAD, SUITE 250
RALEIGH, NORTH CAROLINA 27607
TEL: (919) 851-4422 or (800) 354-1879
FAX: (919) 851-8968
CERT NUMBERS: NCBELS (C-0110)
NCBOLA (C-0267)

Meridian at Fairfield Park, LLC.

Fairfield Park

4625 & 4544 Fairview Drive
Wilmington, North Carolina

NORTH CAROLINA PROFESSIONAL ENGINEER SEAL 040023 KIRKLEY R. BELL, JR.

PROJECT: 013060	
DATE: 12.03.2007	
REVISIONS:	DATE
Per C.O.W. Comments	04-25-08
2nd Round Comments	09.20.2013
3rd Round Comments	03.19.2014
4th Round Comments	05.20.2014

DRAWN BY:	RAB
CHECKED BY:	KRB

UTILITY PROFILE

CU4.10

© 2013 CLINE DESIGN ASSOCIATES, PA EXPRESSLY RESERVES ITS COMMON LAW COPYRIGHT AND OTHER PROPERTY RIGHTS IN THESE PLANS. THESE PLANS ARE NOT TO BE REPRODUCED, CHANGED OR COPIED IN ANY FORM OR MANNER WHATSOEVER, NOR ARE THEY TO BE ASSIGNED TO ANY THIRD PARTY WITHOUT FIRST OBTAINING THE EXPRESSED WRITTEN PERMISSION AND CONSENT OF CLINE DESIGN ASSOCIATES, PA.

R:\2013\13146 - Fairfield Park-Wilmington\CIVIL\Construction\13146_BASE (CLINE).dwg, CU4.10, 5/23/2014 9:15:05 AM, lris

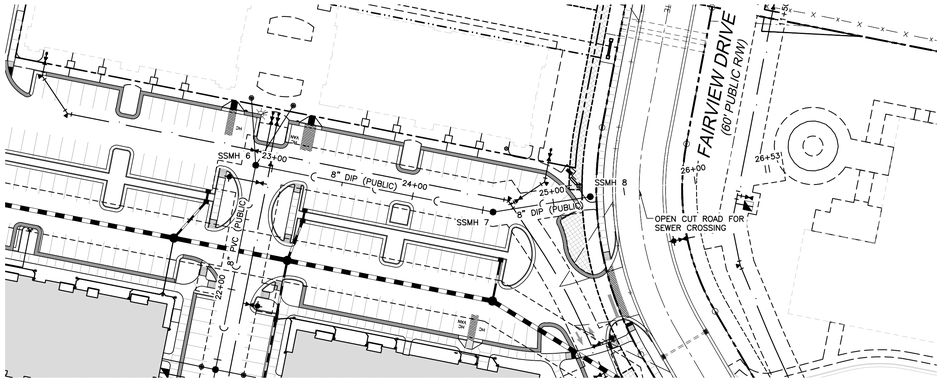

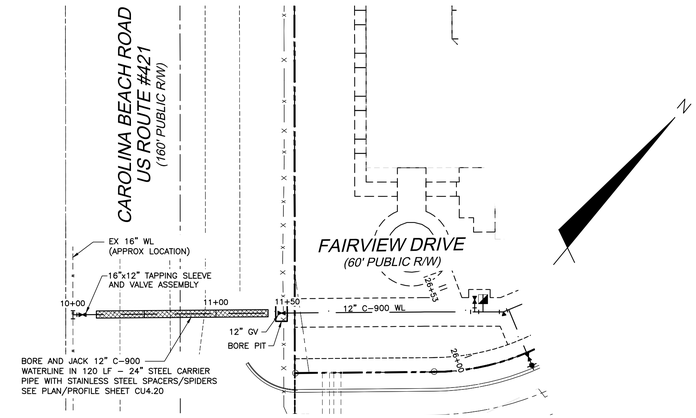

SANITARY SEWER OUTFALL

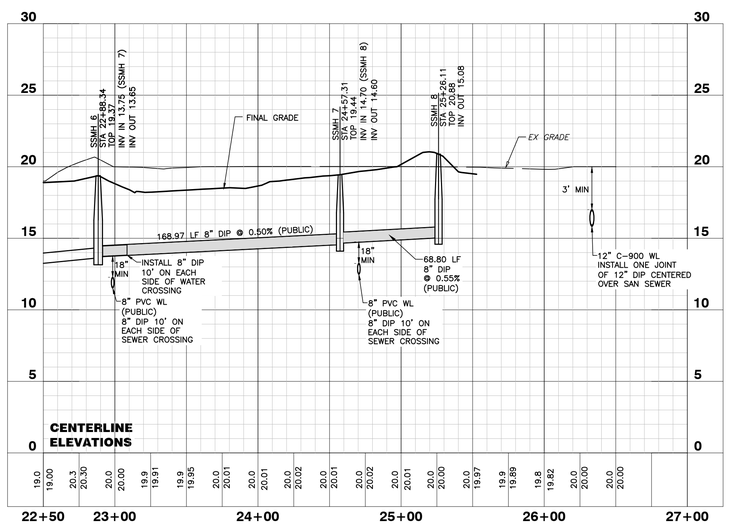

WATERMAIN CROSSING UNDER CAROLINA BEACH ROAD

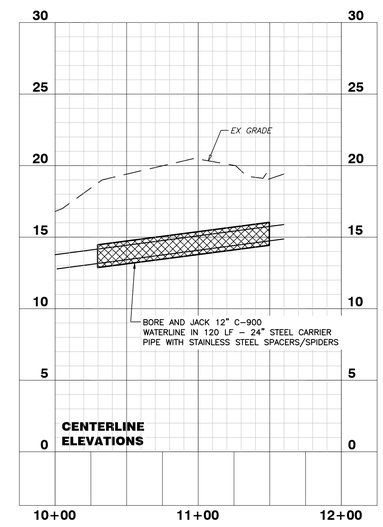

CAPE FEAR PUBLIC UTILITY AUTHORITY STANDARD SEWER NOTES:

1. SEWER GUARDS REQUIRED AT ALL MANHOLES. STAINLESS STEEL SEWER GUARDS REQUIRED AT MANHOLES LOCATED IN TRAFFIC AREAS.
2. SERVICES SHALL BE PERPENDICULAR TO MAIN AND TERMINATE AT RIGHT-OF-WAY LINE. SERVICES IN CUL-DE-SACS ARE REQUIRED TO BE PERPENDICULAR, OR MUST ORIGINATE IN MANHOLE AND TERMINATE AT RIGHT-OF-WAY LINE.
3. ALL SERVICES TYING INTO DUCTILE IRON MAINS SHALL BE CONSTRUCTED OF CLASS 50, DIP, WITH PROTECTO 401 CERAMIC EPOXY LINING.
4. MINIMUM 10' UTILITIES EASEMENT PROVIDED ALONG THE FRONTAGE OF ALL LOTS AND AS SHOWN FOR NEW DEVELOPMENTS.
5. NO FLEXIBLE COUPLINGS SHALL BE USED.
6. ALL STAINLESS STEEL FASTENERS SHALL BE 316.

STANDARD SEWER NOTES

(REQUIRED ON ALL SEWER PLAN AND PROFILE SHEETS)

ISSUED FOR PERMITTING

Approved Construction Plan

	Name	Date
Planning		
Public Utilities		
Traffic		
Fire		

STORMWATER MANAGEMENT PLAN
APPROVED
CITY OF WILMINGTON
ENGINEERING DEPARTMENT
DATE_____ PERMIT # _____
SIGNED_____

50' 0 50' 100'
SCALE: 1"=50' (Horiz.)

CLINE DESIGN
125 N. Harrington St.
Raleigh, NC 27603
919/833-6413
919/836-1280 FAX
ClineDesignAssoc.com

BNK
BASS, NIXON & KENNEDY, INC.
CONSULTING ENGINEERS
6310 CHAPEL HILL ROAD, SUITE 250
RALEIGH, NORTH CAROLINA 27607
TEL: (919) 851-4422 or (800) 354-1879
FAX: (919) 851-8968
CERT NUMBERS: NCBELS (C-0110)
NCBOLA (C-0267)

© 2013 CLINE DESIGN ASSOCIATES, PA EXPRESSLY RESERVES ITS COMMON LAW COPYRIGHT AND OTHER PROPERTY RIGHTS IN THESE PLANS. THESE PLANS ARE NOT TO BE REPRODUCED, CHANGED OR COPIED IN ANY FORM OR MANNER WHATSOEVER, NOR ARE THEY TO BE ASSIGNED TO ANY THIRD PARTY WITHOUT FIRST OBTAINING THE EXPRESSED WRITTEN PERMISSION AND CONSENT OF CLINE DESIGN ASSOCIATES, PA.

Meridian at Fairfield Park, LLC.
Fairfield Park
4625 & 4544 Fairview Drive
Wilmington, North Carolina

NORTH CAROLINA PROFESSIONAL SEAL 040223 ENGINEER KIRBY R. BELL, JR.

PROJECT: 013060
DATE: 12.03.2007

REVISIONS:	DATE
Per C.O.W. Comments	04-25-08
2nd Round Comments	09.20.2013
3rd Round Comments	03.19.2014
4th Round Comments	05.20.2014

DRAWN BY: RAB
CHECKED BY: KRB

UTILITY PROFILE

CU4.20

R:\2013\13146 - Fairfield Park-Wilmington\CIVIL\Construction\13146_BASE (CLINE).dwg, CU4.20, 5/23/2014 9:15:53 AM, iris

Temporary Diversion Ditch Calculations

DITCH NUMBER	LENGTH (FT)	HIGH (FT)	LOW (FT)	ELEVATION DIFF. (FT)	SLOPE (%)	VELOCITY (FPS)	*LINING	Manning n	TEMPORARY ROCK CHECK DAMS: CHECK DAM SPACING (FT)	NUMBER REQUIRED	NUMBER PROVIDED
1	510	20	13	7	1.37	1.72	GRASS	0.035	146	4	5
2	220	21	13	8	3.64	2.31	GRASS	0.035	55	4	4
3	290	16	13	3	1.03	2.90	GRASS	0.035	193	2	2

LEGEND

- TEMP LOW SPOT SILT FENCE OUTLET
- TEMP ROCK CHECK DAM
- TEMP SILT SOCK
- TEMP INLET PROTECTION
- TEMP CONSTRUCTION ENTRANCE
- TEMP DIVERSION DITCH (LINED–SEE DETAIL)
- TEMP SILT FENCE
- TEMP TREE PROTECTION FENCE
- LIMITS OF DISTURBANCE

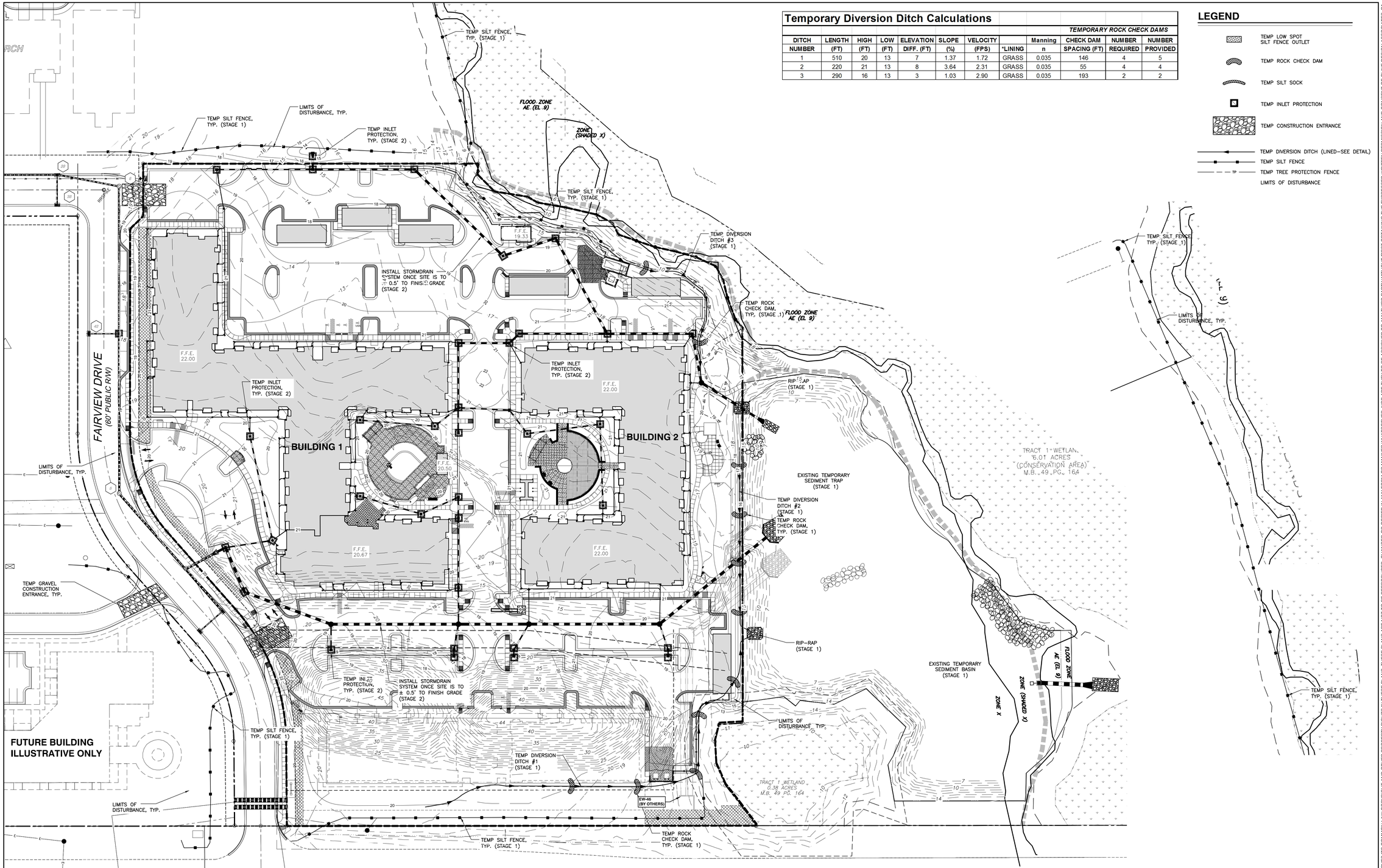

NOT FOR CONSTRUCTION

ISSUED FOR PERMITTING

STORMWATER MANAGEMENT PLAN
APPROVED
CITY OF WILMINGTON
ENGINEERING DEPARTMENT
DATE_____ PERMIT #_____
SIGNED_____

Approved Construction Plan

	Name	Date
Planning		
Public Utilities		
Traffic		
Fire		

N

50' 0 50' 100'
SCALE: 1"=50' (Horiz.)

CLINE DESIGN
125 N. Harrington St.
Raleigh, NC 27603
919/833-6413
919/836-1280 FAX
ClineDesignAssoc.com

BNK
BASS, NIXON & KENNEDY, INC.
CONSULTING ENGINEERS
6310 CHAPEL HILL ROAD, SUITE 250
RALEIGH, NORTH CAROLINA 27607
TEL: (919) 851-4422 or (800) 354-1679
FAX: (919) 851-8968
CERT NUMBERS: NCBELS (C-0110)
NCBOLA (C-0267)

Meridian at Fairfield Park, LLC.
Fairfield Park
4625 & 4544 Fairview Drive
Wilmington, North Carolina

NORTH CAROLINA PROFESSIONAL SEAL 040023 ENGINEER KIMBER R. BELL, JR.
NOT FOR CONSTRUCTION

PROJECT: 013060
DATE: 12.03.2007

REVISIONS:	DATE
Per C.O.W. Comments	04-25-08
2nd Round Comments	09.20.2013
3rd Round Comments	03.19.2014
4th Round Comments	05.20.2014

DRAWN BY: RAB
CHECKED BY: KRB

EROSION AND SEDIMENT CONTROL PLAN

CE5.00

© 2013 CLINE DESIGN ASSOCIATES, PA. EXPRESSLY RESERVES ITS COMMON LAW COPYRIGHT AND OTHER PROPERTY RIGHTS IN THESE PLANS. THESE PLANS ARE NOT TO BE REPRODUCED, CHANGED OR COPIED IN ANY FORM OR MANNER WHATSOEVER, NOR ARE THEY TO BE ASSIGNED TO ANY THIRD PARTY WITHOUT FIRST OBTAINING THE EXPRESSED WRITTEN PERMISSION AND CONSENT OF CLINE DESIGN ASSOCIATES, PA.

R:\2013\13146 - Fairfield Park-Wilmington\CIVIL\Construction\13146_BASE (CLINE).dwg, CE5.00, 5/23/2014 9:16:44 AM, iris

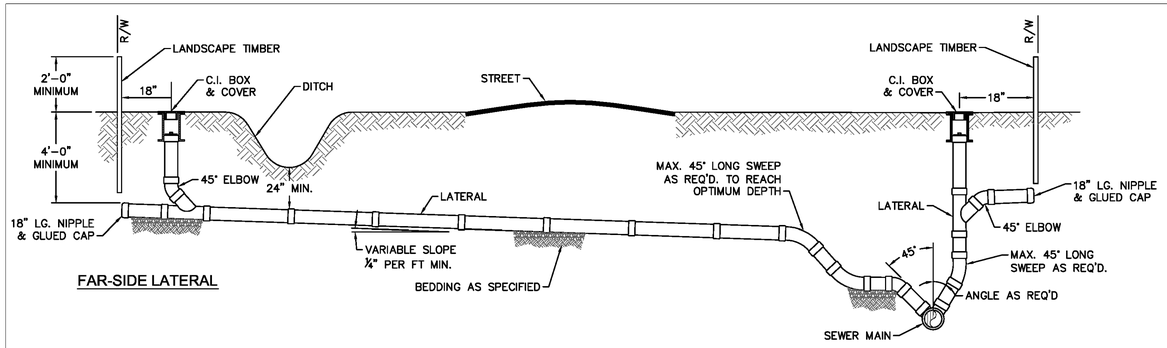

FAR-SIDE LATERAL

NEAR-SIDE LATERAL WITH RIGHT-OF-WAY RESTRICTIONS

NOTE: FOR PRIVATE 8" SERVICES, MANHOLES ARE REQUIRED FOR TIE-IN TO MAIN

STANDARD SERVICE CONNECTION TO SANITARY SEWER

NOT TO SCALE

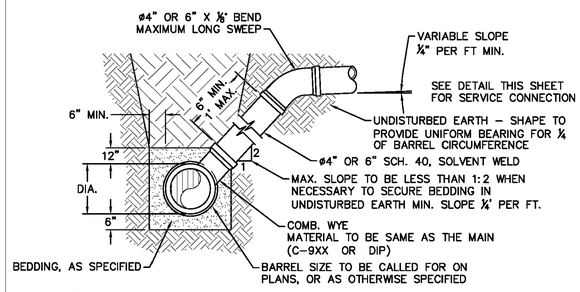

NOTE: FOR PRIVATE 8" SERVICES, MANHOLES ARE REQUIRED FOR TIE-IN TO MAIN

STANDARD SERVICE LATERAL

(MAIN DEPTH LESS THAN 8FT)

NOT TO SCALE

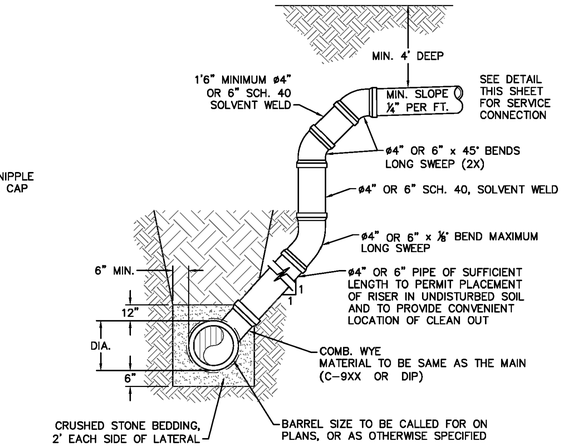

NOTES:

1. SPECIAL CARE SHALL BE TAKEN DURING BACKFILL OPERATIONS. THE RISER SHALL BE PLUMB AND TRUE AT ALL TIMES, AND REST ON FIRM, STABLE FOUNDATION.
2. FOR PRIVATE 8" SERVICES, MANHOLES ARE REQUIRED FOR TIE-IN TO MAIN.

DEEP SERVICE LATERAL

(MAIN DEPTH GREATER THAN 8FT)

NOT TO SCALE

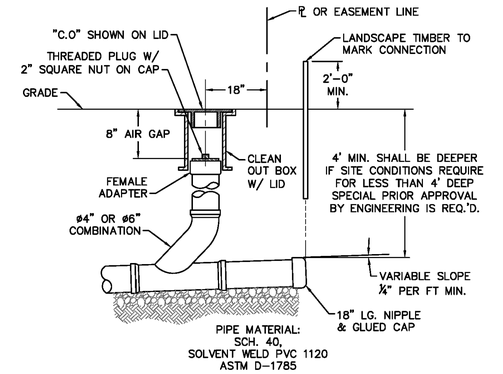

NOTE: FOR PRIVATE 8" SERVICES, MANHOLES ARE REQUIRED FOR TIE-IN TO MAIN

SERVICE CONNECTION & CLEAN-OUT

NOT TO SCALE

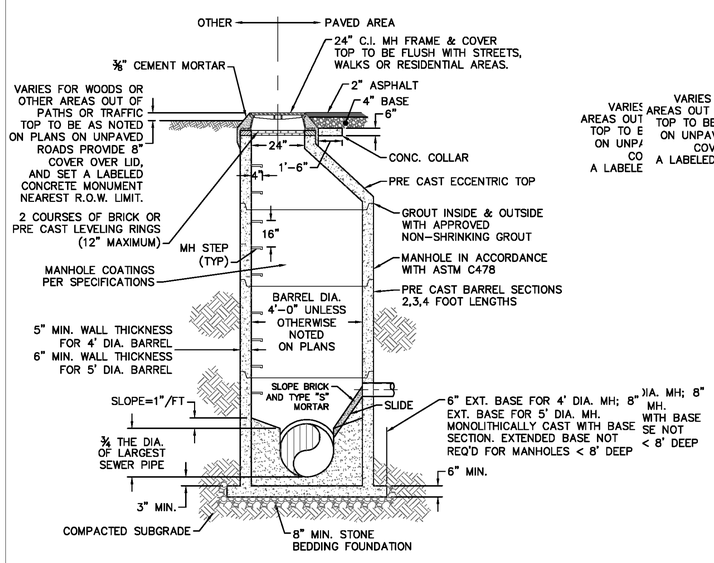

PRECAST CONCRETE OFFSET MANHOLE TYPICAL

(LESS THAN 30" DROP)

NOT TO SCALE

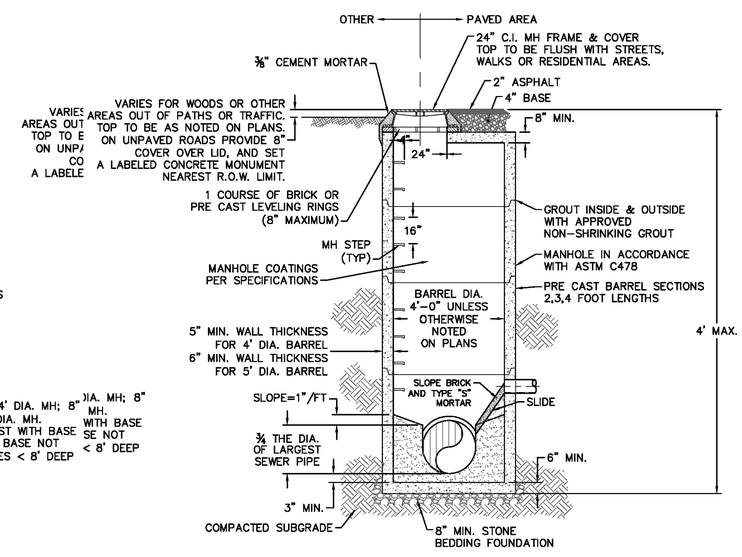

PRECAST CONCRETE FLAT TOP MANHOLE TYPICAL

(LESS THAN 30" DROP)

NOT TO SCALE

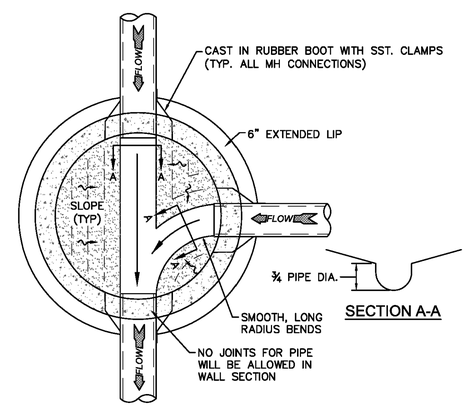

MANHOLE FLOOR PLAN

NOT TO SCALE

CAPE FEAR PUBLIC UTILITY AUTHORITY STANDARD SEWER NOTES:

1. SEWER GUARDS REQUIRED AT ALL MANHOLES. STAINLESS STEEL SEWER GUARDS REQUIRED AT MANHOLES LOCATED IN TRAFFIC AREAS.
2. SERVICES SHALL BE PERPENDICULAR TO MAIN AND TERMINATE AT RIGHT-OF-WAY LINE. SERVICES IN CUL-DE-SACS ARE REQUIRED TO BE PERPENDICULAR, OR MUST ORIGINATE IN MANHOLE AND TERMINATE AT RIGHT-OF-WAY LINE.
3. ALL SERVICES TYING INTO DUCTILE IRON MAINS SHALL BE CONSTRUCTED OF CLASS 50, DIP, WITH PROTECTO 401 CERAMIC EPOXY LINING.
4. MINIMUM 10' UTILITIES EASEMENT PROVIDED ALONG THE FRONTAGE OF ALL LOTS AND AS SHOWN FOR NEW DEVELOPMENTS.
5. NO FLEXIBLE COUPLINGS SHALL BE USED.
6. ALL STAINLESS STEEL FASTENERS SHALL BE 316.

STANDARD SEWER NOTES

(REQUIRED ON ALL SEWER PLAN AND PROFILE SHEETS)

ISSUED FOR PERMITTING

Approved Construction Plan

	Name	Date
Planning		
Public Utilities		
Traffic		
Fire		

STORMWATER MANAGEMENT PLAN
APPROVED
CITY OF WILMINGTON
ENGINEERING DEPARTMENT
DATE _____ PERMIT # _____
SIGNED _____

CLINE DESIGN
125 N. Harrington St.
Raleigh, NC 27603
919/833-6413
919/836-1280 FAX
ClineDesignAssoc.com

BNK
BASS, NIXON & KENNEDY, INC.
CONSULTING ENGINEERS
6310 CHAPEL HILL ROAD, SUITE 250
RALEIGH, NORTH CAROLINA 27607
TEL: (919) 851-4422 or (800) 354-1679
FAX: (919) 851-8968
CERT NUMBERS: NCBELS (C-0110) NCBOLA (C-0267)

Meridian at Fairfield Park, LLC.
Fairfield Park
4625 & 4544 Fairview Drive
Wilmington, North Carolina

NORTH CAROLINA PROFESSIONAL ENGINEER SEAL 040023 KIRBY R. BELL, JR.

PROJECT: 013060
DATE: 12.03.2007

REVISIONS:	DATE
Per C.O.W. Comments	04-25-08
2nd Round Comments	09.20.2013
3rd Round Comments	03.19.2014

DRAWN BY: RAB
CHECKED BY: KRB

SEWER DETAILS

CU5.20

© 2013 CLINE DESIGN ASSOCIATES, PA EXPRESSLY RESERVES ITS COMMON LAW COPYRIGHT AND OTHER PROPERTY RIGHTS IN THESE PLANS. THESE PLANS ARE NOT TO BE REPRODUCED, CHANGED OR COPIED IN ANY FORM OR MANNER WHATSOEVER, NOR ARE THEY TO BE ASSIGNED TO ANY THIRD PARTY WITHOUT FIRST OBTAINING THE EXPRESSED WRITTEN PERMISSION AND CONSENT OF CLINE DESIGN ASSOCIATES, PA.

R:\2013\13146 - Fairfield Park-Wilmington\CIVIL\Construction\13146_BASE (CLINE).dwg, CU5.20, 5/9/2014 2:59:44 PM, robert burgoon

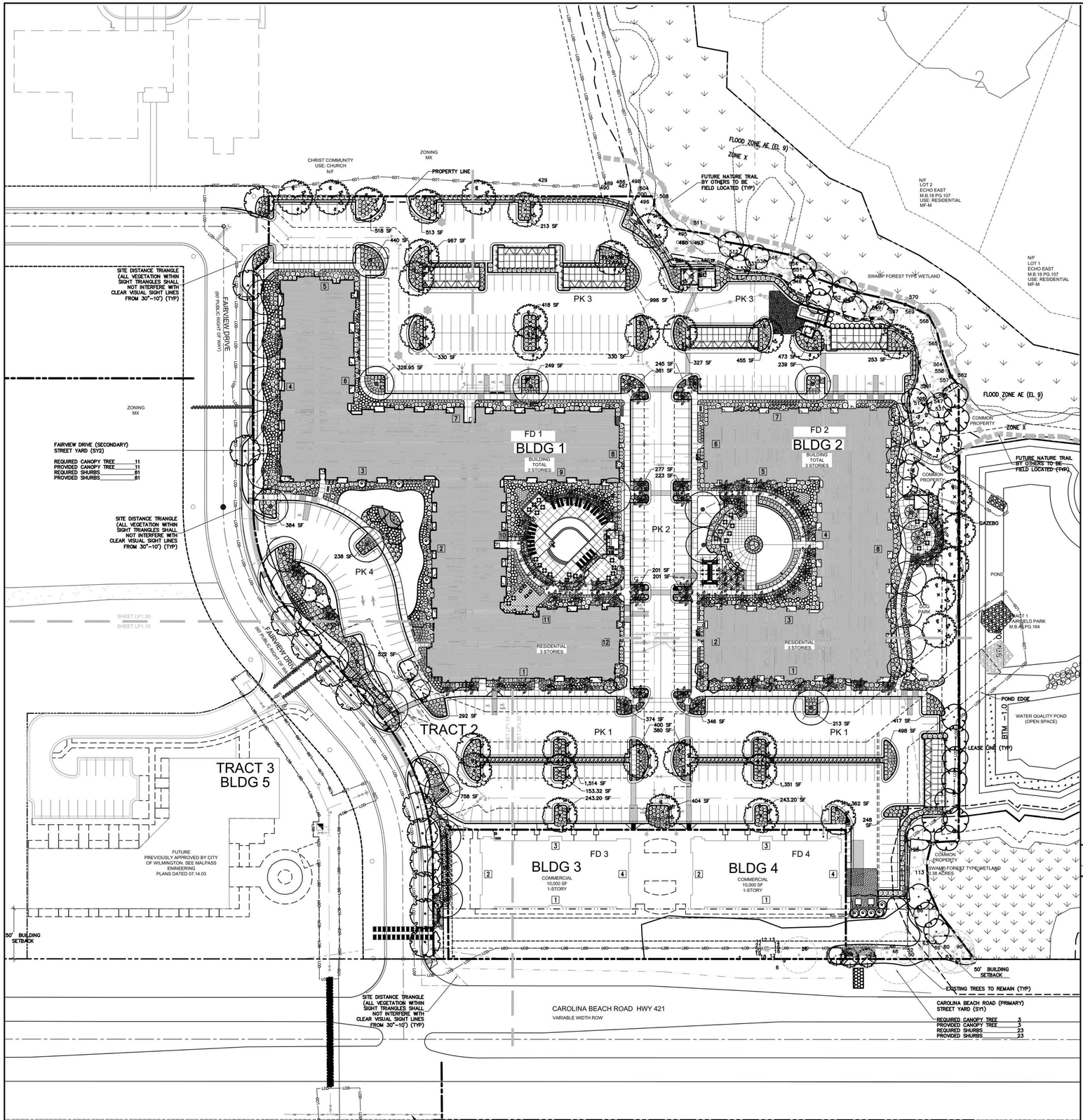

GENERAL:

- TOTAL EXISTING PROTECTED TREES ON SITE 340
- REGULATED TREES = 345
- SIGNIFICANT TREES = 1

TOTAL TREES REQUIRED ON SITE 151
- DISTURBED AREA ACREAGE = 9.29
- 9.29 X 15 = 139.35
- TOTAL TREES PROVIDED ON SITE 285
- EXISTING TREES TO REMAIN = 61
- PROPOSED TREES = 216

TREE REMOVAL AND PRESERVATION:

TOTAL PROTECTED TREES TO BE REMOVED 303
- REGULATED TREES = 285
- SIGNIFICANT TREES = 18

TOTAL SIGNIFICANT TREES CALIPER INCHES TO BE REMOVED 454
TOTAL CALIPER INCHES REQUIRED TO BE MITIGATED 854.5
TOTAL REPLACEMENT TREES REQUIRED 285
- SEE 01/LP0.12 FOR REQUIRED MITIGATION CALCULATIONS

TOTAL CREDIT TOWARD MITIGATION FOR PRESERVED TREES 285
- SEE 01/LP0.12 CHART 3 FOR DETAILS ON CREDIT TOWARD MITIGATION

TOTAL REMAINING TREES REQUIRED FOR MITIGATION 18

NOTES:
- EXISTING REGULATED (NON-SIGNIFICANT) TREES TO BE REMOVED ARE ONLY TO BE REMOVED WITHIN THE LIMITS OF THE AREA OF DISTURBANCE FOR ESSENTIAL SITE IMPROVEMENTS THEREFORE ALL REGULATED TREES LISTED IN THE EXISTING TREE INVENTORY AS "...TO BE REMOVED" ARE EXEMPT FROM MITIGATION.
- SIGNIFICANT TREES TO BE REMOVED ARE NOT EXEMPT AND WILL BE MITIGATED AS REQUIRED.
- SEE TREE REMOVAL PLAN LP0.10 FOR LOCATIONS OF ALL PROTECTED TREES.
- SEE TREE REMOVAL DATA LP0.12 FOR INFORMATION ON EACH INDIVIDUAL TREES.

STREET YARDS

CAROLINA BEACH ROAD (PRIMARY) (SY1)

TOTAL STREET YARD AREA REQUIRED 2,304 SF
- STREET YARD FACTOR X (FRONTAGE LF – DRIVEWAY LF) = MINIMUM STREET YARD AREA REQUIRED
- STREET YARD FACTOR = 18 (ZONED MX)
- TOTAL LOT FRONTAGE = 128
- TOTAL DRIVEWAY FRONTAGE = 0

18 X (128 – 0) = 2,304

TOTAL STREET YARD AREA PROVIDED 2,307 SF
- REFER TO X/LP1.00 FOR DELINEATION OF STREET YARD AREA.
- TOTAL CANOPY TREES REQUIRED 3
- CANOPY TREE PER 600 SF OF STREET YARD
- 2,307 / 600 = 3.85
- TOTAL CANOPY TREES PROVIDED 3
- CANOPY = 4
- TOTAL CANOPY TREES EXISTING 7
- TOTAL UNDERSTORY TREES EXISTING 2
- TREE CREDIT

#46–	6"	DOG	#80–	22"	GUM
#48–	26"	PINE	#83–	18"	PINE
#52–	8"	GUM	#85–	10"	OAK
#63–	2"	DOG	#90–	10"	OAK
#69–	20"	PINE			

TOTAL SHRUBS REQUIRED 23
- 6 SHRUBS PER 600 SF OF STREET YARD
- 2,307 / 600 X 6 = 23.07

TOTAL SHRUBS PROVIDED 23

FAIRVIEW DRIVE (SECONDARY) (SY2)

TOTAL STREET YARD AREA REQUIRED 6,579 SF
- STREET YARD FACTOR X (FRONTAGE LF – DRIVEWAY LF) / 2 = MINIMUM STREET YARD AREA REQUIRED
- STREET YARD FACTOR = 18 (MX)
- TOTAL LOT FRONTAGE = 808
- TOTAL DRIVEWAY FRONTAGE = 77
- 18 X (808 – 77) / 2 = 6,579

TOTAL STREET YARD AREA PROVIDED 6,924 SF
- 162 SF OF STREET YARD IS SIDEWALK
- 162 / 6,924 = 0.02 (2%)
- 15% OF STREETYARD PERMITTED TO BE PEDESTRIAN WALKWAYS
- REFER TO 05/SD1.10 FOR DELINEATION OF STREET YARD AREA.

TOTAL CANOPY TREES REQUIRED 11
- 1 CANOPY TREE PER 600 SF OF STREET YARD
- 6,579 / 600 = 10.96

TOTAL CANOPY TREES PROVIDED 16
- NO CREDIT FOR EXISTING VEGETATION USED. ALL CREDIT USED FOR MITIGATION REQUIREMENTS.

TOTAL SHRUBS REQUIRED 66
- 6 SHRUBS PER 600 SF OF STREET YARD
- 6,579 / 600 X 6 = 65.79

TOTAL SHRUBS PROVIDED 66

PARKING AREAS:

TOTAL INTERIOR AREA LANDSCAPING REQUIRED 13,030 SF
- TOTAL IMPERVIOUS SURFACE OF PARKING AREA = 162,866 SF

162,866 X 0.08 = 13,030

TOTAL INTERIOR AREA LANDSCAPING PROVIDED 17,275 SF
- 75% OF REQUIRED PARKING AREA TREES ARE CANOPY/SHADE SPECIES
- REFER TO LANDSCAPE PLAN 04/LP1.00 FOR INDIVIDUAL LANDSCAPE AREAS AND SQUARE FOOTAGES
- ONE TREE PER ISLAND.

NOTES:
- PROPOSED PARKING FACILITY DOES NOT ABUT ANY STREET RIGHT OF WAYS, SEPARATE PARKING LOTS OR RESIDENTIALLY ZONED PROPERTY THEREFOR NO PERIMETER LANDSCAPE STRIPS ARE REQUIRED.

FOUNDATION PLANTINGS:

TOTAL REQUIRED AREA 8,782 SF
TOTAL PROVIDED AREA 19,508 SF

BUILDING 1 FOUNDATION LANDSCAPE DATA

SIDE	BLDG ELEV AREA	MULTIPLYING FACTOR	REQUIRED	PROVIDED
1	6,279	0.12	754	1,879
2	6,762	0.12	812	1,917
3	5.313	0.12	638	1,649
4	7.314	0.12	878	2,445
5	2,519	0.12	302	760
6	4,486	0.12	539	741
7	9,074	0.12	1,089	2,241
8	2,519	0.12	302	403
9	*NOT ADJACENT TO PARKING FACILITIES OR INTERNAL DRIVE ILSES			
10	4,348	0.12	522	1,152
11	*NOT ADJACENT TO PARKING FACILITIES OR INTERNAL DRIVE ILSES			
12	2,519	0.12	302	374

BUILDING 2 FOUNDATION LANDSCAPE DATA

SIDE	BLDG ELEV AREA	MULTIPLYING FACTOR	REQUIRED	PROVIDED
1	6,279	0.12	753	1,843
2	2,519	0.12	302	525
3	*NOT ADJACENT TO PARKING FACILITIES OR INTERNAL DRIVE ILSES			
4	4,451	0.12	534	1,351
5	*NOT ADJACENT TO PARKING FACILITIES OR INTERNAL DRIVE ILSES			
6	2,519	0.12	302	578
7	6,279	0.12	753	1,651
8	*NOT ADJACENT TO PARKING FACILITIES OR INTERNAL DRIVE ILSES			

BUFFER YARDS:

NOTE: ALL ADJACENT PROPERTY BOUNDARIES EXCLUDING THOSE ALONG FAIRVIEW DRIVE AND CAROLINA BEACH ROAD ARE NOT ABUTTING RESIDENTIALLY ZONED PROPERTY. SAID PROPERTY BOUNDARIES ARE ABUTTING LAND CURRENTLY UNDER THE SAME OVERALL MX DISTRICT PLAN. THEREFORE NO BUFFER YARDS ARE REQUIRED.

MX DISTRICT MINIMUM LANDSCAPING:

CAROLINA BEACH ROAD

TOTAL STREET TREES REQUIRED 3
- ONE TREE PER 50 LF
- 128 LF FRONTAGE / 50 LF = 2.56 TREES

TOTAL STREET TREES PROVIDED 3

FAIRVIEW DRIVE

TOTAL STREET TREES REQUIRED 15
- ONE TREE PER 50 LF
- 731 LF FRONTAGE / 50 LF = 14.62 TREES

TOTAL STREET TREES PROVIDED 16

TOTAL REPLACEMENT TREES REQUIRED 285
(FROM SHEET SD0.12)

TOTAL REPLACEMENT TREES PROVIDED 285
- CANAPY
- UNDERSTORY

NOTES:
- SIGHT DISTANCE TRIANGLES – ALL VEGETATION WITHIN SIGHT TRIANGLES SHALL NOT INTERFERE WITH CLEAR VISUAL SIGHT LINES FROM 30"–10'

LANDSCAPE DATA 03

1. ALL PHASE 1 AND 2 INFORMATION APPROVED BY CITY OF WILMINGTON; SUBMITTED 03.06.2003 AND APPROVED 07.15.2003.
2. ALL PHASE 3 INFORMATION APPROVED BY CITY OF WILMINGTON; SUBMITTED 12.08.2006 AND TRC REVIEW 01.04.2007. PHASE 3 NOT APPROVED. INFORMATION PROVIDED BY TRIPP ENGINEERING DATED 11.08.2007.
3. ADMINISTRATIVE VARIANCE REQUEST FOR 45 PARKING SPACES IN EXCESS OF 500' FROM PUBLIC RIGHT OF WAY. REQUEST DOCUMENTATION ON FILE WITH CITY OF WILMINGTON IN CONJUNCTION WITH INITIAL SUBMITTAL
4. DIMENSIONS ARE FROM BACK OF CURB UNLESS OTHERWISE NOTED.
5. ONCE STREETS ARE OPEN TO TRAFFIC, CONTACT TRAFFIC ENGINEERING TO REQUEST INSTALLATION OF TRAFFIC AND STREET NAME SIGNS.
6. ALL PAVEMENT MARKINGS IN PUBLIC RIGHTS-OF-WAY AND FOR DRIVEWAYS ARE TO BE THERMOPLASTIC AND MEET CITY AND OR NCDOT STANDARDS.
7. ALL TRAFFIC CONTROL SIGNS AND MARKINGS OFF THE RIGHT-OF-WAY ARE TO BE MAINTAINED BY THE PROPERTY OWNER.
8. ALL SIGNS AND PAVEMENT MARKINGS IN AREAS OPEN TO PUBLIC TRAFFIC ARE TO MEET MUTCD (MANUAL ON UNIFORM TRAFFIC CONTROL DEVICES) STANDARDS.
9. ANY BROKEN OR MISSING SIDEWALK PANELS AND CURBING WILL BE REPLACED.

GENERAL NOTES 02

Scale: NTS

For each open utility cut of City streets, a $325 permit shall be required from the City prior to occupancy and/or project acceptance.

STORMWATER MANAGEMENT PLAN
APPROVED
CITY OF WILMINGTON
ENGINEERING DEPARTMENT
DATE _____ PERMIT # _____
SIGNED _____

Approved Construction Plan

	Name	Date
Planning		
Public Utilities		
Traffic		
Fire		

CITY OF WILM. APPROVALS 01

LANDSCAPE PLAN 04

Scale: 1"=50'

CLINE DESIGN
125 N. Harrington St.
Raleigh, NC 27603
919/833-6413
919/836-1280 FAX
ClineDesignAssoc.com

Meridian at Fairfield Park, LLC.

Fairfield Park

4625 & 4544 Fairview Drive
Wilmington, North Carolina

Full Building Set

CLINE DESIGN ASSOCIATES, PA
LANDSCAPE ARCHITECTURE
C-143
RALEIGH, NC

REGISTERED LANDSCAPE ARCHITECT
No. 395
MICHAEL LATTNER
NORTH CAROLINA
5-20-14

PROJECT: 013060
DATE: 03.19.2014

REVISIONS:	DATE
Comments	04-23-2014
Comments	05.20.2014

DRAWN BY: CT
CHECKED BY: MWL

OVERALL LANDSCAPE PLAN

LP1.00

© 2013 CLINE DESIGN ASSOCIATES, PA EXPRESSLY RESERVES ITS COMMON LAW COPYRIGHT AND OTHER PROPERTY RIGHTS IN THESE PLANS. THESE PLANS ARE NOT TO BE REPRODUCED, CHANGED OR COPIED IN ANY FORM OR MANNER WHATSOEVER, NOR ARE THEY TO BE ASSIGNED TO ANY THIRD PARTY WITHOUT FIRST OBTAINING THE EXPRESSED WRITTEN PERMISSION AND CONSENT OF CLINE DESIGN ASSOCIATES, PA.

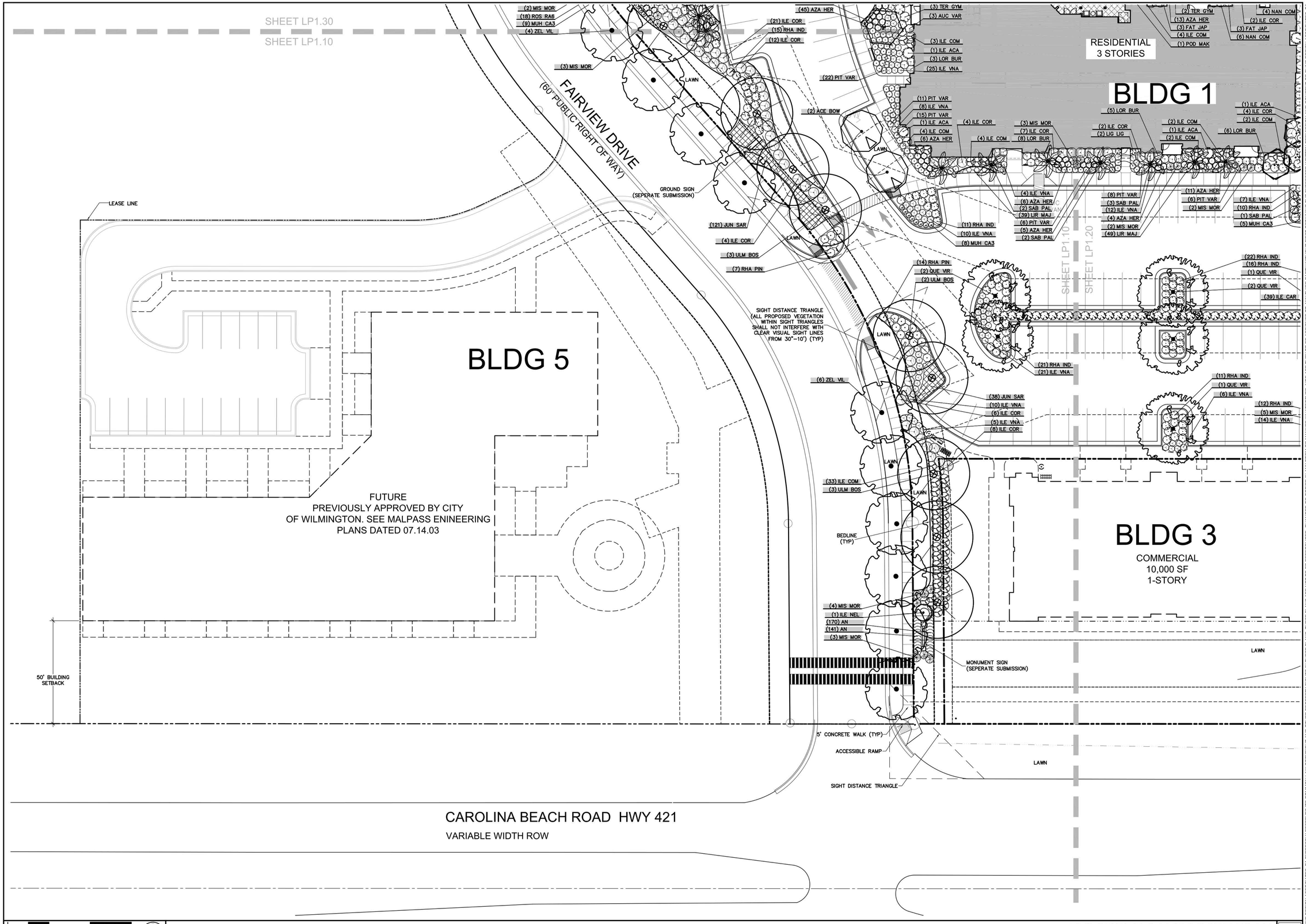

ENLARGED LANDSCAPE PLAN

Scale: 1" = 20'

01

CLINE DESIGN

125 N. Harrington St.
Raleigh, NC 27603
919/833-6413
919/836-1280 FAX
ClineDesignAssoc.com

Meridian at Fairfield Park, LLC.

Fairfield Park

4625 & 4544 Fairview Drive
Wilmington, North Carolina

Full Building Set

CLINE DESIGN ASSOCIATES, PA
C-143
RALEIGH, NC

No. 395
MICHAEL LATTNER
5-20-14

PROJECT: 013060	
DATE: 03.19.2014	
REVISIONS:	DATE
Comments	04-23-2014
Comments	05.20.2014

DRAWN BY:	CT
CHECKED BY:	MWL

ENLARGED
LANDSCAPE PLAN

LP1.10

© 2013 CLINE DESIGN ASSOCIATES, PA EXPRESSLY RESERVES ITS COMMON LAW COPYRIGHT AND OTHER PROPERTY RIGHTS IN THESE PLANS. THESE PLANS ARE NOT TO BE REPRODUCED, CHANGED OR COPIED IN ANY FORM OR MANNER WHATSOEVER, NOR ARE THEY TO BE ASSIGNED TO ANY THIRD PARTY WITHOUT FIRST OBTAINING THE EXPRESSED WRITTEN PERMISSION AND CONSENT OF CLINE DESIGN ASSOCIATES, PA

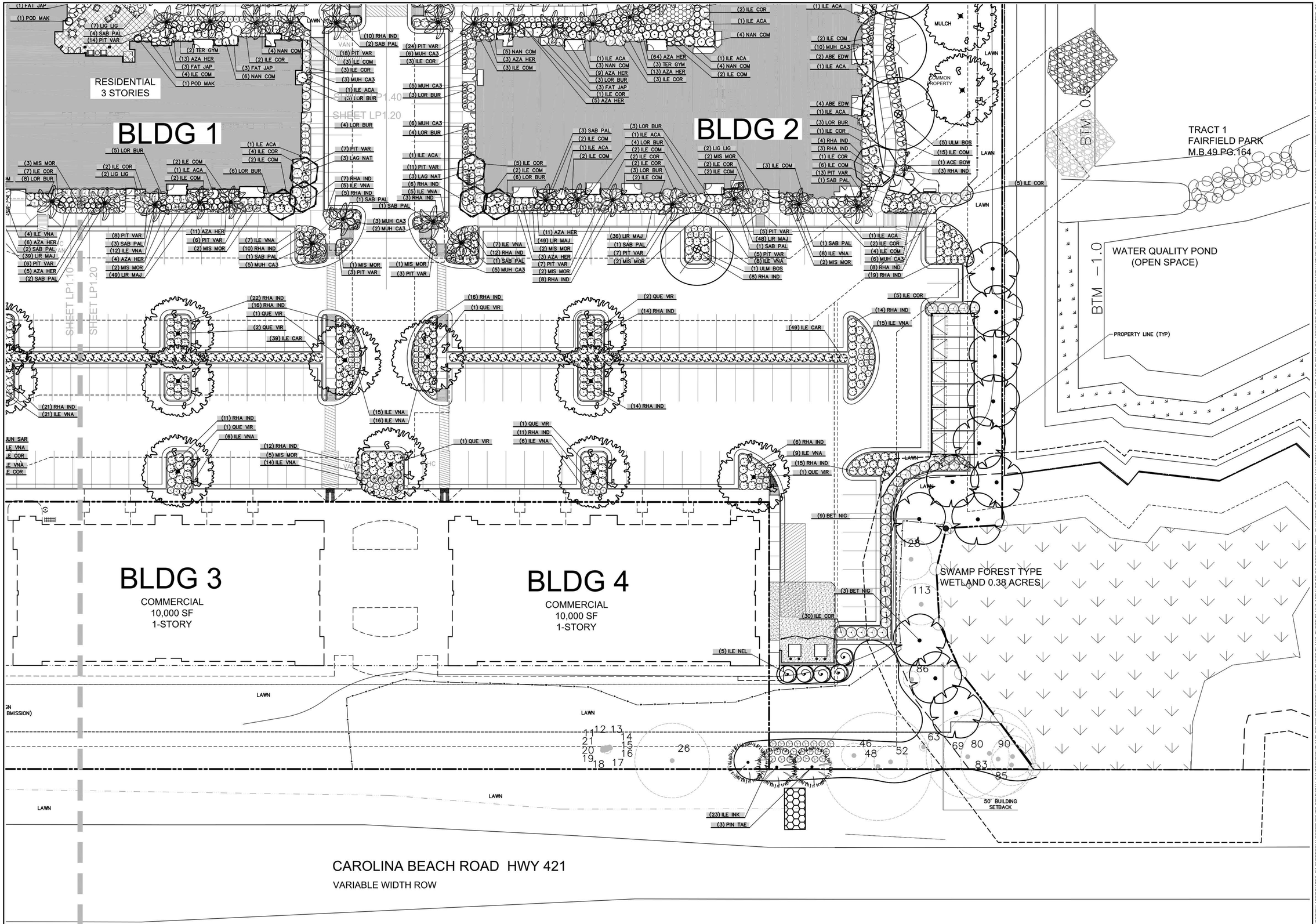

ENLARGED LANDSCAPE PLAN 01

Scale: 1" = 20'

LP1.20

CLINE DESIGN

125 N. Harrington St.
Raleigh, NC 27603
919/833-6413
919/836-1280 FAX
ClineDesignAssoc.com

Meridian at Fairfield Park, LLC.

Fairfield Park

4625 & 4544 Fairview Drive
Wilmington, North Carolina

Full Building Set

CLINE DESIGN ASSOCIATES, PA
LANDSCAPE ARCHITECTURE
ENGINEERING
C-143
RALEIGH, NC

REGISTERED LANDSCAPE ARCHITECT
NORTH CAROLINA
No. 395
MICHAEL LATTNER
5-20-14

PROJECT: 013060
DATE: 03.19.2014

REVISIONS:	DATE
Comments	04-23-2014
Comments	05.20.2014

DRAWN BY: CT
CHECKED BY: MWL

ENLARGED
LANDSCAPE PLAN

© 2013 CLINE DESIGN ASSOCIATES, PA EXPRESSLY RESERVES ITS COMMON LAW COPYRIGHT AND OTHER PROPERTY RIGHTS IN THESE PLANS. THESE PLANS ARE NOT TO BE REPRODUCED, CHANGED OR COPIED IN ANY FORM OR MANNER WHATSOEVER, NOR ARE THEY TO BE ASSIGNED TO ANY THIRD PARTY WITHOUT FIRST OBTAINING THE EXPRESSED WRITTEN PERMISSION AND CONSENT OF CLINE DESIGN ASSOCIATES, PA.

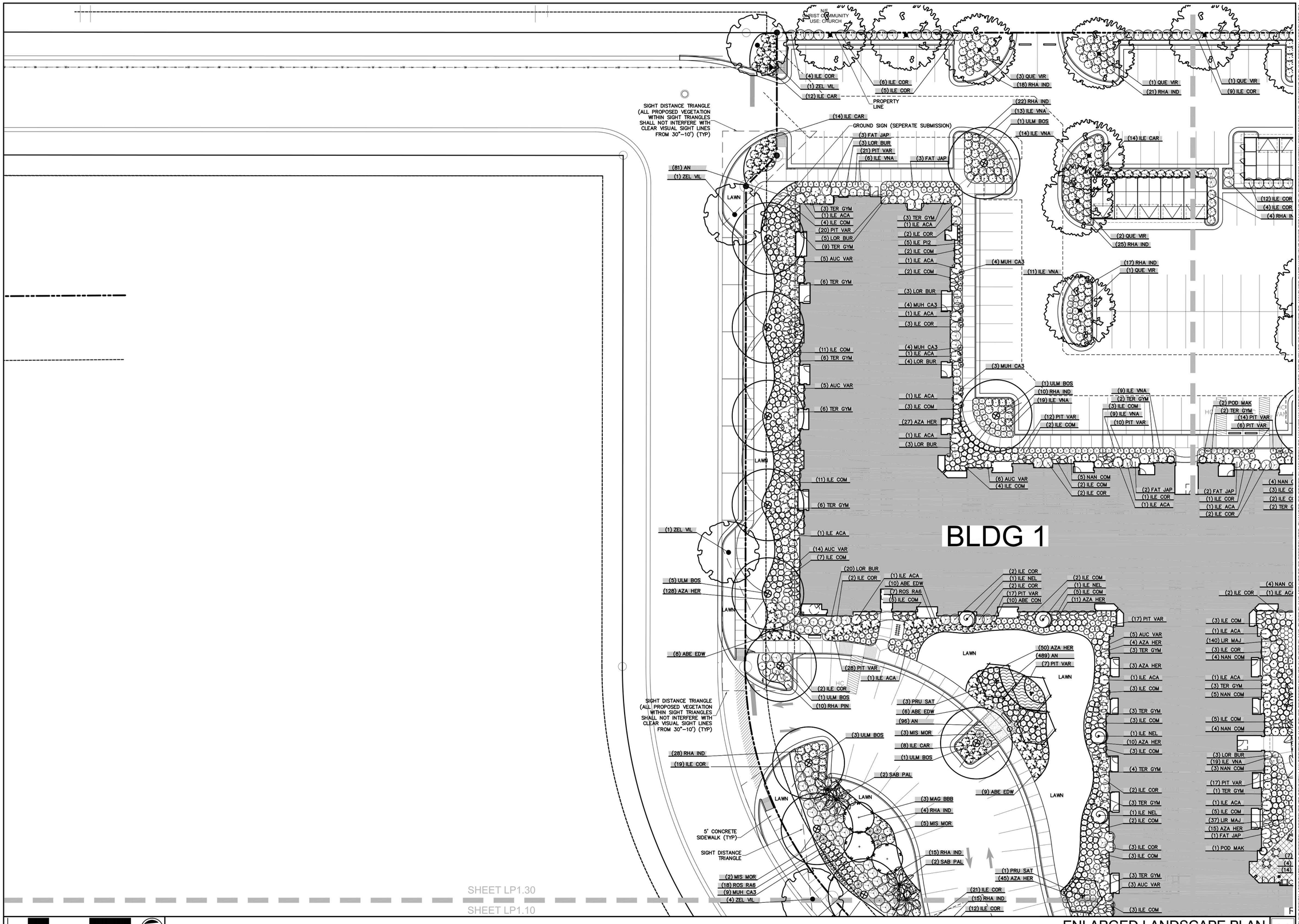

ENLARGED LANDSCAPE PLAN

Scale: 1" = 20'

01

© 2013 CLINE DESIGN ASSOCIATES, PA EXPRESSLY RESERVES ITS COMMON LAW COPYRIGHT AND OTHER PROPERTY RIGHTS IN THESE PLANS. THESE PLANS ARE NOT TO BE REPRODUCED, CHANGED OR COPIED IN ANY FORM OR MANNER WHATSOEVER, NOR ARE THEY TO BE ASSIGNED TO ANY THIRD PARTY WITHOUT FIRST OBTAINING THE EXPRESSED WRITTEN PERMISSION AND CONSENT OF CLINE DESIGN ASSOCIATES, PA.

CLINE DESIGN

125 N. Harrington St.
Raleigh, NC 27603
919/833-6413
919/836-1280 FAX
ClineDesignAssoc.com

Meridian at Fairfield Park, LLC.

Fairfield Park

4625 & 4544 Fairview Drive
Wilmington, North Carolina

Full Building Set

CLINE DESIGN ASSOCIATES, PA
LANDSCAPE ARCHITECTURE
C-143
RALEIGH, NC

NORTH CAROLINA REGISTERED LANDSCAPE ARCHITECT
No. 395
MICHAEL LATTNER
5-20-14

PROJECT: 013060
DATE: 03.19.2014

REVISIONS:	DATE
Comments	04-23-2014
Comments	05.20.2014

DRAWN BY: CT
CHECKED BY: MWL

ENLARGED LANDSCAPE PLAN

LP1.30

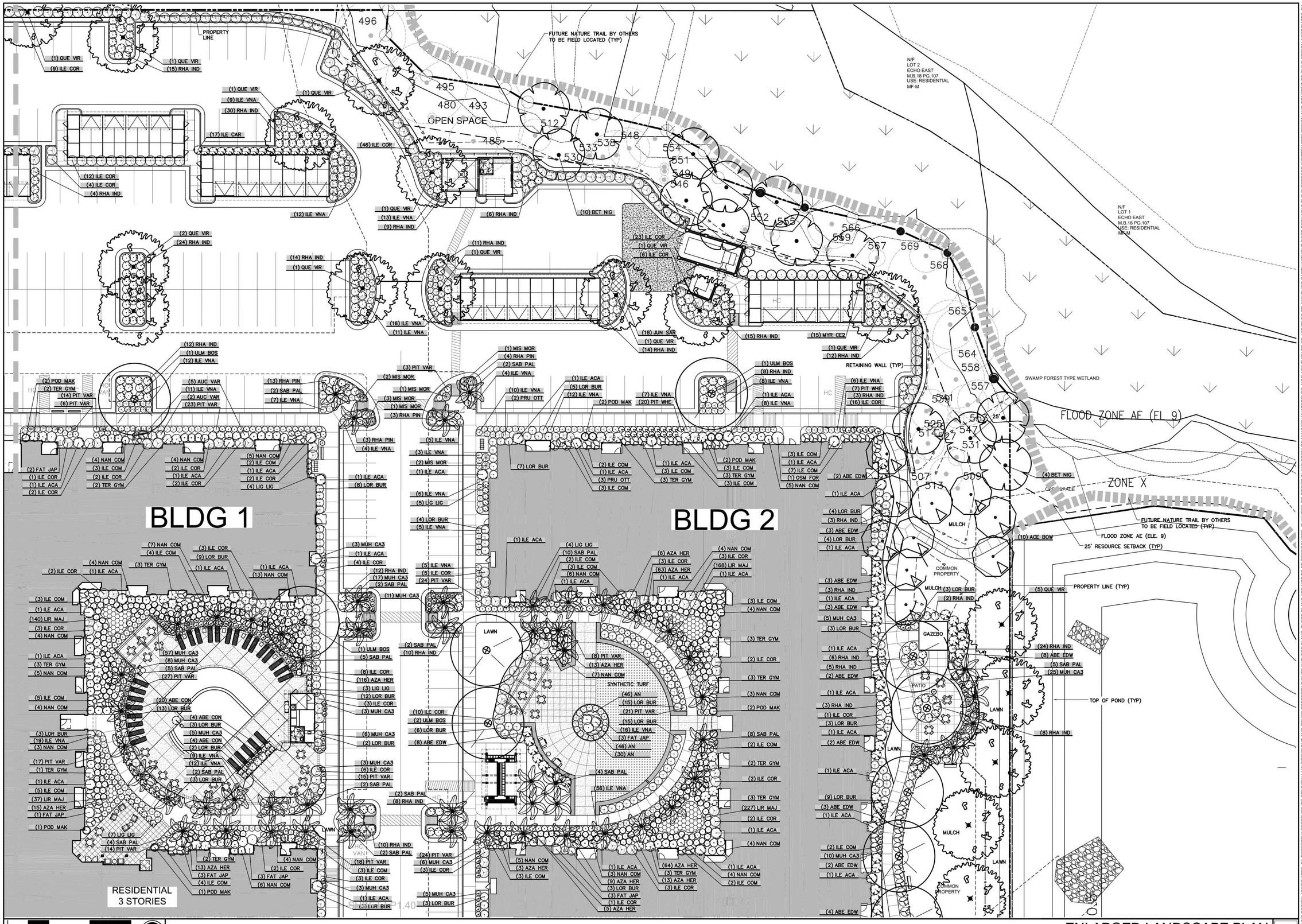

ENLARGED LANDSCAPE PLAN

01

Scale: 1" = 20'

CLINE DESIGN

125 N. Harrington St.
Raleigh, NC 27603
919/833-6413
919/836-1280 FAX
ClineDesignAssoc.com

Meridian at Fairfield Park, LLC.

Fairfield Park

4625 & 4544 Fairview Drive
Wilmington, North Carolina

Full Building Set

CLINE DESIGN ASSOCIATES, PA
LANDSCAPE ARCHITECTURE
C-143
RALEIGH, NC

REGISTERED LANDSCAPE ARCHITECT
No. 395
MICHAEL LATTNER
5-20-14

PROJECT: 013060	
DATE: 03.19.2014	
REVISIONS:	DATE
Comments	04-23-2014
Comments	05.20.2014

DRAWN BY:	CT
CHECKED BY:	MWL

ENLARGED LANDSCAPE PLAN

LP1.40

© 2013 CLINE DESIGN ASSOCIATES, PA EXPRESSLY RESERVES ITS COMMON LAW COPYRIGHT AND OTHER PROPERTY RIGHTS IN THESE PLANS. THESE PLANS ARE NOT TO BE REPRODUCED, CHANGED OR COPIED IN ANY FORM OR MANNER WHATSOEVER, NOR ARE THEY TO BE ASSIGNED TO ANY THIRD PARTY WITHOUT FIRST OBTAINING THE EXPRESSED WRITTEN PERMISSION AND CONSENT OF CLINE DESIGN ASSOCIATES, PA.

1. No plantings over thirty (30) inches in height allowed in vision clearance.
2. Protection from vehicular traffic provided around all landscaping with a minimum height of six (6) inches.
3. Owner is responsible for maintenance to ensure plant material lives and prospers.
4. Planting plans shall be approved by Landscape Designer prior to installation.
5. Landscaping shall be required at the ends of all parking rows.
6. A low buffer shall be required where parking is within fifty (50) feet of the Right-of-Way.
7. Landscaped islands shall be a minimun width of twelve (12) feet (back of curb to back of curb) and a minimum of two hundred and sixteen (216) square feet.
8. A minimum of fifteen (15) trees 2 inches or greater in diameter as measured 6 inches above ground per disturbed acre.
9. For recommended Plant List see "Landscape" T-10.4.

LANDSCAPE NOTES
SD 15-14

CITY OF WILMINGTON LANDSCAPE NOTES 09
NOT TO SCALE

NOTES:
1. SABAL PALMS TO BE BOOTED TO MATCH ADJACENT PALMS
2. SEE PLANS AND SPECS. FOR PALMS WITH BOOTS TO REMAIN ON TRUNK.
3. FINAL TREE STAKING DETAILS AND PLACEMENT TO BE APPROVED BY LANDSCAPE ARCHITECT.
4. CONTRACTOR SHALL ASSURE PERCOLATION OF ALL PLANTING PITS PRIOR TO INSTALLATION.

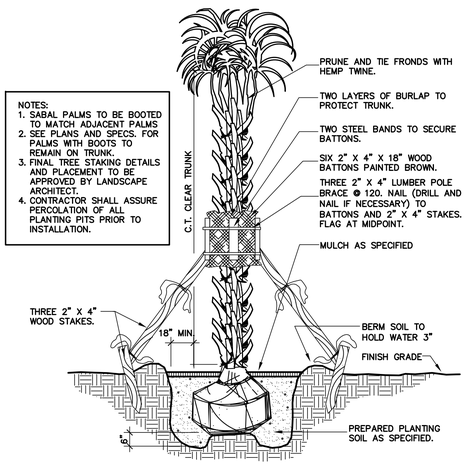

SABAL PALM PLANTING 08
NOT TO SCALE

GENERAL NOTES:
1. SCARIFY SIDES AND BOTTOM OF PLANTING PIT.
2. BACKFILL PLANTING PIT WITH SPECIFIED PLANTING SOIL MIXTURE (OR AMENDED SOIL) IN 6" LAYERS, HAND-TAMPED, TO REMOVE VOIDS.
3. WHEN PLANTING PIT IS 2/3 BACKFILLED, WATER MATERIAL.
4. AFTER PLACING AND HAND-TAMPING FINAL LAYERS, WATER AGAIN UNTIL NO MORE IS ABSORBED.

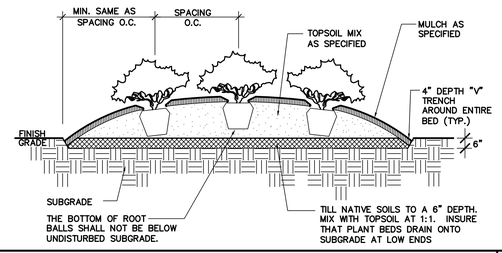

TYPICAL SHRUB PLANTING 06
NOT TO SCALE

GENERAL NOTES:
1. PLANT SO THAT TOP OF ROOT BALL IS 2" ABOVE FINISH GRADE.
2. SCARIFY SIDES AND BOTTOM OF PLANTING PIT.
3. BACKFILL TREE PIT WITH SPECIFIED PLANTING SOIL MIXTURE (OR AMENDED SOIL) IN 6" LAYERS, HAND-TAMPED, TO REMOVE VOIDS.
4. WHEN PLANTING PIT IS 2/3 BACKFILLED, WATER MATERIAL.
5. AFTER PLACING AND HAND-TAMPING FINAL LAYERS, WATER AGAIN UNTIL NO MORE IS ABSORBED.
6. STAKE AND GUY TREES IF APPLICABLE. (TREES 3" CALIPER AND LARGER OR IN WINDY CONDITIONS AS DIRECTED BY LANDSCAPE ARCHITECT.)
7. DO NOT WRAP TREE TRUNKS.

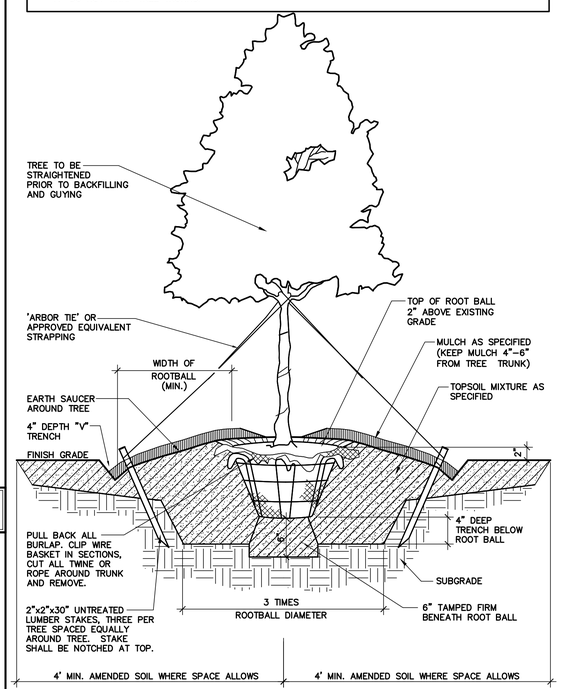

TYPICAL TREE PLANTING 05
NOT TO SCALE

THE OWNERS SHALL BE RESPONSIBLE FOR ANNUAL MAINTENANCE OF THE VEGETATION TO INCLUDE BUT NOT LIMITED TO:

A. FERTILIZATION – ALL FESCUE TURFGRASS IS FERTILIZED AT THE TIME OF RENOVATION, TYPICALLY DURING THE LAST WEEK OF SEPTEMBER OR THE FIRST WEEK OF OCTOBER WITH 3/4 LB. NITROGEN, 1 LB PHOSPHOROUS, 1/2 LB POTASH PER 1000 SQ. FT. ONE MONTH LATER WE FERTILIZE AGAIN WITH 1 LB. NITROGEN, A TRACE OF PHOSPHOROUS AND 1 LB. POTASH PER 1000 SQ. FT. THE SAME FERTILIZER AND RATES ARE APPLIED AGAIN IN FEBRUARY. TREES AND SHRUBBERY ARE FERTILIZED WITH AN ORGANIC FERTILIZER AT THE TIME OF PLANTING. ALL SHRUBS AND RECENTLY PLANTED TREES ARE FERTILIZED IN JANUARY WITH A COATED SLOW RELEASE FERTILIZER (12-14-14) AT THE APPROXIMATE RATE OF 1 LB. OF ACTUAL NUTRIENT PER 1000 SQ. FT.

B. PRUNING – TYPICALLY TREES ARE PRUNED ONLY TO REPAIR DAMAGE OR TO CORRECT FAULTS. HEDGES AND SHAPED SHRUBS ARE TYPICALLY PRUNED TWICE DURING THE GROWING SEASON. OVERGROWN SHRUBS ARE PRUNED IN THE SPRING AND JUST PRIOR TO THE FIRST GROWTH FLUSH.

C. PEST CONTROL – INSECTS ARE TREATED AS NECESSARY. LANDSCAPE CONTRACTOR FOR MAINTENANCE SHALL RECOMMEND PRODUCTS.

D. MULCHING – THE IMMEDIATE ROOT ZONES OF ALL TREES AND SHRUBS ARE MULCHED WITH SHREDDED HARDWOOD MULCH 3" THICK. SEASONAL COLOR BEDS ARE MULCHED WITH PINE BARK MULCH TO A DEPTH OF 1/4" TO 1/2".

E. MOWING – FESCUE LAWNS ARE MOWED ONCE WEEKLY, OCTOBER THRU FEBRUARY. MARCH THRU JUNE THEY ARE MOWED TWICE WEEKLY. JULY THRU SEPTEMBER MOWING IS DONE ONE EVERY FIVE TO SEVEN DAYS.

F. OTHER CONTINUING MAINTENANCE OPERATIONS WOULD INCLUDE SEASONAL COLOR PLANTINGS (FLOWERS). THESE PLANTINGS ARE DONE TWICE ANNUALLY, IN MAY AND AGAIN IN OCTOBER. THE PREVIOUS SEASONS FLOWERS ARE PULLED, THE BEDS ARE LIMED ACCORDING TO SOIL TEST RECOMMENDATIONS, FERTILIZED WITH ORGANIC FERTILIZER, PLANTED, MULCHED, WATERED, AND TREATED WITH A PRE-EMERGENT HERBICIDE.

LANDSCAPE MAINTENANCE NOTES 04
NOT TO SCALE

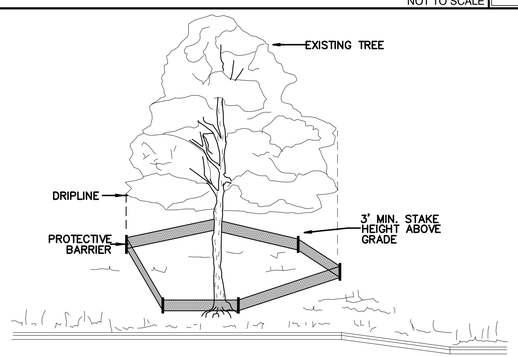

NOTE:
TREES TO BE SAVED WILL BE CLEARLY MARKED PRIOR TO CONSTRUCTION AND A PROTECTIVE BARRIER IS TO BE INSTALLED AT THE DRIPLINE.
DRIP LINE – THE AREA OF SOIL DIRECTLY BENEATH THE TREE EXTENDING OUT TO THE TIPS OF THE OUTERMOST BRANCHES.

METHOD OF TREE PROTECTION DURING CONSTRUCTION
SD 15-08
NOT TO SCALE

TREE PROTECTION FENCING 07
NOT TO SCALE

GENERAL NOTES:
1. THOROUGHLY TILL IN PLANTING MIXTURE AMENDMENTS TO A DEPTH OF 8" IN ENTIRE BED AREA.
2. WORK SOIL TO A LOOSE, UNIFORM TEXTURE.
3. HAND-TAMP BACKFILL TO REMOVE VOIDS/AIR POCKETS.
4. WATER IMMEDIATELY AFTER INSTALLATION UNTIL NO MORE WATER IS ABSORBED.

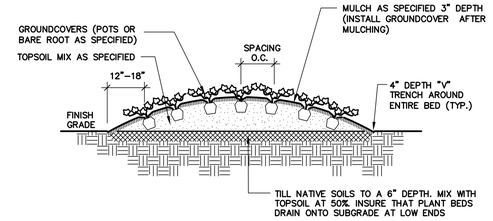

TYPICAL GROUNDCOVER PLANTING 03
NOT TO SCALE

1. VERIFICATION OF TOTAL LANDSCAPE MATERIAL QUANTITIES AS SHOWN ON THE LANDSCAPE PLANS AND IN THE PLANT LIST SHALL BE THE RESPONSIBILITY OF THE LANDSCAPE CONTRACTOR. THE LANDSCAPE ARCHITECT SHALL BE NOTIFIED OF ANY DISCREPANCIES PRIOR TO FINAL BIDDING OR INSTALLATION.
2. ALL LANDSCAPE MATERIALS SHALL CONFORM TO THE ACCEPTED STANDARDS ESTABLISHED BY THE AMERICAN ASSOCIATION OF NURSERYMEN.
3. LANDSCAPE MATERIAL PLACED IN PREPARED HOLES SHALL BE PROPERLY BACKFILLED PRIOR TO THE END OF THE WORKING DAY.
4. ALL SAUCERS SHALL BE SOAKED WITH WATER AND MULCHED IMMEDIATELY FOLLOWING INSTALLATION.
5. ALL PREPARED GROUND COVER AND ANNUAL BED INSTALLATIONS SHALL BE PROPERLY SOAKED AND MULCHED PRIOR TO THE END OF THE DAY.
6. LANDSCAPE ARCHITECT SHALL APPROVE ANY ON-SITE PLANT STORAGE AREA FOR ACCESSIBILITY, SHADE CONDITIONS, HEALING-IN MULCH MATERIAL AND TEMPORARY WATERING METHODS.
7. ALL ROOT BALLS REMOVED FROM CONTAINERS SHALL BE SCARIFIED BY HAND PRIOR TO PLACEMENT AND BACK FILLING WITH PREPARED SOILS. HAND TOOLS ARE NOT TO BE USED TO SCARIFY ROOT BALLS.
8. ALL ROPE AND WRAPPING TWINE SHALL BE CUT AND REMOVED FROM AROUND THE UPPER PARTS OF THE ROOT BALL. METAL BASKET WIRES AND BURLAP SHALL BE PULLED BACK AND TUCKED UNDER THE EDGES OF THE SAUCER RINGS ON ALL TREES AND LARGE SHRUBS. ALL SYNTHETIC BURLAP SHALL BE REMOVED FROM PLANT BALLS PRIOR TO BACK FILLING.
9. ALL PLANT BEDS OR RAISED SAUCER RINGS SHALL BE EDGED WITH SMOOTH, CONTINUOUS CURVES. PINE STRAW MULCH, IF SPECIFIED, SHALL BE ROLLED AND TUCKED ALONG PLANT BED EDGE.
10. ALL PLANT MATERIAL SHALL BE PLANTED AT HEIGHTS AS ILLUSTRATED IN PLANT DETAILS.
11. TREE GUYING SHALL BE PERFORMED WITHIN A WEEK OF PLANTING. THE LANDSCAPE CONTRACTOR SHALL BE RESPONSIBLE FOR REMOVING ALL TREE GUYING STRAPPING AND STAKES AFTER THE FIRST FULL GROWING SEASON OR ONE YEAR, WHICH EVER COMES FIRST.
12. CONTRACTOR SHALL VERIFY LOCATIONS OF UNDERGROUND UTILITIES PRIOR TO PLANTING. ANY EXPOSED OR UNCOVERED LINES SHALL BE SHOWN TO GENERAL CONTRACTOR PRIOR TO BACKFILLING.
13. ALL PLANT BEDS AND RAISED SAUCER RINGS SHALL BE GRADED TO PROVIDE ADEQUATE DRAINAGE AND SHALL BE MULCHED AS SPECIFIED.
14. ALL MATERIALS, PLANTING AND LANDSCAPE WORK SHALL CONFORM TO THE CURRENT MUNICIPAL AUTHORITY'S STANDARD SPECIFICATIONS AND DETAILS.
15. ALL LANDSCAPE AREAS THAT ARE NOT PLANTED AND MULCHED OR PAVED SHALL BE SEEDED OR SODDED.
16. TREE PROTECTION FENCE SHALL BE INSTALLED, INSPECTED AND APPROVED PRIOR TO THE ISSUANCE OF ANY GRADING OR OTHER PERMITS.
17. FIRST YEAR PRUNING OF TREE CROWN SHALL BE LIMITED TO REMOVAL OF DEAD & DAMAGED WOOD.
18. TREE PROTECTION FENCE SHALL BE INSTALLED, INSPECTED AND APPROVED PRIOR TO CLEARING, GRADING, AND CONSTRUCTION ACTIVITY OR THE ISSUANCE OF ANY RELATED PERMITS. NO CONSTRUCTION WORKERS, TOOLS, MATERIALS OR VEHICLES ARE PERMITTED WITHIN THE TREE PROTECTION FENCING.
19. MULCH LINE SMOOTH CONTINUOUS CURVES. CLEAR OUT FIRST 5' FROM DEBRIS AND UNDERBRUSH (TYP) AT AREAS OF EXISTING VEGETATION TO REMAIN.
20. ALL TREES NOT WITHIN A PLANT BED TO BE TREATED WITH A 6' DIAMETER MULCH RING (TYP).

GENERAL LANDSCAPE NOTES 02
NOT TO SCALE

PLANT SCHEDULE - BUFFERS & YARDS

PLANT SCHEDULE

TREES	QTY	FD1	FD2	FD3	FD4	OVERALL PLANT SCHEDULE	PK1	PK2	PK3	PK4	SY1	SY2	BOTANICAL NAME	COMMON NAME	CAL	HT.	SPR.	REMARKS
ACE BOW	13		4			9							ACER RUBRUM 'BOWHALL'	BOWHALL RED MAPLE	2.5"	10'-12'	4'-6'	B&B (CANOPY)
BET NIG	26					26							BETULA NIGRA	RIVER BIRCH	3"	14-16'	10-12'	
ILE ACA	55	28	27										ILEX X AQUIPERNYI 'CAROLILNA SENTINEL'	CAROLINA SENTINEL HOLLY	–	8'	3'-5'	FULL TO GROUND
ILE NEL	10	4				6							ILEX X ATTENUATA 'NELLIE R. STEVENS'	NELLIE STEVENS HOLLY	–	8-10'	4-6'	FULL HEAD, MATCHE
LAG NAT	6	3	3										LAGERSTROEMIA FAURIEI 'NATCHEZ'	NATCHEZ WHITE CRAPE MYRTLE	2-2.5" CAL	8-10' HT	6-8' SPD	FULL HEAD, MATCHE
MAG BBB	3					3							MAGNOLIA GRANDIFLORA 'BRACKEN'S BROWN BEAUTY'	BRACKEN'S BROWN BEAUTY MAGNOLIA	3.5"	14-16'	6-8'	FULL, MATCHED
PIN TAE	3					3							PINUS TAEDA	LOBLOLLY PINE	3"-3.5" CAL	14-16' HT	6-8' SPD	FULL HEAD, MATCHE
PRU SAT	4	1				3							PRUNUS X OKAME	OKAME CHERRY	1-1.5"	7'-8'	6'-8'	FULL HEAD, MATCHE
QUE VIR	36		4			32							QUERCUS VIRGINIANA	SOUTHERN LIVE OAK	3-3.5" CAL	14-16' HT	8-10' SPD	FULL HEAD, MATCHE
SAB PAL	79	25	33			21							SABAL PALMETTO	PALMETTO	–	16' HT	6' SPD	FULL HEAD, MATCHE
ULM BOS	31	1	6			24							ULMUS PARVIFOLIA 'BOSQUE'	BOSQUE ELM	2.5"	12'-14'	8'-10'	FULL, MATCHED
ZEL VIL	13					13							ZELKOVA SERRATA 'VILLAGE GREEN'	VILLAGE GREEN ZELKOVA	2.5"	12'-14'	6'-8'	FULL, MATCHED

SHRUBS	QTY	FD1	FD2	FD3	FD4	OVERALL PLANT SCHEDULE	PK1	PK2	PK3	PK4	SY1	SY2	BOTANICAL NAME	COMMON NAME	HT.	SPR.	REMARKS
ABE EDW	73	12	32			29							ABELIA GRANDIFLORA 'EDWARD GOUCHER'	EDWARD GOUCHER ABELIA	18"-24"	18"-24"	FULL
ABE CON	38	38											ABELIA GRANDIFLORA 'KALEIDOSCOPE'	KALEIDOSCOPE ABELIA	12"-15"	18-28"	
AUC VAR	45	43				2							AUCUBA JAPONICA 'NANA VARIEGATA'	JAPANESE AUCUBA	24"-38"	18"-24"	
AZA HER	644	285	190			169							AZALEA KURUME HYBRID 'HERSHEY RED'	KURUME AZALEA	18"-24"	18"-24"	
FAT JAP	23	17	6										FATSIA JAPONICA	JAPANESE FATSIA	24-36"	24-36"	
ILE CAR	153					153							ILEX CORNUTA CARISSA	CARISSA HOLLY	24-36"	24-36"	
ILE COR	374	81	55			238							ILEX CORNUTA 'NEEDLEPOINT'	NEEDLEPOINT HOLLY	24-36" HT	24-36" SPD	6' SPACING O.C.
ILE COM	237	122	81			34							ILEX CRENATA 'COMPACTA'	DWARF JAPANESE HOLLY	18"-24"	18"-24" SPD	4' SPACING O.C.
ILE PI2	5	5											ILEX CRENATA 'SKY PENCIL'	PICCOLO JAPANESE HOLLY	18-28"	8-12"	FULL, 2' OC.
ILE INK	23					23							ILEX GLABRA 'COMPACTA'	COMPACT INKBERRY	18-24" HT	12-18" SPD	4' SPACING O.C.
ILE VNA	583	137	142			304							ILEX VOMITORIA 'NANA'	DWARF YAUPON	12"-18"	12-18"	3' SPACING O.C.
LIG LIG	27	16	11										LIGUSTRUM JAPONICUM ROTUNDIFOLIUM	CURLYLEAF LIGUSTRUM	24"-36" HT	24"-36" SPD	
LOR BUR	229	118	104			7							LOROPETALUM CHINENSE RUBRUM 'BURGUNDY'	BURGUNDY LOROPETALUM	18-24" HT	18-24" SPD	FULL, MATCHED, 5'
MIS MOR	54	7	12			35							MISCANTHUS SINENSIS 'MORNING LIGHT'	MORNING LIGHT SILVER GRASS	24"-36" HT	18"-24" SPD	3' SPACING O.C.
MUH CA3	226	103	68			63							MUHLENBERGIA CAPILLARIS	PINK MUHLY	15"-18"	15"-18"	2 GAL.
MYR CE2	15					15							MYRICA CERIFERA	WAX MYRTLE	24-36"	20-28"	FULL, MATCHED
NAN COM	113	68	45										NANDINA DOMESTICA 'COMPACTA'	DWARF HEAVENLY BAMBOO	24"-36" HT	24"-36" SPD	
OSM FOR	1		1										OSMANTHUS X FORTUNEI	FORTUNE'S OSMANTHUS	30-36"	20-22"	
PIT VAR	475	326	125			24							PITTOSPORUM TOBIRA 'TURNERS'S VARIEGATED DWARF'	DWARF PITTOSPORUM	12"-18"	12"-18"	
PIT WHE	27		27										PITTOSPORUM TOBIRA 'WHEELERS DWARF'	WHEELER'S DWARF MOCK ORANGE	12"-18"	12"-18"	3' SPACING O.C.
POD MAK	10	4	6										PODOCARPUS MACROPHYLLUS 'MAKI'	SHRUBBY YEW	36"	24"-36" SPD	
PRU OTT	5		5										PRUNUS LAUROCERASUS 'OTTO LUYKEN'	LUYKENS LAUREL	18"-24"	24-36"	
RHA IND	725	9	75			641							RHAPHIOLEPIS INDICA	INDIAN HAWTHORN	18"-24"	18"-24"	4' SPACING O.C.
RHA PIN	54					54							RHAPHIOLEPIS UMBELLATA 'PINKIE'	PINK INDIAN HAWHORNE	24"-38"	24"-38"	FULL
ROS RA6	25	7				18							ROSA PINK KNOCK OUT 'RADCON' PPAF	PINK KNOCK OUT ROSE	18"-24"	18"-24"	
TER GYM	90	63	20			7							TERNSTROEMIA GYMNANTHERA 'BRONZE BEAUTY' PP#11735	JAPANESE CLEYERA	18-24"	18"-24"	FULL TO GROUND

GROUND COVERS	QTY	FD1	FD2	FD3	FD4	OVERALL PLANT SCHEDULE	PK1	PK2	PK3	PK4	SY1	SY2	BOTANICAL NAME	COMMON NAME	CONT	HT.	SPR.	SPACING	REMARKS
AN	1,099		122			977							ANNUALS	ANNUALS	FLAT			8" o.c.	SEASONAL COLOR
JUN SAR	177					177							JUNIPERUS CHINENSIS SARGENTII	SARGENT JUNIPER	4" POT			24" o.c.	FULL, MATCHED, 3"
LIR MAJ	793	265	528										LIRIOPE MUSCARI 'MAJESTIC'	MAJESTIC LIRIOPE	1 GAL			12" o.c.	

PLANT SCHEDULE OVERALL PLANT SCHEDULE

TREES	QTY	BOTANICAL NAME	COMMON NAME	CAL	HT.	SPR.	REMARKS
ACE BOW	13	ACER RUBRUM 'BOWHALL'	BOWHALL RED MAPLE	2.5"	10'-12'	4'-6'	B&B (CANOPY)
BET NIG	26	BETULA NIGRA	RIVER BIRCH	3"	14-16'	10-12'	
ILE ACA	55	ILEX X AQUIPERNYI 'CAROLILNA SENTINEL'	CAROLINA SENTINEL HOLLY	–	8'	3'-5'	FULL TO GROUND
ILE NEL	10	ILEX X ATTENUATA 'NELLIE R. STEVENS'	NELLIE STEVENS HOLLY	–	8-10'	4-6'	FULL HEAD, MATCHED
LAG NAT	6	LAGERSTROEMIA FAURIEI 'NATCHEZ'	NATCHEZ WHITE CRAPE MYRTLE	2-2.5" CAL	8-10' HT	6-8' SPD	FULL HEAD, MATCHED, 3 TRUNK MIN. LIMBED UP
MAG BBB	3	MAGNOLIA GRANDIFLORA 'BRACKEN'S BROWN BEAUTY'	BRACKEN'S BROWN BEAUTY MAGNOLIA	3.5"	14-16'	6-8'	FULL, MATCHED
PIN TAE	3	PINUS TAEDA	LOBLOLLY PINE	3"-3.5" CAL	14-16' HT	6-8' SPD	FULL HEAD, MATCHED
PRU SAT	4	PRUNUS X OKAME	OKAME CHERRY	1-1.5"	7'-8'	6'-8'	FULL HEAD, MATCHED
QUE VIR	36	QUERCUS VIRGINIANA	SOUTHERN LIVE OAK	3-3.5" CAL	14-16' HT	8-10' SPD	FULL HEAD, MATCHED
SAB PAL	79	SABAL PALMETTO	PALMETTO	–	16' HT	6' SPD	FULL HEAD, MATCHED
ULM BOS	31	ULMUS PARVIFOLIA 'BOSQUE'	BOSQUE ELM	2.5"	12'-14'	8'-10'	FULL, MATCHED
ZEL VIL	13	ZELKOVA SERRATA 'VILLAGE GREEN'	VILLAGE GREEN ZELKOVA	2.5"	12'-14'	6'-8'	FULL, MATCHED

SHRUBS	QTY	BOTANICAL NAME	COMMON NAME	HT.	SPR.	REMARKS
ABE EDW	73	ABELIA GRANDIFLORA 'EDWARD GOUCHER'	EDWARD GOUCHER ABELIA	18"-24"	18"-24"	FULL
ABE CON	38	ABELIA GRANDIFLORA 'KALEIDOSCOPE'	KALEIDOSCOPE ABELIA	12"-15"	18-28"	
AUC VAR	45	AUCUBA JAPONICA 'NANA VARIEGATA'	JAPANESE AUCUBA	24"-38"	18"-24"	
AZA HER	644	AZALEA KURUME HYBRID 'HERSHEY RED'	KURUME AZALEA	18"-24"	18"-24"	
FAT JAP	23	FATSIA JAPONICA	JAPANESE FATSIA	24-36"	24-36"	
ILE CAR	153	ILEX CORNUTA CARISSA	CARISSA HOLLY	24-36"	24-36"	
ILE COR	374	ILEX CORNUTA 'NEEDLEPOINT'	NEEDLEPOINT HOLLY	24-36" HT	24-36" SPD	6' SPACING O.C.
ILE COM	237	ILEX CRENATA 'COMPACTA'	DWARF JAPANESE HOLLY	18"-24"	18"-24" SPD	4' SPACING O.C.
ILE PI2	5	ILEX CRENATA 'SKY PENCIL'	PICCOLO JAPANESE HOLLY	18-28"	8-12"	FULL, 2' OC.
ILE INK	23	ILEX GLABRA 'COMPACTA'	COMPACT INKBERRY	18-24" HT	12-18" SPD	4' SPACING O.C.
ILE VNA	583	ILEX VOMITORIA 'NANA'	DWARF YAUPON	12"-18"	12-18"	3' SPACING O.C.
LIG LIG	27	LIGUSTRUM JAPONICUM ROTUNDIFOLIUM	CURLYLEAF LIGUSTRUM	24"-36" HT	24"-36" SPD	
LOR BUR	229	LOROPETALUM CHINENSE RUBRUM 'BURGUNDY'	BURGUNDY LOROPETALUM	18-24" HT	18-24" SPD	FULL, MATCHED, 5' O.C.
MIS MOR	54	MISCANTHUS SINENSIS 'MORNING LIGHT'	MORNING LIGHT SILVER GRASS	24"-36" HT	18"-24" SPD	3' SPACING O.C.
MUH CA3	226	MUHLENBERGIA CAPILLARIS	PINK MUHLY	15"-18"	15"-18"	2 GAL.
MYR CE2	15	MYRICA CERIFERA	WAX MYRTLE	24-36"	20-28"	FULL, MATCHED
NAN COM	113	NANDINA DOMESTICA 'COMPACTA'	DWARF HEAVENLY BAMBOO	24"-36" HT	24"-36" SPD	
OSM FOR	1	OSMANTHUS X FORTUNEI	FORTUNE'S OSMANTHUS	30-36"	20-22"	
PIT VAR	475	PITTOSPORUM TOBIRA 'TURNERS'S VARIEGATED DWARF'	DWARF PITTOSPORUM	12"-18"	12"-18"	
PIT WHE	27	PITTOSPORUM TOBIRA 'WHEELERS DWARF'	WHEELER'S DWARF MOCK ORANGE	12"-18"	12"-18"	3' SPACING O.C.
POD MAK	10	PODOCARPUS MACROPHYLLUS 'MAKI'	SHRUBBY YEW	36"	24"-36" SPD	
PRU OTT	5	PRUNUS LAUROCERASUS 'OTTO LUYKEN'	LUYKENS LAUREL	18"-24"	24-36"	
RHA IND	725	RHAPHIOLEPIS INDICA	INDIAN HAWTHORN	18"-24"	18"-24"	4' SPACING O.C.
RHA PIN	54	RHAPHIOLEPIS UMBELLATA 'PINKIE'	PINK INDIAN HAWHORNE	24"-38"	24"-38"	FULL
ROS RA6	25	ROSA PINK KNOCK OUT 'RADCON' PPAF	PINK KNOCK OUT ROSE	18"-24"	18"-24"	
TER GYM	90	TERNSTROEMIA GYMNANTHERA 'BRONZE BEAUTY' PP#11735	JAPANESE CLEYERA	18-24"	18"-24"	FULL TO GROUND

GROUND COVERS	QTY	BOTANICAL NAME	COMMON NAME	CONT	HT.	SPR.	SPACING	REMARKS
AN	1,099	ANNUALS	ANNUALS	FLAT			8" o.c.	SEASONAL COLOR
JUN SAR	177	JUNIPERUS CHINENSIS SARGENTII	SARGENT JUNIPER	4" POT			24" o.c.	FULL, MATCHED, 3"-6" HT 12-15" SPD
LIR MAJ	793	LIRIOPE MUSCARI 'MAJESTIC'	MAJESTIC LIRIOPE	1 GAL			12" o.c.	

OTHER

LAWN – ZOYSIA SOD

MULCH (IN PLANT BEDS) – TRIPLE SHREADDED HARDWOOD

MULCH (IN DOG PARK) – TO BE SELECTED BY OWNER

PLANT SCHEDULE 01
NOT TO SCALE

© 2013 CLINE DESIGN ASSOCIATES, PA EXPRESSLY RESERVES ITS COMMON LAW COPYRIGHT AND OTHER PROPERTY RIGHTS IN THESE PLANS. THESE PLANS ARE NOT TO BE REPRODUCED, CHANGED OR COPIED IN ANY FORM OR MANNER WHATSOEVER, NOR ARE THEY TO BE ASSIGNED TO ANY THIRD PARTY WITHOUT FIRST OBTAINING THE EXPRESSED WRITTEN PERMISSION AND CONSENT OF CLINE DESIGN ASSOCIATES, PA.

CLINE DESIGN
125 N. Harrington St.
Raleigh, NC 27603
919/833-6413
919/836-1280 FAX
ClineDesignAssoc.com

Meridian at Fairfield Park, LLC.
Fairfield Park
4625 & 4544 Fairview Drive
Wilmington, North Carolina

Full Building Set

CLINE DESIGN ASSOCIATES, P.A. LANDSCAPE ARCHITECTURAL CORPORATION C-143 REGISTERED RALEIGH, NC

REGISTERED LANDSCAPE ARCHITECT No. 395 MICHAEL LATTIMORE
6-20-14

PROJECT: 013060
DATE: 03.19.2014

REVISIONS:	DATE
Comments	04-23-2014
Comments	05.20.2014

DRAWN BY: CT
CHECKED BY: MWL

LANDSCAPE DETAILS & PLANT SCHEDULE

LP2.00