SITE PLANS and PROFILES of

MARKET STREET SITE

FOR

BOJANGLES

CITY OF WILMINGTON, NEW HANOVER CO.
NORTH CAROLINA

DATE: FEBRUARY 2014

LOCATION MAP
(NOT TO SCALE)

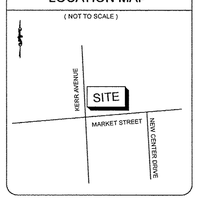

For each open utility cut of City streets, a $325 permit shall be required from the City prior to occupancy and/or project acceptance.

STORMWATER MANAGEMENT PLAN
APPROVED
CITY OF WILMINGTON
ENGINEERING DEPARTMENT
DATE _____
PERMIT # _____
SIGNED_____

Approved Construction Plan

	Name	Date
Planning		
Traffic		
Fire		

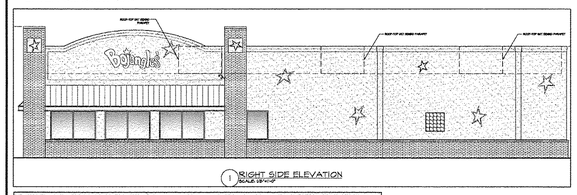

ELEVATION VIEWS

Front View - NTS

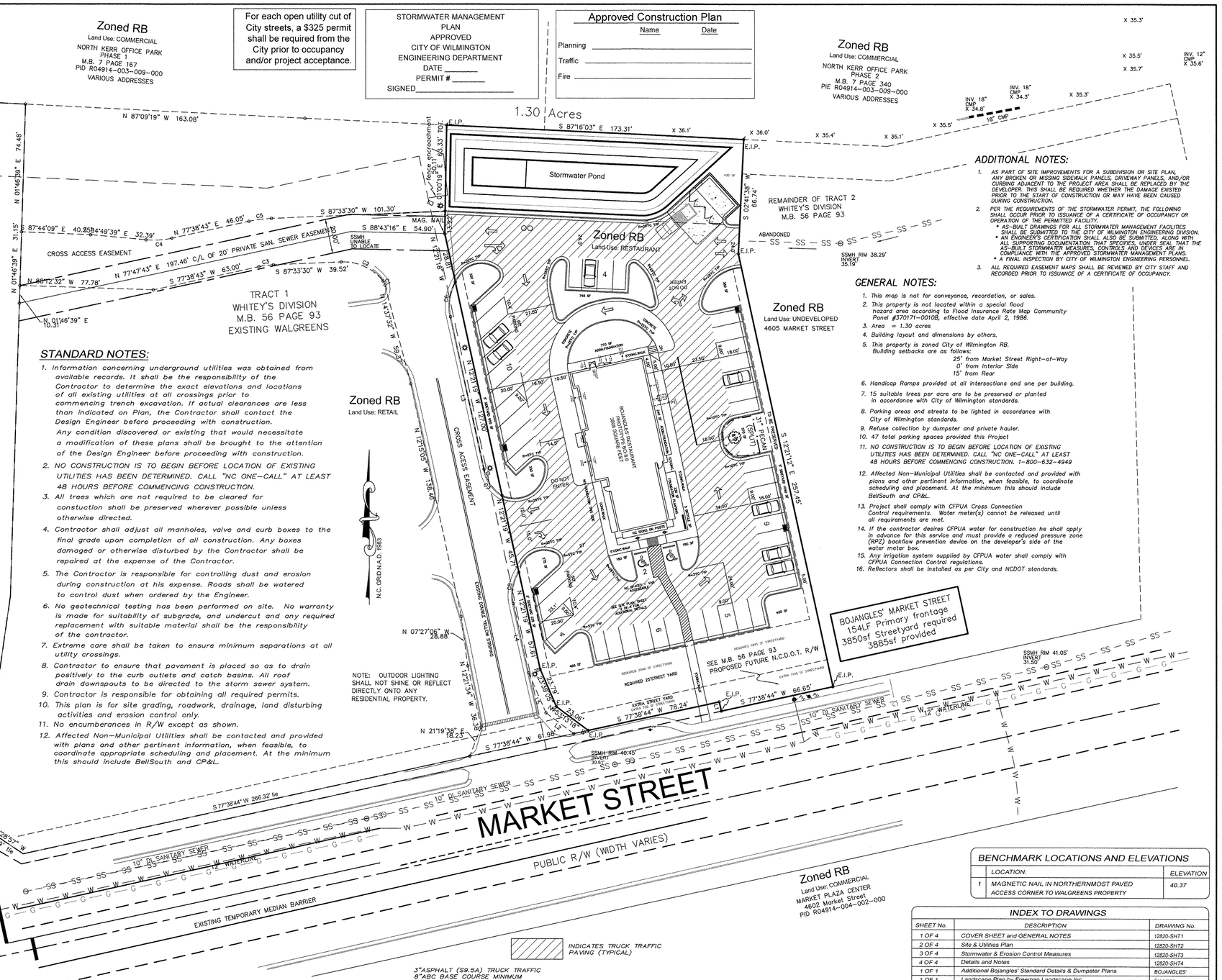

ADDITIONAL NOTES:

1. *AS PART OF SITE IMPROVEMENTS FOR A SUBDIVISION OR SITE PLAN, ANY BROKEN OR MISSING SIDEWALK PANELS, DRIVEWAY PANELS, AND/OR CURBING ADJACENT TO THE PROJECT AREA SHALL BE REPLACED BY THE DEVELOPER. THIS SHALL BE REQUIRED WHETHER THE DAMAGE EXISTED PRIOR TO THE START OF CONSTRUCTION OR MAY HAVE BEEN CAUSED DURING CONSTRUCTION.*
2. *PER THE REQUIREMENTS OF THE STORMWATER PERMIT, THE FOLLOWING SHALL OCCUR PRIOR TO ISSUANCE OF A CERTIFICATE OF OCCUPANCY OR OPERATION OF THE PERMITTED FACILITY.*
   - *AS-BUILT DRAWINGS FOR ALL STORMWATER MANAGEMENT FACILITIES SHALL BE SUBMITTED TO THE CITY OF WILMINGTON ENGINEERING DIVISION.*
   - *AN ENGINEER'S CERTIFICATION SHALL ALSO BE SUBMITTED, ALONG WITH ALL SUPPORTING DOCUMENTATION THAT SPECIFIES, UNDER SEAL THAT THE AS-BUILT STORMWATER MEASURES, CONTROLS AND DEVICES ARE IN COMPLIANCE WITH THE APPROVED STORMWATER MANAGEMENT PLANS.*
   - *A FINAL INSPECTION BY CITY OF WILMINGTON ENGINEERING PERSONNEL.*
3. *ALL REQUIRED EASEMENT MAPS SHALL BE REVIEWED BY CITY STAFF AND RECORDED PRIOR TO ISSUANCE OF A CERTIFICATE OF OCCUPANCY.*

GENERAL NOTES:

1. *This map is not for conveyance, recordation, or sales.*
2. *This property is not located within a special flood hazard area according to Flood Insurance Rate Map Community Panel #370171-0010B, effective date April 2, 1986.*
3. *Area = 1.30 acres*
4. *Building layout and dimensions by others.*
5. *This property is zoned City of Wilmington RB. Building setbacks are as follows:*
   25' from Market Street Right-of-Way
   0' from Interior Side
   15' from Rear
6. *Handicap Ramps provided at all intersections and one per building.*
7. *15 suitable trees per acre are to be preserved or planted in accordance with City of Wilmington standards.*
8. *Parking areas and streets to be lighted in accordance with City of Wilmington standards.*
9. *Refuse collection by dumpster and private hauler.*
10. *47 total parking spaces provided this Project*
11. *NO CONSTRUCTION IS TO BEGIN BEFORE LOCATION OF EXISTING UTILITIES HAS BEEN DETERMINED. CALL "NC ONE-CALL" AT LEAST 48 HOURS BEFORE COMMENCING CONSTRUCTION. 1-800-632-4949*
12. *Affected Non-Municipal Utilities shall be contacted and provided with plans and other pertinent information, when feasible, to coordinate scheduling and placement. At the minimum this should include BellSouth and CP&L.*
13. *Project shall comply with CFPUA Cross Connection Control requirements. Water meter(s) cannot be released until all requirements are met.*
14. *If the contractor desires CFPUA water for construction he shall apply in advance for this service and must provide a reduced pressure zone (RPZ) backflow prevention device on the developer's side of the water meter box.*
15. *Any irrigation system supplied by CFPUA water shall comply with CFPUA Connection Control regulations.*
16. *Reflectors shall be installed as per City and NCDOT standards.*

STANDARD NOTES:

1. *Information concerning underground utilities was obtained from available records. It shall be the responsibility of the Contractor to determine the exact elevations and locations of all existing utilities at all crossings prior to commencing trench excavation. If actual clearances are less than indicated on Plan, the Contractor shall contact the Design Engineer before proceeding with construction. Any condition discovered or existing that would necessitate a modification of these plans shall be brought to the attention of the Design Engineer before proceeding with construction.*
2. *NO CONSTRUCTION IS TO BEGIN BEFORE LOCATION OF EXISTING UTILITIES HAS BEEN DETERMINED. CALL "NC ONE-CALL" AT LEAST 48 HOURS BEFORE COMMENCING CONSTRUCTION.*
3. *All trees which are not required to be cleared for constuction shall be preserved wherever possible unless otherwise directed.*
4. *Contractor shall adjust all manholes, valve and curb boxes to the final grade upon completion of all construction. Any boxes damaged or otherwise disturbed by the Contractor shall be repaired at the expense of the Contractor.*
5. *The Contractor is responsible for controlling dust and erosion during construction at his expense. Roads shall be watered to control dust when ordered by the Engineer.*
6. *No geotechnical testing has been performed on site. No warranty is made for suitability of subgrade, and undercut and any required replacement with suitable material shall be the responsibility of the contractor.*
7. *Extreme care shall be taken to ensure minimum separations at all utility crossings.*
8. *Contractor to ensure that pavement is placed so as to drain positively to the curb outlets and catch basins. All roof drain downspouts to be directed to the storm sewer system.*
9. *Contractor is responsible for obtaining all required permits.*
10. *This plan is for site grading, roadwork, drainage, land disturbing activities and erosion control only.*
11. *No encumberances in R/W except as shown.*
12. *Affected Non-Municipal Utilities shall be contacted and provided with plans and other pertinent information, when feasible, to coordinate appropriate scheduling and placement. At the minimum this should include BellSouth and CP&L.*

CITY STANDARD NOTES:

1. *PRIOR TO ANY CLEARING, GRADING OR CONSTRUCTION ACTIVITY, TREE PROTECTION FENCING WILL BE INSTALLED AROUND PROTECTED TREES OR GROVES OF TREES AND NO CONSTRUCTION WORKERS, TOOLS, MATERIALS, OR VEHICLES ARE PERMITTED WITHIN THE TREE PROTECTION FENCING.*
2. *ANY TREES AND / OR AREAS DESIGNATED TO BE PROTECTED MUST BE PROPERLY BARRICADED WITH FENCING AND PROTECTED THROUGHOUT CONSTRUCTION TO INSURE THAT NO CLEARING, GRADING OR STAGING OF MATERIALS WILL OCCUR IN THOSE AREAS.*
3. *NO EQUIPMENT IS ALLOWED ON SITE UNTIL ALL TREE PROTECTION FENCING AND SILT FENCING IS INSTALLED AND APPROVED. PROTECTIVE FENCING IS TO BE MAINTAINED THROUGHOUT THE DURATION OF THE PROJECT. AND CONTRACTORS SHALL RECEIVE ADEQUATE INSTRUCTION ON TREE PROTECTION METHODS.*
4. *ALL PAVEMENT MARKINGS IN PUBLIC RIGHTS-OF-WAY AND FOR DRIVEWAYS ARE TO BE THERMOPLASTIC AND MEET CITY AND/OR NCDOT STANDARDS.*
5. *ONCE STREETS ARE OPEN TO TRAFFIC, CONTACT TRAFFIC ENGINEERING TO REQUEST INSTALLATION OF TRAFFIC AND STREET NAME SIGNS. PROPOSED STREET NAMES MUST BE APPROVED PRIOR TO INSTALLATION OF STREET NAME SIGNS.*
6. *TRAFFIC CONTROL DEVICES (INCLUDING SIGNS AND PAVEMENT MARKINGS) IN AREAS OPEN TO PUBLIC TRAFFIC ARE TO MEET MUTCD (MANUAL ON UNIFORM TRAFFIC CONTROL DEVICES) STANDARDS.*
7. *CONTACT TRAFFIC ENGINEERING AT 341-7888 TO ENSURE THAT ALL TRAFFIC SIGNAL FACILITIES AND EQUIPMENT ARE SHOWN ON THE PLAN.*
8. *CALL TRAFFIC ENGINEERING AT 341-7888 FORTY-EIGHT HOURS PRIOR TO ANY EXCAVATION IN THE RIGHT-OF-WAY.*
9. *TRAFFIC ENGINEERING MUST APPROVE OF PAVEMENT MARKING PRIOR TO ACTUAL STRIPING.*
10. *ALL PARKING STALL MARKINGS AND LANE ARROWS WITHIN THE PARKING AREAS SHALL BE WHITE.*
11. *ALL TRAFFIC CONTROL SIGNS AND MARKINGS OFF THE RIGHT-OF-WAY ARE TO BE MAINTAINED BY THE OWNER IN ACCORDANCE WITH MUTCD STANDARDS.*
12. *STOP SIGNS AND STREET SIGNS TO REMAIN IN PLACE DURING CONSTRUCTION.*
13. *TACTILE WARNING MATS WILL BE INSTALLED ON ALL WHEELCHAIR RAMPS.*
14. *A UTILITY CUT PERMIT IS REQUIRED FOR EACH OPEN CUT OF A CITY STREET. IN CERTAIN CASES ENTIRE RESURFACING OF THE OPEN CUT AREA MAY BE REQUIRED.*
15. *ANY BROKEN OR MISSING SIDEWALK OR DRIVEWAY PANELS OR CURBING WILL BE REPLACED.*
16. *CONTACT THE CITY AT 341-7888 TO DISCUSS STREET LIGHTING OPTIONS.*
17. *WATER AND SEWER SERVICE SHALL MEET CAPE FEAR PUBLIC UTILITY AUTHORITY (CFPUA) DETAILS AND SPECIFICATIONS.*
18. *PROJECT SHALL COMPLY WITH CAPE FEAR PUBLIC UTILITY AUTHORITY CROSS CONNECTION CONTROL REQUIREMENTS. WATER METERS CANNOT BE RELEASED UNTIL ALL REQUIREMENTS ARE MET AND THE STATE HAS GIVEN THEIR FINAL APPROVAL. CALL 343-3910 FOR INFORMATION.*
19. *IF THE CONTRACTOR DESIRES CFPUA WATER FOR CONSTRUCTION HE SHALL APPLY IN ADVANCE FOR THIS SERVICE AND MUST PROVIDE A REDUCED PRESSURE ZONE (RPZ) BACKFLOW PREVENTION DEVICE ON THE DEVELOPER'S SIDE OF THE WATER METER BOX.*
20. *ANY IRRIGATION SYSTEM SUPPLIED BY CFPUA WATER SHALL COMPLY WITH CFPUA CROSS CONNECTION CONTROL REGULATIONS. CALL 343-3910 FOR INFORMATION.*
21. *ANY IRRIGATION SYSTEM SHALL BE EQUIPPED WITH A RAIN AND FREEZER SENSOR.*
22. *ANY BACKFLOW PREVENTION DEVICES REQUIRED BY CFPUA WILL NEED TO BE ON THE LIST OF APPROVED DEVICES BY USCFCCCHR OR ASSE.*
23. *CONTRACTOR TO FIELD VERIFY EXISTING WATER AND SEWER SERVICE LOCATIONS, SIZES AND MATERIALS PRIOR TO CONSTRUCTION. ENGINEER TO BE NOTIFIED OF ANY CONFLICTS.*
24. *CONTRACTOR SHALL MAINTAIN ALL-WEATHER ACCESS FOR EMERGENCY VEHICLES AT ALL TIMES DURING CONSTRUCTION.*
25. *UNDERGROUND FIRE LINES MUST BE PERMITTED AND INSPECTED BY THE WILMINGTON FIRE DEPARTMENT FROM THE PUBLIC RIGHT-OF-WAY TO THE BUILDING. CONTACT THE WILMINGTON FIRE DEPARTMENT DIVISION OF FIRE AND LIFE SAFETY AT 910-341-0696.*
26. *NO OBSTRUCTIONS ARE PERMITTED IN THE SPACE BETWEEN THIRTY (30) INCHES AND TEN (10) FEET ABOVE THE GROUND WITHIN THE TRIANGULAR SIGHT DISTANCE.*
27. *CONTACT THE NORTH CAROLINA ONE CALL CENTER AT 1-800-632-4949 PRIOR TO ANY DIGGING, CLEARING OR GRADING.*
28. *ANY PVC MAINS ARE TO BE MARKED WITH NO.10 INSULATED COPPER WIRE INSTALLED THE ENTIRE LENGTH AND STAPPED TO THE PIPE WITH DUCT TAPE, AND STRIPPED TO BARE WIRE AND SECURED TO ALL VALVES AND FITTINGS, ACCESSIBLE IN ALL VALVE AND METER BOXES. ALL WATER MAINS ARE TO HAVE A MINIMUM OF 3' COVER.*

ADDITIONAL FIRE DEPARTMENT NOTES:
- HYDRANTS MUST BE WITHIN 150' OF THE FDC
- THE FDC MUST BE WITHIN 40' OF FIRE APPARATUS PLACEMENT
- LANDSCAPING MAY NOT BLOCK ANY FDC OR HYDRANT WITH A 3' CLEAR SPACE MAINTAINED
- CONTRACTOR TO MAINTAIN ALL WEATHER ACCESS FOR EMERGENCY VEHICLES DURING CONSTRUCTION
- HYDRANTS MUST BE LOCATED WITHIN 8' OF THE CURB
- NEW HYDRANTS MUST BE AVAILABLE FOR USE PRIOR TO BUILDING CONSTRUCTION

PROPOSED SEWER & WATER USAGE = (DRIVE-IN RESTAURANT @50 GPD per SPACE) = 2250 GPD

BENCHMARK LOCATIONS AND ELEVATIONS

	LOCATION:	ELEVATION
1	MAGNETIC NAIL IN NORTHERNMOST PAVED ACCESS CORNER TO WALGREENS PROPERTY	40.37

INDEX TO DRAWINGS

SHEET No.	DESCRIPTION	DRAWING No.
1 OF 4	COVER SHEET and GENERAL NOTES	12820-SHT1
2 OF 4	Site & Utilities Plan	12820-SHT2
3 OF 4	Stormwater & Erosion Control Measures	12820-SHT3
4 OF 4	Details and Notes	12820-SHT4
1 OF 1	Additional Bojangles' Standard Details & Dumpster Plans	BOJANGLES'
1 OF 1	Landscape Plan by Freeman Landscape Inc.	Freeman
VARIOUS	SEWER & WATER CONSTRUCTION STANDARD DETAILS	CFPUA

LEGEND

W/V = WATER VALVE
W/M = WATER METER
C/O = SANITARY SEWER CLEAN OUT
INV. = INVERT
BFP = BACK FLOW PREVENTOR
G/W = GUY WIRE
SW/MH = STORM MANHOLE
GT. = GREASE TRAP
F/H = FIRE HYDRANT
I.S. = IRON SET
= SANITARY SEWER MANHOLE
= CURB INLET
= TREE
= STREET LIGHT
= WATER SERVICE
= SEWER CLEANOUT
= WATER VALVE

PROPERTY LINE
BUILDING SETBACK
CENTERLINE
EASEMENT
COMPUTED PROPERTY LINE

SURVEY NOTES:

1. AREA COMPUTED BY COORDINATE METHOD
2. ALL DISTANCES ARE HORIZONTAL GROUND
3. THIS SURVEY IS NOT FOR RECORDATION, IT DOES NOT MEET ALL REQUIREMENTS OF G.S. 47-30
4. PROPERTY SUBJECT TO ALL EASEMENTS OF RECORD
5. THE UNDERGROUND UTILITIES SHOWN ON THIS SURVEY ARE LOCATED FROM FIELD SURVEY INFORMATION, AND EXISTING ASBUILT DRAWINGS. THE SURVEYOR MAKES NO GUARANTEE THAT THE UNDERGROUND UTILITIES SHOWN COMPRISE ALL SUCH UTILITIES IN THE AREA. THE SURVEYOR FURTHER DOES NOT WARRANT THAT THE UNDERGROUND UTILITIES SHOWN ARE IN THE EXACT LOCATION INDICATED ALTHOUGH THE SURVEYOR DOES CERTIFY THAT THE UTILITIES ARE LOCATED AS ACCURATELY AS POSSIBLE FORM INFORMATION AVAILABLE. THE SURVEYOR HAS NOT PHYSICALLY LOCATED THE UNDERGROUND UTILITIES.
7. FOR REFERENCE SEE AS NOTED
8. THIS TRACT IS NOT LOCATED IN A SPECIAL FLOOD HAZARD AREA

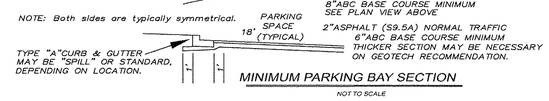

MINIMUM PARKING BAY SECTION
NOT TO SCALE

ADDRESS: 4505 Market Street
DEVELOPER: Bojangles Restaurants, Inc.
9432 Southern Pines Blvd.
Charlotte, NC 27273
704-940-8669
PARCEL ID: RO4914-003-008-000
OWNER: Market & Kerr, LLC
3013-A Hall Watters Drive
Wilmington, NC 28405
910-399-6839

OTHER NOTES:

1. THIS PLAT IS PRELIMINARY, NOT INTENDED FOR RECORDATION, SALES, OR CONVEYANCE.
2. SURVEYED IN 2013, and 2014.
3. ALL DISTANCES AS SHOWN ARE HORIZONTAL.
4. SEWER PROVIDED BY CFPUA
5. WATER PROVIDED BY CFPUA ANTICIPATED USE = 50 GPD PER CAR SPACE 50 X 47 = 2350 GPD TOTAL
6. SITE WILL MEET ALL ZONING REQUIREMENTS.
7. AREA COMPUTED BY COORDINATE METHOD.
8. REGULATED TREES ON SITE TO BE PRESERVED AS SHOWN.
9. STRIPING AND LANES TO CITY STANDARDS (THERMOPLASTIC).
10. NO VEHICULAR ACCESS TO SITE EXCEPT AS SHOWN.
11. ALL UTILITIES UNDERGROUND.
12. COMBINED GRID FACTOR = 1.00000.
13. FOR REFERENCE SEE : DB 5670 PG 1120
14. ONE SIGNIFICANT TREE ON SITE TO BE PRESERVED.
15. REGULATED TREES TO BE REMOVED ARE FOR ESSENTIAL SITE IMPROVEMENTS. NO REGULATED TREES ARE LOCATED IN EXCESS PARKING AREAS.
16. LANDSCAPING PLAN BY OTHERS.
17. CONTRACTOR TO COORDINATE STAGING OF CONSTRUCTION ACTIVITIES WITH THE OWNER AND ACHITECT TO FACILITATE ONGOING ADJOINING BUSINESS ACTIVITIES.
18. CONTRACTOR TO COORDINATE REMOVAL AND RELOCATION OF LIGHTING AND OTHER NON-MUNICIPAL UTILITIES SUCH AS ELECTRICAL AND TELEPHONE CONNECTIONS WITH THE AFFECTED AGENCES AND THE OWNER AND ARCHITECT.
19. CONTRACTOR TO COORDINATE CONSTRUCTION OF PARKING LOT, ISLANDS, AND EXTERIOR FENCING AND SCREENING WITH THE OWNER AND ARCHITECT.
NCDOT PERMIT REQUIRED FOR ANY WORK IN OLEANDER R/W.
20. ALL SERVICES TO BE INSTALLED IN ACCORDANCE WITH CITY and CFPUA TECHNICAL STANDARDS.

REV. NO.	REVISIONS	DATE
1	REVISED AS PER REVIEW COMMENTS	5-08-14

Copyright©, Hanover Design Services, P.A., All rights reserved. Reproduction or use of the contents of this document, or additions or deletions to this document, in whole or part, without written consent of the Land Surveyor or Engineer, is prohibited. Only copies from the original of this document, marked with the original signature and original seal of the Surveyor or Engineer, shall be considered to be valid and true copies.

NORTH CAROLINA PROFESSIONAL SEAL 20007 ENGINEER DAVID S. HOLLIS
5.08.14
dhollis@hdsllm.com

DEVELOPER: BOJANGLES' RESTAURANTS INC.
9432 SOUTHERN PINE BLVD.
CHARLOTTE, NC 28273 phone:704-940-8669

HANOVER DESIGN SERVICES, P.A.
LAND SURVEYORS, ENGINEERS & LAND PLANNERS
1123 FLORAL PARKWAY
WILMINGTON, N.C. 28403
PHONE: (910) 343-8002
LICENSE # C-0597

Site Plan Cover Sheet and General Notes

BOJANGLES' Market Street
LOCATED IN CITY OF WILMINGTON — SMITHVILLE TOWNSHIP, NEW HANOVER COUNTY, NORTH CAROLINA

Date: 3-12-14
Scale: 1"= 30'
Drawn: DSH
Checked: DSH
Project No: 12820
Sheet No: 1 Of: 4

F:\Project Folders\12820-Bojangles\12820-SHT1

30 15 0 30
SCALE IN FEET: 1"= 30'

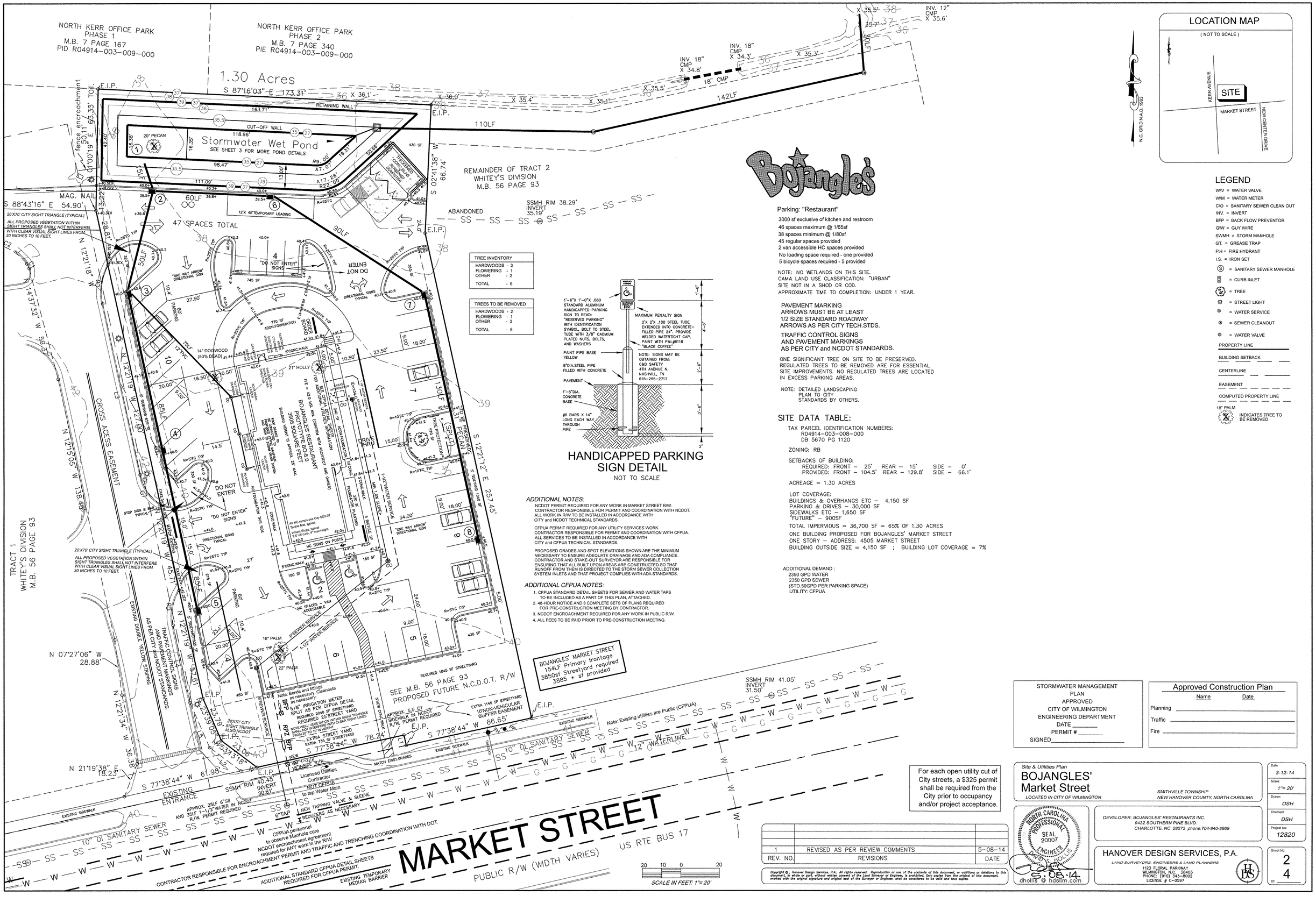

LOCATION MAP

(NOT TO SCALE)

KERR AVENUE · SITE · MARKET STREET · NEW CENTER DRIVE

N.C. GRID N.A.D. 1983

LEGEND

- W/V = WATER VALVE
- W/M = WATER METER
- C/O = SANITARY SEWER CLEAN OUT
- INV. = INVERT
- BFP = BACK FLOW PREVENTOR
- G/W = GUY WIRE
- SWMH = STORM MANHOLE
- GT. = GREASE TRAP
- F/H = FIRE HYDRANT
- I.S. = IRON SET
- Ⓢ = SANITARY SEWER MANHOLE
- = CURB INLET
- = TREE
- = STREET LIGHT
- = WATER SERVICE
- = SEWER CLEANOUT
- = WATER VALVE
- PROPERTY LINE
- BUILDING SETBACK
- CENTERLINE
- EASEMENT
- COMPUTED PROPERTY LINE
- 18" PALM — INDICATES TREE TO BE REMOVED

TREE INVENTORY	
HARDWOODS	- 3
FLOWERING	- 1
OTHER	- 2
TOTAL	- 6

TREES TO BE REMOVED	
HARDWOODS	- 2
FLOWERING	- 1
OTHER	- 2
TOTAL	- 5

HANDICAPPED PARKING SIGN DETAIL

NOT TO SCALE

1'-6"X 1'-0"X .080 STANDARD ALUMINUM HANDICAPPED PARKING SIGN TO READ: "RESERVED PARKING" WITH IDENTIFICATION SYMBOL, BOLT TO STEEL TUBE WITH 3/8" CADMIUM PLATED NUTS, BOLTS, AND WASHERS

MAXIMUM PENALTY SIGN 2"X 2"X .188 STEEL TUBE EXTENDED INTO CONCRETE-FILLED PIPE 24", PROVIDE WELDED WATERTIGHT CAP, PAINT WITH P&L#6118 "BLACK COFFEE"

PAINT PIPE BASE YELLOW

8"DIA.STEEL PIPE FILLED WITH CONCRETE

NOTE: SIGNS MAY BE OBTAINED FROM: C&D SAFETY 47H AVENUE N. NASHWILL, TN 615-255-2717

PAVEMENT

1'-6"DIA. CONCRETE BASE

#6 BARS X 14" LONG EACH WAY THROUGH PIPE

ADDITIONAL NOTES:

NCDOT PERMIT REQUIRED FOR ANY WORK IN MARKET STREET R/W. CONTRACTOR RESPONSIBLE FOR PERMIT AND COORDINATION WITH NCDOT. ALL WORK IN R/W TO BE INSTALLED IN ACCORDANCE WITH CITY and NCDOT TECHNICAL STANDARDS.

CFPUA PERMIT REQUIRED FOR ANY UTILITY SERVICES WORK. CONTRACTOR RESPONSIBLE FOR PERMIT AND COORDINATION WITH CFPUA. ALL SERVICES TO BE INSTALLED IN ACCORDANCE WITH CITY and CFPUA TECHNICAL STANDARDS.

PROPOSED GRADES AND SPOT ELEVATIONS SHOWN ARE THE MINIMUM NECESSARY TO ENSURE ADEQUATE DRAINAGE AND ADA COMPLIANCE. CONTRACTOR AND STAKE-OUT SURVEYOR ARE RESPONSIBLE FOR ENSURING THAT ALL BUILT UPON AREAS ARE CONSTRUCTED SO THAT RUNOFF FROM THEM IS DIRECTED TO THE STORM SEWER COLLECTION SYSTEM INLETS AND THAT PROJECT COMPLIES WITH ADA STANDARDS.

ADDITIONAL CFPUA NOTES:

1. CFPUA STANDARD DETAIL SHEETS FOR SEWER AND WATER TAPS TO BE INCLUDED AS A PART OF THIS PLAN, ATTACHED.
2. 48-HOUR NOTICE AND 3 COMPLETE SETS OF PLANS REQUIRED FOR PRE-CONSTRUCTION MEETING BY CONTRACTOR.
3. NCDOT ENCROACHMENT REQUIRED FOR ANY WORK IN PUBLIC R/W.
4. ALL FEES TO BE PAID PRIOR TO PRE-CONSTRUCTION MEETING.

Bojangles'

Parking: "Restaurant"

3000 sf exclusive of kitchen and restroom
46 spaces maximum @ 1/65sf
38 spaces minimum @ 1/80sf
45 regular spaces provided
2 van accessible HC spaces provided
No loading space required - one provided
5 bicycle spaces required - 5 provided

NOTE: NO WETLANDS ON THIS SITE.
CAMA LAND USE CLASSIFICATION: "URBAN"
SITE NOT IN A SHOD OR COD.
APPROXIMATE TIME TO COMPLETION: UNDER 1 YEAR.

PAVEMENT MARKING
ARROWS MUST BE AT LEAST
1/2 SIZE STANDARD ROADWAY
ARROWS AS PER CITY TECH.STDS.

TRAFFIC CONTROL SIGNS
AND PAVEMENT MARKINGS
AS PER CITY and NCDOT STANDARDS.

ONE SIGNIFICANT TREE ON SITE TO BE PRESERVED. REGULATED TREES TO BE REMOVED ARE FOR ESSENTIAL SITE IMPROVEMENTS. NO REGULATED TREES ARE LOCATED IN EXCESS PARKING AREAS.

NOTE: DETAILED LANDSCAPING PLAN TO CITY STANDARDS BY OTHERS.

SITE DATA TABLE:

TAX PARCEL IDENTIFICATION NUMBERS:
R04914-003-008-000
DB 5670 PG 1120

ZONING: RB

SETBACKS OF BUILDING:
REQUIRED: FRONT - 25' REAR - 15' SIDE - 0'
PROVIDED: FRONT - 104.5' REAR - 129.8' SIDE - 66.1'

ACREAGE = 1.30 ACRES

LOT COVERAGE:
BUILDINGS & OVERHANGS ETC - 4,150 SF
PARKING & DRIVES - 30,000 SF
SIDEWALKS ETC - 1,650 SF
"FUTURE" - 900SF

TOTAL IMPERVIOUS = 36,700 SF = 65% OF 1.30 ACRES

ONE BUILDING PROPOSED FOR BOJANGLES' MARKET STREET
ONE STORY - ADDRESS: 4505 MARKET STREET
BUILDING OUTSIDE SIZE = 4,150 SF ; BUILDING LOT COVERAGE = 7%

ADDITIONAL DEMAND :
2350 GPD WATER
2350 GPD SEWER
(STD.50GPD PER PARKING SPACE)
UTILITY: CFPUA

STORMWATER MANAGEMENT
PLAN
APPROVED
CITY OF WILMINGTON
ENGINEERING DEPARTMENT
DATE _____
PERMIT # _____
SIGNED_____

Approved Construction Plan

	Name	Date
Planning		
Traffic		
Fire		

For each open utility cut of City streets, a $325 permit shall be required from the City prior to occupancy and/or project acceptance.

Site & Utilities Plan

BOJANGLES' Market Street

LOCATED IN CITY OF WILMINGTON

SMITHVILLE TOWNSHIP
NEW HANOVER COUNTY, NORTH CAROLINA

REV. NO.	REVISIONS	DATE
1	REVISED AS PER REVIEW COMMENTS	5-08-14

Copyright ©, Hanover Design Services, P.A., All rights reserved. Reproduction or use of the contents of this document, or additions or deletions to this document, in whole or part, without written consent of the Land Surveyor or Engineer, is prohibited. Only copies from the original of this document, marked with the original signature and original seal of the Surveyor or Engineer, shall be considered to be valid and true copies.

NORTH CAROLINA PROFESSIONAL SEAL 20007 ENGINEER DAVID S. HOLLIS
5-08-14
dhollis @ hdsfirm.com

DEVELOPER: BOJANGLES' RESTAURANTS INC.
9432 SOUTHERN PINE BLVD.
CHARLOTTE, NC 28273 phone:704-940-8659

HANOVER DESIGN SERVICES, P.A.
LAND SURVEYORS, ENGINEERS & LAND PLANNERS
1123 FLORAL PARKWAY
WILMINGTON, N.C. 28403
PHONE: (910) 343-8002
LICENSE # C-0597

Date:	3-12-14
Scale:	1"= 20'
Drawn:	DSH
Checked:	DSH
Project No:	12820
Sheet No:	2
Of:	4

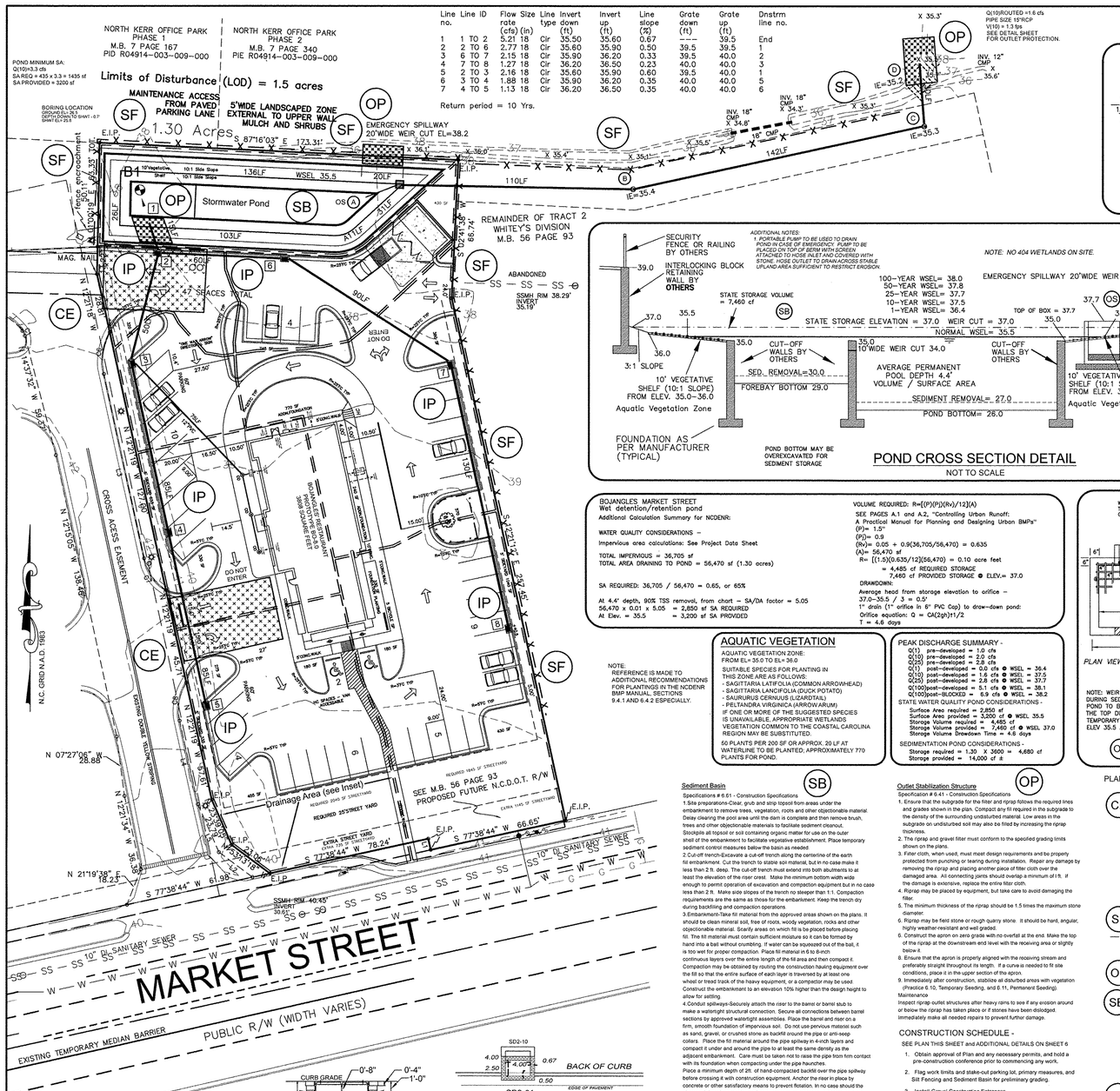

Line no.	Line ID	Flow rate (cfs)	Size (in)	Line type	Invert down (ft)	Invert up (ft)	Line slope (%)	Grate down (ft)	Grate up (ft)	Dnstrm line no.
1	1 TO 2	5.21	18	Clr	35.50	35.60	0.67	—	39.5	End
2	2 TO 6	2.77	18	Clr	35.60	35.90	0.50	39.5	39.5	1
3	6 TO 7	2.15	18	Clr	35.90	36.20	0.33	39.5	40.0	2
4	7 TO 8	1.27	18	Clr	36.20	36.50	0.23	40.0	40.0	3
5	2 TO 3	2.16	18	Clr	35.60	35.90	0.60	39.5	40.0	1
6	3 TO 4	1.88	18	Clr	35.90	36.20	0.35	40.0	40.0	5
7	4 TO 5	1.13	18	Clr	36.20	36.50	0.35	40.0	40.0	6

Return period = 10 Yrs.

Q(10)ROUTED =1.6 cfs
PIPE SIZE 15"RCP
V(10) = 1.3 fps
SEE DETAIL SHEET FOR OUTLET PROTECTION.

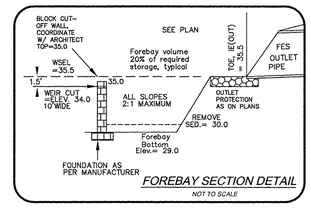

FOREBAY SECTION DETAIL
NOT TO SCALE

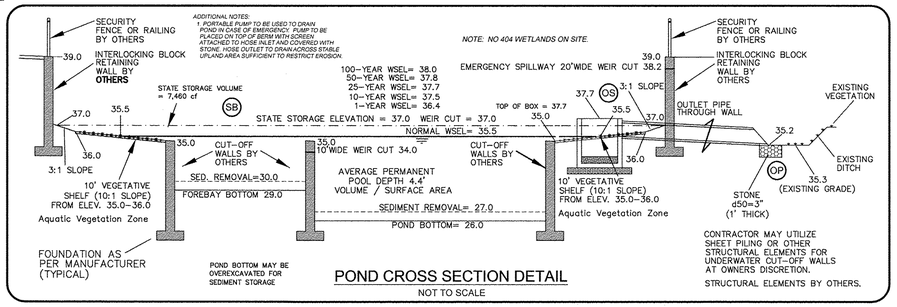

POND CROSS SECTION DETAIL
NOT TO SCALE

BOJANGLES MARKET STREET
Wet detention/retention pond
Additional Calculation Summary for NCDENR:

WATER QUALITY CONSIDERATIONS –

Impervious area calculations: See Project Data Sheet

TOTAL IMPERVIOUS = 36,705 sf
TOTAL AREA DRAINING TO POND = 56,470 sf (1.30 acres)

SA REQUIRED: 36,705 / 56,470 = 0.65, or 65%

At 4.4' depth, 90% TSS removal, from chart – SA/DA factor = 5.05
56,470 x 0.01 x 5.05 = 2,850 sf SA REQUIRED
At Elev. = 35.5 = 3,200 sf SA PROVIDED

VOLUME REQUIRED: R=[(P)(P)](Rv)/12](A)
SEE PAGES A.1 and A.2, "Controlling Urbon Runoff: A Practical Manual for Planning and Designing Urban BMPs"
(P)= 1.5"
(P)= 0.9
(Rv)= 0.05 + 0.9(36,705/56,470) = 0.635
(A)= 56,470 sf
R= [(1.5)(0.635/12](56,470) = 0.10 acre feet
= 4,485 cf REQUIRED STORAGE
7,460 cf PROVIDED STORAGE @ ELEV.= 37.0

DRAWDOWN:
Average head from storage elevation to orifice – 37.0–35.5 / 3 = 0.5'
1" drain (1" orifice in 6" PVC Cap) to draw-down pond:
Orifice equation: Q = CA(2gh)1/2
T = 4.6 days

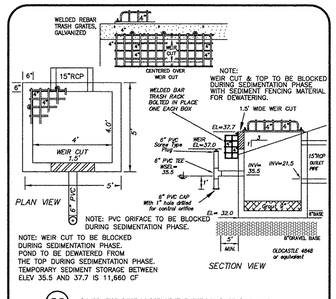

(OS) OUTLET STRUCTURE DETAILS (POND 1)
NOT TO SCALE

NOTE:
REFERENCE IS MADE TO ADDITIONAL RECOMMENDATIONS FOR PLANTINGS IN THE NCDENR BMP MANUAL, SECTIONS 9.4.1 AND 6.4.2 ESPECIALLY.

AQUATIC VEGETATION

AQUATIC VEGETATION ZONE:
FROM EL= 35.0 TO EL= 36.0

SUITABLE SPECIES FOR PLANTING IN THIS ZONE ARE AS FOLLOWS:
- SAGITTARIA LATIFOLIA (COMMON ARROWHEAD)
- SAGITTARIA LANCIFOLIA (DUCK POTATO)
- SAURURUS CERNUUS (LIZARD'TAIL)
- PELTANDRA VIRGINICA (ARROW'ARUM)

IF ONE OR MORE OF THE SUGGESTED SPECIES IS UNAVAILABLE, APPROPRIATE WETLANDS VEGETATION COMMON TO THE COASTAL CAROLINA REGION MAY BE SUBSTITUTED.

50 PLANTS PER 200 SF OR APPROX. 20 LF AT WATERLINE TO BE PLANTED; APPROXIMATELY 770 PLANTS FOR POND.

PEAK DISCHARGE SUMMARY -
Q(1) pre-developed = 1.0 cfs
Q(10) pre-developed = 2.0 cfs
Q(25) pre-developed = 2.8 cfs
Q(1) post-developed = 0.0 cfs @ WSEL = 36.4
Q(10) post-developed = 1.6 cfs @ WSEL = 37.5
Q(25) post-developed = 2.8 cfs @ WSEL = 37.7
Q(100)post-developed = 5.1 cfs @ WSEL = 38.1
Q(100)post-BLOCKED = 6.9 cfs @ WSEL = 38.2

STATE WATER QUALITY POND CONSIDERATIONS -
Surface Area required = 2,850 sf
Surface Area provided = 3,200 sf @ WSEL 35.5
Storage Volume required = 4,485 cf
Storage Volume provided = 7,460 cf @ WSEL 37.0
Storage Volume Drawdown Time = 4.6 days

SEDIMENTATION POND CONSIDERATIONS -
Storage required = 1.30 X 3600 = 4,680 cf
Storage provided = 14,000 cf @

(SB) Sediment Basin
Specifications # 6.61 - Construction Specifications
1.Site preparation-Clear, grub and strip topsoil from areas under the embankment to remove trees, vegetation, roots and other objectionable material. Delay clearing the pool area until the dam is complete and then remove brush, trees and other objectionable materials to facilitate sediment removal. Stockpile all topsoil or soil containing organic matter for use on the outer shell of the embankment to facilitate vegetative establishment. Place temporary sediment control measures below the basin as needed.
2.Cut-off trench-Excavate a cut-off trench along the centerline of the earth fill embankment. Cut the trench to stable soil material, but in no case make it less than 2 ft. deep. The cut-off trench must extend into both abutments to at least the elevation of the riser crest. Make the minimum bottom width wide enough to permit operation of excavation and compaction equipment but in no case less than 2 ft. Make side slopes of the trench no steeper than 1:1. Compaction requirements are the same as those for the embankment. Keep the trench dry during backfilling and compaction operations.
3.Embankment-Take fill material from the approved areas shown on the plans. It should be clean mineral soil, free of roots, woody vegetation, rocks and other objectionable material. Scarify areas on which fill is be placed before placing fill. The fill material must contain sufficient moisture so it can be formed by hand into a ball without crumbling. If water can be squeezed out of the ball, it is too wet for proper compaction. Place fill material in 6 to 8-inch continuous layers over the entire length of the fill area and then compact it. Compaction may be obtained by routing the construction hauling equipment over the fill so that the entire surface of each layer is traversed by at least one wheel or tread track of the heavy equipment, or a compactor may be used. Construct the embankment to an elevation 10% higher than the design height to allow for settling.
4.Conduit spillways-Securely attach the riser to the barrel or barrel stub to make a watertight structural connection. Secure all connections between barrel sections by approved watertight assemblies. Place the barrel and riser on a firm, smooth foundation of impervious soil. Do not use pervious material such as sand, gravel, or crushed stone as backfill around the pipe or anti-seep collars. Place the fill material around the pipe spillway in 4-inch layers and compact it under and around the pipe to at least the same density as the adjacent embankment. Care must be taken not to raise the pipe from firm contact with its foundation when compacting under the pipe haunches. Place a minimum depth of 2ft. of hand-compacted backfill over the pipe spillway before crossing it with construction equipment. Anchor the riser in place by concrete or other satisfactory means to prevent flotation. In no case should the pipe conduit be installed by cutting a trench through the dam after the embankment is complete.
5.Emergency spillway-Install the emergency spillway in undisturbed soil. The achievement of planned elevations, grade, design width, and entrance and exit channel slopes are critical to the successful operation of emergency spillway.
6.Inlet-Discharge water into the basin in a manner to prevent erosion. Use diversions with outlet protection to divert sediment-laden water to the upper end of the pool area to improve basin trap efficiency (References: Runoff Control Measures and Outlet Protection).
7.Erosion control-Construct the structure so that the disturbed area is minimized. Divert surface water away from bare areas. Complete the embankment before the area is cleared. Stabilize the emergency spillway embankment and all other disturbed areas above the crest of the principal spillway immediately after construction (References: Surface Stabilization).
8.Safety-Sediment basins may attract children and can be dangerous. Avoid steep side slopes, and fence and mark basins with warning signs if trespassing is likely. Follow all state and local requirements.

Maintenance
Check sediment basins after periods of significant runoff. Remove sediment and restore the basin to its original dimensions when sediment accumulates to one-half the design depth.
Check the embankment, spillways, and outlet for erosion damage, and inspect the embankment for piping and settlement. Make all necessary repairs immediately. Remove all trash and other debris from the riser and pool area.

(OP) Outlet Stabilization Structure
Specification # 6.41 - Construction Specifications
1. Ensure that the subgrade for the filter and riprap follows the required lines and grades shown in the plan. Compact any fill required in the subgrade to the density of the surrounding undisturbed material. Low areas in the subgrade on undisturbed soil may also be filled by increasing the riprap thickness.
2. The riprap and gravel filter must conform to the specified grading limits shown on the plans.
3. Filter cloth, when used, must meet design requirements and be properly protected from punching or tearing during installation. Repair any damage by removing the riprap and placing another piece of filter cloth over the damaged area. All connecting joints should overlap a minimum of 1 ft. If the damage is extensive, replace the entire filter cloth.
4. Riprap may be placed by equipment, but take care to avoid damaging the filter.
5. The minimum thickness of the riprap should be 1.5 times the maximum stone diameter.
6. Riprap may be field stone or rough quarry stone. It should be hard, angular, highly weather-resistant and well graded.
7. Construct the apron on zero grade with no overfall at the end. Make the top of the riprap at the downstream end level with the receiving area or slightly below it.
8. Ensure that the apron is properly aligned with the receiving stream and preferably straight throughout its length. If a curve is needed to fit site conditions, place it in the upper section of the apron.
9. Immediately after construction, stabilize all disturbed areas with vegetation (Practice 6.10, Temporary Seeding, and 6.11, Permanent Seeding).

Maintenance
Inspect riprap outlet structures after heavy rains to see if any erosion around or below the riprap has taken place or if stones have been dislodged. Immediately make all needed repairs to prevent further damage.

CONSTRUCTION SCHEDULE -

SEE PLAN THIS SHEET and ADDITIONAL DETAILS ON SHEET 6

1. Obtain approval of Plan and any necessary permits, and hold a pre-construction conference prior to commencing any work.
2. Flag work limits and stake-out parking lot, primary measures, and Silt Fencing and Sediment Basin for preliminary grading.
3. Install Gravel Construction Entrances.
4. Install Silt Fencing as shown on Plan prior to clearing and grubbing site. Sediment Basin to be constructed prior to building.
5. Install utilities in roadway and drives, establish final grades and stabilize parking areas and roadways with stone base course.
6. Final grade building site, install non-municipal utilities as needed, and vegetatively stabilize areas where building construction is not imminent.
7. All erosion and sediment control Practices are to be inspected weekly and after any rainfall, and repaired as necessary.
8. Upon completion of building construction, the roadway and parking areas are to be paved and all areas permanently vegetatively stabilized. After site stabilization, temporary measures are to be removed and the Sediment Basin cleaned to its original design contours, if necessary, and riser structures orifices opened, so as to function as a stormwater management / water quality retention pond.

MAINTENANCE PLAN -

1. All measures to be inspected weekly and after any rainfall event and needed repairs made immediately.
2. Sediment Basin to be cleaned out when the level of sediment reaches as shown on individual pond plans.
3. Construction entrance to be maintained in a condition to prevent mud or sediment from leaving the construction site. Periodic top/dressing with 2"stone may be required. Remove all objectionable material spilled, washed, or tracked onto public roadways immediately.
4. Sediment to be removed from behind the any Silt Fence and inlet protection devices when it becomes 0.5' deep. Fencing and inlet protection to be repaired as needed to maintain a barrier.
5. All seeded areas shall be fertilized, mulched, and re-seeded as necessary, according to specifications provided, to maintain a suitable vegetative cover.
6. Inspect rip-rap outlet structures weekly and after significant (1/2 inch or greater) rainfall events to see if any erosion around or below rip-rap has taken place, or if stones have been dislodged. Immediately make all needed repairs to prevent further damage.

VEGETATIVE PLAN -

1. Permanent vegetation to be established in accordance with "North Carolina Erosion and Sediment Control Planning and Design Manual", Section 6.11, latest version. See next Sheet.

PLANNED EROSION AND SEDIMENT CONTROL PRACTICES -

(CE) 1. TEMPORARY GRAVEL CONSTRUCTION ENTRANCE
Practice 6.06
Shall be installed at the entrances of the proposed project in and from Walgreens drives as shown. Drainage is away from the road and sedimentation will be controlled with downstream practices. During wet weather it may be necessary to wash truck tires at these locations.

2. LAND GRADING
Practice 6.02
Grading should be limited to areas as shown on the Plans. Cut and fill slopes shall be 3:1 or flatter except where specifically indicated. Care shall be taken during land grading activities not to damage existing trees that are not required to be removed.

(SF) 3. SEDIMENT FENCE
Practice 6.62
Sediment fencing should be installed as shown on the Plan, first, to delineate and protect low areas, and around any temporary stockpile areas as necessary to prevent any graded interior areas from eroding onto adjacent lands or roadway, or into inlets.

(OP) 4. OUTLET STABILIZATION
Practice 6.41
Riprap aprons will be located at the downstream end of all discharge pipes to prevent scour.

(SB) 7. SEDIMENT BASIN
Practice 6.61
The Sediment Basin is to be constructed (see Construction Schedule) as the primary Practice to prevent sediment from leaving the site. Detailed design and spillway configurations are specified in the details as shown on this Plan and the Narrative. The PVC outlet is to be blocked and weir blocked during the sedimentation function until entire watershed is permanently stabilized and pond is converted to permanent stormwater management detention / retention function. The Contractor will then open the control orifices.

(IP) 8. INLET PROTECTION
Practice 6.51
Storm sewer inlet barriers of hardware cloth and gravel inlet protection are to be constructed to help prevent sediment from entering the storm sewer system. After permanent stabilization of the entire contributing watershed area, the storm sewer system is to be flushed to remove accumulated sediment and ensure design flows.

STABILIZATION TIME FRAMES:

SITE AREA DESCRIPTION	STABILIZATION
Perimeter dikes, swales, ditches and slopes	7 DAYS
High Quality Water (HQW) Zones	7 DAYS
Slopes steeper than 3:1	7 DAYS
Slopes 3:1 or flatter	14 DAYS
All other areas with slopes flatter than 4:1	14 DAYS

NOTE WELL:

ANY AREAS ON-SITE WITHOUT ACTIVITY SHALL BE STABILIZED WITHIN 15 WORKING DAYS AND AS ABOVE. ALL SLOPES MUST BE STABILIZED WITHIN 21 CALENDAR DAYS OF CEASE OF ANY ACTIVITY.

DETAILS SHOWN ARE TYPICAL OF INSTALLATIONS REQUIRED BY CITY AND COUNTY. THIS SHEET DOES NOT PURPORT TO SHOW ALL REQUIRED CONSTRUCTION DETAILS, BUT RATHER SERVES AS A GUIDE. THE CONTRACTOR IS RESPONSIBLE FOR ADHERING TO ALL CITY, COUNTY AND STATE CODES AND CONSTRUCTION STANDARDS.

No geotechnical testing has been performed on site. No warranty is made for suitability of subgrade, and undercut and any required replacement with suitable material shall be the responsibility of the contractor.

NOTE WELL:
1.All storm water runoff from built upon areas (i.e. impervious surfaces) to be directed to the storm sewer collection system (i.e. storm inlets or pond forebays) by swales, overland flow, additional grading, or landscaping inlets.

30 15 0 30
SCALE IN FEET: 1"= 30'

REV. NO.	REVISIONS	DATE
1	REVISED AS PER REVIEW COMMENTS	5-08-14

Copyright © Hanover Design Services, P.A. All rights reserved. Reproduction or use of the contents of this document, in whole or in part, without written consent of the Land Surveyor or Engineer, is prohibited. Only copies from the original of this document, marked with the original signature and original seal of the Surveyor or Engineer, shall be considered to be valid and true copies.

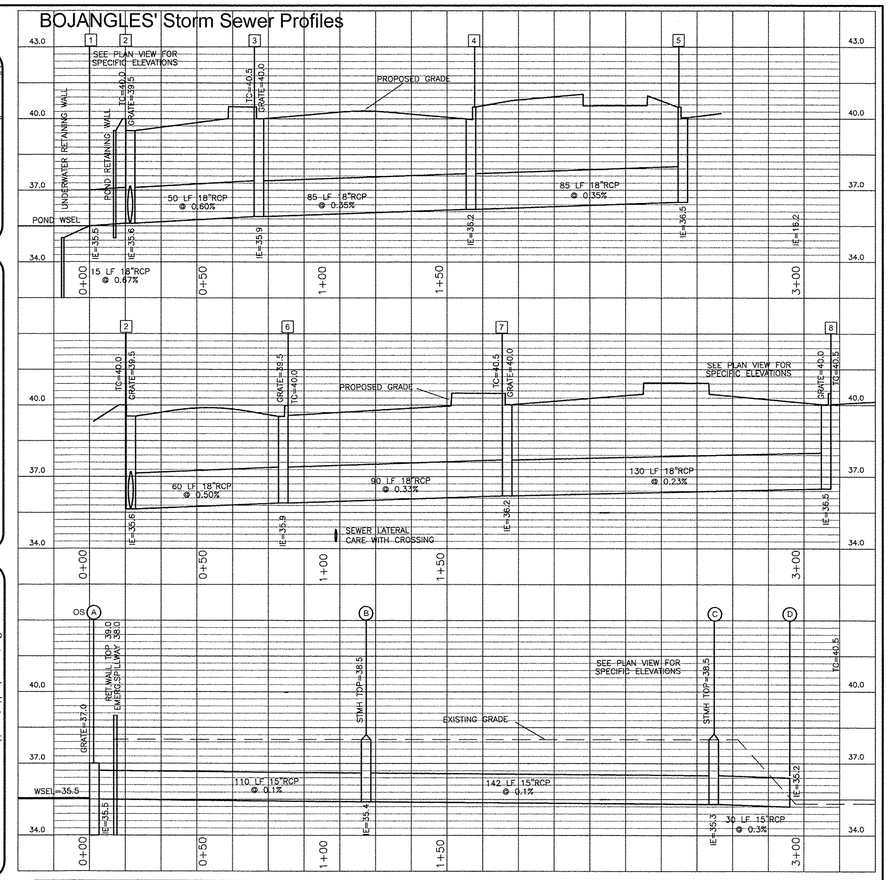

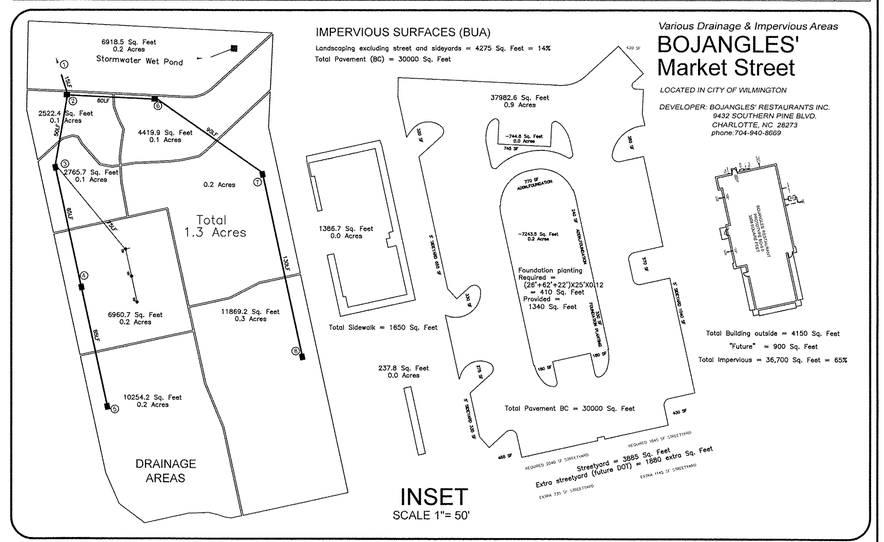

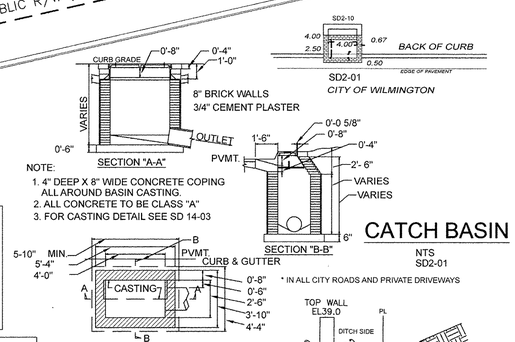

NOTE:
1. 4" DEEP X 8" WIDE CONCRETE COPING ALL AROUND BASIN CASTING.
2. ALL CONCRETE TO BE CLASS "A"
3. FOR CASTING DETAIL SEE SD 14-03

For each open utility cut of City streets, a $325 permit shall be required from the City prior to occupancy and/or project acceptance.

STORMWATER MANAGEMENT PLAN
APPROVED
CITY OF WILMINGTON
ENGINEERING DEPARTMENT
DATE _____
PERMIT # _____
SIGNED _____

Approved Construction Plan

	Name	Date
Planning		
Traffic		
Fire		

F:\ALL\PROJECT FOLDERS\BOJANGLES\LAKESIDE PARK\12503 SHT3.DWG

Stormwater and Erosion Control Measures
BOJANGLES' Market Street
LOCATED IN CITY OF WILMINGTON
SMITHVILLE TOWNSHIP
NEW HANOVER COUNTY, NORTH CAROLINA

NORTH CAROLINA PROFESSIONAL SEAL 20007 ENGINEER DAVID HOLLIS
5.08.14
dhollis@hdsllm.com

DEVELOPER: BOJANGLES' RESTAURANTS INC.
9432 SOUTHERN PINE BLVD.
CHARLOTTE, NC 28273 phone:704-940-8669

HANOVER DESIGN SERVICES, P.A.
LAND SURVEYORS, ENGINEERS & LAND PLANNERS
1123 FLORAL PARKWAY
WILMINGTON, N.C. 28403
PHONE: (910) 343-8002
LICENSE # C-0597

Date:	3-12-14
Scale:	1"= 30'
Drawn:	DSH
Checked:	DSH
Project No:	12820
Sheet No:	3
Of:	4

Various Drainage & Impervious Areas
BOJANGLES' Market Street
LOCATED IN CITY OF WILMINGTON
DEVELOPER: BOJANGLES' RESTAURANTS INC.
9432 SOUTHERN PINE BLVD.
CHARLOTTE, NC 28273
phone:704-940-8669

DESIGNER'S CERTIFICATION –

"I hereby certify that this plan has been prepared in accordance with the latest Wilmington Standards and Specifications for Stormwater Management and Chapter 20 of the Code of Ordinanances of the City of Wilmington."

Signature: [signature]

Printed Name and Title: David S. Hollis, PE, PLS

Date: 3-20-14

Registration Number: PE # 20007

OWNER'S / DEVELOPER'S CERTIFICATION:

"I / We hereby certify that any clearing, grading, construction or development, or all of these, will be done pursuant to this plan and that the applicable Stormwater Management conditions and requirements of the City of Wilmington, the State of North Carolina, and the Federal Government and its agencies are hereby made part of this plan."

Signature: [signature]

Printed Name and Title: Claude Clark, Director of Construction and Engineering, Bojangles' Restaurants, Inc.

Date: 3-20-14

NOTE WELL:
EROSION CONTROL DETAILS AND SPECIFICATIONS ARE AS PER THE "EROSION AND SEDIMENT CONTROL PLANNING AND DESIGN MANUAL" OF THE STATE OF NORTH CAROLINA, DEPARTMENT OF ENVIRONMENT AND NATURAL RESOURCES, LATEST EDITION. PRACTICE NUMBERS REFER TO THIS MANUAL.

DETAILS SHOWN ARE TYPICAL OF INSTALLATIONS REQUIRED BY THE CITY OF WILMINGTON. THIS SHEET DOES NOT PURPORT TO SHOW ALL REQUIRED CONSTRUCTION DETAILS, BUT RATHER SERVES AS A GUIDE. THE CONTRACTOR IS RESPONSIBLE FOR ADHERING TO ALL CITY AND STATE CODES AND CONSTRUCTION STANDARDS.

FEEDER ROOTS
FEEDER ROOTS ARE LOCATED AT "DRIPLINE" OF TREE AND PROVIDE TREE WITH MOISTURE AND NUTRIENTS. SEE NOTE 1 & NOTE 3

STRUCTURAL ROOTS
STRUCTURAL ROOTS LOCATED NEAR BASE OF TRUNK ARE NEEDED TO GIVE SUPPORT TO ENTIRE TREE. IF REMOVED, TREE CANFAIL AND DAMAGE PROPERTY. SEE NOTE 2 & NOTE 3

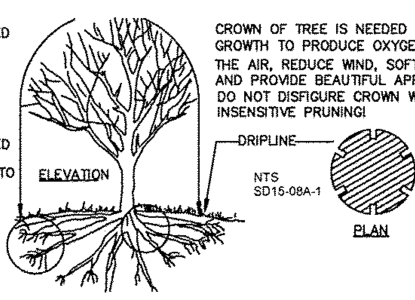

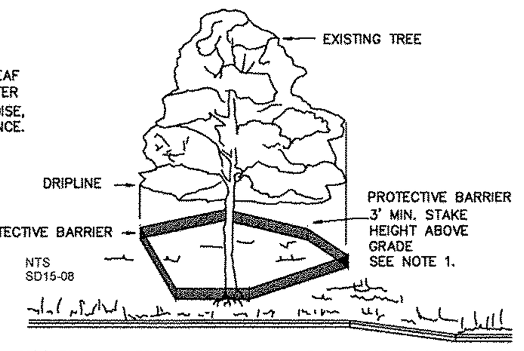

TREES TO BE SAVED WILL BE CLEARLY MARKED PRIOR TO CONSTRUCTION AND A PROTECTIVE BARRIER IS TO BE INSTALLED AT THE DRIPLINE.
DRIP LINE – THE AREA OF SOIL DIRECTLY BENEATH THE TREE EXTENDING OUT TO THE TIPS OF THE OUTERMOST BRANCHES.

TREE PROTECTION DURING CONSTRUCTION –
1. CLEARLY MARK THE TREE TO BE SAVED PRIOR TO CONSTRUCTION AND ERECT A PROTECTIVE BARRIER AT THE DRIPLINE. DO NOT COMPACT SOIL BENEATH TREES. NO VEHICLE SHALL BE ALLOWED TO PARK UNDER TREES. NO HEAVY MATERIALS SHALL BE STORED BENEATH TREES. RESULTS OF COMPACTION CAUSE WATER AND AIR NOT TO REACH THE ROOTS AND THE TREE WILL DIE. THESE "FEEDING ROOTS" OCCUR WELL AWAY FROM THE BASE OF THE TREE TO THE EDGE OF THE OVERHEAD BRANCH CANOPY. DAMAGING THE BARK WITH LAWNMOWERS, CONSTRUCTION EQUIPMENT, OR ANYTHING ELSE IS PROHIBITED. THE PROTECTIVE BARRIER SHOULD PREVENT DAMAGE FROM OCCURING DURING CONSTRUCTION.
2. NO CUTTING OF LARGE STRUCTURAL ROOTS LOCATED NEAR THE BASE OF THE TRUNK. REMOVAL OF THESE ROOTS ALONG ONE SIDE IS OFTEN DONE BECAUSE OF A WALK, PAVING OR BUILDING WHICH IS BEING CONSTRUCTED. THESE ARE ESSENTIAL IN SUPPORTING THE TREE AND HOLDING IT UPRIGHT IN HIGH WINDS.
3. AVOID CUT AND FILL WITHIN DIAMETER OF TREE CROWN DURING EXCAVATION.

METHOD OF TREE PROTECTION DURING CONSTRUCTION
NTS

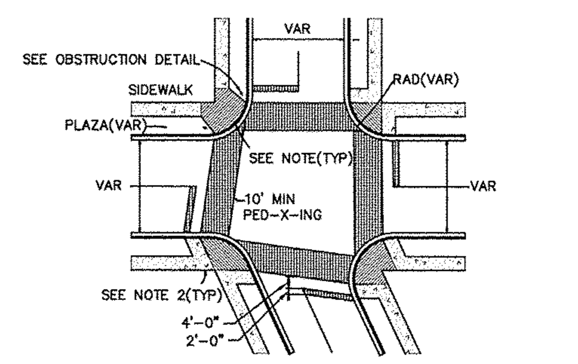

TYPICAL LOCATION OF WHEELCHAIR, PEDESTRIAN CROSSWALKS & STOP BARS

GUIDELINES FOR WHEELCHAIR RAMPS AND DEPRESSED CURBS(A)
NTS
SD8-10A

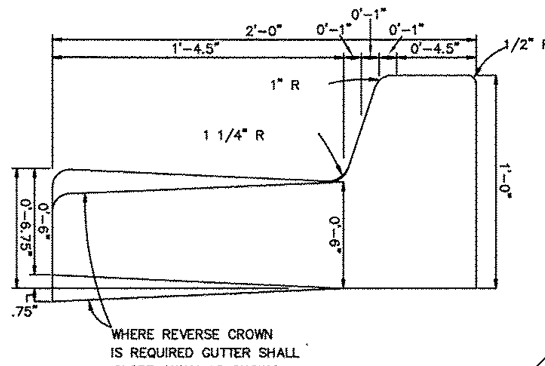

STANDARD CURB SECTION, TYPE "A"
NTS
SD7-01

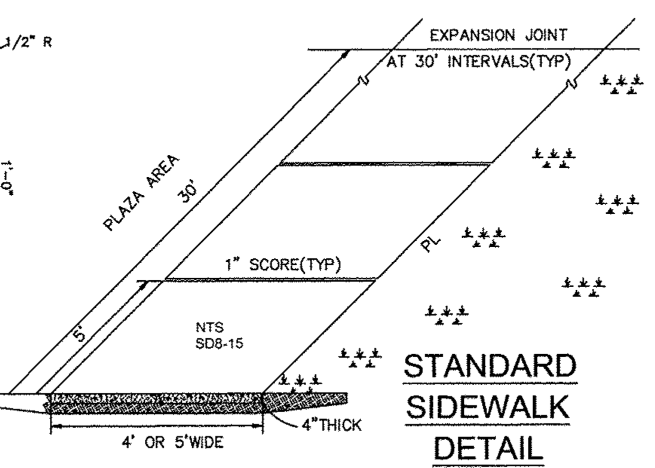

STANDARD SIDEWALK DETAIL

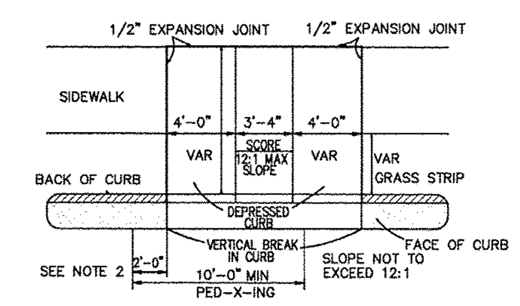

GUIDELINES FOR WHEELCHAIR RAMPS AND DEPRESSED CURBS(B)
NTS
SD8-10B

GENERAL NOTES

I. LOCATION OF WHEELCHAIR RAMPS:
1. IN ACCORDANCE WITH THE RATIFIED HOUSE BILL 1296, ALL STREET CURBS IN NORTH CAROLINA BEING CONSTRUCTED OR RECONSTUCTED FOR MAINTENANCE PROCEDURES, TRAFFIC OPERATIONS, REPAIRS, CORRECTION OF UTILITIES OR ALTERED FOR ANY REASON AFTER SEPTEMBER 1973 SHALL PROVIDE WHEELCHIR RAMPS FOR THE PHYSICALLY HANDICAPPED AT ALL INTERSECTIONS WHERE BOTH CURB AND GUTTER AND SIDEWALKS ARE PROVIDED AND AT OTHER MAJOR POINTS OF PEDESTRIAN FLOW.
2. WHEELCHAIR RAMPS SHOULD BE LOCATED AS INDICATED IN DETAIL DRAWINGS, HOWEVER EXISTING LIGHT POLES, FIRE HYDRANTS, DROP INLETS, ETC. MAY AFFECT PLACEMENT.

II. CONSTRUCTION NOTES:
1. NO SLOPE SHALL EXCEED 1"=1" (12:1) ON THE RAMP OR SIDEWALK.
2. IN NO CASE SHALL THE WIDTH OF WHEELCHAIR RAMPS BE LESS THAN 40" (3'-4"). WIDTHS MAY EXCEED 40" IF NECESSARY.
3. USE CLASS "A" CONCRETE WITH THE SURFACE HAVING A ROUGH, NON-SKID TYPE FINISH.
4. 1/2" EXPANSION JOINT WILL BE REQUIRED WHERE THE CONCRETE WHEELCHAIR RAMP JOINS ANY RIGID PAVEMENT OR STRUCTURE.
5. CONSTRUCTION METHODS SHALL CONFORM WITH THOSE OF THE GOVERNING BODY WHICH HAS JURISDICTION OF THE PARTICULAL STREET.

III. ADDITIONAL NOTES:
1. THE INSIDE PEDESTRIAN CROSSWALK LINES SHALL BE ESTABLISHED BY BISECTING THE INTERSECTION RADI WHERE MARKED (SEE NOTE 6).
2. THE WHEELCHAIR RAMP SHALL BE LOCATED SO THAT THE BEGINNING OF THE WHEEL CHAIR RAMP WILL BE TWO FEET FROM THE INSIDE PEDESTRIAN CROSSWALK LINE.
3. THE WIDTH OF THE PEDESTRIAN CROSWALK SHALL BE 10 FEET UNLESS A GREATER WIDTH IS REQUIRED TO ACCOMMODATE THE PEDESTRIAN TRAFFIC.
4. STOP BARS SHALL BE USED WHERE IT IS IMPORTANT TO INDICATE THE POINT BEHIND WHICH VEHICLES ARE REQUIRED TO STOP IN COMPLIANCE WITH A TRAFFIC SIGNAL, STOP SIGN, OR OTHER LEGAL REQUIREMENTS.
5. PARKING SHALL BE ELIMINATED A MINIMUM OF 20 FEET BACK OF PEDESTRIAN CROSSWALK.
6. ALL PAVEMENT MARKINGS SHALL BE IN ACCORDANCE WITH THE LATEST EDITION OF THE MANUAL OF UNIFORM TRAFFIC CONTROL DEVICES PUBLISHED BY THE FEDERAL HIGHWAY ADMINISTRATION. THIS IS AVAILABLE FROM THE SUPERINTENDENT OF DOCUMENTS, U.S GOVERNMENT PRINTING OFFICE, WASHINGTON, D.C. 20402.

GUIDELINES FOR WHEELCHAIR RAMPS
SD8-09

NOTE WELL:
1) OUTLET PROTECTION & ROCK STABILIZATION APRONS REQUIRED AS SHOWN ON PLAN.
2) SLOPE IS FLAT (0%) FOR A MINIMUM OF 2LF 2' MIN. BOTTOM WIDTH.

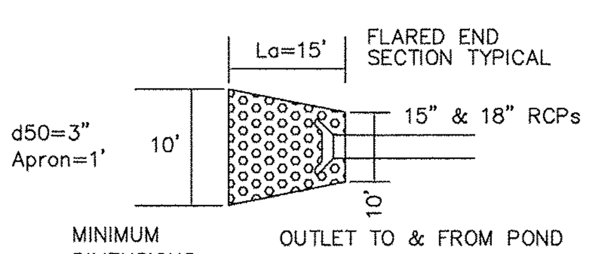

OUTLET PROTECTION and ROCK STABILIZATION APRON
NOT TO SCALE

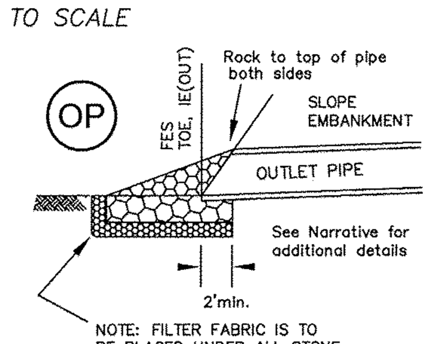

NOTE: FILTER FABRIC IS TO BE PLACED UNDER ALL STONE OUTLET PROTECTION.
USE NICOLON MIRAFI 600X POLYPROPYLENE, OR EQUIVALENT

OUTLET PROTECTION - SIDE VIEW
NTS

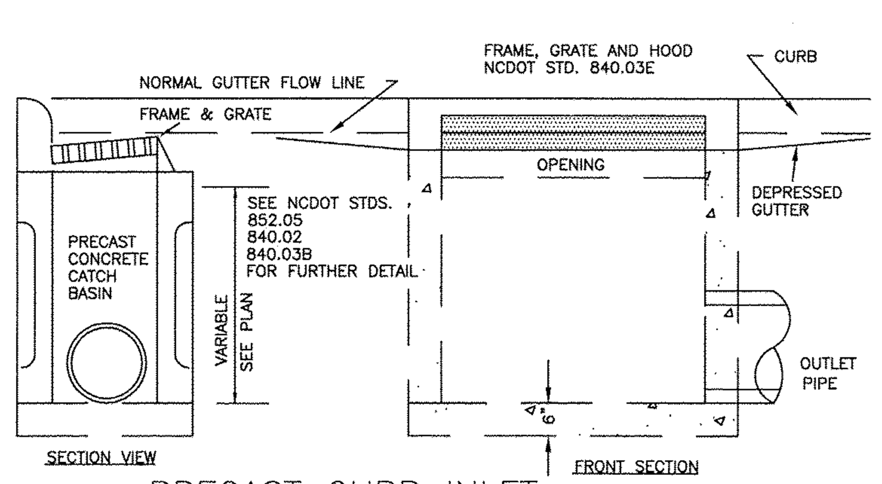

PRECAST CURB INLET
N.T.S.

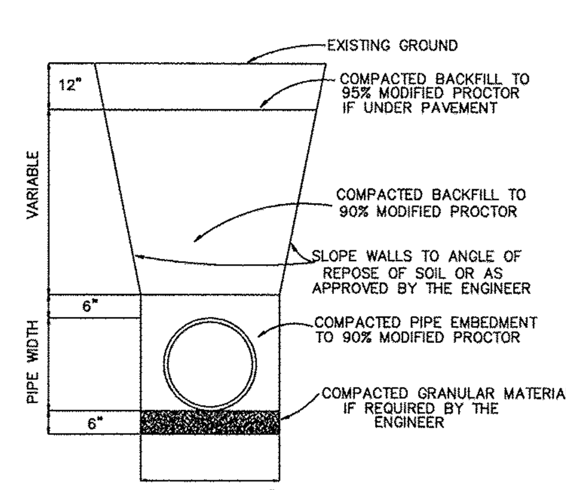

STANDARD PIPE TRENCH DETAIL
NTS
SD1-07

IP HARDWARE CLOTH & GRAVEL INLET PROTECTION (Temporary)
Specification # 6.51 – Construction Specifications

As fabric, use a 19-gauge hardware cloth with 1/4 inch mesh openings, with a total height of 2 feet minimum. The sediment control stone, with a height of 16 inches, should have an outside slope of 2:1.
For stakes, use steel T posts of 1.25 lb/linear foot with a minimum length of 5 ft., driven 2 ft. into the ground, maximum spacing of 4 feet.

Specifications
1. Uniformly grade a shallow depression approaching the inlet.
2. Drive 5-foot steel posts 2 feet into the ground surrounding the inlet. Space posts evenly around the perimeter of the inlet, a maximum of 4 feet apart.
3. Surround the posts with wire mesh hardware cloth. Secure the wire mesh to the steel posts at the top, middle, and bottom. Placing a 2-foot anchoring flap of the mesh under the gravel is recommended.
4. Place clean gravel (NCDOT #5 or #57 stone) on a 2:1 slope with a height of 16 inches around the wire, and smooth to an even grade.
5. Once the contributing drainage area has been stabilized, remove the accumulated sediment, and establish final grades.
6. Compact the area properly and stabilize with groundcover.

Maintenance
Inspect the barrier after each significant rain and make repairs at needed.
Sediment to be removed from behind the any inlet protection devices when it becomes 0.5' deep.
Remove sediment from the area as necessary to provide adequate storage volume for the next rain. Take care not to damage or undercut the hardware cloth during sediment removal.
When the contributing drainage area has been adequately stabilized, remove all materials and any unstable sediment and dispose of them properly. Bring the disturbed area to the grade of the drop inlet and smooth and compact it.
Appropriately stabilize all bare areas around the inlet.

Land Grading
Specification # 6.02 – Construction Specifications
1. Construct and maintain all erosion and sedimentation control practices and measures in accordance with the approved sedimentation control plan and construction schedule.
2. Remove good topsoil from areas to be graded and filled, and preserve it for use in finishing the grading of all critical areas.
3. Scarify areas to be topsoiled to a minimum depth of 2 inches before placing topsoil (Practice 6.04, Topsoiling).
4. Clear and grub areas to be filled to remove trees, vegetation, roots, or other objectionable material that would affect the planned stability of the fill.
5. Ensure that fill material is free of brush, rubbish, rocks, logs, stumps, building debris, and other materials inappropriate for constructing stable fills.
6. Place all fill in layers not to exceed 9 inches in thickness, and compact the layers as required to reduce erosion, slippage, settlement, or other related problems.
7. Do not incorporate frozen material or soft, mucky, or highly compressible materials into fill slopes.
8. Do not place fill on a frozen foundation, due to possible subsidence and slippage.
9. Keep diversions and other water conveyance measures free of sediment during all phases of development.
10. Handle seeps or springs encountered during construction in accordance with approved methods (Practice 6.81, Subsurface Drain).
11. Permanently stabilize all graded areas immediately after final grading is completed on each area in the grading plan. Apply temporary stabilization measures on all graded areas when work is to be interrupted or delayed for 30 working days or longer.
12. Ensure that topsoil stockpiles, borrow areas, and spoil areas are adequately protected from erosion with temporary and final stabilization measures, including sediment fencing and temporary seeding as necessary.

Maintenance
Periodically check all graded areas and the supporting erosion and sedimentation control practices, especially after heavy rainfalls. Promptly remove all sediment from diversions and other water-disposal practices. If washouts or breaks occur, repair them immediately. Prompt maintenance of small eroded areas before they become significant gullies is an essential part of an effective erosion and sedimentation control plan.

Note: Metal stakes are minimum 4' long, 1.33 lb/LF steel.

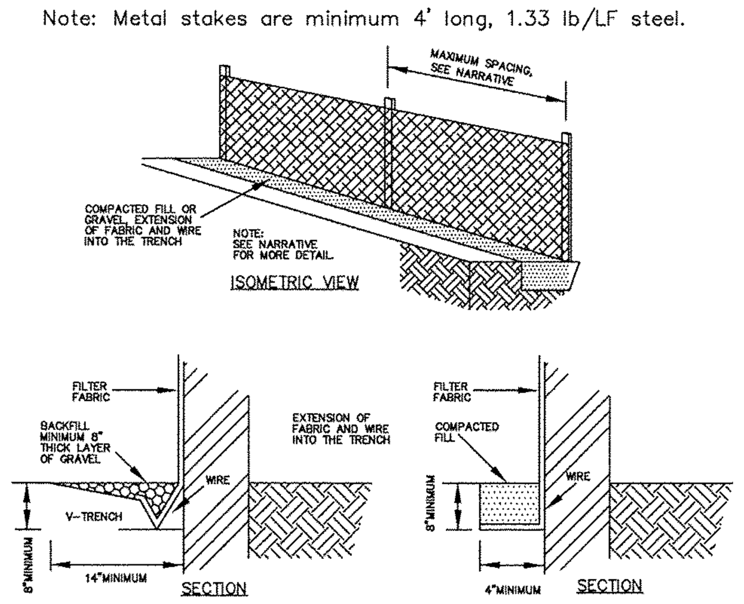

SF SEDIMENT FENCE (SILT FENCE)
NTS
PRACTICE 6.62

STABILIZATION TIME FRAMES:

SITE AREA DESCRIPTION	STABILIZATION
Perimeter dikes, swales, ditches and slopes	7 DAYS
High Quality Water (HQW) Zones	7 DAYS
Slopes steeper than 3:1	7 DAYS
Slopes 3:1 or flatter	14 DAYS
All other areas with slopes flatter than 4:1	14 DAYS

NOTE WELL:
ANY AREAS ON-SITE WITHOUT ACTIVITY SHALL BE STABILIZED WITHIN 15 WORKING DAYS OR 21 CALENDAR DAYS AND AS ABOVE. ALL SLOPES MUST BE STABILIZED WITHIN 21 CALENDAR DAYS OF CEASE OF ANY ACTIVITY.

DETAILS SHOWN ARE TYPICAL OF INSTALLATIONS REQUIRED BY CITY AND COUNTY. THIS SHEET DOES NOT PURPORT TO SHOW ALL REQUIRED CONSTRUCTION DETAILS, BUT RATHER SERVES AS A GUIDE. THE CONTRACTOR IS RESPONSIBLE FOR ADHERING TO ALL CITY, COUNTY AND STATE CODES AND CONSTRUCTION STANDARDS.

No geotechnical testing has been performed on site. No warranty is made for suitability of subgrade, and undercut and any required replacement with suitable material shall be the responsibility of the contractor.

Table 6.11s – Seeding No. 4CP for:
Well-Drained Sandy loams to Dry Sands, Coastal Plain; Low to Medium-Care Lawns
Seeding mixture
Species – Centipedegrass – Rate – 10-20 lb/acre (seed) or 33 bu/acre (sprigs)
Seeding dates – Mar. – June. (Sprigging can be done through July where water is available for irrigation.)
Soil amendments – Apply lime and fertilizer according to soil test, or apply 300 lb/acre 10-10-10.
Sprigging – Plant sprigs in furrows with a tractor-drawn transplanter, or broadcast by hand.
Furrows should be 4-6 inches deep and 2ft apart. Place sprigs about 2 ft. apart in the row with one end at or above ground level (Figure 6.11d).
Broadcast at rates shown above, and press sprigs into the top 1 1/2 inches of soil with a disk set straight so that sprigs are not brought back toward the surface.
Mulch – Do not mulch
Maintenance – Fertilize very sparingly– 20 lb/acre nitrogen in spring with no phosphorus. Centipedegrass cannot tolerate high pH or excess fertilizer.

Table 6.11t – Seeding No. 5CP for: Well-Drained Sandy Loams to Dry Sands; Low Maintenance
Seeding mixture

Species Rate	(lb/acre)
Pensacola Bahiagrass	50
Sericea lespedeza	30
Common Bermudagrass	10
German millet	10

Seeding notes
1. Where a neat appearance is desired, omit sericea
2. Use common Bermudagrass only on isolated sites where it cannot become a pest. Bermudagrass may be replaced with 5 lb/acre centipedgrass.

Seeding dates – Apr. 1 – July 15
Soil amendments – Apply lime and fertilizer according to soil tests, or apply 3,000 lb/acre ground agricultural limestone and 500 lb/acre 10-10-10 fertilizer.
Mulch
Apply 4,000 lb/acre grain straw or equivalent cover of another suitable mulch. Anchor by tacking with asphalt, roving and netting or by crimping with a mulch anchoring tool. A disk with blades set nearly straight can be used as a mulch anchoring tool.
Maintenance – Refertilize the following Apr. with 50 lb/acre nitrogen. Repeat as growth requires. May be moved only once a year. Where a neat appearance is desired, omit sericea and now as often as needed.

Table 6.11v – Seeding No. 7CP for: Grass-lined Channels; Coastal Plain
Seeding Mixture
Species – Common Bermudagrass – Rate – 40-80 (1/2 lb/1,000 ft)
Seeding dates – Coastal Plain; Apr – July
Soil amendments – Apply lime and fertilizer according to soil tests, or apply 3,000 lb/acre ground agricultural limestone and 500 lb/acre 10-10-10 fertilizer.
Mulch – Use jute, excelsior matting, or other effective channel lining material to cover the bottom of channels and ditches. The lining should extend above the highest calculated depth of flow. On channel side slopes above this height, and in drainages not requiring temporary linings, apply 4,000 lb/acre grain straw and anchor straw by stapling netting over the top.
Mulch and anchoring materials must be allowed to wash down slopes where they can clog drainage devices.
Maintenance –A minimum of 3 weeks is required for establishment. Inspect and repair mulch frequently. Refertilize the following Apr. with 50 lb/acre nitrogen.

Refer to Appendix 8.02 for botanical names

Sediment Fence (Silt Fence) SF
Specification 6.62 – Construction Specifications
MATERIALS
1. Use a synthetic filter fabric or a pervious sheet of polypropylene, nylon, polyester, or polyethylene yarn, which is certified by the manufacturer or supplier as conforming to the requirements shown in Table 6.62b. Synthetic filter fabric should contain ultraviolet ray inhibitors and stabilizers to provide a minimum of 6 months of expected usable construction life at a temperature range of 0 to 120 F.
2. Ensure that posts for sediment fences are 1.33 lb/linear ft steel with a minimum length of 4 ft. Make sure that steel posts have projections to facilitate fastening the fabric.
3. For reinforcement of standard strength filter fabric, use wire fence with a minimum 14 gauge and a maximum mesh spacing of 6 inches.

Table 6.62b
Specifications For Sediment Fence Fabric
Physical Property Requirements
Filtering Efficiency – 85% (mm)
Tensile Strength at Standard Strength– 30 lb/lin in (min)
Extra Strength– 50 lb/lin in (mm)
Slurry Flow Rate – 0.3 gal/sq ft/min (min)

CONSTRUCTION
1. Construct the sediment barrier of standard strength or extra strength synthetic filter fabrics.
2. Ensure that the height of the sediment fence does not exceed 18 inches above the ground surface. (Higher fences may impound volumes of water sufficient to cause failure of the structure.)
3. Construct the filter fabric from a continuous roll cut to the length of the barrier to avoid joints. When joints are necessary, securely fasten the filter cloth only at a support post with overlap to the next post.
4. Support standard strength filter fabric by wire mesh fastened securely to the up slope side of the posts using heavy duty wire staples at least 1 inch long, or tie wires. Extend the wire mesh support to the bottom of the trench.
5. When a wire mesh support fence is used, space posts a maximum of 8 ft apart. Support posts should be driven securely into the ground to a minimum of 18 inches.
6. Extra strength filter fabric with 6ft post spacing does not require wire mesh support fence. Staple or wire the filter fabric directly to posts.
7. Excavate a trench approximately 4 inches wide and 8 inches deep along the proposed line of posts and upslope from the barrier (figure 6.62a).
8. Backfill the trench with compacted soil or gravel placed over the filter fabric.
9. Do not attach filter fabric to existing trees.

Maintenance
Inspect sediment fences at least once a week and after each rainfall. Make any required repairs immediately.
Should the fabric of a sediment fence collapse, tear, decompose or become ineffective, replace it promptly. Replace burlap every 60 days.
Sediment to be removed from behind the any Silt Fence when it becomes 0.5' deep.
Remove sediment deposits as necessary to provide adequate storage volume for the next rain and to reduce pressure on the fence. Take care to avoid undermining the fence during cleanout.
Remove all fencing materials and unstable sediment deposits and bring the area to grade and stabilize it after the contributing drainage area has been properly stabilized.

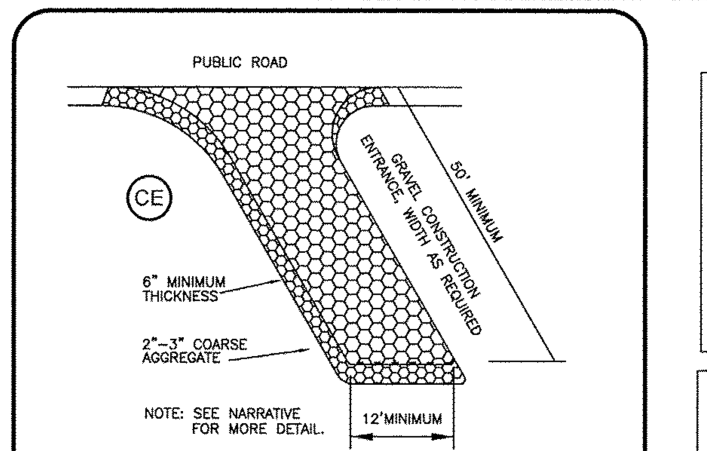

TEMPORARY GRAVEL CONSTRUCTION ENTRANCE/EXIT DETAIL
N.T.S.

Permanent Seeding
Specifications # 6.11 – Specifications

Seedbed Requirements
Establishment of vegetation should not be attempted on sites that are unsuitable due to inappropriate soil texture (Table 6.11a), poor drainage, concentrated overland flow, or steepness of slope until measures have been taken to correct these problems.
To maintain a good stand of vegetation, the soil must meet certain minimum requirements as a growth medium. The existing soil should have these criteria:

– Enough fine-grained (silt and clay) material to maintain adequate moisture and nutrient supply (available water capacity of at least .05 inches water to I inch of soil).
– Sufficient pore space to permit root penetration.
– Sufficient depth of soil to provide an adequate root zone. The depth to rock or impermeable layers such as hardpans should be 12 inches or more, except on slopes steeper than 2:1 where the addition of soil is not feasible.
– A favorable pH range for plant growth, usually 6.0-6.5.
– Freedom from large roots, branches, stones, large clods of earth, or trash of any kind. Clods and stones may be left on slopes steeper than 3:1 if they are to be hydroseeded.

If any of the above criteria are not met-i.e., if the existing soil is too coarse, dense, shallow or acidic to foster vegetation-special amendments are required. The soil conditioners described below may be beneficial or, preferably, topsoil may be applied in accordance with Practice 6.04, Topsoiling.

Soil Conditioners
In order to improve the structure or drainage characteristics of a soil, the following material may be added. These amendments should only be necessary where soils have limitations that make them poor for plant growth or for fine turf establishment (see Chapter 3, Vegetative Considerations).

Peat-Appropriate types are sphagnum moss peat, hypnum moss peat, reedsedge peat, or peat humus, all from fresh-water sources. Peat should be shredded and conditioned in storage piles for at least 6 months after excavation.
Sand-clean and free of toxic materials
Vermiculite-horticultural grade and free of toxic substances.
Rotted manure-stable or cattle manure not containing undue amounts of straw or other bedding materials.
Thoroughly rotted sawdust– free of stones and debris. Add 6 lb. Of nitrogen to each cubic yard.
Sludge-Treated sewage and industrial sludges are available in various forms: these should be used only in accordance with local, State and Federal regulations.

Species Selection
Use the key to Permanent Seeding Mixtures (Table 6.11b) to select the most appropriate seeding mixture based on the general site and maintenance factors. A listing of species, including scientific names and characteristics, is given in Appendix 8.02.

Seedbed Preparation
Install necessary mechanical erosion and sedimentation control practices before seeding, and complete grading according to the approved plan.
Lime and fertilizer needs should be determined by soil tests. Soil testing is performed free of charge by the North Carolina Department of Agriculture soil testing laboratory. Directions, sample cartons, and information sheets are available through county agricultural extension offices or from NCDA. Because the NCDA soil testing lab requires 1-6 weeks for sample turn-around, sampling must be planned well in advance of final grading. Testing is also done by commercial laboratories.
When soil test are not available, follow rates suggested on the individual specification sheet for the seeding mix chosen (Tables 6.11c through 6.11v).
Applications rates usually fall into the following ranges:
– Ground agricultural limestone
  Light-textured, sandy soils; 1-1 1/2 tons/acre
  Heavy textured, clayey soils 2-3 tons/acre
– Fertilizer:
  Grasses 800-1200 lb/acre of 10-10-10 (or the equivalent)
  Grass-legume mixtures: 800-1200 lb/acre of 5-10-10 (or the equivalent)
Apply lime and fertilizer evenly and incorporate into the top 4-6 inches of soil by disking or other suitable means. Operate machinery on the contour. When using a hydroseeder, apply lime and fertilizer to a rough, loose surface.

Roughen surfaces according to Practice 6.03, Surface Roughening.
Complete seedbed preparation by breaking up large clods and raking into a smooth, uniform surface (slope less than 3:1) Fill in or level depressions than can collect water. Broadcast seed into a freshly loosened seedbed that has not been sealed by rainfall.

Note Well: See Landscaping Plan for additional specifications. Landscaping Plan by others.

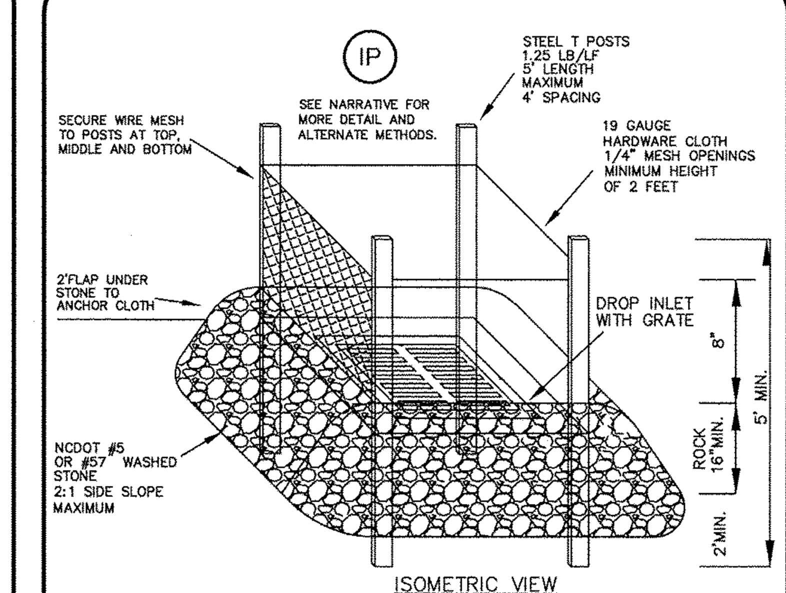

HARDWARE CLOTH & GRAVEL INLET PROTECTION
NTS PRACTICE 6.51

CE Temporary Gravel Construction Entrance/Exit
Specification # 6.06 – Construction Specifications

1. Clear the entrance and exit area of all vegetation, roots and other objectionable material and properly grade it.
2. Place the gravel to the specific grade and dimensions shown on the plans and smooth it.
3. Provide drainage to carry water to a sediment trap or other suitable outlet.
4. Use geotextile fabrics because they improve stability of the foundation in locations subject to seepage or high water table.

Maintenance
Maintain the gravel pad in a condition to prevent mud or sediment from leaving the construction site. This may require periodic topdressing with 2-inch stone. After each rainfall, inspect any structure used to trap sediment and clean it out as necessary. Immediately remove all objectionable materials spilled, washed, or tracked onto public roadways.

Temporary Seeding
Specification # 6.10 – Specifications

Complete grading before preparing seedbeds and install all necessary erosion control practices, such as dikes, waterways and basins. Minimize steep slopes because they make seedbed preparation difficult and increase the erosion hazard. If soils become compacted during grading, loosen them to a depth of 6-8 inches using a ripper, harrow, or chisel plow.

Seedbed Preparation
Good seedbed preparation is essential to successful plant establishment. A good seedbed is well-pulverized, loose and uniform. Where hydroseeding methods are used, the surface may be left with a more irregular surface of large clods and stones.
Liming – Apply lime according to soil test recommendations. If the pH (acidity) of the soil is not known, an application of ground agricultural limestone at the rate of 1 to 1 1/2 tons/acre on coarse-textured soils and 2-3 tons/acres on fine-textured soils is usually sufficient. Apply limestone uniformly and incorporate into the top 4-6 inches of soil. Soils with a pH of 6 or higher need not be limed.
Fertilizer– Base application rates on soil tests. When these are not possible, apply a 10-10-10 grade fertilizer at 700-1,000 lb./acre. Both fertilizer and lime should be incorporated into the top 4-6 inches of soil. If a hydraulic seeder is used, do not mix seed and fertilizer more than 30 minutes before application.
Surface roughening– If recent tillage operations have resulted in a loose surface, additional roughening may not be required except to break up large clods. If rainfall causes the surface to become sealed or crusted, loosen it just prior to seeding by disking, raking, harrowing, or other suitable methods, Groove or furrow slopes steeper than 3:1 on the contour before seeding (Practice 6:03, Surface Roughening).

Plant Selection
Select an appropriate species or species mixture from Table 6.10a, for seeding in late winter and early spring, Table 6.10b for summer, and Table 6.10c for fall.

Seeding
Evenly apply seed using a cyclone seeder (broadcast), drill, cultipacker seeder, or hydroseeder. Use seeding rates given in Table 6.10a-6.10c. Broadcast seeding and hyroseeding are appropriate for steep slopes where equipment cannot be driven. Hand broadcasting is not recommended because of the difficulty in achieving a uniform distribution. Small grains should be planted no more than 1 inch deep, and grasses and legumes no more than 1/2 inch. Broadcast seed must be covered by raking or chain dragging, and then lightly firmed with a roller or cultipacker. Hydroseeded mixtures should include a wood fiber (cellulose) mulch.

Mulching
The use of appropriate mulch will help ensure establishment under normal conditions and is essential to seeding success under harsh site condition (Practice 6.14, Mulching). Harsh site conditions include:
–seeding in fall for winter cover (wood fiber mulches are not considered adequate for this use),
–slopes steeper than 3:1,
–excessively hot or dry weather,
–adverse soils(shallow, rocky, or high in clay or sand), and
–areas receiving concentrated flow.
If the area to be mulched is subject to concentrated waterflow, as in channels, anchor mulch with netting (Practice 6.14, Mulching).

Table 6.10a – Temporary Seeding Recommendation for Late Winter and Early Spring
Seeding mixture
Species– Rye(grain), Annual lespedeza (Kobe in Piedmont and Coastal Plain
Rate (lb/acre)– 120
Omit annual lespedeza when duration of temporary cover is not to extend beyond June
Seeding dates-Coastal Plain – Dec. 1 – Apr. 15.
Soil amendments– Follow recommendations of soil tests or apply 2,000 lb/acre ground agricultural limestone and 750 lb/acre 10-10-10 fertilizer.
Mulch-Apply 4,000lb/acre straw. Anchor straw by tacking with asphalt, netting or a mulch anchoring tool. A disk with blades set nearly straight can be used as a mulch anchoring tool.
Maintenance – Refertilize if growth is not fully adequate. Reseed, refertilize and mulch immediately following erosion or other damage.

Table 6.10b – Temporary Seeding Recommendations for Summer
Seeding mixture
Species-German millet
Rate(lb/acre)– 40
Seeding dates-Coastal Plain– Apr. 15-Aug. 15
Soil amendments-Follow recommendations of soil tests or apply 2,000 lb/acre ground agricultural limestone and 750 lb/acre 10-10-10 fertilizer.
Mulch –Apply 4,000 lb/acre straw. Anchor straw by tacking with asphalt, netting or a mulch anchoring tool. A disk with blades set nearly straight can be used as a mulch anchoring tool.
Maintenance-Refertilize if growth is not fully adequate. Reseed, refertilize and mulch immediately following erosion or other damage.

Table 6.10c – Temporary Seeding Recommendation for Fall
Seeding mixture
Species-Rye(grain)
Rate(lb/acre) – 120
Seeding dates – Coastal Plain and Piedmont-Aug 15 – Dec. 30
Soil amendments – Follow soil tests or apply 2,000 lb./acre ground agriculturel limestone and 1,000 lb/acre 10-10-10 fertilizer.
Mulch– Apply 4,000 lb/acre straw. Anchor straw by tacking with asphalt, netting, or a mulch anchoring tool. A disk with blades set nearly straight can be used as a mulch anchoring tool.
Maintenance– Repair and refertilize damaged areas immediately. Topdress with 50 lb/acre of nitrogen in March, if it is necessary to extend temporary cover beyond June 15, overseed with 50 lb/acre Kobe (Piedmont and Coastal Plain)

Approved Construction Plan

	Name	Date
Planning		
Traffic		
Fire		

STORMWATER MANAGEMENT PLAN APPROVED
CITY OF WILMINGTON
ENGINEERING DEPARTMENT
DATE ________
PERMIT # ________
SIGNED ________________

NOTE: THIS PLAN TO BE UTILIZED AND REVIEWED ONLY IN CONJUNCTION WITH THE WRITTEN NARRATIVE, WHICH IS AN INTEGRAL PART OF THIS EROSION AND SEDIMENT CONTROL PLAN.

For each open utility cut of City streets, a $325 permit shall be required from the City prior to occupancy and/or project acceptance.

DETAILS and NOTES
BOJANGLES' Carolina Beach Road
LOCATED IN CITY OF WILMINGTON
HARNETT TOWNSHIP
NEW HANOVER COUNTY, NORTH CAROLINA

REV. NO.	REVISIONS	DATE

NORTH CAROLINA PROFESSIONAL SEAL 20007 ENGINEER DAVID S. HOLLIS
5.09.14
dhollis @ hdsllm.com

DEVELOPER: BOJANGLES' RESTAURANTS INC.
9432 SOUTHERN PINE BLVD.
CHARLOTTE, NC 28273 phone: 704-940-8669

HANOVER DESIGN SERVICES, P.A.
LAND SURVEYORS, ENGINEERS & LAND PLANNERS
1123 FLORAL PARKWAY
WILMINGTON, N.C. 28403
PHONE: (910) 343-8002
LICENSE # C-0597

Date:	4-10-12
Scale:	1"= 30'
Drawn:	DSH
Checked:	DSH
Project No:	12503
Sheet No:	4
Of:	4

Copyright ©, Hanover Design Services, P.A. All rights reserved. Reproduction or use of the contents of this document, or additions or deletions to this document, in whole or part, without written consent of the Land Surveyor or Engineer, is prohibited. Only copies from the original of this document, marked with the original signature and original seal of the Surveyor or Engineer, shall be considered to be valid and true copies.

F: ALL\PROJECT FOLDERS\BOJANGLES\LAKESIDE PARK\12503 SHT4.DWG

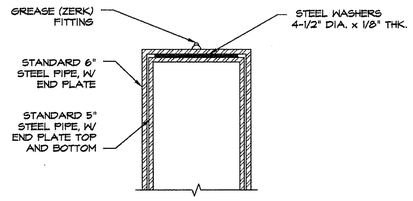

12 GATE DETAIL
SCALE: 1 1/2"=1'-0"

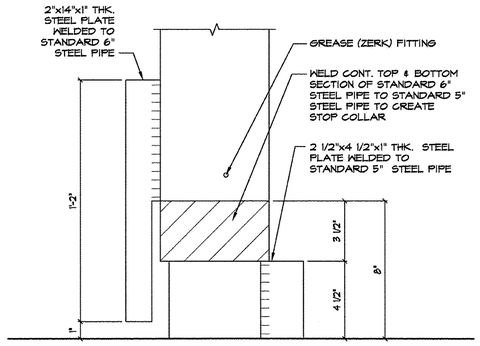

11 GATE DETAIL
SCALE: 1 1/2"=1'-0"

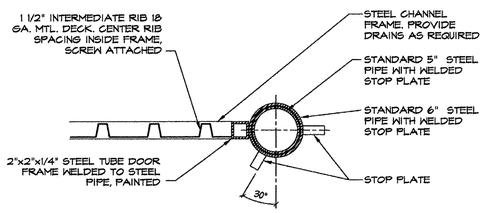

6 GATE DETAIL
SCALE: 1 1/2"=1'-0"

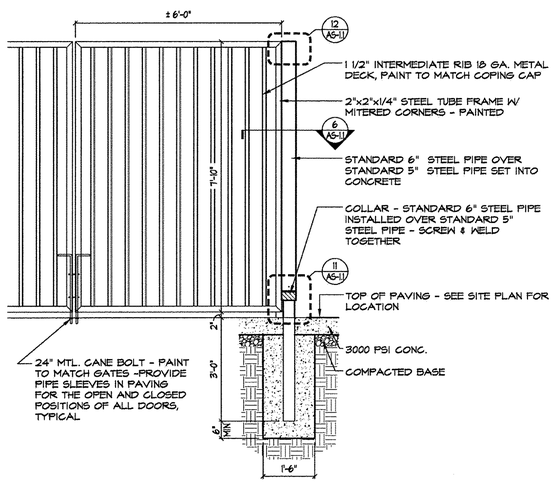

3 GATE ELEVATION DETAIL
SCALE: 1/2"=1'-0"

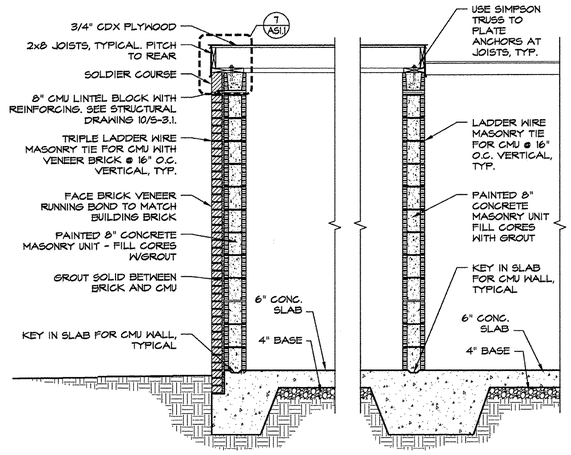

10 WASTE ENCLOSURE SECTION
SCALE: 1/2"=1'-0"

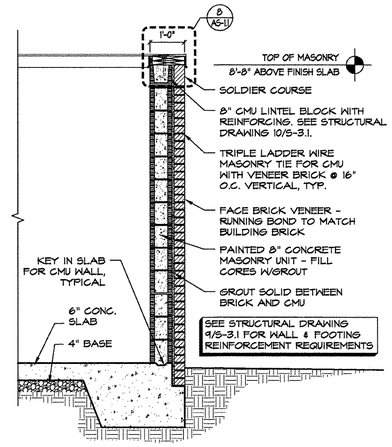

9 WASTE ENCLOSURE WALL SECTION
SCALE: 1/2"=1'-0"

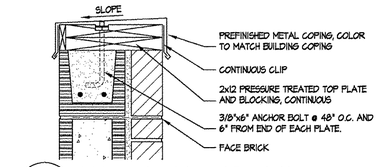

8 SECTION DETAIL
SCALE: 1 1/2"=1'-0"

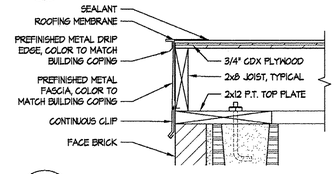

7 SECTION DETAIL
SCALE: 1 1/2"=1'-0"

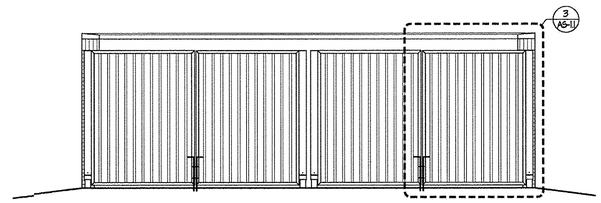

5 ALTERNATE #2 WASTE ENCLOSURE ELEVATION
SCALE: 1/4"=1'-0"

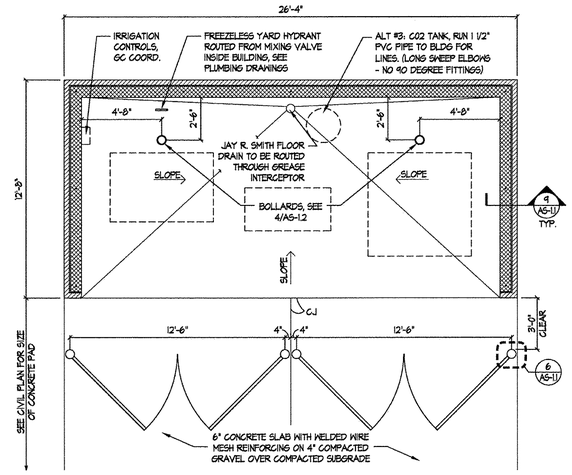

2 ALTERNATE #2 WASTE ENCLOSURE PLAN
SCALE: 1/4"=1'-0"

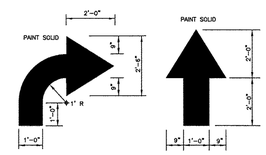

DIRECTIONAL ARROW DETAILS
NOT TO SCALE

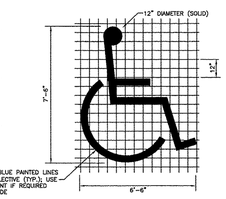

HANDICAP SYMBOL DETAIL
NOT TO SCALE

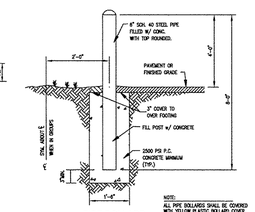

PIPE BOLLARD
N.T.S.

DRIVE THRU

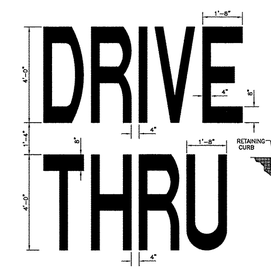

DRIVE-THRU GRAPHICS DETAIL
NOT TO SCALE

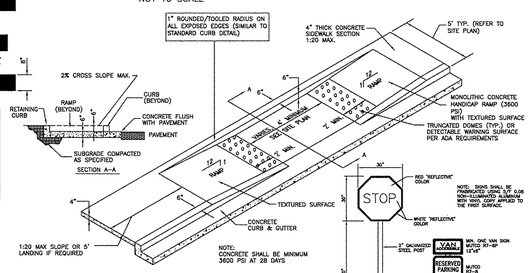

SIDEWALK HANDICAP RAMP DETAIL
NOT TO SCALE

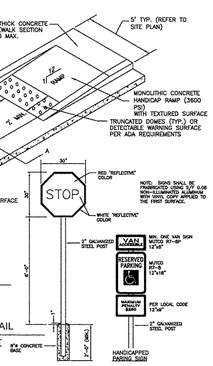

SIGNAGE DETAIL
NOT TO SCALE

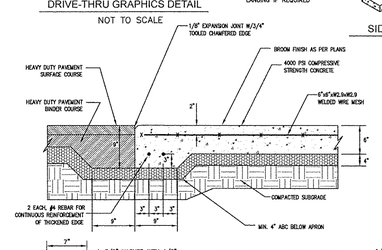

HEAVY DUTY ASPHALT & CONCRETE TRANSITION AT DUMPSTER PAD
N.T.S.

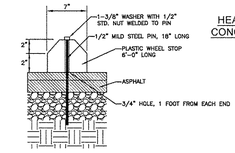

PLASTIC WHEEL STOP DETAIL
NOT TO SCALE

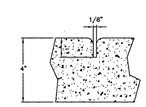

GROOVE JOINT IN SIDEWALK

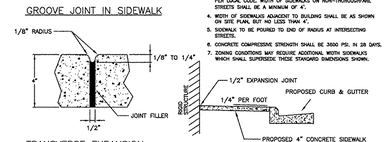

TRANSVERSE EXPANSION JOINT IN SIDEWALK

DETAILS SHOWING EXPANSION JOINTS IN CONCRETE SIDEWALK

CONCRETE SIDEWALK (NOT IN RIGHT OF WAY)
NOT TO SCALE

THE ARCHITECT/ENGINEER DOES NOT DEFINE THE SCOPE OF INDIVIDUAL TRADES, SUBCONTRACTORS, MATERIAL SUPPLIERS, OR VENDORS. ANY SHEET NUMBERING SYSTEM USED WHICH IDENTIFIES DISCIPLINES IS SOLELY TO SEPARATE ARCHITECTS AND ENGINEER'S SCOPE; IT DOES NOT DEFINE A SUBCONTRACTOR'S SCOPE OF WORK. NO CONSIDERATION WILL BE GIVEN TO REQUESTS FOR CHANGE ORDERS FOR FAILURE TO OBTAIN AND REVIEW THE COMPLETE SET OF DRAWINGS AND SPECIFICATIONS.

PLAN NOTES:

1. ALL STEEL TO BE WELDED AND GROUND SMOOTH.
2. GATES AND ALL STEEL COMPONENTS ARE TO BE PRIMED AND PAINTED TO MATCH BRONZE COLORED MASONRY COPING CAP
3. STANDARD SIZE 6" STEEL PIPE IS 6.325" O.D. THICKNESS OF 0.28"
4. STANDARD SIZE 5" STEEL PIPE IS 5.563" O.D. THICKNESS OF 0.258"

ESD architecture • interior design
1300 South Mint Street, Suite 300, Charlotte, NC 28203
Email: esd@esdarch.com • Fax: 704-373-0902 • Phone: 704-373-1900

FAMOUS Bojangles' chicken 'n biscuits

BOJANGLES' RESTAURANTS, INC.
PROTOTYPE PLAN 8

ISSUE DATE: 10-20-10
REVISION 1: -- 5-08-14
REVISION 2: --
REVISION 3: --
REVISION 4: --

PROJECT #: --
CONTENT: SITE DETAILS

PROJECT ARCHITECT: ECE
DRAWN BY: CEG
CADD FILE NAME: P:\10-000\CD\AS01-1 SITE DETAILS

THIS DRAWING AND THE DESIGN SHOWN ARE THE PROPERTY OF BOJANGLES' RESTAURANTS, INC. THE REPRODUCTION, OR USE OF THIS DRAWING WITHOUT THEIR WRITTEN CONSENT IS PROHIBITED, ANY INFRINGEMENT IS SUBJECT TO LEGAL ACTION.

Sheet
AS-1.1

SHEET 1 of 1

P:\CLIENT FILES\Bojangles'\B0-8.0\CD's_AS01-1 SITE DETAILS.dwg, Plotted By: cgreen, Plotted: Oct 25, 2010 - 4:17pm

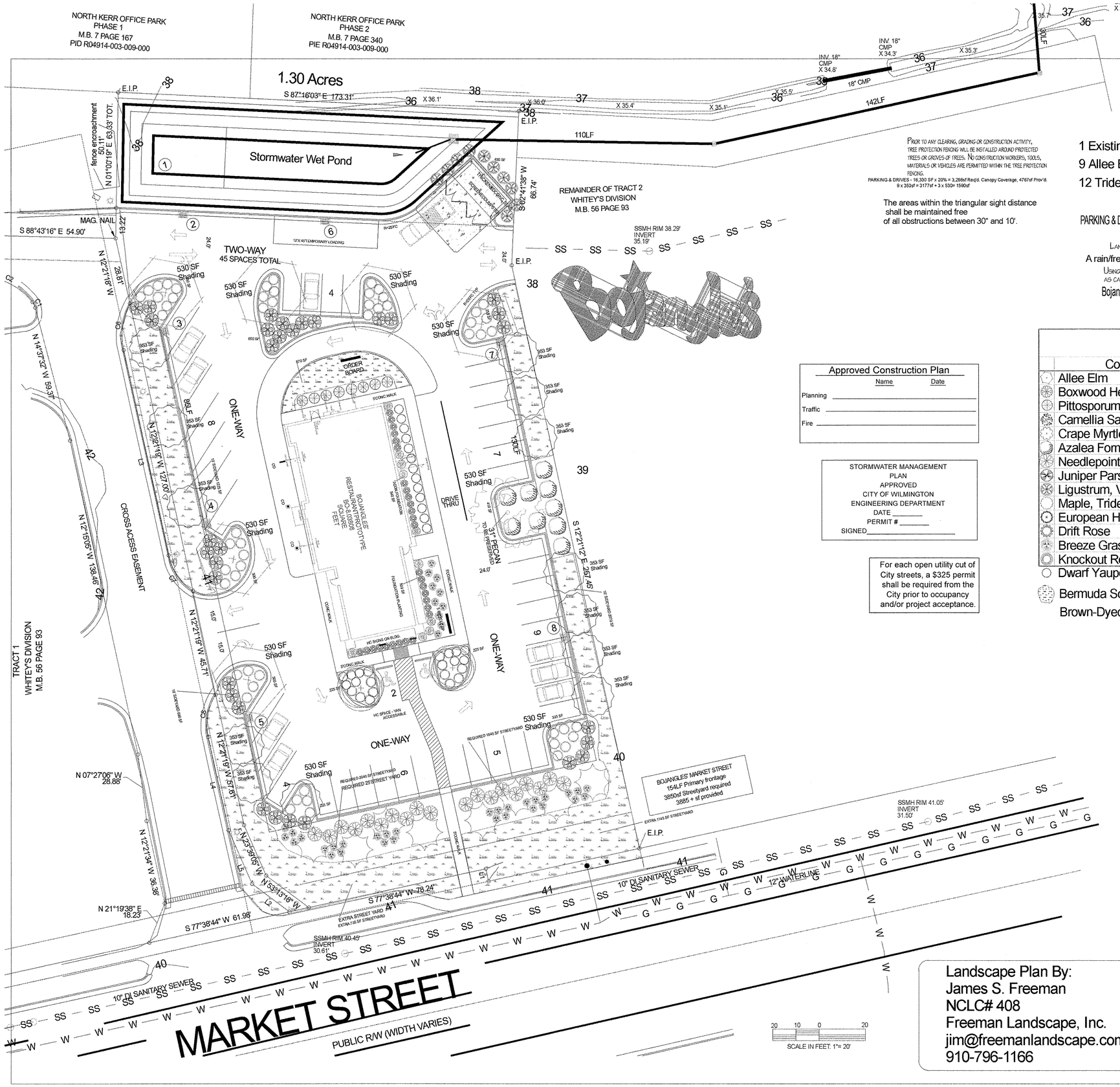

PRIOR TO ANY CLEARING, GRADING OR CONSTRUCTION ACTIVITY, TREE PROTECTION FENCING WILL BE INSTALLED AROUND PROTECTED TREES OR GROVES OF TREES. NO CONSTRUCTION WORKERS, TOOLS, MATERIALS OR VEHICLES ARE PERMITTED WITHIN THE TREE PROTECTION FENCING.

PARKING & DRIVES - 16,330 SF x 20% = 3,266sf Req'd. Canopy Coverage, 4767sf Prov'd.
9 x 353sf = 3177sf + 3 x 530= 1590sf

The areas within the triangular sight distance shall be maintained free of all obstructions between 30" and 10'.

All planted and retained living material required to meet the provisions of the City of Wilmington Land Development Code, shall be perpetually protected and maintained to professionally accepted standards by joint and several responsibility of the owner, tenant and respective agents of the property on which the material is located.

1 Existing Pecan 530sf shading
9 Allee Elm x 530sf = 4770sf shading
12 Trident Maple x 353sf = 4236sf shading

PARKING & DRIVES - 28,000 SF x 20% = 5,600sf Req'd. Canopy Coverage,9,536sf Prov'd.

LANDSCAPING SHALL BE COMPLETE BEFORE ISSUANCE OF A C.O.

A rain/freeze sensor shall be used if there is an irrigation system.

USING THE CREATIVE STANDARD OF THE CODE 50% OF THE STREETYARDS SHALL BE PLANTED AS CALLED OUT.

Bojangles' = 1.3 ACRES x 15 = 20 Trees 2" Cal. Req'd. and 20 Trees 2" Cal. + Prov'd.

N.C. GRID NAD 1983

LOCATION MAP
(NOT TO SCALE)

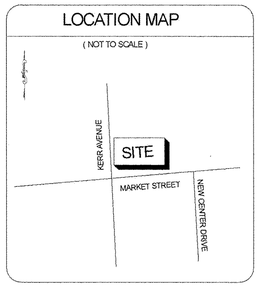

Approved Construction Plan

	Name	Date
Planning		
Traffic		
Fire		

STORMWATER MANAGEMENT
PLAN
APPROVED
CITY OF WILMINGTON
ENGINEERING DEPARTMENT
DATE _____
PERMIT # _____
SIGNED_____

For each open utility cut of City streets, a $325 permit shall be required from the City prior to occupancy and/or project acceptance.

Legend

Common Name	Size	Qty	
Allee Elm	2.5"Cal.,10'ht.	6	
Boxwood Hedge, Wintergreen	3 Gal.	29	12"Ht.
Pittosporum Compacta	3 Gal.	8	12"Ht.
Camellia Sasanqua Yuletide	3 Gal.	10	12"Ht.
Crape Myrtle Tuscarora	2.5"Cal.,8'Ht.	2	
Azalea Formosa	3 Gal.	9	18"Ht.
Needlepoint Holly	7 Gal.	11	36"Ht.
Juniper Parsoni	3 Gal.	54	12"Ht.
Ligustrum, Variegated	3 Gal.	10	27"Ht.
Maple, Trident	3"Cal.,10'ht.	12	
European Hornbeam	3"Cal.,10'ht.	8	
Drift Rose	3 Gal.	12	Groundcover
Breeze Grass	3 Gal.	40	12"Ht.
Knockout Rose, Dbl. Red	3 Gal.	28	18"Ht.
Dwarf Yaupon Holly	3 Gal.	23	12"Ht.
Bermuda Sod	SY	1008	
Brown-Dyed Mulch	CY		

LEGEND

WV = WATER VALVE
WM = WATER METER
CIO = SANITARY SEWER CLEAN OUT
INV. = INVERT
BFP = BACK FLOW PREVENTOR
GW = GUY WIRE
SWMH = STORM MANHOLE
GT. = GREASE TRAP
FH = FIRE HYDRANT
I.S. = IRON SET
= SANITARY SEWER MANHOLE
= CURB INLET
= TREE
= STREET LIGHT
= WATER SERVICE
= SEWER CLEANOUT
= WATER VALVE
PROPERTY LINE
BUILDING SETBACK
CENTERLINE
EASEMENT
COMPUTED PROPERTY LINE
18" PALM — INDICATES TREE TO BE REMOVED

Parking: "Restaurant"
3000 sf exclusive of kitchen and restroom
46 spaces maximum @ 1/65sf
38 spaces minimum @ 1/80sf
43 regular spaces provided
2 van accessible HC spaces provided
No loading space required - one provided
5 bicycle spaces required - 5 provided

NOTE: NO WETLANDS ON THIS SITE.
CAMA LAND USE CLASSIFICATION: "DEVELOPED"
SITE NOT IN A SHOD OR COD.
APPROXIMATE TIME TO COMPLETION: UNDER 1 YEAR.

PAVEMENT MARKING
ARROWS MUST BE AT LEAST
1/2 SIZE STANDARD ROADWAY
ARROWS AS PER CITY TECH.STDS.

TRAFFIC CONTROL SIGNS
AND PAVEMENT MARKINGS
AS PER CITY and NCDOT STANDARDS.

ONE SIGNIFICANT TREE ON SITE TO BE PRESERVED. REGULATED TREES TO BE REMOVED ARE FOR ESSENTIAL SITE IMPROVEMENTS. NO REGULATED TREES ARE LOCATED IN EXCESS PARKING AREAS.

NOTE: DETAILED LANDSCAPING PLAN TO CITY STANDARDS BY OTHERS.

Date Drawn: 3-4-14
Revision #1
Revision# 2
Revision#3

Scale:
1" = 20'
0' 10' 20' 30'

Landscape Plan By:
James S. Freeman
NCLC# 408
Freeman Landscape, Inc.
jim@freemanlandscape.com
910-796-1166

DEVELOPER:
Market & Kerr, LLC
3013-A Hall Watters Dr.
Wilmington, NC 28405
910-399-6839
DEVELOPER: BOJANGLES' RESTAURANTS INC.
9432 SOUTHERN PINE BLVD.
CHARLOTTE, NC 28273 phone:704-940-8669

BOJANGLES'
Market Street

MEMORANDUM

TO: Jeff Walton, Project Manager, City of Wilmington

FROM: David S. Hollis, PE, PLS, Hanover Design Services

RE: Bojangles Market Street – Wilmington
Response to Preliminary Plan staff review comments and concerns

DATE: May 8, 2014

COPY: Claude Clark, Director of Engineering and Construction, Bojangles

In response to review comments finished May 7 for "Site Plan Version 1 at Bojangles Market Street" (20140190733), I would like to submit the attached revised drawings, and address the individual comments, as follows:

Wilmington Fire Department (6224) –

- Existing fire hydrant location as shown adequate.

Transportation Planning (6230) –

- The site inventory plan is correct. I have previously submitted 3 copies of the 3 party NCDOT encroachment agreements for City signatures for the sidewalk, and am waiting on those prior to submitting to DOT. CFPUA has already signed their utilities encroachments.
- My understanding is that the TIA prepared previously has been amended and re-approved by DOT and others.
- The striping in Market Street and adjacent existing driveways were shown. As requested I added the temporary median barrier and the double yellow in the common driveway. I don't really see any reason to show drives on the other side of Market as there is no way they could impact this site. DOT has approved the driveway and TIA already.
- I added the requested sight triangles at the two access points to our site from the common easement. The drives are correct in width and spot proposed elevations were shown correctly as indicated on Sheet 2.
- I clarified new proposed sidewalk with a note, existing is shown on site inventory map.
- I revised the wheel stop detail to indicate 4" in height rather than 5" as directed.
- I revised notes 11, 14, and 15 as directed, and added a note about reflectors.

Planning (6250) –

- I am scanning the revised set at a higher resolution to make them easier to read as several reviewers mentioned; this may necessitate emailing in several packets.
- We submitted a tree removal application and fee last time, and I trust everything is in order for this permit to be issued.
- On the landscaping plan, I just had the pdf copy from Freeman, but I copied it to CAD and added City approval stamps as requested.

Environmental Planning (6251) –

1. I changed the CAMA classification to "urban" as requested.
2. LID is not feasible on this site but we are complying with all applicable environmental and stormwater regulations, to the best of my knowledge.
3. Detailed soils inventories and drainage patterns etc were previously submitted to City and County Engineering Departments in the calculations booklets.
4. As per an email from the developer:
    - Bojangles' irrigation systems do have moisture/rain sensors incorporated, and Bojangles' uses low flow plumbing systems.
    - Pervious pavement is not practical on this site because of underlying soils infiltration capacities and seasonal high water table depth.

Engineering (6309) –

1. I changed the 900 sf allocation to "future" on the plans to agree with the application. We have no intention of using it at this time as per the plans submitted.
2. As above, I will scan the plans at a higher resolution to facilitate easier review.
3. The DA map was configured to the best of my knowledge, but all the inlet areas are all very small and the pipe sizes of 18" have capacity either way – all the stormwater ends up in the same place. Because of slope configuration, no spreads will impact traffic aisles.
4. That 5 sf was just a round-up I believe. Use the data table/application number please.
5. I raised the emergency spillway 0.2' as directed and re-ran all the numbers in an "additional calculations" attachment.
6. I added a detail of the emergency spillway as requested.
7. I added all the requested pertinent hydrograph information to the calculations, see number 5 above.
8. The owner, Brian Prevatte, is preparing the requested easement plat. I would suggest that you add recordation of this plat and existing ditch cleanout requirements to your conditions of approval, for completion prior to CO.

9. I added the requested notes to the plan as directed.
10. I went back and reviewed 6.4.1 and 6.4.2 as you indicated and a lot of that is for artificial wetlands BMPs, although it includes wet ponds also. The "aquatic vegetation" specs on sheet 3 comply with the regulations, but I also added a note referencing these BMP chapters.
11. I added a note for the 5' perimeter landscaping zone around the outside wall, but we also have the 5' landscaping shelf above the waterline. Added notes indicating access for maintenance is to be along the parking drive aisle.
12. Much of SD-15-16 doesn't really apply to this BMP, in my opinion, and trees would be impractical because of area and access constraints. I added a note that landscaping around the perimeter was required, with shrubs and mulch as per the detail.

Miscellaneous other review comments (CFPUA) –

- I revised the water service/irrigation split as per their detail.
- Added some notes at the service connection points as they directed.
- CFPUA has approved the plans "as noted" and have signed the encroachment agreements for submittal to NCDOT.

Miscellaneous other review comments (New Hanover County Engineering) –

- NHC also wants the recorded easement plat as per Engineering numbers 8 and 9 above.
- Added basin surface area calculations to the plan.
- Added details to dewater the basin from the top during sedimentation phase, before the contributing drainage area is stabilized.
- Added outlet pipe velocity calcs to the plan. Outlet protection was previously shown.
- They need tree approval from the City before releasing the permit.

Please let me know if I have misunderstood or missed any of the comments. I really would like to get the City's signatures on the DOT encroachments so we could submit to DOT, that being a fairly time consuming endeavor. Thanks.

Additional Stormwater Management Computations

for

Bojangles' Market Street

PREPARED FOR

Bojangles' Restaurants Inc.
9432 Southern Pine Blvd.
Charlotte, NC 28273-5553
704-940-8669

NORTH CAROLINA PROFESSIONAL SEAL 20007 ENGINEER DAVID S. HOLLIS

David S. Hollis, PE, PLS
5.08.14

Hanover Design Services, PA
1123 Floral Parkway
Wilmington, NC 28403
HDS License C-0597

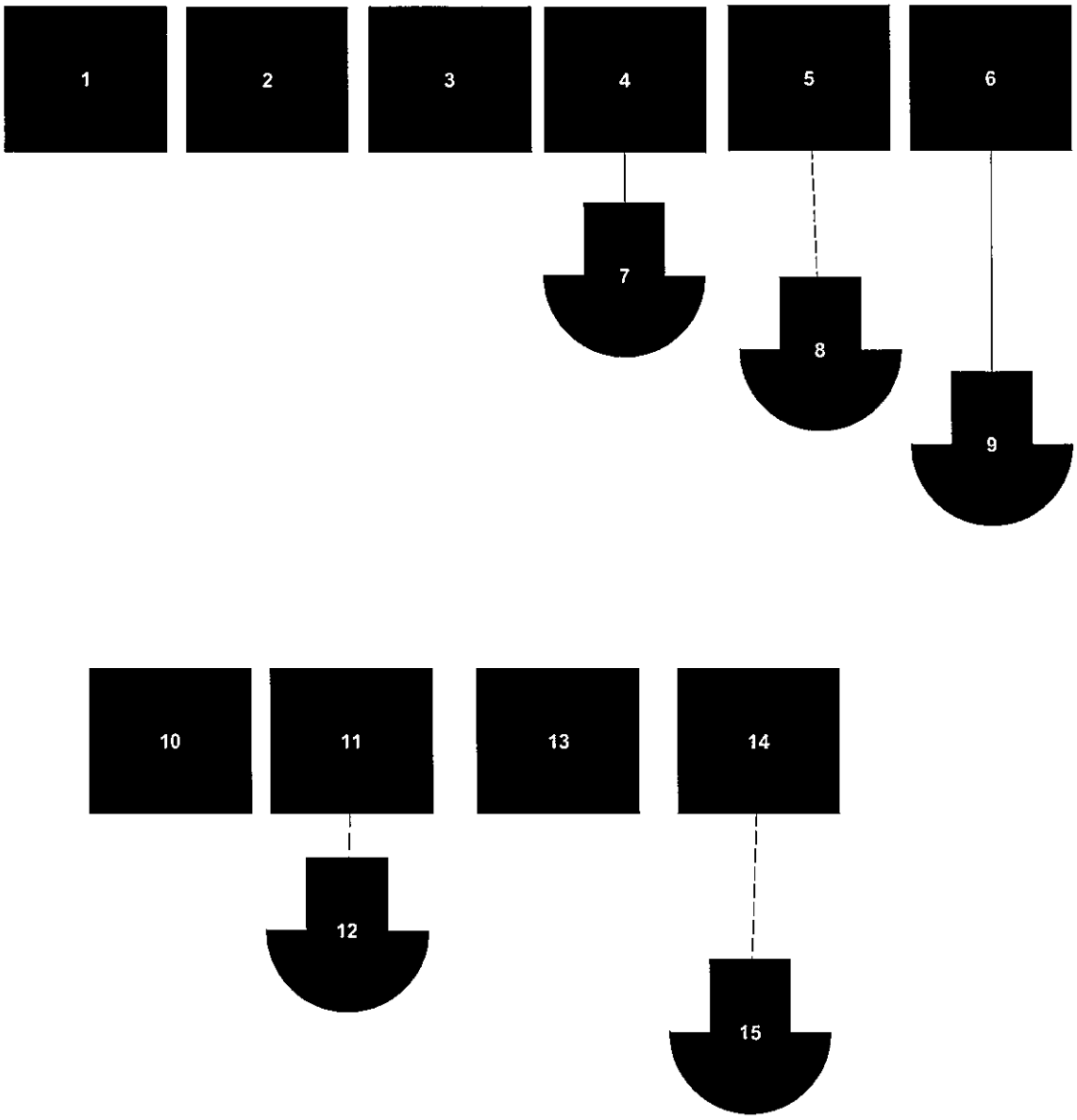

Hanover Design Services
1123 Floral Pkwy.
Wilmington, NC 28403

Project: 12820-scs.GPW	IDF: newhanover.IDF	15 hyd's	05-08-2014

Hydrograph Summary Report

Hyd. No.	Hydrograph type (origin)	Peak flow (cfs)	Time interval (min)	Time to peak (min)	Volume (cuft)	Return period (yrs)	Inflow hyd(s)	Maximum elevation (ft)	Maximum storage (cuft)	Hydrograph description
1	SCS Runoff	2.04	6	750	16,093	10	----	------	------	10yr Predev-24hr
2	SCS Runoff	3.59	6	750	28,134	50	----	------	------	50yr Predev
3	SCS Runoff	4.66	6	750	36,609	100	----	------	------	100yr Predev
4	SCS Runoff	3.34	6	738	21,246	10	----	------	------	10yr Postdev-24hr
5	SCS Runoff	5.41	6	738	34,726	50	----	------	------	50yr Postdev
6	SCS Runoff	6.79	6	738	43,972	100	----	------	------	100yr Postdev
7	Reservoir	1.58	6	774	18,438	10	4	37.46	10,237	10yr Post-Route-24
8	Reservoir	4.58	6	756	31,908	50	5	37.80	12,259	50yr Post-Route
9	Reservoir	5.09	6	756	41,150	100	6	38.11	14,135	100yr Post-Route
10	Rational	1.02	1	20	1,229	2	----	------	------	1-year Rational pr
11	Rational	4.89	1	15	4,401	2	----	------	------	1-year post
12	Reservoir	0.01	1	30	812	2	11	36.44	4,393	1-year routed
13	SCS Runoff	2.80	6	750	21,984	25	----	------	------	25-YR PRE
14	SCS Runoff	4.37	6	738	27,909	25	----	------	------	25-YR POST
15	Reservoir	2.81	6	762	25,096	25	14	37.68	11,557	25-YR ROUTED

Hanover Design Services
1123 Floral Pkwy.
Wilmington, NC 28403

Reservoir Report

English

Reservoir No. 1 - Bojangles SCS

Pond Data

Pond storage is based on known contour areas

Stage / Storage Table

Stage ft	Elevation ft	Contour area sqft	Incr. Storage cuft	Total storage cuft
0.00	35.50	3,200	0	0
0.50	36.00	4,880	2,020	2,020
1.50	37.00	6,000	5,440	7,460
2.50	38.00	6,000	6,000	13,460
3.50	39.00	6,000	6,000	19,460
4.50	40.00	6,000	6,000	25,460

Culvert / Orifice Structures

	[A]	[B]	[C]	[D]
Rise in	= 15.0	1.0	0.0	0.0
Span in	= 15.0	1.0	0.0	0.0
No. Barrels	= 1	1	0	0
Invert El. ft	= 35.50	35.50	0.00	0.00
Length ft	= 282.0	10.0	0.0	0.0
Slope %	= 0.10	0.01	0.00	0.00
N-Value	= .011	.011	.000	.000
Orif. Coeff.	= 0.60	0.60	0.00	0.00
Multi-Stage	= -----	Yes	No	No

Weir Structures

	[A]	[B]	[C]	[D]
Crest Len ft	= 1.5	16.0	20.0	0.0
Crest El. ft	= 37.00	37.70	38.20	0.00
Weir Coeff.	= 3.30	3.30	3.00	0.00
Eqn. Exp.	= 1.50	1.50	1.50	0.00
Multi-Stage	= Yes	Yes	No	No

Tailwater Elevation = 36.00 ft

Note: All outflows have been analyzed under inlet and outlet control.

Stage / Storage / Discharge Table

Stage ft	Storage cuft	Elevation ft	Clv A cfs	Clv B cfs	Clv C cfs	Clv D cfs	Wr A cfs	Wr B cfs	Wr C cfs	Wr D cfs	Discharge cfs
0.00	0	35.50	0.00	0.00	---	---	0.00	0.00	0.00	---	0.00
0.50	2,020	36.00	0.00	0.00	---	---	0.00	0.00	0.00	---	0.00
1.50	7,460	37.00	2.90	0.02	---	---	0.00	0.00	0.00	---	0.02
2.50	13,460	38.00	4.92	0.00	---	---	4.95	8.68	0.00	---	4.92
3.50	19,460	39.00	6.32	0.00	---	---	14.00	78.26	42.93	---	49.25
4.50	25,460	40.00	7.46	0.00	---	---	25.72	184.17	144.90	---	152.36

Hydrograph Report

English

Hyd. No. 1

10yr Predev-24hr

Hydrograph type	= SCS Runoff	Peak discharge	= 2.04 cfs
Storm frequency	= 10 yrs	Time interval	= 6 min
Drainage area	= 1.30 ac	Curve number	= 68
Basin Slope	= 0.5 %	Hydraulic length	= 350 ft
Tc method	= USER	Time of conc. (Tc)	= 20 min
Total precip.	= 7.00 in	Distribution	= Type III
Storm duration	= 24 hrs	Shape factor	= 242

Total Volume = 16,093 cuft

Hydrograph Discharge Table

Time -- Outflow (hrs cfs)		Time -- Outflow (hrs cfs)		Time -- Outflow (hrs cfs)		Time -- Outflow (hrs cfs)	
9.80	0.02	13.00	1.49	16.20	0.22	19.40	0.11
9.90	0.03	13.10	1.33	16.30	0.21	19.50	0.11
10.00	0.03	13.20	1.17	16.40	0.20	19.60	0.11
10.10	0.04	13.30	1.01	16.50	0.20	19.70	0.10
10.20	0.04	13.40	0.86	16.60	0.19	19.80	0.10
10.30	0.05	13.50	0.72	16.70	0.19	19.90	0.10
10.40	0.06	13.60	0.61	16.80	0.18	20.00	0.10
10.50	0.06	13.70	0.55	16.90	0.18	20.10	0.10
10.60	0.07	13.80	0.50	17.00	0.17	20.20	0.10
10.70	0.08	13.90	0.46	17.10	0.17	20.30	0.10
10.80	0.09	14.00	0.44	17.20	0.16	20.40	0.10
10.90	0.10	14.10	0.42	17.30	0.16	20.50	0.10
11.00	0.11	14.20	0.40	17.40	0.16	20.60	0.09
11.10	0.12	14.30	0.38	17.50	0.15	20.70	0.09
11.20	0.14	14.40	0.37	17.60	0.15	20.80	0.09
11.30	0.15	14.50	0.36	17.70	0.15	20.90	0.09
11.40	0.17	14.60	0.35	17.80	0.14	21.00	0.09
11.50	0.20	14.70	0.34	17.90	0.14	21.10	0.09
11.60	0.23	14.80	0.33	18.00	0.14	21.20	0.09
11.70	0.28	14.90	0.32	18.10	0.13	21.30	0.09
11.80	0.38	15.00	0.31	18.20	0.13	21.40	0.09
11.90	0.52	15.10	0.30	18.30	0.13	21.50	0.09
12.00	0.80	15.20	0.29	18.40	0.12	21.60	0.08
12.10	1.20	15.30	0.29	18.50	0.12	21.70	0.08
12.20	1.61	15.40	0.28	18.60	0.12	21.80	0.08
12.30	1.90	15.50	0.27	18.70	0.12	21.90	0.08
12.40	2.01	15.60	0.26	18.80	0.12	22.00	0.08
12.50	2.04 <<	15.70	0.25	18.90	0.11	22.10	0.08
12.60	1.99	15.80	0.25	19.00	0.11	22.20	0.08
12.70	1.89	15.90	0.24	19.10	0.11	22.30	0.09
12.80	1.77	16.00	0.23	19.20	0.11	22.40	0.08
12.90	1.63	16.10	0.22	19.30	0.11	22.50	0.08

Continues on next page...

Hydrograph Report

English

Hyd. No. 2

50yr Predev

Hydrograph type	= SCS Runoff	Peak discharge	= 3.59 cfs
Storm frequency	= 50 yrs	Time interval	= 6 min
Drainage area	= 1.30 ac	Curve number	= 68
Basin Slope	= 0.5 %	Hydraulic length	= 350 ft
Tc method	= USER	Time of conc. (Tc)	= 20 min
Total precip.	= 10.00 in	Distribution	= Type III
Storm duration	= 24 hrs	Shape factor	= 242

Total Volume = 28,134 cuft

Hydrograph Discharge Table

Time (hrs)	Outflow (cfs)	Time (hrs)	Outflow (cfs)	Time (hrs)	Outflow (cfs)	Time (hrs)	Outflow (cfs)
8.80	0.04	12.00	1.55	15.20	0.47	18.40	0.20
8.90	0.05	12.10	2.25	15.30	0.45	18.50	0.19
9.00	0.05	12.20	2.95	15.40	0.44	18.60	0.19
9.10	0.06	12.30	3.41	15.50	0.43	18.70	0.18
9.20	0.07	12.40	3.57	15.60	0.42	18.80	0.18
9.30	0.07	12.50	3.59 <<	15.70	0.40	18.90	0.18
9.40	0.08	12.60	3.48	15.80	0.39	19.00	0.18
9.50	0.09	12.70	3.29	15.90	0.38	19.10	0.17
9.60	0.10	12.80	3.06	16.00	0.37	19.20	0.17
9.70	0.11	12.90	2.80	16.10	0.35	19.30	0.17
9.80	0.11	13.00	2.54	16.20	0.34	19.40	0.17
9.90	0.12	13.10	2.26	16.30	0.33	19.50	0.17
10.00	0.13	13.20	1.97	16.40	0.32	19.60	0.17
10.10	0.14	13.30	1.69	16.50	0.31	19.70	0.16
10.20	0.16	13.40	1.42	16.60	0.30	19.80	0.16
10.30	0.17	13.50	1.18	16.70	0.29	19.90	0.16
10.40	0.18	13.60	1.00	16.80	0.29	20.00	0.16
10.50	0.20	13.70	0.89	16.90	0.28	20.10	0.16
10.60	0.21	13.80	0.80	17.00	0.27	20.20	0.16
10.70	0.23	13.90	0.75	17.10	0.27	20.30	0.15
10.80	0.25	14.00	0.71	17.20	0.26	20.40	0.15
10.90	0.26	14.10	0.67	17.30	0.25	20.50	0.15
11.00	0.28	14.20	0.64	17.40	0.25	20.60	0.15
11.10	0.31	14.30	0.62	17.50	0.24	20.70	0.15
11.20	0.33	14.40	0.60	17.60	0.24	20.80	0.15
11.30	0.36	14.50	0.58	17.70	0.23	20.90	0.14
11.40	0.40	14.60	0.56	17.80	0.23	21.00	0.14
11.50	0.45	14.70	0.54	17.90	0.22	21.10	0.14
11.60	0.51	14.80	0.52	18.00	0.22	21.20	0.14
11.70	0.61	14.90	0.51	18.10	0.21	21.30	0.14
11.80	0.79	15.00	0.49	18.20	0.20	21.40	0.14
11.90	1.06	15.10	0.48	18.30	0.20	21.50	0.13

Continues on next page...

Hydrograph Report

English

Hyd. No. 3

100yr Predev

Hydrograph type	= SCS Runoff	Peak discharge	= 4.66 cfs
Storm frequency	= 100 yrs	Time interval	= 6 min
Drainage area	= 1.30 ac	Curve number	= 68
Basin Slope	= 0.5 %	Hydraulic length	= 350 ft
Tc method	= USER	Time of conc. (Tc)	= 20 min
Total precip.	= 12.00 in	Distribution	= Type III
Storm duration	= 24 hrs	Shape factor	= 242

Total Volume = 36,609 cuft

Hydrograph Discharge Table

Time -- Outflow (hrs cfs)		Time -- Outflow (hrs cfs)		Time -- Outflow (hrs cfs)		Time -- Outflow (hrs cfs)	
8.20	0.05	11.40	0.57	14.60	0.70	17.80	0.28
8.30	0.05	11.50	0.63	14.70	0.68	17.90	0.27
8.40	0.06	11.60	0.72	14.80	0.66	18.00	0.27
8.50	0.06	11.70	0.86	14.90	0.64	18.10	0.26
8.60	0.07	11.80	1.09	15.00	0.62	18.20	0.25
8.70	0.08	11.90	1.45	15.10	0.60	18.30	0.25
8.80	0.09	12.00	2.09	15.20	0.58	18.40	0.24
8.90	0.09	12.10	2.99	15.30	0.57	18.50	0.24
9.00	0.10	12.20	3.88	15.40	0.55	18.60	0.23
9.10	0.11	12.30	4.47	15.50	0.54	18.70	0.23
9.20	0.12	12.40	4.65	15.60	0.52	18.80	0.23
9.30	0.13	12.50	4.66 <<	15.70	0.50	18.90	0.22
9.40	0.14	12.60	4.50	15.80	0.49	19.00	0.22
9.50	0.15	12.70	4.25	15.90	0.47	19.10	0.22
9.60	0.17	12.80	3.94	16.00	0.46	19.20	0.21
9.70	0.18	12.90	3.60	16.10	0.44	19.30	0.21
9.80	0.19	13.00	3.25	16.20	0.43	19.40	0.21
9.90	0.20	13.10	2.89	16.30	0.41	19.50	0.21
10.00	0.22	13.20	2.51	16.40	0.40	19.60	0.21
10.10	0.23	13.30	2.15	16.50	0.39	19.70	0.20
10.20	0.25	13.40	1.80	16.60	0.38	19.80	0.20
10.30	0.26	13.50	1.49	16.70	0.37	19.90	0.20
10.40	0.28	13.60	1.26	16.80	0.36	20.00	0.20
10.50	0.30	13.70	1.11	16.90	0.35	20.10	0.20
10.60	0.32	13.80	1.01	17.00	0.34	20.20	0.19
10.70	0.34	13.90	0.94	17.10	0.33	20.30	0.19
10.80	0.37	14.00	0.89	17.20	0.32	20.40	0.19
10.90	0.39	14.10	0.84	17.30	0.32	20.50	0.19
11.00	0.42	14.20	0.81	17.40	0.31	20.60	0.18
11.10	0.45	14.30	0.77	17.50	0.30	20.70	0.18
11.20	0.48	14.40	0.75	17.60	0.30	20.80	0.18
11.30	0.52	14.50	0.72	17.70	0.29	20.90	0.18

Continues on next page...

Hydrograph Report

English

Hyd. No. 4

10yr Postdev-24hr

Hydrograph type	= SCS Runoff	Peak discharge	= 3.34 cfs
Storm frequency	= 10 yrs	Time interval	= 6 min
Drainage area	= 1.30 ac	Curve number	= 77
Basin Slope	= 0.5 %	Hydraulic length	= 350 ft
Tc method	= USER	Time of conc. (Tc)	= 15 min
Total precip.	= 7.00 in	Distribution	= Type III
Storm duration	= 24 hrs	Shape factor	= 242

Total Volume = 21,246 cuft

Hydrograph Discharge Table

Time (hrs)	Outflow (cfs)	Time (hrs)	Outflow (cfs)	Time (hrs)	Outflow (cfs)	Time (hrs)	Outflow (cfs)
8.50	0.04	11.70	0.62	14.90	0.35	18.10	0.15
8.60	0.04	11.80	0.85	15.00	0.34	18.20	0.14
8.70	0.04	11.90	1.17	15.10	0.34	18.30	0.14
8.80	0.05	12.00	1.79	15.20	0.33	18.40	0.14
8.90	0.05	12.10	2.67	15.30	0.32	18.50	0.13
9.00	0.06	12.20	3.22	15.40	0.31	18.60	0.13
9.10	0.07	12.30	3.34 <<	15.50	0.30	18.70	0.13
9.20	0.07	12.40	3.29	15.60	0.29	18.80	0.13
9.30	0.08	12.50	3.07	15.70	0.28	18.90	0.13
9.40	0.08	12.60	2.74	15.80	0.27	19.00	0.13
9.50	0.09	12.70	2.35	15.90	0.26	19.10	0.13
9.60	0.10	12.80	1.96	16.00	0.25	19.20	0.12
9.70	0.11	12.90	1.58	16.10	0.24	19.30	0.12
9.80	0.11	13.00	1.23	16.20	0.23	19.40	0.12
9.90	0.12	13.10	0.97	16.30	0.23	19.50	0.12
10.00	0.13	13.20	0.81	16.40	0.22	19.60	0.12
10.10	0.14	13.30	0.71	16.50	0.21	19.70	0.12
10.20	0.15	13.40	0.64	16.60	0.21	19.80	0.12
10.30	0.16	13.50	0.59	16.70	0.20	19.90	0.12
10.40	0.17	13.60	0.56	16.80	0.20	20.00	0.11
10.50	0.18	13.70	0.54	16.90	0.20	20.10	0.11
10.60	0.20	13.80	0.51	17.00	0.19	20.20	0.11
10.70	0.21	13.90	0.49	17.10	0.19	20.30	0.11
10.80	0.23	14.00	0.47	17.20	0.18	20.40	0.11
10.90	0.24	14.10	0.45	17.30	0.18	20.50	0.11
11.00	0.26	14.20	0.44	17.40	0.17	20.60	0.11
11.10	0.28	14.30	0.42	17.50	0.17	20.70	0.11
11.20	0.30	14.40	0.41	17.60	0.17	20.80	0.10
11.30	0.34	14.50	0.40	17.70	0.16	20.90	0.10
11.40	0.37	14.60	0.38	17.80	0.16	21.00	0.10
11.50	0.42	14.70	0.37	17.90	0.15	21.10	0.10
11.60	0.49	14.80	0.36	18.00	0.15	21.20	0.10

Continues on next page...

Hydrograph Report

English

Hyd. No. 5

50yr Postdev

Hydrograph type	= SCS Runoff	Peak discharge	= 5.41 cfs
Storm frequency	= 50 yrs	Time interval	= 6 min
Drainage area	= 1.30 ac	Curve number	= 77
Basin Slope	= 1.0 %	Hydraulic length	= 350 ft
Tc method	= USER	Time of conc. (Tc)	= 15 min
Total precip.	= 10.00 in	Distribution	= Type III
Storm duration	= 24 hrs	Shape factor	= 242

Total Volume = 34,726 cuft

Hydrograph Discharge Table

Time (hrs)	Outflow (cfs)	Time (hrs)	Outflow (cfs)	Time (hrs)	Outflow (cfs)	Time (hrs)	Outflow (cfs)
7.50	0.06	10.70	0.42	13.90	0.75	17.10	0.28
7.60	0.06	10.80	0.45	14.00	0.72	17.20	0.28
7.70	0.06	10.90	0.48	14.10	0.69	17.30	0.27
7.80	0.07	11.00	0.51	14.20	0.67	17.40	0.26
7.90	0.07	11.10	0.54	14.30	0.64	17.50	0.26
8.00	0.08	11.20	0.58	14.40	0.62	17.60	0.25
8.10	0.08	11.30	0.63	14.50	0.60	17.70	0.24
8.20	0.09	11.40	0.69	14.60	0.58	17.80	0.24
8.30	0.10	11.50	0.77	14.70	0.57	17.90	0.23
8.40	0.10	11.60	0.88	14.80	0.55	18.00	0.23
8.50	0.11	11.70	1.11	14.90	0.54	18.10	0.22
8.60	0.12	11.80	1.49	15.00	0.52	18.20	0.21
8.70	0.13	11.90	2.02	15.10	0.51	18.30	0.21
8.80	0.14	12.00	3.02	15.20	0.49	18.40	0.21
8.90	0.15	12.10	4.42	15.30	0.48	18.50	0.20
9.00	0.16	12.20	5.26	15.40	0.47	18.60	0.20
9.10	0.17	12.30	5.41 <<	15.50	0.45	18.70	0.20
9.20	0.18	12.40	5.28	15.60	0.44	18.80	0.19
9.30	0.19	12.50	4.91	15.70	0.42	18.90	0.19
9.40	0.20	12.60	4.35	15.80	0.41	19.00	0.19
9.50	0.22	12.70	3.71	15.90	0.40	19.10	0.19
9.60	0.23	12.80	3.08	16.00	0.38	19.20	0.19
9.70	0.24	12.90	2.47	16.10	0.37	19.30	0.19
9.80	0.26	13.00	1.91	16.20	0.35	19.40	0.18
9.90	0.27	13.10	1.50	16.30	0.34	19.50	0.18
10.00	0.28	13.20	1.25	16.40	0.33	19.60	0.18
10.10	0.30	13.30	1.08	16.50	0.32	19.70	0.18
10.20	0.31	13.40	0.98	16.60	0.32	19.80	0.18
10.30	0.33	13.50	0.91	16.70	0.31	19.90	0.17
10.40	0.35	13.60	0.86	16.80	0.30	20.00	0.17
10.50	0.37	13.70	0.82	16.90	0.29	20.10	0.17
10.60	0.40	13.80	0.78	17.00	0.29	20.20	0.17

Continues on next page...

Hydrograph Report

English

Hyd. No. 6

100yr Postdev

Hydrograph type	= SCS Runoff	Peak discharge	= 6.79 cfs
Storm frequency	= 100 yrs	Time interval	= 6 min
Drainage area	= 1.30 ac	Curve number	= 77
Basin Slope	= 1.0 %	Hydraulic length	= 350 ft
Tc method	= USER	Time of conc. (Tc)	= 15 min
Total precip.	= 12.00 in	Distribution	= Type III
Storm duration	= 24 hrs	Shape factor	= 242

Total Volume = 43,972 cuft

Hydrograph Discharge Table

Time (hrs)	Outflow (cfs)	Time (hrs)	Outflow (cfs)	Time (hrs)	Outflow (cfs)	Time (hrs)	Outflow (cfs)
7.00	0.07	10.20	0.44	13.40	1.20	16.60	0.39
7.10	0.07	10.30	0.46	13.50	1.12	16.70	0.38
7.20	0.08	10.40	0.49	13.60	1.06	16.80	0.37
7.30	0.08	10.50	0.51	13.70	1.01	16.90	0.36
7.40	0.09	10.60	0.54	13.80	0.96	17.00	0.35
7.50	0.10	10.70	0.58	13.90	0.92	17.10	0.35
7.60	0.10	10.80	0.61	14.00	0.88	17.20	0.34
7.70	0.11	10.90	0.64	14.10	0.85	17.30	0.33
7.80	0.12	11.00	0.68	14.20	0.82	17.40	0.32
7.90	0.12	11.10	0.72	14.30	0.79	17.50	0.31
8.00	0.13	11.20	0.77	14.40	0.76	17.60	0.31
8.10	0.14	11.30	0.84	14.50	0.74	17.70	0.30
8.20	0.14	11.40	0.92	14.60	0.72	17.80	0.29
8.30	0.15	11.50	1.01	14.70	0.69	17.90	0.28
8.40	0.16	11.60	1.16	14.80	0.68	18.00	0.28
8.50	0.17	11.70	1.45	14.90	0.66	18.10	0.27
8.60	0.18	11.80	1.94	15.00	0.64	18.20	0.26
8.70	0.20	11.90	2.61	15.10	0.62	18.30	0.26
8.80	0.21	12.00	3.86	15.20	0.61	18.40	0.25
8.90	0.22	12.10	5.60	15.30	0.59	18.50	0.25
9.00	0.24	12.20	6.63	15.40	0.57	18.60	0.24
9.10	0.25	12.30	6.79 <<	15.50	0.55	18.70	0.24
9.20	0.26	12.40	6.62	15.60	0.54	18.80	0.24
9.30	0.28	12.50	6.14	15.70	0.52	18.90	0.24
9.40	0.30	12.60	5.42	15.80	0.50	19.00	0.23
9.50	0.31	12.70	4.62	15.90	0.48	19.10	0.23
9.60	0.33	12.80	3.83	16.00	0.47	19.20	0.23
9.70	0.34	12.90	3.06	16.10	0.45	19.30	0.23
9.80	0.36	13.00	2.36	16.20	0.43	19.40	0.22
9.90	0.38	13.10	1.85	16.30	0.42	19.50	0.22
10.00	0.40	13.20	1.54	16.40	0.41	19.60	0.22
10.10	0.42	13.30	1.33	16.50	0.40	19.70	0.22

Continues on next page...

Hydrograph Report

English

Hyd. No. 7

10yr Post-Route-24hr

Hydrograph type	= Reservoir	Peak discharge	= 1.58 cfs
Storm frequency	= 10 yrs	Time interval	= 6 min
Inflow hyd. No.	= 4	Reservoir name	= Bojangles SCS
Max. Elevation	= 37.46 ft	Max. Storage	= 10,237 cuft

Storage Indication method used.

Total Volume = 18,438 cuft

Hydrograph Discharge Table

Time (hrs)	Inflow cfs	Elevation ft	Clv A cfs	Clv B cfs	Clv C cfs	Clv D cfs	Wr A cfs	Wr B cfs	Wr C cfs	Wr D cfs	Outflow cfs
12.40	3.29	37.01	2.91	0.02	-----	-----	0.01	-----	-----	-----	0.02
12.50	3.07	37.18	3.36	0.02	-----	-----	0.39	-----	-----	-----	0.41
12.60	2.74	37.32	3.66	0.02	-----	-----	0.89	-----	-----	-----	0.91
12.70	2.35	37.40	3.84	0.02	-----	-----	1.27	-----	-----	-----	1.29
12.80	1.96	37.45	3.93	0.02	-----	-----	1.50	-----	-----	-----	1.52
12.90	1.58	37.46	3.96	0.02	-----	-----	1.56	-----	-----	-----	1.58 <<
13.00	1.23	37.45	3.94	0.02	-----	-----	1.52	-----	-----	-----	1.54
13.10	0.97	37.43	3.90	0.02	-----	-----	1.41	-----	-----	-----	1.42
13.20	0.81	37.40	3.84	0.02	-----	-----	1.27	-----	-----	-----	1.29
13.30	0.71	37.38	3.78	0.02	-----	-----	1.14	-----	-----	-----	1.16
13.40	0.64	37.35	3.73	0.02	-----	-----	1.03	-----	-----	-----	1.05
13.50	0.59	37.33	3.68	0.02	-----	-----	0.93	-----	-----	-----	0.95
13.60	0.56	37.31	3.64	0.02	-----	-----	0.84	-----	-----	-----	0.86
13.70	0.54	37.29	3.60	0.02	-----	-----	0.78	-----	-----	-----	0.79
13.80	0.51	37.28	3.57	0.02	-----	-----	0.72	-----	-----	-----	0.74
13.90	0.49	37.26	3.54	0.02	-----	-----	0.67	-----	-----	-----	0.69
14.00	0.47	37.25	3.51	0.02	-----	-----	0.63	-----	-----	-----	0.65
14.10	0.45	37.24	3.49	0.02	-----	-----	0.60	-----	-----	-----	0.61
14.20	0.44	37.23	3.47	0.02	-----	-----	0.56	-----	-----	-----	0.58
14.30	0.42	37.22	3.45	0.02	-----	-----	0.53	-----	-----	-----	0.55
14.40	0.41	37.22	3.44	0.02	-----	-----	0.50	-----	-----	-----	0.52
14.50	0.40	37.21	3.42	0.02	-----	-----	0.48	-----	-----	-----	0.50
14.60	0.38	37.20	3.41	0.02	-----	-----	0.46	-----	-----	-----	0.48
14.70	0.37	37.20	3.40	0.02	-----	-----	0.44	-----	-----	-----	0.46
14.80	0.36	37.19	3.38	0.02	-----	-----	0.43	-----	-----	-----	0.44
14.90	0.35	37.19	3.37	0.02	-----	-----	0.41	-----	-----	-----	0.43
15.00	0.34	37.19	3.36	0.02	-----	-----	0.40	-----	-----	-----	0.42
15.10	0.34	37.18	3.35	0.02	-----	-----	0.39	-----	-----	-----	0.40
15.20	0.33	37.18	3.34	0.02	-----	-----	0.38	-----	-----	-----	0.39
15.30	0.32	37.17	3.33	0.02	-----	-----	0.36	-----	-----	-----	0.38
15.40	0.31	37.17	3.32	0.02	-----	-----	0.35	-----	-----	-----	0.37
15.50	0.30	37.17	3.31	0.02	-----	-----	0.34	-----	-----	-----	0.36
15.60	0.29	37.16	3.31	0.02	-----	-----	0.33	-----	-----	-----	0.35
15.70	0.28	37.16	3.30	0.02	-----	-----	0.32	-----	-----	-----	0.34
15.80	0.27	37.15	3.29	0.02	-----	-----	0.31	-----	-----	-----	0.33
15.90	0.26	37.15	3.28	0.02	-----	-----	0.30	-----	-----	-----	0.32

Continues on next page...

Hydrograph Report

English

Hyd. No. 8

50yr Post-Route

Hydrograph type	= Reservoir	Peak discharge	= 4.58 cfs
Storm frequency	= 50 yrs	Time interval	= 6 min
Inflow hyd. No.	= 5	Reservoir name	= Bojangles SCS
Max. Elevation	= 37.80 ft	Max. Storage	= 12,259 cuft

Storage Indication method used.

Total Volume = 31,908 cuft

Hydrograph Discharge Table

Time (hrs)	Inflow cfs	Elevation ft	Clv A cfs	Clv B cfs	Clv C cfs	Clv D cfs	Wr A cfs	Wr B cfs	Wr C cfs	Wr D cfs	Outflow cfs
12.10	4.42	37.07	3.09	0.02	-----	-----	0.12	-----	-----	-----	0.13
12.20	5.26	37.33	3.69	0.02	-----	-----	0.95	-----	-----	-----	0.97
12.30	5.41 <<	37.56	4.15	0.02	-----	-----	2.08	-----	-----	-----	2.09
12.40	5.28	37.72	4.44	0.01	-----	-----	3.03	0.33	-----	-----	3.25
12.50	4.91	37.79	4.57	0.01	-----	-----	3.50	1.57	-----	-----	4.48
12.60	4.35	37.80 <<	4.58	0.01	-----	-----	3.54	1.67	-----	-----	4.58 <<
12.70	3.71	37.78	4.55	0.01	-----	-----	3.40	1.30	-----	-----	4.21
12.80	3.08	37.75	4.49	0.01	-----	-----	3.19	0.75	-----	-----	3.67
12.90	2.47	37.71	4.43	0.01	-----	-----	2.96	0.16	-----	-----	3.07
13.00	1.91	37.67	4.35	0.02	-----	-----	2.70	-----	-----	-----	2.72
13.10	1.50	37.62	4.25	0.02	-----	-----	2.39	-----	-----	-----	2.41
13.20	1.25	37.56	4.15	0.02	-----	-----	2.09	-----	-----	-----	2.11
13.30	1.08	37.51	4.06	0.02	-----	-----	1.83	-----	-----	-----	1.84
13.40	0.98	37.47	3.98	0.02	-----	-----	1.61	-----	-----	-----	1.63
13.50	0.91	37.44	3.91	0.02	-----	-----	1.43	-----	-----	-----	1.45
13.60	0.86	37.41	3.85	0.02	-----	-----	1.28	-----	-----	-----	1.30
13.70	0.82	37.38	3.80	0.02	-----	-----	1.17	-----	-----	-----	1.19
13.80	0.78	37.36	3.75	0.02	-----	-----	1.08	-----	-----	-----	1.10
13.90	0.75	37.34	3.72	0.02	-----	-----	1.00	-----	-----	-----	1.02
14.00	0.72	37.33	3.68	0.02	-----	-----	0.94	-----	-----	-----	0.96
14.10	0.69	37.32	3.66	0.02	-----	-----	0.88	-----	-----	-----	0.90
14.20	0.67	37.30	3.63	0.02	-----	-----	0.83	-----	-----	-----	0.85
14.30	0.64	37.29	3.61	0.02	-----	-----	0.79	-----	-----	-----	0.81
14.40	0.62	37.28	3.59	0.02	-----	-----	0.75	-----	-----	-----	0.77
14.50	0.60	37.28	3.57	0.02	-----	-----	0.72	-----	-----	-----	0.74
14.60	0.58	37.27	3.55	0.02	-----	-----	0.69	-----	-----	-----	0.71
14.70	0.57	37.26	3.53	0.02	-----	-----	0.67	-----	-----	-----	0.68
14.80	0.55	37.25	3.52	0.02	-----	-----	0.64	-----	-----	-----	0.66
14.90	0.54	37.25	3.50	0.02	-----	-----	0.62	-----	-----	-----	0.64
15.00	0.52	37.24	3.49	0.02	-----	-----	0.60	-----	-----	-----	0.61
15.10	0.51	37.24	3.48	0.02	-----	-----	0.58	-----	-----	-----	0.59
15.20	0.49	37.23	3.47	0.02	-----	-----	0.56	-----	-----	-----	0.58
15.30	0.48	37.23	3.46	0.02	-----	-----	0.54	-----	-----	-----	0.56
15.40	0.47	37.22	3.45	0.02	-----	-----	0.52	-----	-----	-----	0.54
15.50	0.45	37.22	3.44	0.02	-----	-----	0.51	-----	-----	-----	0.52
15.60	0.44	37.21	3.43	0.02	-----	-----	0.49	-----	-----	-----	0.51

Continues on next page...

Hydrograph Report

English

Hyd. No. 9

100yr Post-Route

Hydrograph type	= Reservoir	Peak discharge	= 5.09 cfs
Storm frequency	= 100 yrs	Time interval	= 6 min
Inflow hyd. No.	= 6	Reservoir name	= Bojangles SCS
Max. Elevation	= 38.11 ft	Max. Storage	= 14,135 cuft

Storage Indication method used.

Total Volume = 41,150 cuft

Hydrograph Discharge Table

Time (hrs)	Inflow cfs	Elevation ft	Clv A cfs	Clv B cfs	Clv C cfs	Clv D cfs	Wr A cfs	Wr B cfs	Wr C cfs	Wr D cfs	Outflow cfs
11.90	2.61	37.07	3.08	0.02	-----	-----	0.11	-----	-----	-----	0.13
12.00	3.86	37.24	3.50	0.02	-----	-----	0.60	-----	-----	-----	0.62
12.10	5.60	37.46	3.96	0.02	-----	-----	1.56	-----	-----	-----	1.57
12.20	6.63	37.69	4.40	0.02	-----	-----	2.87	-----	-----	-----	2.88
12.30	6.79 <<	37.87	4.70	0.00	-----	-----	4.02	3.79	-----	-----	4.70
12.40	6.62	37.98	4.89	-----	-----	-----	4.83	8.05	-----	-----	4.89
12.50	6.14	38.07	5.03	-----	-----	-----	5.48	11.92	-----	-----	5.03
12.60	5.42	38.11 <<	5.09	-----	-----	-----	5.81	14.02	-----	-----	5.09 <<
12.70	4.62	38.11	5.09	-----	-----	-----	5.78	13.81	-----	-----	5.09
12.80	3.83	38.06	5.01	-----	-----	-----	5.40	11.44	-----	-----	5.01
12.90	3.06	37.97	4.87	-----	-----	-----	4.73	7.47	-----	-----	4.87
13.00	2.36	37.85	4.66	0.01	-----	-----	3.86	3.08	-----	-----	4.66
13.10	1.85	37.73	4.46	0.01	-----	-----	3.09	0.50	-----	-----	3.42
13.20	1.54	37.65	4.32	0.02	-----	-----	2.60	-----	-----	-----	2.62
13.30	1.33	37.59	4.21	0.02	-----	-----	2.25	-----	-----	-----	2.26
13.40	1.20	37.54	4.11	0.02	-----	-----	1.96	-----	-----	-----	1.98
13.50	1.12	37.50	4.03	0.02	-----	-----	1.73	-----	-----	-----	1.75
13.60	1.06	37.46	3.96	0.02	-----	-----	1.56	-----	-----	-----	1.58
13.70	1.01	37.43	3.90	0.02	-----	-----	1.42	-----	-----	-----	1.44
13.80	0.96	37.41	3.85	0.02	-----	-----	1.30	-----	-----	-----	1.32
13.90	0.92	37.39	3.81	0.02	-----	-----	1.21	-----	-----	-----	1.23
14.00	0.88	37.37	3.78	0.02	-----	-----	1.13	-----	-----	-----	1.15
14.10	0.85	37.36	3.75	0.02	-----	-----	1.07	-----	-----	-----	1.08
14.20	0.82	37.34	3.72	0.02	-----	-----	1.01	-----	-----	-----	1.03
14.30	0.79	37.33	3.69	0.02	-----	-----	0.96	-----	-----	-----	0.97
14.40	0.76	37.32	3.67	0.02	-----	-----	0.91	-----	-----	-----	0.93
14.50	0.74	37.31	3.65	0.02	-----	-----	0.87	-----	-----	-----	0.89
14.60	0.72	37.30	3.63	0.02	-----	-----	0.83	-----	-----	-----	0.85
14.70	0.69	37.30	3.61	0.02	-----	-----	0.80	-----	-----	-----	0.82
14.80	0.68	37.29	3.60	0.02	-----	-----	0.77	-----	-----	-----	0.79
14.90	0.66	37.28	3.58	0.02	-----	-----	0.75	-----	-----	-----	0.77
15.00	0.64	37.28	3.57	0.02	-----	-----	0.73	-----	-----	-----	0.74
15.10	0.62	37.27	3.56	0.02	-----	-----	0.70	-----	-----	-----	0.72
15.20	0.61	37.26	3.54	0.02	-----	-----	0.68	-----	-----	-----	0.70
15.30	0.59	37.26	3.53	0.02	-----	-----	0.66	-----	-----	-----	0.68
15.40	0.57	37.25	3.52	0.02	-----	-----	0.64	-----	-----	-----	0.66

Continues on next page...

Hydrograph Report

English

Hyd. No. 10

1-year Rational pre

Hydrograph type	= Rational	Peak discharge	= 1.02 cfs
Storm frequency	= 2 yrs	Time interval	= 1 min
Drainage area	= 1.3 ac	Runoff coeff.	= 0.2
Intensity	= 3.94 in	Time of conc. (Tc)	= 20 min
I-D-F Curve	= newhanover.IDF	Reced. limb factor	= 1

Total Volume = 1,229 cuft

Hydrograph Discharge Table

Time -- Outflow (hrs cfs)		Time -- Outflow (hrs cfs)	
0.02	0.05	0.55	0.36
0.03	0.10	0.57	0.31
0.05	0.15	0.58	0.26
0.07	0.20	0.60	0.20
0.08	0.26	0.62	0.15
0.10	0.31	0.63	0.10
0.12	0.36	0.65	0.05
0.13	0.41		
0.15	0.46		
0.17	0.51	*...End*	
0.18	0.56		
0.20	0.61		
0.22	0.67		
0.23	0.72		
0.25	0.77		
0.27	0.82		
0.28	0.87		
0.30	0.92		
0.32	0.97		
0.33	1.02 <<		
0.35	0.97		
0.37	0.92		
0.38	0.87		
0.40	0.82		
0.42	0.77		
0.43	0.72		
0.45	0.67		
0.47	0.61		
0.48	0.56		
0.50	0.51		
0.52	0.46		
0.53	0.41		

Hydrograph Report

English

Hyd. No. 11

1-year post

Hydrograph type	= Rational	Peak discharge	= 4.89 cfs
Storm frequency	= 2 yrs	Time interval	= 1 min
Drainage area	= 1.3 ac	Runoff coeff.	= 0.85
Intensity	= 4.42 in	Time of conc. (Tc)	= 15 min
I-D-F Curve	= newhanover.IDF	Reced. limb factor	= 1

Total Volume = 4,401 cuft

Hydrograph Discharge Table

Time -- (hrs	Outflow cfs)
0.02	0.33
0.03	0.65
0.05	0.98
0.07	1.30
0.08	1.63
0.10	1.96
0.12	2.28
0.13	2.61
0.15	2.93
0.17	3.26
0.18	3.59
0.20	3.91
0.22	4.24
0.23	4.56
0.25	4.89 <<
0.27	4.56
0.28	4.24
0.30	3.91
0.32	3.59
0.33	3.26
0.35	2.93
0.37	2.61
0.38	2.28
0.40	1.96
0.42	1.63
0.43	1.30
0.45	0.98
0.47	0.65
0.48	0.33

...End

Hydrograph Report

English

Hyd. No. 12

1-year routed

Hydrograph type	= Reservoir	Peak discharge	= 0.01 cfs
Storm frequency	= 2 yrs	Time interval	= 1 min
Inflow hyd. No.	= 11	Reservoir name	= Bojangles SCS
Max. Elevation	= 36.44 ft	Max. Storage	= 4,393 cuft

Storage Indication method used.

Total Volume = 812 cuft

Hydrograph Discharge Table

Time (hrs)	Inflow cfs	Elevation ft	Clv A cfs	Clv B cfs	Clv C cfs	Clv D cfs	Wr A cfs	Wr B cfs	Wr C cfs	Wr D cfs	Outflow cfs
0.25	4.89 <<	36.03	0.20	0.00	-----	-----	-----	-----	-----	-----	0.00
0.27	4.56	36.09	0.50	0.00	-----	-----	-----	-----	-----	-----	0.00
0.28	4.24	36.13	0.76	0.01	-----	-----	-----	-----	-----	-----	0.01
0.30	3.91	36.18	1.00	0.01	-----	-----	-----	-----	-----	-----	0.01
0.32	3.59	36.22	1.20	0.01	-----	-----	-----	-----	-----	-----	0.01
0.33	3.26	36.26	1.38	0.01	-----	-----	-----	-----	-----	-----	0.01
0.35	2.93	36.29	1.53	0.01	-----	-----	-----	-----	-----	-----	0.01
0.37	2.61	36.32	1.62	0.01	-----	-----	-----	-----	-----	-----	0.01
0.38	2.28	36.35	1.68	0.01	-----	-----	-----	-----	-----	-----	0.01
0.40	1.96	36.37	1.73	0.01	-----	-----	-----	-----	-----	-----	0.01
0.42	1.63	36.39	1.78	0.01	-----	-----	-----	-----	-----	-----	0.01
0.43	1.30	36.41	1.81	0.01	-----	-----	-----	-----	-----	-----	0.01
0.45	0.98	36.42	1.84	0.01	-----	-----	-----	-----	-----	-----	0.01
0.47	0.65	36.43	1.86	0.01	-----	-----	-----	-----	-----	-----	0.01
0.48	0.33	36.43	1.87	0.01	-----	-----	-----	-----	-----	-----	0.01
0.50	0.00	36.44 <<	1.87	0.01	-----	-----	-----	-----	-----	-----	0.01 <<
0.52	0.00	36.44	1.87	0.01	-----	-----	-----	-----	-----	-----	0.01
0.53	0.00	36.44	1.87	0.01	-----	-----	-----	-----	-----	-----	0.01
0.55	0.00	36.44	1.87	0.01	-----	-----	-----	-----	-----	-----	0.01
0.57	0.00	36.44	1.87	0.01	-----	-----	-----	-----	-----	-----	0.01
0.58	0.00	36.44	1.87	0.01	-----	-----	-----	-----	-----	-----	0.01
0.60	0.00	36.44	1.87	0.01	-----	-----	-----	-----	-----	-----	0.01
0.62	0.00	36.44	1.87	0.01	-----	-----	-----	-----	-----	-----	0.01
0.63	0.00	36.44	1.87	0.01	-----	-----	-----	-----	-----	-----	0.01
0.65	0.00	36.44	1.87	0.01	-----	-----	-----	-----	-----	-----	0.01
0.67	0.00	36.44	1.87	0.01	-----	-----	-----	-----	-----	-----	0.01
0.68	0.00	36.43	1.87	0.01	-----	-----	-----	-----	-----	-----	0.01
0.70	0.00	36.43	1.87	0.01	-----	-----	-----	-----	-----	-----	0.01
0.72	0.00	36.43	1.87	0.01	-----	-----	-----	-----	-----	-----	0.01
0.73	0.00	36.43	1.87	0.01	-----	-----	-----	-----	-----	-----	0.01
0.75	0.00	36.43	1.87	0.01	-----	-----	-----	-----	-----	-----	0.01
0.77	0.00	36.43	1.87	0.01	-----	-----	-----	-----	-----	-----	0.01
0.78	0.00	36.43	1.87	0.01	-----	-----	-----	-----	-----	-----	0.01
0.80	0.00	36.43	1.87	0.01	-----	-----	-----	-----	-----	-----	0.01
0.82	0.00	36.43	1.87	0.01	-----	-----	-----	-----	-----	-----	0.01
0.83	0.00	36.43	1.87	0.01	-----	-----	-----	-----	-----	-----	0.01

Continues on next page...

Hydrograph Report

English

Hyd. No. 13

25-YR PRE

Hydrograph type	= SCS Runoff	Peak discharge	= 2.80 cfs
Storm frequency	= 25 yrs	Time interval	= 6 min
Drainage area	= 1.30 ac	Curve number	= 68
Basin Slope	= 0.5 %	Hydraulic length	= 350 ft
Tc method	= USER	Time of conc. (Tc)	= 20 min
Total precip.	= 8.50 in	Distribution	= Type III
Storm duration	= 24 hrs	Shape factor	= 242

Total Volume = 21,984 cuft

Hydrograph Discharge Table

Time -- Outflow (hrs cfs)		Time -- Outflow (hrs cfs)		Time -- Outflow (hrs cfs)		Time -- Outflow (hrs cfs)	
9.20	0.03	12.40	2.78	15.60	0.34	18.80	0.15
9.30	0.03	12.50	2.80 <<	15.70	0.33	18.90	0.15
9.40	0.04	12.60	2.73	15.80	0.32	19.00	0.14
9.50	0.05	12.70	2.58	15.90	0.31	19.10	0.14
9.60	0.05	12.80	2.40	16.00	0.30	19.20	0.14
9.70	0.06	12.90	2.21	16.10	0.29	19.30	0.14
9.80	0.06	13.00	2.01	16.20	0.28	19.40	0.14
9.90	0.07	13.10	1.79	16.30	0.27	19.50	0.14
10.00	0.08	13.20	1.57	16.40	0.26	19.60	0.14
10.10	0.09	13.30	1.35	16.50	0.25	19.70	0.13
10.20	0.10	13.40	1.14	16.60	0.25	19.80	0.13
10.30	0.10	13.50	0.95	16.70	0.24	19.90	0.13
10.40	0.11	13.60	0.81	16.80	0.23	20.00	0.13
10.50	0.13	13.70	0.72	16.90	0.23	20.10	0.13
10.60	0.14	13.80	0.65	17.00	0.22	20.20	0.13
10.70	0.15	13.90	0.60	17.10	0.22	20.30	0.13
10.80	0.16	14.00	0.57	17.20	0.21	20.40	0.12
10.90	0.18	14.10	0.55	17.30	0.21	20.50	0.12
11.00	0.19	14.20	0.52	17.40	0.20	20.60	0.12
11.10	0.21	14.30	0.50	17.50	0.20	20.70	0.12
11.20	0.23	14.40	0.48	17.60	0.19	20.80	0.12
11.30	0.25	14.50	0.47	17.70	0.19	20.90	0.12
11.40	0.28	14.60	0.45	17.80	0.18	21.00	0.12
11.50	0.31	14.70	0.44	17.90	0.18	21.10	0.12
11.60	0.36	14.80	0.43	18.00	0.18	21.20	0.11
11.70	0.44	14.90	0.41	18.10	0.17	21.30	0.11
11.80	0.58	15.00	0.40	18.20	0.17	21.40	0.11
11.90	0.78	15.10	0.39	18.30	0.16	21.50	0.11
12.00	1.16	15.20	0.38	18.40	0.16	21.60	0.11
12.10	1.71	15.30	0.37	18.50	0.16	21.70	0.11
12.20	2.27	15.40	0.36	18.60	0.15	21.80	0.11
12.30	2.64	15.50	0.35	18.70	0.15	21.90	0.10

Continues on next page...

Hydrograph Report

English

Hyd. No. 14

25-YR POST

Hydrograph type	= SCS Runoff	Peak discharge	= 4.37 cfs
Storm frequency	= 25 yrs	Time interval	= 6 min
Drainage area	= 1.30 ac	Curve number	= 77
Basin Slope	= 0.5 %	Hydraulic length	= 350 ft
Tc method	= USER	Time of conc. (Tc)	= 15 min
Total precip.	= 8.50 in	Distribution	= Type III
Storm duration	= 24 hrs	Shape factor	= 242

Total Volume = 27,909 cuft

Hydrograph Discharge Table

Time (hrs)	Outflow (cfs)	Time (hrs)	Outflow (cfs)	Time (hrs)	Outflow (cfs)	Time (hrs)	Outflow (cfs)
8.00	0.05	11.20	0.44	14.40	0.51	17.60	0.21
8.10	0.05	11.30	0.48	14.50	0.50	17.70	0.20
8.20	0.06	11.40	0.53	14.60	0.48	17.80	0.20
8.30	0.06	11.50	0.59	14.70	0.47	17.90	0.19
8.40	0.07	11.60	0.68	14.80	0.46	18.00	0.19
8.50	0.07	11.70	0.86	14.90	0.45	18.10	0.18
8.60	0.08	11.80	1.17	15.00	0.43	18.20	0.18
8.70	0.08	11.90	1.59	15.10	0.42	18.30	0.17
8.80	0.09	12.00	2.40	15.20	0.41	18.40	0.17
8.90	0.10	12.10	3.54	15.30	0.40	18.50	0.17
9.00	0.11	12.20	4.23	15.40	0.39	18.60	0.17
9.10	0.11	12.30	4.37 <<	15.50	0.38	18.70	0.16
9.20	0.12	12.40	4.28	15.60	0.36	18.80	0.16
9.30	0.13	12.50	3.99	15.70	0.35	18.90	0.16
9.40	0.14	12.60	3.54	15.80	0.34	19.00	0.16
9.50	0.15	12.70	3.03	15.90	0.33	19.10	0.16
9.60	0.16	12.80	2.52	16.00	0.32	19.20	0.16
9.70	0.17	12.90	2.03	16.10	0.31	19.30	0.15
9.80	0.18	13.00	1.57	16.20	0.29	19.40	0.15
9.90	0.19	13.10	1.23	16.30	0.29	19.50	0.15
10.00	0.20	13.20	1.03	16.40	0.28	19.60	0.15
10.10	0.22	13.30	0.90	16.50	0.27	19.70	0.15
10.20	0.23	13.40	0.81	16.60	0.26	19.80	0.15
10.30	0.24	13.50	0.75	16.70	0.26	19.90	0.14
10.40	0.26	13.60	0.71	16.80	0.25	20.00	0.14
10.50	0.28	13.70	0.68	16.90	0.25	20.10	0.14
10.60	0.29	13.80	0.65	17.00	0.24	20.20	0.14
10.70	0.31	13.90	0.62	17.10	0.23	20.30	0.14
10.80	0.34	14.00	0.60	17.20	0.23	20.40	0.14
10.90	0.36	14.10	0.57	17.30	0.22	20.50	0.14
11.00	0.38	14.20	0.55	17.40	0.22	20.60	0.13
11.10	0.41	14.30	0.53	17.50	0.21	20.70	0.13

Continues on next page...

Hydrograph Report

English

Hyd. No. 15

25-YR ROUTED

Hydrograph type	= Reservoir	Peak discharge	= 2.81 cfs
Storm frequency	= 25 yrs	Time interval	= 6 min
Inflow hyd. No.	= 14	Reservoir name	= Bojangles SCS
Max. Elevation	= 37.68 ft	Max. Storage	= 11,557 cuft

Storage Indication method used.

Total Volume = 25,096 cuft

Hydrograph Discharge Table

Time (hrs)	Inflow cfs	Elevation ft	Clv A cfs	Clv B cfs	Clv C cfs	Clv D cfs	Wr A cfs	Wr B cfs	Wr C cfs	Wr D cfs	Outflow cfs
12.30	4.37 <<	37.22	3.44	0.02	-----	-----	0.51	-----	-----	-----	0.53
12.40	4.28	37.42	3.88	0.02	-----	-----	1.36	-----	-----	-----	1.37
12.50	3.99	37.56	4.16	0.02	-----	-----	2.10	-----	-----	-----	2.12
12.60	3.54	37.65	4.31	0.02	-----	-----	2.59	-----	-----	-----	2.61
12.70	3.03	37.68	4.38	0.02	-----	-----	2.80	-----	-----	-----	2.81 <<
12.80	2.52	37.68	4.37	0.02	-----	-----	2.79	-----	-----	-----	2.80
12.90	2.03	37.65	4.33	0.02	-----	-----	2.63	-----	-----	-----	2.64
13.00	1.57	37.61	4.25	0.02	-----	-----	2.37	-----	-----	-----	2.39
13.10	1.23	37.56	4.15	0.02	-----	-----	2.09	-----	-----	-----	2.10
13.20	1.03	37.51	4.06	0.02	-----	-----	1.81	-----	-----	-----	1.83
13.30	0.90	37.47	3.97	0.02	-----	-----	1.58	-----	-----	-----	1.60
13.40	0.81	37.43	3.89	0.02	-----	-----	1.39	-----	-----	-----	1.40
13.50	0.75	37.39	3.82	0.02	-----	-----	1.23	-----	-----	-----	1.25
13.60	0.71	37.37	3.76	0.02	-----	-----	1.11	-----	-----	-----	1.13
13.70	0.68	37.34	3.72	0.02	-----	-----	1.01	-----	-----	-----	1.03
13.80	0.65	37.32	3.68	0.02	-----	-----	0.92	-----	-----	-----	0.94
13.90	0.62	37.31	3.64	0.02	-----	-----	0.85	-----	-----	-----	0.87
14.00	0.60	37.29	3.61	0.02	-----	-----	0.79	-----	-----	-----	0.81
14.10	0.57	37.28	3.58	0.02	-----	-----	0.75	-----	-----	-----	0.77
14.20	0.55	37.27	3.56	0.02	-----	-----	0.71	-----	-----	-----	0.73
14.30	0.53	37.26	3.54	0.02	-----	-----	0.67	-----	-----	-----	0.69
14.40	0.51	37.25	3.52	0.02	-----	-----	0.64	-----	-----	-----	0.66
14.50	0.50	37.24	3.50	0.02	-----	-----	0.61	-----	-----	-----	0.63
14.60	0.48	37.24	3.48	0.02	-----	-----	0.58	-----	-----	-----	0.60
14.70	0.47	37.23	3.47	0.02	-----	-----	0.56	-----	-----	-----	0.57
14.80	0.46	37.22	3.45	0.02	-----	-----	0.53	-----	-----	-----	0.55
14.90	0.45	37.22	3.44	0.02	-----	-----	0.51	-----	-----	-----	0.53
15.00	0.43	37.21	3.43	0.02	-----	-----	0.50	-----	-----	-----	0.51
15.10	0.42	37.21	3.42	0.02	-----	-----	0.48	-----	-----	-----	0.50
15.20	0.41	37.21	3.41	0.02	-----	-----	0.46	-----	-----	-----	0.48
15.30	0.40	37.20	3.40	0.02	-----	-----	0.45	-----	-----	-----	0.47
15.40	0.39	37.20	3.39	0.02	-----	-----	0.44	-----	-----	-----	0.45
15.50	0.38	37.19	3.38	0.02	-----	-----	0.42	-----	-----	-----	0.44
15.60	0.36	37.19	3.37	0.02	-----	-----	0.41	-----	-----	-----	0.43
15.70	0.35	37.19	3.36	0.02	-----	-----	0.40	-----	-----	-----	0.42
15.80	0.34	37.18	3.35	0.02	-----	-----	0.39	-----	-----	-----	0.41

Continues on next page...

Reservoir Report

English

Reservoir No. 1 - Bojangles SCS

Pond Data

Pond storage is based on known contour areas

Stage / Storage Table

Stage ft	Elevation ft	Contour area sqft	Incr. Storage cuft	Total storage cuft
0.00	35.50	3,200	0	0
0.50	36.00	4,880	2,020	2,020
1.50	37.00	6,000	5,440	7,460
2.50	38.00	6,000	6,000	13,460
3.50	39.00	6,000	6,000	19,460
4.50	40.00	6,000	6,000	25,460

Culvert / Orifice Structures

		[A]	[B]	[C]	[D]
Rise in	=	15.0	1.0	0.0	0.0
Span in	=	15.0	1.0	0.0	0.0
No. Barrels	=	1	1	0	0
Invert El. ft	=	35.50	35.50	0.00	0.00
Length ft	=	282.0	10.0	0.0	0.0
Slope %	=	0.10	0.01	0.00	0.00
N-Value	=	.011	.011	.000	.000
Orif. Coeff.	=	0.60	0.60	0.00	0.00
Multi-Stage	=	-----	Yes	No	No

Weir Structures

		[A]	[B]	[C]	[D]
Crest Len ft	=	1.5	16.0	20.0	0.0
Crest El. ft	=	37.00	37.70	38.20	0.00
Weir Coeff.	=	3.30	3.30	3.00	0.00
Eqn. Exp.	=	1.50	1.50	1.50	0.00
Multi-Stage	=	Yes	Yes	No	No

Tailwater Elevation = 36.00 ft

Note: All outflows have been analyzed under inlet and outlet control.

Stage / Storage / Discharge Table

Stage ft	Storage cuft	Elevation ft	Clv A cfs	Clv B cfs	Clv C cfs	Clv D cfs	Wr A cfs	Wr B cfs	Wr C cfs	Wr D cfs	Discharge cfs
0.00	0	35.50	0.00	0.00	---	---	0.00	0.00	0.00	---	0.00
0.50	2,020	36.00	0.00	0.00	---	---	0.00	0.00	0.00	---	0.00
1.50	7,460	37.00	2.90	0.02	---	---	0.00	0.00	0.00	---	0.02
2.50	13,460	38.00	4.92	0.00	---	---	4.95	8.68	0.00	---	4.92
3.50	19,460	39.00	6.32	0.00	---	---	14.00	78.26	42.93	---	49.25
4.50	25,460	40.00	7.46	0.00	---	---	25.72	184.17	144.90	---	152.36