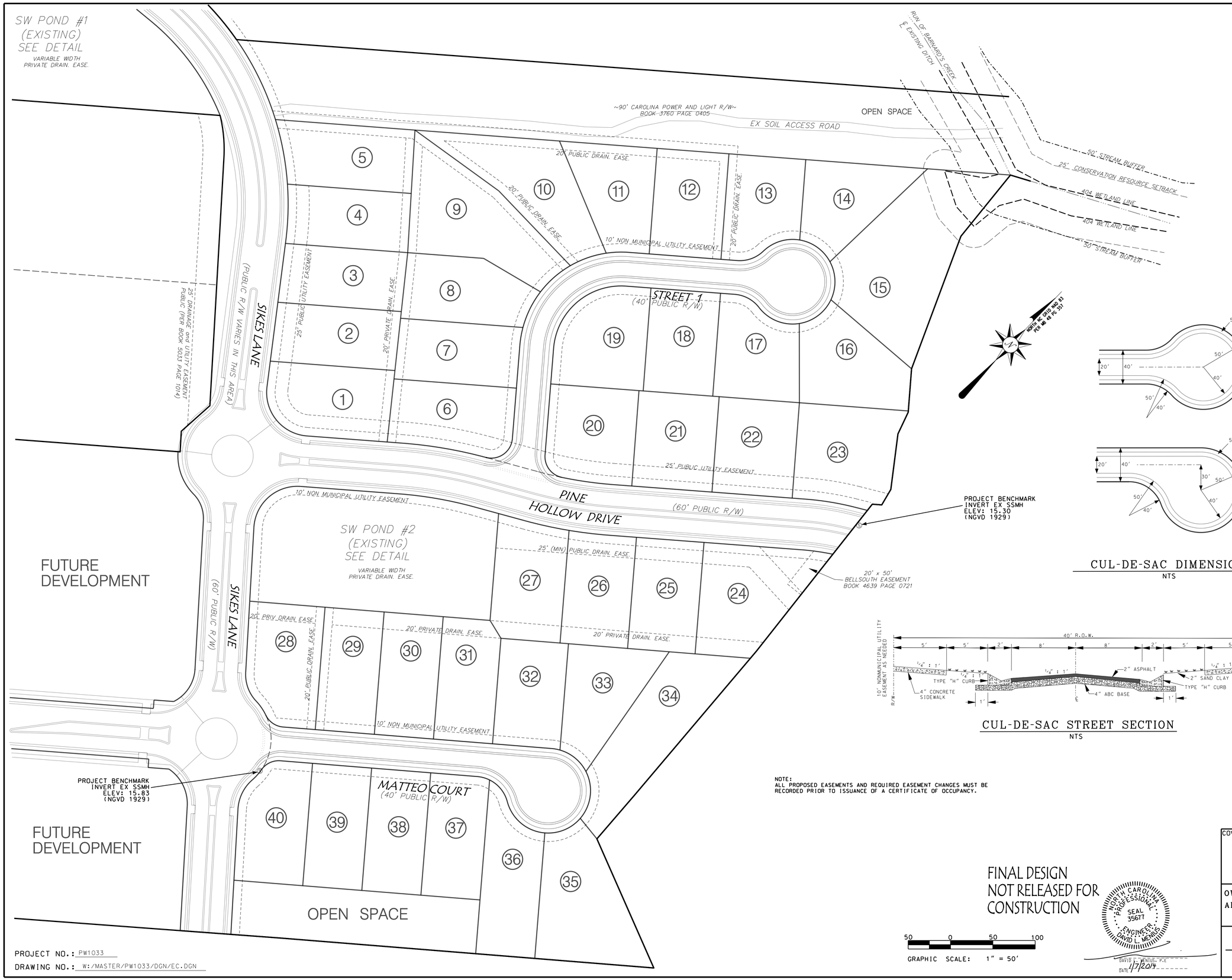

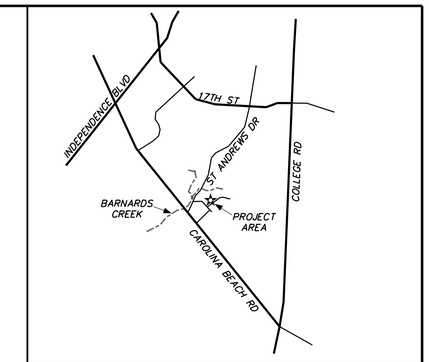

VICINITY MAP

NTS

- PROJECT BOUNDARY
- DISTURBED AREA
- SILT FENCE
- DRAINAGE BOUNDARY
- TST DRAINAGE BOUNDARY
- PROPOSED PIPE
- PROPOSED SWALE
- EXISTING PIPE
- 22.5 x PROPOSED SPOT ELEVATON

LEGEND

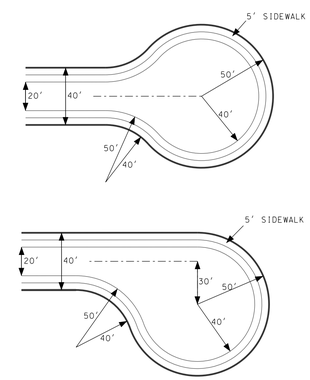

CUL-DE-SAC DIMENSIONS

NTS

COVER	1
GRADING	2
STORMWATER	3
UTILITIES	4
LANDSCAPING	5
PROFILES	6-7
SW POND DETAILS	8-9
GENERAL DETAILS	10-12
CFPUA WATER DETAILS	WSD1 - WSD2
CFPUA SEWER DETAILS	SSD1 - SSD2

SHEET INDEX

PROJECT AREA	35.06 AC
	1,527,272 SF
TAX PIN	R07100-003-001-001
ZONING	R-10
CAMA LAND CLASS	URBAN
RECEIVING STREAM	BARNARDS CREEK
CLASSIFICATION	C:SW
IMPERVIOUS AREA	
EXISTING (TO REMAIN)	174,552 SF
NEW STREETS	26,990 SF
NEW SIDEWALKS	10,321 SF
LOTS (40 @ 5,000 SF)	200,000 SF
OTHER	0 SF
TOTAL	411,863 SF
PERCENT BUA	27.0 %
DISTURBED AREA	12.9 AC

SITE DATA

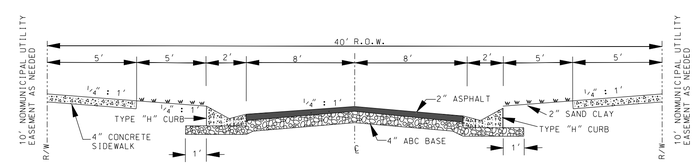

CUL-DE-SAC STREET SECTION

NTS

NOTE:
ALL PROPOSED EASEMENTS AND REQUIRED EASEMENT CHANGES MUST BE RECORDED PRIOR TO ISSUANCE OF A CERTIFICATE OF OCCUPANCY.

REVISIONS

BY	NO.	DATE	DESCRIPTION
DLM	1	9/6/2013	PER CFPUA
DLM	2	9/16/2013	PER CFPUA
DLM	3	11/26/2013	PER COW SW
DLM	4	1/7/2014	PER COW SW

FINAL DESIGN
NOT RELEASED FOR
CONSTRUCTION

NORTH CAROLINA PROFESSIONAL SEAL 35677 ENGINEER DAVID L. MENNIS

DAVID L. MENTUS, P.E.
DATE 1/7/2014

50 0 50 100
GRAPHIC SCALE: 1" = 50'

COVER

Belle Meade Village

WILMINGTON TOWNSHIP NEW HANOVER COUNTY NORTH CAROLINA

OWNER: SHP BELLEMEADE, LLC
ADDRESS: 1442 MILITARY CUTOFF RD, STE 26
WILMINGTON, NC 28403
(910 509-1781

STROUD ENGINEERING, P.A. C-0647
102-D CINEMA DRIVE
WILMINGTON, NORTH CAROLINA
(910) 815-0775 (910) 815-0593 FAX

DESIGNED:	JHF
DRAWN:	GAG
APPROVED:	JHF
DATE:	8/2/2013
SCALE:	1" = 50'
SHEET	1 OF 12

PROJECT NO.: PW1033
DRAWING NO.: W:/MASTER/PW1033/DGN/EC.DGN

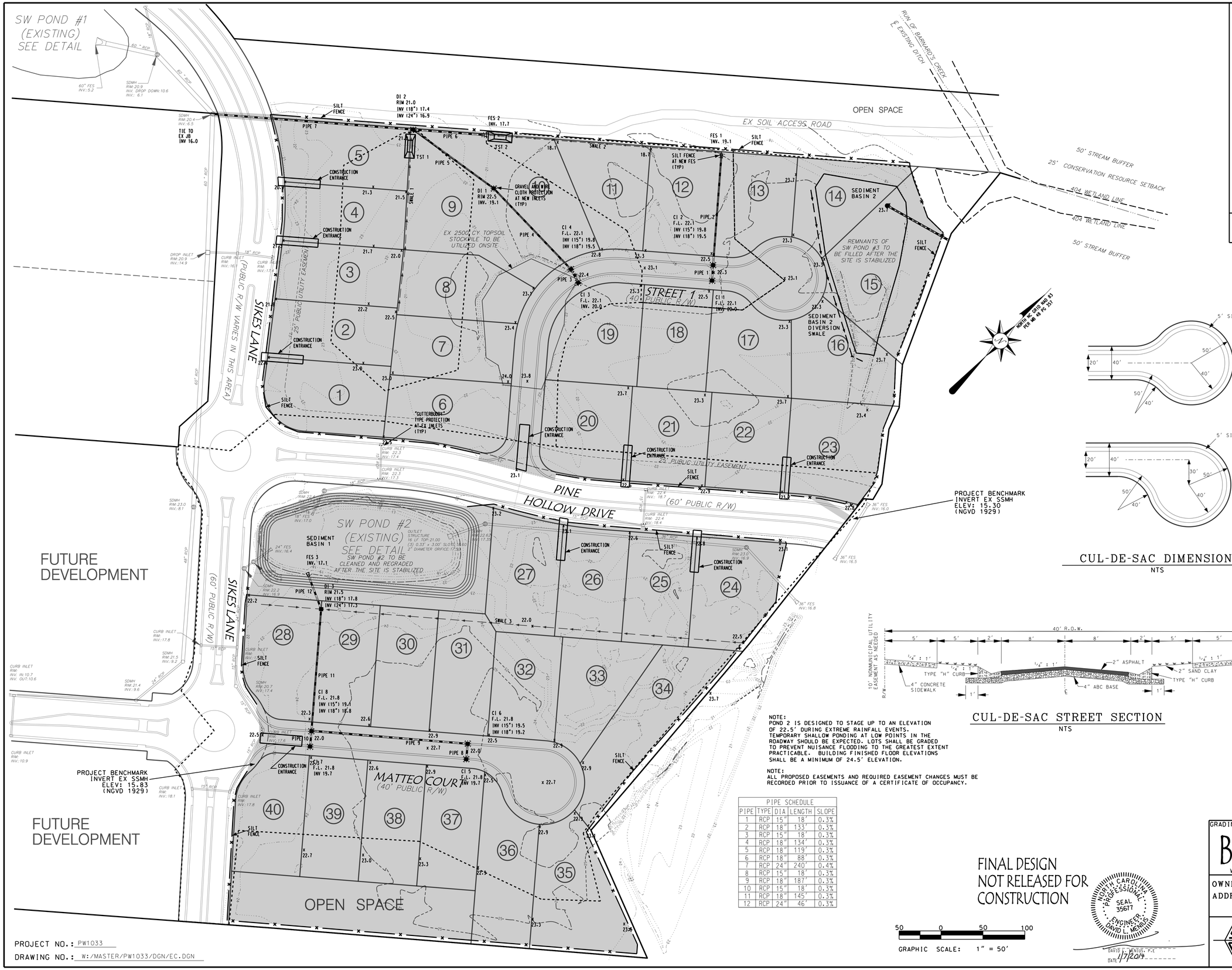

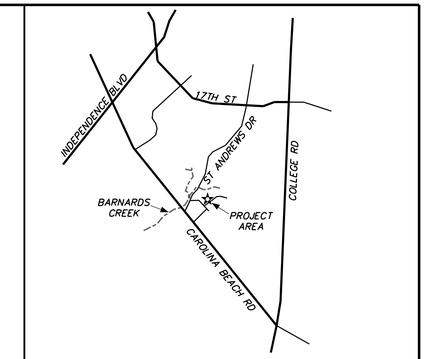

VICINITY MAP
NTS

PROJECT BOUNDARY
DISTURBED AREA
SILT FENCE
DRAINAGE BOUNDARY
TST DRAINAGE BOUNDARY
PROPOSED PIPE
PROPOSED SWALE
EXISTING PIPE
22.5 PROPOSED SPOT ELEVATON

LEGEND

COVER	1
GRADING	2
STORMWATER	3
UTILITIES	4
LANDSCAPING	5
PROFILES	6-7
SW POND DETAILS	8-9
GENERAL DETAILS	10-12
CFPUA WATER DETAILS	WSD1 - WSD2
CFPUA SEWER DETAILS	SSD1 - SSD2

SHEET INDEX

PROJECT AREA	35.06 AC
	1,527,272 SF
TAX PIN	R07100-003-001-001
ZONING	R-10
CAMA LAND CLASS	URBAN
RECEIVING STREAM	BARNARDS CREEK
CLASSIFICATION	C;SW
IMPERVIOUS AREA	
EXISTING (TO REMAIN)	174,552 SF
NEW STREETS	26,990 SF
NEW SIDEWALKS	10,321 SF
LOTS (40 @ 5,000 SF)	200,000 SF
OTHER	0 SF
TOTAL	411,863 SF
PERCENT BUA	27.0 %
DISTURBED AREA	12.9 AC

SITE DATA

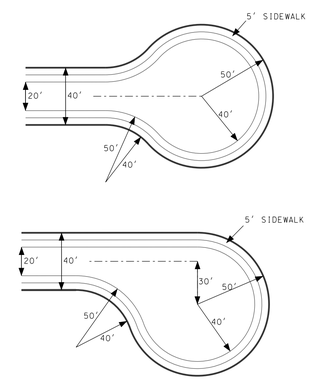

CUL-DE-SAC DIMENSIONS
NTS

CUL-DE-SAC STREET SECTION
NTS

NOTE:
POND 2 IS DESIGNED TO STAGE UP TO AN ELEVATION OF 22.5' DURING EXTREME RAINFALL EVENTS. TEMPORARY SHALLOW PONDING AT LOW POINTS IN THE ROADWAY SHOULD BE EXPECTED. LOTS SHALL BE GRADED TO PREVENT NUISANCE FLOODING TO THE GREATEST EXTENT PRACTICABLE. BUILDING FINISHED FLOOR ELEVATIONS SHALL BE A MINIMUM OF 24.5' ELEVATION.

NOTE:
ALL PROPOSED EASEMENTS AND REQUIRED EASEMENT CHANGES MUST BE RECORDED PRIOR TO ISSUANCE OF A CERTIFICATE OF OCCUPANCY.

PIPE SCHEDULE

PIPE	TYPE	DIA	LENGTH	SLOPE
1	RCP	15"	18'	0.3%
2	RCP	18"	133'	0.3%
3	RCP	15"	18'	0.3%
4	RCP	18"	134'	0.3%
5	RCP	18"	119'	0.3%
6	RCP	18"	88'	0.3%
7	RCP	24"	240'	0.4%
8	RCP	15"	18'	0.3%
9	RCP	18"	187'	0.3%
10	RCP	15"	18'	0.3%
11	RCP	18"	145'	0.3%
12	RCP	24"	46'	0.3%

FINAL DESIGN
NOT RELEASED FOR
CONSTRUCTION

NORTH CAROLINA PROFESSIONAL SEAL 35677 ENGINEER DAVID L. MENTUS

DAVID L. MENTUS, P.E.
DATE 1/7/2014

50 0 50 100
GRAPHIC SCALE: 1" = 50'

REVISIONS

BY	NO.	DATE	DESCRIPTION
DLM	1	9/6/2013	PER CFPUA
DLM	2	9/16/2013	PER CFPUA
DLM	3	11/26/2013	PER COW SW
DLM	4	1/7/2014	PER COW SW

GRADING AND EROSION CONTROL PLAN

Belle Meade Village

WILMINGTON TOWNSHIP NEW HANOVER COUNTY NORTH CAROLINA

OWNER: SHP BELLEMEADE, LLC
ADDRESS: 1442 MILITARY CUTOFF RD. STE 26
WILMINGTON, NC 28403
(910 509-1781

STROUD ENGINEERING, P.A.
C-0647
102-D CINEMA DRIVE
WILMINGTON, NORTH CAROLINA
(910) 815-0775 (910) 815-0593 FAX

DESIGNED:	JHF
DRAWN:	GAG
APPROVED:	JHF
DATE:	8/2/2013
SCALE:	1" = 50'
SHEET	2 OF 12

PROJECT NO.: PW1033
DRAWING NO.: W:/MASTER/PW1033/DGN/EC.DGN

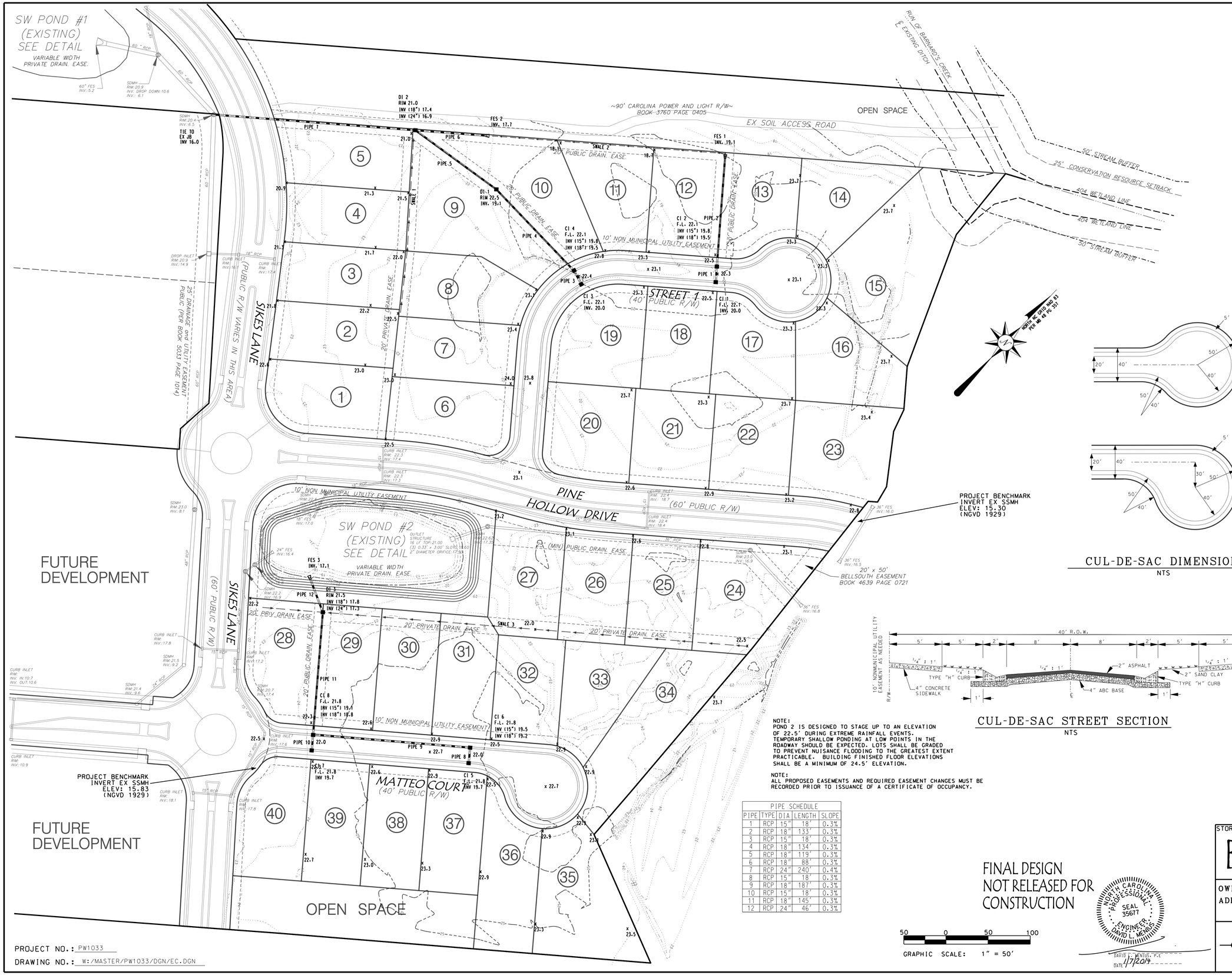

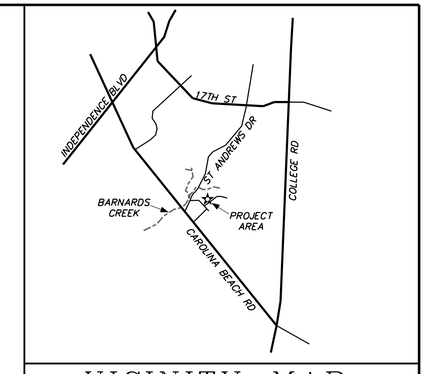

VICINITY MAP
NTS

PROJECT BOUNDARY	
DISTURBED AREA	
SILT FENCE	
DRAINAGE BOUNDARY	
TST DRAINAGE BOUNDARY	
PROPOSED PIPE	
PROPOSED SWALE	
EXISTING PIPE	
PROPOSED SPOT ELEVATON	22.5

LEGEND

COVER	1
GRADING	2
STORMWATER	3
UTILITIES	4
LANDSCAPING	5
PROFILES	6-7
SW POND DETAILS	8-9
GENERAL DETAILS	10-12
CFPUA WATER DETAILS	WSD1 - WSD2
CFPUA SEWER DETAILS	SSD1 - SSD2

SHEET INDEX

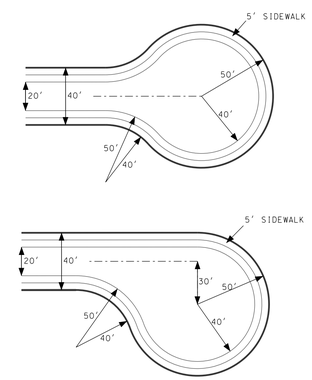

CUL-DE-SAC DIMENSIONS
NTS

PROJECT AREA	35.06 AC
	1,527,272 SF
TAX PIN	R07100-003-001-001
ZONING	R-10
CAMA LAND CLASS	URBAN
RECEIVING STREAM	BARNARDS CREEK
CLASSIFICATION	C;SW
IMPERVIOUS AREA	
EXISTING (TO REMAIN)	174,552 SF
NEW STREETS	26,990 SF
NEW SIDEWALKS	10,321 SF
LOTS (40 @ 5,000 SF)	200,000 SF
OTHER	0 SF
TOTAL	411,863 SF
PERCENT BUA	27.0 %
DISTURBED AREA	12.9 AC

SITE DATA

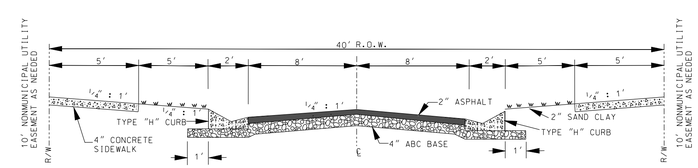

CUL-DE-SAC STREET SECTION
NTS

NOTE:
POND 2 IS DESIGNED TO STAGE UP TO AN ELEVATION OF 22.5' DURING EXTREME RAINFALL EVENTS. TEMPORARY SHALLOW PONDING AT LOW POINTS IN THE ROADWAY SHOULD BE EXPECTED. LOTS SHALL BE GRADED TO PREVENT NUISANCE FLOODING TO THE GREATEST EXTENT PRACTICABLE. BUILDING FINISHED FLOOR ELEVATIONS SHALL BE A MINIMUM OF 24.5' ELEVATION.

NOTE:
ALL PROPOSED EASEMENTS AND REQUIRED EASEMENT CHANGES MUST BE RECORDED PRIOR TO ISSUANCE OF A CERTIFICATE OF OCCUPANCY.

PIPE SCHEDULE

PIPE	TYPE	DIA	LENGTH	SLOPE
1	RCP	15"	18'	0.3%
2	RCP	18"	133'	0.3%
3	RCP	15"	18'	0.3%
4	RCP	18"	134'	0.3%
5	RCP	18"	119'	0.3%
6	RCP	18"	88'	0.3%
7	RCP	24"	240'	0.4%
8	RCP	15"	18'	0.3%
9	RCP	18"	187'	0.3%
10	RCP	15"	18'	0.3%
11	RCP	18"	145'	0.3%
12	RCP	24"	46'	0.3%

FINAL DESIGN
NOT RELEASED FOR
CONSTRUCTION

NORTH CAROLINA PROFESSIONAL SEAL 35677 ENGINEER DAVID L. MENTUS

DAVID L. MENTUS, P.E.
DATE 1/7/2014

50 0 50 100
GRAPHIC SCALE: 1" = 50'

REVISIONS

BY	NO.	DATE	DESCRIPTION
DLM	1	9/6/2013	PER CFPUA
DLM	2	9/16/2013	PER CFPUA
DLM	3	11/26/2013	PER COW SW
DLM	4	1/7/2014	PER COW SW

STORMWATER MANAGEMENT PLAN

Belle Meade Village

WILMINGTON TOWNSHIP NEW HANOVER COUNTY NORTH CAROLINA

OWNER: SHP BELLEMEADE, LLC
ADDRESS: 1442 MILITARY CUTOFF RD. STE 26
WILMINGTON, NC 28403
(910 509-1781

STROUD ENGINEERING, P.A.
C-0647
102-D CINEMA DRIVE
WILMINGTON, NORTH CAROLINA
(910) 815-0775 (910) 815-0593 FAX

DESIGNED:	JHF
DRAWN:	GAG
APPROVED:	JHF
DATE:	8/2/2013
SCALE:	1" = 50'
SHEET	3 OF 12

PROJECT NO.: PW1033
DRAWING NO.: W:/MASTER/PW1033/DGN/EC.DGN

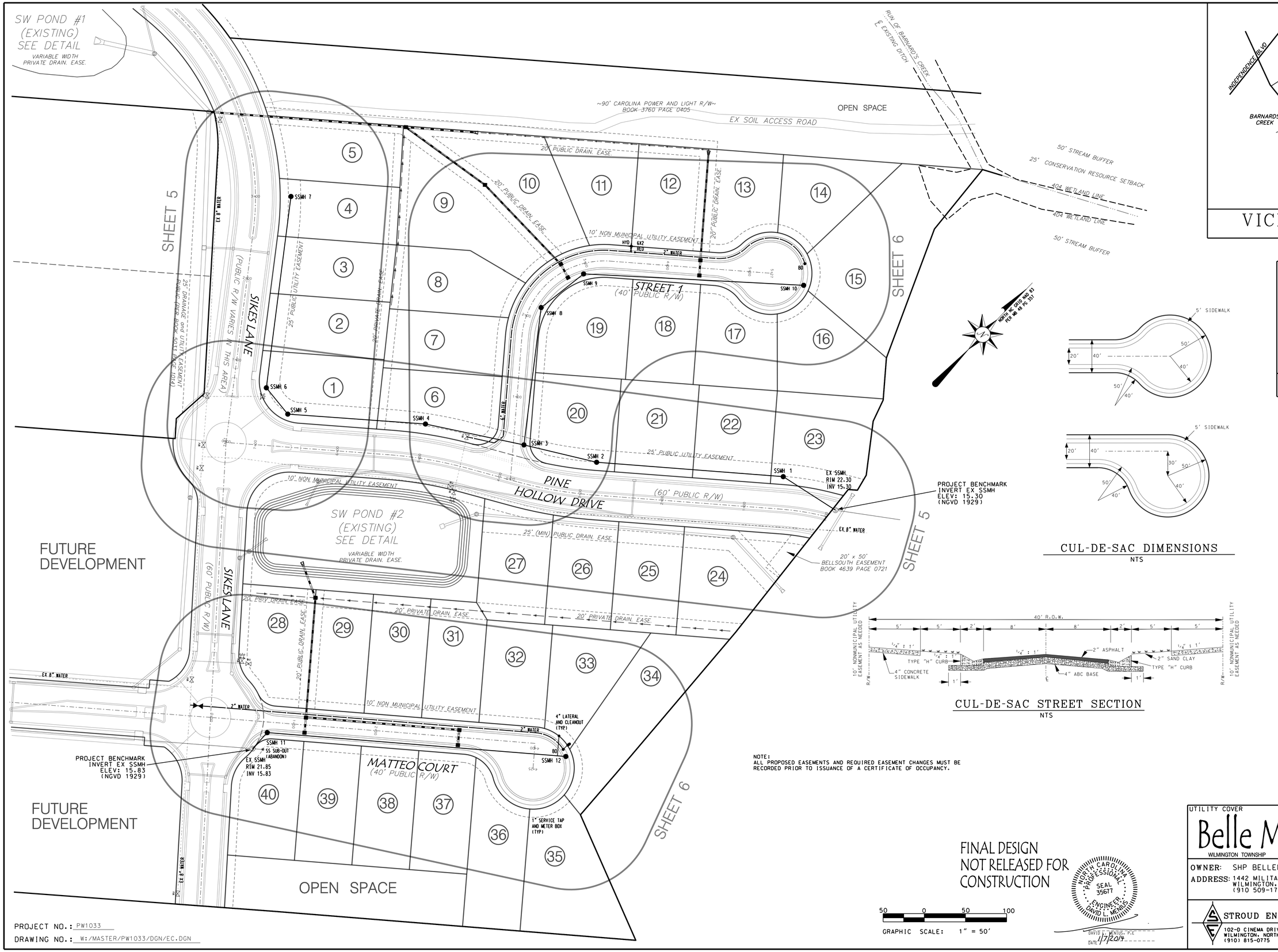

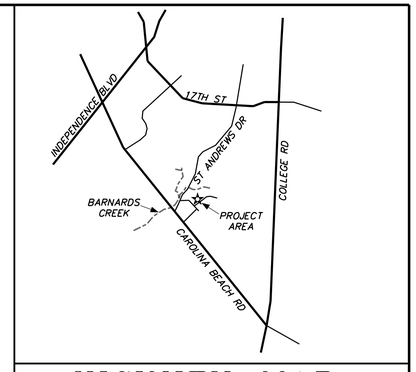

VICINITY MAP
NTS

PROJECT BOUNDARY	
DISTURBED AREA	
SILT FENCE	
DRAINAGE BOUNDARY	
TST DRAINAGE BOUNDARY	
PROPOSED PIPE	
PROPOSED SWALE	
EXISTING PIPE	
22.5 x	PROPOSED SPOT ELEVATON

LEGEND

COVER	1
GRADING	2
STORMWATER	3
UTILITIES	4
LANDSCAPING	5
PROFILES	6-7
SW POND DETAILS	8-9
GENERAL DETAILS	10-12
CFPUA WATER DETAILS	WSD1 - WSD2
CFPUA SEWER DETAILS	SSD1 - SSD2

SHEET INDEX

PROJECT AREA	35.06 AC 1,527,272 SF
TAX PIN	R07100-003-001-001
ZONING	R-10
CAMA LAND CLASS	URBAN
RECEIVING STREAM	BARNARDS CREEK
CLASSIFICATION	CSW
IMPERVIOUS AREA	
EXISTING (TO REMAIN)	174,552 SF
NEW STREETS	26,990 SF
NEW SIDEWALKS	10,321 SF
LOTS (40 @ 5,000 SF)	200,000 SF
OTHER	0 SF
TOTAL	411,863 SF
PERCENT BUA	27.0 %
DISTURBED AREA	12.9 AC

SITE DATA

CUL-DE-SAC DIMENSIONS
NTS

CUL-DE-SAC STREET SECTION
NTS

NOTE:
ALL PROPOSED EASEMENTS AND REQUIRED EASEMENT CHANGES MUST BE RECORDED PRIOR TO ISSUANCE OF A CERTIFICATE OF OCCUPANCY.

REVISIONS

BY	NO.	DATE	DESCRIPTION
DLM	1	9/6/2013	PER CFPUA
DLM	2	9/16/2013	PER CFPUA
DLM	3	11/26/2013	PER COW SW
DLM	4	1/7/2014	PER COW SW

FINAL DESIGN
NOT RELEASED FOR
CONSTRUCTION

NORTH CAROLINA PROFESSIONAL SEAL 35677 ENGINEER DAVID L. MENTUS

DAVID L. MENTUS, P.E.
DATE 1/7/2014

UTILITY COVER

Belle Meade Village

WILMINGTON TOWNSHIP NEW HANOVER COUNTY NORTH CAROLINA

OWNER: SHP BELLEMEADE, LLC
ADDRESS: 1442 MILITARY CUTOFF RD. STE 26
WILMINGTON, NC 28403
(910 509-1781

STROUD ENGINEERING, P.A.
C-0647
102-D CINEMA DRIVE
WILMINGTON, NORTH CAROLINA
(910) 815-0775 (910) 815-0593 FAX

DESIGNED:	JHF
DRAWN:	GAG
APPROVED:	JHF
DATE:	8/2/2013
SCALE:	1" = 50'
SHEET	4 OF 12

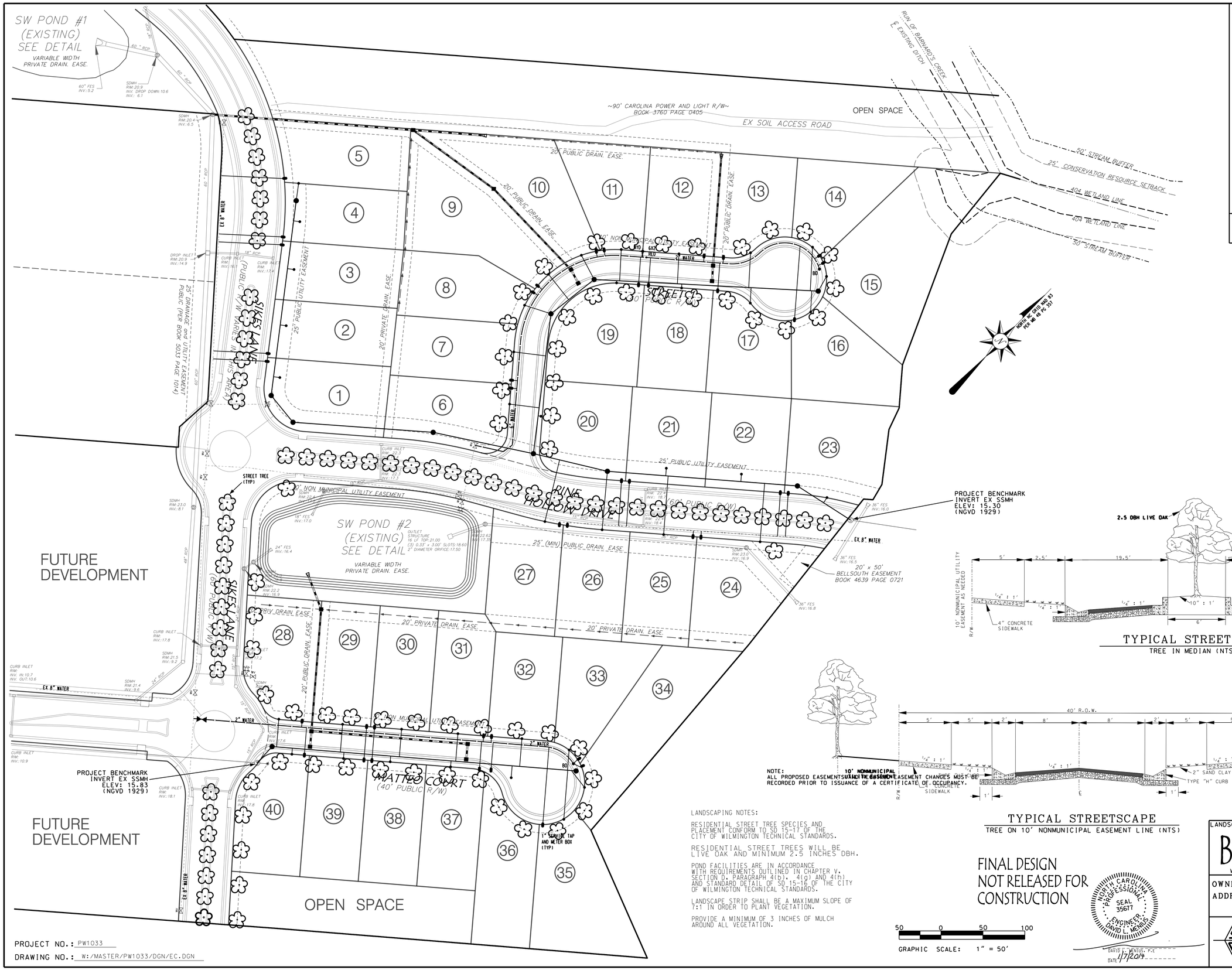

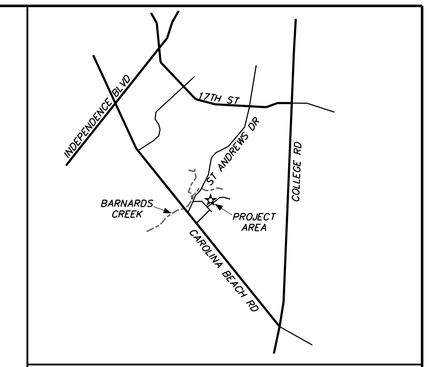

VICINITY MAP
NTS

- PROJECT BOUNDARY
- DISTURBED AREA
- SILT FENCE
- DRAINAGE BOUNDARY
- TST DRAINAGE BOUNDARY
- PROPOSED PIPE
- PROPOSED SWALE
- EXISTING PIPE
- 22.5 PROPOSED SPOT ELEVATON

LEGEND

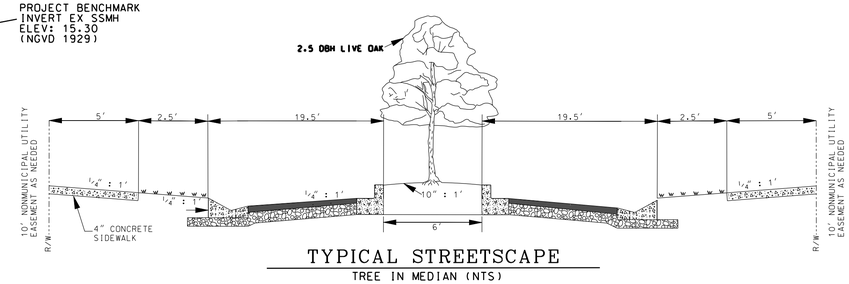

TYPICAL STREETSCAPE
TREE IN MEDIAN (NTS)

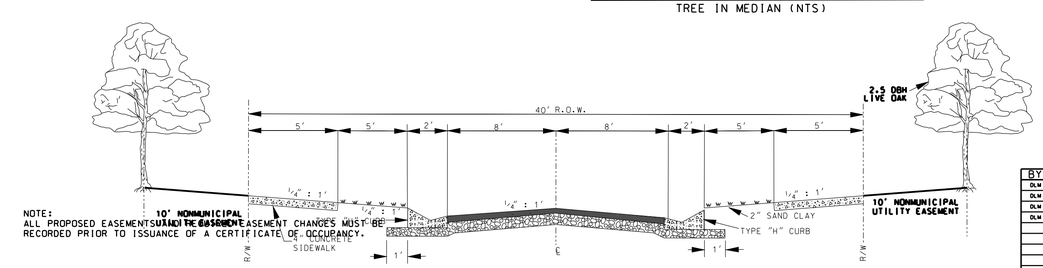

NOTE:
ALL PROPOSED EASEMENTS WITH THE EASEMENT CHANGES MUST BE RECORDED PRIOR TO ISSUANCE OF A CERTIFICATE OF OCCUPANCY.

TYPICAL STREETSCAPE
TREE ON 10' NONMUNICIPAL EASEMENT LINE (NTS)

REVISIONS			
BY	NO.	DATE	DESCRIPTION
DLM	1	9/6/2013	PER CFPUA
DLM	2	9/16/2013	PER CFPUA
DLM	3	11/26/2013	PER CDM SW
DLM	4	1/7/2014	PER CDM SW

LANDSCAPING NOTES:

RESIDENTIAL STREET TREE SPECIES AND PLACEMENT CONFORM TO SD 15-17 OF THE CITY OF WILMINGTON TECHNICAL STANDARDS.

RESIDENTIAL STREET TREES WILL BE LIVE OAK AND MINIMUM 2.5 INCHES DBH.

POND FACILITIES ARE IN ACCORDANCE WITH REQUIREMENTS OUTLINED IN CHAPTER V, SECTION D, PARAGRAPH 4(b), 4(g) AND 4(h) AND STANDARD DETAIL OF SD 15-16 OF THE CITY OF WILMINGTON TECHNICAL STANDARDS.

LANDSCAPE STRIP SHALL BE A MAXIMUM SLOPE OF 7:1 IN ORDER TO PLANT VEGETATION.

PROVIDE A MINIMUM OF 3 INCHES OF MULCH AROUND ALL VEGETATION.

FINAL DESIGN
NOT RELEASED FOR
CONSTRUCTION

NORTH CAROLINA PROFESSIONAL SEAL 35677 ENGINEER DAVID L. MENIUS

DAVID L. MENIUS, P.E.
DATE 1/7/2014

50 0 50 100
GRAPHIC SCALE: 1" = 50'

LANDSCAPE PLAN

Belle Meade Village

WILMINGTON TOWNSHIP NEW HANOVER COUNTY NORTH CAROLINA

OWNER: SHP BELLEMEADE, LLC
ADDRESS: 1442 MILITARY CUTOFF RD. STE 26
WILMINGTON, NC 28403
(910 509-1781

STROUD ENGINEERING, P.A.
C-0647
102-D CINEMA DRIVE
WILMINGTON, NORTH CAROLINA
(910) 815-0775 (910) 815-0593 FAX

DESIGNED:	JHF
DRAWN:	GAG
APPROVED:	JHF
DATE:	8/2/2013
SCALE:	1" = 50'
SHEET	5 OF 12

PROJECT NO.: PW1033
DRAWING NO.: W:/MASTER/PW1033/DGN/EC.DGN

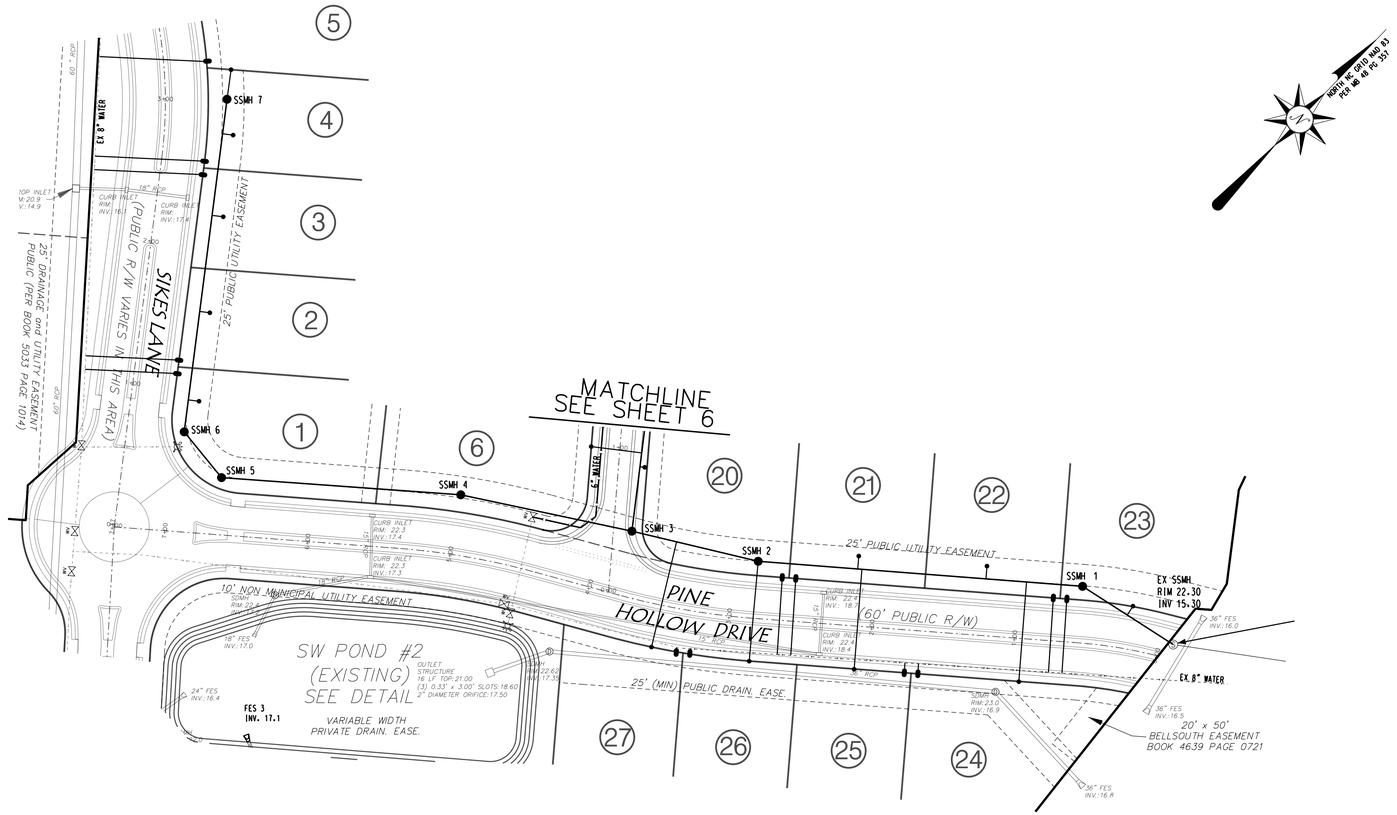

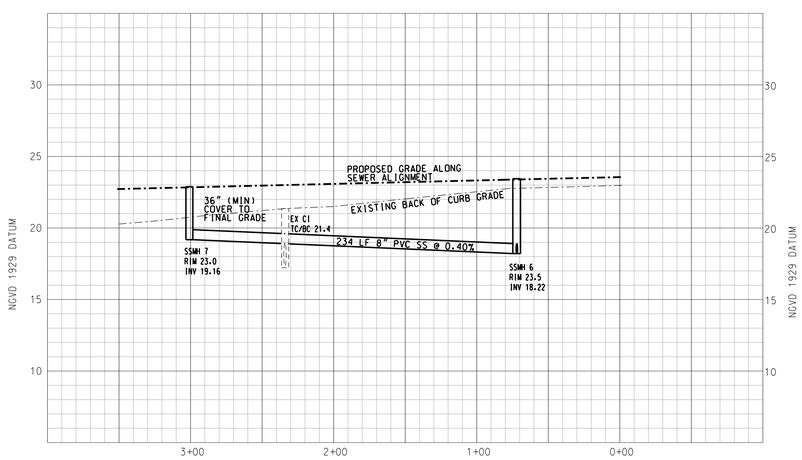

SIKES LANE SEWER PROFILE

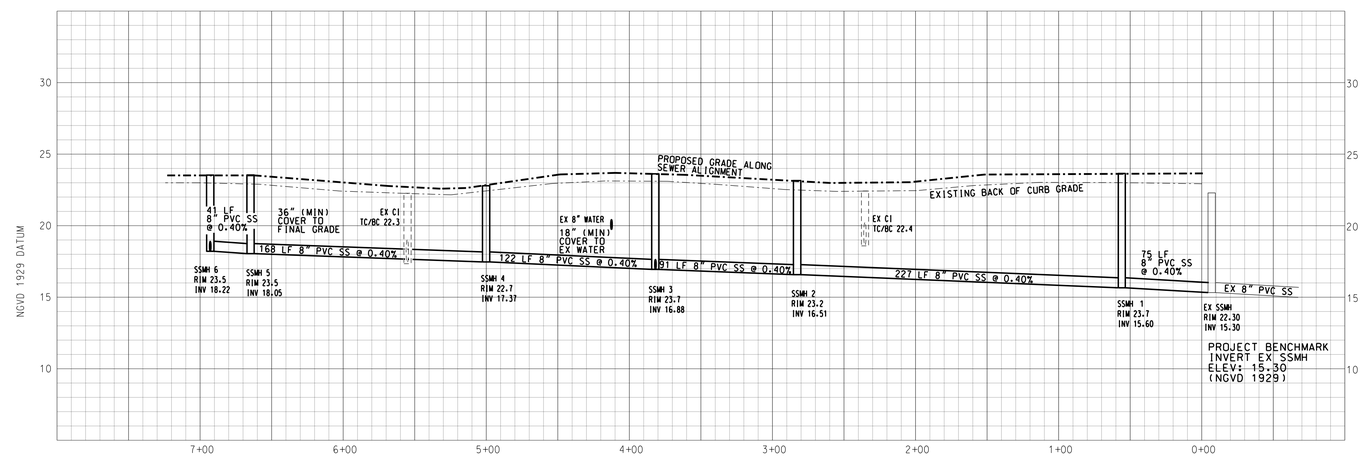

PINE HOLLOW DRIVE SEWER PROFILE

FINAL DESIGN
NOT RELEASED FOR
CONSTRUCTION

NORTH CAROLINA PROFESSIONAL SEAL 35677 ENGINEER DAVID L. MENTUS

DAVID L. MENTUS, P.E.
DATE 1/7/2014

50 0 50 100
GRAPHIC SCALE: 1" = 50'

REVISIONS

BY	NO.	DATE	DESCRIPTION
DLM	1	9/6/2013	PER CFPUA
DLM	2	9/16/2013	PER CFPUA
DLM	3	1/7/2014	PER COW SW

PLAN AND PROFILE

Belle Meade Village

WILMINGTON TOWNSHIP NEW HANOVER COUNTY NORTH CAROLINA

OWNER: SHP BELLEMEADE, LLC
ADDRESS: 1442 MILITARY CUTOFF RD. STE 26
WILMINGTON, NC 28403
(910 509-1781

STROUD ENGINEERING, P.A.
C-0647
102-D CINEMA DRIVE
WILMINGTON, NORTH CAROLINA
(910) 815-0775 (910) 815-0593 FAX

DESIGNED: JHF
DRAWN: GAG
APPROVED: JHF
DATE: 8/2/2013
SCALE: VERT 1"=5' HOR 1"=50'
SHEET 6 OF 12

PROJECT NO.: PW1033
DRAWING NO.: W:/MASTER/PW1033/DGN/EC.DGN

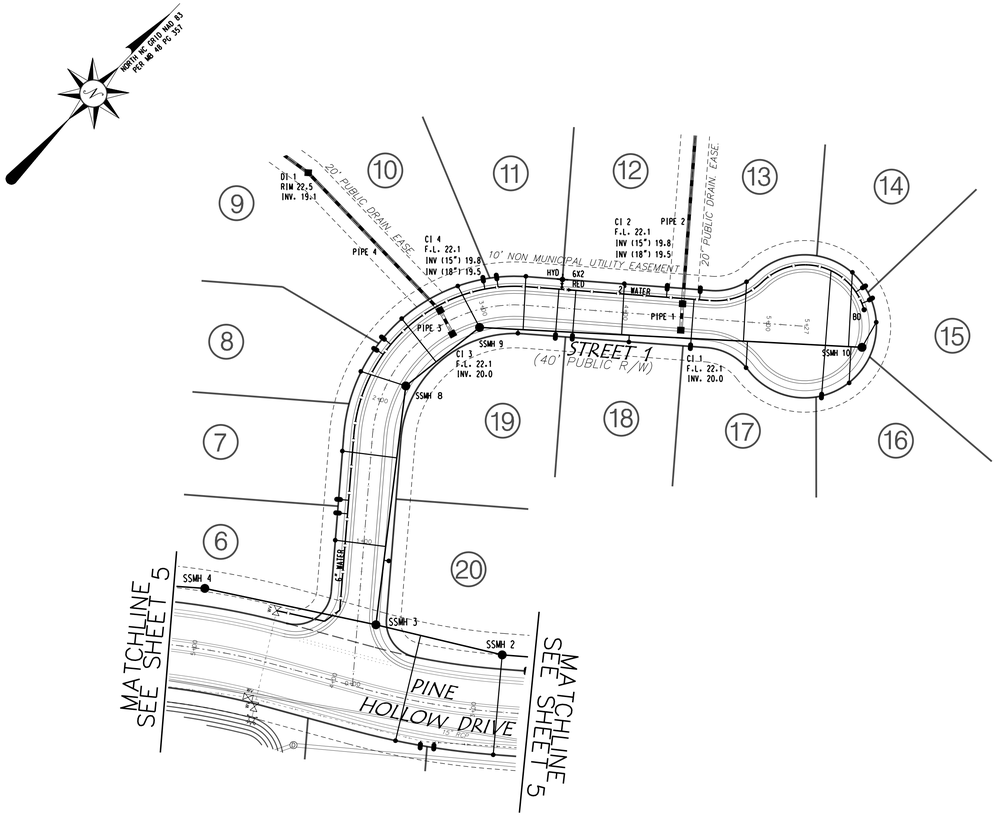

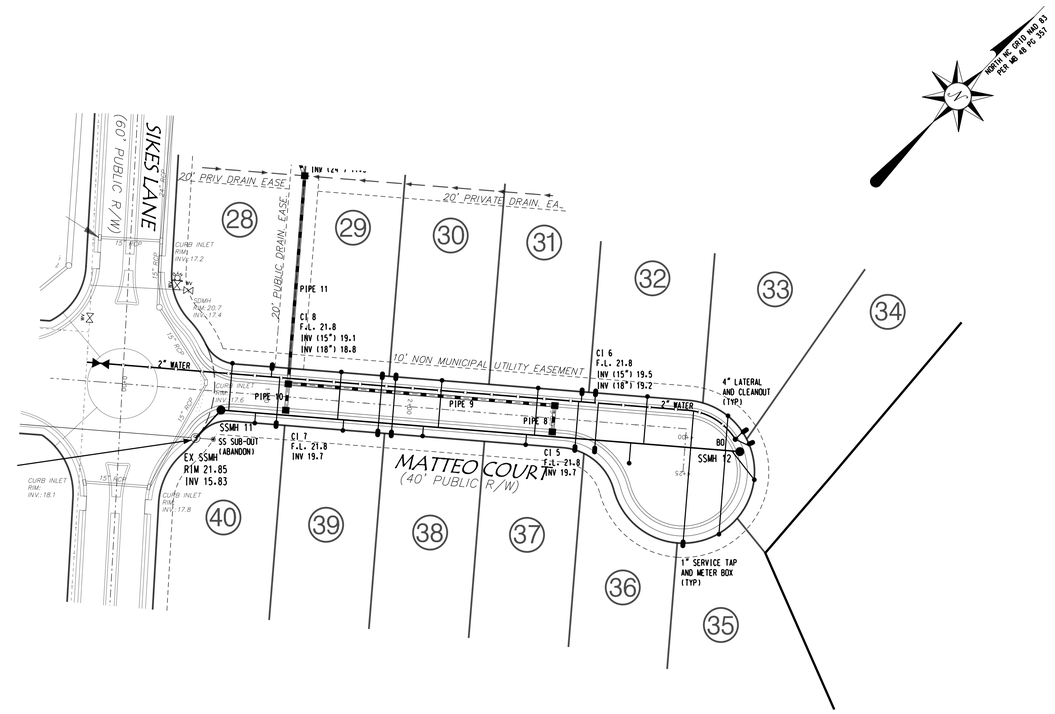

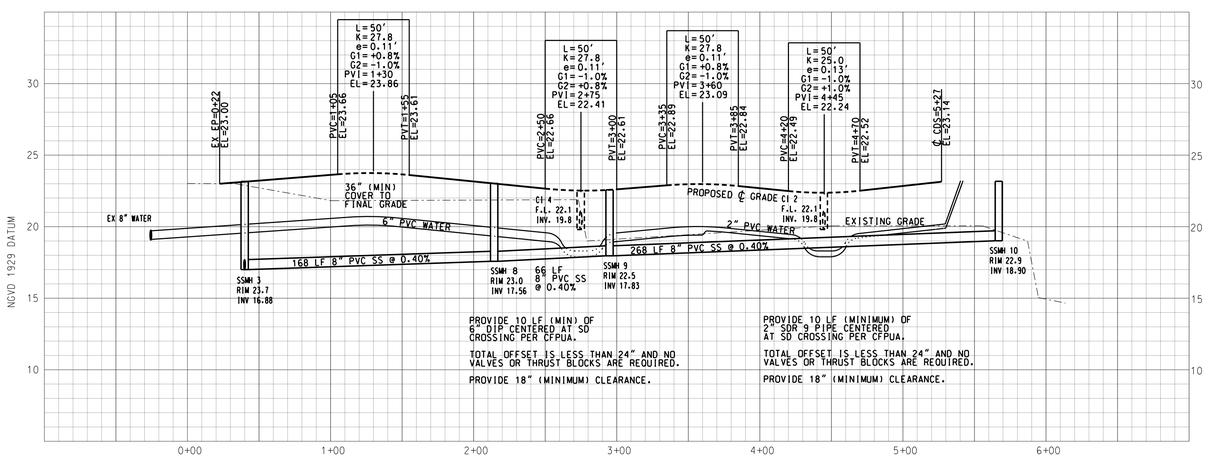

STREET 1 PROFILE

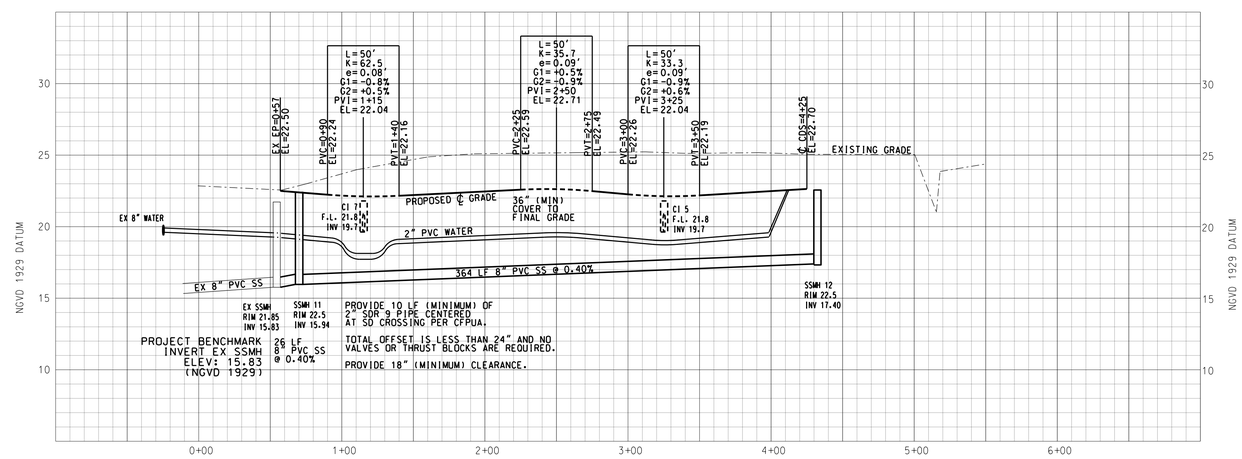

STREET 2 PROFILE

FINAL DESIGN
NOT RELEASED FOR
CONSTRUCTION

50 0 50 100

GRAPHIC SCALE: 1" = 50'

NORTH CAROLINA PROFESSIONAL SEAL 35677 ENGINEER DAVID L. MENTUS

DAVID L. MENTUS, P.E.
DATE 1/7/2014

REVISIONS

BY	NO.	DATE	DESCRIPTION
DLM	1	9/6/2013	PER CFPUA
DLM	2	9/16/2013	PER CFPUA
DLM	3	9/26/2013	PER CFPUA
DLM	4	1/7/2014	PER CDM SW

PLAN AND PROFILE

Belle Meade Village

WILMINGTON TOWNSHIP NEW HANOVER COUNTY NORTH CAROLINA

OWNER: SHP BELLEMEADE, LLC

ADDRESS: 1442 MILITARY CUTOFF RD. STE 26
WILMINGTON, NC 28403
(910 509-1781

STROUD ENGINEERING, P.A.
C-0647
102-D CINEMA DRIVE
WILMINGTON, NORTH CAROLINA
(910) 815-0775 (910) 815-0593 FAX

DESIGNED: JHF
DRAWN: GAG
APPROVED: JHF
DATE: 8/2/2013
SCALE: VERT 1"=5' HOR 1"=50'
SHEET 7 OF 12

PROJECT NO.: PW1033
DRAWING NO.: W:/MASTER/PW1033/DGN/EC.DGN

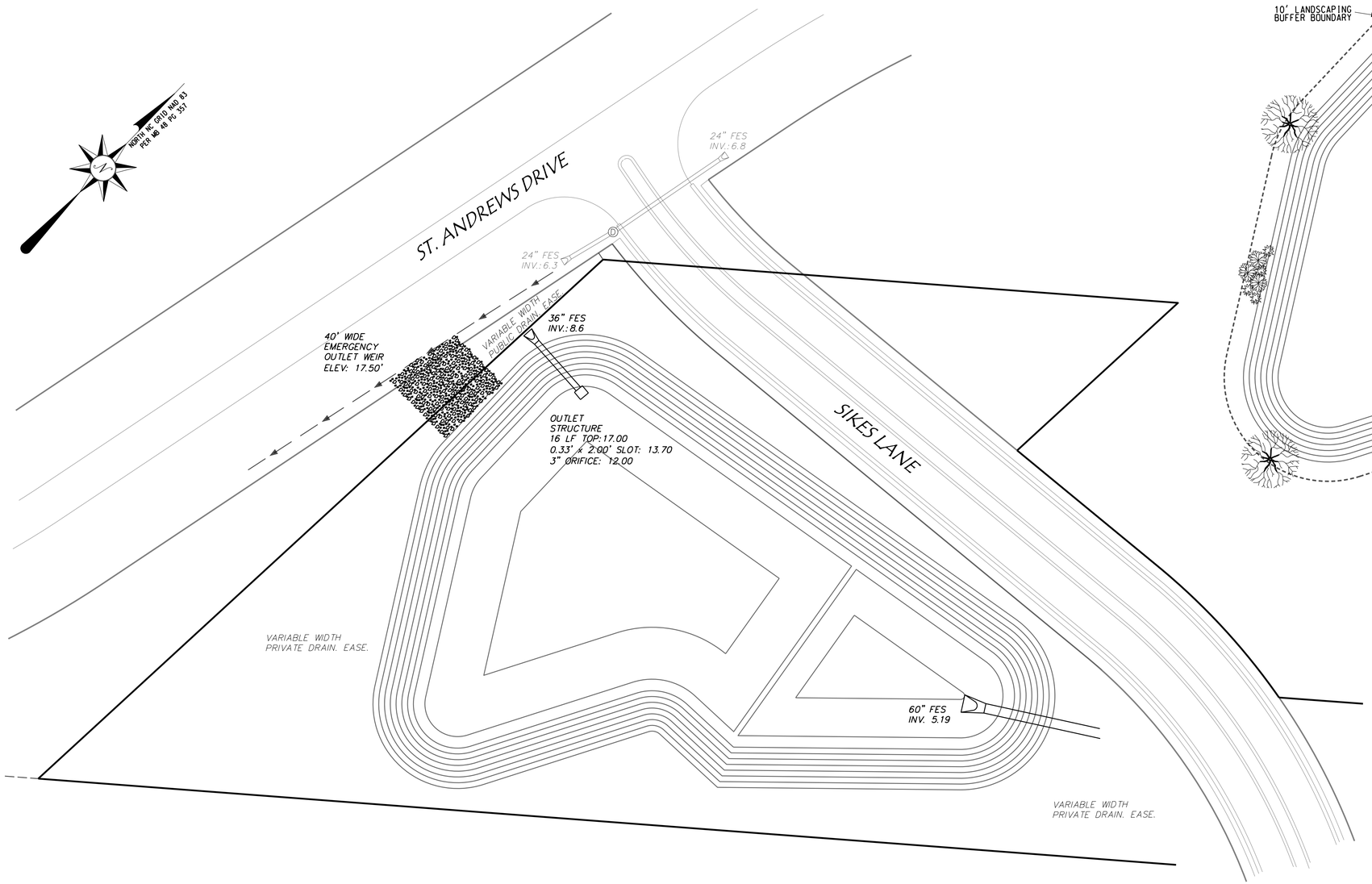

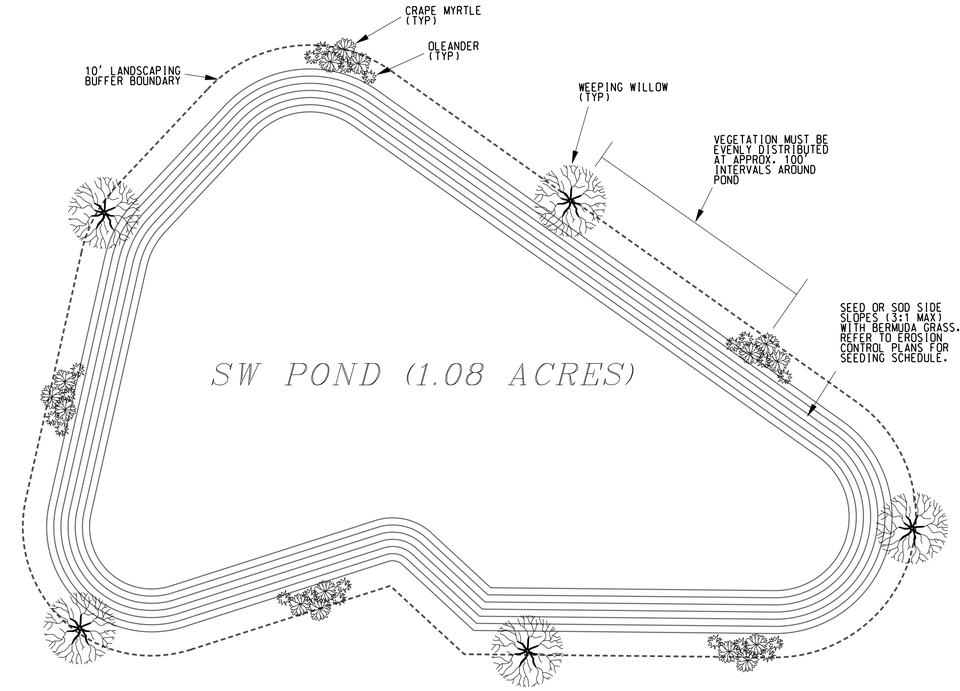

POND LANDSCAPING PLAN

LANDSCAPING NOTES:

RESIDENTIAL STREET TREE SPECIES AND PLACEMENT CONFORM TO SD 15-17 OF THE CITY OF WILMINGTON TECHNICAL STANDARDS.

RESIDENTIAL STREET TREES WILL BE LIVE OAK AND MINIMUM 2.5 INCHES DBH.

POND FACILITIES ARE IN ACCORDANCE WITH REQUIREMENTS OUTLINED IN CHAPTER V, SECTION D, PARAGRAPH 4(b), 4(g) AND 4(h) AND STANDARD DETAIL OF SD 15-16 OF THE CITY OF WILMINGTON TECHNICAL STANDARDS.

LANDSCAPE STRIP SHALL BE A MAXIMUM SLOPE OF 7:1 IN ORDER TO PLANT VEGETATION.

PROVIDE A MINIMUM OF 3 INCHES OF MULCH AROUND ALL VEGETATION.

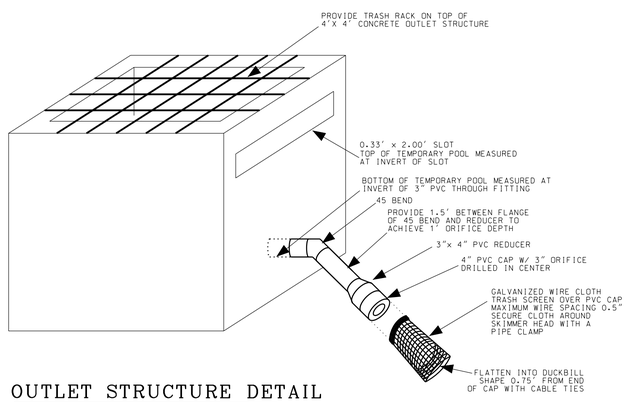

OUTLET STRUCTURE DETAIL

N.T.S.

PROVIDE GROUNDCOVER PER SEEDING SCHEDULE ABOVE 10' VEGETATED SHELF REFER TO EROSION & SEDIMENT CONTROL CONSTRUCTION AND MAINTENANCE SPECIFICATIONS

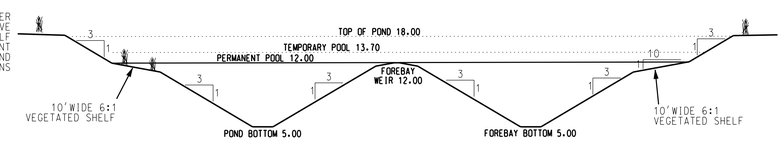

TABLE OF DIMENSIONS

TOP OF BANK-	18.00
EMERGENCY OUTLET-	17.50
TOP OF BOX-	17.00
DENR TEMP POOL-	13.70
PERMANENT POOL-	12.00
BOTTOM FOREBAY-	5.00
BOTTOM POND-	5.00

POND PROFILE

N.T.S.

GRAPHIC SCALE: 1" = 30'

FINAL DESIGN
NOT RELEASED FOR
CONSTRUCTION

NORTH CAROLINA PROFESSIONAL SEAL 35677 ENGINEER DAVID L. MENDLIS

DAVID L. MENDLIS, P.E.
DATE 4/7/2014

REVISIONS

BY	NO.	DATE	DESCRIPTION
DLM	1	9/6/2013	PER CFPUA
DLM	2	9/16/2013	PER CFPUA
DLM	3	11/26/2013	PER COW SW
DLM	4	1/17/2014	PER COW SW

STORMWATER POND #1 DETAIL

Belle Meade Village

WILMINGTON TOWNSHIP NEW HANOVER COUNTY NORTH CAROLINA

OWNER: SHP BELLEMEADE, LLC
ADDRESS: 1442 MILITARY CUTOFF RD. STE 26
WILMINGTON, NC 28403
(910 509-1781

STROUD ENGINEERING, P.A. C-0647
102-D CINEMA DRIVE
WILMINGTON, NORTH CAROLINA
(910) 815-0775 (910) 815-0593 FAX

DESIGNED: JHF
DRAWN: GAG
APPROVED: JHF
DATE: 8/2/2013
SCALE: 1" = 30'
SHEET 8 OF 12

PROJECT NO.: PW1033
DRAWING NO.: W:/MASTER/PW1033/DGN/EC.DGN

LANDSCAPING NOTES:

RESIDENTIAL STREET TREE SPECIES AND PLACEMENT CONFORM TO SD 15-17 OF THE CITY OF WILMINGTON TECHNICAL STANDARDS.

RESIDENTIAL STREET TREES WILL BE LIVE OAK AND MINIMUM 2.5 INCHES DBH.

POND FACILITIES ARE IN ACCORDANCE WITH REQUIREMENTS OUTLINED IN CHAPTER V, SECTION D, PARAGRAPH 4(b), 4(g) AND 4(h) AND STANDARD DETAIL OF SD 15-16 OF THE CITY OF WILMINGTON TECHNICAL STANDARDS.

LANDSCAPE STRIP SHALL BE A MAXIMUM SLOPE OF 7:1 IN ORDER TO PLANT VEGETATION.

PROVIDE A MINIMUM OF 3 INCHES OF MULCH AROUND ALL VEGETATION.

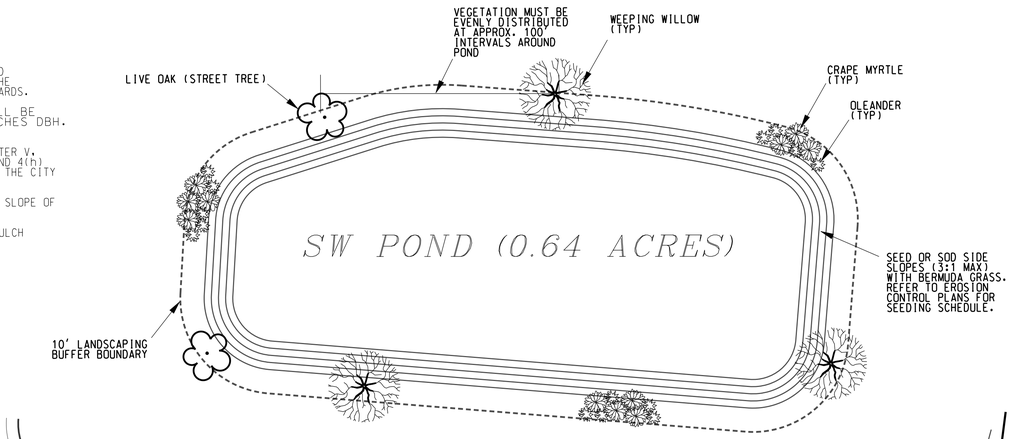

POND LANDSCAPING PLAN

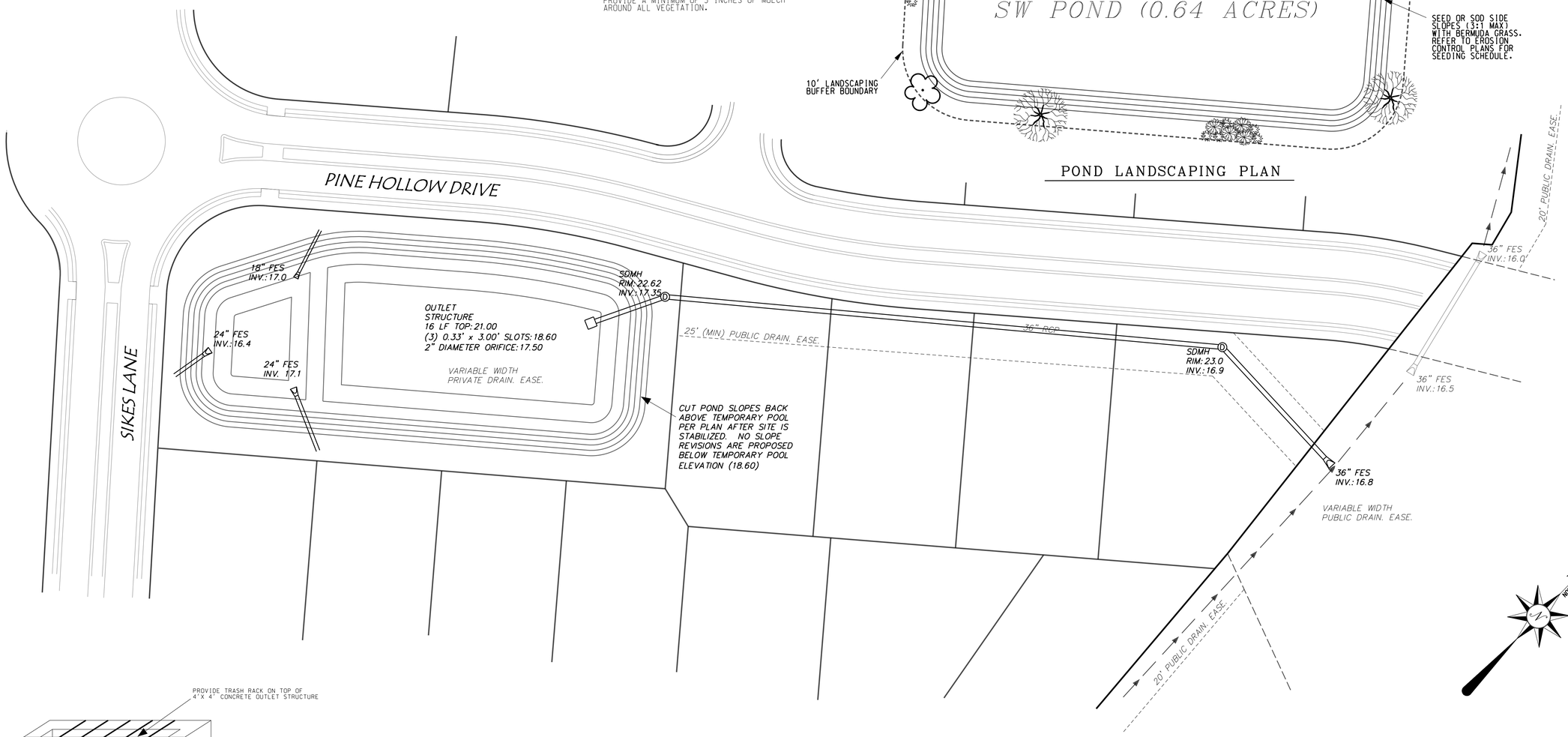

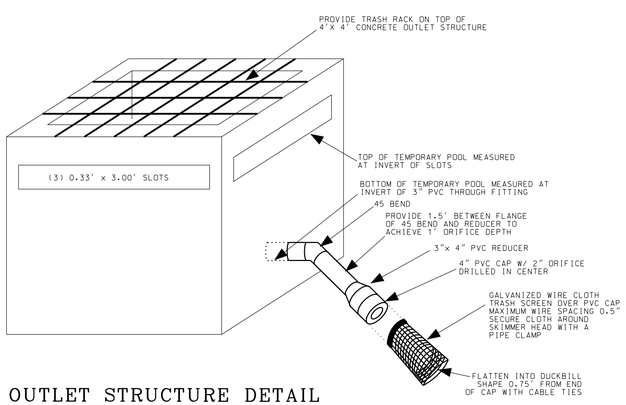

OUTLET STRUCTURE DETAIL

N.T.S.

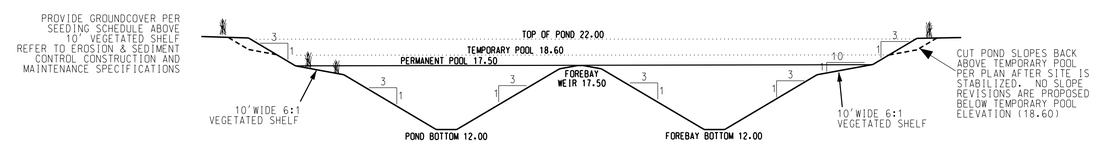

TABLE OF DIMENSIONS

TOP OF BANK-22.00
EMERGENCY OUTLET/TOP OF BOX-21.00
DENR TEMP POOL-18.60
PERMANENT POOL-17.50
BOTTOM FOREBAY-12.00
BOTTOM POND-12.00

POND PROFILE

N.T.S.

FINAL DESIGN NOT RELEASED FOR CONSTRUCTION

NORTH CAROLINA PROFESSIONAL SEAL 35677 ENGINEER DAVID L. MENTUS

DAVID L. MENTUS, P.E.
DATE 1/7/2014

30 0 30 60

GRAPHIC SCALE: 1" = 30'

REVISIONS

BY	NO.	DATE	DESCRIPTION
DLM	1	9/6/2013	PER CFPUA
DLM	2	9/16/2013	PER CFPUA
DLM	3	11/26/2013	PER COW SW
DLM	4	1/7/2014	PER COW SW

STORMWATER POND #2 DETAIL

Belle Meade Village

WILMINGTON TOWNSHIP NEW HANOVER COUNTY NORTH CAROLINA

OWNER: SHP BELLEMEADE, LLC

ADDRESS: 1442 MILITARY CUTOFF RD. STE 26
WILMINGTON, NC 28403
(910 509-1781

STROUD ENGINEERING, P.A.
C-0647
102-D CINEMA DRIVE
WILMINGTON, NORTH CAROLINA
(910) 815-0775 (910) 815-0593 FAX

DESIGNED: JHF
DRAWN: GAG
APPROVED: JHF
DATE: 8/2/2013
SCALE: 1" = 30'
SHEET 9 OF 12

PROJECT NO.: PW1033

DRAWING NO.: W:/MASTER/PW1033/DGN/EC.DGN

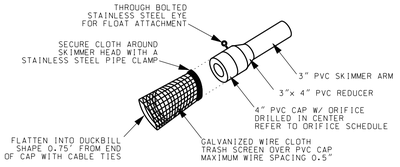

SKIMMER HEAD DETAIL

NTS

ORIFICE SCHEDULE	
BASIN	DIAMETER
1	2.25"
2	1.25"

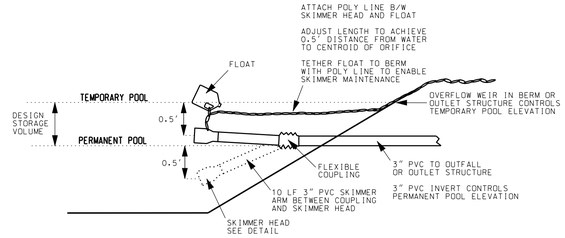

SKIMMER ASSEMBLY DETAIL

NTS

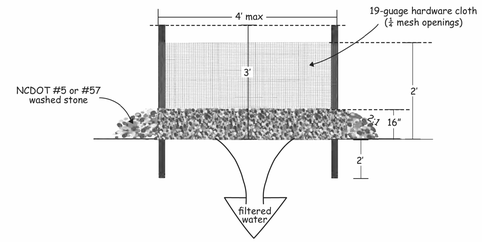

TYPICAL INLET PROTECTION

NTS

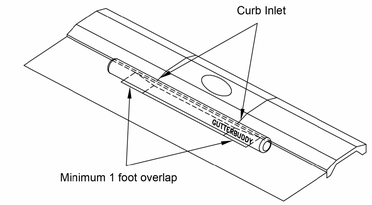

GUTTERBUDDY INLET PROTECTION

NTS

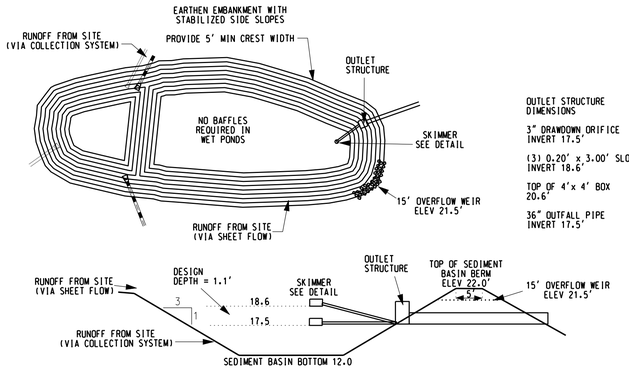

OUTLET STRUCTURE DIMENSIONS

3" DRAWDOWN ORIFICE INVERT 17.5'

(3) 0.20' x 3.00' SLOTS INVERT 18.6'

TOP OF 4'x 4' BOX 20.6'

36" OUTFALL PIPE INVERT 17.5'

SEDIMENT BASIN 1 DETAIL

NTS

NOTE:
RETROFIT POND PER STORMWATER DETAILS ONCE SITE IS STABILIZED.

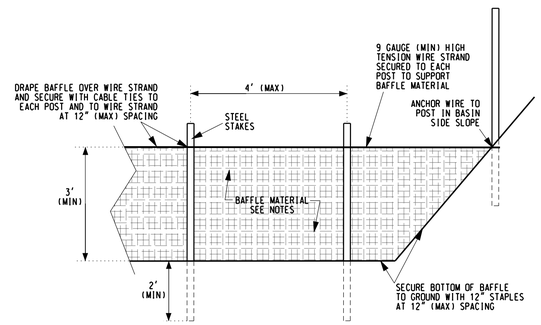

BAFFLE DETAIL

NTS

COIR BAFFLE MATERIAL PROPERTY REQUIREMENTS	
THICKNESS	0.50 IN (MIN)
TENSILE STRENGTH (WET)	900 x 680 LB/FT (MIN)
ELONGATION (WET)	69% x 34% (MAX)
FLOW VELOCITY	10-12 FT/SEC
WEIGHT	20 OZ/SY (MIN)
MINIMUM WIDTH	6.5 FT
OPEN AREA	50% (MAX)

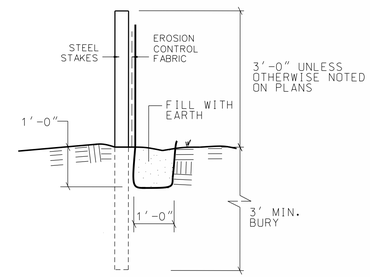

TYPICAL SILT FENCE

NTS

NOTE: POSTS TO BE SPACED 6 FT O.C. OR 8 FT O.C.
W/ 14 GAUGE 6 X 6 WIRE MESH REINFORCEMENT.
WOODEN POSTS ARE NOT ACCEPTABLE

EROSION & SEDIMENT CONTROL MAINTENANCE PLAN

1. ALL EROSION AND SEDIMENTATION CONTROL MEASURES WILL BE CHECKED FOR STABILITY AND OPERATION FOLLOWING EVERY RUNOFF-PRODUCING RAINFALL BUT IN NO CASE LESS THAN ONCE EVERY WEEK AND WITHIN 24 HOURS OF EVERY HALF INCH RAINFALL.

2. ALL POINTS OF EGRESS WILL HAVE CONSTRUCTIONS ENTRANCES THAT WILL BE PERIODICALLY TOP-DRESSED WITH AN ADDITIONAL 2" OF #4 STONE TO MAINTAIN PROPER DEPTH. THEY WILL BE MAINTAINED IN A CONDITION TO PREVENT MUD OR SEDIMENT FROM LEAVING THE SITE. IMMEDIATELY REMOVE OBJECTIONABLE MATERIAL SPILLED, WASHED, OR TRACKED ONTO THE CONSTRUCTION ENTRANCE OR ROADWAYS.

3. SEDIMENT WILL BE REMOVED FROM HARDWARE CLOTH AND GRAVEL INLET PROTECTION, BLOCK AND GRAVEL INLET PROTECTION, ROCK DOUGHNUT INLET PROTECTION, ROCK PIPE INLET PROTECTION, AND GUTTERBUDDY INLET PROTECTOIN WHEN THE DESIGNED STORAGE CAPACITY HAS BEEN HALF FILLED WITH SEDIMENT. ROCK WILL BE CLEANED OR REPLACED WHEN THE SEDIMENT POOL NO LONGER DRAINS AS DESIGNED. DEBRIS WILL BE REMOVED FROM THE ROCK AND HARWARE CLOTH TO ALLOW PROPER DRAINAGE. SILT SACKS WILL BE EMPTIED ONCE A WEEK AND AFTER EVERY RAIN EVENT. SEDIMENT WILL BE REMOVED FROM AROUND BEAVER DAMS, DANDY SACKS/SOCKS, AND GUTTERBUDDIES ONCE A WEEK AND AFTER EVERY RAIN EVENT. NOTE THAT THE GUTTERBUDDY IS REUSABLE SHOULD BE STORED OUT OF DIRECT SUNLIGHT BETWEEN JOBS.

4. DIVERSION DITCHES WILL BE CLEANED OUT IMMEDIATLEY TO REMOVE SEDIMENT OR OBSTRUCTIONS FROM THE FLOW AREA. THE DIVERSION RIDGES WILL ALSO BE REPAIRED. SWALES MUST BE RESTABLIZED WITHIN 21 CALENDAR DAYS OF CEASE OF ANY PHASE OF PHASE OF ACTIVITY ASSOCIATED WITH A SWALE.

5. SEDIMENT WILL BE REMOVED FROM BEHIND THE SEDIMENT FENCE WHEN IT BECOMES HALF FILLED. THE SEDIMENT FENCE WILL BE REPAIRED AS NECESSARY TO MAINTAIN A BARRIER. STAKES MUST BE STEEL. STAKE SPACING WILL BE 6 FEET (MAX) WITH THE USE OF EXTRA STRENGHT FABRIC WITHOUT WIRE BACKING. STAKE SPACING WILL BE 8 FEET (MAX) WHEN STANDARD STRENGTH FABRIC AND WIRE BACKING ARE USED. IF ROCK FILTERS ARE USED AT LOW POINTS IN THE SEDIMENT FENCE, THE ROCK WILL BE REPAIRED OR REPLACED IF IT BECOMES HALF FULL OF SEDIMENT, NO LONGER DRAINS AS DESIGNED, OR IS DAMAGED.

6. SEDIMENT WILL BE REMOVED FROM SEDIMENT TRAPS WHEN THE DESIGNED STORAGE CAPACITY HAS BEEN HALF FILLED WITH SEDIMENT. THE ROCK WILL BE CLEANED OR REPLACED WHEN THE SEDIMENT POOL NO LONGER DRAINS OR WHEN THE ROCK IS DISLODGED. BAFFLES WILL BE REPAIRED OR REPLACED IF THEY COLLAPSE, TEAR, DECOMPOSE, OR BECOME INEFFECTIVE. THEY WILL BE REPLACED PROMPTLY. SEDIMENT WILL BE REMOVED WHEN DEPOSITS REACH HALF THE HEIGHT OF THE FIRST BAFFLE. IF APPLICABLE, FLOATING SKIMMERS WILL BE INSPECTED WEEKLY AND WILL BE KEPT CLEAN.

7. SEDIMENT WILL BE REMOVED FROM THE SEDIMENT BASIN WHEN THE DESIGNED STORAGE CAPACITY HAS BEEN HALF FILLED WITH SEDIMENT. ROCK WILL BE CLEANED OR REPLACED WHEN THE SEDIMENT POOL NO LONGER DRAINS OR WHEN THE ROCK IS DISLODGED. BAFFLES WILL BE REPAIRED OR REPLACED IF THEY COLLAPSE, TEAR, DECOMPOSE, OR BECOME INEFFECTIVE. THEY WILL BE REPLACED PROMPTLY. SEDIMENT WILL BE REMOVED WHEN DEPOSITS REACH HALF THE HEIGHT OF THE FIRST BAFFLE. FLOATING SKIMMERS WILL BE INSPECTED WEEKLY AND WILL BE KEPT CLEAN.

8. ALL SEEDED AREAS WILL BE FERTILIZED, RESEEDED AS NECESSARY, AND MULCHED ACCORDING TO SPECIFICATIONS IN THE VEGETATIVE PLAN TO MAINTAIN A VIGOROUS, DENSE VEGETATIVE COVER. ALL SLOPES WILL BE SLABILIZED WITHIN 21 CALENDAR DAYS. ALL OTHER AREAS WILL BE STABILIZED WITHIN 15 WORKING DAYS.

9. FLOCCULANTS WILL BE USED TO ADDRESS TURBIDITY ISSUES. THE PUMPS, TANKS, HOSES AND INJECTION SYSTEMS WILL BE CHECKED FOR PROBLEMS OR TURBID DISCHARGES DAILY.

COASTAL PLAIN SITE STABILIZATION SCHEDULE

1. Fertilize and lime per recommendations of soil tests or apply 2,000 lb/acre ground agricultural limestone and 750 lb/acre 10-10-10 fertilizer.
2. Incorporate lime/fertilizer 4-6 inches.
3. Roughen steep slopes by tracked machinary.
4. Select species based on season. Refer to tables.
5. Broadcast seeds evenly and cover by raking or dragging a chain. Firm soil by rolling.
6. Apply straw mulch at a rate 1-2 tons per acre. Anchor straw by tacking with asphalt, netting, or a mulch anchoring tool.
   A disk with blades set nearly straight can be used as a mulch anchoring tool.
7. Refertilize if growth is not fully adequate. Reseed, refertilize and mulch immediately following erosion or other damage.

PERMANENT SEEDING TABLE 1

Seeding Dates	Recommended Planting	Rate (lb/ac)
Feb. 15 - Apr. 1 Sep. 1 - Nov. 1	Tall Fescue Mixture	see table 2
Apr. 1 - Aug. 1	Hybrid Bermudagrass	see table 2
Apr. 1 - Jul. 15	Common Bermudagrass	see table 2
Mar. 1 - Jul. 1	Centipedegrass	see table 2

PERMANENT SEEDING TABLE 2a-LOW MAINTENANCE MIXTURES

Site Description	Recommended Planting	Rate (lb/ac)
Well to poorly drained soils	Tall Fescue Mixture Pensacola Bahiagrass Kobe Lespedeza	80 50 40
Dry to well drained soils	Pensacola Bahiagrass Common Bermudagrass Kobe Lespedeza German Millet	50 30 10 10
Swales	Common Bermudagrass	40-80

PERMANENT SEEDING TABLE 2b-HIGH MAINTENANCE MIXTURES

Site Description	Recommended Planting	Rate (lb/ac)
Well to poorly drained soils	Tall Fescue Mixture Rye Grain	200 25
Dry to well drained soils	Hybrid Bermudagrass	50
Well drained sandy loam to sand, lawns.	Centipedegrass	10-20

Notes:
For seeding outside of recommended dates and/or for temporary stabilization, refer to temporary seeding table.

For highly erosive areas or as directed by an engineer, sod shall be provided.

TEMPORARY SEEDING TABLE

Seeding Dates	Recommended Planting	Rate (lb/ac)
Dec. 1 - Apr. 15	Kobe Lespedeza with Rye Grain	50 120
Apr. 15 - Aug. 15	German Millet	40
Aug. 15 - Dec. 1	Rye Grain	120

SOD INSTALLATION

1. Fertilize and lime per recommendations of soil tests or apply 100 lb/1,000 sf ground agricultural limestone and 25 lb/1,000 sf fertilizer. In the fall, use 10-10-10. In the spring, use 5-10-10.
2. Incorporate lime/fertilizer 4-6 inches.
3. Rake or harrow to achieve a smooth final grade.
4. Roll to achieve a smooth, firm surface on which to lay the sod.
5. Lightly rake and irrigate top layer of soil just prior to installation.
6. Lay sod in a staggered, brick-like pattern with the longest dimension perpendicular to the slope. Avoid gaps. Use a knife to fit irregular shapes.
7. Roll sod lightly after installation to ensure good sod to soil contact.
8. Irrigate initially to wet soil to a depth of 4". Keep soil moist for 2-3 weeks thereafter or until sod has taken root.

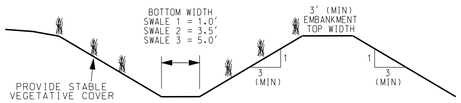

SWALE DETAIL

NTS

NOTES:

THE MAXIMUM 10 YEAR STORM FLOW VELOCITY IS 4 FPS.

MAXIMUM SIDE SLOPES OF SWALES SHALL BE 3:1.

SWALES AND OTHER AREAS SUBJECT TO EROSIVE FLOWS SHALL BE PERMANENTLY SEEDED OR SODDED WITH BERMUDAGRASS OR APPROVED EQUAL IN ACCORDANCE WITH STABILIZATION SCHEDULE FOUND IN EROSION & SEDIMENT CONTROL CONSTRUCTION AND MAINTENANCE SPECIFICATIONS.

EITHER SOD OR TEMPORARY SEEDING SHALL BE PROVIDED FOR STABILIZATION OUTSIDE OF THE RECOMMENDED PERMANENT SEEDING DATES.

SWALE #2 FEATURES AN EMBANKMENT. REFER TO CROSS SECTION.

THE 10 YEAR STORM FLOW DEPTH OF SWALE #2 IS 0.78 FEET. SWALE #2 DEPTH SHALL BE 1.78 FEET.

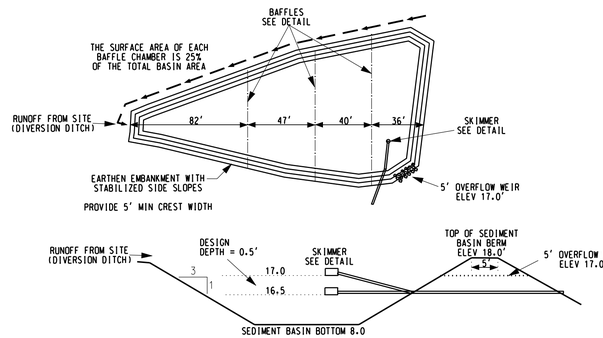

SEDIMENT BASIN 2 DETAIL

NTS

NOTE:
DEWATER, DE-MUCK AND FILL POND ONCE SITE IS STABILIZED.

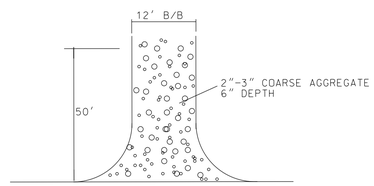

CONSTRUCTION ENTRANCE DETAIL

NTS

NPDES STABILIZATION TIMEFRAMES		
SITE AREA DESCRIPTION	STABILIZATION	TIMEFRAME EXCEPTIONS
PERIMETER DIKES, SWALES, AND DITCHES	7 DAYS	NONE
HIGH QUALITY WATER (HQW) ZONES	7 DAYS	NONE
SLOPES STEEPER THAN 3:1	7 DAYS	IF SLOPES ARE 10' OR LESS IN LENGTH AND FLATTER THAN 2:1 THEN 14 DAYS ARE ALLOWED.
SLOPES 3:1 OR FLATTER	14 DAYS	7 DAYS FOR SLOPES GREATER THAN 50' IN LENGTH.
OTHER AREAS WITH SLOPES FLATTER THAN 4:1	14 DAYS	NONE

CONSTRUCTION SEQUENCE

1. INSTALL INLET PROTECTION, SILT FENCE, AND STONE CONSTRUCTION ENTRANCES.
2. CLEAR & GRADE
3. INSTALL UNDERGROUND UTILITIES
4. INSTALL PAVEMENT
5. PROVIDE 100% VEGETATIVE COVER OF ALL DISTURBED SOILS.
6. CLEAN SEDIMENT FROM PIPES AFTER STABILIZATION.

NOTE:
NO WETLANDS EXIST IN DISTURBED PORTIONS OF SITE.

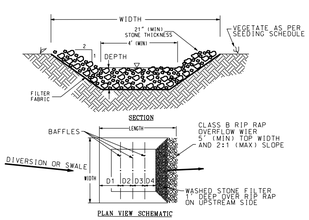

SEDIMENT TRAP DETAIL

NTS

SEDIMENT TRAP SCHEDULE				
TST	LENGTH	WIDTH	DEPTH	BATTEN SPACING
ALL	60'	20'	4.0'	15'/15'/15'/15'

NOTE:

PROVIDE (3) BAFFLES ACROSS WIDTH OF TRAP SPACED PER THE SCHEDULE OF DIMENSIONS.

REFER TO BAFFLE DETAILS

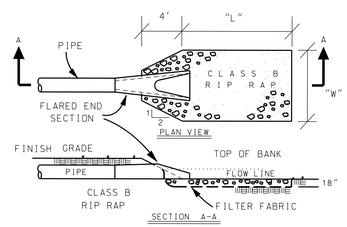

FILTER FABRIC TO BE TREVIRA SPUNBOUND TYPE 11/120

RIP RAP APRONS SHALL BE PROVIDED ON DOWNSTREAM ENDS OF CULVERT FLARED END SECTIONS

RIP RAP APRON DETAIL

NTS

RIP RAP APRON SCHEDULE		
PIPE	LENGTH	WIDTH
15"	7.5'	3.8'
18"	9.0'	4.5'
24"	12.0'	6.0'
30"	15.0'	7.5'
36"	18.0'	9.0'

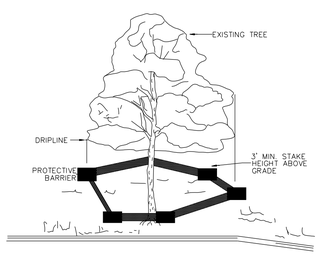

TREE PROTECTION

NTS

SEE SEPARATE CFPUA DETAIL SHEETS FOR WATER AND SEWER SYSTEM DETAILS

FINAL DESIGN
NOT RELEASED FOR
CONSTRUCTION

NORTH CAROLINA PROFESSIONAL SEAL 35677 ENGINEER DAVID L. MENDIS

DAVID L. MENDIS, P.E.
DATE 1/7/2014

REVISIONS

BY	NO.	DATE	DESCRIPTION
DLM	1	11/26/2013	PER CDM SW
DLM	2	1/7/2014	PER CDM SW

DETAILS

Belle Meade Village

WILMINGTON TOWNSHIP NEW HANOVER COUNTY NORTH CAROLINA

OWNER: SHP BELLEMEADE, LLC

ADDRESS: 1442 MILITARY CUTOFF RD, STE 26
WILMINGTON, NC 28403
(910 509-1781

STROUD ENGINEERING, P.A. C-0647
102-D CINEMA DRIVE
WILMINGTON, NORTH CAROLINA
(910) 815-0775 (910) 815-0593 FAX

DESIGNED:	JHF
DRAWN:	GAG
APPROVED:	JHF
DATE:	8/2/2013
SCALE:	AS NOTED
SHEET 10 OF	12

PROJECT NO.: PW1033

DRAWING NO.: W:/MASTER/PW1033/DGN/EC.DGN

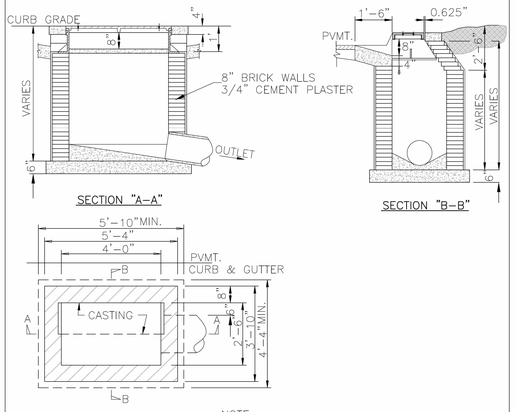

NOTE:
1. 4" DEEP X 8" WIDE CONCRETE COPING ALL AROUND BASIN CASTING.
2. ALL CONCRETE TO BE CLASS "A"
3. FOR CASTING DETAIL SEE SD 2-16

	STANDARD DETAIL	CITY OF WILMINGTON NORTH CAROLINA
DATE: 2006	CATCH BASIN	CITY OF WILMINGTON ENGINEERING PO BOX 1810 WILMINGTON, NC 28402 (910) 341-7807
DRAWN BY JSR/CMR		
CHECKED BY B.P., P.E.		
SCALE NOT TO SCALE		SD 2-01

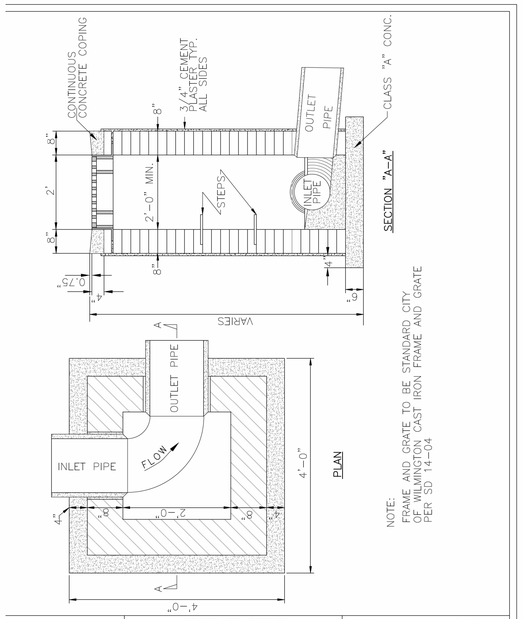

NOTE:
FRAME AND GRATE TO BE STANDARD CITY OF WILMINGTON CAST IRON FRAME AND GRATE PER SD 14-04

	STANDARD DETAIL	CITY OF WILMINGTON NORTH CAROLINA
DATE: 2001	GRILL BASIN	CITY OF WILMINGTON ENGINEERING PO BOX 1810 WILMINGTON, NC 28402 (910) 341-7807
DRAWN BY JSR		
CHECKED BY B.P., P.E.		
SCALE NOT TO SCALE		SD 2-02

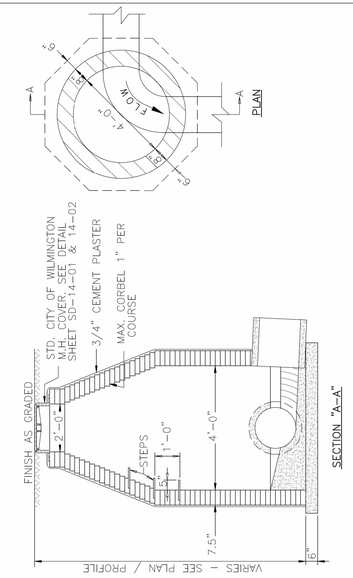

	STANDARD DETAIL	CITY OF WILMINGTON NORTH CAROLINA
DATE: 2001	GUIDELINES FOR STORM DRAIN MANHOLE	CITY OF WILMINGTON ENGINEERING PO BOX 1810 WILMINGTON, NC 28402 (910) 341-7807
DRAWN BY JSR/CMR		
CHECKED BY B.P., P.E.		
SCALE NOT TO SCALE		SD 2-03

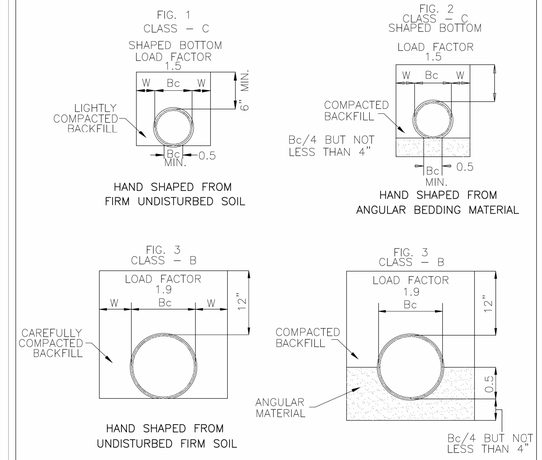

	STANDARD DETAIL	CITY OF WILMINGTON NORTH CAROLINA
DATE: 2001	GUIDELINES FOR BEDDING DETAILS, STORM SEWER CLASSES (B & C)	CITY OF WILMINGTON ENGINEERING PO BOX 1810 WILMINGTON, NC 28402 (910) 341-7807
DRAWN BY JSR/CMR		
CHECKED BY B.P., P.E.		
SCALE NOT TO SCALE		SD 2-17

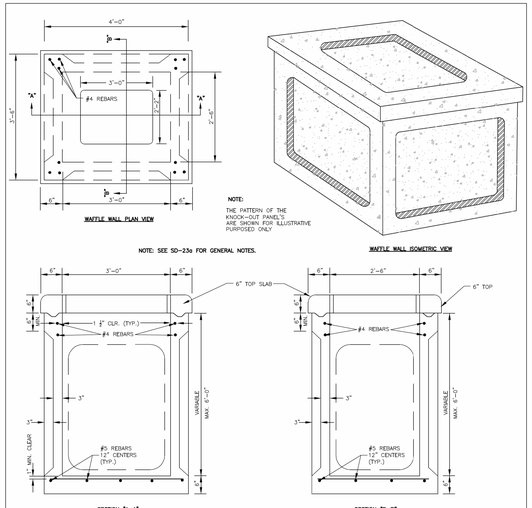

	STANDARD DETAIL	CITY OF WILMINGTON NORTH CAROLINA
DATE: 2001	PRECAST WAFFLE DRAINAGE STRUCTURE	CITY OF WILMINGTON ENGINEERING PO BOX 1810 WILMINGTON, NC 28402 (910) 341-7807
DRAWN BY JSR/CMR		
CHECKED BY B.P., P.E.		
SCALE NOT TO SCALE		SD 2-23

GENERAL NOTES:

* USE 4000 PSI CONCRETE, PROVIDE FOR H-20 TRAFFIC LOADING.
* PROVIDE ALL REINFORCING STEEL WHICH MEETS ASTM A615 FOR GRADE 60 AND WELDED WIRE FAVRIC CONFORMING TO ASTM A185,
* LIMIT MAXIMUM DEPTH TO TOP OF BOTTOM SLAB FOR WAFFLE WALL STRUCTURE TO 6'-0".
* PLACE LIFT HOLES OR PINS IN ACCORDANCE WITH OSHA STANDARD 1926.704
* SAW CUT, CORE DRILL OR FORM OPENINGS, FOR PIPE TO PROVIDE REQUIRED SIZE AND LOCATION. ORIENT WAFFLE WALL STRUCTURES SO THAT PIPES ENTER THROUGH THE KNOCKOUT/WAFFLE PANELS ONLY. SEAL OPENINGS WITH HYDRAULIC CEMENT.
* ALL ELEMENTS PRECAST TO MEET ASTM C913.
* SET ON 6" WASHED STONE
* FRAME AND GRATE HEIGHT MAY BE ADJUSTED WITH BRICK.
* PROVIDE PRECAST STURCTURES OVER 4'-0" IN DEPTH WITH STEPS/LADDER INSTALLED IN ACCORDANCE WITH ASHA STANDARD 1910.27 AND AS FIELD CONDITIONS DICTATE.
* WELDED WIRE FABRIC MAY BE SUBSTITUTED FOR REBAR AS LONG AS THE SAME AREA OF STEEL IS PROVIDED,
* SEAL JOINTS WITH A FLEXIBLE BUTYL RUBBER BASE CONFORMING TO FEDERAL SPECIFICATION SS-S-21A, AASHTO M-19B, TYPE B - BUTYL RUBBER.
* LIMIT MAXIMUM STRUCTURE SIZE TO INSIDE CLEAR DEMENSIONS OF 2'- 6" x 3' - 0".
* USE FRAME AND GRATE AS PER SD-19.
* GROUT INVERT TO PROVIDE SMOOTH FLOW

	STANDARD DETAIL	CITY OF WILMINGTON NORTH CAROLINA
DATE: 2001	PRECAST WAFFLE DRAINAGE STRUCTURE GENERAL NOTES	CITY OF WILMINGTON ENGINEERING PO BOX 1810 WILMINGTON, NC 28402 (910) 341-7807
DRAWN BY JSR/CMR		
CHECKED BY B.P., P.E.		
SCALE NOT TO SCALE		SD 2-23a

PROJECT NO.: PW1033

DRAWING NO.: W:/MASTER/PW1033/DGN/EC.DGN

FINAL DESIGN
NOT RELEASED FOR
CONSTRUCTION

NORTH CAROLINA PROFESSIONAL SEAL 35677 ENGINEER DAVID L. MENIUS

DAVID L. MENIUS, P.E.
DATE 1/7/2014

REVISIONS

BY	NO.	DATE	DESCRIPTION
	1		

DETAILS

Belle Meade Village

WILMINGTON TOWNSHIP NEW HANOVER COUNTY NORTH CAROLINA

OWNER: SHP BELLEMEADE, LLC

ADDRESS: 1442 MILITARY CUTOFF RD. STE 26
WILMINGTON, NC 28403
(910 509-1781

STROUD ENGINEERING, P.A.
C-0647
102-D CINEMA DRIVE
WILMINGTON, NORTH CAROLINA
(910) 815-0775 (910) 815-0593 FAX

DESIGNED:	JHF
DRAWN:	GAG
APPROVED:	JHF
DATE:	8/2/2013
SCALE:	AS NOTED
SHEET	11 OF 12

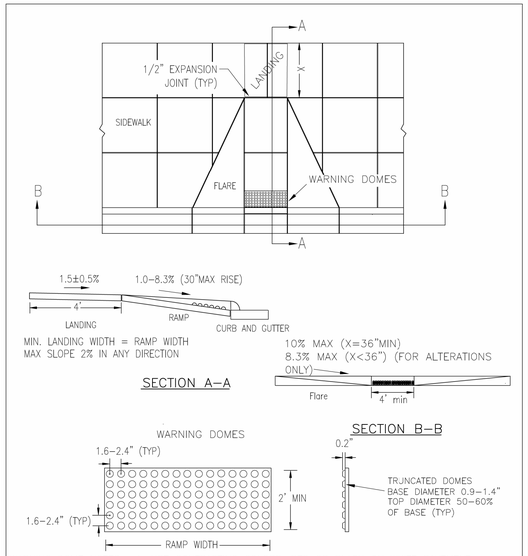

WARNING DOME NOTES:
1. USE CONTRASTING COLORS, RED OR BLACK ON WHITE PAVEMENT.
2. USE CAST IN PLACE PAVERS FOR NEW CONSTRUCTION.
3. RUBBER MATS ARE PERMITTED FOR RETROFITS.
4. LANDING AND RAMP WIDTH MAY BE REDUCED TO 3' WHERE SPACE IS LIMITED AND DESIGN IS APPROVED BY THE CITY ENGINEER.

DATE: DECEMBER, 2010	STANDARD DETAIL	CITY OF WILMINGTON NORTH CAROLINA
DRAWN: PB/JSR	PERPENDICULAR CURB RAMP ADJACENT TO WALKING SURFACE	CITY OF WILMINGTON ENGINEERING PO BOX 1810 WILMINGTON N.C. 28402 (910) 341-7807
CHECKED: DEC		
SCALE NOT TO SCALE		SD 3-07

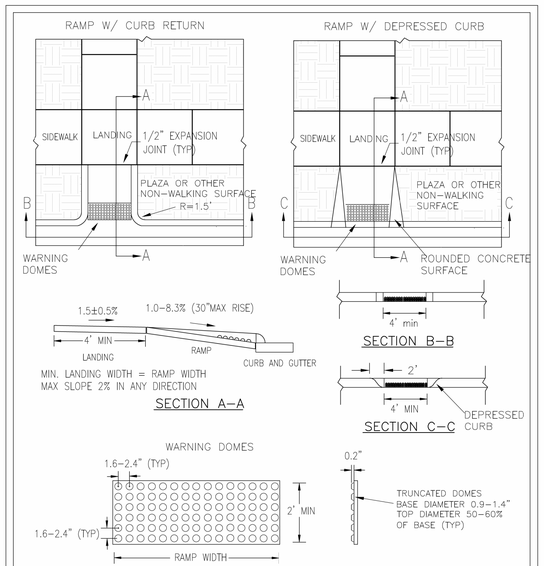

WARNING DOME NOTES:
1. USE CONTRASTING COLORS, RED OR BLACK ON WHITE PAVEMENT.
2. USE CAST IN PLACE PAVERS FOR NEW CONSTRUCTION.
3. RUBBER MATS ARE PERMITTED FOR RETROFITS.
4. LANDING AND RAMP WIDTH MAY BE REDUCED TO 3' WHERE SPACE IS LIMITED AND DESIGN IS APPROVED BY THE CITY ENGINEER.

DATE: DECEMBER, 2010	STANDARD DETAIL	CITY OF WILMINGTON NORTH CAROLINA
DRAWN: PB/JSR	PERPENDICULAR CURB RAMP ADJACENT TO PLAZA	CITY OF WILMINGTON ENGINEERING PO BOX 1810 WILMINGTON N.C. 28402 (910) 341-7807
CHECKED: DEC		
SCALE NOT TO SCALE		SD3-08

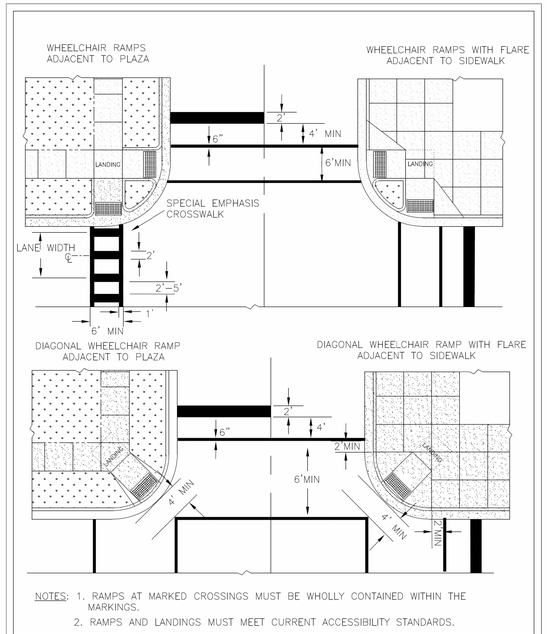

DATE: AUGUST, 2011	STANDARD DETAIL	CITY OF WILMINGTON NORTH CAROLINA
DRAWN: PB/JSR	INTERSECTION LAYOUT	CITY OF WILMINGTON ENGINEERING PO BOX 1810 WILMINGTON N.C. 28402 (910) 341-7807
CHECKED: DEC		
SCALE NOT TO SCALE		SD 3-09

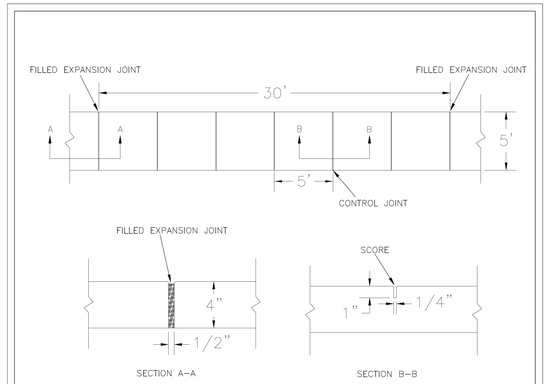

NOTES:
1. JOINT MATERIAL TO COMPLY WITH CURRENT NCDOT STANDARDS.
2. SANITARY SEWER CLEAN-OUTS, WATER METERS, MANHOLES, AND VALVE LIDS TO BE LOCATED OUTSIDE SIDEWALK WHERE FEASIBLE.
3. MINIMUM SIDEWALK WIDTH TO BE 6' MINIMUM IF PLACED AT BACK OF CURB.
4. CONCRETE FOR ALL SIDEWALKS (EXCEPT ANY PORTION CONTAIN WITHIN A DRIVEWAY APRON) SHALL BE CLASS "A" - 3,000 PSI.
5. MINIMUM REPLACEMENT FOR REPAIRS IS A 5' X 5' PANEL
6. 4" STONE BASE MAY BE REQUIRED FOR POOR SOIL CONDITIONS
7. MINIMUM DEPTH FOR TUNNELING BELOW SIDEWALK IS 12"
8. MAX ADJACENT GROUND SLOPE WITHOUT RAILING IS 2:1
9. MIN GRADE FOR PROPER DRAINAGE IS 1% IN AT LEAST 1 DIRECTION. MAX CROSS SLOPE IS 2%. MAX LONGITUDINAL SLOPE IS 8.3%, 10% IF LIMITED BY EXISTING CONDITIONS, OR NO GREATER THAN THE SLOPE OF THE EXISTING ADJACENT ROAD.

DATE: OCTOBER, 2010	STANDARD DETAIL	CITY OF WILMINGTON NORTH CAROLINA
DRAWN: PB/JSR	SIDEWALK	CITY OF WILMINGTON ENGINEERING PO BOX 1810 WILMINGTON N.C. 28402 (910) 341-7807
CHECKED: DEC		
SCALE NOT TO SCALE		SD 3-10

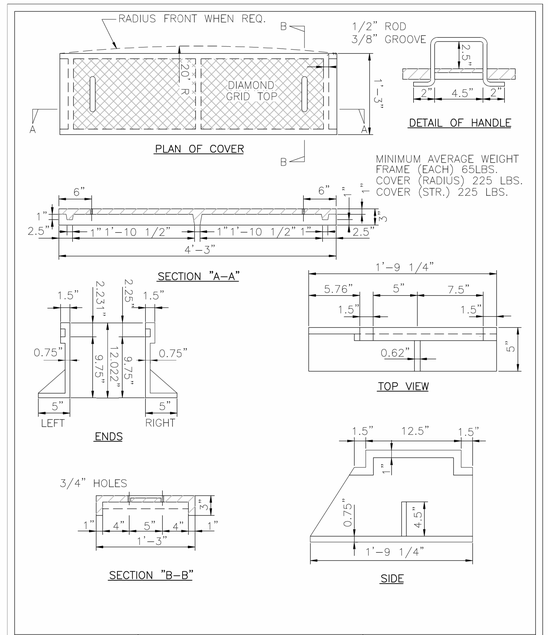

DATE: 2001	STANDARD DETAIL	CITY OF WILMINGTON NORTH CAROLINA
DRAWN BY JSR/CMR	CATCH BASIN CASTINGS DETAIL	CITY OF WILMINGTON ENGINEERING PO BOX 1810 WILMINGTON, NC 28402 (910) 341-7807
CHECKED BY B.P., P.E.		
SCALE NOT TO SCALE		SD 2-16

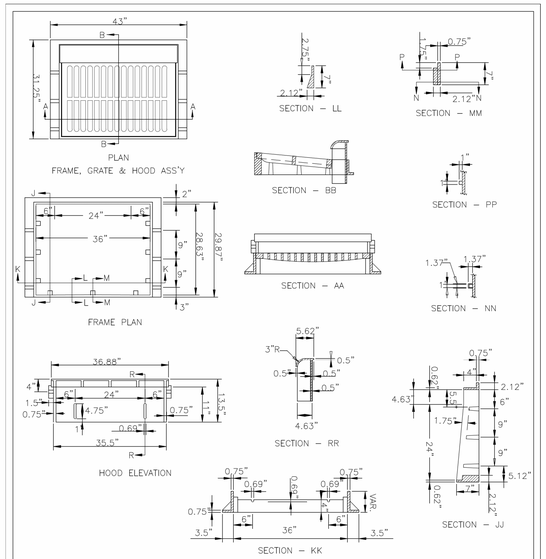

NOTES: 1) USE TYPE "E","F",& "G" GRATE UNLESS OTHERWISE INDICATED
2) TOP OF HOOD CASTING SHALL HAVE REAISED LETTERS WHICH SAY: "KEEP STORM DRAIN CLEAN! DRAINS TO CREEK". PROVIDE PICTURE OF FISH BETWEEN TWO STATEMENTS.

DATE: 2001	STANDARD DETAIL	CITY OF WILMINGTON NORTH CAROLINA
DRAWN BY JSR/CMR	CATCH BASIN CASTING FOR 30" HOOD AND GRATE	CITY OF WILMINGTON ENGINEERING PO BOX 1810 WILMINGTON, NC 28402 (910) 341-7807
CHECKED BY B.P., P.E.		
SCALE NOT TO SCALE		SD 2-19

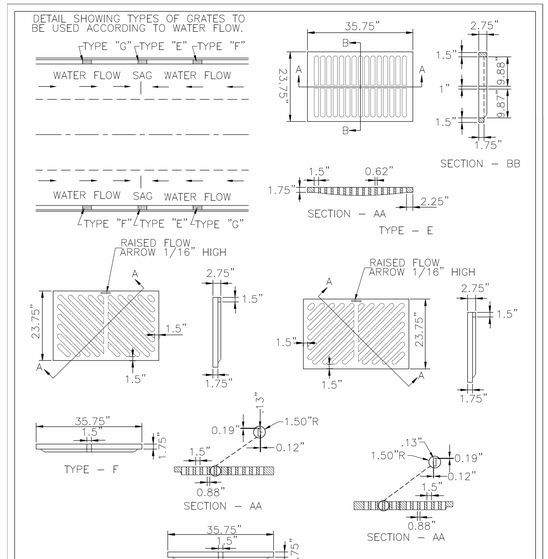

DATE: 2003	STANDARD DETAIL	CITY OF WILMINGTON NORTH CAROLINA
DRAWN BY JSR/CMR	CATCH BASIN GRATE FOR 30" HOOD AND GRATE	CITY OF WILMINGTON ENGINEERING PO BOX 1810 WILMINGTON, NC 28402 (910) 341-7807
CHECKED BY B.P., P.E.		
SCALE NOT TO SCALE		SD 2-20

FINAL DESIGN
NOT RELEASED FOR
CONSTRUCTION

NORTH CAROLINA PROFESSIONAL SEAL 35677 ENGINEER DAVID L. MENDUS

DAVID L. MENDUS, P.E.
DATE 1/7/2014

REVISIONS

BY	NO.	DATE	DESCRIPTION

DETAILS

Belle Meade Village

WILMINGTON TOWNSHIP NEW HANOVER COUNTY NORTH CAROLINA

OWNER: SHP BELLEMEADE, LLC
ADDRESS: 1442 MILITARY CUTOFF RD. STE 26
WILMINGTON, NC 28403
(910 509-1781

STROUD ENGINEERING, P.A. C-0647
102-D CINEMA DRIVE
WILMINGTON, NORTH CAROLINA
(910) 815-0775 (910) 815-0593 FAX

DESIGNED:	JHF
DRAWN:	GAG
APPROVED:	JHF
DATE:	8/2/2013
SCALE:	AS NOTED
SHEET	12 OF 12

PROJECT NO.: PW1033
DRAWING NO.: W:/MASTER/PW1033/DGN/EC.DGN