THE LIGHTHOUSE APARTMENTS

WILMINGTON, NORTH CAROLINA

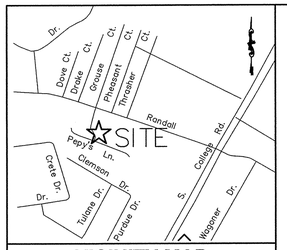

VICINITY MAP
N.T.S.

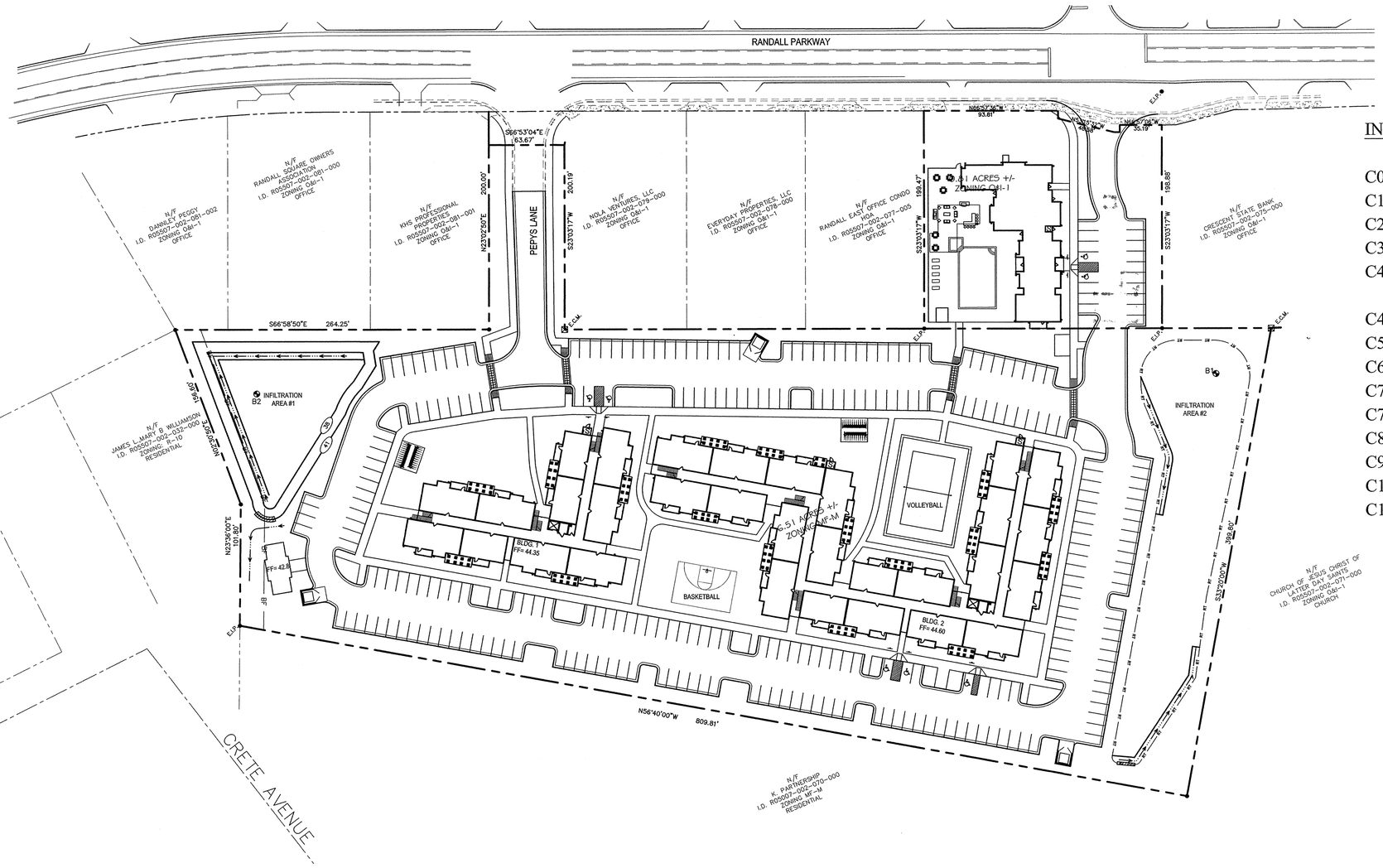

INDEX OF SHEETS

C0	COVER SHEET
C1	EXISTING CONDITIONS
C2	DEMO SHEET
C3	SITE PLAN
C4	GRADING, DRAINAGE & EROSION CONTROL PLAN
C4.1	ROOF DRAIN PLAN
C5	UTILITY PLAN
C6	SEWER PLAN & PROFILE
C7	DETAILS
C7.1	DETAILS
C8	POND DETAILS
C9	CFPUA DETAILS
C10	CFPUA DETAILS
C11	CFPUA DETAILS

SYMBOL	DATE	DESCRIPTION	BY
R2	03/14/13	REVISED COVER SHEET AND SHEET INDEX	JPN
R1	03/07/13	REVISED OWNER INFORMATION AND PROJECT ADDRESS	JPN

REVISIONS

©2013 NORRIS & TUNSTALL

COVER SHEET
THE LIGHTHOUSE APARTMENTS
4926 RANDALL PARKWAY
WILMINGTON, NORTH CAROLINA

OWNER:
RB-WILMINGTON, LLC A A DELAWARE LIMITED LIABILITY COMPANY
2234 W. NORTH AVE.
CHICAGO, IL 60647

NORRIS & TUNSTALL
CONSULTING ENGINEERS, P.C.
1127 FLORAL PARKWAY, SUITE 400
WILMINGTON, NC, 28403
PHONE (910) 343-9653
FAX (910) 343-9604
N&T LICENSE NO. C-3641

12080

DES.	JPN
CKD.	JPN
DRWN.	EDB
DATE	04/11/13

NORTH CAROLINA PROFESSIONAL SEAL 11965 ENGINEER JOHN PHILLIP NORRIS

C0

SCALE: 1" = 40'
0 40 80 120

Approved Construction Plan

	Name	Date
Planning		
Traffic		
Fire		

For each open utility cut of City streets, a $325 permit shall be required from the City prior to occupancy and/or project acceptance.

1 inch

STORMWATER MANAGEMENT PLAN
APPROVED
CITY OF WILMINGTON
ENGINEERING DEPARTMENT
DATE _____ PERMIT # _____
SIGNED _____

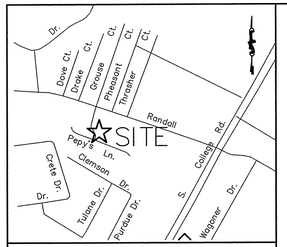

VICINITY MAP
N.T.S.

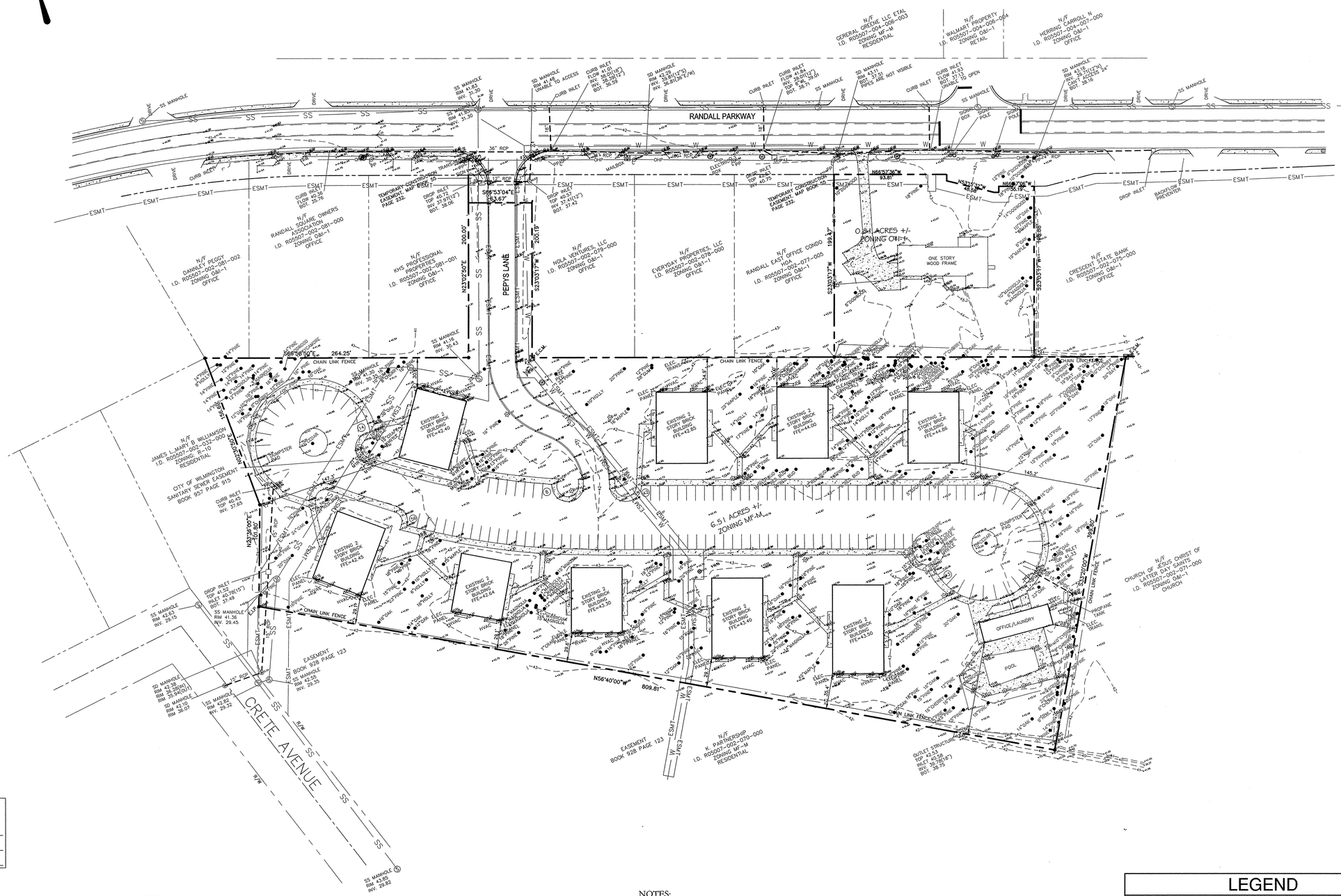

SYMBOL	DATE	DESCRIPTION	BY
R1	03/07/13	REVISED OWNER INFORMATION AND PROJECT ADDRESS	JPN

REVISIONS

©2013 NORRIS & TUNSTALL

SITE INVENTORY MAP
THE LIGHTHOUSE APARTMENTS
4926 RANDALL PARKWAY
WILMINGTON, NORTH CAROLINA

OWNER:
RB-WILMINGTON, LLC A A
DELAWARE LIMITED
LIABILITY COMPANY
2234 W. NORTH AVE.
CHICAGO, IL 60647

NORRIS & TUNSTALL
CONSULTING ENGINEERS, P.C.
1127 FLORAL PARKWAY, SUITE 400
WILMINGTON, NC, 28403
PHONE (910) 343-9653
FAX (910) 343-9604
N&T LICENSE NO. C-3641

12080

DES.	JPN
CKD.	JPN
DRWN.	EDB
DATE	03/07/13

NORTH CAROLINA PROFESSIONAL SEAL 11966 ENGINEER JOHN PHILLIP NORRIS 03-07-13

C1

Approved Construction Plan

	Name	Date
Planning		
Traffic		
Fire		

For each open utility cut of City streets, a $325 permit shall be required from the City prior to occupancy and/or project acceptance.

1 inch

STORMWATER MANAGEMENT PLAN
APPROVED
CITY OF WILMINGTON
ENGINEERING DEPARTMENT
DATE _____ PERMIT # _____
SIGNED_____

NOTES:
1. PROPERTY IS NOT WITHIN ANY FLOOD PLAIN BOUNDARY.
2. THERE ARE NO CONSERVATION RESOURCES ON OR ADJACENT TO THIS PROPERTY.
3. THIS SITE IS NOT RECOGNIZED AS A LOCAL, STATE OR FEDERALLY HISTORIC OR ARCHEOLOGICAL SITE.
4. THERE ARE NO WETLANDS ON THE SITE.
5. THE CAMA LAND USE CLASSIFICATION IS URBAN.
6. THE SOILS ON THIS SITE ARE MAPPED AS THE LEON SOIL SERIES.

SCALE: 1" = 50'
0 50 100 150

LEGEND

	PROPERTY LINE
	RIGHT OF WAY
ESMT	EASEMENT
42	EXISTING CONTOUR
+42.54	EXISTING SPOT ELEVATION
17"PINE	EXISTING TREE

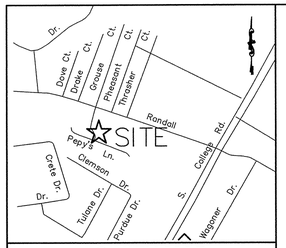

VICINITY MAP
N.T.S.

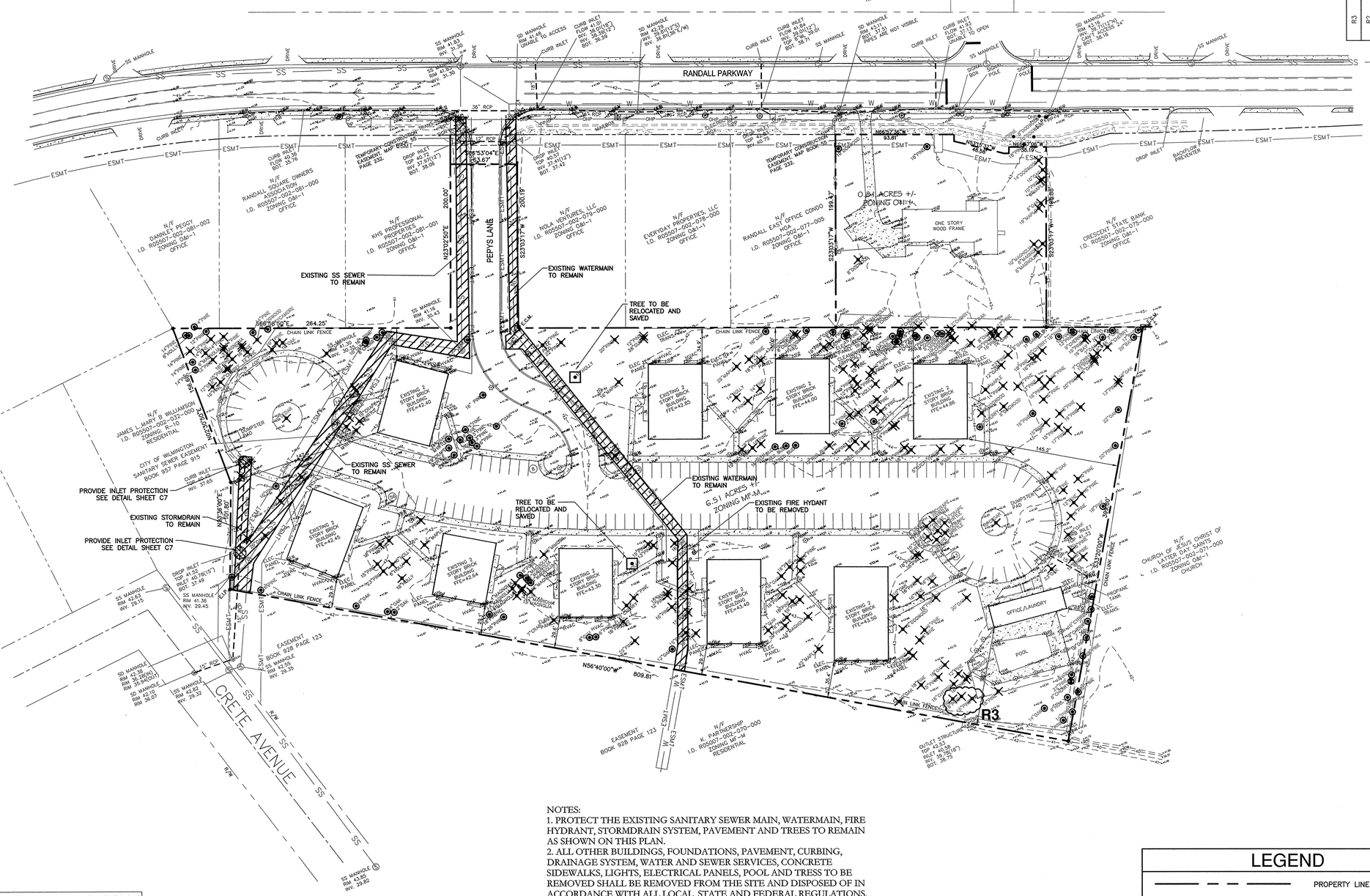

SYMBOL	DATE	DESCRIPTION	BY
R3	03/27/13	ADDED 3 TREES TO BE REMOVED	JPN
R2	03/07/13	REVISED OWNER INFORMATION AND PROJECT ADDRESS	JPN
R1	02/12/13	ADDED NOTE 5, ADDED INLET PROTECTION	JPN

REVISIONS

© 2013 NORRIS & TUNSTALL

DEMO PLAN
THE LIGHTHOUSE APARTMENTS
4926 RANDALL PARKWAY
WILMINGTON, NORTH CAROLINA

OWNER:
RB-WILMINGTON, LLC
A DELAWARE LIMITED
LIABILITY COMPANY
2234 W. NORTH AVE.
CHICAGO, IL 60647

NORRIS & TUNSTALL
CONSULTING ENGINEERS, P.C.
1127 FLORAL PARKWAY, SUITE 400 PHONE (910) 343-9653
WILMINGTON, NC, 28403 FAX (910) 343-9604
N&T LICENSE NO. C-3641

12080

DES.	JPN
CKD.	JPN
DRWN.	EDB
DATE	03/07/13

NORTH CAROLINA PROFESSIONAL SEAL 11966 ENGINEER JOHN PHILLIP NORRIS 3-27-13

C2

Approved Construction Plan

	Name	Date
Planning		
Traffic		
Fire		

For each open utility cut of City streets, a $325 permit shall be required from the City prior to occupancy and/or project acceptance.

1 inch

STORMWATER MANAGEMENT PLAN
APPROVED
CITY OF WILMINGTON
ENGINEERING DEPARTMENT
DATE _____ PERMIT # _____
SIGNED_____

NOTES:
1. PROTECT THE EXISTING SANITARY SEWER MAIN, WATERMAIN, FIRE HYDRANT, STORMDRAIN SYSTEM, PAVEMENT AND TREES TO REMAIN AS SHOWN ON THIS PLAN.
2. ALL OTHER BUILDINGS, FOUNDATIONS, PAVEMENT, CURBING, DRAINAGE SYSTEM, WATER AND SEWER SERVICES, CONCRETE SIDEWALKS, LIGHTS, ELECTRICAL PANELS, POOL AND TRESS TO BE REMOVED SHALL BE REMOVED FROM THE SITE AND DISPOSED OF IN ACCORDANCE WITH ALL LOCAL, STATE AND FEDERAL REGULATIONS.
3. COORDINATE WITH CAPE FEAR PUBLIC UTILITY AUTHORITY BEFORE DISCONNECTING ALL WATER AND SEWER SERVICES.
4. COORDINATE WITH LOCAL POWER, TELEPHONE, CABLE AND GAS COMPANIES BEFORE REMOVING ANY OF THEIR SERVICES.
5. INSTALL TEMPORARY SILT FENCE AS SHOWN ON SHEET C4 AND INLET PROTECTION AS SHOWN ON THIS DRAWING.

SCALE: 1" = 50'
0 50 100 150

LEGEND

	PROPERTY LINE
	RIGHT OF WAY
ESMT	EASEMENT
42	EXISTING CONTOUR
+42.54	EXISTING SPOT ELEVATION
	EXISTING TREE TO BE RELOCATED AND SAVED
	EXISTING TREE TO BE SAVED
	EXISTING TREE TO BE REMOVED

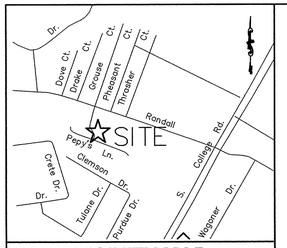

VICINITY MAP

N.T.S.

SITE DATA TABLE

SITE AREA:		318,859 SF / 7.32 AC	
PARCEL ID#:	4922 PEPYS LN.	R05507-002-080-000	(6.51 AC)
	4926 RANDALL PKWY.	R05507-002-076-000	(0.81 AC)
ZONING:		R05507-002-080-000	(MF-M)
		R05507-002-076-000	(O&I-1)

DISTURBED AREA: 316,652.62 SF / 7.27 ACRES
15 TREES PER DISTURBED ACRE IS REQUIRED ON THE SITE. = 110 TREES
CAMA LAND USE: URBAN
SOIL TYPES ON SITE: LEON

BUILDING SETBACKS: MF-M	REQUIRED	ACTUAL
	FRONT: 35'	FRONT: 85'/89'
	* SIDE: 32'	SIDE: 137'/147'
	* REAR: 37'	REAR: 81'
	* INCREASED DUE TO BUILDING HEIGHT	

BUILDING SETBACKS: O&I-1	REQUIRED	ACTUAL
	FRONT: 20'	FRONT: 43'/133'
	* SIDE: 10'	SIDE: 85'/10'
	* REAR: N/A	REAR: N/A
	* INCREASED DUE TO BUILDING HEIGHT	

BUILDINGS 1 & 2: TYPE 3B CONSTRUCTION
CLUB HOUSE BUILDING: TYPE 5A & 5B CONSTRUCTION

PROPOSED BUILDING:		USES:	HEIGHT:	SIZE:
BLDG. 1	4 STORY	RESIDENTIAL	56'	14,385 SF/FLOOR
BLDG. 2	4 STORY	RESIDENTIAL	56'	31,136 SF/FLOOR
CLUB HOUSE		RECREATION/PERSONAL SERVICES	25'	6,134 SF
	RECREATION	6,053 SF		
	PERSONAL SERVICES	81 SF		
MAINTENANCE BUILDING				744 SF
POOL EQUIPMENT BUILDING				120 SF
BUS SHELTER/MAIL KIOSK				234 SF
TOTAL FOOTPRINT OF BUILDINGS:				52,753 SF

MAX DENSITY: 17 UNITS / AC
ACTUAL DENSITY: 124 UNITS / 7.32 AC= 16.94 UNITS / AC
TOTAL FOOTPRINT OF BUILDINGS: 59,045 SF
MAX LOT COVERAGE: 30%
ACTUAL LOT COVERAGE: 18.52%

UNITS PER BUILDING:
BUILDING 1: 12-2 BR UNITS & 28-3 BR UNITS
BUILDING 2: 12-2 BR UNITS & 72-3 BR UNITS

REQUIRED PARKING: 2.25 SP. PER 3 BED UNITS
2.0 SP. PER 2 BED UNITS
1 SP. PER 400 SF MIN., 1 SP. PER 225 SF MAX.

REQUIRED PARKING: 3 BED UNITS = 2.25(100) = 225 SP.
2 BED UNITS = 2.0(24) = 48 SP.
(81 SF/400)1 = 1 SP.

TOTAL REQUIRED PARKING: 274 SP. (INCLUDES 7 HC)
PARKING PROVIDED: 277 SP. (INCLUDING 7 HC)

BICYCLE PARKING:
REQUIRED: 274 PARKING SPACES = MIN. 15
PROVIDED: 50 BICYCLE SPACES

IMPERVIOUS AREAS: PROPOSED

BLDG. 1	14,385 SF
BLDG. 2	31,136 SF
CLUB HOUSE (INCLUDES SALES OFFICE & MODEL UNIT)	6,134 SF
MAINTENANCE BUILDING	744 SF
POOL EQUIPMENT BUILDING:	120 SF
BUS SHELTER/MAIL KIOSK	234 SF
ASPHALT	96,621 SF
SIDEWALK	22,005 SF
BASKETBALL COURT	1,750 SF
ACTIVITY CENTER PATIO	8,165 SF
TOTAL IMPERVIOUS AREA:	181,294 SF / 4.16 AC
% IMPERVIOUS:	56.83%

IMPERVIOUS AREAS: EXISTING
ALL EXISTING IMPERVIOUS SURFACES TO BE REMOVED

OPEN SPACE
REQUIRED: 35% OF SITE AREA LESS INFILTRATION AREA #2
(318,859 SF-21,127 SF) x .35 104,206 SF
PROVIDED OPEN SPACE: 104,743 SF / 35.18%
ACTIVE PROVIDED: 41,167 SF
PASSIVE PROVIDED: 63,576 SF

SHADED AREA REQUIRED:
REQUIRED: 20% x 96,621 SF= 19,325 SF
PROVIDED: SEE LANDSCAPE PLAN

ISLAND AREA PROVIDED: 12,688 SF

PRIMARY STREET YARD REQUIRED: (200 LF - 28 LF)18 = 3,096 SF
PRIMARY STREET YARD PROVIDED: 3,142 SF

FOUNDATION PLANTINGS REQUIRED: BLDG. 1
FRONT: (187'(L)x44'(H))(.12)= 987.4 SF
SIDE: (55'(L)x44'(H))(.12)= 290.4 SF
REAR: (95'(L)x44'(H))(.12)= 501.6 SF
REAR: (55'(L)x44'(H))(.12)= 290.4 SF

FOUNDATION PLANTINGS PROVIDED: BLDG. 1
FRONT: 1,860 SF
SIDE: 307 SF
REAR: 586 SF
REAR: 320 SF

FOUNDATION PLANTINGS REQUIRED: BLDG. 2
FRONT: (218'(L)x44'(H))(.12)= 1,151.0 SF
SIDE: (175'(L)x44'(H))(.12)= 924.0 SF
REAR: (55'(L)x44'(H))(.12)= 290.4 SF
REAR: (167'(L)x44'(H))(.12)= 881.8 SF

FOUNDATION PLANTINGS PROVIDED: BLDG. 2
FRONT: 2,040 SF
SIDE: 1,425 SF
REAR: 427 SF
REAR: 910 SF

FOUNDATION PLANTINGS REQUIRED: CLUB HOUSE
FRONT: (131'(L)x12'(H))(.12)= 188.6 SF
SIDE: (37'(L)x12'(H))(.12)= 53.3 SF

FOUNDATION PLANTINGS PROVIDED: CLUB HOUSE
FRONT: 1,130 SF
SIDE: 129 SF

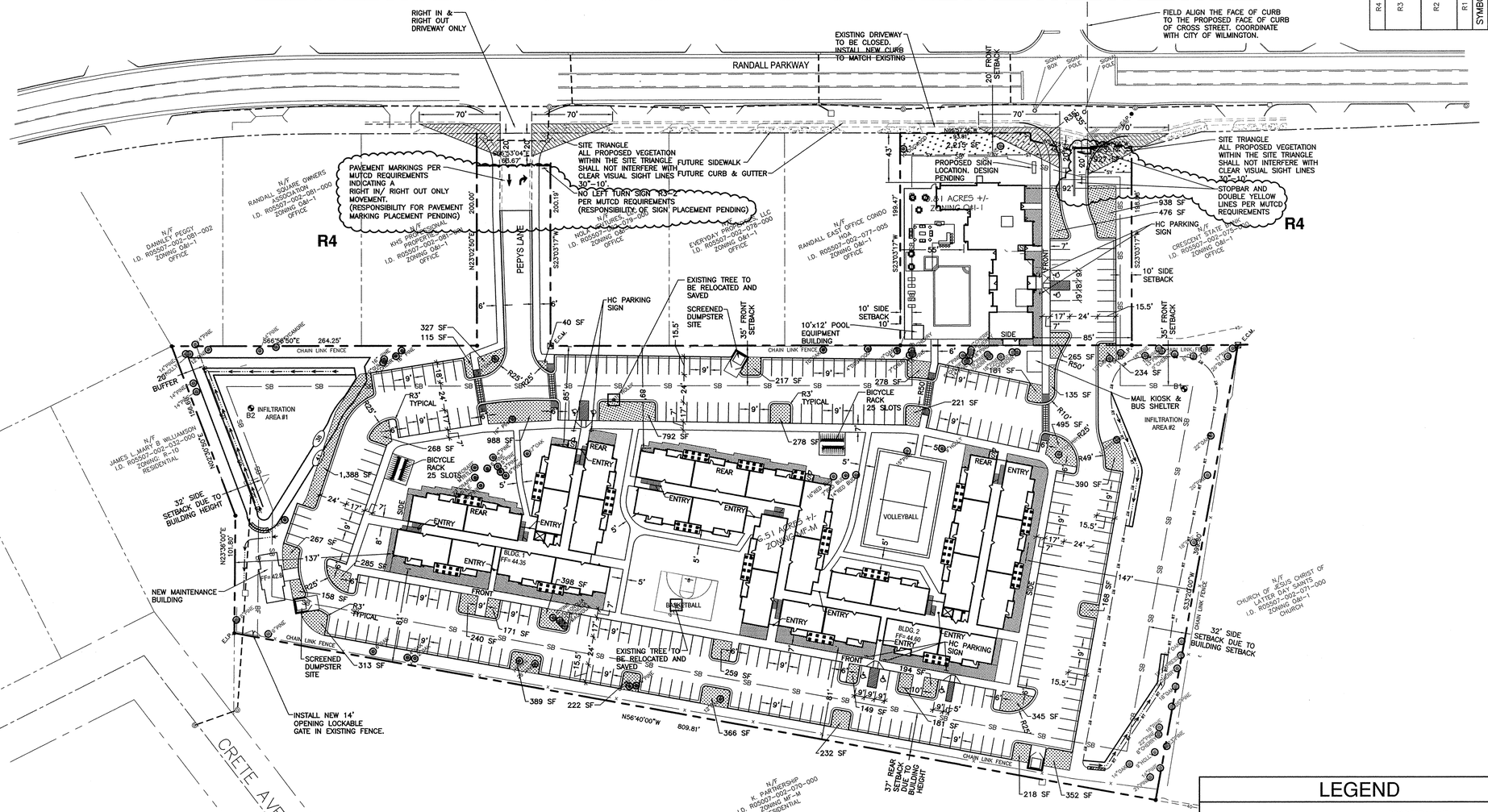

SYMBOL	DATE	DESCRIPTION	BY
R4	05/07/13	UPDATED SITE DATA, ADDED PAVEMENT MARKING	JPN
R3	04/11/13	ADDED BUS DIMENSIONS, REVISED SIDEWALK WIDTH NEXT TO PARKING, ADDED HC RAMPS, ADDED SIGN LOCATION, MODIFIED NOTES AND LEGEND	JPN
R2	03/27/13	REVISED INFILTRATION AREA #1 & #2, REVISED REVISED PARKING LAYOUT, ADDED SUMM #12, RELOCATED C#11, C#13 AND C#14, REMOVED SECTION OF SD PIPE	JPN
R1	03/07/13	REVISED OWNER INFORMATION AND PROJECT ADDRESS	JPN

REVISIONS

© 2013 NORRIS & TUNSTALL

SITE PLAN
THE LIGHTHOUSE APARTMENTS
4926 RANDALL PARKWAY
WILMINGTON, NORTH CAROLINA

OWNER:
RB-WILMINGTON, LLC
A DELAWARE LIMITED LIABILITY COMPANY
2234 W. NORTH AVE.
CHICAGO, IL 60647

NORRIS & TUNSTALL
CONSULTING ENGINEERS, P.C.
1127 FLORAL PARKWAY, SUITE 400
WILMINGTON, NC, 28403
PHONE (910) 343-9653
FAX (910) 343-9604
N&T LICENSE NO. C-3641

12080

DES. JPN
CKD. JPN
DRWN. EDB
DATE 04/11/13

NORTH CAROLINA PROFESSIONAL ENGINEER SEAL 11966 05/07/13 JOHN PHILLIP NORRIS

C3

LEGEND

	PROPERTY LINE
	RIGHT OF WAY
SB SB	SETBACK
BF BF	BUFFER
SY SY	STREET YARD
	24" CURB & GUTTER
42	EXISTING CONTOUR
+42.54	EXISTING SPOT ELEVATION
	EXISTING TREE TO BE RELOCATED AND SAVED
	EXISTING TREE TO BE SAVED
	FOUNDATION PLANTING
	STREET YARD / LANDSCAPING

NOTE:
1. USE 4" HIGH CURB & GUTTER THROUGHOUT PROJECT TO DEFINE PAVEMENT EDGE EXCEPT WHERE PAVEMENT ABUTS SIDEWALK. IN THOSE LOCATIONS USE TURN DOWN SIDEWALK TO DEFINE PAVEMENT EDGE.
2. TACTILE WARNING MATS ARE TO BE INSTALLED ON ALL WHEELCHAIR RAMPS.

SCALE: 1" = 50'
0 50 100 150

Approved Construction Plan
Name Date
Planning
Traffic
Fire

For each open utility cut of City streets, a $325 permit shall be required from the City prior to occupancy and/or project acceptance.

1 inch

STORMWATER MANAGEMENT PLAN
APPROVED
CITY OF WILMINGTON
ENGINEERING DEPARTMENT
DATE _____ PERMIT # _____
SIGNED _____

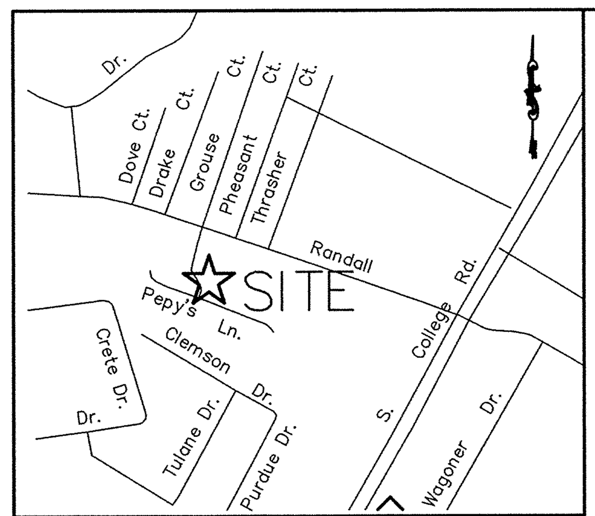

VICINITY MAP

N.T.S.

CITY OF WILMINGTON STANDARD NOTES:

1. CONTACT THE NORTH CAROLINA ONE CALL CENTER PRIOR TO DOING ANY DIGGING AT 1-800-632-4949.
2. PRIOR TO ANY CLEARING, GRADING OR CONSTRUCTION ACTIVITY, TREE PROTECTION FENCING WILL BE INSTALLED AROUND PROTECTED TREES OR GROVES OF TREES AND NO CONSTRUCTION WORKERS, TOOLS, MATERIALS, OR VEHICLES ARE PERMITTED WITHIN THE TREE PROTECTION FENCING. ALL TREE PROTECTION MUST BE MAINTAINED DURING CONSTRUCTION.
3. ALL PAVEMENT MARKINGS IN PUBLIC RIGHT-OF-WAY AND FOR DRIVEWAYS ARE TO BE THERMOPLASTIC AND MEET CITY AND/OR NCDOT STANDARDS.
4. THE SUBDIVIDER SHALL INSTALL TRAFFIC SIGNALS, TRAFFIC SIGNS, STREET NAME SIGNS AT ALL INTERSECTIONS ASSOCIATED WITH THE SUBDIVISION, DEAD-END BARRICADES AND MARKINGS, AND OTHER REQUIRED TRAFFIC CONTROL DEVICES IN ACCORDANCE WITH THE CITY'S TECHNICAL STANDARDS AND SPECIFICATIONS MANUAL.
5. TRAFFIC CONTROL DEVICES (INCLUDING SIGNS AND PAVEMENT MARKINGS) IN AREAS OPEN TO PUBLIC TRAFFIC ARE TO MEET MUTCD (MANUAL ON UNIFORM TRAFFIC CONTROL DEVICES) STANDARDS.
6. CONTACT TRAFFIC ENGINEERING AT 341-7888 TO ENSURE THAT ALL TRAFFIC SIGNAL FACILITIES AND EQUIPMENT ARE SHOWN ON THE PLAN. CALL TRAFFIC ENGINEERING AT 341-7888 FORTY-EIGHT HOURS PRIOR TO ANY EXCAVATION IN THE RIGHT-OF-WAY.
7. ANY BROKEN OR MISSING SIDEWALK PANELS, DRIVEWAY PANELS, OR CURBING WILL BE REPLACED.
8. CONTACT TRAFFIC ENGINEERING AT 341-7893 TO DISCUSS STREET LIGHTING OPTIONS.
9. THE NUMBER AND SPACING OF DRIVEWAYS FOR ALL INTERCONNECTED SITES WILL BE DETERMINED BY THE COMBINED FRONTAGE OF THE INTERCONNECTED PROPERTIES.
10. ALL SITE LIGHTING SHALL BE LOCATED AND INSTALLED SO AS NOT TO SHINE DIRECTLY ONTO ADJACENT PREMISES. UNRESTRICTED LIGHTING IS LIMITED TO A HEIGHT OF TEN (10) FEET AND 90 DEGREE CUTOFF LIGHTING IS LIMITED TO FIFTEEN (15) FEET.
11. MECHANICAL EQUIPMENT AND TRASH RECEPTACLES WILL BE SCREENED BY AN EIGHT (8) FEET HIGH OPAQUE FENCE.
12. PROJECT SHALL COMPLY WITH CAPE FEAR PUBLIC UTILITIES AUTHORITY CROSS CONNECTION CONTROL REQUIREMENTS. WATER METER(S) CANNOT BE RELEASED UNTIL ALL REQUIREMENTS ARE MET AND THE STATE HAS GIVEN THEIR FINAL APPROVAL.
13. IF THE CONTRACTOR DESIRES WATER FOR CONSTRUCTION HE SHALL APPLY IN ADVANCE FOR THIS SERVICE AND MUST PROVIDE A REDUCED PRESSURE ZONE BACKFLOW PREVENTION DEVICE ON THE DEVELOPER'S SIDE OF THE WATER METER BOX.
14. ANY IRRIGATION SYSTEM SHALL COMPLY WITH THE CAPE FEAR PUBLIC UTILITIES AUTHORITY CROSS CONNECTION CONTROL REGULATIONS.
15. ANY BACKFLOW PREVENTION DEVICES REQUIRED BY THE CAPE FEAR PUBLIC UTILITIES AUTHORITY WILL NEED TO BE ON THE LIST OF APPROVED DEVICES BY USCFCCCHR OR ASSE.
16. WHEN PVC WATER MAINS AND/OR POLYETHYLENE SERVICES ARE PROPOSED, THE PIPES ARE TO BE MARKED WITH NO. 10 SINGLE STRAND INSULATED COPPER WIRE INSTALLED THE ENTIRE LENGTH AND STRAPPED TO THE PIPES WITH DUCT TAPE. THE INSULATED WIRE IS TO BE STRIPPED TO BARE WIRE AND SECURED TO ALL VALVES. THIS WIRE IS TO BE ACCESSIBLE AT ALL FIRE HYDRANTS AND WATER METER BOXES TO AID IN FUTURE LOCATION OF FACILITIES.
17. CONTRACTOR SHALL COORDINATE ALL UTILITIES WITH CFPUA PRIOR TO CONSTRUCTION.
18. ALL TRAFFIC CONTROL SIGNS AND MARKING OFF THE RIGHT OF WAY ARE TO BE MAINTAINED BY THE PROPERTY OWNER IN ACCORDANCE WITH MUTCD STANDARDS.
19. ALL PARKING MARKINGS AND LANE ARROWS WITHIN THE PARKING AREA SHALL BE WHITE.
20. INSTALL REFLECTORS PER CITY AND NCDOT STANDARDS.
21. TRAFFIC ENGINEERING MUST APPROVE OF PAVEMENT MARKING LAYOUT PRIOR TO ACTUAL STRIPPING.
22. A LANDSCAPE PLAN INDICATING THE LOCATION OF REQUIRED STREET TREES SHALL BE SUBMITTED TO THE CITY OF WILMINGTON TRAFFIC ENGINEERING DIVISION AND PARKS AND RECREATION DEPARTMENT FOR REVIEW AND APPROVAL PRIOR TO THE RECORDING OF THE FINAL PLAT.
23. TACTILE WARNING MATS ARE TO BE INSTALLED ON ALL WHEELCHAIR RAMPS.
24. CALL 341-5888 TO SEE IF A UTILITY CUT PERMIT IS REQUIRED FOR EACH OPEN CUT OF A CITY STREET.
25. PROVIDE A LANDSCAPING PLAN FOR THE STORMWATER BASIN(S) AS IDENTIFIED IN SD 15-16.
26. THE IRRIGATION SYSTEM SHALL BE EQUIPPED WITH A RAIN AND FREEZE SENSOR.
27. DEPRESS LANDSCAPE AREAS WITH CURB CUT TO ALLOW RUNOFF INTO THESE AREAS. SEE PLAN.
28. ANY GROUND LEVEL MECHANICAL EQUIPMENT, HVAC AND ELECTRICAL PANELS MUST BE SCREENED FROM THE VIEW OF ANY ADJACENT PROPERTY OR RIGHT OF WAY.
29. A UTILITY CUT PERMIT IS REQUIRED FOR EACH OPEN CUT OF A CITY STREET. CONTACT 341-5888 FOR MORE DETAILS. IN CERTAIN CASES AN ENTIRE RESURFACING OF THE AREA BEING OPEN CUT MAY BE REQUIRED. PLEASE COORDINATE WITH ENGINEERING FOR CONSTRUCTION SEQUENCING FOR RANDALL PARKWAY WIDENING EFFORTS AND POTENTIAL LIMITATIONS ON CUTS TO NEW ASPHALT THAT COULD IMPACT THIS DEVELOPMENT.

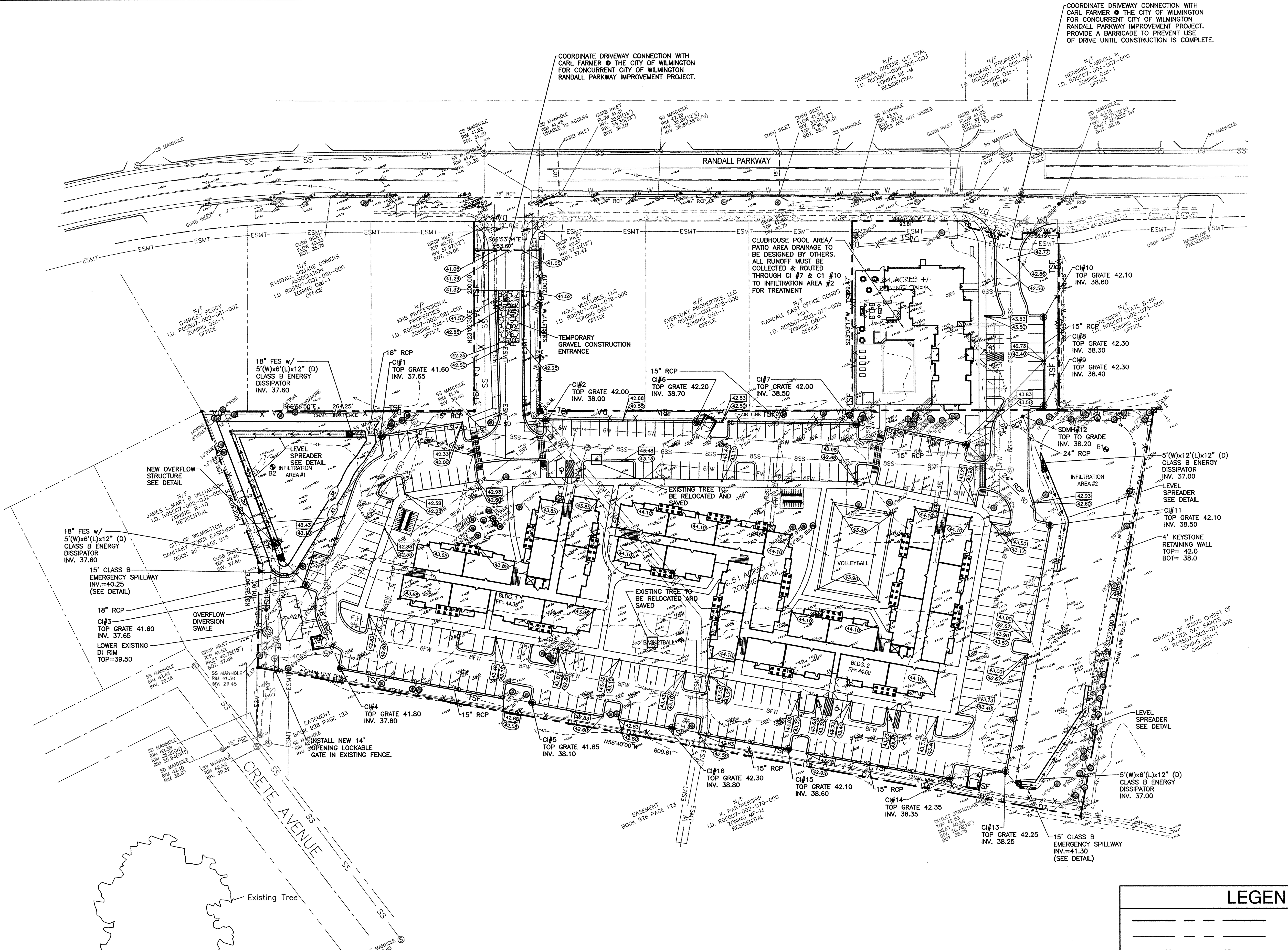

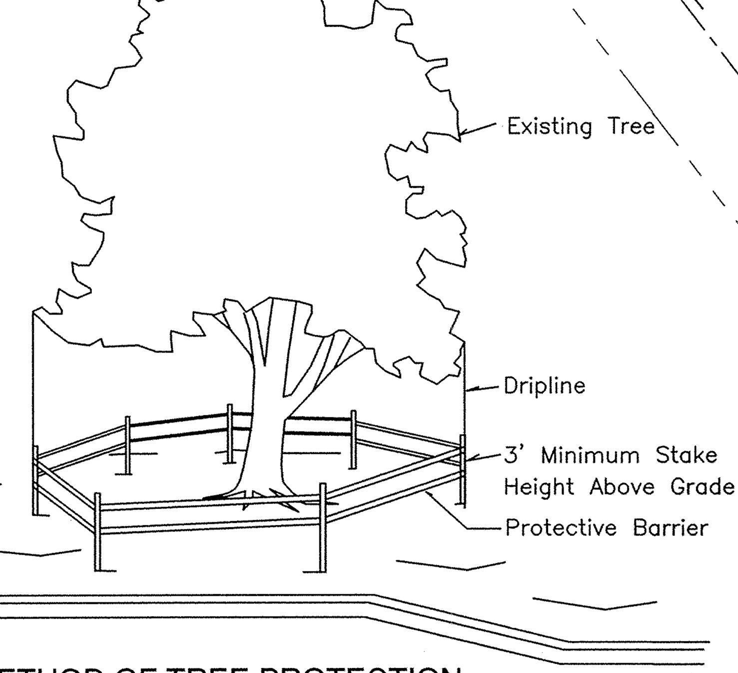

METHOD OF TREE PROTECTION NTS

CLEARLY mark the trees to be saved prior to construction and erect a protective barrier at the dripline.

Dripline—The area of soil directly beneath the tree extending out to the tips of the outermost branches.

Approved Construction Plan

	Name	Date
Planning		
Traffic		
Fire		

For each open utility cut of City streets, a $325 permit shall be required from the City prior to occupancy and/or project acceptance.

1 inch

STORMWATER MANAGEMENT PLAN
APPROVED
CITY OF WILMINGTON
ENGINEERING DEPARTMENT
DATE ________ PERMIT # ________
SIGNED ________________

SCALE: 1" = 50'
0 50 100 150

LEGEND

Symbol	Description
——— — — ———	PROPERTY LINE
——— — — ———	RIGHT OF WAY
—— SD —— SD ——	PROPOSED STORM DRAIN
—— 6W —— 6W ——	PROPOSED 6" WATER LINE
—— 6SS —— 6SS ——	PROPOSED 6" SANITARY SEWER
—— RT —— RT ——	4' KEYSTONE RETAINING WALL
—— ESMT —— ESMT ——	EASEMENT
— — —42— — —	EXISTING CONTOUR
—X—X— TSF	TEMPORARY SILT FENCE
—— DA —— DA ——	DISTURBED AREA
∘42.54	EXISTING SPOT ELEVATION
17"PINE	EXISTING TREE TO BE SAVED
43.60	PROPOSED TOP OF CURB
43.10	PROPOSED FINISH GRADE
	INLET PROTECTION

SYMBOL	DATE	DESCRIPTION	BY
R4	04/11/13	REVISED SIDEWALK WIDTHS AND REVISED NOTES.	JPN
R3	04/04/13	REVISED DRIVEWAY GRADES	JPN
R2	03/27/13	REVISED INFILTRATION AREA #1 & #2, REVISED REVISED PARKING LAYOUT, ADDED SDMH #12, RELOCATED CI#11, CI#13 AND CI#14, REMOVED SECTION OF SD PIPE	JPN
R1	03/07/13	REVISED OWNER INFORMATION AND PROJECT ADDRESS	JPN

REVISIONS

© 2013 NORRIS & TUNSTALL

GRADING, DRAINAGE AND EROSION CONTROL PLAN
THE LIGHTHOUSE APARTMENTS
4926 RANDALL PARKWAY
WILMINGTON, NORTH CAROLINA

OWNER:
RB-WILMINGTON, LLC
A DELAWARE LIMITED LIABILITY COMPANY
2234 W. NORTH AVE.
CHICAGO, IL 60647

NORRIS & TUNSTALL
CONSULTING ENGINEERS, P.C.
1127 FLORAL PARKWAY, SUITE 400
WILMINGTON, NC, 28403
N&T LICENSE NO. C-3641
PHONE (910) 343-9653
FAX (910) 343-9604

12080

DES. JPN
CKD. JPN
DRWN. EDB
DATE 04/11/13

NORTH CAROLINA PROFESSIONAL ENGINEER SEAL 11966 JOHN PHILLIP NORRIS

C4

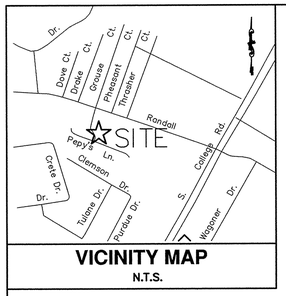

VICINITY MAP
N.T.S.

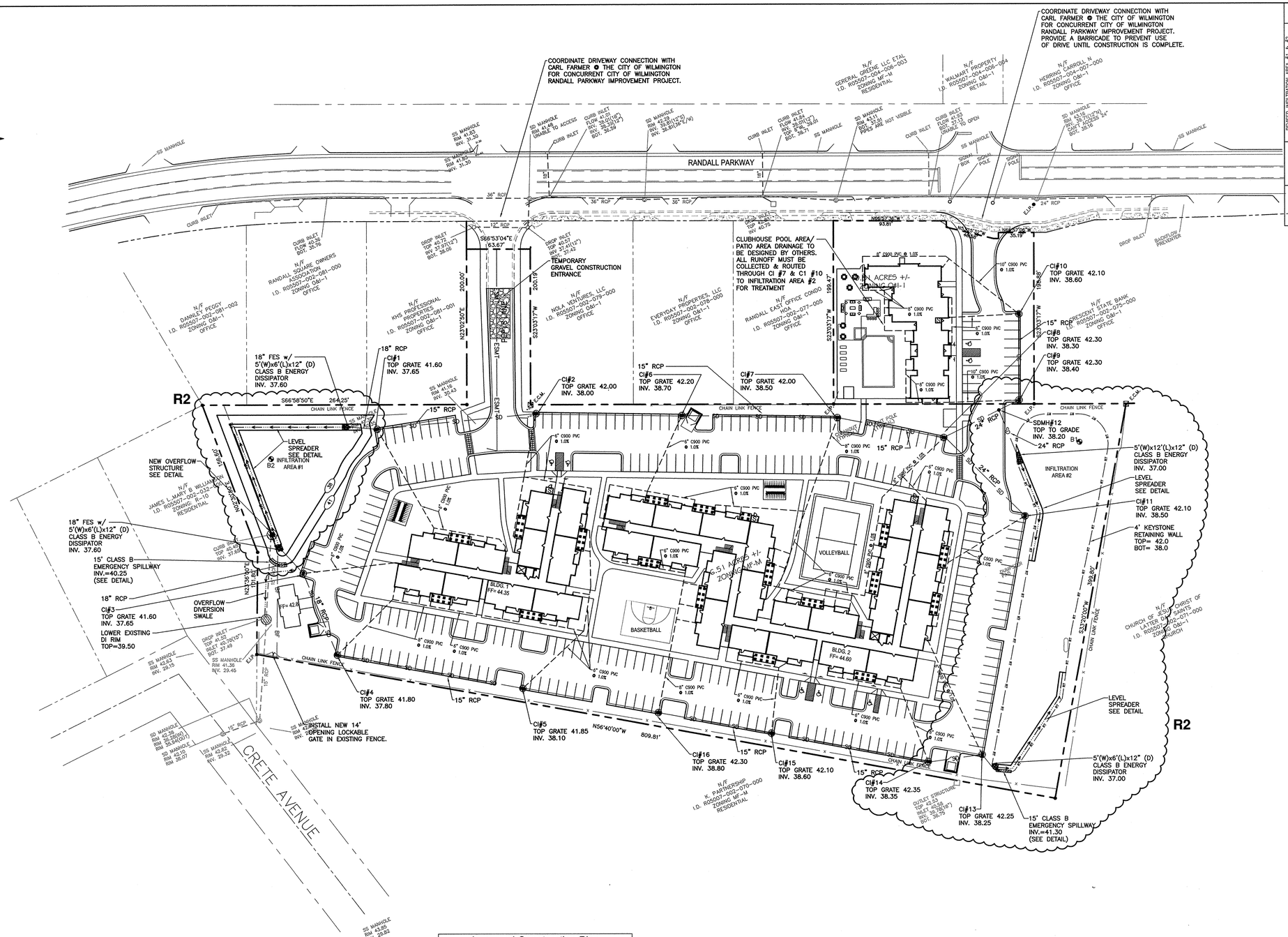

SYMBOL	DATE	DESCRIPTION	BY
R2	03/27/13	REVISED INFILTRATION AREA #1 & #2, REVISED PARKING LAYOUT, ADDED SDMH #12, RELOCATED CI#11, CI#13 AND CI#14, REMOVED SECTION OF SD PIPE	JPN
R1	03/07/13	REVISED PER CITY COMMENTS, RELOCATED DRIVEWAY ACCESS, ADDED ROOF DRAIN SIZES	JPN

REVISIONS

© 2013 NORRIS & TUNSTALL

ROOF DRAIN PLAN

THE LIGHTHOUSE APARTMENTS
4926 RANDALL PARKWAY
WILMINGTON, NORTH CAROLINA

OWNER:
RB-WILMINGTON, LLC
A DELAWARE LIMITED LIABILITY COMPANY
2234 W. NORTH AVE.
CHICAGO, IL 60647

NORRIS & TUNSTALL
CONSULTING ENGINEERS, P.C.
1127 FLORAL PARKWAY, SUITE 400
WILMINGTON, NC, 28403
PHONE (910) 343-9653
FAX (910) 343-9604
N&T LICENSE NO. C-3641

12080

DES.	JPN
CKD.	JPN
DRWN.	EDB
DATE	03/07/13

NORTH CAROLINA PROFESSIONAL SEAL 11966 ENGINEER JOHN PHILLIP NORRIS 03/07/13

C4.1

Approved Construction Plan

	Name	Date
Planning		
Traffic		
Fire		

For each open utility cut of City streets, a $325 permit shall be required from the City prior to occupancy and/or project acceptance.

1 inch

STORMWATER MANAGEMENT PLAN
APPROVED
CITY OF WILMINGTON
ENGINEERING DEPARTMENT
DATE _____ PERMIT # _____
SIGNED _____

SCALE: 1" = 50'
0 50 100 150

* NOTE: MINIMUM SIZE FOR ALL ROOF DRAIN LINES SHALL BE 6" C900 PVC.

LEGEND

	PROPERTY LINE
	RIGHT OF WAY
SD SD	PROPOSED STORM DRAIN
	PROPOSED ROOF DRAIN
	INLET PROTECTION

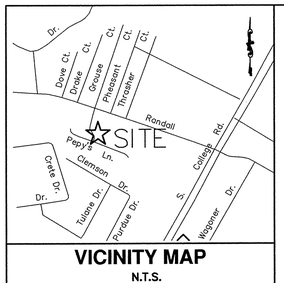

VICINITY MAP
N.T.S.

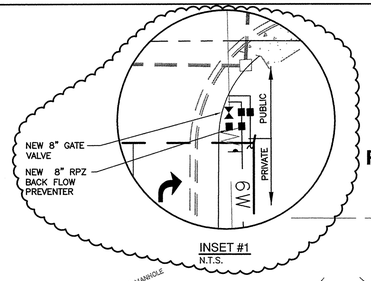

INSET #1
N.T.S.

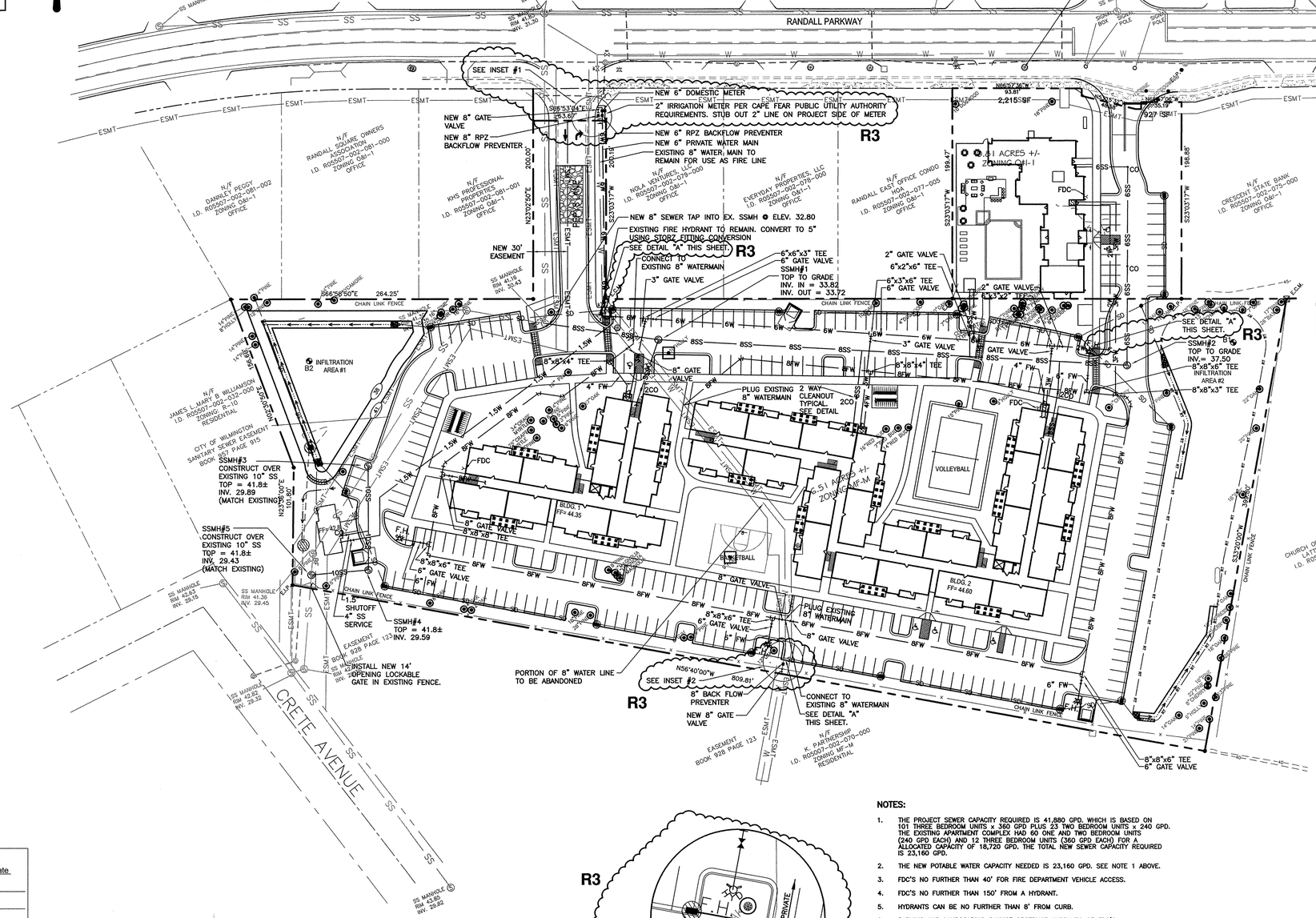

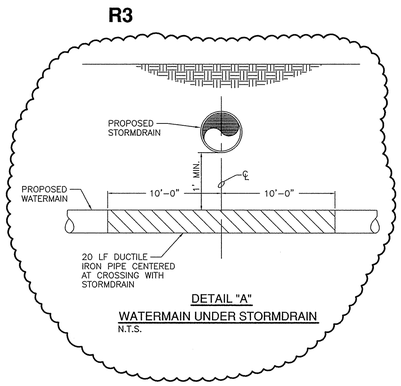

DETAIL "A"
WATERMAIN UNDER STORMDRAIN
N.T.S.

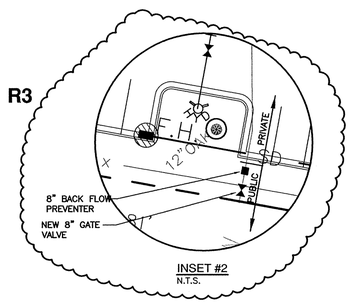

INSET #2
N.T.S.

NOTES:

1. THE PROJECT SEWER CAPACITY REQUIRED IS 41,880 GPD. WHICH IS BASED ON 101 THREE BEDROOM UNITS x 360 GPD PLUS 23 TWO BEDROOM UNITS x 240 GPD. THE EXISTING APARTMENT COMPLEX HAD 60 ONE AND TWO BEDROOM UNITS (240 GPD EACH) AND 12 THREE BEDROOM UNITS (360 GPD EACH) FOR A ALLOCATED CAPACITY OF 18,720 GPD. THE TOTAL NEW SEWER CAPACITY REQUIRED IS 23,160 GPD.
2. THE NEW POTABLE WATER CAPACITY NEEDED IS 23,160 GPD. SEE NOTE 1 ABOVE.
3. FDC'S NO FURTHER THAN 40' FOR FIRE DEPARTMENT VEHICLE ACCESS.
4. FDC'S NO FURTHER THAN 150' FROM A HYDRANT.
5. HYDRANTS CAN BE NO FURTHER THAN 8' FROM CURB.
6. PARKING AND LANDSCAPING CANNOT OBSTRUCT HYDRANTS OF FDC'S.
7. NEW HYDRANTS MUST BE OPERATIONAL PRIOR TO COMBUSTIBLE MATERIALS BROUGHT ONTO THE CONSTRUCTION SITE.
8. AN ALL WEATHER DRIVING SURFACE MUST BE MAINTAINED FOR EMERGENCY VEHICLE ACCESS AT ALL TIMES DURING CONSTRUCTION.
9. ALL PRIVATE FIRE LINES WILL REQUIRE A SEPARATE PERMIT FROM WILMINGTON FIRE AND LIFE SAFETY 910-343-0696 FOR FURTHER INFORMATION.

SCALE: 1" = 50'
0 50 100 150

LEGEND

	PROPERTY LINE
	RIGHT OF WAY
SD	PROPOSED STORM DRAIN
1.5W	PROPOSED 1.5" WATER LINE
2W	PROPOSED 2" WATER LINE
3W	PROPOSED 3" WATER LINE
4W	PROPOSED 4" WATER LINE
6W	PROPOSED 6" WATER LINE
8FW	PROPOSED 8" FIRE LINE
4SS	PROPOSED 4" SANITARY SEWER
6SS	PROPOSED 6" SANITARY SEWER
8SS	PROPOSED 8" SANITARY SEWER
10SS	PROPOSED 10" SANITARY SEWER
ESMT	EXISTING EASEMENT
ESMT	PROPOSED EASEMENT
8SS 2CO	2 WAY CLEANOUT. SEE DETAIL SHEET C7
F.H.	NEW FIRE HYDRANT
	EXISTING TREE TO BE SAVED

Approved Construction Plan

	Name	Date
Planning		
Traffic		
Fire		

For each open utility cut of City streets, a $325 permit shall be required from the City prior to occupancy and/or project acceptance.

1 inch

STORMWATER MANAGEMENT PLAN
APPROVED
CITY OF WILMINGTON
ENGINEERING DEPARTMENT
DATE _____ PERMIT # _____
SIGNED_____

SYMBOL	DATE	DESCRIPTION	BY
R1	03/07/13	REVISED OWNER INFORMATION AND PROJECT NAME	JPN
R2	03/27/13	REVISED INFILTRATION AREA #1 & #2, REVISED REVISED PARKING LAYOUT, ADDED SSMH #12, RELOCATED Cuf11, Cuf13 AND Cuf14, REMOVED SECTION OF SD PIPE	JPN
R3	05/08/13	ADDED IRRIGATION METER AND LINE, ADDED DETAIL "A", ADDED INSET #1 & #2	JPN

REVISIONS

© 2013 NORRIS & TUNSTALL

UTILITY PLAN
THE LIGHTHOUSE APARTMENTS
4926 RANDALL PARKWAY
WILMINGTON, NORTH CAROLINA

OWNER:
RB-WILMINGTON, LLC
A DELAWARE LIMITED LIABILITY COMPANY
2234 W. NORTH AVE.
CHICAGO, IL 60647

NORRIS & TUNSTALL
CONSULTING ENGINEERS, P.C.
1127 FLORAL PARKWAY, SUITE 400
WILMINGTON, NC, 28403
N&T LICENSE NO. C-3641
PHONE (910) 343-9653
FAX (910) 343-9604

12080

DES.	JPN
CKD.	JPN
DRWN.	EDB
DATE	03/07/13

NORTH CAROLINA PROFESSIONAL SEAL 11966 ENGINEER JOHN PHILLIP NORRIS 03/07/13

C5

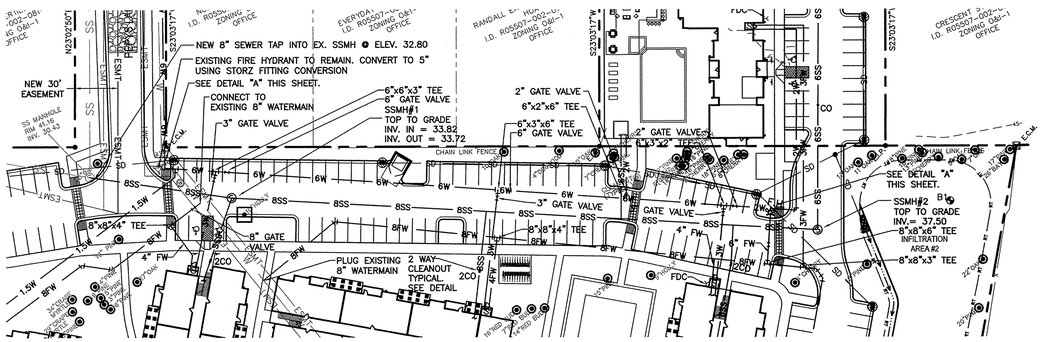

PLAN

SCALE: 1" = 50'

0 50 100 150

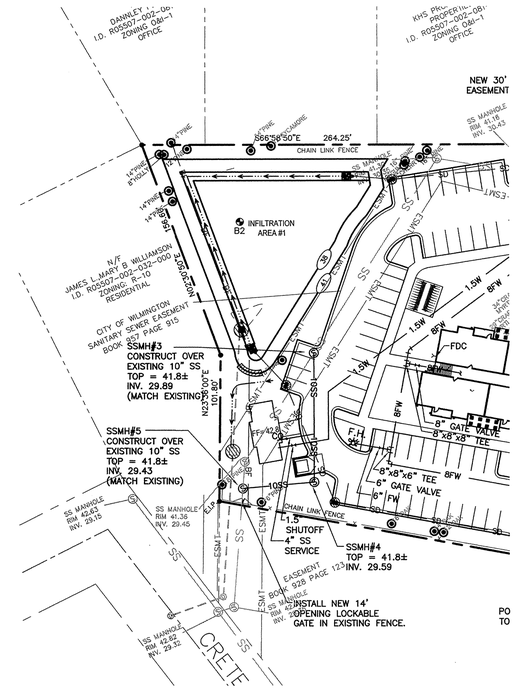

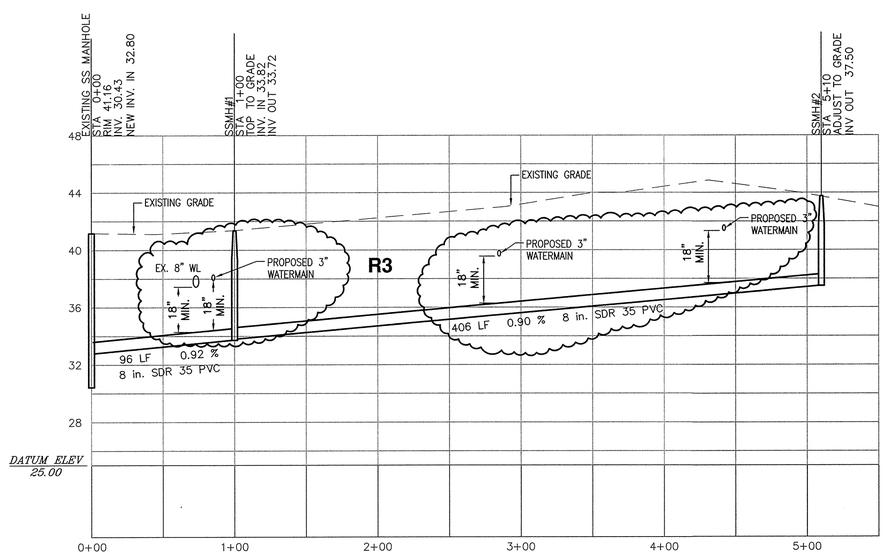

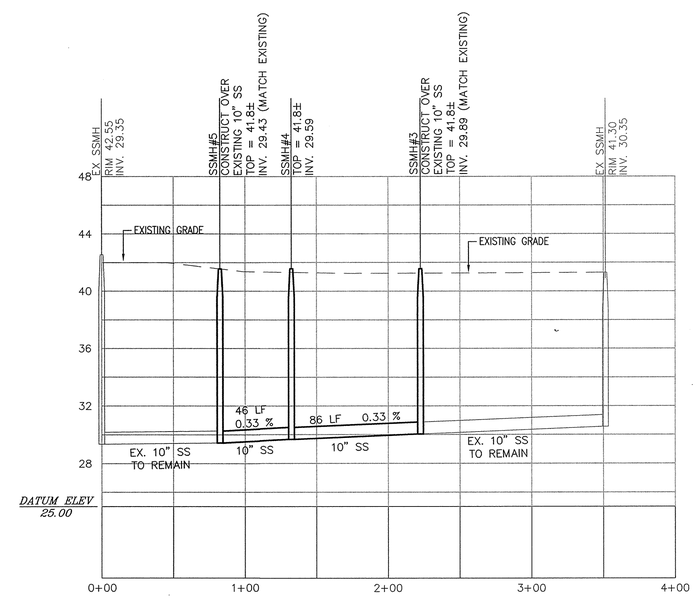

PROFILE

SCALES:
1" = 50' HOR.
1" = 5' VER.

SYMBOL	DATE	DESCRIPTION	BY
R3	05/08/13	ADDED WATERMAIN CROSSINGS TO PROFILE	JPN
R2	03/27/13	REVISED INFILTRATION AREA #1 & #2, REVISED REVISED PARKING LAYOUT, ADDED SSMH #12, RELOCATED C@11, C@13 AND C@14, REMOVED SECTION OF SD PIPE	JPN
R1	03/07/13	REVISED OWNER NAMES AND PROJECT ADDRESS	JPN

REVISIONS

© 2013 NORRIS & TUNSTALL

SEWER PLAN & PROFILE
THE LIGHTHOUSE APARTMENTS
4926 RANDALL PARKWAY
WILMINGTON, NORTH CAROLINA

OWNER:
RB-WILMINGTON, LLC
A DELAWARE LIMITED LIABILITY COMPANY
2234 W. NORTH AVE.
CHICAGO, IL 60647

NORRIS & TUNSTALL
CONSULTING ENGINEERS, P.C.
1127 FLORAL PARKWAY, SUITE 400 PHONE (910) 343-9653
WILMINGTON, NC. 28403 FAX (910) 343-9604
N&T LICENSE NO. C-3641

12080

DES. JPN
CKD. JPN
DRWN. EDB
DATE 03/07/13

NORTH CAROLINA PROFESSIONAL ENGINEER SEAL 11966 05/06/13 JOHN PHILLIP NORRIS

C6

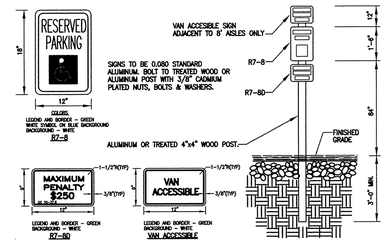

TYPICAL HANDICAPPED SIGN DETAIL
NTS

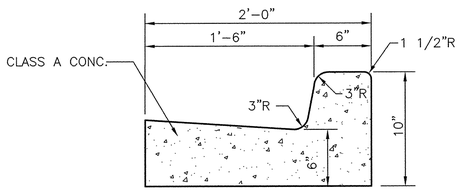

24" FLOW LINE CURB SECTION
NTS

NOTE: CURB TYPE DEPENDS ON GRADES SHOWN ON GRADING PLAN. GRADES INDICATING FALL AWAY FROM CURB SHALL BE SPILL OFF TYPE CURB. GRADES INDICATING CURB ACCEPTING FLOW SHALL BE FLOW LINE TYPE.

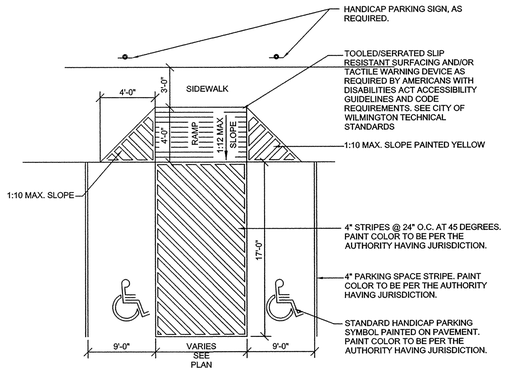

HANDICAP PARKING DETAIL
NTS

NOTE:
1. ALL HANDICAPPED RAMP AND ACCESS AISLES SHALL MEET ALL CODES AND ADAAG REGULATIONS.
2. PAVEMENT MARKINGS, SIGNS OR OTHER TRAFFIC CONTROL DEVICES SHALL CONFORM TO THE LATEST EDITION AND/OR INTERPRETATION OF THE MANUAL ON UNIFORM TRAFFIC CONTROL DEVICES (MUTCD)

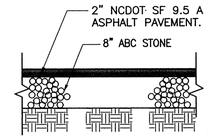

PAVEMENT SECTION
NTS

TEMPORARY/PERMANENT
GRASS SPECIFICATION

1. CHISEL COMPACTED AREAS AND SPREAD TOPSOIL 3 INCHES DEEP OVER ADVERSE SOIL CONDITIONS.
2. RIP THE ENTIRE AREA TO A 6 INCH DEPTH.
3. REMOVE ALL ROCKS, ROOTS AND OTHER OBSTRUCTIONS LEAVING SURFACES SMOOTH AND UNIFORM.
4. APPLY AGRICULTURAL LIME AND FERTILIZER UNIFORMLY AND MIX WITH SOIL.
   LIME: 45 LBS. PER 1000 S.F.
   PHOSPHOROUS: 20 LBS PER 1000 S.F.
   FERTILIZER: 17 LBS. PER 1000 S.F.
5. CONTINUE TILLAGE UNTIL A WELL PULVERIZED, FIRM, UNIFORM SEED BED IS PREPARED 4–6 INCHES DEEP.
6. SEED ON A FRESHLY PREPARED SEED BED AND COVER SEED LIGHTLY.
   2 – 3 LBS PER 1000 S.F. (SEE MIXTURE BELOW)
7. MULCH IMMEDIATELY AFTER SEEDING AND ANCHOR MULCH.
   GRAIN STRAW & HAY AT 75 TO 100 LBS PER 1000 S.F.
   WOOD CHIPS AT 500 LBS. PER 1000 S.F.
   JUTE & MESH AS PER MANUFACTURER
8. ASPHALT FOR ANCHORING MULCH SHALL BE TYPE SS–1 EMULSION AND APPLIED AT A RATE OF 1000 GAL. PER ACRE FOR SLOPE STABILIZATION, AND 150 GAL. PER TON OF STRAW FOR ANCHORING STRAW.
9. INSPECT ALL SEEDED AREAS AND MAKE NECESSARY REPAIRS OR RESEED WITHIN THE PLANTING SEASON, IF POSSIBLE. IF GRASS STAND SHOULD BE OVER 60% DAMAGED, REESTABLISH FOLLOWING ORIGINAL LIME, FERTILIZER AND SEEDING RATES.
10. CONSULT CONSERVATION INSPECTOR ON MAINTENANCE, TREATMENT, AND FERTILIZATION AFTER PERMANENT COVER IS ESTABLISHED.
11. SEED FOR TEMPORARY AND PERMANENT APPLICATIONS SHALL BE:
    20% CARPET GRASS
    24% BERMUDA GRASS
    20% TURF FESCUE 10% CREEPING RED FESCUE
    24% ANNUAL RYE GRAIN
    *BERMUDA SEED SHALL BE HULLED FOR WARM WEATHER PLANTING. PURITY OF SEED SHALL BE A MIN. OF 98% AND GERMINATION SHALL BE A MIN. OF 85%.

ALL DISTURBED AREA SHALL BE SEEDED WITHIN 15 DAYS OF THE COMPLETION OF GRADING. CONSULT CONSERVATION ENGINEER OR SOIL CONSERVATION SERVICE FOR ADDITIONAL INFORMATION CONCERNING OTHER ALTERNATIVES FOR VEGETATION OF DENUDED AREAS. THE ABOVE VEGETATION RATES ARE THOSE WHICH DO WELL UNDER LOCAL CONDITIONS, OTHER SEEDING SCHEDULES MAY BE POSSIBLE.

NPDES STABILIZATION TIMEFRAMES

SITE AREA DESCRIPTION	STABILIZATION	TIMEFRAME EXCEPTIONS
PERIMETER DIKES, SWALES, DITCHES AND SLOPES	7 DAYS	NONE
HIGH QUALITY WATER (HQW) ZONES	7 DAYS	NONE
SLOPES STEEPER THAN 3:1	7 DAYS	IF SLOPES ARE 10' OR LESS IN LENGTH AND ARE NOT STEEPER THAN 2:1, 14 DAYS ARE ALLOWED
SLOPES 3:1 OR FLATTER	14 DAYS	7 DAYS FOR SLOPES GREATER THAN 50' IN LENGTH
ALL OTHER AREAS WITH SLOPES FLATTER THAN 4:1	14 DAYS	NONE, EXCEPT FOR PERIMETERS AND HQW ZONES

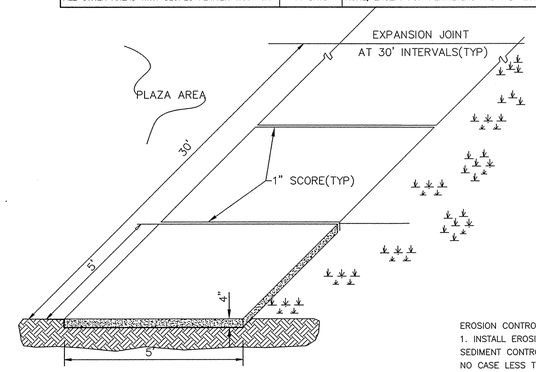

STANDARD SIDEWALK DETAIL
NTS SD 8–15

1. THE CONTRACTOR SHALL VISIT THE SITE TO BECOME FAMILIARIZED WITH FIELD CONSTRUCTION CONDITIONS.
2. THE CONTRACTOR SHALL COORDINATE WORK WITHIN NCDOT AND LOCAL RIGHT OF WAYS WITH PROPER AUTHORITIES AND SHALL MEET ANY REQUIREMENTS AS TO TRAFFIC CONTROL AND CONNECTION TO EXISTING STREETS.
3. CLEARING AND GRUBBING: REMOVE ALL TREES AS REQUIRED UNLESS OTHERWISE NOTED TO REMAIN, STUMPS, ROOTS, SHRUBBERY, ASPHALT, CONCRETE, STRUCTURES, BURIED UTILITIES, STORAGE TANKS, ETC. WITHIN LIMITS OF CONSTRUCTION.
4. STRIPPING: BEFORE EXCAVATING OR FILLING, REMOVE ALL TOPSOIL, WOOD, LEAVES, AND ANY OTHER UNSUITABLE MATERIAL.
5. MUCKING: REMOVE ANY SOFT, ORGANIC SILT MATERIALS AND EXISTING BURIED CONSTRUCTION DEBRIS AS REQUIRED AND FILL TO SUBGRADE ELEVATIONS WITH A CLEAN SELECT–FILL COMPACTED AS SPECIFIED.
6. DISPOSAL: CLEARED, GRUBBED, STRIPPED OR EXCAVATED SPOIL SHALL BE REMOVED FROM SITE AND DISPOSED OF IN ACCORDANCE WITH ALL APPLICABLE LOCAL AND STATE CODES.
7. BORROW MATERIAL: THE SITE WORK CONTRACTOR SHALL FURNISH BORROW MATERIAL REQUIRED FROM OFF SITE AND OBTAIN ALL REQUIRED PERMITS ASSOCIATED WITH BORROW OPERATIONS.
8. FILL AND COMPACTION: AFTER STRIPPING, THOSE AREAS DESIGNATED TO RECEIVE FILL SHOULD BE PROOFROLLED WITH A 10–TON VIBRATORY STEEL WHEELED ROLLER TO COMPACT THE TOP 8" TO AT LEAST 98% OF MAXIMUM DENSITY AT OPTIMUM MOISTURE CONTENT. ANY AREA WHICH PUMPS OR RUTS EXCESSIVELY SHOULD BE UNDERCUT AND REPLACED WITH A CLEAN, SILTY OR CLAYEY SAND HAVING A UNIFIED SOIL CLASSIFICATION OF SP, SM, OR SC. FILL MATERIAL 5' OUTSIDE OF BUILDING AREAS SHALL THEN BE PLACED IN LAYERS NOT TO EXCEED 8" AND COMPACTED TO AT LEAST 95% OF THE STANDARD PROCTOR MAXIMUM DRY DENSITY (ASTM D–698) WITH THE UPPER 12 INCHES OF SUBGRADE BEING COMPACTED TO 98% OF THE STANDARD PROCTOR MAXIMUM DRY DENSITY. FILL MATERIALS WITHIN BUILDING AREAS TO A LINE OUTSIDE THE BUILDING AREAS SHALL BE PLACED IN LAYERS NOT TO EXCEED 8" AND COMPACTED TO AT LEAST 98% OF THE STANDARD PROCTOR MAXIMUM DRY DENSITY (ASTM D–698) WITH THE UPPER 12 INCHES OF SUBGRADE BEING COMPACTED IN 6 INCH LAYERS TO 100% OF THE STANDARD PROCTOR MAXIMUM DRY DENSITY. IN AREAS WHERE NO STRUCTURAL FILL IS TO BE PLACED THE UPPER 12 INCHES OF IN–PLACE SUBGRADE SHOULD BE COMPACTED TO AT 98% OF THE STANDARD PROCTOR MAXIMUM DRY DENSITY. IF THE MATERIAL IS TOO DRY TO COMPACT TO THE REQUIRED DENSITY EACH LAYER SHALL BE WETTED IN ACCORDANCE WITH COMPACTION REQUIREMENTS. IF THE MATERIAL IS TOO WET TO SECURE PROPER COMPACTION, IT SHALL BE HARROWED REPEATEDLY OR OTHERWISE AERATED WITH SUITABLE EQUIPMENT UNTIL OPTIMUM MOISTURE CONTENT IS OBTAINED. FILL SHALL BE PLACED IN SUCH A MANNER THAT THE SURFACE WILL DRAIN READILY AT ALL TIMES. SEE STRUCTURAL NOTES AND SOILS REPORT FOR ADDITIONAL REQUIREMENTS.
9. LAYOUT: THE CONTRACTOR SHALL PROVIDE ALL LAYOUT REQUIRED TO CONSTRUCT HIS WORK.
10. THE CONTRACTOR IS RESPONSIBLE FOR THE LOCATION AND PROTECTION OF EXISTING UTILITIES DURING CONSTRUCTION.
11. EXISTING BOUNDARY, TOPOGRAPHIC AND TREE SURVEY INFORMATION FROM SURVEY BY MICHAEL UNDERWOOD & ASSOCIATES, AND PROVIDED BY OWNER.
12. THE CONTRACTOR SHALL VERIFY DIMENSIONS AT JOBSITE.
13. THE CONTRACTOR IS RESPONSIBLE FOR THE COORDINATION OF RELOCATION OR DISCONNECTION OF ALL EXISTING UTILITIES WITH APPLICABLE AGENCIES AND AUTHORITIES.
14. ALL PAVEMENT AND BASE MATERIALS AND WORKMANSHIP SHALL CONFORM TO NCDOT STANDARDS.
15. WATER AND SEWER SERVICES SHALL BE INSTALLED TO MEET LOCAL AND STATE PLUMBING CODES. METER AND TAPS SHALL MEET ALL LOCAL REQUIREMENTS.
16. ALL AREAS SHALL BE GRADED FOR POSITIVE DRAINAGE.
17. THE CONTRACTOR SHALL NOTE THAT EARTHWORK QUANTITIES ARE HIS RESPONSIBILITY. PLANS DO NOT REPRESENT A BALANCED EARTHWORK CONDITION.

EROSION CONTROL NOTES AND MAINTENANCE PLAN:
1. INSTALL EROSION CONTROL MEASURES BEFORE BEGINNING CONSTRUCTION OR AS SOON THEREAFTER AS POSSIBLE. ALL EROSION AND SEDIMENT CONTROL PRACTICES WILL BE CHECKED FOR STABILITY AND OPERATION FOLLOWING EVERY RUNOFF–PRODUCING RAINFALL BUT IN NO CASE LESS THAN ONCE EVERY WEEK. ANY NEEDED REPAIRS WILL BE MADE IMMEDIATELY TO MAINTAIN ALL PRACTICES AS DESIGNED.
2. MAINTAIN THE GRAVEL CONSTRUCTION ENTRANCES IN A CONDITION TO PREVENT MUD OR SEDIMENT FROM LEAVING THE CONSTRUCTION SITE. THE CONTRACTOR SHALL INSPECT THE CONSTRUCTION ENTRANCES ON A DAILY BASIS. THIS WILL REQUIRE PERIODIC TOP DRESSING WITH ADDITIONAL NO. 4 STONE. ANY OBJECTIONABLE MATERIALS SPILLED, WASHED, OR TRACKED ONTO PUBLIC ROADWAYS SHALL BE REMOVED IMMEDIATELY.
3. SEDIMENT WILL BE REMOVED FROM THE SEDIMENT TRAP AND BLOCK AND GRAVEL INLET PROTECTION DEVICE WHEN STORAGE CAPACITY HAS BEEN APPROXIMATELY 50% FILLED. GRAVEL WILL BE CLEANED OR REPLACED WHEN THE SEDIMENT POOL NO LONGER DRAINS PROPERLY.
4. INSTALL EROSION CONTROL MEASURES AROUND THE DROP INLETS AS SHOWN ON THE PLANS TO TRAP SILT DURING CONSTRUCTION. INSPECT THE EROSION CONTROL AROUND THE INLETS AFTER EACH RAIN AND MAKE REPAIRS IMMEDIATELY. REMOVE SEDIMENT WHEN IT BECOMES 0.50' DEEP TO PROVIDE ADEQUATE STORAGE VOLUME FOR SUBSEQUENT RAINS. WHEN THE CONTRIBUTING DRAINAGE AREA HAS BEEN ADEQUATELY STABILIZED, REMOVE ALL MATERIALS AND ANY UNSTABLE SOIL AND EITHER SALVAGE OR DISPOSE OF IT PROPERLY. BRING THE DISTURBED AREA TO PROPER GRADE AND APPROPRIATELY STABILIZE ALL BARE AREAS AROUND THE DROP INLETS.
5. SEDIMENT WILL BE REMOVED FROM BEHIND THE SILT FENCE WHEN IT BECOMES 0.5 FT DEEP AT THE FENCE. THE SEDIMENT FENCE WILL BE REPAIRED AS NECESSARY TO MAINTAIN A BARRIER.
6. SEDIMENT BASINS ARE TO BE CLEANED OUT WHEN THE DESIGN STORAGE CAPACITY HAS BEEN ½ FILLED WITH SEDIMENT. ROCK WILL BE CLEANED OR REPLACED WHEN THE SEDIMENT POOL NO LONGER DRAINS OR IF THE ROCK IS DISLODGED.
7. NO CUT OR FILL SLOPES SHALL EXCEED A SIDE SLOPE OF 1 VERTICAL TO 3 HORIZONTAL UNLESS OTHERWISE SPECIFIED ON THE PLAN. ALL SLOPES SHALL BE SEEDED AND STABILIZED WITHIN 21 CALENDAR DAYS.
8. ALL DISTURBED AREAS SHALL BE SEEDED WITHIN 15 WORKING DAYS OF DISTURBANCE. ALL SEEDED AREAS WILL BE FERTILIZED, RESEEDED AS NECESSARY, AND MULCHED ACCORDING TO SPECIFICAITONS IN THE VEGETATIVE PLAN TO MAINTAIN A VIGOROUS, DENSE VEGETATIVE COVER.
9. MORE STRINGENT MEASURES SHALL BE USED TO HALT EROSION IF THOSE SHOWN ON THIS PLAN ARE NOT EFFECTIVE.
10. ALL EROSION SHALL BE CONTROLLED INCLUDING SIDE SLOPES BEFORE THE PROJECT IS COMPLETED.
11. REMOVE TEMPORARY MEASURES UPON COMPLETION OF PROJECT. ALL PERMANENT MEASURES WILL BE WELL ESTABLISHED BEFORE PROJECT

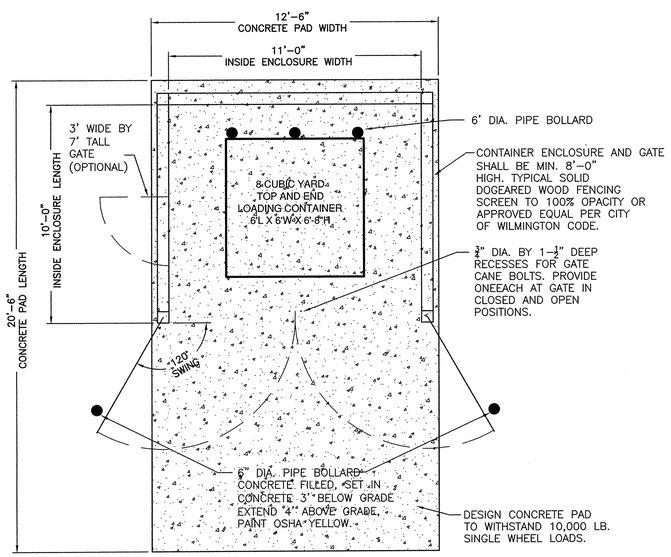

CONTAINER ENCLOSURE PLAN
NTS

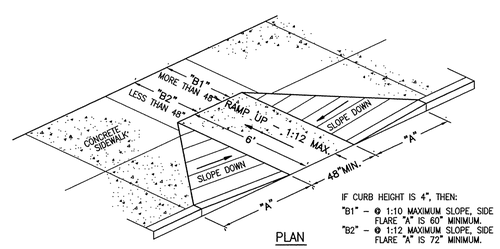

PLAN

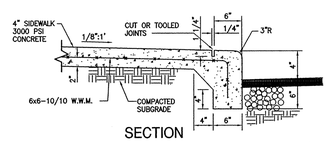

SECTION
TURNED DOWN CONCRETE SIDEWALK CONTROL JOINT

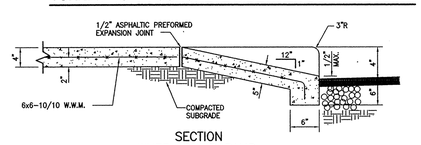

SECTION
WHEEL CHAIR RAMP

TYPICAL TURNED DOWN SIDEWALK
AND WHEEL CHAIR RAMP DETAIL
NTS

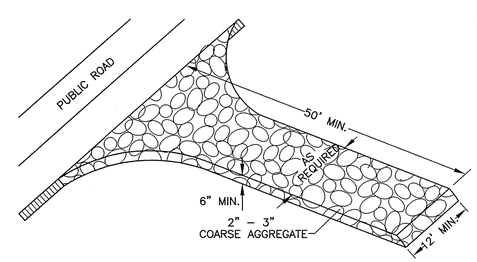

TEMPORARY GRAVELLED
CONSTRUCTION ENTRANCE
NTS

For each open utility cut of City streets, a $325 permit shall be required from the City prior to occupancy and/or project acceptance.

Approved Construction Plan

	Name	Date
Planning		
Traffic		
Fire		

1 inch

STORMWATER MANAGEMENT PLAN
APPROVED
CITY OF WILMINGTON
ENGINEERING DEPARTMENT
DATE _____ PERMIT # _____
SIGNED _____

SYMBOL	DATE	DESCRIPTION	BY
R2	04/11/13	REVISED NOTES ADDED HC PARKING DETAIL MOVED SOME DETAILS TO SHEET C7.	JPN
R1	03/07/13	REVISED OWNER NAMES AND PROJECT ADDRESS	JPN

REVISIONS

©2013 NORRIS & TUNSTALL

DETAILS
THE LIGHTHOUSE APARTMENTS
4926 RANDALL PARKWAY
WILMINGTON, NORTH CAROLINA

OWNER:
RB-WILMINGTON, LLC
A DELAWARE LIMITED LIABILITY COMPANY
2234 W. NORTH AVE.
CHICAGO, IL 60647

NORRIS & TUNSTALL
CONSULTING ENGINEERS, P.C.
1127 FLORAL PARKWAY, SUITE 400
WILMINGTON, NC, 28403
N&T LICENSE NO. C–3641
PHONE (910) 343–9653
FAX (910) 343–9604

12080

DES. JPN
CKD. JPN
DRWN. EDB
DATE 04/11/13

NORTH CAROLINA PROFESSIONAL SEAL 11966 ENGINEER JOHN PHILLIP NORRIS

C7

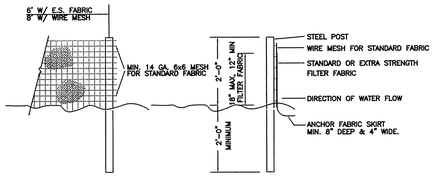

NOTES:

1. SYN. FENCE FABRIC SHALL BE MIN. OF 30" IN WIDTH WITH 30 LB/IN TENSILE STRENGTH FOR STANDARD FABRIC AND 50 LB/IN FOR EXTRA STRENGTH.
2. FABRIC SHALL BE CONTINUOUS LENGTH. IF JOINTS ARE NECESSARY, LAP FABRIC POST TO POST.
3. STEEL POST SHALL BE MIN 4' IN HEIGHT AND BE OF THE SELF-FASTENER STEEL ANGLE TYPE.

TEMPORARY SILT FENCE

NTS

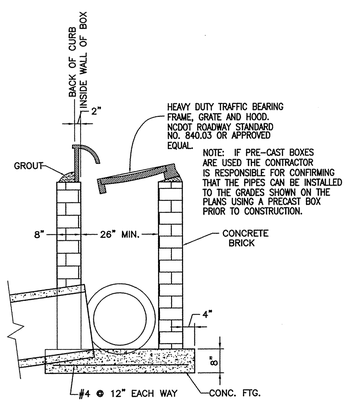

TYPICAL CATCH BASIN

24" CURB AND GUTTER NTS

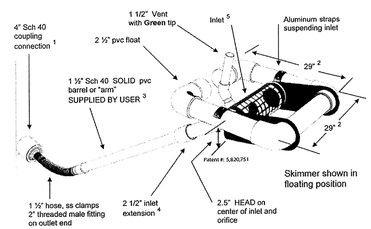

1. Skimmer can be attached to a straight 4" sch 40 pipe through the dam but the pipe may need to be anchored to the bottom at the connection so it is secure. Coupling can be removed and hose attached to outlet using the threaded 2" fitting. Typical methods used: on a metal structure a steel stubout welded on the side at the bottom with a 2" threaded coupling or reducers; on a concrete structure with a hole or orifice at the bottom, use a steel plate with a hole cut in it and coupling welded to it that will fit over the hole in the concrete and bolted to the structure with sealant: grout a 4" pvc pipe in a hole in the concrete to connect the skimmer.
2. Dimensions are approximate, not intended as plans for construction.
3. Barrel (solid, not foam core pipe) should be 1.4 times the depth of water with a minimum length of 6' so the inlet can be pulled to the side for maintenance. If more than 8' long weight may have to be added to inlet to counter the increased buoyancy.
4. Inlet tapers down from 2 1/2" maximum inlet to a 1 1/2" barrel and hose. Barrel is smaller to reduce buoyancy and tendency to lift inlet but is sufficient for flow through inlet because of slope. The inlet orifice can be reduced using the plug and cutter provided to control the outflow rate.
5. Inlet is 5" pipe between the straps with aluminum screen door for access to the 2 1/2" inlet and orifice inside.
6. **Capacity** 6,234 cubic feet per day maximum with 2 1/2" inlet and 2.5 head. Inlet can be reduced by installing a smaller orifice using the plug and cutter provided to adjust flow rate for the particular basin volume and drawdown time required.
7. Shipped assembled. User glues inlet extension and barrel, installs vent, cuts orifice in plug and attaches to outlet pipe or structure. Includes flexible hose, rope, orifice cutter, etc.

2.5" FAIRCLOTH SKIMMER DETAIL

NTS

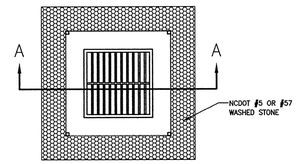

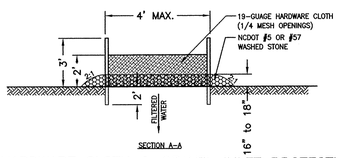

HARDWARE CLOTH & GRAVEL INLET PROTECTION

NTS

CONSTRUCTION SEQUENCE:

1. UNIFORMLY GRADE A SHALLOW DEPRESSION APPROACHING THE INLET.
2. DRIVE 5' STEEL POST 2' INTO THE GROUND SURROUNDING THE INLET. SPACE POST EVENLY AROUND THE PERIMETER OF THE INLET, A MAXIMUM OF 4' APART.
3. SURROUND THE POST WITH WIRE MESH HARDWARE CLOTH. SECURE THE WIRE MESH TO THE STEEL POST AT THE TOP, MIDDLE AND BOTTOM. PLACING A 2' FLAP OF THE WIRE MESH UNDER THE GRAVEL FOR ANCHORING IS RECOMMENDED.
4. PLACE CLEAN GRAVEL (NCDOT #5 OR #57 STONE) ON A 2:1 SLOPE WITH A HEIGHT OF 16" TO 18" AROUND THE WIRE, AND SMOOTH TO AN EVEN GRADE.
5. ONCE THE CONTRIBUTING DRAINAGE AREA HAS BEEN STABILIZED, REMOVE ACCUMULATED SEDIMENT, AND ESTABLISH FINAL GRADING ELEVATIONS.
6. COMPACT THE AREA PROPERLY AND STABILIZE IT WITH GROUNDCOVER.

MAINTENANCE:

INSPECT INLETS AT LEAST WEEKLY AND AFTER EACH SIGNIFICANT (1/2 INCH OR GREATER) RAINFALL EVENT. CLEAR THE MESH WIRE OF ANY DEBRIS OR OTHER OBJECTS TO PROVIDE ADEQUATE FLOW FOR SUBSEQUENT RAINS. TAKE CARE NOT TO DAMAGE OR UNDERCUT THE WIRE MESH DURING SEDIMENT REMOVAL. REPLACE STONE AS NEEDED.

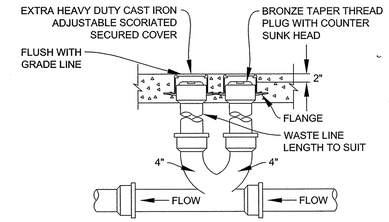

2-WAY CLEAN-OUT DETAIL

NTS

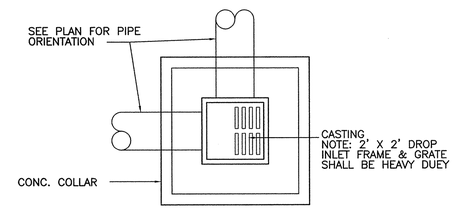

PLAN

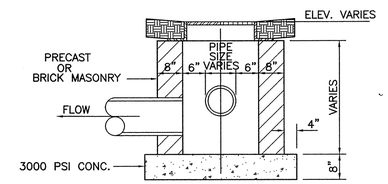

SECTION

DROP INLET DETAIL

SYMBOL	DATE	DESCRIPTION	BY
R1	04/11/13	SHEET CREATED FOR CLARITY	JPN

REVISIONS

© 2013 NORRIS & TUNSTALL

DETAILS
THE LIGHTHOUSE APARTMENTS
4926 RANDALL PARKWAY
WILMINGTON, NORTH CAROLINA

OWNER:
RB-WILMINGTON, LLC
A DELAWARE LIMITED LIABILITY COMPANY
2234 W. NORTH AVE.
CHICAGO, IL 60647

NORRIS & TUNSTALL
CONSULTING ENGINEERS, P.C.
1127 FLORAL PARKWAY, SUITE 400 PHONE (910) 343-9653
WILMINGTON, NC, 28403 FAX (910) 343-9604
N&T LICENSE NO. C-3641

Approved Construction Plan

	Name	Date
Planning		
Traffic		
Fire		

1 inch

STORMWATER MANAGEMENT PLAN
APPROVED
CITY OF WILMINGTON
ENGINEERING DEPARTMENT
DATE _____ PERMIT # _____
SIGNED_____

For each open utility cut of City streets, a $325 permit shall be required from the City prior to occupancy and/or project acceptance.

12080

DES.	JPN
CKD.	JPN
DRWN.	EDB
DATE	04/11/13

NORTH CAROLINA PROFESSIONAL SEAL 19661 ENGINEER JOHN PHILLIP NORRIS

C7.1

NOTE

1. BASIN, FRAME AND GRATE MAY VARY IN NONESSENTIAL DIMENSIONS.

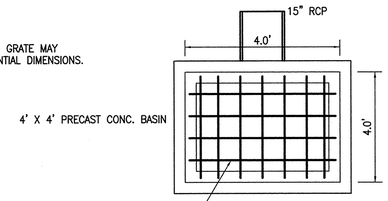

#4 STEEL REBAR (GALV. OR ASPHALT COATED) TACKWELDED AT 4" O.C. EACH WAY. LAID IN OR BOLTED DOWN TO TOP OF STRUCTURE

PLAN

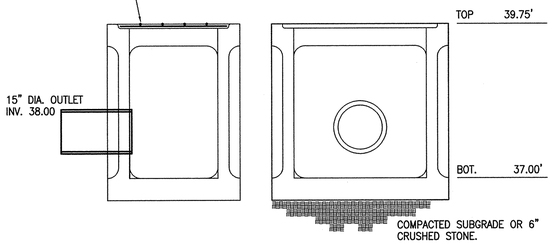

SECTION ELEVATION

INFILTRATION BASIN #1 OUTLET STRUCTURE

N.T.S.

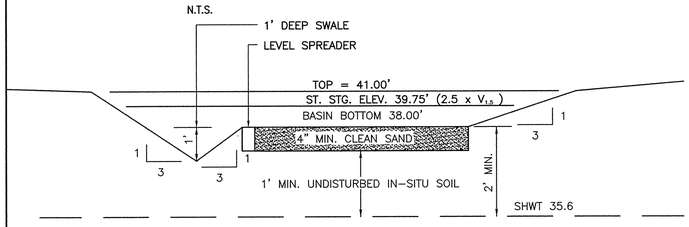

INFILTRATION BASIN #1: CROSS SECTION

NTS

NOTE:

1. PERMANENT ESTABLISHED VEGETATION WILL BE REQUIRED BY THE CITY OF WILMINGTON PRIOR TO ISSUANCE OF A CERTIFICATE OF OCCUPANCY.

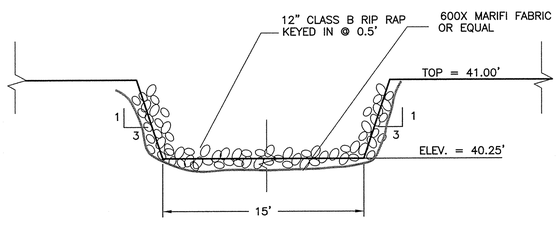

INFILTRATION BASIN #1 EMERGENCY SPILLWAY

NTS

TYPICAL GRASS SWALE

N.T.S.

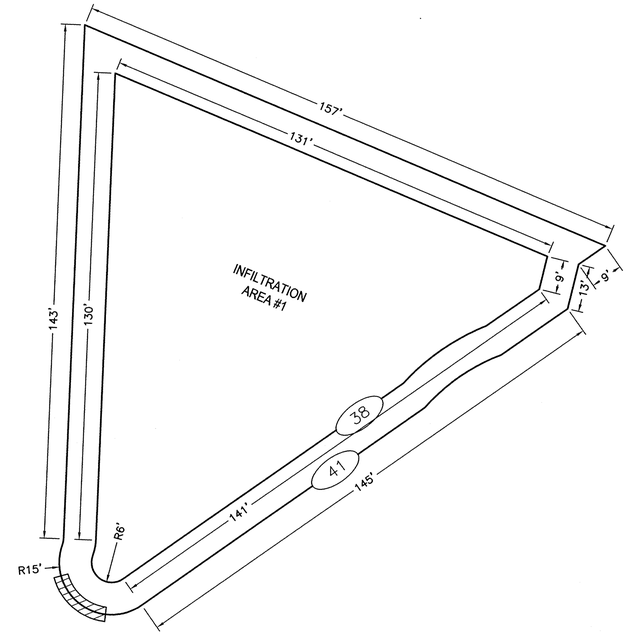

INFILTRATION BASIN #1 DIMENSIONS

SCALE: 1"=20'

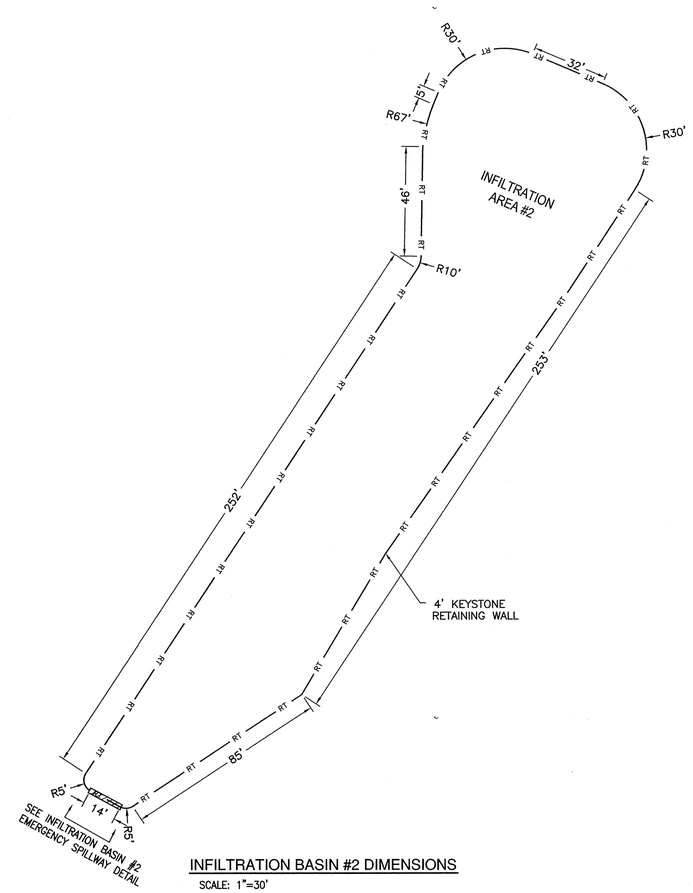

INFILTRATION BASIN #2 DIMENSIONS

SCALE: 1"=30'

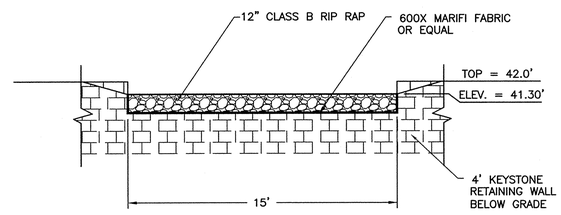

INFILTRATION BASIN #2 EMERGENCY SPILLWAY

NTS

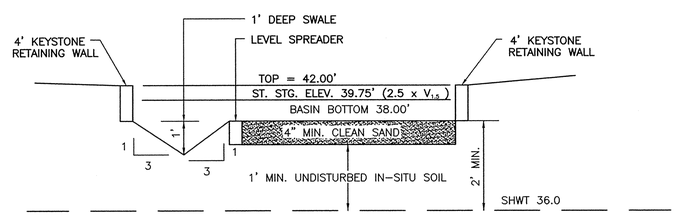

INFILTRATION BASIN #2: CROSS SECTION

NTS

NOTE:

1. PERMANENT ESTABLISHED VEGETATION WILL BE REQUIRED BY THE CITY OF WILMINGTON PRIOR TO ISSUANCE OF A CERTIFICATE OF OCCUPANCY.

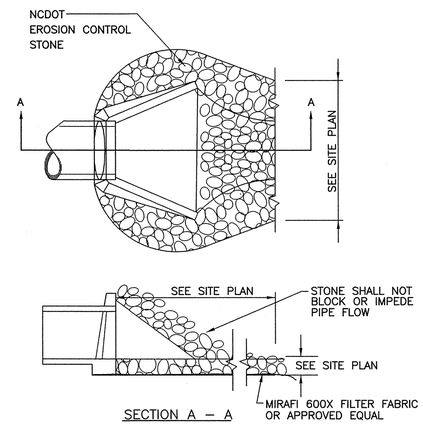

SECTION A – A

NOTE: FILTER FABRIC AND STONE SHALL BE TOED UNDER FLARED END SECTION

ENERGY DISSIPATOR

NTS

For each open utility cut of City streets, a $325 permit shall be required from the City prior to occupancy and/or project acceptance.

1 inch

STORMWATER MANAGEMENT PLAN
APPROVED
CITY OF WILMINGTON
ENGINEERING DEPARTMENT
DATE _____ PERMIT # _____
SIGNED _____

Approved Construction Plan

	Name	Date
Planning		
Traffic		
Fire		

SYMBOL	DATE	DESCRIPTION	BY
R2	03/27/13	REVISED EMERGENCY SPILLWAY DETAILS, INFILTRATION AREA CROSS SECTIONS AND DIMENSIONS	JPN
R1	03/07/13	REVISED OWNER INFORMATION AND PROJECT ADDRESS	JPN

REVISIONS

© 2013 NORRIS & TUNSTALL

POND DETAILS
THE LIGHTHOUSE APARTMENTS
4926 RANDALL PARKWAY
WILMINGTON, NORTH CAROLINA

OWNER:
RB-WILMINGTON, LLC
A DELAWARE LIMITED LIABILITY COMPANY
2234 W. NORTH AVE.
CHICAGO, IL 60647

NORRIS & TUNSTALL
CONSULTING ENGINEERS, P.C.
1127 FLORAL PARKWAY, SUITE 400 PHONE (910) 343-9653
WILMINGTON, NC, 28403 FAX (910) 343-9604
N&T LICENSE NO. C-3641

12080

DES.	JPN
CKD.	JPN
DRWN.	EDB
DATE	03/07/13

NORTH CAROLINA PROFESSIONAL SEAL 11966 03-27-13 ENGINEER JOHN PHILLIP NORRIS

C8

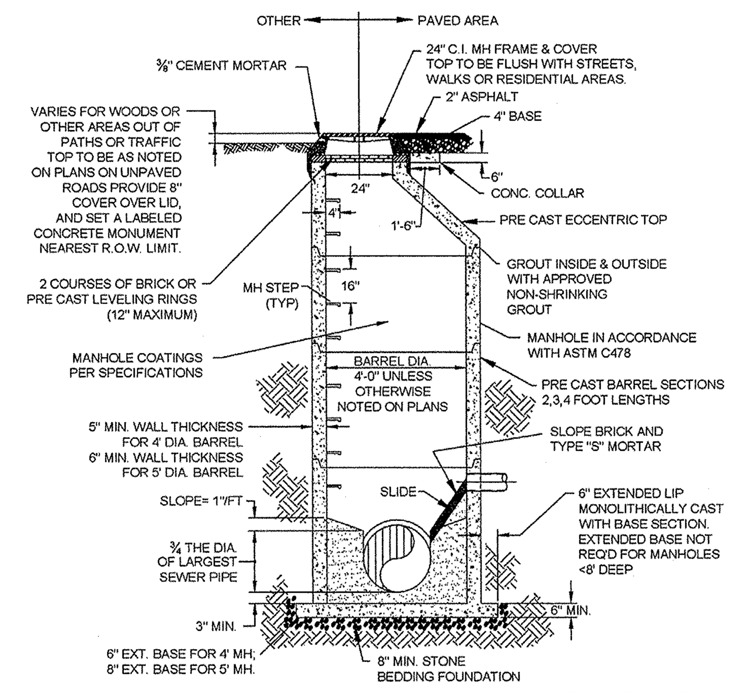

PRECAST CONCRETE OFFSET MANHOLE TYPICAL

(LESS THAN 30" DROP)

NOT TO SCALE

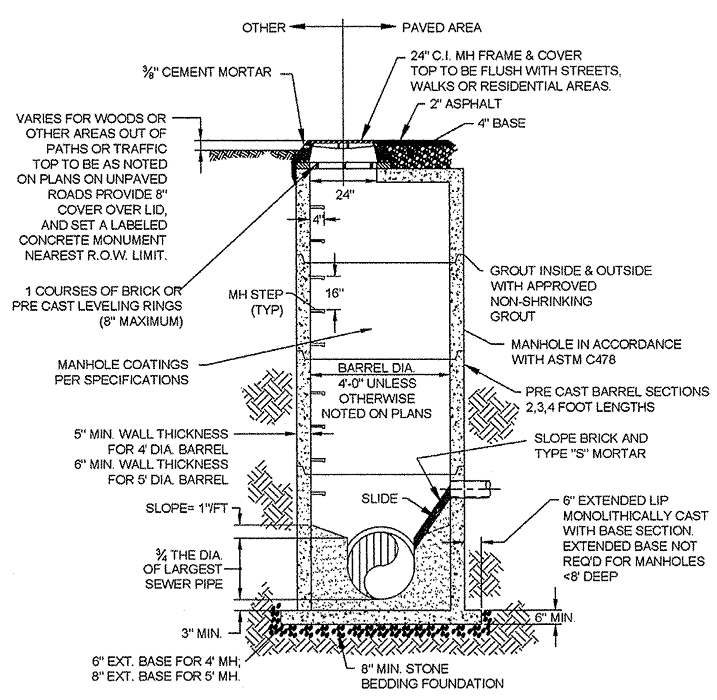

PRECAST CONCRETE FLAT TOP MANHOLE TYPICAL

(LESS THAN 30" DROP)

NOT TO SCALE

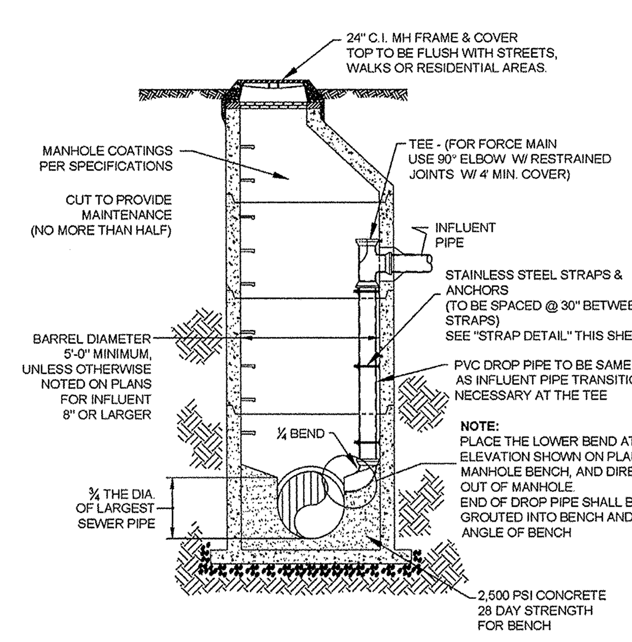

DROP MANHOLE

(MORE THAN 30" DROP)

NOT TO SCALE

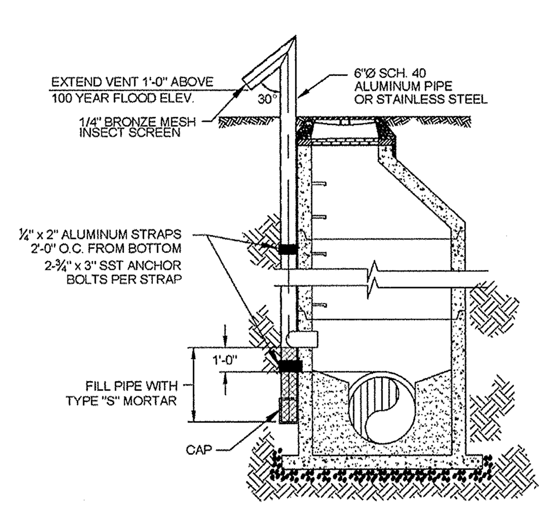

STANDARD VENT MANHOLE

NOT TO SCALE

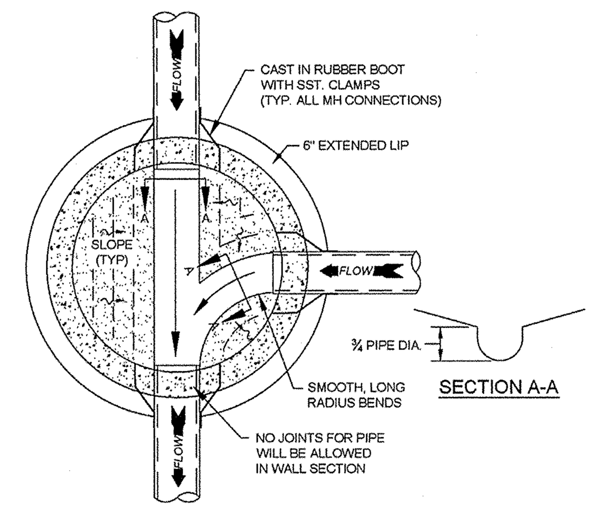

MANHOLE FLOOR PLAN

NOT TO SCALE

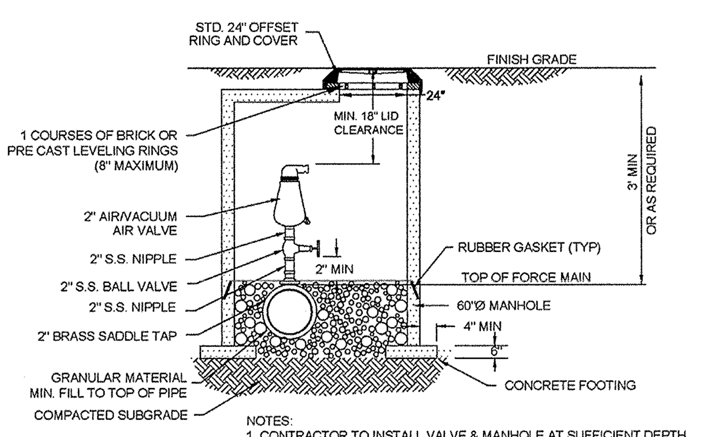

NOTES:
1. CONTRACTOR TO INSTALL VALVE & MANHOLE AT SUFFICIENT DEPTH TO ALLOW FOR ACCESS.
2. FORCE MAIN TO BE OFFSET IN MANHOLE
3. REFER TO SPECIFICATIONS FOR ADDITIONAL DETAILS
4. USE SOLID BASE IN AREAS WITH HISTORICALLY HIGH GROUNDWATER (WITHIN 2' OF FORCE MAIN INVERT)

AIR / VACUUM AND AIR RELEASE COMBINATION VALVE

NOT TO SCALE

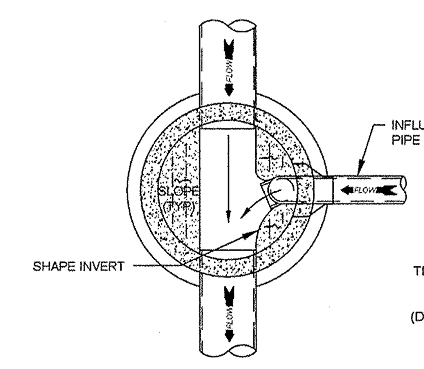

DROP MANHOLE FLOOR PLAN

NOT TO SCALE

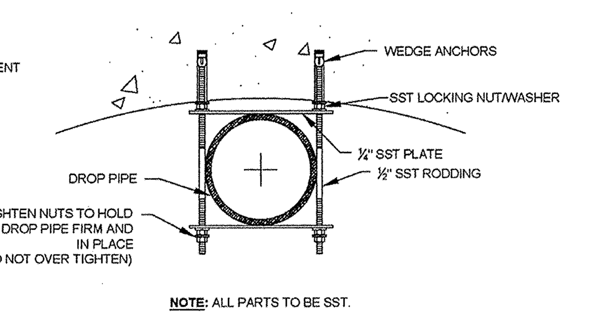

NOTE: ALL PARTS TO BE SST.

STRAP DETAIL

NOT TO SCALE

1. SEWER GUARDS REQUIRED AT ALL MANHOLES. STAINLESS STEEL SEWER GUARDS REQUIRED AT MANHOLES LOCATED IN TRAFFIC AREAS.
2. SERVICES SHALL BE PERPENDICULAR TO MAIN AND TERMINATE AT R/W LINE. SERVICES IN CUL-DE-SACS ARE REQUIRED TO BE PERPENDICULAR, OR MUST ORIGINATE IN MANHOLE AND TERMINATE AT RIGHT-OF-WAY LINE.
3. ALL SERVICES TYING INTO DUCTILE IRON MAINS SHALL BE CONSTRUCTED OF CLASS 50, DIP, WITH PROTECTO 401 CERAMIC EPOXY LINING.
4. MINIMUM 10' UTILITIES EASEMENT PROVIDED ALONG THE FRONTAGE OF ALL LOTS AND AS SHOWN FOR NEW DEVELOPMENTS.
5. NO FLEXIBLE COUPLINGS SHALL BE USED.
6. ALL STAINLESS STEEL FITTINGS SHALL BE 3/16".

STANDARD SEWER NOTES

(REQUIRED ON ALL SEWER PLAN AND PROFILE SHEETS)

GENERAL NOTES:
1. NO EXCAVATED MATERIAL SHALL BE PLACED IN ANY STREAM, DITCH OR DRAINAGE-WAY.
2. THE CONTRACTOR IS RESPONSIBLE FOR LOCATING ALL UNDERGROUND UTILITIES BEFORE ANY CONSTRUCTION BEGINS.
3. THE CONTRACTOR IS RESPONSIBLE FOR TEMPORARY SEDIMENT AND EROSION CONTROL MEASURES WHILE CONSTRUCTION IS IN PROGRESS.
4. THE CONTRACTOR IS RESPONSIBLE FOR STABILIZATION OF ALL DISTURBED AREAS.
5. THE CONTRACTOR IS RESPONSIBLE FOR LAY DOWN & STOCKPILE AREAS (TO ARRANGE AND INSURE COMPLIANCE WITH ALL LOCAL AND STATE REGULATIONS)

THE DETAILS SHOWN HEREON SUPERCEDE CFPUA WRITTEN TECHNICAL SPECIFICATIONS VERSIONS 1.00 - 1.04

REV:	DESCRIPTION:	DATE:

SANITARY SEWER STANDARD DETAILS

SANITARY SEWER STANDARD DETAILS SS-1

CAPE FEAR PUBLIC UTILITY AUTHORITY
235 GOVERNMENT CENTER DRIVE
WILMINGTON, NC 28403
OFFICE: (910)332-6560
Stewardship. Sustainability. Service.

DATE:	1/9/12
SCALE:	N/A
DRAWN BY:	CFPUA
CHECKED BY:	CFPUA
PROJECT NO.:	

SHEET NO: 1/4

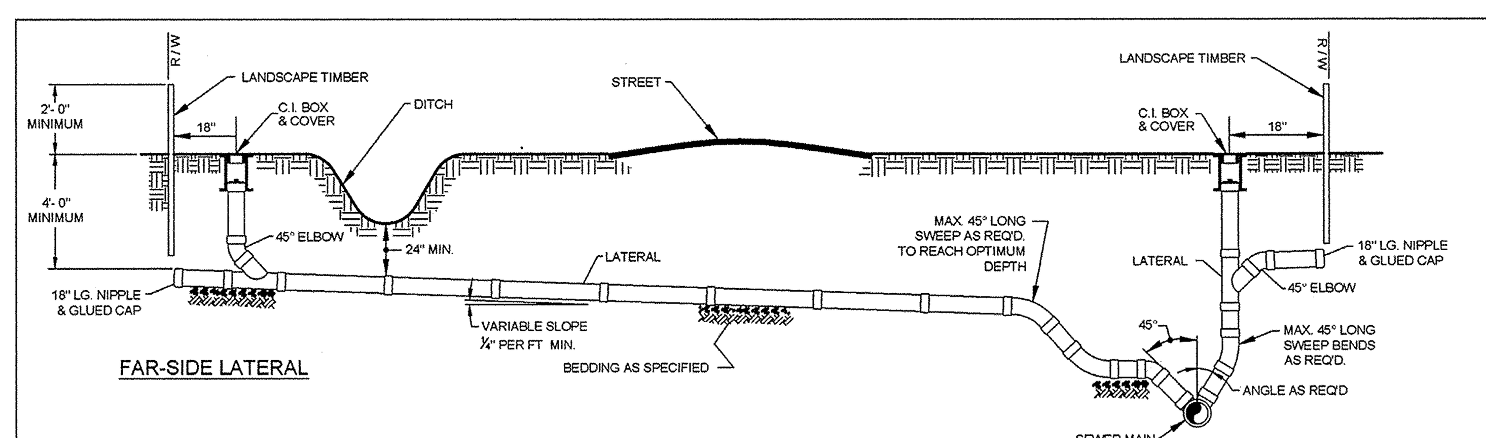

FAR-SIDE LATERAL

NEAR-SIDE LATERAL WITH RIGHT-OF-WAY RESTRICTIONS

NOTE: FOR PRIVATE 8" SERVICES, MANHOLES ARE REQUIRED FOR TIE-IN TO MAIN

STANDARD SERVICE CONNECTION TO SANITARY SEWER

NOT TO SCALE

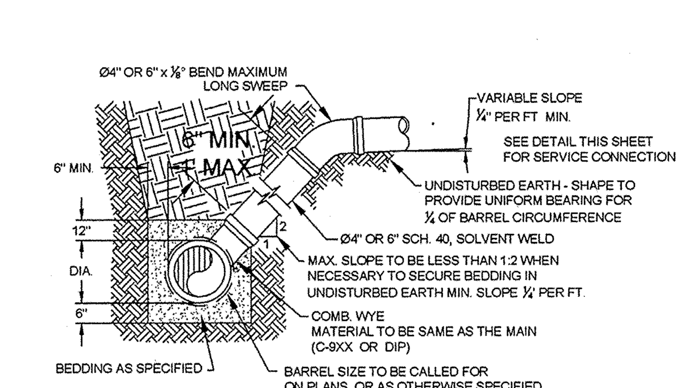

NOTE: FOR PRIVATE 8" SERVICES, MANHOLES ARE REQUIRED FOR TIE-IN TO MAIN

STANDARD SERVICE LATERAL

(MAIN DEPTH LESS THAN 8ft)

NOT TO SCALE

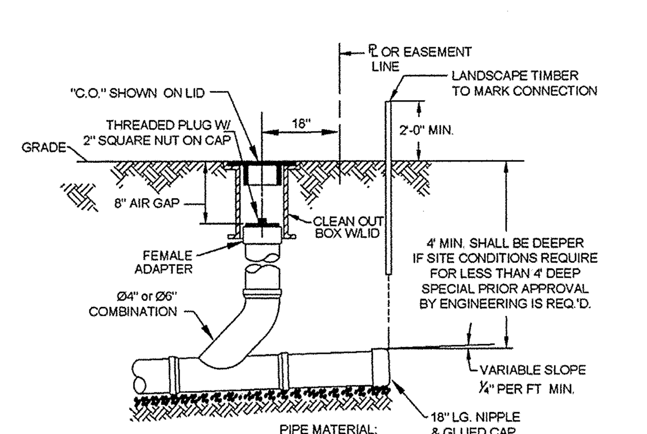

NOTE: FOR PRIVATE 8" SERVICES, MANHOLES ARE REQUIRED FOR TIE-IN TO MAIN

SERVICE CONNECTION & CLEAN-OUT

NOT TO SCALE

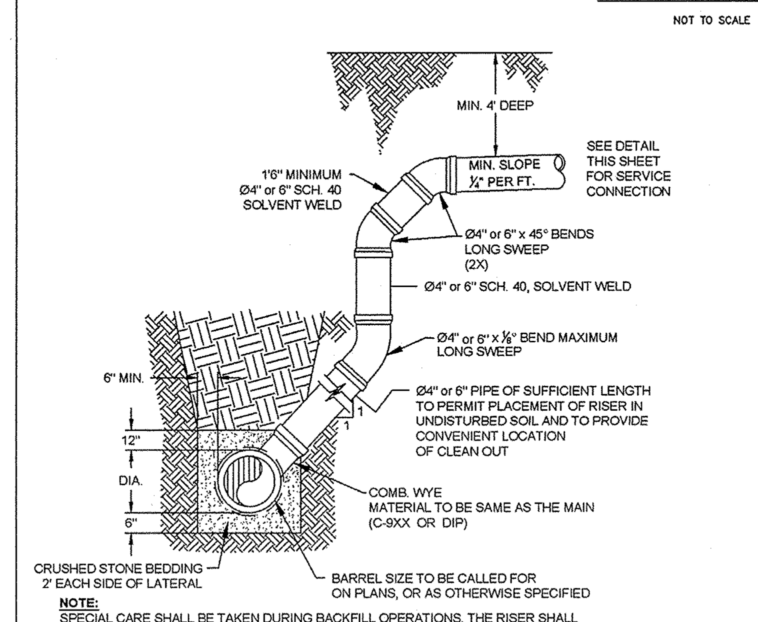

NOTE:
SPECIAL CARE SHALL BE TAKEN DURING BACKFILL OPERATIONS. THE RISER SHALL BE PLUMB AND TRUE AT ALL TIMES, AND REST ON FIRM, STABLE FOUNDATION.

FOR PRIVATE 8" SERVICES, MANHOLES ARE REQUIRED FOR TIE-IN TO MAIN

DEEP SERVICE LATERAL

(MAIN DEPTH GREATER THAN 8ft)

NOT TO SCALE

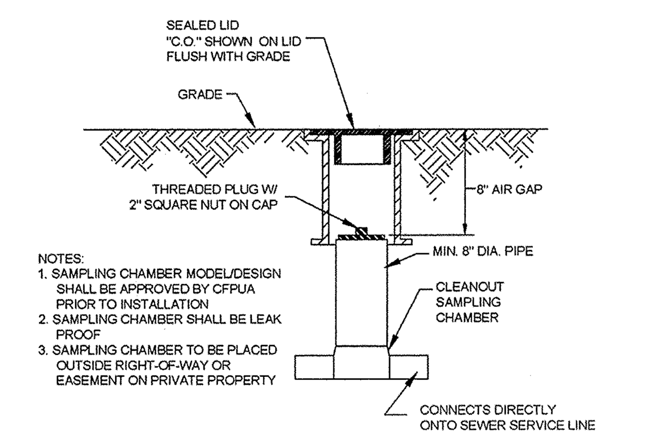

NOTES:
1. SAMPLING CHAMBER MODEL/DESIGN SHALL BE APPROVED BY CFPUA PRIOR TO INSTALLATION
2. SAMPLING CHAMBER SHALL BE LEAK PROOF
3. SAMPLING CHAMBER TO BE PLACED OUTSIDE RIGHT-OF-WAY OR EASEMENT ON PRIVATE PROPERTY

SAMPLING CHAMBER

NOT TO SCALE

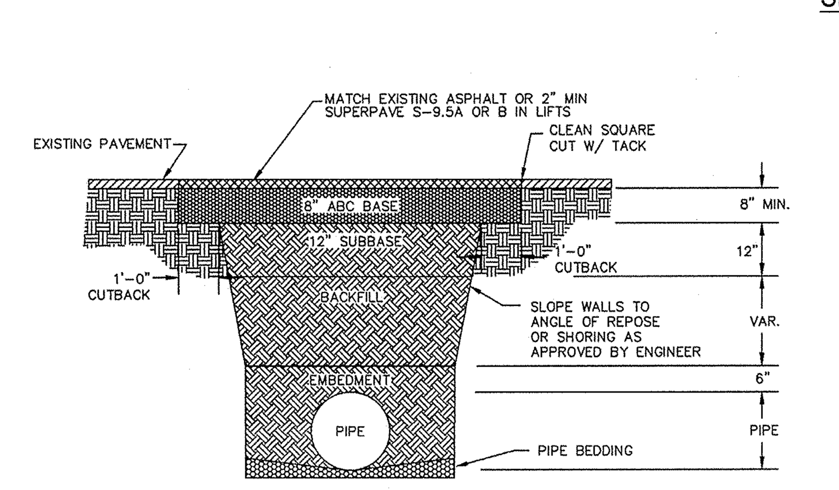

NOTES:
1. BACKFILL SHALL BE SUITABLE MATERIAL THAT IS FREE FROM HEAVY CLAY, GUMBOS, DEBRIS, ORGANICS AND LITTLE TO NO EXCESSIVE MOISTURE.
2. SELECT BACKFILL MAY BE SUBSTITUTED OR REQUIRED BY CITY TO ACHIEVE COMPACTION, (I.E. #57, ABC, CRUSHED LIMESTONE, CLEAN SAND, FLOWABLE FILL, ETC).
3. 8-INCH OF ABC BASE MATERIAL SHALL BE USED ON CITY STREETS.
4. BACKFILL AND BASE MATERIALS SHALL BE COMPACTED 12" MINIMUM LIFTS
5. SOIL SHALL BE COMPACTED BY A MECHANIZED TAMPER (I.E JUMPING JACK), HOWEVER, VIBRATORY ROLLERS > 18" WIDTH MAY BE USED FOR LARGER EXCAVATIONS. THE PLATE TAMP METHOD SHALL NOT BE USED.
6. ALL APPROVED CASTINGS SHALL BE SET FLUSH TO GRADE AND SUPPORTED IF APPLICABLE.
7. ABC BASE AND SUBBASE COMPACTED TO 98% AND BACKFILL AND EMBEDMENT COMPACTED TO 90% AS DETERMINED BY THE MODIFIED PROCTOR AASHTO METHOD T-99.
8. 1-FOOT CUTBACKS OF ASPHALT SHALL BE PREPARED ON UNDISTURBED SOIL. MINIMUM ASPHALT DENSITY IS 90%.

PAVEMENT REPAIR WHERE PIPE INSTALLED

(FOR PRIVATE ROADS AND PAVED AREAS; CONTRACTOR TO MEET MIN. REQUIREMENTS AS DEFINED BY RIGHT-OF-WAY OWNER FOR PUBLIC ROAD REPAIRS)

NOT TO SCALE

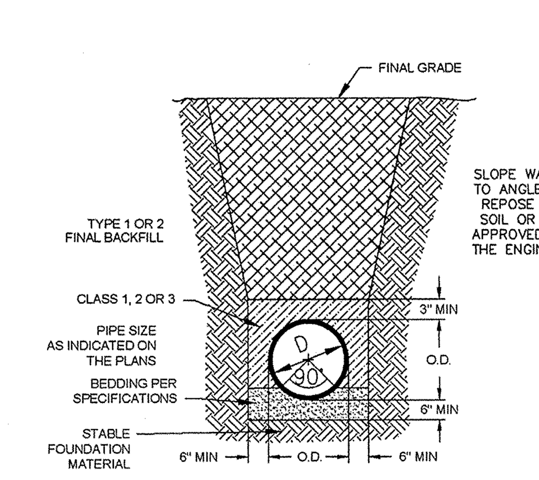

CL 50 DUCTILE IRON

DR 18 PVC

PIPE TRENCH DETAIL

NOT TO SCALE

NOTE:
PAVEMENT WIDTH AND LOCATION IN R/W VARIES. SEE PLAN FOR INDIVIDUAL LOCATION.

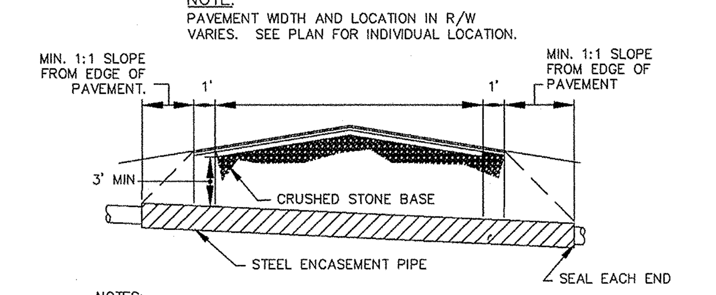

NOTES:
1. CASING WILL BE INSTALLED AT LINE AND GRADE SHOWN ON INDIVIDUAL PROFILE FOR EACH CROSSING. BORING/JACKING TO LINE AND GRADE IS REQUIRED.
2. TRACER WIRE SHALL BE CONTINUED THROUGH CASING

TYPICAL BORING/JACKING DETAIL

NOT TO SCALE

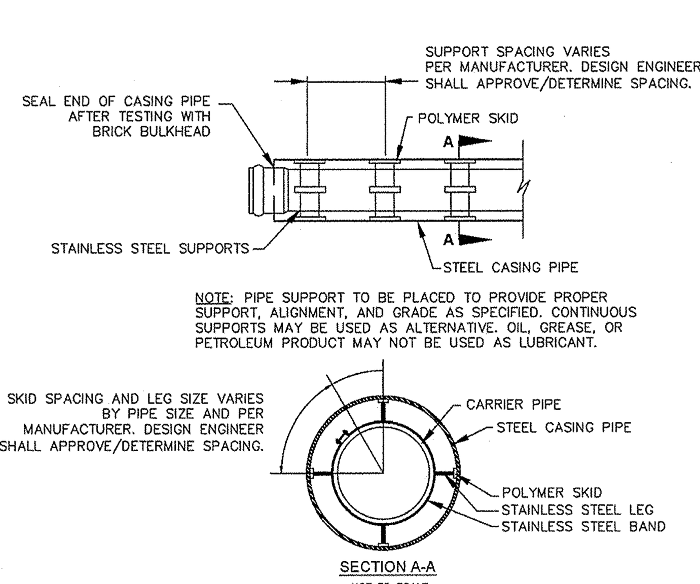

NOTE: PIPE SUPPORT TO BE PLACED TO PROVIDE PROPER SUPPORT, ALIGNMENT, AND GRADE AS SPECIFIED. CONTINUOUS SUPPORTS MAY BE USED AS ALTERNATIVE. OIL, GREASE, OR PETROLEUM PRODUCT MAY NOT BE USED AS LUBRICANT.

PIPE CASING SUPPORT DETAIL

NOT TO SCALE

GENERAL NOTES:
1. NO EXCAVATED MATERIAL SHALL BE PLACED IN ANY STREAM, DITCH OR DRAINAGE-WAY.
2. THE CONTRACTOR IS RESPONSIBLE FOR LOCATING ALL UNDERGROUND UTILITIES BEFORE ANY CONSTRUCTION BEGINS.
3. THE CONTRACTOR IS RESPONSIBLE FOR TEMPORARY SEDIMENT AND EROSION CONTROL MEASURES WHILE CONSTRUCTION IS IN PROGRESS.
4. THE CONTRACTOR IS RESPONSIBLE FOR STABILIZATION OF ALL DISTURBED AREAS.
5. THE CONTRACTOR IS RESPONSIBLE FOR LAY DOWN & STOCKPILE AREAS (TO ARRANGE AND INSURE COMPLIANCE WITH ALL LOCAL AND STATE REGULATIONS)

THE DETAILS SHOWN HEREON SUPERCEDE CFPUA WRITTEN TECHNICAL SPECIFICATIONS VERSIONS 1.00 - 1.04

REV:	DESCRIPTION:	DATE:

SANITARY SEWER STANDARD DETAILS

SANITARY SEWER STANDARD DETAILS SS-2

CAPE FEAR PUBLIC UTILITY AUTHORITY
235 GOVERNMENT CENTER DRIVE
WILMINGTON, NC 28403
OFFICE: (910)332-6560
Stewardship. Sustainability. Service.

DATE:	1/9/12
SCALE:	N/A
DRAWN BY:	CFPUA
CHECKED BY:	CFPUA
PROJECT NO.:	

SHEET NO: 2/4

SYMBOL	DATE	DESCRIPTION	BY
R1	03/07/13	REVISED OWNER INFORMATION AND PROJECT ADDRESS	JPN

REVISIONS

© 2013 NORRIS & TUNSTALL

DETAILS

THE LIGHTHOUSE APARTMENTS
4926 RANDALL PARKWAY

WILMINGTON, NORTH CAROLINA

OWNER:
RB-WILMINGTON, LLC
A DELAWARE LIMITED LIABILITY COMPANY
2234 W. NORTH AVE.
CHICAGO, IL 60647

NORRIS & TUNSTALL
CONSULTING ENGINEERS, P.C.
1127 FLORAL PARKWAY, SUITE 400
WILMINGTON, NC, 28403
N&T LICENSE NO. C-3641
PHONE (910) 343-9653
FAX (910) 343-9604

12080

DES.	JPN
CKD.	JPN
DRWN.	EDB
DATE	03/07/13

NORTH CAROLINA PROFESSIONAL SEAL 11966 ENGINEER JOHN PHILLIP NORRIS 03/07/13

C9

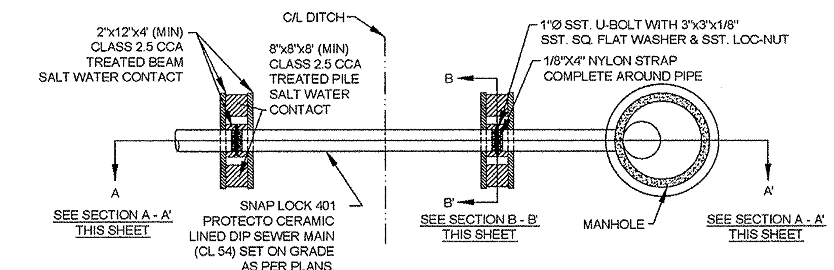

NOTES:

(1) PILES AND PILE DRIVING SHALL CONFORM TO NCDOT STANDARD SPECIFICATIONS FOR ROADS AND STRUCTURES, JANUARY 2002, SECTIONS 445, 450, 1082-2 & 1084-2
(2) CENTERLINE OF BOLTS TO BE A MINIMUM OF 3" FROM OUTSIDE EDGE OF TIMBER. BOLTS TO BE A MINIMUM OF 3" CENTERLINE TO CENTERLINE
(3) ALL STAINLESS STEEL SHALL BE 316. STAINLESS STRAP TO BE COLD FORMED.
(4) PILE SHALL NOT OBSTRUCT FLOW OR CAUSE EROSION OF DITCH/STREAM BANK.
(5) MIN. CLASS 54 DIP-ENGINEER MUST DESIGN LOADING.
(6) DESIGN SHALL BE APPROVED BY CFPUA

PILE AND BENT

NOT TO SCALE

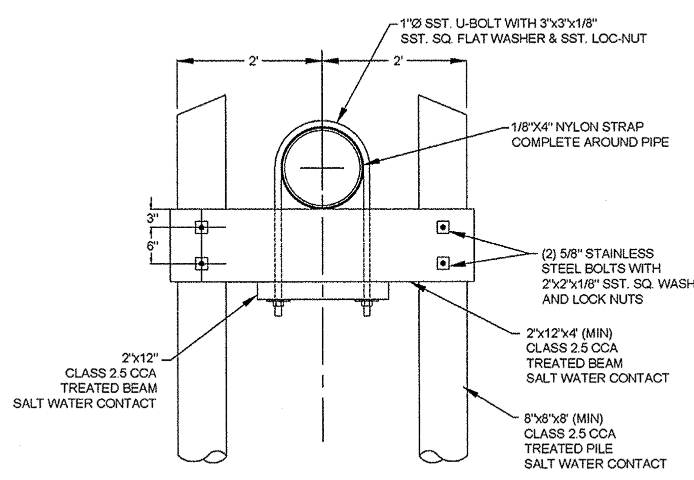

PILE AND BENT SECTION B - B'

NOT TO SCALE

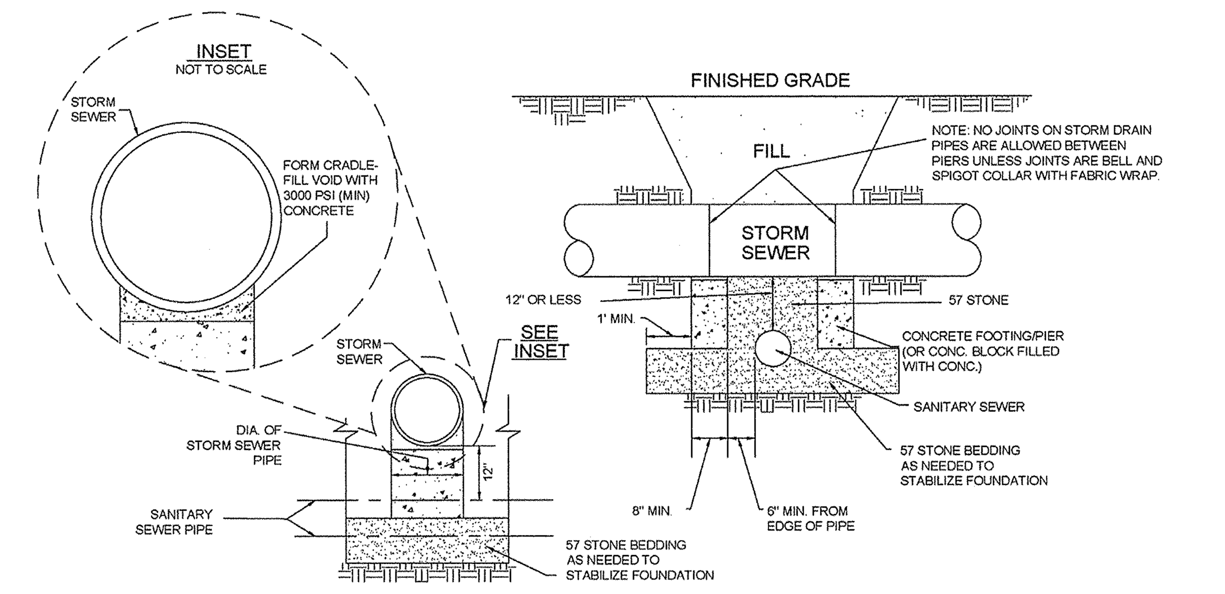

STRUCTURAL BRIDGING DETAIL FOR STORMWATER OVER GRAVITY SEWER INSTALLATIONS WITH LESS THAN 12" SEPARATION

NOT TO SCALE

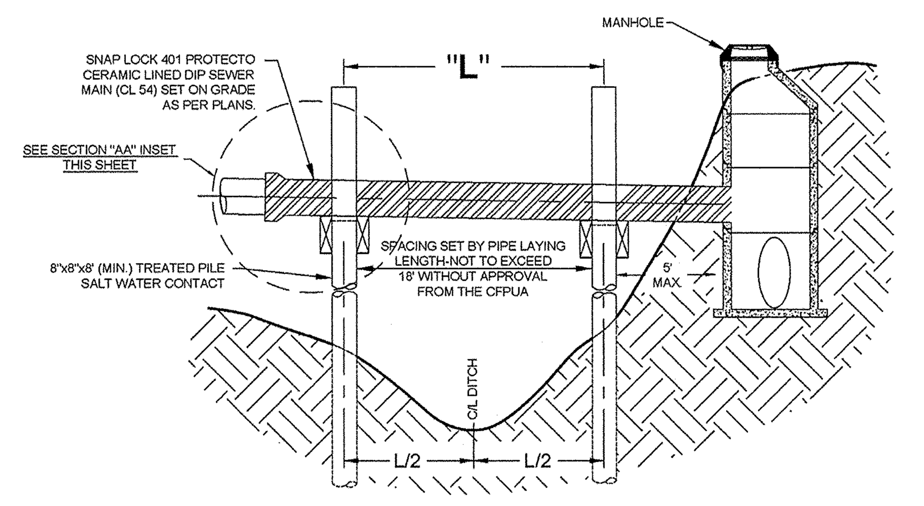

PILE AND BENT SECTION A - A'

NOT TO SCALE

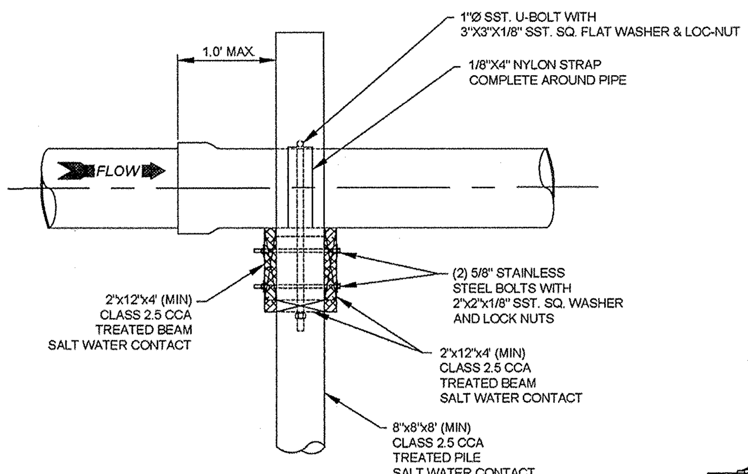

PILE AND BENT SECTION A - A' INSET

NOT TO SCALE

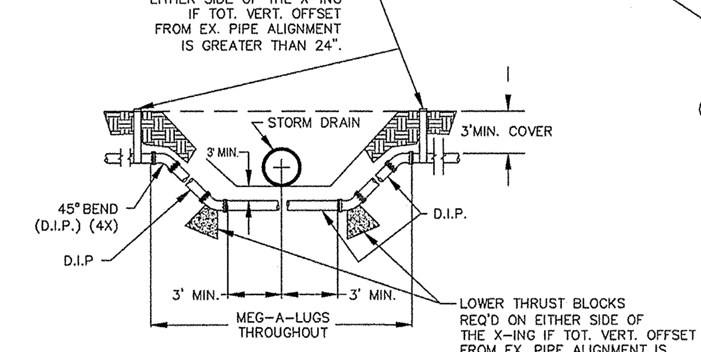

NOTE: USE D.I.P. (CL50 OR BETTER)

FORCE MAIN DITCH & STORM DRAIN CROSSING

NOT TO SCALE

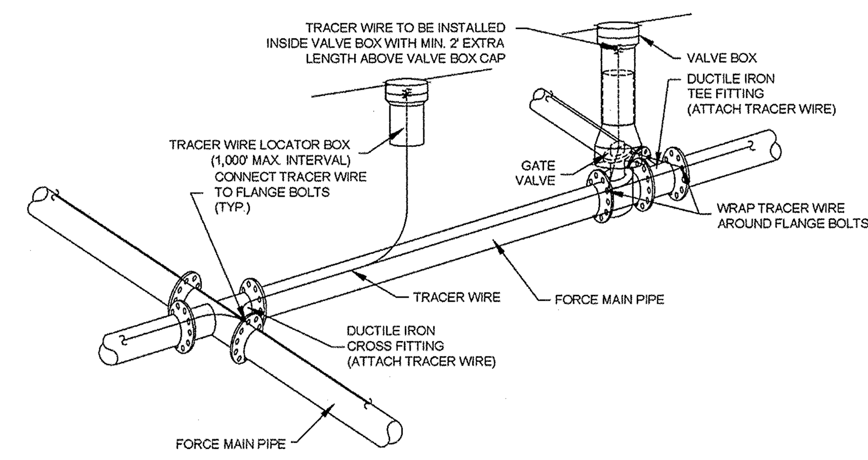

NOTES:
1. TRACER WIRE SHALL BE #10 COPPER SOLID CORE COPPER WIRE WITH GAS AND OIL RESISTANT INSULATION
2. WIRE SHALL BE STRAPPED TO ALL PVC FORCE MAIN PIPING WITH DUCT TAPE AT 12-FT. INTERVALS.
3. SECURE WIRE TO ALL TEE AND CROSS FITTINGS.
4. ALL WIRE SPLICES SHALL HAVE WATER PROOF WIRE CONNECTIONS.

TRACER WIRE DETAIL

NOT TO SCALE

GENERAL NOTES:
1. NO EXCAVATED MATERIAL SHALL BE PLACED IN ANY STREAM, DITCH OR DRAINAGE-WAY.
2. THE CONTRACTOR IS RESPONSIBLE FOR LOCATING ALL UNDERGROUND UTILITIES BEFORE ANY CONSTRUCTION BEGINS.
3. THE CONTRACTOR IS RESPONSIBLE FOR TEMPORARY SEDIMENT AND EROSION CONTROL MEASURES WHILE CONSTRUCTION IS IN PROGRESS.
4. THE CONTRACTOR IS RESPONSIBLE FOR STABILIZATION OF ALL DISTURBED AREAS.
5. THE CONTRACTOR IS RESPONSIBLE FOR LAY DOWN & STOCKPILE AREAS (TO ARRANGE AND INSURE COMPLIANCE WITH ALL LOCAL AND STATE REGULATIONS).

THE DETAILS SHOWN HEREON SUPERCEDE CFPUA WRITTEN TECHNICAL SPECIFICATIONS VERSIONS 1.00 - 1.04

REV:	DESCRIPTION:	DATE:

SANITARY SEWER STANDARD DETAILS

SANITARY SEWER STANDARD DETAILS SS-3

CAPE FEAR PUBLIC UTILITY AUTHORITY
235 GOVERNMENT CENTER DRIVE
WILMINGTON, NC 28403
OFFICE: (910)332-6560
Stewardship. Sustainability. Service.

DATE: 1/9/12
SCALE: N/A
DRAWN BY: CFPUA
CHECKED BY: CFPUA
PROJECT NO.:

SHEET NO: 3/4

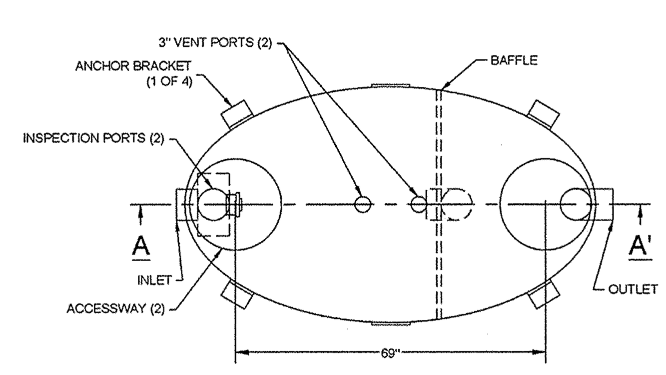

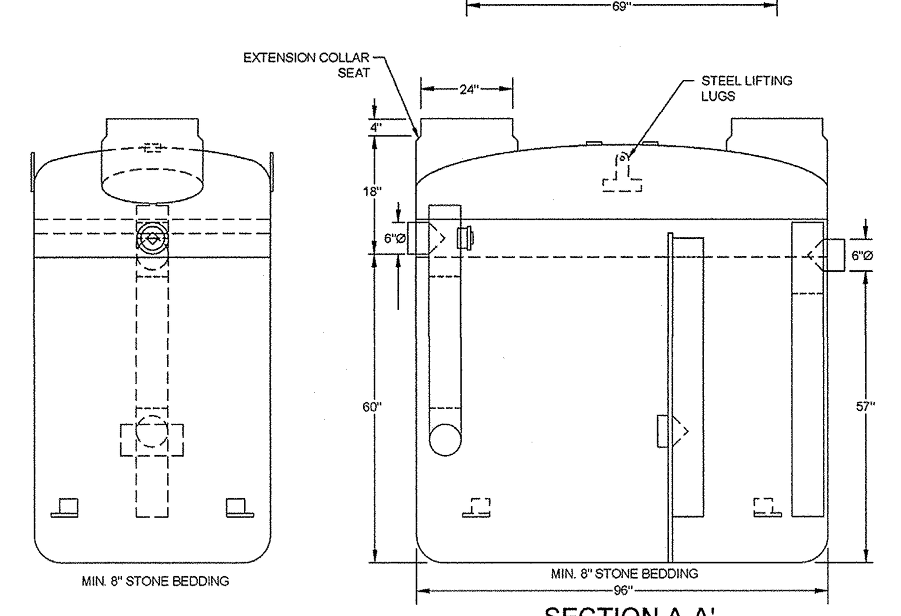

SECTION A-A'

NOTES:
1. FOR GRAVITY APPLICATIONS ONLY
2. MIN. THICKNESS: 1/4" WALL AND 3/8" TOP AND BOTTOM BOWLS
3. STANDARD PIPE STUBS ARE SOCKET SDR 35 PVC
4. EXTENSION COLLARS SHALL BE CAULKED WITH SIKAFLEX OR EQUIVALENT FOR WATERTIGHT SEAL
5. FOLLOW MANUFACTURE'S SPECS FOR TRAFFIC OR PEDESTRIAN LOADING

FIBERGLASS GREASE INTERCEPTOR

NOT TO SCALE

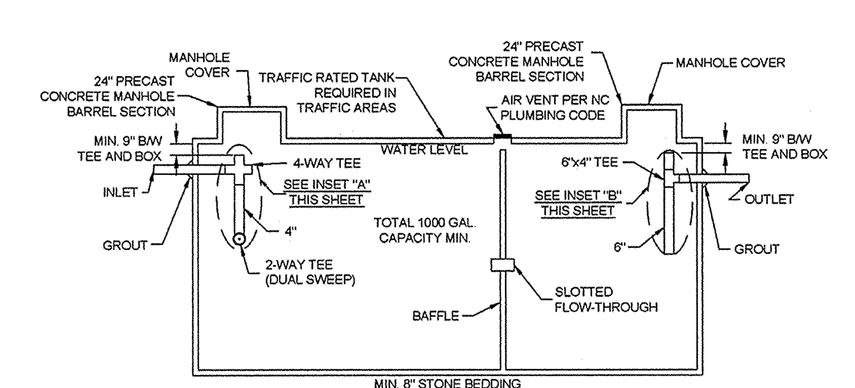

CONCRETE GREASE INTERCEPTOR

NOT TO SCALE

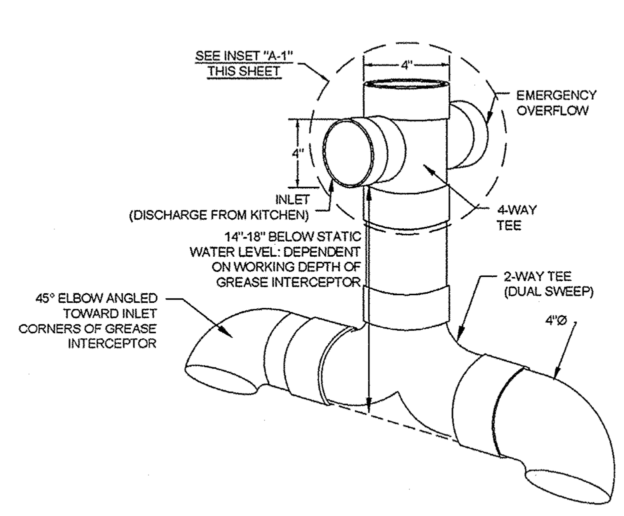

GREASE INTERCEPTOR INSET "A" 4" SANITARY TEE

NOT TO SCALE

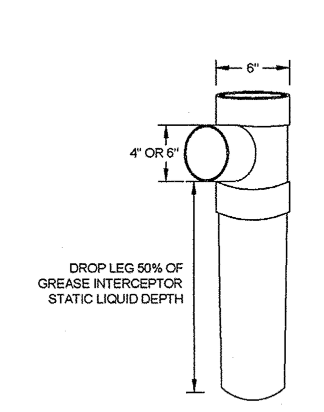

GREASE INTERCEPTOR INSET "B" 6" X 6" X 4" OUTLET SANITARY TEE

NOT TO SCALE

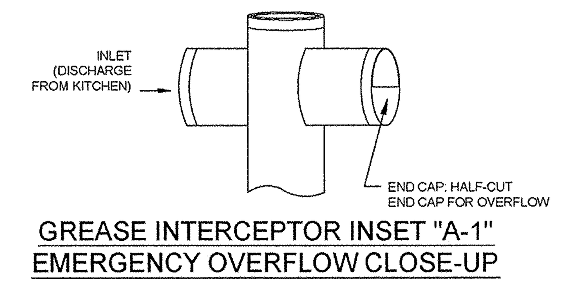

GREASE INTERCEPTOR INSET "A-1" EMERGENCY OVERFLOW CLOSE-UP

NOT TO SCALE

GENERAL NOTES:
1. NO EXCAVATED MATERIAL SHALL BE PLACED IN ANY STREAM, DITCH OR DRAINAGE-WAY.
2. THE CONTRACTOR IS RESPONSIBLE FOR LOCATING ALL UNDERGROUND UTILITIES BEFORE ANY CONSTRUCTION BEGINS.
3. THE CONTRACTOR IS RESPONSIBLE FOR TEMPORARY SEDIMENT AND EROSION CONTROL MEASURES WHILE CONSTRUCTION IS IN PROGRESS.
4. THE CONTRACTOR IS RESPONSIBLE FOR STABILIZATION OF ALL DISTURBED AREAS.
5. THE CONTRACTOR IS RESPONSIBLE FOR LAY DOWN & STOCKPILE AREAS (TO ARRANGE AND INSURE COMPLIANCE WITH ALL LOCAL AND STATE REGULATIONS).

THE DETAILS SHOWN HEREON SUPERCEDE CFPUA WRITTEN TECHNICAL SPECIFICATIONS VERSIONS 1.00 - 1.04

REV:	DESCRIPTION:	DATE:

SANITARY SEWER STANDARD DETAILS

SANITARY SEWER STANDARD DETAILS SS-4

CAPE FEAR PUBLIC UTILITY AUTHORITY
235 GOVERNMENT CENTER DRIVE
WILMINGTON, NC 28403
OFFICE: (910)332-6560
Stewardship. Sustainability. Service.

DATE: 1/9/12
SCALE: N/A
DRAWN BY: CFPUA
CHECKED BY: CFPUA
PROJECT NO.:

SHEET NO: 4/4

SYMBOL	DATE	DESCRIPTION	BY
R1	03/07/13	REVISED OWNER INFORMATION AND PROJECT ADDRESS	JPN

REVISIONS

© 2013 NORRIS & TUNSTALL

NORRIS & TUNSTALL
CONSULTING ENGINEERS, P.C.
1127 FLORAL PARKWAY, SUITE 400
WILMINGTON, NC, 28403
N&T LICENSE NO. C-3641
PHONE (910) 343-9653
FAX (910) 343-9604

OWNER:
RB-WILMINGTON, LLC
A DELAWARE LIMITED LIABILITY COMPANY
2234 W. NORTH AVE.
CHICAGO, IL 60647

DETAILS

THE LIGHTHOUSE APARTMENTS
4926 RANDALL PARKWAY
WILMINGTON, NORTH CAROLINA

12080

DES. JPN
CKD. JPN
DRWN. EDB
DATE 03/07/13

NORTH CAROLINA PROFESSIONAL ENGINEER SEAL 11966 JOHN PHILLIP NORRIS 3/7/13

C10

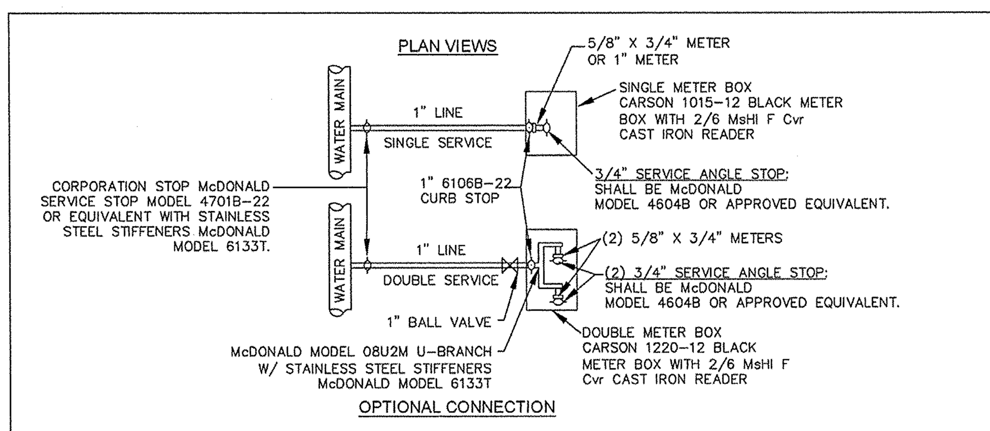

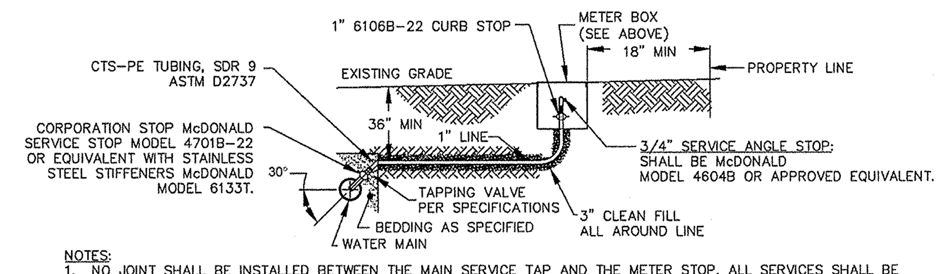

NOTES:
1. NO JOINT SHALL BE INSTALLED BETWEEN THE MAIN SERVICE TAP AND THE METER STOP. ALL SERVICES SHALL BE INSTALLED PERPENDICULAR TO MAIN.
2. SERVICE SADDLES ON PVC MAINS SHALL BE WIDE BAND BRASS BODY: SADDLE McDONALD 3801 OR EQUIVALENT
3. METER BOXES SUSCEPTIBLE TO TRAFFIC SHALL CONFORM TO ASTM A48, CLASS 30B AND AASHTO H20 LOAD RATING STANDARDS (SIP MODEL 4240 OR APPROVED EQUIVALENT)

SINGLE SERVICE SECTION VIEW

TYPICAL WATER SERVICE CONNECTION FOR RESIDENTIAL SINGLE FAMILY HOME ON CFPUA WATER SYSTEM

NOT TO SCALE

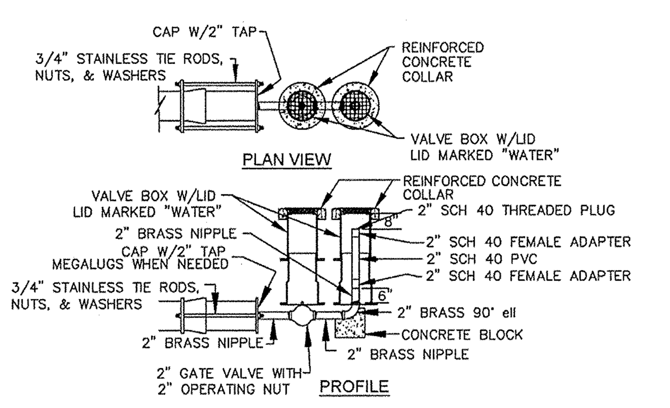

2" BLOW-OFF

NOT TO SCALE

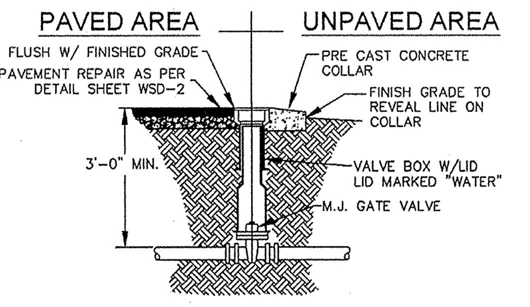

VALVE DETAIL

NOT TO SCALE

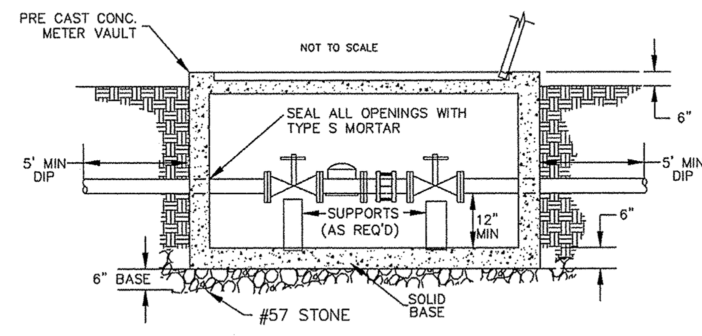

METER VAULT SECTION A-A

NOT TO SCALE

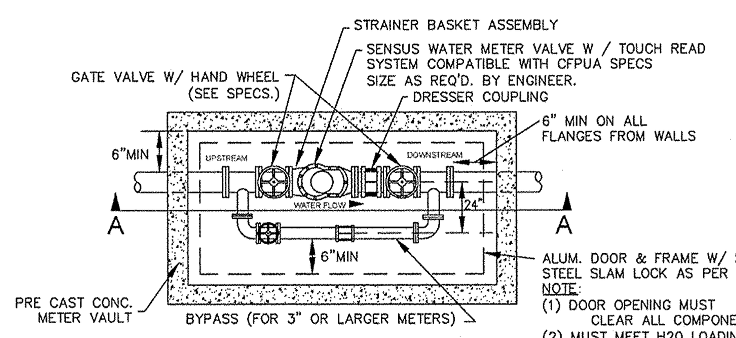

WATER METER VAULT

FOR WATER METERS LARGER THAN 2"

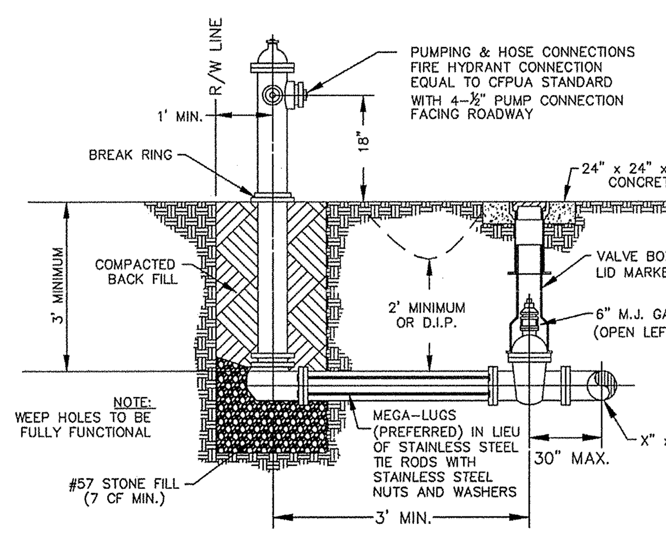

FIRE HYDRANT ASSEMBLY

NOT TO SCALE

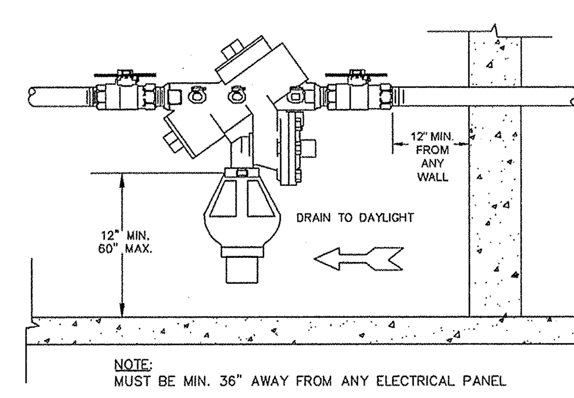

NOTE:
MUST BE MIN. 36" AWAY FROM ANY ELECTRICAL PANEL

INDOOR HORIZONTAL INSTALLATION

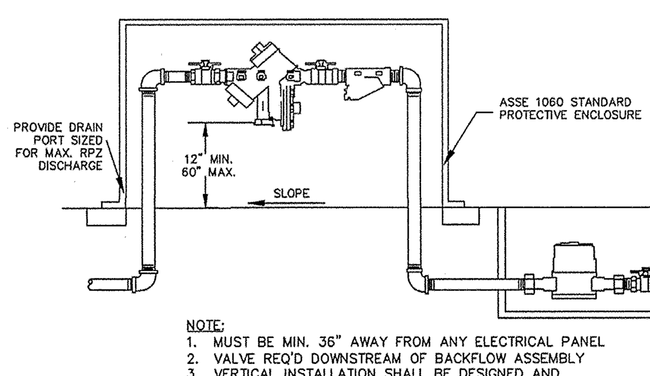

NOTE:
1. MUST BE MIN. 36" AWAY FROM ANY ELECTRICAL PANEL
2. VALVE REQ'D DOWNSTREAM OF BACKFLOW ASSEMBLY
3. VERTICAL INSTALLATION SHALL BE DESIGNED AND SUBMITTED TO CFPUA ESMD FOR APPROVAL

OUTDOOR HORIZONTAL INSTALLATION

REDUCED PRESSURE PRINCIPLE ASSEMBLY

NOT TO SCALE

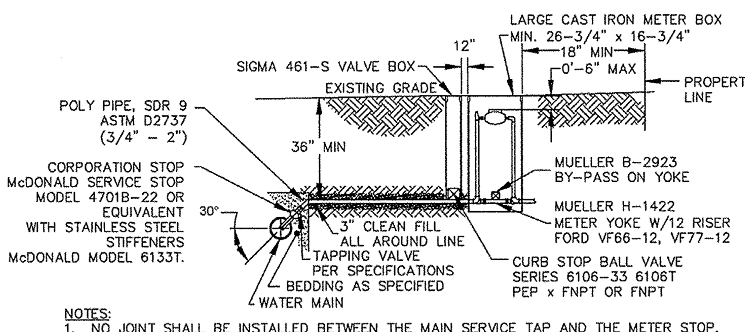

NOTES:
1. NO JOINT SHALL BE INSTALLED BETWEEN THE MAIN SERVICE TAP AND THE METER STOP. ALL SERVICES SHALL BE INSTALLED PERPENDICULAR TO MAIN.
2. SERVICE SADDLES ON PVC MAINS SHALL BE WIDE BAND BRASS BODY: SADDLE McDONALD 3801 OR EQUIVALENT
3. METER BOXES SUSCEPTIBLE TO TRAFFIC SHALL CONFORM TO ASTM A48, CLASS 30B AND AASHTO H20 LOAD RATING STANDARDS (SIP MODEL 4240 OR APPROVED EQUIVALENT)

LARGE METER BOX

FOR 1 1/2" OR 2" WATER SERVICES

NOT TO SCALE

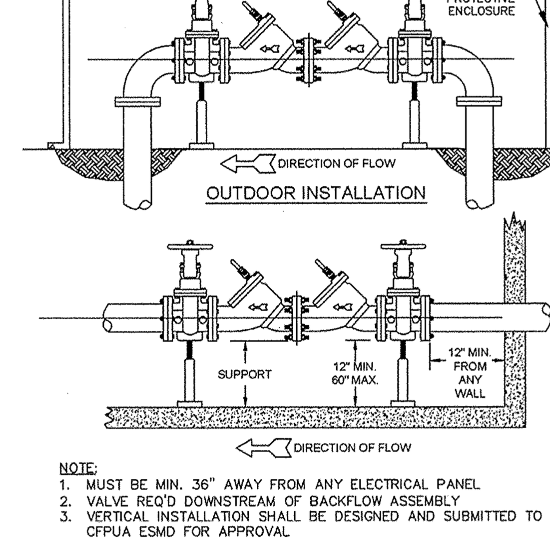

NOTE:
1. MUST BE MIN. 36" AWAY FROM ANY ELECTRICAL PANEL
2. VALVE REQ'D DOWNSTREAM OF BACKFLOW ASSEMBLY
3. VERTICAL INSTALLATION SHALL BE DESIGNED AND SUBMITTED TO CFPUA ESMD FOR APPROVAL

INDOOR INSTALLATION

DOUBLE CHECK VALVE ASSEMBLY

NOT TO SCALE

GENERAL NOTES:

1. NO EXCAVATED MATERIAL SHALL BE PLACED IN ANY STREAM, DITCH OR DRAINAGE-WAY.
2. THE CONTRACTOR IS RESPONSIBLE FOR LOCATING ALL UNDERGROUND UTILITIES BEFORE ANY CONSTRUCTION BEGINS.
3. THE CONTRACTOR IS RESPONSIBLE FOR TEMPORARY SEDIMENT AND EROSION CONTROL MEASURES WHILE CONSTRUCTION IS IN PROGRESS.
4. THE CONTRACTOR IS RESPONSIBLE FOR STABILIZATION OF ALL DISTURBED AREAS.
5. THE CONTRACTOR IS RESPONSIBLE FOR LAY DOWN & STOCKPILE AREAS (TO ARRANGE AND ENSURE COMPLIANCE WITH ALL LOCAL AND STATE REGULATIONS).

THE DETAILS SHOWN HEREON SUPERCEDE CFPUA WRITTEN TECHNICAL SPECIFICATIONS VERSIONS 1.00 - 1.04

WATER DISTRIBUTION SYSTEM STANDARD DETAILS

WATER STANDARD DETAILS **WSD-1**

CAPE FEAR PUBLIC UTILITY AUTHORITY
235 GOVERNMENT CENTER DRIVE
WILMINGTON, NC 28403
OFFICE: (910)332-6560
Stewardship. Sustainability. Service.

DATE: 1/9/12
SCALE: N/A
DRAWN BY: CFPUA
CHECKED BY: CFPUA
PROJECT NO.:

SHEET NO: 1/2

REV:	DESCRIPTION:	DATE:

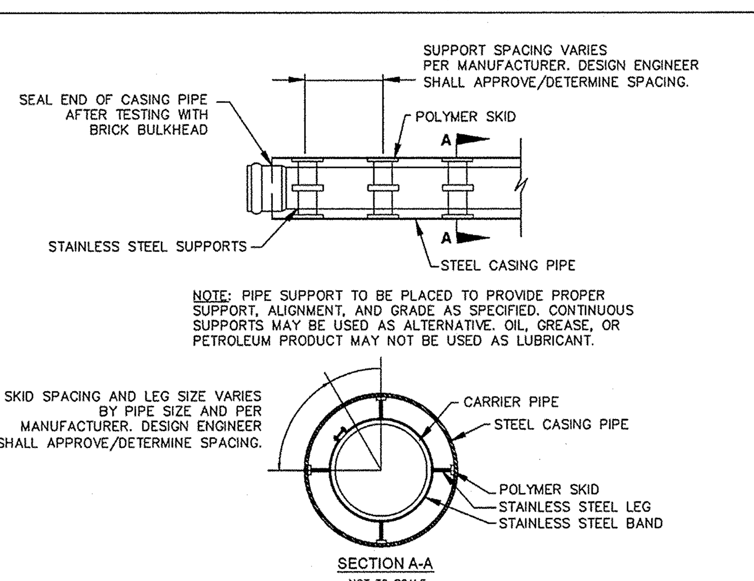

NOTE: PIPE SUPPORT TO BE PLACED TO PROVIDE PROPER SUPPORT, ALIGNMENT, AND GRADE AS SPECIFIED. CONTINUOUS SUPPORTS MAY BE USED AS ALTERNATIVE. OIL, GREASE, OR PETROLEUM PRODUCT MAY NOT BE USED AS LUBRICANT.

PIPE CASING SUPPORT DETAIL

NOT TO SCALE

NOTE:
PAVEMENT WIDTH AND LOCATION IN R/W VARIES. SEE PLAN FOR INDIVIDUAL LOCATION.

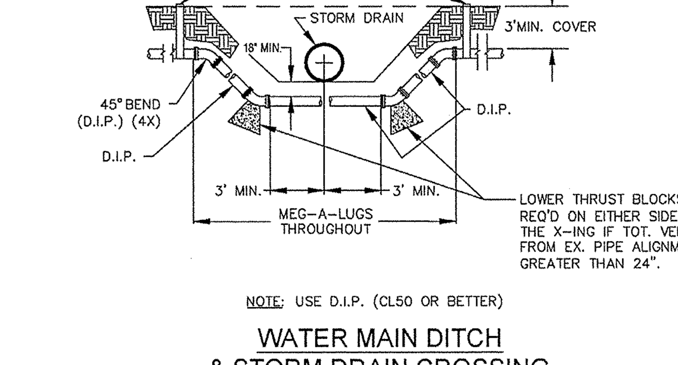

NOTES:
1. CASING WILL BE INSTALLED AT LINE AND GRADE SHOWN ON INDIVIDUAL PROFILE FOR EACH CROSSING. BORING/JACKING TO LINE AND GRADE IS REQUIRED.
2. TRACER WIRE SHALL BE CONTINUED THROUGH CASING

TYPICAL BORING/JACKING DETAIL

NOT TO SCALE

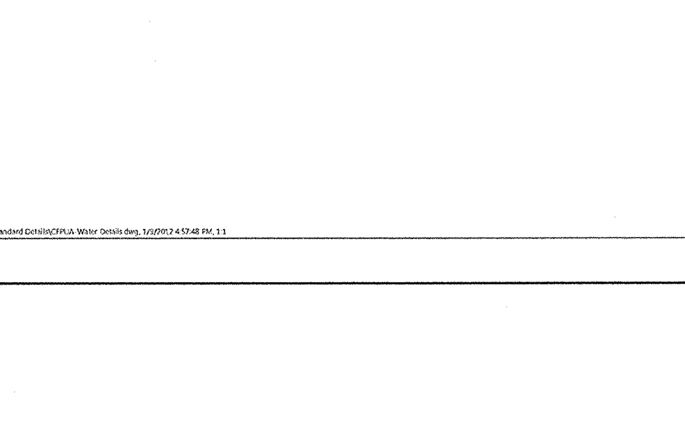

NOTE: USE D.I.P. (CL50 OR BETTER)

WATER MAIN DITCH & STORM DRAIN CROSSING

NOT TO SCALE

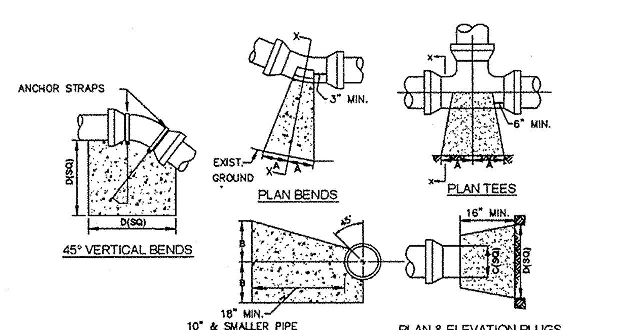

SIZE	90° BENDS A	90° BENDS B	45° BENDS A	45° BENDS B	22 1/2° BENDS A	22 1/2° BENDS B	TEES/PLUGS A	TEES/PLUGS B	45° VERT. BENDS
3"	8"	6"	5"	6"	3"	7"	6"	8"	27"
4"	8"	9"	5"	8"	3"	11"	6"	9"	28"
6"	14"	11"	9"	9"	8"	8"	12"	9"	36"
8"	16"	16"	12"	12"	10"	13"	14"	13"	42"
10"	18"	22"	15"	14"	14"	16"	18"	15"	50"
12"	20"	28"	18"	17"	16"	16"	22"	18"	62"
14"	26"	29"	21"	19"	18"	18"	26"	20"	72"
16"	33"	29"	25"	21"	20"	21"	32"	21"	83"
18"	40"	30"	28"	24"	22"	23"	36"	24"	88"

NOTES:
1. BASED ON 160 PSI TEST PRESSURE AND 2000 PSF SOIL BEARING CAPACITY.
2. ALL BEARING SURFACES TO BE CARRIED TO UNDISTURBED GROUND.
3. USE MEG-A-LUG (PREFERRED) IN LIEU OF BLOCKING AND RODDING.

THRUST BLOCK DETAIL

NOT TO SCALE

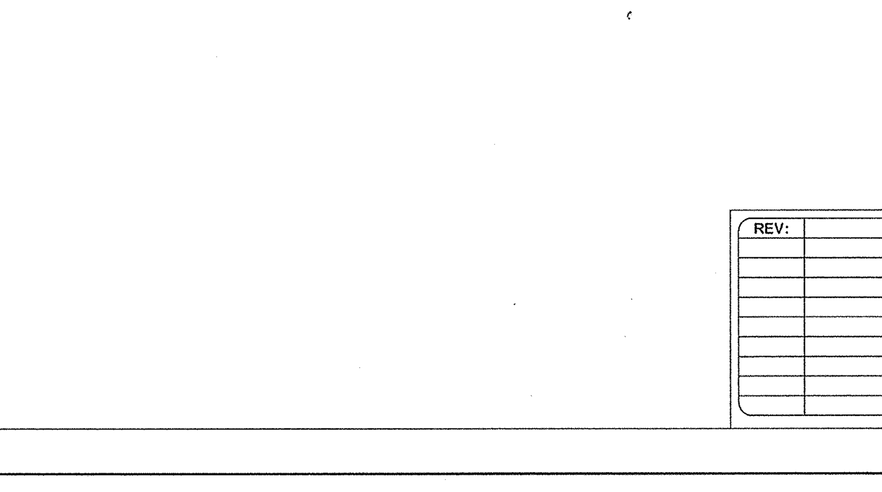

NOTES:
1. TRACER WIRE SHALL BE #10 COPPER SOLID CORE COPPER WIRE WITH GAS AND OIL RESISTANT INSULATION
2. WIRE SHALL BE STRAPPED TO ALL PVC WATER MAIN PIPING WITH DUCT TAPE AT 12-FT. INTERVALS
3. SECURE WIRE TO ALL TEE AND CROSS FITTINGS.
4. ALL WIRE SPLICES SHALL HAVE WATER PROOF WIRE CONNECTIONS.

TRACER WIRE DETAIL

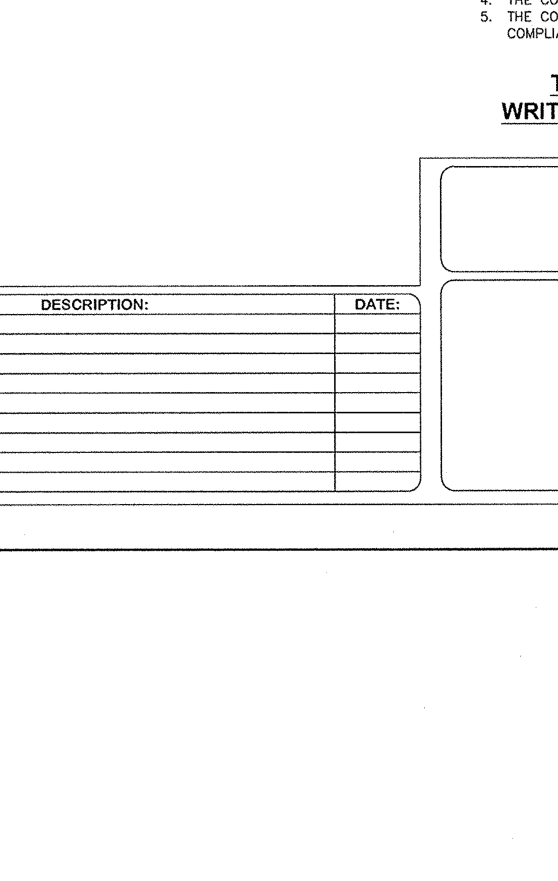

SAMPLING STATION

NOT TO SCALE

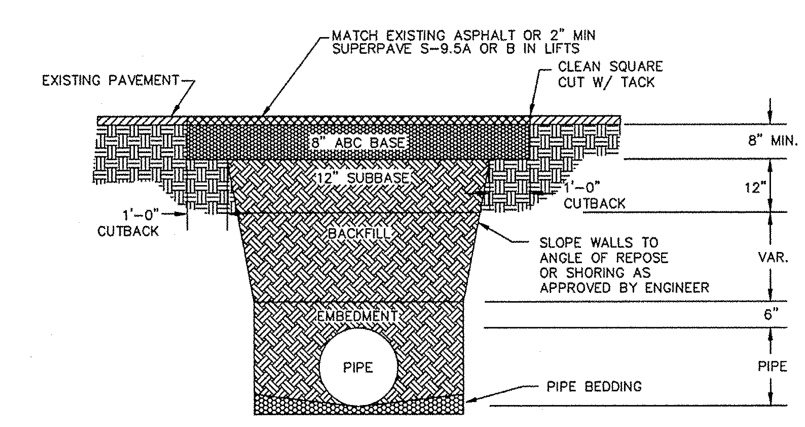

NOTES:
1. BACKFILL SHALL BE SUITABLE MATERIAL THAT IS FREE FROM HEAVY CLAY, GUMBOS, DEBRIS, ORGANICS AND LITTLE TO NO EXCESSIVE MOISTURE.
2. SELECT BACKFILL MAY BE SUBSTITUTED OR REQUIRED BY CITY TO ACHIEVE COMPACTION, (I.E. #57, ABC, CRUSHED LIMESTONE, CLEAN SAND, FLOWABLE FILL, ETC).
3. 8-INCH OF ABC BASE MATERIAL SHALL BE USED ON CITY STREETS.
4. BACKFILL AND BASE MATERIALS SHALL BE COMPACTED 12" MINIMUM LIFTS
5. SOIL SHALL BE COMPACTED BY A MECHANIZED TAMPER (I.E JUMPING JACK), HOWEVER, VIBRATORY ROLLERS > 18" WIDTH MAY BE USED FOR LARGER EXCAVATIONS. THE PLATE TAMP METHOD SHALL NOT BE USED.
6. ALL APPROVED CASTINGS SHALL BE SET FLUSH TO GRADE AND SUPPORTED IF APPLICABLE.
7. ABC BASE AND SUBBASE COMPACTED TO 98% AND BACKFILL AND EMBEDMENT COMPACTED TO 90% AS DETERMINED BY THE MODIFIED PROCTOR AASHTO METHOD T-99.
8. 1-FOOT CUTBACKS OF ASPHALT SHALL BE PREPARED ON UNDISTURBED SOIL. MINIMUM ASPHALT DENSITY IS 90%.

PAVEMENT REPAIR WHERE PIPE INSTALLED

(FOR PRIVATE ROADS AND PAVED AREAS:
CONTRACTOR TO MEET MIN. REQUIREMENTS AS DEFINED BY
RIGHT-OF-WAY OWNER FOR PUBLIC ROAD REPAIRS)

NOT TO SCALE

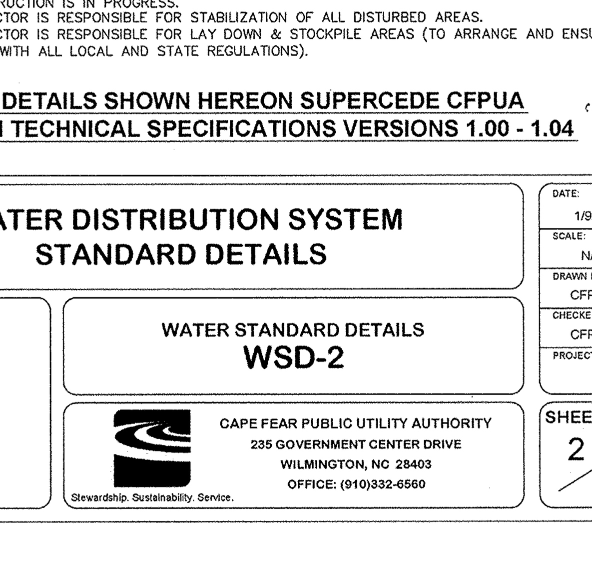

CL 50 DUCTILE IRON DR 18 PVC PIPE TRENCH DETAIL

NOT TO SCALE

GENERAL NOTES:

1. NO EXCAVATED MATERIAL SHALL BE PLACED IN ANY STREAM, DITCH OR DRAINAGE-WAY.
2. THE CONTRACTOR IS RESPONSIBLE FOR LOCATING ALL UNDERGROUND UTILITIES BEFORE ANY CONSTRUCTION BEGINS.
3. THE CONTRACTOR IS RESPONSIBLE FOR TEMPORARY SEDIMENT AND EROSION CONTROL MEASURES WHILE CONSTRUCTION IS IN PROGRESS.
4. THE CONTRACTOR IS RESPONSIBLE FOR STABILIZATION OF ALL DISTURBED AREAS.
5. THE CONTRACTOR IS RESPONSIBLE FOR LAY DOWN & STOCKPILE AREAS (TO ARRANGE AND ENSURE COMPLIANCE WITH ALL LOCAL AND STATE REGULATIONS).

THE DETAILS SHOWN HEREON SUPERCEDE CFPUA WRITTEN TECHNICAL SPECIFICATIONS VERSIONS 1.00 - 1.04

WATER DISTRIBUTION SYSTEM STANDARD DETAILS

WATER STANDARD DETAILS **WSD-2**

CAPE FEAR PUBLIC UTILITY AUTHORITY
235 GOVERNMENT CENTER DRIVE
WILMINGTON, NC 28403
OFFICE: (910)332-6560
Stewardship. Sustainability. Service.

DATE: 1/9/12
SCALE: N/A
DRAWN BY: CFPUA
CHECKED BY: CFPUA
PROJECT NO.:

SHEET NO: 2/2

REV:	DESCRIPTION:	DATE:

SYMBOL	DATE	DESCRIPTION	BY
R1	03/07/13	REVISED OWNER INFORMATION AND PROJECT ADDRESS	JPN

REVISIONS

© 2013 NORRIS & TUNSTALL

NORRIS & TUNSTALL
CONSULTING ENGINEERS, P.C.
1127 FLORAL PARKWAY, SUITE 400
WILMINGTON, NC, 28403
N&T LICENSE NO. C-3641
PHONE (910) 343-9653
FAX (910) 343-9604

OWNER:
RB-WILMINGTON, LLC
A DELAWARE LIMITED LIABILITY COMPANY
2234 W. NORTH AVE.
CHICAGO, IL 60647

DETAILS

THE LIGHTHOUSE APARTMENTS
4926 RANDALL PARKWAY

WILMINGTON, NORTH CAROLINA

12080

DES. JPN
CKD. JPN
DRWN. EDB
DATE 03/07/13

NORTH CAROLINA PROFESSIONAL ENGINEER SEAL 11966 JOHN PHILLIP NORRIS 03/07/13

C11

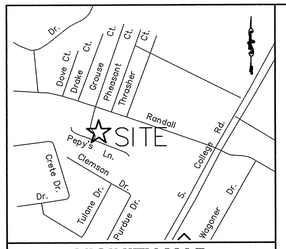

VICINITY MAP

N.T.S.

SITE DATA TABLE

SITE AREA:		318,859 SF / 7.32 AC	
PARCEL ID#:	4922 PEPYS LN.	R05507-002-080-000	(6.51 AC)
	4926 RANDALL PKWY.	R05507-002-076-000	(0.81 AC)
ZONING:		R05507-002-080-000	(MF-M)
		R05507-002-076-000	(O&I-1)

DISTURBED AREA: 316,652.62 SF / 7.27 ACRES
15 TREES PER DISTURBED ACRE IS REQUIRED ON THE SITE. = 110 TREES
CAMA LAND USE: URBAN
SOIL TYPES ON SITE: LEON

BUILDING SETBACKS: MF-M	REQUIRED	ACTUAL
	FRONT: 35'	FRONT: 85'/89'
	* SIDE: 32'	SIDE: 137'/147'
	* REAR: 37'	REAR: 81'
	* INCREASED DUE TO BUILDING HEIGHT	

BUILDING SETBACKS: O&I-1	REQUIRED	ACTUAL
	FRONT: 20'	FRONT: 43'/133'
	* SIDE: 10'	SIDE: 85'/10'
	* REAR: N/A	REAR: N/A
	* INCREASED DUE TO BUILDING HEIGHT	

BUILDINGS 1 & 2: TYPE 3B CONSTRUCTION
CLUB HOUSE BUILDING: TYPE 5A & 5B CONSTRUCTION

PROPOSED BUILDING:		USES:	HEIGHT:	SIZE:
BLDG. 1	4 STORY	RESIDENTIAL	56'	14,385 SF/FLOOR
BLDG. 2	4 STORY	RESIDENTIAL	56'	31,136 SF/FLOOR
CLUB HOUSE		RECREATION/PERSONAL SERVICES	25'	6,134 SF
RECREATION		6,053 SF		
PERSONAL SERVICES		81 SF		
MAINTENANCE BUILDING				744 SF
POOL EQUIPMENT BUILDING				120 SF
BUS SHELTER/MAIL KIOSK				234 SF
TOTAL FOOTPRINT OF BUILDINGS:				52,753 SF

MAX DENSITY: 17 UNITS / AC
ACTUAL DENSITY: 124 UNITS / 7.32 AC= 16.94 UNITS / AC
TOTAL FOOTPRINT OF BUILDINGS: 59,045 SF
MAX LOT COVERAGE: 30%
ACTUAL LOT COVERAGE: 18.52%

UNITS PER BUILDING:
BUILDING 1: 12-2 BR UNITS & 28-3 BR UNITS
BUILDING 2: 12-2 BR UNITS & 72-3 BR UNITS

REQUIRED PARKING: 2.25 SP. PER 3 BED UNITS
2.0 SP. PER 2 BED UNITS
1 SP. PER 400 SF MIN., 1 SP. PER 225 SF MAX.

REQUIRED PARKING: 3 BED UNITS = 2.25(100) = 225 SP.
2 BED UNITS = 2.0(24) = 48 SP.
(81 SF/400)1 = 1 SP.

TOTAL REQUIRED PARKING: 274 SP. (INCLUDES 7 HC)
PARKING PROVIDED: 277 SP. (INCLUDING 7 HC)

BICYCLE PARKING:
REQUIRED: 274 PARKING SPACES = MIN. 15
PROVIDED: 50 BICYCLE SPACES

IMPERVIOUS AREAS: PROPOSED

BLDG. 1	14,385 SF
BLDG. 2	31,136 SF
CLUB HOUSE (INCLUDES SALES OFFICE & MODEL UNIT)	6,134 SF
MAINTENANCE BUILDING	744 SF
POOL EQUIPMENT BUILDING:	120 SF
BUS SHELTER/MAIL KIOSK	234 SF
ASPHALT	96,621 SF
SIDEWALK	22,005 SF
BASKETBALL COURT	1,750 SF
ACTIVITY CENTER PATIO	8,165 SF
TOTAL IMPERVIOUS AREA:	181,294 SF / 4.16 AC
% IMPERVIOUS:	56.83%

IMPERVIOUS AREAS: EXISTING
ALL EXISTING IMPERVIOUS SURFACES TO BE REMOVED

OPEN SPACE
REQUIRED: 35% OF SITE AREA LESS INFILTRATION AREA #2
(318,859 SF-21,127 SF) x .35 104,206 SF
PROVIDED OPEN SPACE: 104,743 SF / 35.18%
ACTIVE PROVIDED: 41,167 SF
PASSIVE PROVIDED: 63,576 SF

SHADED AREA REQUIRED:
REQUIRED: 20% x 96,621 SF= 19,325 SF
PROVIDED: SEE LANDSCAPE PLAN

ISLAND AREA PROVIDED: 12,688 SF

PRIMARY STREET YARD REQUIRED: (200 LF - 28 LF)18 = 3,096 SF
PRIMARY STREET YARD PROVIDED: 3,142 SF

FOUNDATION PLANTINGS REQUIRED: BLDG. 1
FRONT: (187'(L)x44'(H))(.12)= 987.4 SF
SIDE: (55'(L)x44'(H))(.12)= 290.4 SF
REAR: (95'(L)x44'(H))(.12)= 501.6 SF
REAR: (55'(L)x44'(H))(.12)= 290.4 SF

FOUNDATION PLANTINGS PROVIDED: BLDG. 1
FRONT: 1,860 SF
SIDE: 307 SF
REAR: 586 SF
REAR: 320 SF

FOUNDATION PLANTINGS REQUIRED: BLDG. 2
FRONT: (218'(L)x44'(H))(.12)= 1,151.0 SF
SIDE: (175'(L)x44'(H))(.12)= 924.0 SF
REAR: (55'(L)x44'(H))(.12)= 290.4 SF
REAR: (167'(L)x44'(H))(.12)= 881.8 SF

FOUNDATION PLANTINGS PROVIDED: BLDG. 2
FRONT: 2,040 SF
SIDE: 1,425 SF
REAR: 427 SF
REAR: 910 SF

FOUNDATION PLANTINGS REQUIRED: CLUB HOUSE
FRONT: (131'(L)x12'(H))(.12)= 188.6 SF
SIDE: (37'(L)x12'(H))(.12)= 53.3 SF

FOUNDATION PLANTINGS PROVIDED: CLUB HOUSE
FRONT: 1,130 SF
SIDE: 129 SF

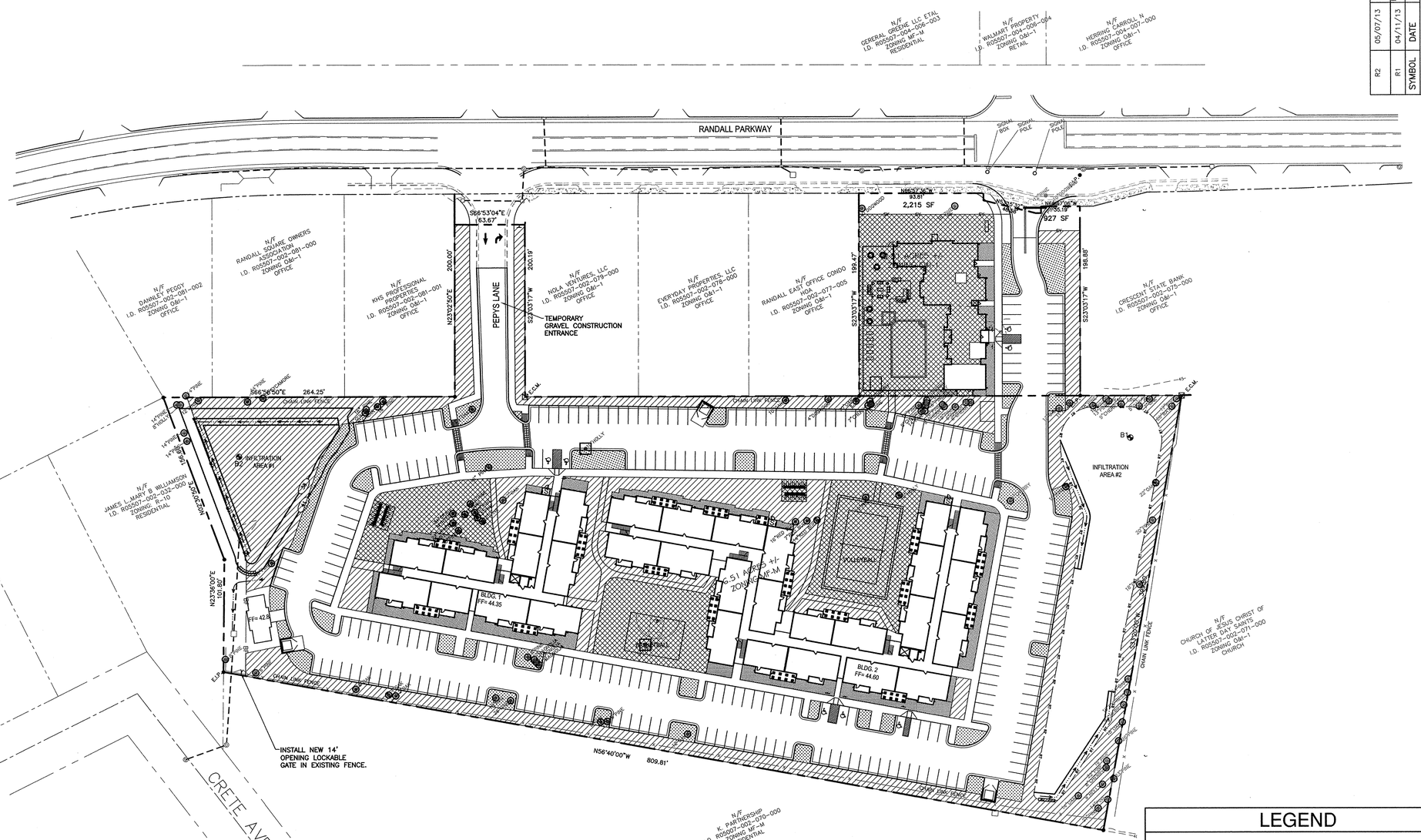

Approved Construction Plan

	Name	Date
Planning		
Traffic		
Fire		

For each open utility cut of City streets, a $325 permit shall be required from the City prior to occupancy and/or project acceptance.

1 inch

STORMWATER MANAGEMENT PLAN
APPROVED
CITY OF WILMINGTON
ENGINEERING DEPARTMENT
DATE _____ PERMIT # _____
SIGNED _____

ACTIVE OPEN SPACE

PASSIVE OPEN SPACE

LEGEND

PROPERTY LINE
RIGHT OF WAY
SB — SB SETBACK
BF — BF BUFFER
SY — SY STREET YARD
RT — RT 4' KEYSTONE RETAINING WALL
24" CURB & GUTTER
42 EXISTING CONTOUR
+42.54 EXISTING SPOT ELEVATION
17"PINE EXISTING TREE TO BE SAVED
FOUNDATION PLANTING
STREET YARD / LANDSCAPING

SCALE: 1" = 50'
0 50 100 150

SYMBOL	DATE	DESCRIPTION	BY
R2	05/07/13	REVISED OPEN SPACE AND UPDATED SITE DATA TABLE	JPN
R1	04/11/13	REVISED SHEETS, UPDATED BASINS, SIDEWALK AND OPEN SPACE	JPN

REVISIONS

© 2013 NORRIS & TUNSTALL

OPEN SPACE EXHIBIT SHEET
THE LIGHTHOUSE APARTMENTS
4926 RANDALL PARKWAY
WILMINGTON, NORTH CAROLINA

OWNER:
RB-WILMINGTON, LLC A A DELAWARE LIMITED LIABILITY COMPANY
2234 W. NORTH AVE.
CHICAGO, IL 60647

NORRIS & TUNSTALL
CONSULTING ENGINEERS, P.C.
1127 FLORAL PARKWAY, SUITE 400
WILMINGTON, NC, 28403
PHONE (910) 343-9653
FAX (910) 343-9604
N&T LICENSE NO. C-3641

12080

DES.	JPN
CKD.	JPN
DRWN.	EDB
DATE	04/11/13

NORTH CAROLINA PROFESSIONAL SEAL 11966 ENGINEER JOHN PHILLIP NORRIS 05-07-13

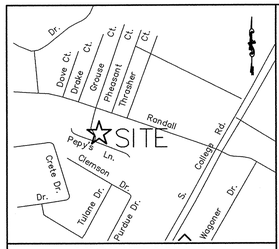

VICINITY MAP

N.T.S.

TREE DESCRIPTION	SAVE/REMOVE	TREE DESCRIPTION	SAVE/REMOVE	TREE DESCRIPTION	SAVE/REMOVE	TREE DESCRIPTION	SAVE/REMOVE
2" DOGWOOD	REMOVE	12" DOGWOOD	REMOVE	15" PINE	REMOVE	18" PINE	REMOVE
3" MAGNOLIA	REMOVE	12" MAGNOLIA	REMOVE	15" PINE	REMOVE	18" PINE	REMOVE
4" CHERRY	SAVE	12" MAGNOLIA	REMOVE	15" PINE	REMOVE	18" PINE	REMOVE
4" DOGWOOD	SAVE	12" OAK	REMOVE	15" PINE	REMOVE	18" PINE	REMOVE
4" MAGNOLIA	REMOVE	12" OAK	REMOVE	15" PINE	REMOVE	18" PINE	REMOVE
4" MAGNOLIA	REMOVE	12" OAK	SAVE	15" PINE	REMOVE	18" PINE	REMOVE
4" MAGNOLIA	REMOVE	12" OAK	SAVE	15" PINE	REMOVE	18" PINE	REMOVE
4" MAGNOLIA	SAVE	12" PINE	REMOVE	15" PINE	REMOVE	18" PINE	REMOVE
4" MAGNOLIA	SAVE	12" PINE	REMOVE	15" PINE	REMOVE	18" PINE	REMOVE
4" MAGNOLIA	SAVE	12" PINE	REMOVE	15" PINE	REMOVE	18" PINE	REMOVE
4" MAPLE	REMOVE	12" PINE	REMOVE	15" PINE	REMOVE	18" PINE	REMOVE
5" DOGWOOD	REMOVE	12" PINE	REMOVE	15" PINE	REMOVE	18" PINE	REMOVE
5" EUCALYP	REMOVE	12" PINE	REMOVE	15" PINE	SAVE	18" PINE	REMOVE
5" MIMOSA	REMOVE	12" PINE	REMOVE	15" PINE	SAVE	18" PINE	REMOVE
5" OAK	SAVE	12" PINE	REMOVE	15" PINE	SAVE	18" PINE	REMOVE
6" CHERRY	SAVE	12" PINE	REMOVE	16" CHERRY	REMOVE	18" PINE	REMOVE
6" DOGWOOD	REMOVE	12" PINE	REMOVE	16" CHERRY	REMOVE	18" PINE	REMOVE
6" DOGWOOD	REMOVE	12" PINE	REMOVE	16" CRAPE MYRTLE	REMOVE	18" PINE	REMOVE
6" HOLLY	REMOVE	12" PINE	REMOVE	16" HOLLY	REMOVE	18" PINE	REMOVE
6" MAGNOLIA	REMOVE	12" PINE	REMOVE	16" MAPLE	REMOVE	18" PINE	REMOVE
6" MAGNOLIA	REMOVE	12" PINE	REMOVE	16" OAK	REMOVE	18" PINE	SAVE
6" MAGNOLIA	REMOVE	12" PINE	REMOVE	16" OAK	REMOVE	18" PINE	SAVE
6" OAK	REMOVE	12" PINE	REMOVE	16" OAK	REMOVE	18" PINE	SAVE
6" RED BUD	REMOVE	12" PINE	SAVE	16" OAK	SAVE	18" PINE	SAVE
7" CHERRY	SAVE	12" PINE	SAVE	16" PINE	REMOVE	18" PINE	SAVE
7" CHERRY	SAVE	12" RED BUD	REMOVE	16" PINE	REMOVE	18" PINE	SAVE
7" CHERRY	REMOVE	12" SYCAMORE	SAVE	16" PINE	REMOVE	18" PINE	SAVE
7" CHERRY	REMOVE	13" OAK	REMOVE	16" PINE	REMOVE	18" PINE	SAVE
7" CHERRY	SAVE	13" OAK	SAVE	16" PINE	REMOVE	19' MAPLE	REMOVE
7" CRAB APPLE	REMOVE	13" PINE	REMOVE	16" PINE	REMOVE	19" BAY	REMOVE
7" OAK	REMOVE	13" PINE	REMOVE	16" PINE	REMOVE	19" CRAPE MYRTLE	REMOVE
7" OAK	SAVE	13" PINE	REMOVE	16" PINE	REMOVE	19" CRAPE MYRTLE	REMOVE
7" RED BUD	SAVE	13" PINE	REMOVE	16" PINE	REMOVE	19" PINE	REMOVE
8" CHERRY	REMOVE	13" PINE	REMOVE	16" PINE	REMOVE	19" PINE	REMOVE
8" CHERRY	REMOVE	13" PINE	SAVE	16" PINE	REMOVE	19" RED BUD	REMOVE
8" CHERRY	REMOVE	13" PINE	SAVE	16" PINE	REMOVE	20" CRAPE MYRTLE	REMOVE
8" CHERRY	SAVE	14" CRAPE MYRTLE	REMOVE	16" PINE	REMOVE	20" OAK	REMOVE
8" CHERRY	SAVE	14" DOGWOOD	REMOVE	16" PINE	REMOVE	20" PINE	REMOVE
8" CHERRY	SAVE	14" HOLLY	REMOVE	16" PINE	REMOVE	20" PINE	REMOVE
8" CHERRY	SAVE	14" HOLLY	REMOVE	16" PINE	REMOVE	20" PINE	REMOVE
8" DOGWOOD	REMOVE	14" MAGNOLIA	REMOVE	16" PINE	REMOVE	20" PINE	REMOVE
8" DOGWOOD	REMOVE	14" OAK	REMOVE	16" PINE	REMOVE	20" PINE	REMOVE
8" GUM	SAVE	14" OAK	SAVE	16" PINE	REMOVE	20" PINE	SAVE
8" HOLLY	SAVE	14" OAK	SAVE	16" PINE	REMOVE	21' RED BUD	SAVE
8" MAGNOLIA	REMOVE	14" PINE	REMOVE	16" PINE	REMOVE	21" CRAPE MYRTLE	REMOVE
8" MAPLE	REMOVE	14" PINE	REMOVE	16" PINE	REMOVE	21" CRAPE MYRTLE	REMOVE
8" OAK	REMOVE	14" PINE	REMOVE	16" PINE	REMOVE	21" PINE	SAVE
8" OAK	REMOVE	14" PINE	REMOVE	16" PINE	REMOVE	22" OAK	SAVE
8" OAK	REMOVE	14" PINE	REMOVE	16" PINE	REMOVE	22" PINE	REMOVE
8" OAK	REMOVE	14" PINE	REMOVE	16" PINE	REMOVE	22" PINE	REMOVE
9" CHERRY	REMOVE	14" PINE	REMOVE	16" PINE	REMOVE	22" PINE	SAVE
9" CHERRY	SAVE	14" PINE	REMOVE	16" PINE	SAVE	23" GUM	REMOVE
9" CHERRY	SAVE	14" PINE	REMOVE	16" PINE	SAVE	23" OAK	REMOVE
9" CHERRY	SAVE	14" PINE	REMOVE	16" PINE	SAVE	23" PINE	REMOVE
9" CHERRY	SAVE	14" PINE	REMOVE	16" PINE	SAVE	23" PINE	REMOVE
9" HOLLY	RELOCATE/SAVE	14" PINE	SAVE	16" PINE	SAVE	23" PINE	SAVE
9" HOLLY	SAVE	14" PINE	SAVE	16" PINE	SAVE	23" PINE	SAVE
9" HOLLY	SAVE	14" PINE	SAVE	16" PINE	SAVE		
10" CHERRY	REMOVE	14" PINE	SAVE	16" PINE	SAVE	24" OAK	REMOVE
10" CHERRY	REMOVE	14" PINE	SAVE	16" PINE	SAVE	25" OAK	SAVE
10" CHERRY	REMOVE	14" PINE	SAVE	16" PINE	SAVE	25" PINE	REMOVE
10" CHERRY	REMOVE	14" PINE	SAVE	16" PINE	SAVE	25" PINE	REMOVE
10" CHERRY	REMOVE	14" PINE	SAVE	16" PINE	SAVE	26" BAY	SAVE
10" CYPRUS	SAVE	14" RED BUD	SAVE	16" RED BUD	SAVE		
10" DOGW00D	SAVE	15" CEDAR	REMOVE	17" CRAPE MYRTLE	REMOVE	26" PINE	SAVE
10" GUM	SAVE	15" CRAPE MYRTLE	REMOVE	17" OAK	REMOVE	26" PINE	SAVE
10" HOLLY	RELOCATE/SAVE	15" MAGNOLIA	REMOVE	17" PINE	REMOVE	27" OAK	SAVE
10" HOLLY	REMOVE	15" MAPLE	REMOVE	17" PINE	REMOVE	28" CRAPE MYRTLE	REMOVE
10" MAGNOLIA	REMOVE	15" MIMOSA	REMOVE	17" PINE	SAVE	28" GUM	REMOVE
10" OAK	REMOVE	15" OAK	REMOVE	18" OAK	REMOVE	29" CRAPE MYRTLE	SAVE
10" OAK	REMOVE	15" PINE	REMOVE	18" OAK	REMOVE	29" MAPLE	REMOVE
10" OAK	REMOVE	15" PINE	REMOVE	18" OAK	REMOVE	30" OAK	REMOVE
10" OAK	REMOVE	15" PINE	REMOVE	18" OAK	SAVE	30" OAK	REMOVE
10" OAK	SAVE	15" PINE	REMOVE	18" PINE	REMOVE	34" CRAPE MYRTLE	SAVE
10" OAK	SAVE	15" PINE	REMOVE	18" PINE	REMOVE	38" OAK	REMOVE
10" PINE	REMOVE	15" PINE	REMOVE	18" PINE	REMOVE	45" MAPLE	REMOVE
11" OAK	SAVE	15" PINE	REMOVE	18" PINE	REMOVE		
12" CEDAR	REMOVE	15" PINE	REMOVE	18" PINE	REMOVE		
12" CRAPE MYRTLE	REMOVE	15" PINE	REMOVE	18" PINE	REMOVE		

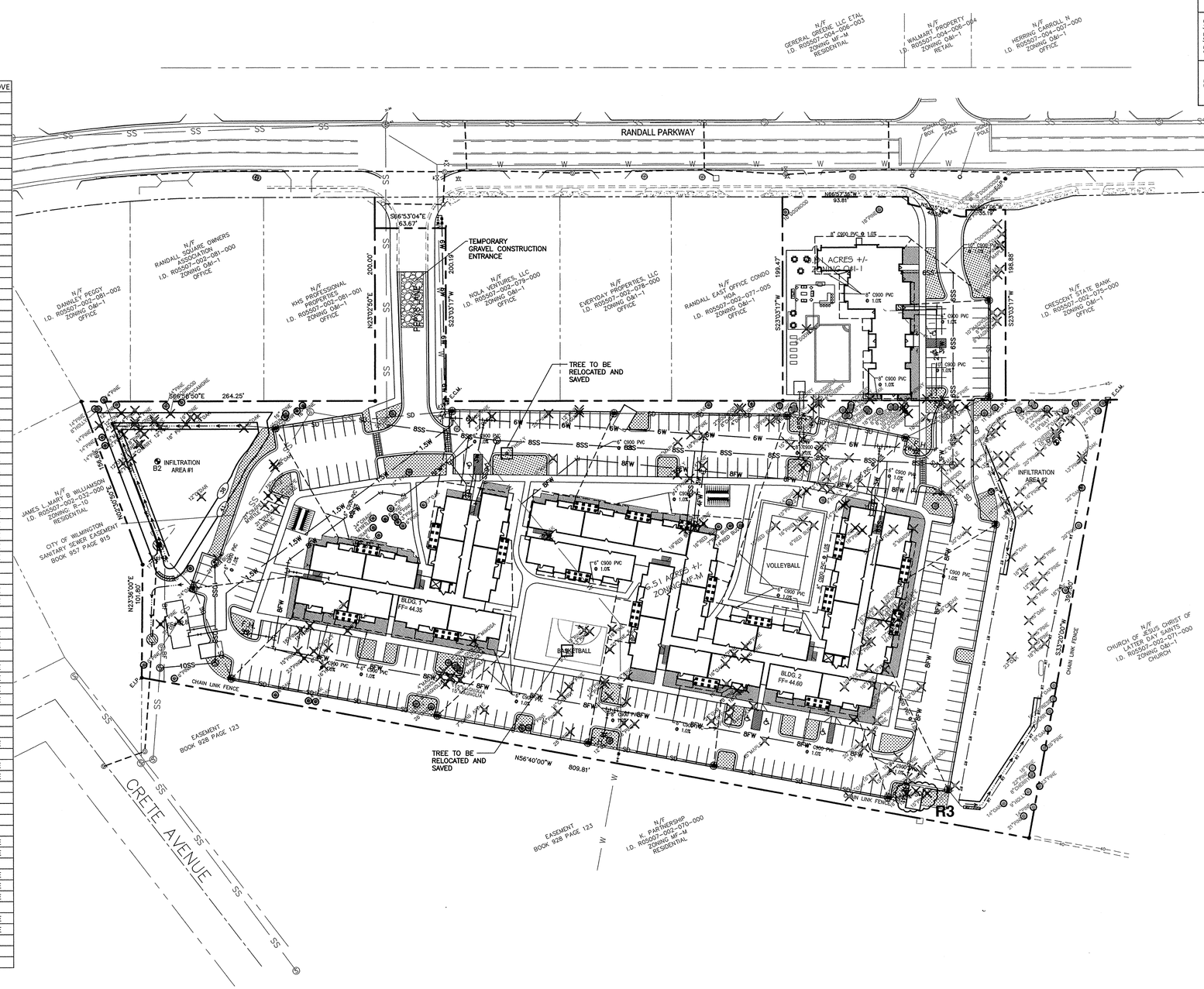

SCALE: 1" = 50'

0 50 100 150

SYMBOL	DATE	DESCRIPTION	BY
R3	03/27/13	ADDED 3 TREES TO BE REMOVED	JPN
R2	03/07/13	REVISED OWNER INFORMATION AND PROJECT ADDRESS	JPN
R1	02/06/13	UPDATED PER C.O.W. COMMENTS	JPN

REVISIONS

© 2013 NORRIS & TUNSTALL

TREE EXHIBIT
THE LIGHTHOUSE APARTMENTS
4926 RANDALL PARKWAY
WILMINGTON, NORTH CAROLINA

OWNER:
RB-WILMINGTON, LLC A A DELAWARE LIMITED LIABILITY COMPANY
2234 W. NORTH AVE.
CHICAGO, IL 60647

NORRIS & TUNSTALL
CONSULTING ENGINEERS, P.C.
1127 FLORAL PARKWAY, SUITE 400
WILMINGTON, NC. 28403
PHONE (910) 343-9653
FAX (910) 343-9604
N&T LICENSE NO. C-3641

12080

DES.	JPN
CKD.	JPN
DRWN.	EDB
DATE	03/07/13

NORTH CAROLINA PROFESSIONAL SEAL 11966 ENGINEER JOHN PHILLIP NORRIS 03/27/13