CITY OF WILMINGTON
NEW HANOVER COUNTY, NORTH CAROLINA

RIVERPLACE
(Water Street Parking Deck Redevelopment)

CITY OF WILMINGTON TRC SET - JUNE 29, 2016
NOT FOR CONSTRUCTION

DEVELOPMENT TEAM:

OWNER/DEVELOPER:
WATER STREET VENTURES, LLC
1450 ENVIRON WAY, CHAPEL HILL, NC 27517
(919) 200.3572

CITY OF WILMINGTON, NC
P.O. BOX 1810
WILMINGTON, NC 28402

OWNER'S DESIGNATED REPRESENTATIVES:
LEE PERRY, DEVELOPMENT DIRECTOR
EAST WEST PARTNERS MANAGEMENT COMPANY, INC.
1450 ENVIRON WAY, CHAPEL HILL, NC 27517
lperry@ewp-nc.com (919) 929.0660

LUCIEN ELLISON, PROJECT MANAGER
lellison@ewp-nc.com (910) 200.3572

ENGINEER/ LAND PLANNER:
McKIM & CREED, INC.
RICHARD COLLIER, PE
TARA S. MURPHY, RLA, ASLA, LEED AP, PMP
243 N. FRONT STREET, WILMINGTON, NC 28401
rcollier@mckimcreed.com (910) 343.1048
tschwenzfeier@mckimcreed.com (910) 343.1048

ARCHITECT:
DISHNER MOORE ARCHITECTS
CRAIG DISHNER, AIA
380-H KNOLLWOOD ST., SUITE 174
WINSTON-SALEM, NC 27103
craig@dishnermoore.com (339) 723.6360

STRUCTURAL ENGINEER:
KIMLEY-HORN AND ASSOCIATES, INC.
JOSH HAMBY, PE
P.O. BOX 33068 RALEIGH NC, 27636
Josh.Hamby@kimley-horn.com (919) 667.2119

MECHANICAL, ELECTRICAL & PLUMBING ENGINEER
ENGINEERED DESIGNS, INC.
GLENN KEY, PE, LEED AP
1151 SE CARY PARKWAY, SUITE 200
CARY, NC 27518
gkey@engineereddesigns.com

GENERAL CONTRACTOR:
BARNHILL CONTRACTING
JUSTIN WHITLEY
P.O. BOX 31765 RALEIGH, NC 27622
jwhitley@barnhillcontracting.com (919) 785.9167

VICINITY MAP:

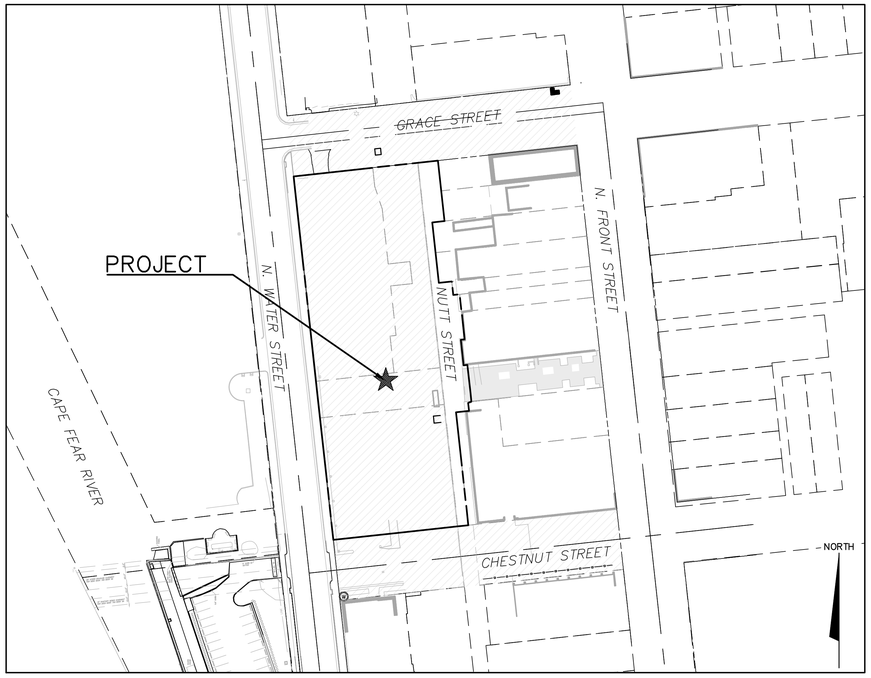

PROPERTY INFORMATION:

ADDRESS:	200, 210 & 220 N WATER STREET, 10 GRACE STREET & 101 CHESTNUT STREET, WILMINGTON, NC 28412
TAX PARCELS:	R04720-007-001-000, R04720-007-026-000, 04720-007-027-000, R04720-007-029-000 & (A PORTION OF) R04720-007-025-00
ZONING:	CBD - CENTRAL BUSINESS DISTRICT

McKIM&CREED
243 North Front Street
Wilmington, North Carolina 28401
Phone: (910)343-1048 , Fax: (910)251-8282
NC LICENSE NO. F-1222
www.mckimcreed.com

SHEET INDEX:

CIVIL AND LANDSCAPE SHEETS		
Sheet Title	Description	Scale
	COVER	NTS
G001	GENERAL NOTES	NTS
CX100	EXISTING PARCELS	1"=10'
CX101	SITE INVENTORY & TREE INVENTORY	1"=30'
CX102	ADJACENT PROPERTY OWNERS	NTS
CX103	LOWER LEVEL EXISTING CONDITIONS (NW)	1"=20'
CX104	LOWER LEVEL EXISTING CONDITIONS (SW)	1"=10'
CX105	LOWER LEVEL EXISTING CONDITIONS (NE & SE)	1"=10'
CX106	BIJOU PARK EXISTING CONDITIONS	1"=10'
CX107	UPPER LEVEL EXISTING CONDITIONS (NW)	1"=10'
CX108	UPPER LEVEL EXISTING CONDITIONS (SW)	1"=10'
CX109	UPPER LEVEL EXISTING CONDITIONS (NE & SE)	1"=10'
C100	OVERALL SHEET LEGEND	1"=20'
CD101	ENLARGED LOWER LEVEL DEMOLITION PLAN (NW)	1"=10'
CD102	ENLARGED LOWER LEVEL DEMOLITION PLAN (SW)	1"=10'
CD103	ENLARGED LOWER LEVEL DEMOLITION PLAN (NE & SE)	1"=10'
CD104	ENLARGED LOWER LEVEL DEMOLITION PLAN (BIJOU)	1"=10'
CD105	ENLARGED UPPER LEVEL DEMOLITION PLAN (NW)	1"=10'
CD106	ENLARGED UPPER LEVEL DEMOLITION PLAN (SW)	NTS
CD107	ENLARGED UPPER LEVEL DEMOLITION PLAN (NE & SE)	1"=10'
CE501	EROSION CONTROL DETAILS	NTS
CS100	OVERALL SITE PLAN	1"=20'
CS101	ENLARGED SITE PLAN (NW)	1"=10'
CS102	ENLARGED SITE PLAN (SW)	1"=10'
CS103	ENLARGED SITE PLAN (NE & SE)	1"=10'
CS104	ENLARGED SITE PLAN (BIJOU)	1"=10'
CS501	SITE DETAILS	NTS
CS502	STREETSCAPE DETAILS	NTS
CG100	OVERALL GRADING PLAN	1"=20'
CG101	ENLARGED GRADING PLAN (NW)	1"=10'
CG102	ENLARGED GRADING PLAN (SW)	1"=10'
CG103	ENLARGED GRADING PLAN (NE & SE)	1"=10'
CU101	ENLARGED UTILITY PLAN (NW)	1"=10'
CU102	ENLARGED UTILITY PLAN (SW)	1"=10'
CU103	ENLARGED UTILITY PLAN (NE & SE)	1"=10'
CU104	ENLARGED DRY UTILITY PLAN (NW)	1"=10'
CU105	ENLARGED DRY UTILITY PLAN (SW)	1"=10'
CU106	ENLARGED DRY UTILITY PLAN (NE & SE)	1"=10'
CU107	WATER STREET UTILITY PLAN	1"=10'
CU501	CFPUA UTILITY DETAILS	NTS
CU502	CFPUA UTILITY DETAILS	NTS
CU503	CFPUA UTILITY DETAILS	NTS
CU504	CFPUA UTILITY DETAILS	NTS
CU505	CFPUA UTILITY DETAILS	NTS
CU506	CFPUA UTILITY DETAILS	NTS
CU507	DUCT BANK DETAILS	1"=10'
CU508	DRY UTILITY MANHOLE DETAILS	1"=10'

ARCHITECTURE SHEETS	
Sheet Title	Sheet Title
A2-1	A2-1 – NORTH TOWER 1ST FLOOR PLAN
A2-11	A2-11 – SOUTH TOWER 1ST FLOOR PLAN
A2-13	A2-13 – SOUTH TOWER 3RD FLOOR PLAN
A5-0	A5-0 – OVERALL ELEVATIONS
A5-1	A5-1 – OVERALL BUILDING SECTION
A5-2	A5-2 – NORTH TOWER BUILDING ELEVATIONS
A5-3	A5-3 – NORTH TOWER BUILDING ELEVATIONS
A5-4	A5-4 – NORTH TOWER ELEVATIONS
A5-5	A5-5 – NORTH TOWER BUILDING ELEVATIONS
A5-6	A5-6 – SOUTH TOWER BUILDING ELEVATIONS
A5-7	A5-7 – SOUTH TOWER BUILDING ELEVATIONS
A5-8	A5-8 – SOUTH TOWER BUILDING ELEVATIONS
A5-9	A5-9 – SOUTH TOWER BUILDING ELEVATIONS

CITY OF WILMINGTON APPROVAL STAMPS:

STORMWATER MANAGEMENT PLAN
APPROVED
CITY OF WILMINGTON
ENGINEERING DEPARTMENT
DATE _____ PERMIT #_____
SIGNED_____

Approved Construction Plan
Name Date
Planning_____
Traffic_____
Fire_____

For each open utility cut of City streets, a $325 permit shall be required from the City prior to occupancy and/or project acceptance.

RIVERPLACE (WATER STREET PARKING DECK REDEVELOPMENT)
CITY OF WILMINGTON TRC SET - JUNE 29, 2016
00205-0001

S:\00205\000180\Drawing\G000_00205001.dwg, 6/29/2016 11:53:58 AM, CNunley, 11

GENERAL NOTES:

1. NO LAND DISTURBANCE INCLUDING TREE REMOVAL IS TO OCCUR OUTSIDE THE LIMITS OF DISTURBANCE SHOWN ON THE PLANS.
2. LANDSCAPING PLAN INDICATING THE LOCATION OF REQUIRED STREET TREES SHALL BE SUBMITTED TO THE CITY OF WILMINGTON TRAFFIC ENGINEERING DIVISION AND PARKS AND RECREATION DEPARTMENT FOR REVIEW AND APPROVAL PRIOR TO THE RECORDING OF THE FINAL PLAT.
3. ZONING OF ADJACENT PROPERTIES IS AS NOTED.

SEEDBED PREPARATION:

1. CHISEL COMPACTED AREAS AND SPREAD TOPSOIL 3 INCHES DEEP OVER ADVERSE SOIL CONDITIONS, IF AVAILABLE.
2. RIP THE ENTRANCE AREA TO 6 INCHES DEPTH.
3. REMOVE ALL LOOSE ROCK, ROOTS, AND OTHER OBSTRUCTIONS LEAVING SURFACE REASONABLY SMOOTH AND UNIFORM.
4. APPLY AGRICULTURAL LIME, FERTILIZER, AND SUPERPHOSPHATE UNIFORMLY AND MIX WITH SOIL (SEE BELOW*).
5. CONTINUE TILLAGE UNTIL A WELL – PULVERIZED, FIRM, REASONABLY UNIFORM SEEDBED IS PREPARED 4 TO 6 INCHES DEEP.
6. SEED ON A FRESHLY PREPARED SEEDBED AND COVER SEED LIGHTLY WITH SEEDING EQUIPMENT OR CULTIPACK AFTER SEEDING.
7. MULCH IMMEDIATELY AFTER SEEDING AND ANCHOR MULCH.
8. INSPECT ALL SEEDED AREAS AND MAKE NECESSARY REPAIRS OR RE–SEEDINGS WITHIN THE PLANTING SEASON, IF POSSIBLE. IF STAND SHOULD BE OVER 60% DAMAGED, RE–ESTABLISH FOLLOWING ORIGINAL LIME, FERTILIZER AND SEEDING RATES.
9. CONSULT CONSERVATION INSPECTOR ON MAINTENANCE TREATMENT AND FERTILIZATION AFTER PERMANENT COVER IS ESTABLISHED.
10. APPLY: AGRICULTURAL LIMESTONE – 2 TONS/ACRE
    FERTILIZER – 1000 LBS/ACRE (10–10–10)
    SUPERPHOSPHATE – 500 LBS/ACRE (20%)
    MULCH – 2 TONS/ACRE (SMALL GRAIN STRAW)
    ANCHOR – ASPHALT EMULSION AT 450 GAL/ACRE

TEMPORARY SEEDING

GRASS TYPE	AMOUNT/ 1000 S.F.	TIME OF SEEDING	INITIAL
RYE GRAIN	1-2 LBS.	APRIL - JUNE	25 LBS. 10-10-10
BROWNTOP MILLET	1-2 LBS	JUNE - AUGUST	25 LBS 10-10-10

PERMANENT SEEDING

GRASS TYPE	AMOUNT/ 1000 S.F.	TIME OF SEEDING	INITIAL
BERMUDA, COMMON	1-2 LBS.	APRIL - JUNE	25 LBS. 10-10-10
FESCUE, TALL (KENTUCKY 31)	5-7 LBS	JUNE - AUGUST FEB. - OCT.	25 LBS 10-10-10
SERICEA LESPEDEZA (SLOPES	1-2 LBS	MARCH - APRIL	25 LBS 10-10-10

GROUND STABILIZATION CRITERIA

SITE AREA DESCRIPTION	STABILIZATION TIMEFRAME	STABILIZATION TIMEFRAME EXCEPTIONS
PERIMETER DIKES, SWALES, DITCHES AND SLOPES	7 DAYS	NONE
HIGH QUALITY WATER ZONES	7 DAYS	NONE
SLOPES STEEPER THAN 3:1	7 DAYS	IF SLOPES ARE 10 FT OR LESS IN LENGTH AND ARE NOT STEEPER THAN 2:1, 14 DAYS ARE ALLOWED
SLOPES 3:1 OR FLATTER	14 DAYS	7 DAYS FOR SLOPES GREATER THAN 50 FT IN LENGTH
ALL OTHER AREAS WITH SLOPES FLATTER THAN 4:1	14 DAYS	NONE (EXCEPT FOR PERIMETERS AND HQW ZONES)

EXCAVATION, GRADING, AND BACKFILLING NOTES:

1. ANY UNDERCUTTING IN GOOD SOIL SHALL BE REPLACED AND THE REPLACEMENT MATERIAL SHALL BE COMPACTED TO NINETY–FIVE (95) PERCENT OF MAXIMUM DENSITY OBTAINED AT OPTIMUM MOISTURE CONTENT, AS DETERMINED BY THE ASTM D 698 STANDARD PROCTOR TEST METHOD.
2. IN THE EVENT THAT MATERIAL ENCOUNTERED AT PIPE GRADE, SUBGRADE OF PARKING OR ROADWAYS AND SUBGRADE OF BUILDING FOUNDATIONS IS FOUND TO BE SOFT, SPONGY, OR IN ANY OTHER WAY UNSUITABLE, THE CONTRACTOR SHALL NOTIFY THE GEOTECHNICAL ENGINEER IMMEDIATELY. SUCH UNSUITABLE MATERIAL SHALL BE REMOVED TO A DEPTH AS SPECIFIED BY THE GEOTECHNICAL ENGINEER AND REPLACED WITH A MINIMUM OF SIX (6) INCHES OF STONE, OR AS DIRECTED BY THE GEOTECHNICAL ENGINEER.
3. BEFORE BACKFILLING IS COMMENCED OVER PIPES AND OTHER INSTALLATIONS, EARTH FILL SHALL BE SOLIDLY TAMPED AROUND AND ABOVE THE PIPE TO A DEPTH OF ONE (1) FOOT ABOVE THE TOP OF THE PIPE. CARE SHALL BE TAKEN TO PREVENT ANY DISTURBANCE TO THE PIPE OR DAMAGE TO NEWLY MADE JOINTS. THE FILLING OF THE TRENCH SHALL BE CARRIED OUT SIMULTANEOUSLY ON BOTH SIDES OF THE PIPES IN SUCH A MANNER THAT INJURIOUS SIDE PRESSURES DO NOT OCCUR.
4. THE MATERIAL FOR BACKFILLING SHALL BE FREE FROM ALL PERISHABLE AND OBJECTIONABLE MATERIALS. BEFORE PLACING ANY BACKFILL, ALL RUBBISH, FORM, BLOCKS, WIRES OR OTHER UNSUITABLE MATERIAL SHALL BE REMOVED FROM EXCAVATION. THE BACK–FILLING OVER PIPES SHALL BE PLACED IN LAYERS NOT OVER SIX (6) INCHES THICK AND COMPACTED TO A MINIMUM DENSITY OF NINETY–FIVE (95) PERCENT OF THE MAXIMUM DRY DENSITY AS DETERMINED BY THE MODIFIED PROCTOR COMPACTION TEST TO A DEPTH OF 12 INCHES BELOW FINISHED GRADE. THE LAST 12 INCHES OF BACKFILL SHALL BE PLACED IN LAYERS NOT OVER SIX (6) INCHES THICK AND COMPACTED TO A MINIMUM DENSITY OF NINETY–EIGHT (98) PERCENT OF THE MAXIMUM DRY DENSITY AS DETERMINED BY THE MODIFIED PROCTOR COMPACTION TEST.

DEMOLITION NOTES:

1. THE CONTRACTOR SHALL VISIT THE SITE TO BECOME FAMILIAR WITH FIELD DEMOLITION CONDITIONS.
2. THE CONTRACTOR IS RESPONSIBLE FOR THE PROPER DISPOSAL OF ALL DEMOLISHED DEBRIS ASSOCIATED WITH THE PROJECT IN ACCORDANCE WITH THE PROJECT SPECIFICATIONS.
3. THE CONTRACTOR IS RESPONSIBLE FOR CONTROLLING DUST GENERATED BY THE WORK, INCLUDING BUT NOT LIMITED TO DEMOLITION AND CONSTRUCTION ACTIVITIES, SITE VEHICULAR TRAFFIC AND RELATED OPERATIONS.
4. THE CONTRACTOR IS RESPONSIBLE FOR HAVING ALL EXISTING UTILITIES LOCATED PRIOR TO BEGINNING ANY DEMOLITION. CONTRACTOR SHALL CONTACT THE CITY OF WILMINGTON AT LEAST 72 HOURS PRIOR TO BEGINNING CONSTRUCTION OR EXCAVATION TO HAVE EXISTING UTILITIES LOCATED.
5. EXISTING UTILITIES AND STRUCTURES SHOWN, BOTH UNDERGROUND AND ABOVE GROUND, ARE BASED ON FIELD SURVEY AND THE BEST AVAILABLE RECORD DRAWINGS. THE CONTRACTOR SHALL VERIFY FIELD CONDITIONS PRIOR TO BEGINNING RELATED CONSTRUCTION. ANY DISCREPANCIES SHALL BE REPORTED TO THE OWNER'S REPRESENTATIVE AND ENGINEER IMMEDIATELY.
6. THE CONTRACTOR IS RESPONSIBLE FOR THE COORDINATION OF DISCONNECTING AND ABANDONING ALL EXISTING UTILITIES WITH THE OWNER UNLESS OTHERWISE NOTED. ALL EXISTING UTILITIES AND ASSOCIATED PIPING, ETC. NOT IN USE ON THE SITE SHALL BE PROPERLY ABANDONED AND REMOVED AS REQUIRED. COORDINATE WITH THE OWNER.
7. THE CONTRACTOR IS RESPONSIBLE FOR THE PROTECTION OF ANY EXISTING UTILITIES THAT REMAIN IN SERVICE DURING DEMOLITION.
8. THE CONTRACTOR IS RESPONSIBLE FOR STABILIZATION OF ALL DISTURBED AREAS AND SLOPES ON AND OFF SITE IN ACCORDANCE WITH THE EROSION CONTROL MEASURES SPECIFIED ON THE PLANS AND IN THE SPECIFICATIONS. THE CONTRACTOR SHALL COORDINATE WITH THE OWNER TO DETERMINE WHO IS RESPONSIBLE FOR PROVIDING THE PERMANENT STABILIZATION MEASURES AND THE TYPE OF PERMANENT MEASURES PRIOR TO BEGINNING DEMOLITION AND CONSTRUCTION. THE PERMANENT STABILIZATION MEASURES SHALL BE IN PLACE AND ACCEPTABLE TO THE OWNER'S REPRESENTATIVE AND ENGINEER PRIOR TO PROJECT CLOSEOUT. COORDINATE INSPECTION WITH THE OWNER AND ENGINEER PRIOR TO PROJECT CLOSEOUT.
9. THE CONTRACTOR IS RESPONSIBLE FOR COORDINATING AND CONTACTING THE ENGINEER FOR THE REQUIRED INSPECTIONS ON THE PROJECT.

EROSION CONTROL NOTES:

1. ANY GRADING BEYOND THE DENUDED LIMITS SHOWN ON THE PLAN IS A VIOLATION OF THE COUNTY EROSION CONTROL ORDINANCE AND IS SUBJECT TO A FINE.
2. GRADING MORE THAN ONE ACRE WITHOUT AN APPROVED EROSION CONTROL PLAN IS A VIOLATION OF STATE LAW AND IS SUBJECT TO A FINE.
3. A GROUND COVER MUST BE PROVIDED ON EXPOSED SLOPES WITHIN 15 WORKING DAYS OR 21 CALENDAR DAYS (WHICHEVER IS SHORTER), FOLLOWING COMPLETION OF ANY PHASE OF GRADING; AND, A PERMANENT GROUND COVER FOR ALL DISTURBED AREAS WITHIN 10 WORKING DAYS OR 90 CALENDAR DAYS (WHICHEVER IS SHORTER) FOLLOWING COMPLETION OF CONSTRUCTION OR DEVELOPMENT.
4. ADDITIONAL MEASURES TO CONTROL EROSION AND SEDIMENT MAY BE REQUIRED BY A REPRESENTATIVE OF NEW HANOVER COUNTY.
5. SLOPES SHALL BE GRADED NO STEEPER THAN 3:1.
6. ADDITIONAL DEVICES MAY BE REQUIRED AS AGREED UPON BY THE FIELD INSPECTOR, ENGINEER, AND OWNER.
7. IF ACTIVE CONSTRUCTION CEASES IN ANY AREA FOR MORE THAN 15 WORKING DAYS OR 90 CALENDAR DAYS (WHICHEVER IS SHORTER), ALL DISTURBED AREAS MUST BE SEEDED, MULCHED, AND TACKED UNLESS WRITTEN APPROVAL IS GRANTED BY THE EROSION CONTROL OFFICER.

EROSION CONTROL MAINTENANCE PLAN:

1. ALL SEDIMENT AND EROSION CONTROL DEVICES SHALL BE INSPECTED AND REPAIRED, AS NECESSARY, EVERY SEVEN (7) DAYS OR AFTER EACH RAINFALL OCCURRENCE THAT EXCEEDS ONE–HALF (0.5) INCH.
2. ALL EROSION CONTROL DEVICES SHALL BE PROPERLY MAINTAINED DURING ALL PHASES OF CONSTRUCTION UNTIL THE COMPLETION OF ALL CONSTRUCTION ACTIVITIES AND ALL DISTURBED AREAS HAVE BEEN STABILIZED. ADDITIONAL CONTROL DEVICES MAY BE REQUIRED DURING CONSTRUCTION IN ORDER TO CONTROL EROSION AND/OR OFFSITE SEDIMENTATION. ALL TEMPORARY CONTROL DEVICES SHALL BE REMOVED ONCE CONSTRUCTION IS COMPLETE AND THE SITE IS STABILIZED.
3. SEDIMENT SHALL BE REMOVED FROM BEHIND THE SILT FENCE WHEN IT BECOMES ABOUT 0.5 FEET DEEP. THE SEDIMENT FENCE WILL BE REPAIRED OR REPLACED AS NECESSARY TO MAINTAIN A BARRIER.
4. ALL AREAS WILL BE FERTILIZED, RESEEDED AS NECESSARY, AND MULCHED ACCORDING TO SPECIFICATIONS IN THE VEGETATIVE PLAN TO MAINTAIN A VIGOROUS, DENSE VEGETATIVE COVER.
5. STONE CONSTRUCTION ENTRANCE TO BE CLEANED WHEN SEDIMENT ACCUMULATIONS ARE VISIBLE OR SEDIMENT IS TRACKED ON TO THE PAVEMENT. STONE WILL BE PERIODICALLY TOP DRESSED WITH 2 INCHES OF #4 STONE TO MAINTAIN 6 INCH DEPTH. THE CONTRACTOR SHALL DAILY REMOVE MUD/SOIL FROM PAVEMENT, AS REQUIRED.
6. INSPECT TEMPORARY DIVERSIONS AND CHECK DAMS ONCE A WEEK AND AFTER EVERY RAINFALL. IMMEDIATELY REMOVE SEDIMENT FROM THE FLOW AREA AND REPAIR THE DIVERSION RIDGE AND CHECK DAM. CAREFULLY CHECK OUTLETS AND MAKE TIMELY REPAIRS AS NEEDED. WHEN THE AREA PROTECTED IS PERMANENTLY STABILIZED, REMOVE THE RIDGE AND THE CHANNEL TO BLEND WITH THE NATURAL GROUND LEVEL AND APPROPRIATELY STABILIZE IT.
7. INSPECT TEMPORARY SEDIMENT BASINS AT LEAST WEEKLY AND AFTER EACH SIGNIFICANT (1/2" OR GREATER) RAINFALL EVENT AND REPAIR IMMEDIATELY. REMOVE SEDIMENT AND RESTORE THE BASIN TO ITS ORIGINAL DIMENSIONS WHEN IT ACCUMULATES TO ONE–HALF THE DESIGN DEPTH. PLACE REMOVED SEDIMENT IN AN AREA WITH SEDIMENT CONTROLS.
8. CHECK THE SEDIMENT BASIN EMBANKMENT, SPILLWAYS, AND OUTLET FOR EROSION DAMAGE, AND INSPECT THE EMBANKMENT FOR PIPING AND SETTLEMENT. MAKE ALL NECESSARY REPAIRS IMMEDIATELY. REMOVE ALL TRASH AND OTHER DEBRIS FROM THE RISER AND POOL AREA.
9. INSPECT INLETS AT LEAST WEEKLY AND AFTER EACH SIGNIFICANT (0.5" OR GREATER) RAINFALL EVENT. CLEAR THE MESH WIRE OF ANY DEBRIS OR OTHER OBJECTS TO PROVIDE ADEQUATE FLOW FOR SUBSEQUENT RAINS. TAKE CARE NOT TO DAMAGE OR UNDERCUT THE WIRE MESH DURING SEDIMENT REMOVAL. REPLACE STONE AS NEEDED. INLET PROTECTION SHOULD BE CLEANED OUT WHEN IT IS HALF FULL.
10. INSPECT TEMPORARY SEDIMENT TRAPS AT LEAST WEEKLY AND AFTER EACH SIGNIFICANT (1/2" OR GREATER) RAINFALL EVENT AND REPAIR IMMEDIATELY. REMOVE SEDIMENT AND RESTORE THE TRAP TO ITS ORIGINAL DIMENSIONS WHEN IT ACCUMULATES TO ONE–HALF THE DESIGN DEPTH. PLACE REMOVED SEDIMENT IN AN AREA WITH SEDIMENT CONTROLS.
11. REPAIR THE BAFFLES IF THEY ARE DAMAGED. RE–ANCHOR THE BAFFLES IF WATER IS FLOWING UNDERNEATH OR AROUND THEM.
12. INSPECT THE SKIMMER FOR CLOGGING. PULL THE SKIMMER TO THE SIDE OF THE BASIN AND REMOVE ANY DEBRIS. ALSO CHECK THE ORIFICE INSIDE THE SKIMMER AND THE ARM OR BARREL PIPE FOR CLOGGING; IF CLOGGED, REMOVE THE DEBRIS.
13. NOTE (G.S. 113A–57 (2)): THE ANGLE FOR GRADED SLOPES AND FILLS SHALL BE NO GREATER THAN THE ANGLE THAT CAN BE RETAINED BY VEGETATIVE COVER OR OTHER ADEQUATE EROSION CONTROL DEVICES OR STRUCTURES. IN ANY EVENT, SLOPES LEFT EXPOSED WILL, WITHIN 21 CALENDAR DAYS OF COMPLETION OF ANY GRADING, BE PLANTED OR OTHERWISE PROVIDED WITH TEMPORARY OR PERMANENT GROUND COVER, DEVICES, OR STRUCTURES SUFFICIENT TO RESTRAIN EROSION.

UTILITY NOTES:

1. WATER AND SEWER SERVICE SHALL MEET CAPE FEAR PUBLIC UTILITY AUTHORITY (CFPUA) DETAILS AND SPECIFICATIONS. SCHEDULE A PRE–CONSTRUCTION MEETING WITH CAPE FEAR PUBLIC UTILITY AUTHORITY 48 HOURS PRIOR TO CONSTRUCTION OF WATER AND SEWER LINES.
2. WATER AND SANITARY SEWER UTILITY MAINS ARE PRIVATE BEYOND THE PUBLIC STREET RIGHT–OF–WAY.
3. THIS PROJECT SHALL COMPLY WITH THE CFPUA CROSS CONNECTION CONTROL REQUIREMENTS. WATER METER(S) CANNOT BE RELEASED UNTIL ALL REQUIREMENTS ARE MET AND THE STATE HAS ISSUED THE "FINAL APPROVAL". CALL (910) 343–3910 FOR INFORMATION.
4. ALL COMMERCIAL WATER SERVICES AND ANY IRRIGATION SYSTEMS SUPPLIED BY CFPUA WATER SHALL HAVE A BACKFLOW PREVENTION DEVICE ACCEPTABLE TO CFPUA AND APPROVED BY USCFCCCHR OR ASSE.
5. ANY IRRIGATION SYSTEM SUPPLIED BY CFPUA WATER SHALL COMPLY WITH THE CFPUA CROSS CONNECTION CONTROL REGULATIONS. CALL (910) 343–3910 FOR INFORMATION.
6. ANY IRRIGATION SYSTEM SHALL BE EQUIPPED WITH A RAIN AND FREEZER SENSOR.
7. CONTRACTOR TO FIELD VERIFY EXISTING WATER AND SEWER SERVICE LOCATIONS, SIZES AND MATERIALS PRIOR TO CONSTRUCTION. ENGINEER TO BE NOTIFIED OF ANY CONFLICTS.
8. BACKFLOW PREVENTION AND METERS WILL BE PROVIDED FOR BOTH FIRE LINES (RPDA) AND DOMESTIC SERVICE (RPZ). FIRE LINE BACKFLOW PREVENTER AND DOMESTIC SERVICE BACKFLOW PREVENTER WILL BE LOCATED AS SHOWN ON THE UTILITY PLANS. INSTALLER OF BACKFLOW PREVENTERS MUST CONTACT CFPUA PRIOR TO INSTALLING UNITS TO GIVE CFPUA THE OPTION TO VERIFY INSTALLATION PROCEDURES.
   8.1. REDUCED PRESSURE PRINCIPLE ASSEMBLY FOR DOMESTIC WATER SERVICE
   8.2. REDUCE PRESSURE DETECTOR ASSEMBLY WILL BE UTILIZED FOR THE BACKFLOW PREVENTER ON THE FIRE SERVICE.
9. IF THE CONTRACTOR DESIRES CFPUA WATER FOR CONSTRUCTION HE SHALL APPLY IN ADVANCE FOR THIS SERVICE AND MUST PROVIDE A REDUCED PRESSURE ZONE (RPZ) BACKFLOW PREVENTION DEVICE ON THE DEVELOPER'S SIDE OF THE WATER METER BOX.
10. WATER: 1.5" & 2" PVC MAINS SHALL BE CONSTRUCTED USING ASTM D2241, IPS, GASKETED PIPE, SDR 21. 4"–12" PVC MAINS AND SERVICES SHALL BE CONSTRUCTED USING AWWA C–900 PVC, CL235 (DR–18).
11. SANITARY SEWER: FOR PIPE SIZES 4" AND 6" PIPE SHALL BE SCH 40 CONFORMING TO THE REQUIREMENTS OF ASTM D1785 WITH SOLVENT WELD JOINTS CONFORMING TO ASTM D2672. FOR PIPE SIZES 8" THROUGH 12", PIPE SHALL BE CLASS 150, DR18 CONFORMING TO THE REQUIREMENTS OF AWWA C900 WITH ELASTOMERIC PUSH–ON JOINTS CONFORMING TO ASTM D3212 OR ASTM D3139.
12. WATER AND SEWER SERVICES CANNOT BE ACTIVATED ON NEW MAINS UNTIL ENGINEER'S CERTIFICATION AND AS–BUILTS ARE RECEIVED AND "FINAL APPROVAL" ISSUED BY PUBLIC WATER SUPPLY SECTION OF NCDENR AND "FINAL ENGINEERING CERTIFICATION" ISSUED BY DIVISION OF WATER QUALITY OF NCDENR.
13. PVC WATER MAINS AND POLYETHYLENE SERVICES ARE TO BE MARKED WITH NO. 10 SINGLE STRAND INSULATED COPPER WIRE INSTALLED THE ENTIRE LENGTH AND STRAPPED TO THE PIPES WITH DUCT TAPE. THE INSULATED WIRE IS TO BE STRIPPED TO BARE WIRE AND SECURED TO ALL VALVES. THIS WIRE IS TO BE ACCESSIBLE AT ALL FIRE HYDRANTS AND WATER METER BOXES TO AID IN FUTURE LOCATION OF FACILITIES.
14. SITE UTILITY CONTRACTOR TO PROVIDE WATER AND SANITARY SEWER SERVICE TO WITHIN 5 FEET OF THE BUILDING. CONTRACTOR SHALL COORDINATE SITE PLAN CONNECTIONS WITH THE ARCHITECTURAL BUILDING PLANS.
15. MAXIMUM BENDING RADIUS FOR 8" C–900 PVC WATER MAIN BENDS IS 380' (ONE–HALF MANUFACTURER'S RECOMMENDED ALLOWABLE LONGITUDINAL BENDING).
16. UNDERGROUND UTILITIES: ALL NEW UTILITIES SHALL BE INSTALLED UNDERGROUND, EXCEPT WHERE SUCH PLACEMENT IS PROHIBITED OR DEEMED IMPRACTICAL BY THE UTILITY PROVIDER. UNDERGROUND TERMINAL FACILITIES FOR STREET LIGHTING ALONG THE PUBLIC STREETS ABUTTING THE SUBJECT SITE SHALL BE INSTALLED BY THE DEVELOPER.
17. MINIMUM OF 36" COVERAGE ABOVE ALL WATERMAINS.
18. MINIMUM OF 36" VERTICAL SEPARATION BETWEEN WATERLINES AND STORMDRAIN CURB INLETS.
19. RELATION OF WATER MAINS TO SEWERS:

LATERAL SEPARATION OF SEWERS AND WATER MAINS: WATER MAINS SHALL BE LAID AT LEAST 10 FEET LATERALLY FROM EXISTING OR PROPOSED SEWERS UNLESS LOCAL CONDITIONS OR BARRIERS PREVENT A 10 FOOT LATERAL SEPARATION, IN WHICH CASE:
- THE WATER MAIN IS LAID IN A SEPARATE TRENCH, WITH THE ELEVATION OF THE BOTTOM OF THE WATER MAIN AT LEAST 18 INCHES ABOVE THE TOP OF THE SEWER, OR
- THE WATER MAIN IS LAID IN THE SAME TRENCH AS THE SEWER WITH THE WATER MAIN LOCATED AT ONE SIDE ON A BENCH OF UNDISTURBED EARTH, AND ABOVE THE TOP OF THE SEWER.

CROSSING A WATER MAIN OVER A SEWER MAIN: WHENEVER IT IS NECESSARY FOR A WATER MAIN TO CROSS OVER A SEWER THE WATER MAIN SHALL BE LAID AT SUCH AN ELEVATION THAT THE BOTTOM OF THE WATER MAIN IS AT LEAST 24 INCHES ABOVE THE TOP OF THE SEWER MAIN. UNLESS LOCAL CONDITIONS OR BARRIERS PREVENT A 24 INCH VERTICAL SEPARATION – IN WHICH CASE BOTH THE WATER MAIN AND THE SEWER MAIN SHALL BE CONSTRUCTED OF FERROUS MATERIALS AND WITH JOINTS THAT ARE EQUIVALENT TO WATER MAIN STANDARDS FOR A DISTANCE OF 10 FEET ON EACH SIDE OF THE POINT OF CROSSING.

CROSSING A WATER MAIN UNDER A SEWER MAIN: WHENEVER IT IS NECESSARY FOR A WATER MAIN TO CROSS UNDER A SEWER MAIN BOTH THE WATER MAIN AND THE SEWER MAIN SHALL BE CONSTRUCTED OF FERROUS MATERIALS AND WITH JOINTS EQUIVALENT TO WATER MAIN STANDARDS FOR A DISTANCE OF 10 FEET ON EACH SIDE OF THE POINT OF CROSSING.

CROSSING A SEWER MAIN/WATER MAIN OVER OR UNDER A STORM DRAIN: WHENEVER IT IS NECESSARY FOR A SEWER MAIN/WATER MAIN TO CROSS A STORM DRAIN PIPE, THE SEWER MAIN/WATER MAIN SHALL BE LAID AT SUCH AN ELEVATION THAT THE OUTSIDE OF THE SEWER MAIN/WATER MAIN NEAREST TO THE OUTSIDE OF THE STORM DRAIN PIPE SHALL MAINTAIN A 24 INCH CLEAR SEPARATION DISTANCE HORIZONTAL, OR THE SEWER MAIN/WATER MAIN SHALL EITHER BE CONSTRUCTED OF DUCTILE IRON PIPE OR ENCASED IN EITHER CONCRETE OR DUCTILE IRON PIPE FOR AT LEAST 10 FEET ON EITHER SIDE OF THE CROSSING.

UTILITY MARKING:

ALL UNDERGROUND UTILITY LINES OUTSIDE OF THE BUILDING FOOTPRINT, EXCEPT LAWN IRRIGATION LINES, SHALL HAVE WARNING TAPE INSTALLED IN THE BACKFILL BETWEEN 6" TO 24" BELOW FINISHED GRADE, DIRECTLY OVER PIPING.

1. METALLIC LINES SHALL BE IDENTIFIED WITH PRINTED DURABLE PLASTIC WARNING TAPE, MINIMUM 3" WIDTH AT 12" BELOW FINISHED GRADE, WITH LETTERING TO IDENTIFY BURIED LINE BELOW.
2. NON–METALLIC LINES, OTHER THAN GAS LINES, SHALL BE IDENTIFIED BY DETECTABLE WARNING TAPE, MINIMUM 2" WIDTH AT 12" BELOW FINISHED GRADE, WITH LETTERING TO IDENTIFY BURIED LINE BELOW.
3. 2009 NC GAS CODE 404.14.3 TRACER: AN INSULATED COPPER WIRE OR OTHER APPROVED CONDUCTOR SHALL BE INSTALLED ADJACENT TO UNDERGROUND NON–METALLIC LINES. ACCESS SHALL BE PROVIDED TO THE TRACER WIRE OR THE TRACER WIRE SHALL TERMINATE ABOVE GROUND AT THE END OF THE NON–METALLIC LINES. THE TRACER WIRE SIZE SHALL NOT BE LESS THAN 18 AWG AND THE INSULATION TYPE SHALL BE SUITABLE FOR DIRECT BURIAL.

STORM DRAINAGE AND GRADING NOTES:

1. IN ACCORDANCE WITH NC GENERAL STATUTES, NPDES REGULATIONS, AND NCDENR REQUIREMENTS, STORMWATER DISCHARGE OUTFALLS SHALL BE INSPECTED BY THE CONTRACTOR. INSPECTIONS SHALL BE PERFORMED BY THE CONTRACTOR AFTER EACH STORM EVENT OF 1/2 INCH OR GREATER, WITH ONE WEEKLY INSPECTION MINIMUM. NCDENR STANDARD INSPECTION REPORTS SHALL BE PREPARED AND SIGNED WITH COPIES PROVIDED TO THE OWNER, ARCHITECT, AND ENGINEER, BY THE CONTRACTOR.
2. INLET PROTECTION SHALL BE INSTALLED AROUND OUTFALL. DEVICES SHALL BE CONSTRUCTED TO FINAL PROPOSED CONDITION UPON STABILIZATION OF CONTRIBUTING GROUND SURFACES AND REMOVAL OF SEDIMENT FROM STORM PIPES.
3. SEDIMENT/EROSION DEVICES SHALL BE CHECKED BY THE CONTRACTOR DAILY. EACH DEVICE IS TO BE MAINTAINED OR REPLACED IF SEDIMENT ACCUMULATION HAS REACHED ONE HALF THE CAPACITY OF THE DEVICE.
4. ALL DIMENSIONS AND GRADES SHOWN ON THE PLANS SHALL BE FIELD VERIFIED BY THE CONTRACTOR PRIOR TO CONSTRUCTION. CONTRACTOR SHALL NOTIFY CONSTRUCTION MANAGER IF ANY DISCREPANCIES EXIST PRIOR TO PROCEEDING WITH CONSTRUCTION FOR NECESSARY PLAN OR GRADE CHANGES. NO EXTRA COMPENSATION SHALL BE PAID TO CONTRACTOR FOR ANY WORK DONE DUE TO DIMENSIONS OR GRADES SHOWN INCORRECTLY ON THESE PLANS IF SUCH NOTIFICATION HAS NOT BEEN GIVEN.
5. UNLESS OTHERWISE NOTED, GRADES AND SPOT ELEVATIONS NOTED ON PLANS INDICATE FINISHED GRADE OR PAVEMENT SURFACE. ALL DIMENSIONS ARE MEASURED TO THE BACK OF CURB UNLESS OTHERWISE INDICATED.
6. ALL AREAS TO BE GRADED SO THAT NO AREAS OF STANDING WATER OCCUR.

PARKING FACILITY DESIGN NOTES (SD 15-13)

1. STREET SIGN AND PAVEMENT MARKING APPROVALS ARE REQUIRED FROM TRAFFIC ENGINEERING AT 341–7888.
2. TRAFFIC ENGINEERING MUST APPROVE PAVEMENT MARKING LAYOUT PRIOR TO ACTUAL STRIPING.
3. A UTILITY CUT PERMIT IS REQUIRED FOR EACH OPEN CUT OF A CITY STREET.
4. WHEEL STOPS SHALL BE REQUIRED THREE (3) FEET FROM THE END OF PARKING STALL WHEN USING EIGHTEEN (18) FEET DEEP STALLS.
5. CURBING, CROSSTIES, UTILITY POLES, ETC., CAN BE USED AS WHEEL STOPS. (MUST BE ANCHORED DOWN)
6. TACTILE WARNING MATS ARE TO BE INSTALLED ON ALL WHEELCHAIR RAMPS.
7. ALL TRAFFIC CONTROL SIGNS AND MARKINGS OFF THE RIGHT–OF–WAY ARE TO BE MAINTAINED BY THE PROPERTY OWNER.
8. ALL PARKING STALL MARKINGS AND LANE ARROWS SHALL BE WHITE.
9. ALL PAVEMENT MARKINGS REGULATING TRAFFIC FLOW MUST BE THERMOPLASTIC.
10. ALL OTHER PAVEMENT MARKINGS, SIGNS OR OTHER TRAFFIC CONTROL DEVICES SHALL CONFORM TO THE LATEST EDITION AND/OR INTERPRETATION OF THE MANUAL ON UNIFORM TRAFFIC CONTROL DEVICES (MUTCD).
11. NO OBSTRUCTIONS WILL BE ALLOWED ADJACENT TO A PARKING STALL WHICH WOULD PREVENT SAFE INGRESS AND EGRESS FROM A PARKED VEHICLE.
12. PARKING IN FIRE LANES AND IN NON–RESIDENTIAL DRIVEWAYS SHALL BE PREVENTED BY STANDARD SIGNS AND AS NEEDED BY PORTABLE BARRICADES.

ADDITIONAL TREATMENTS:

1. HVAC EQUIPMENT, AIR CONDITIONING WINDOW UNITS, AND OTHER ELECTRICAL EQUIPMENT SHALL NOT BE LOCATED ON STREET FRONTAGES. ALL SUCH EQUIPMENT SHALL BE PLACED IN THE INTERIOR YARDS OR ON THE ROOF OF THE BUILDING AND SCREENED FROM THE RIGHT OF WAY. THROUGH–WALL MECHANICAL UNITS ARE PERMITTED ON ANY FACADE IF THEY ARE INCORPORATED INTO THE DESIGN OF THE BUILDING, FLUSH WITH THE FACADE ON WHICH THEY ARE LOCATED, CONCEALED BY A VENT COVER AND HAVE AN INTERNAL DRIP SYSTEM FOR CONDENSATION. UTILITY METERS, TRANSFORMERS AND FIXED TRASH DISPOSAL RECEPTACLES THAT CANNOT BE CONCEALED FROM THE PUBLIC RIGHT OF WAY SHALL BE SCREENED WITH AN OPAQUE FENCE OR WALL.

SOLID WASTE:

1. SOLID WASTE DISPOSAL FOR THE RESIDENTIAL UNITS WILL BE VIA COMPACTOR AND ROLL OUT TO GRACE STREET AND WATER STREET. RESIDENTIAL RECYCLING WILL BE ROLLED OUT TO GRACE STREET AND WATER STREET. COMMERCIAL TRASH/RECYCLING WILL BE VIA CITY OF WILMINGTON.

CITY OF WILMINGTON STANDARD NOTES:

1. CONTACT THE NORTH CAROLINA ONE CALL CENTER PRIOR TO DOING ANY DIGGING AT 1–800–632–4949.
2. ALL PAVEMENT MARKINGS IN PUBLIC RIGHTS–OF–WAY AND FOR DRIVEWAYS ARE TO BE THERMOPLASTIC AND MEET CITY AND/OR NCDOT STANDARDS.
3. ONCE STREETS ARE OPEN TO TRAFFIC, THE DEVELOPER SHALL CONTACT TRAFFIC ENGINEERING TO REQUEST INSTALLATION OF TRAFFIC AND STREET NAME SIGNS. PROPOSED STREET NAMES MUST BE APPROVED PRIOR TO INSTALLATION OF STREET NAME SIGNS.
4. TRAFFIC CONTROL DEVICES (INCLUDING SIGNS AND PAVEMENT MARKINGS) IN AREAS OPEN TO PUBLIC TRAFFIC ARE TO MEET MUTCD (MANUAL ON UNIFORM TRAFFIC CONTROL DEVICES) STANDARDS.
5. ANY BROKEN OR MISSING SIDEWALK PANELS AND CURBING SHALL BE REPLACED BY THE CONTRACTOR.
6. CONTACT KAREN DIXON AT (910) 341–7888 TO DISCUSS STREET LIGHTING OPTIONS.
7. THE NUMBER AND SPACING OF DRIVEWAYS FOR ALL INTERCONNECTED SITES WILL BE DETERMINED BY THE COMBINED FRONTAGE OF THE INTERCONNECTED PROPERTIES.
8. CONTACT TRAFFIC ENGINEERING AT (910) 341–7888 TO ENSURE THAT ALL TRAFFIC SIGNAL FACILITIES AND EQUIPMENT ARE SHOWN ON THE PLAN.
9. CALL TRAFFIC ENGINEERING FORTY–EIGHT HOURS PRIOR TO ANY EXCAVATION IN THE RIGHT–OF–WAY.
10. TRAFFIC ENGINEERING MUST APPROVE OF PAVEMENT MARKING PRIOR TO ACTUAL STRIPING.
11. TACTILE WARNING MATS ARE TO BE INSTALLED ON ALL WHEELCHAIR RAMPS.
12. ALL PARKING STALL MARKINGS AND LANE ARROWS WITHIN THE PARKING AREAS SHALL BE WHITE.
13. ALL TRAFFIC CONTROL SIGNS AND MARKINGS OFF THE RIGHT–OF–WAY ARE TO BE MAINTAINED BY THE PROPERTY OWNER.
14. STOP SIGNS AND STREET SIGNS TO REMAIN IN PLACE DURING CONSTRUCTION.
15. A UTILITY CUT PERMIT IS REQUIRED FOR EACH OPEN CUT OF A CITY STREET.
16. NO OBSTRUCTIONS ARE PERMITTED IN THE SPACE BETWEEN THIRTY (30) INCHES AND TEN (10) FEET ABOVE THE GROUND WITHIN THE TRIANGULAR SIGHT DISTANCE.

TREE PROTECTION NOTES:

1. PRIOR TO ANY CLEARING, GRADING, OR CONSTRUCTION ACTIVITY, TREE PROTECTION FENCING WILL BE INSTALLED AROUND PROTECTED TREES OR GROVES OF TREES. NO CONSTRUCTION WORKERS, TOOLS, MATERIALS OR VEHICLES ARE PERMITTED WITHIN THE TREE PROTECTION FENCING.
2. NO LAND DISTURBANCE, INCLUDING TREE REMOVAL, IS TO OCCUR OUTSIDE THE PROJECT BOUNDARY SHOWN ON THE PLANS, UNLESS OTHERWISE NOTED. TREE PROTECTION FENCING IS SHOWN OUTSIDE OF PROJECT BOUNDARY FOR PROTECTION OF EXISTING TREES IN CLOSE PROXIMITY TO PROPOSED CONSTRUCTION. [18–457(B)]
3. PROTECTIVE FENCING IS TO BE PROPERLY MAINTAINED THROUGHOUT THE DURATION OF THE PROJECT AND CONTRACTOR SHALL RECEIVE ADEQUATE INSTRUCTIONS ON TREE PROTECTION METHODS. [18–458]
4. LAND CLEARING AND CONSTRUCTION CONTRACTORS SHALL RECEIVE ADEQUATE INSTRUCTION ON TREE PROTECTION REQUIREMENTS AND METHODS. [18–457(D)]
5. NO EQUIPMENT IS ALLOWED ON THE SITE UNTIL ALL TREE PROTECTION FENCING AND SILT FENCING HAS BEEN INSTALLED AND APPROVED BY THE LANDSCAPE ARCHITECT. [18–458]
6. ANY TREES AND/OR AREAS DESIGNATED TO BE PROTECTED MUST BE PROPERLY BARRICADED WITH FENCING AND PROTECTED THROUGHOUT CONSTRUCTION TO INSURE THAT NO CLEARING AND GRADING OR STAGING OF MATERIALS WILL OCCUR IN THOSE AREAS. [18–458]
7. REGULATED AND SIGNIFICANT TREES IN THE STREET YARD [18–456(C)] AND ANY TREES IN ANY REQUIRED BUFFERS [18–456(B)] ARE REQUIRED TO BE RETAINED. TREE PROTECTION FENCING SHOWN ON PLANS DELINEATES TREES TO BE RETAINED.

FIRE PROTECTION NOTES:

1. FIRE SPRINKLERS WILL BE PROVIDED FOR BUILDING.
2. HYDRANT MUST BE WITHIN 150' OF THE FDC.
3. THE FDC MUST BE WITHIN 40' OF FIRE APPARATUS PLACEMENT.
4. LANDSCAPING OR PARKING CANNOT BLOCK OR IMPEDE THE FDC OR FIRE HYDRANTS. A 3–FOOT CLEAR SPACE SHALL BE MAINTAINED AROUND THE CIRCUMFERENCE OF THE HYDRANT AND FDC.
5. HYDRANTS MUST BE LOCATED WITHIN 8' OF THE CURB.
6. COMBUSTIBLE MATERIALS MAY NOT BE STORED OR ERECTED ONSITE WITHOUT CITY FIRE INSPECTOR APPROVAL.
7. NEW HYDRANTS MUST BE AVAILABLE FOR USE PRIOR TO CONSTRUCTION OF THE BUILDING(S).
8. UNDERGROUND FIRE LINE AND PRIVATE WATER MAINS MUST BE PERMITTED AND INSPECTED BY THE WILMINGTON FIRE DEPARTMENT FROM THE PUBLIC RIGHT–OF–WAY TO THE BUILDING. CONTACT THE WILMINGTON FIRE DEPARTMENT DIVISION OF FIRE AND LIFE SAFETY AT 910–341–0696.
9. A MINIMUM OF 5' SHALL SEPARATE UNDERGROUND FIRE LINES OR PRIVATE WATER MAINS FROM UNDERGROUND UTILITIES
10. CONTRACTOR SHALL MAINTAIN AN ALL WEATHER ACCESS FOR EMERGENCY VEHICLES AT ALL TIMES DURING CONSTRUCTION.
11. TEMPORARY STREET SIGNS SHALL BE INSTALLED AT EACH STREET INTERSECTION WHEN CONSTRUCTION OF NEW ROADWAYS ALLOWS PASSAGE BY VEHICLES.

DMA Architecture PLLC
380-H Knollwood Street, Suite 174
Winston-Salem, NC 27103
phone: 336-723-6360
dishnermoore.com

MCKIM&CREED
243 North Front Street
Wilmington, North Carolina 28401
Phone: (910)343-1048 , Fax: (910)251-8282
www.mckimcreed.com

revisions:
A - CITY OF WILMINGTON TRC SUBMITTAL 06/29/16

RIVERPLACE
(Water Street Parking Deck Redevelopment)
Block 190, City of Wilmington
Wilmington Township
New Hanover County, NC 28412

date: 06-29-16
job no. MCE 0205-0001

© 2016 DMA Architecture PLLC

NORTH CAROLINA PROFESSIONAL ENGINEER SEAL 022574 RICHARD M. COLLIER 06/29/2016

GENERAL NOTES

G-001

S:\0205\0001\80-Drawings\G001_02050001.dwg, 6/29/2016 11:54:15 AM, CNursey, 1:1

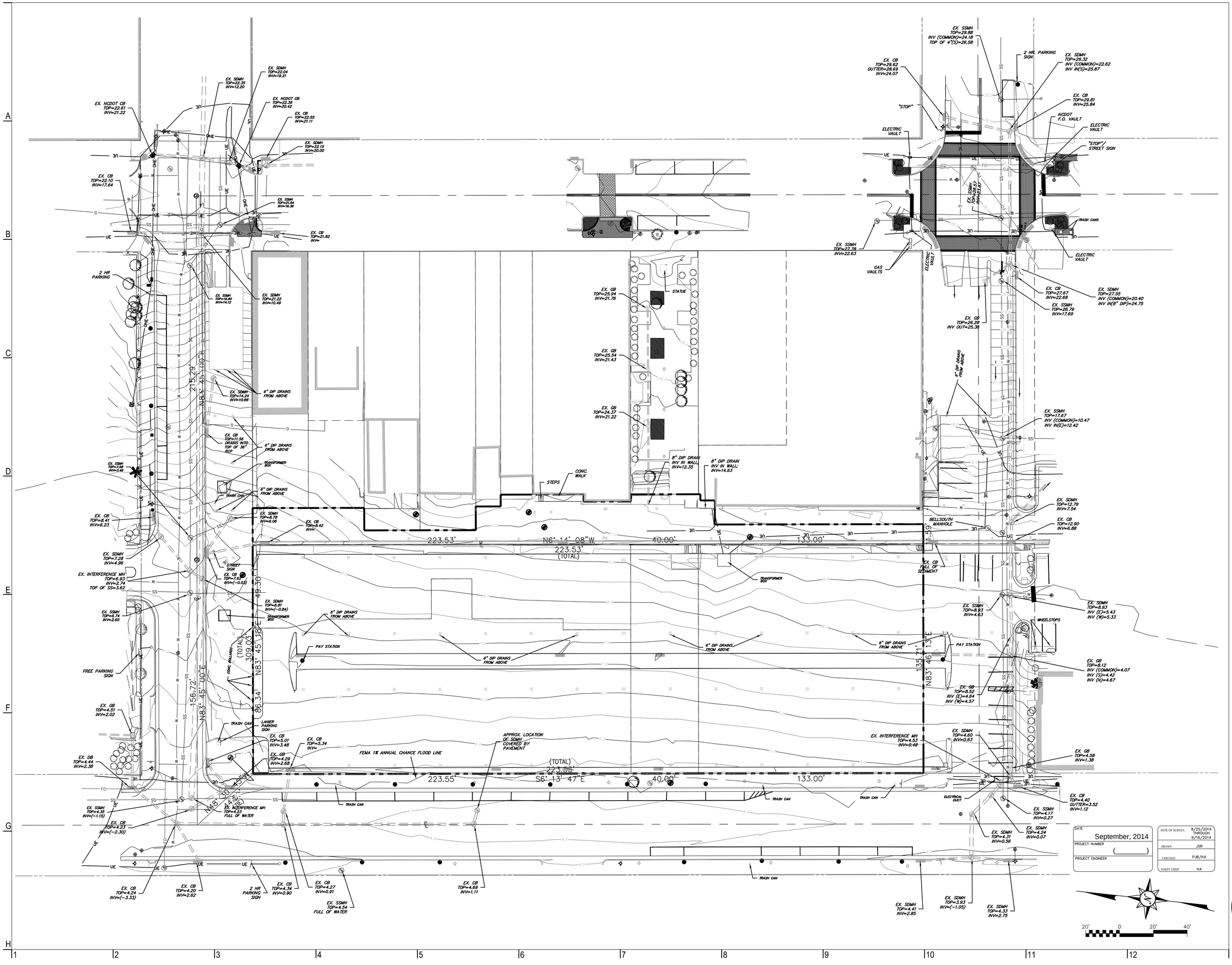

DMA Architecture PLLC
380-H Knollwood Street, Suite 174
Winston-Salem, NC 27103
phone: 336-723-6360
dishmermoore.com

McKIM & CREED
243 North Front Street
Wilmington, North Carolina 28401
Phone: (910)343-1048 , Fax: (910)251-8282
www.mckimcreed.com

revisions:
A - CITY OF WILMINGTON TRC SUBMITTAL 06/29/16

RIVERPLACE
(Water Street Parking Deck Redevelopment)

Block 190, City of Wilmington
Wilmington Township
New Hanover County, NC 28412

date: 06-29-16
job no. MCE 0205-0001

© 2016 DMA Architecture PLLC

NORTH CAROLINA SEAL 022574 ENGINEER RICHARD M. COLLIER 06/29/2016

DATE	September, 2014
PROJECT NUMBER	
PROJECT ENGINEER	

DATE OF SURVEY:	8/25/2014 THROUGH 9/16/2014
DRAWN	JSR
CHECKED	PJB/HA
PARTY CHIEF	HA

EXISTING PARCELS

CX-100

S:\0205\0001\80-Drawings\CX100_0205001.dwg, 6/29/2016 11:54:42 AM, CNunley, 11

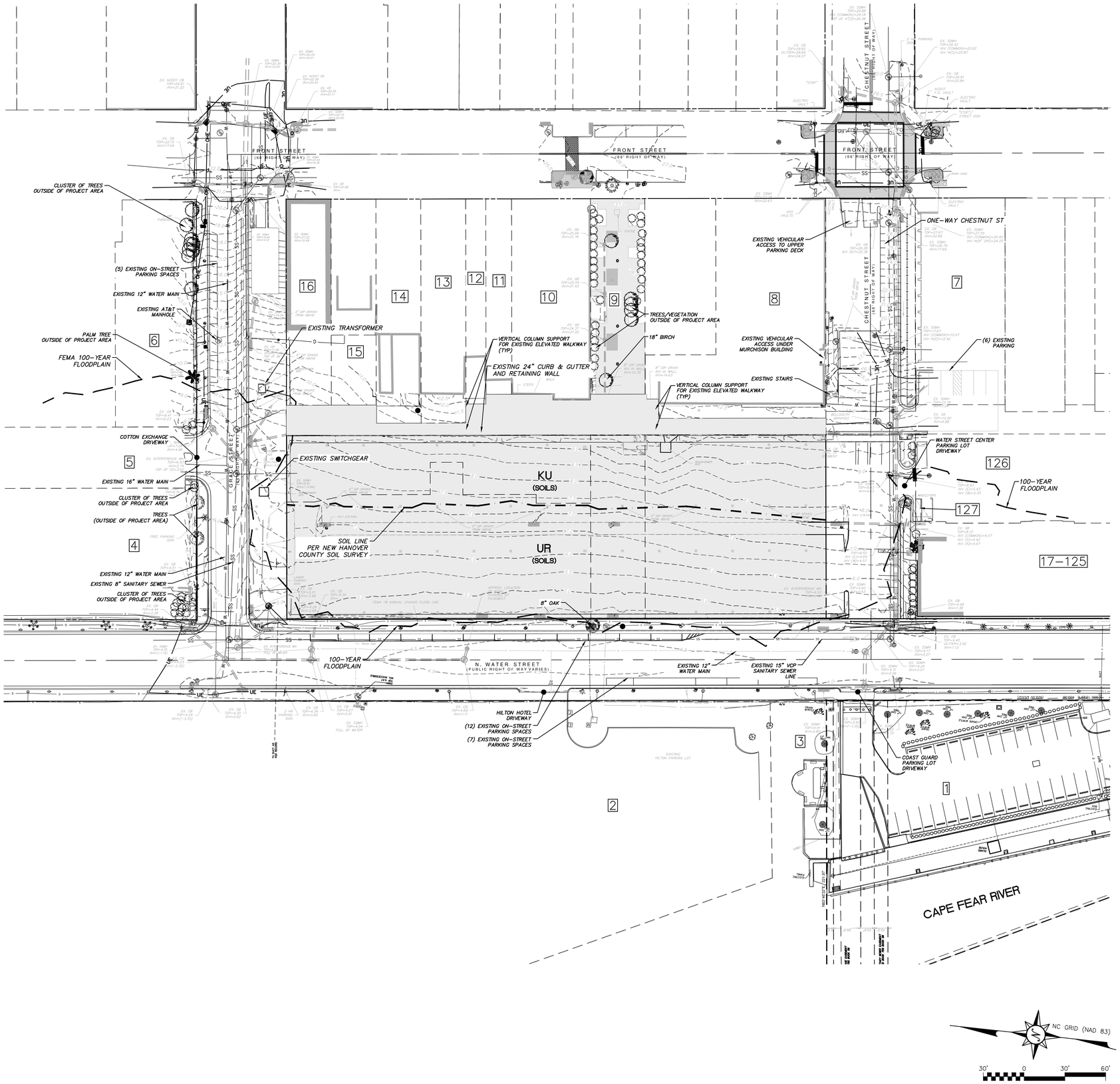

6 SITE INVENTORY

Scale: 1"=30'-0"

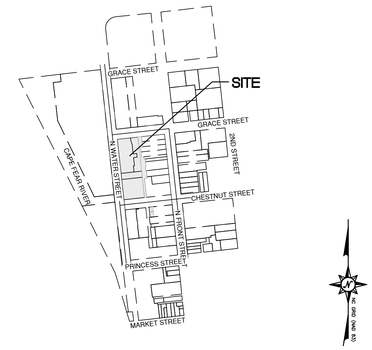

5 VICINITY MAP — Scale: 1"=400'-0"

1 ADJACENT PROPERTY OWNER LABEL
SEE CORRESPONDING LINE ON SHEET CX-102

4 LEGEND

1. PARKING DECK SURVEY PROVIDED BY THE CITY OF WILMINGTON. DATE – 09/16/2014
2. WATER STREET SURVEY PROVIDED BY WK DICKSON. DATE – 07/06/2015
3. WATER STREET PLANS & RIVERFRONT PARK IMPROVEMENTS PLANS FROM CITY OF WILMINGTON. DATES – 12/18/2015 & JUNE 2016
4. SOIL INFORMATION FROM WEB SOIL SURVEY (websoilsurvey.sc.egov.usda.gov). DOWNLOAD DATE – 03/29/2016.
5. ALL PARCEL INFORMATION FROM NEW HANOVER COUNTY GIS (maps.nhcgov.com). DATE – 03/9/2016.
6. FOR ADJACENT PROPERTY OWNER AND USE INFORMATION, SEE SHEET CX-102.
7. ALL ADJACENT PROPERTIES LISTED ARE ZONED CBD.

3 SOURCE OF INFORMATION AND NOTES

GENERAL INFORMATION		
APPLICANT NAME	WATER STREET VENTURES, LLC	
SITE ADDRESSES	200 N WATER STREET	
	210 N WATER STREET	
	220 N WATER STREET	
	10 GRACE STREET	
	101 CHESTNUT STREET	
PROPERTY OWNER/DEVELOPER	CITY OF WILMINGTON	
MAP SCALE	1"=30'	
PROPERTY BOUNDARY		
TAX PARCEL IDENTIFICATION NUMBERS	R04720-007-026-000	
	R04720-007-027-000	
	R04720-007-029-000	
	R04720-007-001-000	
	R04720-007-025-000 (PORTION OF)	
ZONING DISTRICT	CBD	
RECOMBINED PROPERTY	1.23	
PROJECT ACREAGE	2.61	
TOPOGRAPHY AND DRAINAGE		
DATE OF TOPOGRAPHY DATA	6/15/2015	
100-YR FLOODPLAIN LINE	SEE MAP	
LOCATION OF NATURAL WATER FEATURES	LOCATION	CLASSIFICATION
DITCHES, STREAMS, CREEKS	CAPE FEAR RIVER	SC
FLOOD PRONE AREAS	SEE MAP	
AREAS OF NATURALLY CONCENTRATED SURFACE DRAINAGE	N/A	
SOIL (USDA SOIL SURVEY)		
SOIL TYPE(S) AND BOUNDARIES	SEE MAP FOR BOUNDARIES	
NORTH CAROLINA COASTAL AREA MANAGEMENT ACT INFORMATION		
CAMA AREA OF ENVIRONMENTAL CONCERN	NONE IDENTIFIED	
SETBACKS	N/A	
CAMA LAND USE CLASSIFICATION(S)	URBAN	
CONSERVATION RESOURCE REGULATIONS		
PRESENCE OF CONSERVATION RESOURCE	NONE	
SETBACKS	N/A	
VEGETATED BUFFER	N/A	
HISTORIC AND ARCHEOLOGICAL SITES		
LOCAL, STATE,OR FEDERALLY RECOGNIZED HISTORIC STRUCTURE(S) OR ARCHEOLOGICAL RESOURCES	NONE IDENTIFIED	
LOCATION	N/A	
CEMETERIES		
CEMETERIES, BURIAL SITES, OR BURIAL GROUNDS	NONE IDENTIFIED	
FORESTED AREAS		
BOUNDARIES OF FORESTED AREAS	NONE	
FOREST AREA	N/A	
HABITAT	N/A	
DOMINANT SPECIES	N/A	
WETLANDS		
404/SECTION 10 WETLAND LOCATION	NONE	
METHOD OF DETERMINATION	N/A	
IMPACTED WETLANDS	N/A	
ENDANGERED SPECIES OR HABITAT		
ENDANGERED SPECIES OR HABITAT IN PROJECT AREA	NONE IDENTIFIED	
AUTOMOBILE, BICYCLE, PEDESTRIAN, OR TRANSIT FACILITIES		
EXISTING OR PROPOSED THOROUGHFARES, BIKE ROUTES, PEDESTRIAN SIDEWALKS OR TRAILS, AND TRANSIT FACILITIES	NONE (PUBLIC PEDESTRIAN SIDEWALKS AS SHOWN ON DRAWING)	

2 SITE INVENTORY DATA

STORMWATER MANAGEMENT PLAN
APPROVED
CITY OF WILMINGTON
ENGINEERING DEPARTMENT
DATE _____ PERMIT #_____
SIGNED_____

Approved Construction Plan

	Name	Date
Planning		
Traffic		
Fire		

For each open utility cut of City streets, a $325 permit shall be required from the City prior to occupancy and/or project acceptance.

1 APPROVALS

DMA Architecture PLLC
380-H Knollwood Street, Suite 174
Winston-Salem, NC 27103
phone: 336-723-6360
dishnermoore.com

McKIM & CREED
248 North Front Street
Wilmington, North Carolina 28401
Phone: (910)343-1048 . Fax: (910)251-8282
www.mckimcreed.com

revisions:
A - CITY OF WILMINGTON TRC SUBMITTAL 06/29/16

RIVERPLACE
(Water Street Parking Deck Redevelopment)
Block 190, City of Wilmington
Wilmington Township
New Hanover County, NC 28412

date: 06-29-16
job no. MCE 0205-0001

© 2016 DMA Architecture PLLC

NORTH CAROLINA PROFESSIONAL ENGINEER SEAL 022574 RICHARD C. MILLER 06/29/2016

SITE INVENTORY & TREE INVENTORY

CX-101

N:\0205\0500\0195-Drawings\CX101_02705001.dwg, 6/29/2016 11:55:16 AM, CNunley, 1:1

	Property Owner Name (Owner Card)	Property Owner Name (Interpreted)	Mailing Address	Parcel ID #	Property Street Address	Class
1	USA COAST GUARD	USA COAST GUARD	0 FEDERAL BLDG *** WILMINGTON, NC 28401	R04720-001-003-000	201 WATER ST N	GOV
2	CAPITOL HOTEL ASSOC LTD PTNRP	CAPITOL HOTEL ASSOC LTD PTNRP	410 FRANCIS ST W WILLIAMSBURG, VA 23185	R04720-001-004-000	301 WATER ST N	COM
3	WILMINGTON CITY OF	CITY OF WILMINGTON	PO BOX 1810 WILMINGTON, NC 28402	R04720-001-004-001	201 WATER ST N	GOV
4	BULLOCK LLC	BULLOCK LLC	321 FRONT ST N WILMINGTON, NC 28401	R04720-002-001-000	301 FRONT ST N	COM
5	BULLOCK LLC	BULLOCK LLC	321 FRONT ST N WILMINGTON, NC 28402	R04720-002-002-000	301 FRONT ST N	COM
6	BULLOCK LLC	BULLOCK LLC	321 FRONT ST N WILMINGTON, NC 28402	R04720-003-005-000	302 FRONT ST N	COM
7	MOFRO LLC	MOFRO LLC	6510 CHAPEL HILL RD SUITE 200 RALEIGH, NC 27607	R04720-007-010-000	155 N FRONT ST	COM
8	WILMINGTON DEVELOPMENT PARTNERS LLC	WILMINGTON DEVELOPMENT PARTNERS LLC	4717 MAPLE AVE WILMINGTON, NC 28403	R04720-007-011-000	201 FRONT ST N	COM
9	WILMINGTON CITY OF	CITY OF WILMINGTON	PO BOX 1810 WILMINGTON, NC 28402	R04720-007-013-000	209 FRONT ST N	GOV
10	FRONT STREET DEV CORP	FRONT STREET DEV CORP	243 FRONT ST N WILMINGTON, NC 28401	R04720-007-014-000	243 FRONT ST N	COM
11	ROHLER JENNIFER LYNN	JENNIFER LYNN ROHLER	1317 PRINCESS ST WILMINGTON, NC 28401	R04720-007-015-000	249 FRONT ST N	COM
12	SOBOL ARNOLD L	ARNOLD SOBOL	2020 CHURCHILL DR S WILMINGTON, NC 28403	R04720-007-016-000	251 FRONT ST N	COM
13	NORTH FRONT LLC	NORTH FRONT LLC	720 3RD ST N SUITE 300 WILMINGTON, NC 28401	R04720-007-017-000	255 FRONT ST N	COM
14	HARDISON GERALD D PATRICIA G	GERALD D & PATRICIA G HARDISON	106 PARMELE BLV WRIGHTSVILLE B., NC 28480	R04720-007-018-000	261 FRONT ST N	COM
15	FRONT STREET OPTOMETRIC PA	FRONT STREET OPTOMETRIC PA	273 FRONT ST N WILMINGTON, NC 28401	R04720-007-019-000	271 FRONT ST N	COM
16	CHAMPION JOSEPHINE D	JOSEPHINE D CHAMPION	3101 DURALEIGH RD APARTMENT 352 RALEIGH, NC 27612	R04720-007-020-000	277 FRONT ST N	COM
17	WATER STREET CENTER COA INC	WATER STREET CENTER COA INC	1601 COLLEGE RD S WILMINGTON, NC 28403	R04720-007-023-000	106 WATER ST N	HOA
18	SCC HOLDINGS LLC	SCC HOLDINGS LLC	702 GLENWOOD AVE RALEIGH, NC 27605	R04720-007-023-001	106 WATER ST N	COM
19	BOOTH FAMILY HOLDINGS LLC ETAL	BOOTH FAMILY HOLDINGS LLC ETAL	108 SEAPATH ESTATES DR WRIGHTSVILLE B., NC 28480	R04720-007-023-002	106 WATER ST N	COM
20	POTTER JACKIE W LOIS J	JACKIE W & LOIS J POTTER	848 BLIND BRUSH RD MAGNOLIA, NC 28453	R04720-007-023-003	106 WATER ST N	COM
21	WATER STREET CENTER ASSN INC	WATER STREET CENTER ASSN INC	1601 COLLEGE RD S WILMINGTON, NC 28403	R04720-007-023-004	106 WATER ST N	COM
22	SWINSON ASHLEY ETAL	ASHLEY SWINSON ETAL	123 RAMGATE RD CASTLE HAYNE, NC 28429	R04720-007-023-005	106 WATER ST N	COM
23	HOLLAND HAMAN W LYNDA DIANE	HAMAN W & LYNDA DIANE HOLLAND	106 WATER TER N SUITE 106 WILMINGTON, NC 28401	R04720-007-023-006	106 WATER ST N	COM
24	HOOKS BETTY SHEARIN	BETTY SHEARIN HOOKS	PO BOX 7712 WILMINGTON, NC 28406	R04720-007-023-007	106 WATER ST N	COM
25	S&S MANAGEMENT INC	S&S MANAGEMENT INC	PO BOX 12030 WILMINGTON, NC 28405	R04720-007-023-008	106 WATER ST N	COM
26	BEAN CHAD S	CHAD S BEAN	1706 OAKLEY RD CASTLE HAYNE, NC 28429	R04720-007-023-009	106 WATER ST N	COM
27	KBF REAL ESTATE HOLDING CO I LLC	KBF REAL ESTATE HOLDING CO I LLC	PO BOX 1558 WILMINGTON, NC 28402	R04720-007-023-010	106 WATER ST N	COM
28	RIVER BANK PARTNERS LLC	RIVER BANK PARTNERS LLC	106 WATER ST N 112 WILMINGTON, NC 28401	R04720-007-023-011	106 WATER ST N	COM
29	RIVER BANK PARTNERS LLC	RIVER BANK PARTNERS LLC	106 WATER ST N 112 WILMINGTON, NC 28401	R04720-007-023-012	106 WATER ST N	COM
30	STEWART ROBERT G JOYCE W	ROBERT G & JOYCE W STEWART	8417 SARAZEN PL FUQUAY VARINA, NC 27526	R04720-007-023-013	106 WATER ST N	RES
31	CHAPPELL STEPHEN A	STEPHEN A CHAPPEL	106 WATER ST N 202 WILMINGTON, NC 28401	R04720-007-023-014	106 WATER ST N	RES
32	JOHNSON HORACE JR FRANKIE J	HORACE & FRANKIE J JOHNSON	106 WATER ST 2C WILMINGTON, NC 28402	R04720-007-023-015	106 WATER ST N	RES
33	JOHNSON HORACE JR FRANKIE I J	HORACE & FRANKIE JOHNSON	1536 KELLY RD APEX, NC 27502	R04720-007-023-016	106 WATER ST N	RES
34	GITT KENNETH D SUSAN E	KENNETH D & SUSAN E GITT	193 OLD GREENHILL RD MOUNT AIRY, NC 27030	R04720-007-023-017	106 WATER ST N	RES
35	GITT KENNETH D SUSAN E	KENNETH D & SUSAN E GITT	193 OLD GREENHILL RD MOUNT AIRY, NC 27030	R04720-007-023-018	106 WATER ST N	RES
36	KING SCOTT M	SCOTT M KING	13016 EASTFIELD RD SUITE 121 HUNTERSVILLE, NC 28078	R04720-007-023-019	106 WATER ST N	RES
37	BREEN N FULTON PENNY L	N FULTON & PENNY L BREEN	105 TROPEZ LN CARY, NC 27511	R04720-007-023-020	106 WATER ST N	RES
38	MORGAN GEORGIA L REV LIV TRUST	GEORGIA L MORGAN LIV TRUST	1101 LAKE PARK BLVD S UNIT C-1 CAROLINA BEACH, NC 28428	R04720-007-023-021	106 WATER ST N	RES
39	JANICKI ADELE EDWARD HRS	ADELE & EDWARD JANICK HRS	7235 DARDEN RD WILMINGTON, NC 28411	R04720-007-023-022	106 WATER ST N	RES
40	EPLEY KELLY	KELLY EPLEY	1016 CORDGRASS LN LELAND, NC 28451	R04720-007-023-023	106 WATER ST N	RES
41	BAZEMORE MICHAEL L ANGELA S	MICHAEL L & ANGELA S BAZEMORE	2117 ROLLING ROCK RD WAKE FOREST, NC 27587	R04720-007-023-024	106 WATER ST N	RES
42	BYRD RICHARD T PATRICIA H	RICHARD T & PATRICIA H BYRD	122 CLEMENTREE LN KURE BEACH, NC 28449	R04720-007-023-025	106 WATER ST N	RES
43	D BYRD PROPERTIES LLC	D BYRD PROPERTIES LLC	1606 CROWS LANDING CIR WILMINGTON, NC 28403	R04720-007-023-026	106 WATER ST N	RES
44	OSWALT PATRICIA B	PATRICIA B OSWALT	7212 ORCHARD TRACE WILMINGTON, NC 28409	R04720-007-023-027	106 WATER ST N	RES
45	3B PRODUCTIONS LLC	3B PRODUCTIONS LLC	20 CHICORA CLUB DR DUNN, NC 28334	R04720-007-023-028	106 WATER ST N	RES
46	MOTSINGER KEVIN B PERRY C	KEVIN B & PERRY C MOTSINGER	1955 RIVERBEND DR BURGAW, NC 28425	R04720-007-023-029	106 WATER ST N	RES
47	NORTH CAROLINA PROPERTIES I LLC	NORTH CAROLINA PROPERTIES I LLC	195 PINE LN WHITEVILLE, NC 28472	R04720-007-023-030	106 WATER ST N	RES
48	JOHNSON WALTER LOUIS	WALTER LOUIS JOHNSON	PO BOX 809 SMITHFIELD, NC 27577	R04720-007-023-031	106 WATER ST N	RES
49	MANACSA GILBERT C	GILBERT C MANACSA	207 LEWIS DR CAROLINA BEACH, NC 28428	R04720-007-023-032	106 WATER ST N	RES
50	KOLB BOBBY ELAINE	BOBBY & ELAINE KOLB	144 DRIFTWOOD CT WRIGHTSVILLE BEACH, NC 28480	R04720-007-023-033	106 WATER ST N	RES
51	REXROAD STEVAN A TERRI L	STEVAN A & TERRI L REXROAD	4404 TOLLINGTON DR WILMINGTON, NC 28412	R04720-007-023-034	106 WATER ST N	RES
52	BOULAY STEVEN C CATHERINE J	STEVEN C & CATHERINE J BOULAY	6 REDLAND ST SHREWSBURY, MA 01545	R04720-007-023-035	106 WATER ST N	RES
53	T BYRD PROPERTIES LLC	T BYRD PROPERTIES LLC	1606 CROWS LANDING CIR WILMINGTON, NC 28403	R04720-007-023-036	106 WATER ST N	RES
54	SCHWESER REAL ESTATE HOLDINGS LLC	SCHWESER REAL ESTATE HOLDINGS LLC	1 ACORN CT IOWA CITY, IA 52246	R04720-007-023-037	106 WATER ST N	RES
55	STEENECK REGINA A REVOCABLE TRUST	REGINA A STEENECK REVOCABLE TRUST	2840 MARSH POINT LN SOUTHPORT, NC 28461	R04720-007-023-038	106 WATER ST N	RES
56	HERNANDEZ ANTONIO	ANTONIO HERNADEZ	PO BOX 58270 FAYETTEVILLE, NC 28305	R04720-007-023-039	106 WATER ST N	RES
57	MCKEE JOHN S KELLY H	JOHN S & KELLY H MCKEE	206 OLD HICKORY RD LOCUST, NC 28097	R04720-007-023-040	106 WATER ST N	RES
58	SCHWESER REAL ESTATE HOLDING LLC	SCHWESER REAL ESTATE HOLDING LLC	1 ACORN ST IOWA CITY, IA 52246	R04720-007-023-041	106 WATER ST N	RES
59	BARBARINO ROBERT	ROBERT BARBARINO	8225 LOUISE AVE NORTHRIDGE, CA 91325	R04720-007-023-042	106 WATER ST N	RES
60	MILTON MARSHALL JANELLE RHYNE	MARSHAL & JANELLE RHYNE MILTON	PO BOX 2975 KAYENTA, AZ 86033	R04720-007-023-043	106 WATER ST N	RES
61	MATTERY JAMES P	JAMES P MATTERY	106 WATER ST N SUITE 408 WILMINGTON, NC 28401	R04720-007-023-044	106 WATER ST N	RES
62	YELTON WILLIAM WYMAN REBECCA B	WILLIAN WYMAN & REBECCA B YELTON	303 HOLLYBROOK DR BERMUDA RUN, NC 27006	R04720-007-023-045	106 WATER ST N	RES
63	JOHNSON JOHN VAN	JOHN VAN JOHNSON	2906 MARKET ST SUITE 204 WILMINGTON, NC 28403	R04720-007-023-046	106 WATER ST N	RES
64	BAKER TIMOTHY G CHERYL A	TIMOTHY G & CHERYL A BAKER	2356 CLARKS LANDING RD ROCKY POINT, NC 28457	R04720-007-023-047	106 WATER ST N	RES

	Property Owner Name (Owner Card)	Property Owner Name (Interpreted)	Mailing Address	Parcel ID #	Property Street Address	Class
65	LISEWSKI E EJR G M REV LIV TR	EUGENE LISEWSKI & GAIL MORRIS-LISEWSKI	7,403 PRIVET CT WILMINGTON, NC 28411	R04720-007-023-048	106 WATER ST N	RES
66	SCHWESER REAL ESTATE HOLDINGS LLC	SCHWESER REAL ESTATE HOLDINGS LLC	1 ACORN CT IOWA CITY, IA 52246	R04720-007-023-049	106 WATER ST N	RES
67	SCHWESER REAL ESTATE HOLDINGS LLC	SCHWESER REAL ESTATE HOLDINGS LLC	1 ACORN CT IOWA CITY, IA 52246	R04720-007-023-050	106 WATER ST N	RES
68	AMOS GINGER S	GINGER S AMOS	106 WATER ST N SUITE 503 WILMINGTON, NC 28401	R04720-007-023-051	106 WATER ST N	RES
69	ENGLISH ARTHUR B JUDY K TRUST	ARTHUR B & JUDY K ENGLISH TRUST	411 WALNUT ST 2100 GREEN COVE SPRINGS, FL 32043	R04720-007-023-052	106 WATER ST N	RES
70	BROCK TIMOTHY A TERI D	TIMOTHY A & TERI D BROCK	104 LESLIE LN WILMINGTON, NC 28411	R04720-007-023-053	106 WATER ST N	RES
71	KEARNEY JAMES W BETTY J	JAMES W & BETTY J KEARNY	316 COLONY GREEN CT WILMINGTON, NC 28412	R04720-007-023-054	106 WATER ST N	RES
72	MCKOY PROPERTIES LLC	MCKOY PROPERTIES LLC	4112 CHAPRA DR WILMINGTON, NC 28412	R04720-007-023-055	106 WATER ST N	RES
73	CCRD PROPERTIES LLC	CCRD PROPERTIES LLC	2 RALEIGH ST WRIGHTSVILLE BEACH, NC 28480	R04720-007-023-056	106 WATER ST N	RES
74	MCKEOWN TERESA E	TERESA E MCKEOWN	4209 LASSITER MILL RD #473 RALEIGH, NC 27690	R04720-007-023-057	106 WATER ST N	RES
75	COASTAL DIVERSIFIED LLC	COASTAL DIVERSIFIED LLC	117 BRAXLO LN WILMINGTON, NC 28409	R04720-007-023-058	106 WATER ST N	RES
76	HUNTER GUY L MARY L	GUY L & MARY L HUNTER	125 ROCK CREEK DR JACKSONVILLE, NC 28540	R04720-007-023-059	106 WATER ST N	RES
77	BILLINGMEIER JAMES M 1999 TRUST	JAMES M BILLINGMEIER 1999 TRUST	PO BOX 483 LINDEN, CA 95236	R04720-007-023-060	106 WATER ST N	RES
78	MANESS CARI	CARI MANESS	3208 SAND MARSH LN MT PLEASANT, SC 29466	R04720-007-023-061	106 WATER ST N	RES
79	HALL PREMIERE PROPERTIES LLC	HALL PREMIERE PROPERTIES LLC	348 MARKER 55 DR HOLDEN BEACH, NC 28462	R04720-007-023-062	106 WATER ST N	RES
80	HALL PREMIERE PROPERTIES LLC	HALL PREMIERE PROPERTIES LLC	348 MARKER 55 DR HOLDEN BEACH, NC 28462	R04720-007-023-063	106 WATER ST N	RES
81	T&T DIX PROPERTIES LLC	T&T DIX PROPERTIES LLC	4917 PIEDMONT PKWY SUITE 104 JAMESTOWN, NC 27282	R04720-007-023-064	106 WATER ST N	RES
82	MCKOY PROPERTIES LLC	MCKOY PROPERTIES LLC	4112 CHAPRA DR WILMINGTON, NC 28412	R04720-007-023-065	106 WATER ST N	RES
83	PERSIANI PHILIP J CARLA MARIE	PHILIP J & CARLA MARIE PERSIANI	114 LINDSEY DR JACKSONVILLE, NC 28540	R04720-007-023-066	106 WATER ST N	RES
84	DOUGHERTY JOHN O KAREN A	JOHN O & KAREN A DOUGHERTY	1207 DALTON WAY LELAND, NC 28451	R04720-007-023-067	106 WATER ST N	RES
85	STEWART ROBERT JOYCE	ROBERT & JOYCE STEWART	8417 SARAZEN PL FUQUAY VARINA, NC 27526	R04720-007-023-068	106 WATER ST N	RES
86	ARMSTRONG THOMAS C	THOMAS C ARMSTRONG	206 BELLAMY PARKE WAY WILMINGTON, NC 28412	R04720-007-023-069	106 WATER ST N	RES
87	HOGE JAMES T DRUSILLA S	JAMES T & DRUSILLA S HOGE	225 LEES CUT WRIGHTSVILLE BEACH, NC 28480	R04720-007-023-070	106 WATER ST N	RES
88	BLAND CHESTER W ANNIE R	CHESTER W & ANNIE R BLAND	1007 ANDERSON ST NW WILSON, NC 27893	R04720-007-023-071	106 WATER ST N	RES
89	LUNGER WILLIAM P MARY P	WILLIAM P & MARY P LUNGER	4629 32ND RD ARLINGTON, VA 22207	R04720-007-023-072	106 WATER ST N	RES
90	SCORZA FABIEN A CORRIE J LEFEBRRE	FABIEN A SCORZA & CORRIE J LEFEBRRE	106 WATER ST N SUITE 701 WILMINGTON, NC 28401	R04720-007-023-073	106 WATER ST N	RES
91	LFM BUILDING INVESTMENTS LLC	LFM BUILDING INVESTMENTS LLC	609 PINER RD SUITE 122 WILMINGTON, NC 28409	R04720-007-023-074	106 WATER ST N	RES
92	DROUIN KATHLEEN D	KATHLEEN D DROUIN	220 ZAPATA HWY N SUITE 11 LAREDO, TX 78043	R04720-007-023-075	106 WATER ST N	RES
93	COSTELLO JENNIFER C	JENNIFER C COSTELLO	2717 VAN DYKE AVE RALEIGH, NC 27607	R04720-007-023-076	106 WATER ST N	RES
94	MCKOY BOBBY S MARILYN W	BOBBY S & MARILYN W MCKOY	4112 CHAPRA DR WILMINGTON, NC 28412	R04720-007-023-077	106 WATER ST N	RES
95	WARD KENNETH C BARBARA B	KENNETH C & BARBARA B WARD	709 FREEMASONS DR GREENSBORO, NC 27407	R04720-007-023-078	106 WATER ST N	RES
96	HAUSE DIANE ETAL	DIANE HAUSE ETAL	15930 NC HIGHWAY 210 IVANHOE, NC 28447	R04720-007-023-079	106 WATER ST N	RES
97	SHETH LIVING TRUST	SHETH LIVING TRUST	735 LYNCHBURG DR JACKSONVILLE, NC 28546	R04720-007-023-080	106 WATER ST N	RES
98	SIKORSKI KEVIN	KEVIN SIKORSKI	9118 RIVER RD WILMINGTON, NC 28412	R04720-007-023-081	106 WATER ST N	RES
99	JONES JOHN T CAROLYN A TRUST	JOHN T & CAROLYN A JONES TRUST	1773 SHALLOTTE INLET DR SW SHALLOTTE, NC 28470	R04720-007-023-082	106 WATER ST N	RES
100	MCWATERS ROBERT	ROBERT MCWATERS	1319 MILITARY CUTOFF RD #219 WILMINGTON, NC 28405	R04720-007-023-083	106 WATER ST N	RES
101	JOHNSON MARIE B ETAL	MARIE B JOHNSON ETAL	5518 CAPTAINS LN WILMINGTON, NC 28409	R04720-007-023-084	106 WATER ST N	RES
102	CJT PROPERTIES LLC	CJT PROPERTIES LLC	6 ROYAL CT READING, PA 19607	R04720-007-023-085	106 WATER ST N	RES
103	WEBB KATHERINE FORSYTH WOLF	KATHERINE FORSYTH WOLF WEBB	412 14TH ST N WILMINGTON, NC 28401	R04720-007-023-086	106 WATER ST N	RES
104	W B WARREN CORP	W B WARREN CORP	1944 HAWTHORNE RD WILMINGTON, NC 28403	R04720-007-023-087	106 WATER ST N	RES
105	ANDERSON LEONARD G BARBARA L	LEONARD G & BARBARA L ANDERSON	2131 GLOUCESTER PL WILMINGTON, NC 28403	R04720-007-023-088	106 WATER ST N	RES
106	TLALKA IRENA	IRENA TLALKA	106 WATER ST N SUITE 805 WILMINGTON, NC 28401	R04720-007-023-089	106 WATER ST N	RES
107	DAKOULIS DENISE	DENISE DAKOULIS	PO BOX 2052 WILMINGTON, NC 28402	R04720-007-023-090	106 WATER ST N	RES
108	WATERMAN NICHOLSON FAMILY TRUST	NICHOLSON WATERMAN FAMILY TRUST	PO BOX 382 EL SEGUNDO, CA 90245	R04720-007-023-091	106 WATER ST N	RES
109	ARORA & PERSAUD INVESTMENTS LLC	ARORA & PERSAUD INVESTMENTS LLC	6300 SHINN CREEK DR WILMINGTON, NC 28405	R04720-007-023-092	106 WATER ST N	RES
110	MCNEIR GEORGE III HILLARY	GEORGE & HILLARY MCNEIR	106 WATER ST UNIT 810 WILMINGTON, NC 28401	R04720-007-023-093	106 WATER ST N	RES
111	MCNEIR GEORGE III HILLARY	GEORGE & HILLARY MCNEIR	106 WATER ST N SUITE 810 WILMINGTON, NC 28401	R04720-007-023-094	106 WATER ST N	RES
112	KING SCOTT M	SCOTT M KING	13016 EASTFIELD RD SUITE 121 HUNTERSVILLE, NC 28078	R04720-007-023-095	106 WATER ST N	RES
113	BHAT RAJA G VIDYA	RAJA G & VIDYA BHAT	265 MARSH HEN DR WILMINGTON, NC 28409	R04720-007-023-096	106 WATER ST N	RES
114	DURANT MATTHEW	MATHEW DURANT	PO BOX 877 CLAYTON, NC 27528	R04720-007-023-097	106 WATER ST N	RES
115	SCHWESER REAL ESTATE HOLDINGS LLC	SCHWESER REAL ESTATE HOLDINGS LLC	1 ACORN CT IOWA CITY, IA 52246	R04720-007-023-098	106 WATER ST N	RES
116	ROYAL ROGER ETAL	ROGER ROYAL ETAL	PO BOX 1365 WILMINGTON, NC 28402	R04720-007-023-099	106 WATER ST N	RES
117	ATKINS JAMES N SHERRY H	JAMES N & SHERRY H ATKINS	106 VERANDA PL GOLDSBORO, NC 27530	R04720-007-023-100	106 WATER ST N	RES
118	DAVIS JOSEPH D III	JOSEPH D DAVIS III	PO BOX 1123 MARION, NC 28752	R04720-007-023-101	106 WATER ST N	RES
119	AMOS LORRI ETAL	LORRI AMOS ETAL	PO BOX 111 SANDY RIDGE, NC 27046	R04720-007-023-102	106 WATER ST N	RES
120	DAVIDSON RICHARD S VANESSA JENIK	RICHARD S & VANESSA JENIK DAVIDSON	308 WHISPER PARK DR WILMINGTON, NC 28411	R04720-007-023-103	106 WATER ST N	RES
121	WOOTEN SANDRA G	SANDRA G WOOTEN	3325 BEACH DR W OAK ISLAND, NC 28465	R04720-007-023-104	106 WATER ST N	RES
122	ROWLAND LAWRENCE LYNDA H FAM TR	LAWRENCE & LYNDA H ROWLAND FAM TR	16836 BERMEJO ST CANYON COUNTRY, CA 91351	R04720-007-023-105	106 WATER ST N	RES
123	BAHNER RICHARD S MARNIE A	RICHARD S & MARNIE A BAHNER	5107 NICHOLAS CREEK CIR WILMINGTON, NC 28409	R04720-007-023-106	106 WATER ST N	RES
124	FAULKNER CARY J JANIE G	CARY J & JANIE G FAULKNER	5109 YACHTSMAN CT RALEIGH, NC 27615	R04720-007-023-107	106 WATER ST N	RES
125	HAWKINS YATES D DEBORAH P REV LIV	YATES D & DEBORAH P HAWKINS	1855 NEWKIRK RD WILMINGTON, NC 28409	R04720-007-023-108	106 WATER ST N	RES
126	WATER ST CNTR PKING CONDO COA	WATER ST CENTER PARKING CONDO COA	1601 COLLEGE RD S WILMINGTON, NC 28403	R04720-007-024-000	100 CHESTNUT ST	HOA
127	MSC WILMINGTON LLC	MSC WILMINGTON LLC	1 CAUSEWAY DR OCEAN ISLE BEACH, NC 28469	R04720-007-028-000	200 WATER ST N	COM

2 ADJACENT PROPERTY OWNER INFORMATION

Scale: 1"=20'-0"

1 NOTES

1. ALL ADJACENT PARCELS ARE ZONED CBD.

DMA Architecture PLLC

380-H Knollwood Street, Suite 174
Winston-Salem, NC 27103
phone: 336-723-6360
dishnermoore.com

MCKIM&CREED
243 North Front Street
Wilmington, North Carolina 28401
Phone: (910)343-1048 . Fax: (910)251-8282
www.mckimcreed.com

revisions:
A - CITY OF WILMINGTON TRC SUBMITTAL 06/29/16

RIVERPLACE
(Water Street Parking Deck Redevelopment)
Block 190, City of Wilmington
Wilmington Township
New Hanover County, NC 28412

date: 06-29-16
job no. MCE 0205-0001

© 2016 DMA Architecture PLLC

ADJACENT PROPERTY OWNERS

CX-102

S:\0205\0001\00\Drawings\CX102_02050001.dwg, 6/29/2016 11:55:36 AM, CHarvey, 11

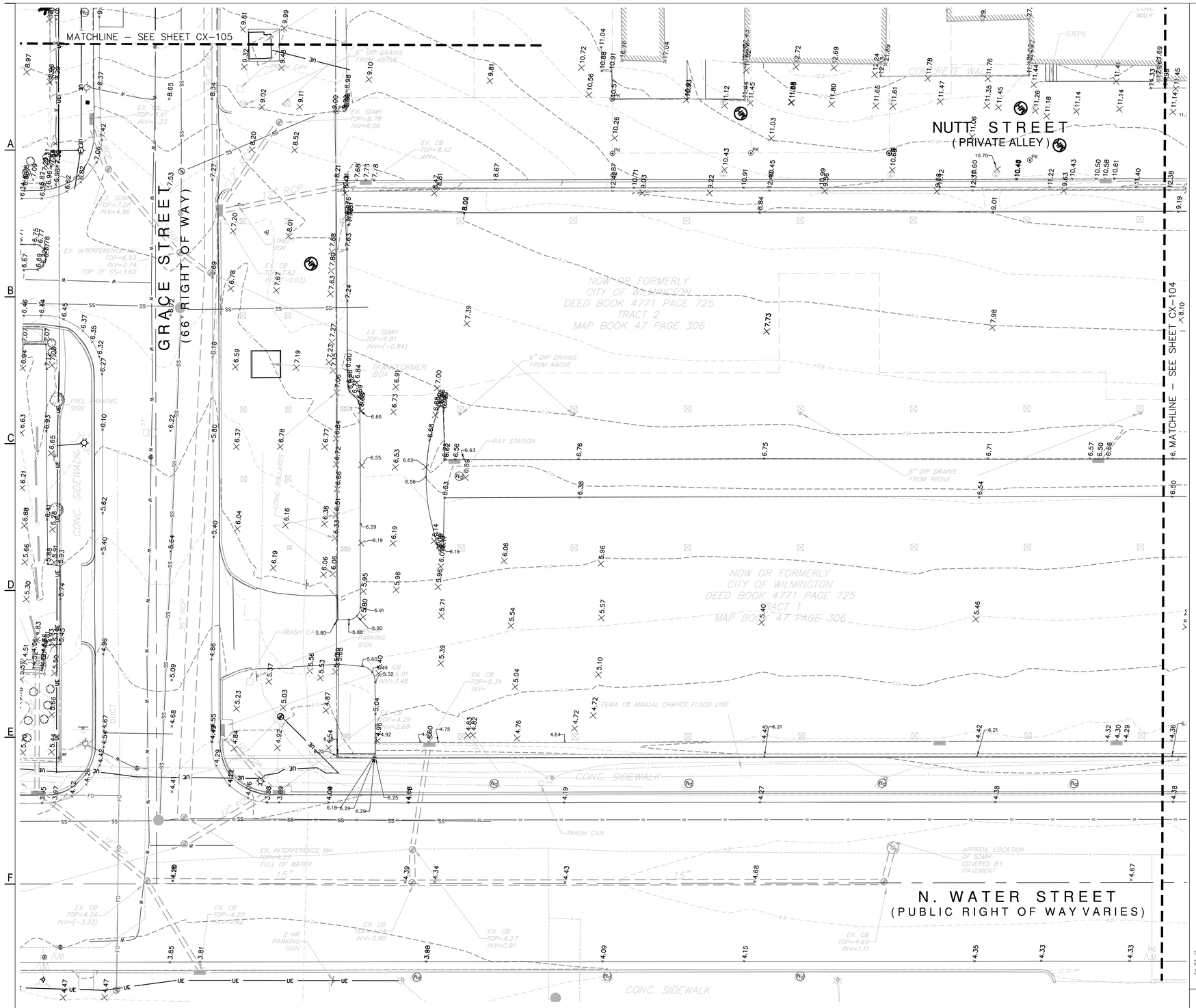

1. PARKING DECK SURVEY FROM CITY OF WILMINGTON. DATE – 09/16/2014
2. WATER STREET SURVEY FROM WK DIXON. DATE – 07/06/2015
3. ALL PARCEL INFORMATION FROM NEW HANOVER COUNTY GIS (maps.nhcgov.com). DATE – 03/9/2016.

2 NOTES – TYPICAL FOR ALL EXISTING CONDITIONS SHEETS

STORMWATER MANAGEMENT PLAN
APPROVED
CITY OF WILMINGTON
ENGINEERING DEPARTMENT
DATE _____ PERMIT #_____
SIGNED_____

Approved Construction Plan

	Name	Date
Planning		
Traffic		
Fire		

For each open utility cut of City streets, a $325 permit shall be required from the City prior to occupancy and/or project acceptance.

4 LOWER LEVEL EXISTING CONDITIONS – NORTHWEST

Scale: 1"=10'–0"

1 APPROVALS

DMA Architecture PLLC

380-H Knollwood Street, Suite 174
Winston-Salem, NC 27103
phone: 336-723-6360
dishermoore.com

McKIM&CREED
243 North Front Street
Wilmington, North Carolina 28401
Phone: (910)343-1048 , Fax: (910)251-8282
www.mckimcreed.com

revisions:
A - CITY OF WILMINGTON TRC SUBMITTAL 06/29/16

RIVERPLACE
(Water Street Parking Deck Redevelopment)
Block 190, City of Wilmington
Wilmington Township
New Hanover County, NC 28412

date: 06-29-16
job no. MCE 0205-0001

© 2016 DMA Architecture PLLC

NORTH CAROLINA PROFESSIONAL SEAL 022574 ENGINEER RICHARD M. COLLIER 06/29/2016

LOWER LEVEL
EXISTING CONDITIONS
(NW)

CX-103

S:\0205\0001\00-Drawings\CX103_0205l0001.dwg, 6/29/2016 11:56:13 AM, Chunsey, 11

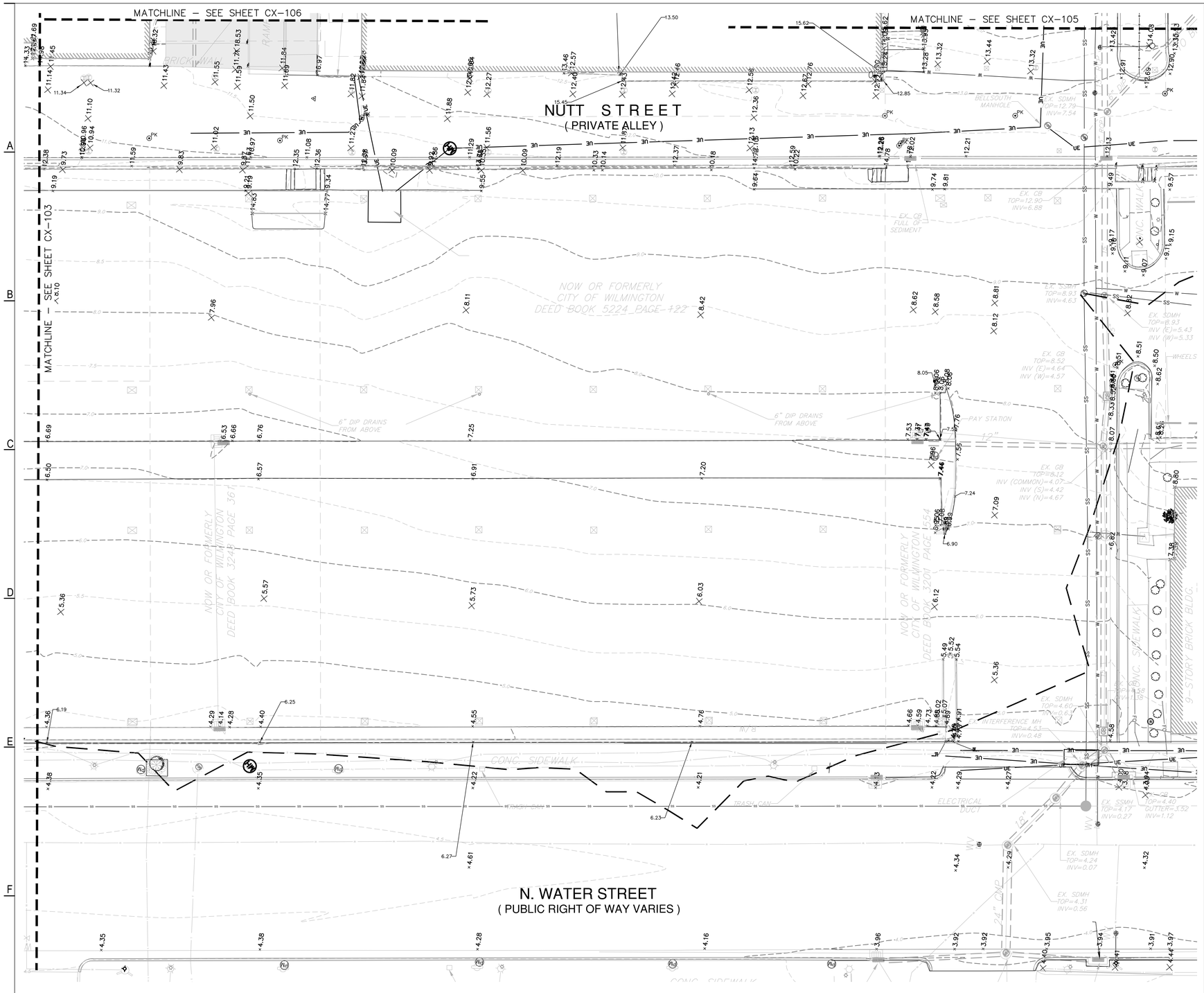

1. REFER TO NOTES ON G-001 AND CX-103.

2 NOTES

STORMWATER MANAGEMENT PLAN
APPROVED
CITY OF WILMINGTON
ENGINEERING DEPARTMENT
DATE _____ PERMIT #_____
SIGNED_____

Approved Construction Plan

	Name	Date
Planning		
Traffic		
Fire		

For each open utility cut of City streets, a $325 permit shall be required from the City prior to occupancy and/or project acceptance.

3 LOWER LEVEL EXISTING CONDITIONS - SOUTHWEST

Scale: 1"=10'-0"

1 APPROVALS

DMA Architecture PLLC

380-H Knollwood Street, Suite 174
Winston-Salem, NC 27103
phone: 336-723-6360
dishnermoore.com

McKIM&CREED
243 North Front Street
Wilmington, North Carolina 28401
Phone: (910)343-1048 , Fax: (910)251-8282
www.mckimcreed.com

revisions:
A - CITY OF WILMINGTON TRC SUBMITTAL 06/29/16

RIVERPLACE
(Water Street Parking Deck Redevelopment)
Block 190, City of Wilmington
Wilmington Township
New Hanover County, NC 28412

date: 06-29-16
job no. MCE 0205-0001

© 2016 DMA Architecture PLLC

NORTH CAROLINA PROFESSIONAL SEAL 022574 ENGINEER RICHARD M. COLLIER
06/29/2016

LOWER LEVEL EXISTING CONDTIONS (SW)

CX-104

S:\0205\0001\80-Drawings\CX103_0205\0001.dwg, 6/29/2016 11:56:21 AM, CNurney, 1:1

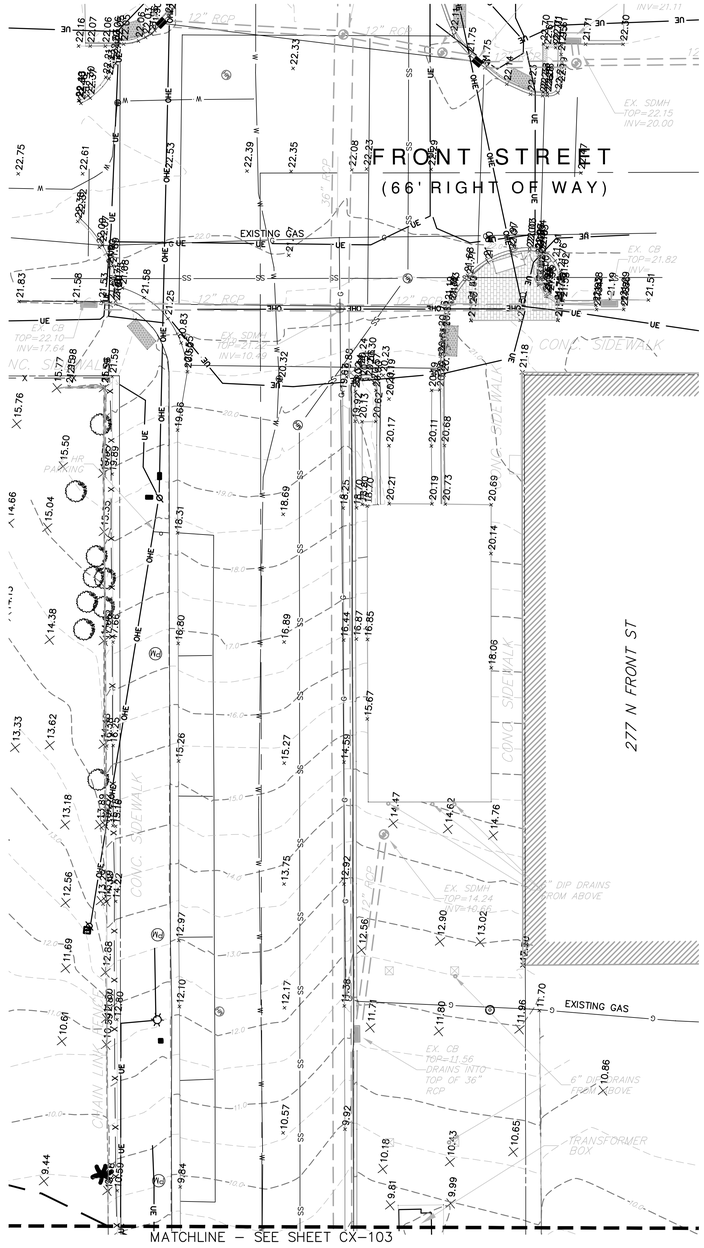

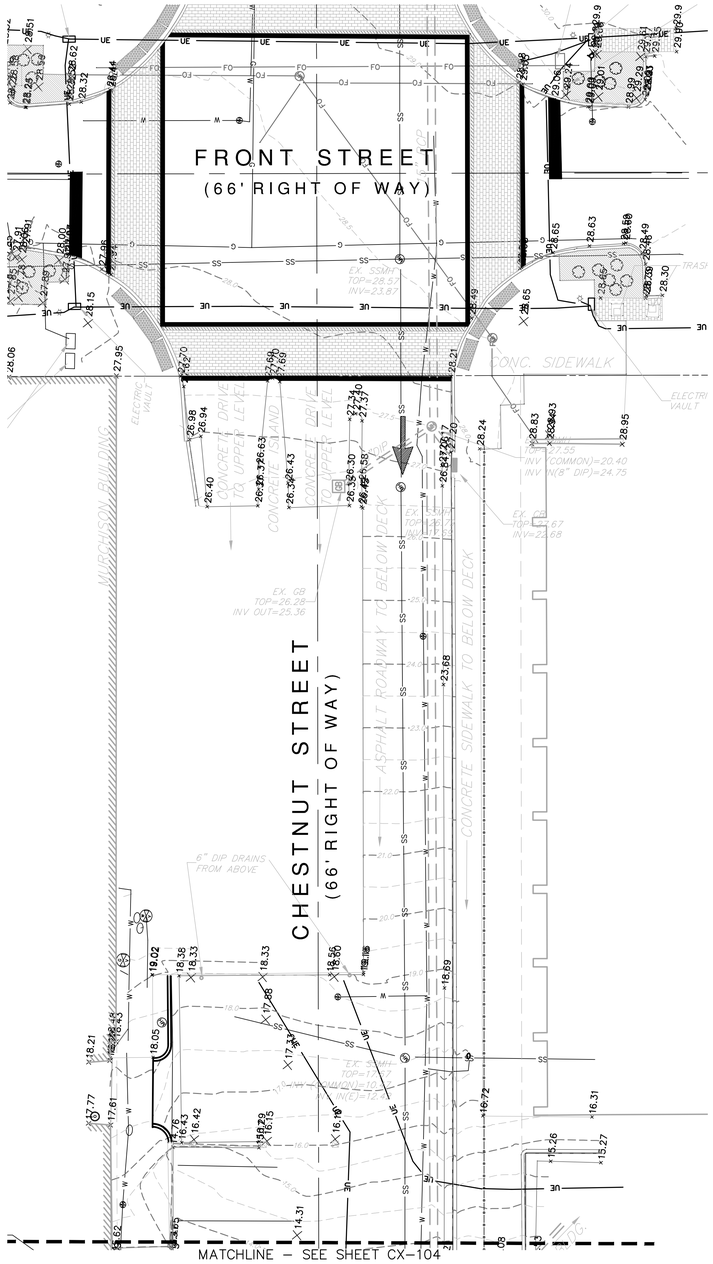

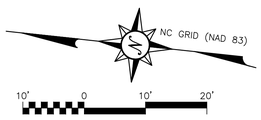

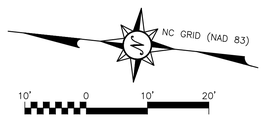

1. REFER TO NOTES ON G-001 AND CX-103.

4	LOWER LEVEL EXISTING CONDITIONS - NORTHEAST	Scale: 1"=10'-0"
3	LOWER LEVEL EXISTING CONDITIONS - SOUTHEAST	Scale: 1"=10'-0"
2	NOTES	
1	APPROVALS	

STORMWATER MANAGEMENT PLAN
APPROVED
CITY OF WILMINGTON
ENGINEERING DEPARTMENT
DATE _____ PERMIT #_____
SIGNED_____

Approved Construction Plan

Name	Date
Planning	
Traffic	
Fire	

For each open utility cut of City streets, a $325 permit shall be required from the City prior to occupancy and/or project acceptance.

DMA Architecture PLLC

380-H Knollwood Street, Suite 174
Winston-Salem, NC 27103
phone: 336-723-6360
dishnermoore.com

McKIM & CREED
243 North Front Street
Wilmington, North Carolina 28401
Phone: (910)343-1048 , Fax: (910)251-8282
www.mckimcreed.com

revisions:
A - CITY OF WILMINGTON TRC SUBMITTAL 06/29/16

RIVERPLACE
(Water Street Parking Deck Redevelopment)
Block 190, City of Wilmington
Wilmington Township
New Hanover County, NC 28412

date: 06-29-16
job no. MCE 0205-0001

© 2016 DMA Architecture PLLC

NORTH CAROLINA REGISTERED LANDSCAPE ARCHITECT SEAL 022574 RICHARD A. POLLER 06/29/2016

LOWER LEVEL
EXISTING CONDITIONS
(NE & SE)

CX-105

S:\0205\0001\00\Drawings\CX101_02050001.dwg, 6/29/2016 11:56:30 AM, CNarney, 11

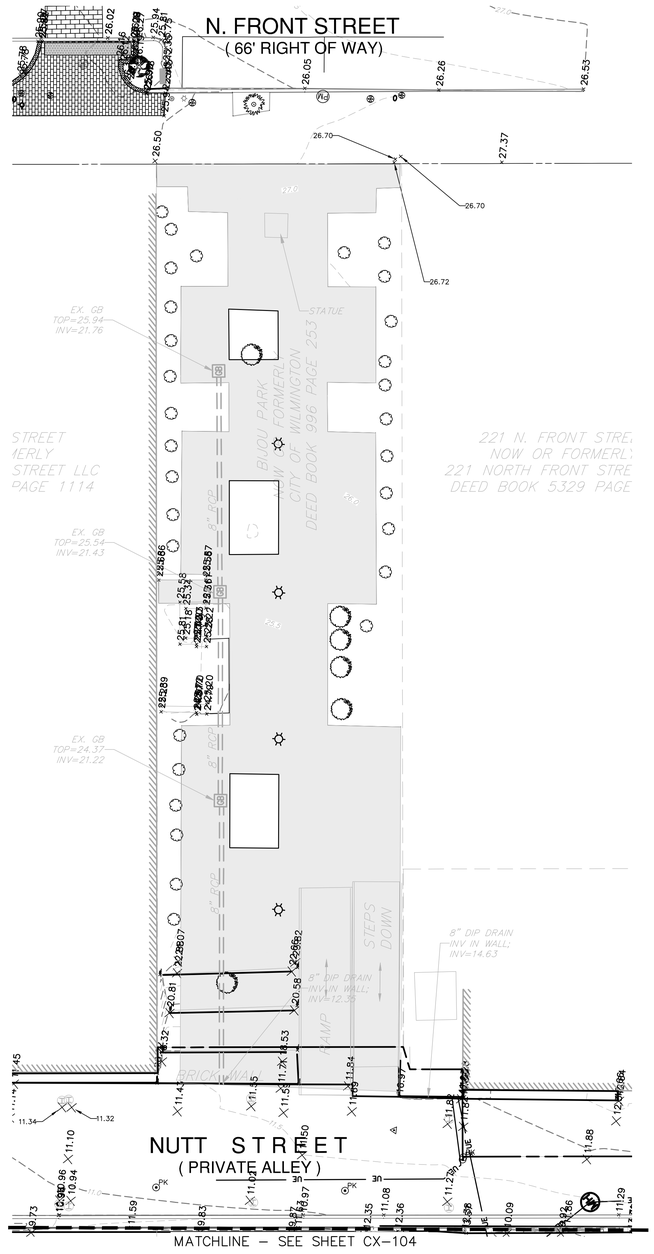

1. REFER TO NOTES ON G–001 AND CX–103.

2 NOTES

STORMWATER MANAGEMENT PLAN
APPROVED
CITY OF WILMINGTON
ENGINEERING DEPARTMENT
DATE _____ PERMIT #_____
SIGNED_____

Approved Construction Plan

	Name	Date
Planning		
Traffic		
Fire		

For each open utility cut of City streets, a $325 permit shall be required from the City prior to occupancy and/or project acceptance.

NC GRID (NAD 83)

10' 0 10' 20'

3 EXISTING CONDITIONS – BIJOU PARK

Scale: 1"=10'-0"

1 APPROVALS

DMA Architecture PLLC

380-H Knollwood Street, Suite 174
Winston-Salem, NC 27103
phone: 336-723-6360
dishmermoore.com

McKIM&CREED
243 North Front Street
Wilmington, North Carolina 28401
Phone: (910)343-1048 , Fax: (910)251-8282
www.mckimcreed.com

revisions:
A - CITY OF WILMINGTON TRC SUBMITTAL 06/29/16

RIVERPLACE
(Water Street Parking Deck Redevelopment)

Block 190, City of Wilmington
Wilmington Township
New Hanover County, NC 28412

date: 06-29-16
job no. MCE 0205-0001

© 2016 DMA Architecture PLLC

NORTH CAROLINA PROFESSIONAL ENGINEER SEAL 022574 RICHARD M. FOLLER
06/29/2016

EXISTING CONDITIONS
(BIJOU PARK)

CX-106

S:\0205\0001\00-Drawings\CX\103_02050001.dwg, 6/29/2016 11:56:40 AM, CHunsley, 11

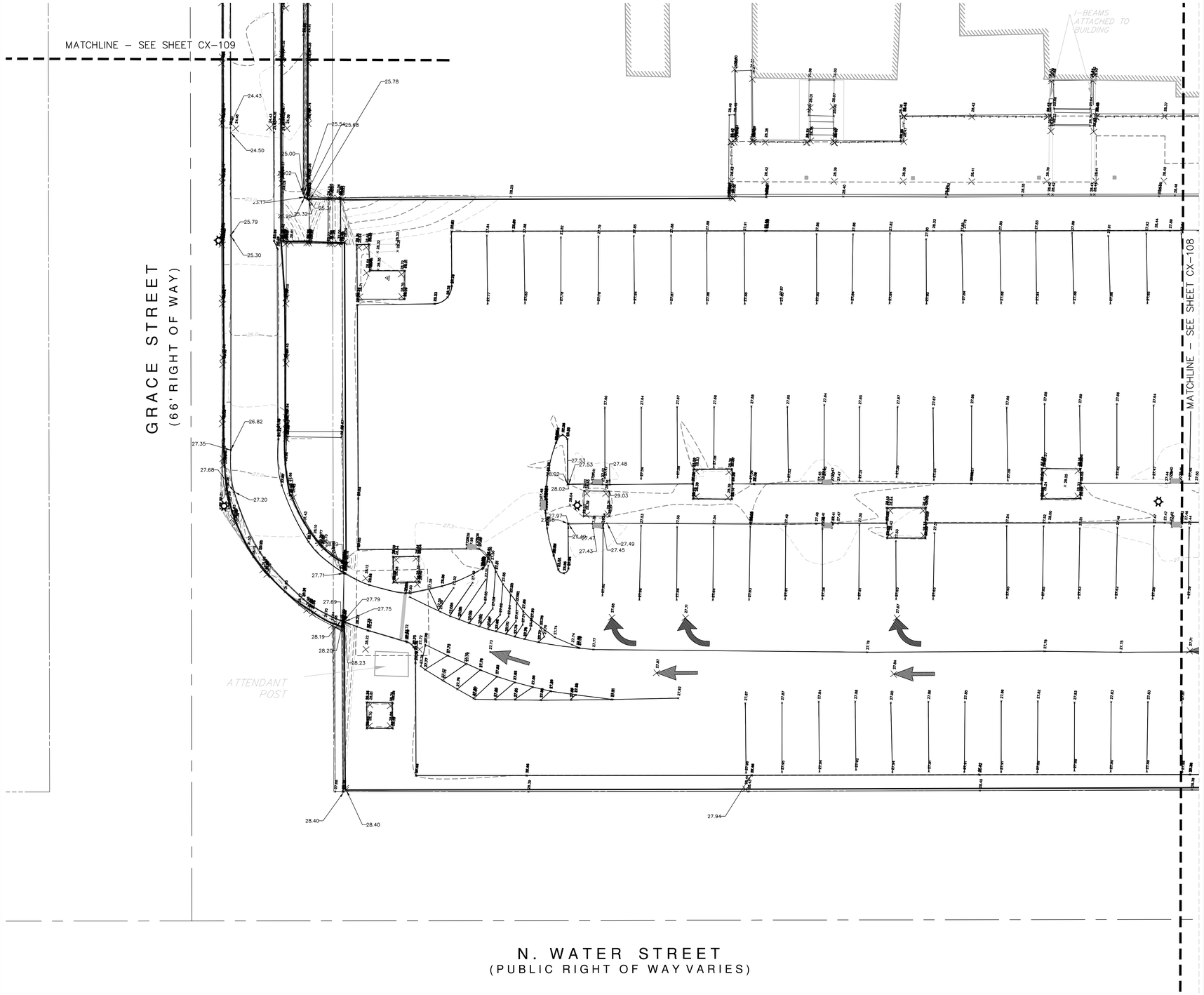

1. PARKING DECK SURVEY FROM CITY OF WILMINGTON. DATE – 09/16/2014

2 NOTES - TYPICAL FOR ALL EXISTING CONDITIONS SHEETS

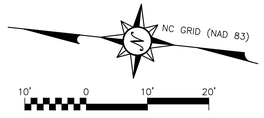

STORMWATER MANAGEMENT PLAN
APPROVED
CITY OF WILMINGTON
ENGINEERING DEPARTMENT
DATE _____ PERMIT #_____
SIGNED_____

Approved Construction Plan

	Name	Date
Planning		
Traffic		
Fire		

For each open utility cut of City streets, a $325 permit shall be required from the City prior to occupancy and/or project acceptance.

2 UPPER LEVEL EXISTING CONDITIONS - NORTHWEST

Scale: 1"=10'-0"

1 APPROVALS

DMA Architecture PLLC

380-H Knollwood Street, Suite 174
Winston-Salem, NC 27103
phone: 336-723-6360
dishnermoore.com

McKIM&CREED
243 North Front Street
Wilmington, North Carolina 28401
Phone: (910)343-1048 , Fax: (910)251-8282
www.mckimcreed.com

revisions:
A - CITY OF WILMINGTON TRC SUBMITTAL 06/29/16

RIVERPLACE
(Water Street Parking Deck Redevelopment)
Block 190, City of Wilmington
Wilmington Township
New Hanover County, NC 28412

date: 06-29-16
job no. MCE 0205-0001

© 2016 DMA Architecture PLLC

SEAL 022574 ENGINEER RICHARD M. COLLIER
06/29/2016

UPPER LEVEL
EXISTING CONDITIONS
(NW)

CX-107

S:\0205\0001\80-Drawings\CX107_0205\0001.dwg, 6/29/2016 11:57:11 AM, Chursey, 1:1

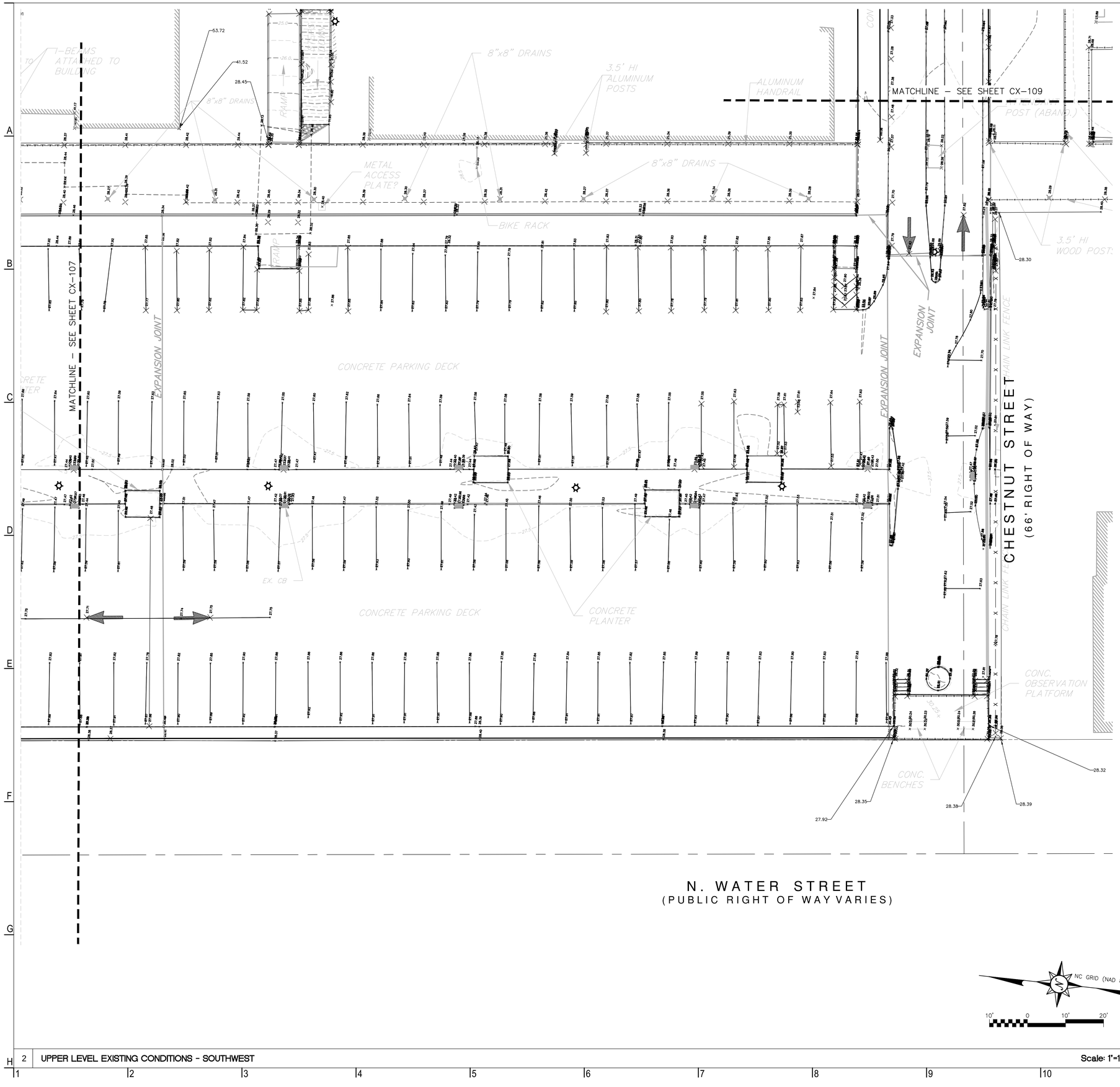

UPPER LEVEL EXISTING CONDITIONS - SOUTHWEST

Scale: 1"=10'-0"

STORMWATER MANAGEMENT PLAN
APPROVED
CITY OF WILMINGTON
ENGINEERING DEPARTMENT
DATE _____ PERMIT #_____
SIGNED _____

Approved Construction Plan

	Name	Date
Planning		
Traffic		
Fire		

For each open utility cut of City streets, a $325 permit shall be required from the City prior to occupancy and/or project acceptance.

APPROVALS

2	UPPER LEVEL EXISTING CONDITIONS - SOUTHWEST
1	APPROVALS

DMA Architecture PLLC

380-H Knollwood Street, Suite 174
Winston-Salem, NC 27103
phone: 336-723-6360
dishermoore.com

McKIM & CREED
243 North Front Street
Wilmington, North Carolina 28401
Phone: (910)343-1048 , Fax: (910)251-8282
www.mckimcreed.com

revisions:
A - CITY OF WILMINGTON TRC SUBMITTAL 06/29/16

RIVERPLACE
(Water Street Parking Deck Redevelopment)
Block 190, City of Wilmington
Wilmington Township
New Hanover County, NC 28412

date: 06-29-16
job no. MCE 0205-0001

© 2016 DMA Architecture PLLC

NORTH CAROLINA PROFESSIONAL SEAL 022574 ENGINEER RICHARD M. COLLIER
06/29/2016

UPPER LEVEL
EXISTING CONDITIONS
(SW)

CX-108

S:\0205\0001\00-Drawings\CX107_0205001.dwg, 6/29/2016 11:57:19 AM, CHunsley, 11

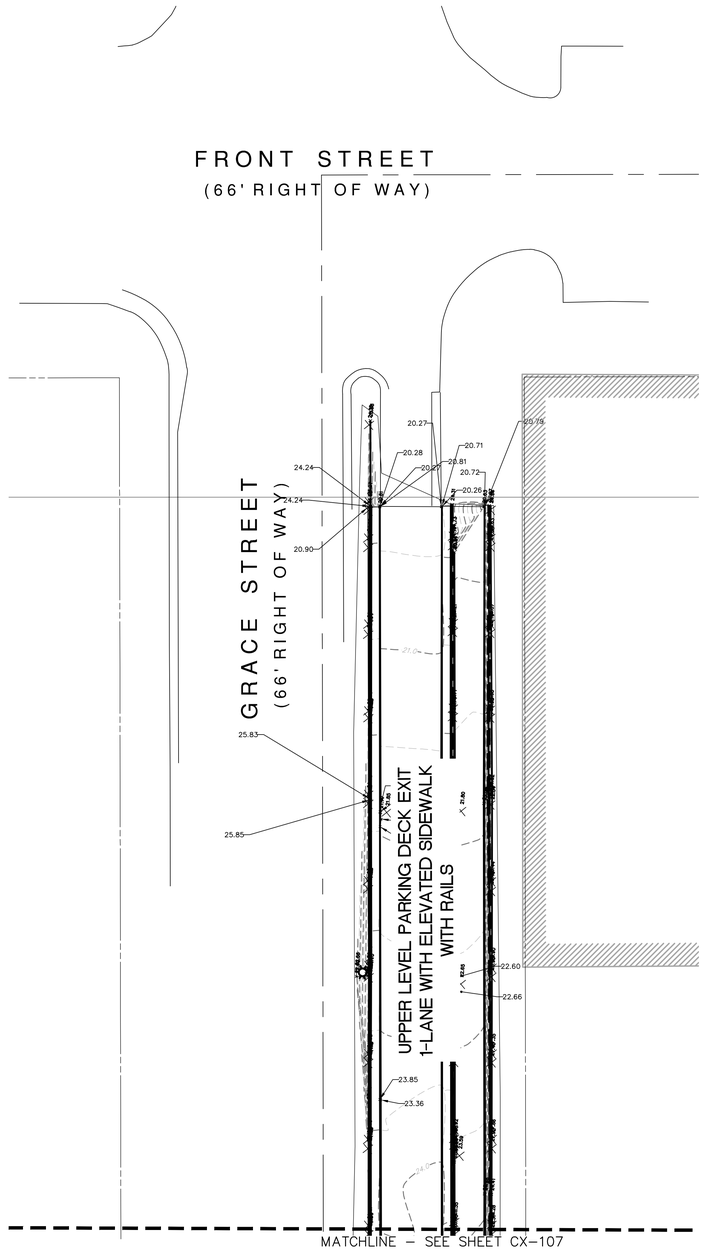

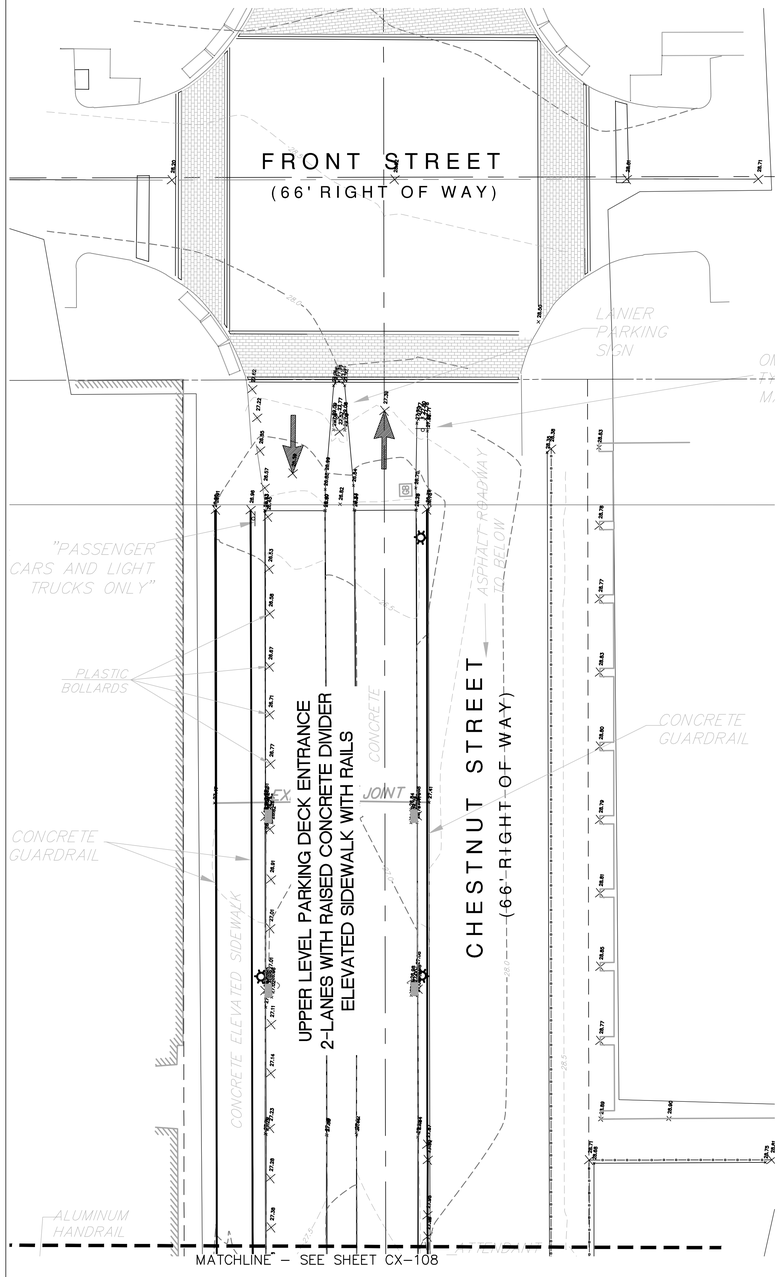

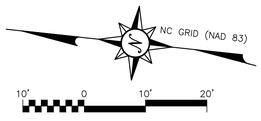

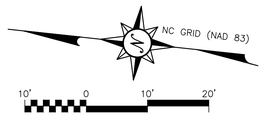

3 UPPER LEVEL EXISTING CONDITIONS - NORTHEAST Scale: 1"=10'-0"

2 UPPER LEVEL EXISTING CONDITIONS - SOUTHEAST Scale: 1"=10'-0"

1 APPROVALS

STORMWATER MANAGEMENT PLAN
APPROVED
CITY OF WILMINGTON
ENGINEERING DEPARTMENT
DATE _____ PERMIT #_____
SIGNED_____

Approved Construction Plan

	Name	Date
Planning		
Traffic		
Fire		

For each open utility cut of City streets, a $325 permit shall be required from the City prior to occupancy and/or project acceptance.

DMA Architecture PLLC

380-H Knollwood Street, Suite 174
Winston-Salem, NC 27103
phone: 336-723-6360
dishnermoore.com

McKIM&CREED
243 North Front Street
Wilmington, North Carolina 28401
Phone: (910)343-1048 , Fax: (910)251-8282
www.mckimcreed.com

revisions:
A - CITY OF WILMINGTON TRC SUBMITTAL 06/29/16

RIVERPLACE
(Water Street Parking Deck Redevelopment)

Block 190, City of Wilmington
Wilmington Township
New Hanover County, NC 28412

date: 06-29-16
job no. MCE 0205-0001

© 2016 DMA Architecture PLLC

NORTH CAROLINA PROFESSIONAL ENGINEER SEAL 022574 RICHARD N. COLLIER
06/29/2016

UPPER LEVEL
EXISTING CONDITIONS
(NE & SE)

CX-109

S:\0205\0001\05-Drawing\CX107_0205001.dwg, 6/29/2016 11:57:28 AM, CNanney, 11

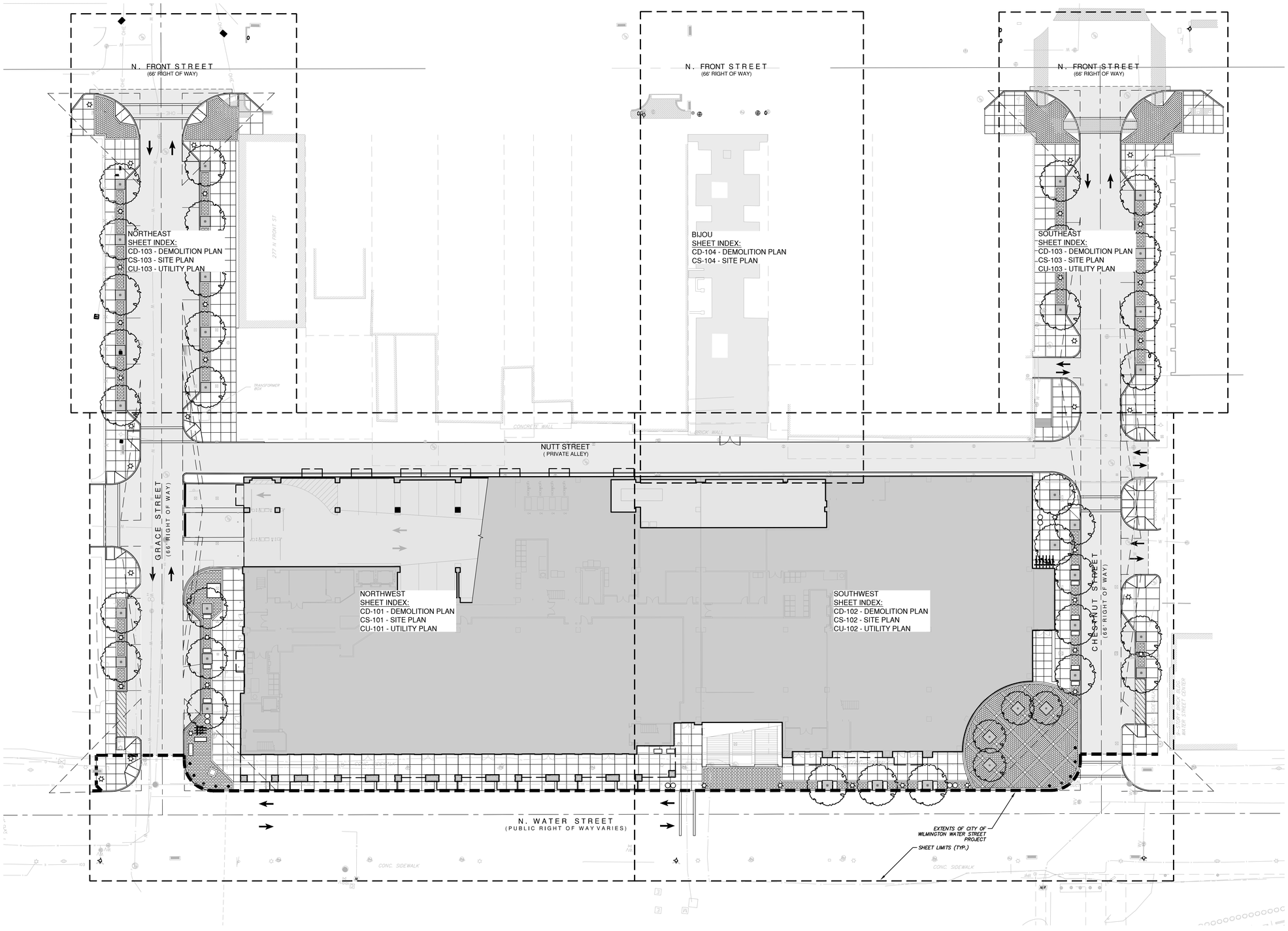

STORMWATER MANAGEMENT PLAN
APPROVED
CITY OF WILMINGTON
ENGINEERING DEPARTMENT
DATE _____ PERMIT #_____
SIGNED_____

Approved Construction Plan

	Name	Date
Planning		
Traffic		
Fire		

For each open utility cut of City streets, a $325 permit shall be required from the City prior to occupancy and/or project acceptance.

2 SHEET LEGEND

Scale: 1"=20'-0"

1 APPROVALS

DMA Architecture PLLC

380-H Knollwood Street, Suite 174
Winston-Salem, NC 27103
phone: 336-723-6360
dishnermoore.com

McKIM&CREED
243 North Front Street
Wilmington, North Carolina 28401
Phone: (910)343-1048 , Fax: (910)251-8282
www.mckimcreed.com

revisions:
A - CITY OF WILMINGTON TRC SUBMITTAL 06/29/16

RIVERPLACE
(Water Street Parking Deck Redevelopment)
Block 190, City of Wilmington
Wilmington Township
New Hanover County, NC 28412

date: 06-29-16
job no. MCE 0205-0001

© 2016 DMA Architecture PLLC

SEAL 022574 ENGINEER RICHARD M. COLLIER
06/29/2016

OVERALL
SHEET LEGEND

C-100

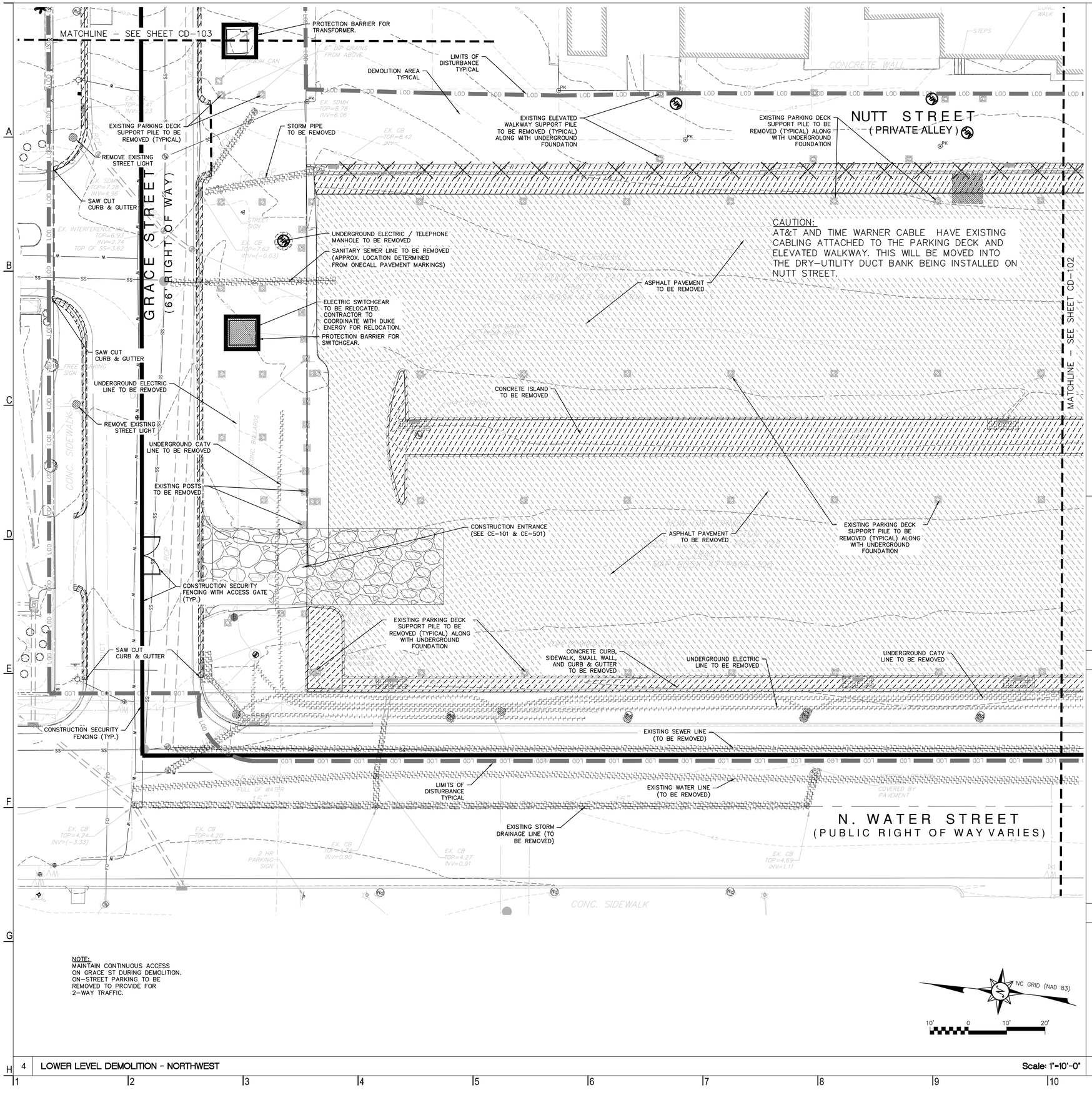

NOTE:
MAINTAIN CONTINUOUS ACCESS ON GRACE ST DURING DEMOLITION. ON-STREET PARKING TO BE REMOVED TO PROVIDE FOR 2-WAY TRAFFIC.

NOTE:
EXISTING BUILDING ROOF DRAINS ALONG NUTT ST ALLEY WILL REMAIN ACTIVE DURING DEMOLITION AND CONSTRUCTION. CONTRACTOR TO PROVIDE TEMPORARY MEASURES TO BY-PASS INTO EXISTING STORM SYSTEMS DURING CONSTRUCTION UNTIL THE PROPOSED STORM SYSTEM IS INSTALLED.

- CURB/CONCRETE WALL, SIDEWALK/STEPS TO BE REMOVED
- ASPHALT/GRAVEL TO BE REMOVED
- RETAINING WALL REMOVAL
- UTILITY LINE TO BE REMOVED (WATER, SANITARY SEWER, STORM, GAS, ELEC, TELEPHONE , CATV, etc.)
- UTILITY TRANSFORMER TO BE REMOVED
- PARKING DECK PILE / SUPPORT TO BE REMOVED
- OTHER REMOVED (SIGNS, VALVES, FIRE HYDRANT...)

3 LEGEND

1. THE CONTRACTOR IS RESPONSIBLE FOR FIELD VERIFYING AND FIELD DETERMINING THE EXACT DEMOLITION LIMITS. QUESTIONS DURING BIDDING SHALL BE DIRECTED TO THE ARCHITECT.
2. WETLANDS DO NOT EXIST ON SITE.
3. CITY OF WILMINGTON TEMPORARY METER REMOVAL POLICY MUST BE ADHERED TO IF CONSTRUCTION OR CONSTRUCTION LAYDOWN AREA REQUIRES THE USE OF PUBLIC SPACES CONTAINING PARKING METERS.
4. THE SITE DEMOLITION CONTRACTOR SHALL REMOVE AND DELIVER TO THE OWNER, IN WORKING CONDITION, ALL ITEMS AS INDICATED ON THE DRAWINGS. THE SITE DEMOLITION CONTRACTOR SHALL TEST THE EXISTING LIGHTING SYSTEM PRIOR TO PERFORMING ANY WORK ON THE SYSTEM AND IDENTIFY ALL DEFECTIVE COMPONENTS AND DAMAGE IN WRITING TO THE ARCHITECT/ENGINEER. IF NONE ARE IDENTIFIED, THE EXISTING SALVAGED FIXTURES AND POLES WILL BE CONSIDERED DAMAGE FREE AND OPERATIONAL AND ANY DAMAGE NOTED AFTER REMOVAL WILL BE CONSIDERED A RESULT OF CONTRACTOR OPERATIONS AND WILL BE REPAIRED OR REPLACED BY THE CONTRACTOR. THE SITE DEMOLITION CONTRACTOR SHALL REMOVE ALL EXISTING UNDERGROUND RACEWAYS AND CONDUCTORS FEEDING THE EXISTING SITE LIGHTING FIXTURES. THE EXISTING ELECTRICAL FEEDER FOR THE SITE LIGHTING WILL BE DE-ENERGIZED BY THE ELECTRICAL CONTRACTOR PRIOR TO DEMOLITION.
5. THE CONTRACTOR IS REQUIRED TO CAPTURE ALL REFRIGERANT ON ALL EQUIPMENT PLANNED FOR DEMOLITION CONTAINING REFRIGERANT.
6. CITY OF WILMINGTON TRAFFIC CONTROL SIGNS LOCATED IN THE RIGHT-OF-WAY SHALL BE MAINTAINED TO THE MAXIMUM EXTENT PRACTIBLE OR REPLACED AT THE END OF CONSTRUCTION AT LOCATION IDENTIFIED BY CITY OF WILMINGTON TRAFFIC ENGINEERING OR SHOWN ON THE SITE PLAN.

2 DEMOLITION NOTES - TYPICAL FOR ALL DEMOLITION SHEETS

STORMWATER MANAGEMENT PLAN
APPROVED
CITY OF WILMINGTON
ENGINEERING DEPARTMENT
DATE _____ PERMIT #_____
SIGNED_____

Approved Construction Plan

	Name	Date
Planning		
Traffic		
Fire		

For each open utility cut of City streets, a $325 permit shall be required from the City prior to occupancy and/or project acceptance.

4 LOWER LEVEL DEMOLITION - NORTHWEST

Scale: 1"=10'-0"

1 APPROVALS

DMA Architecture PLLC
380-H Knollwood Street, Suite 174
Winston-Salem, NC 27103
phone: 336-723-6360
dishmermoore.com

McKIM&CREED
243 North Front Street
Wilmington, North Carolina 28401
Phone: (910)343-1048 , Fax: (910)251-8282
www.mckimcreed.com

revisions:
A - CITY OF WILMINGTON TRC SUBMITTAL 06/29/16

RIVERPLACE
(Water Street Parking Deck Redevelopment)
Block 190, City of Wilmington
Wilmington Township
New Hanover County, NC 28412

date: 06-29-16
job no. MCE 0205-0001

© 2016 DMA Architecture PLLC

NORTH CAROLINA PROFESSIONAL ENGINEER SEAL 022574 RICHARD M. COLLIER
06/29/2016

LOWER LEVEL DEMOLITION PLAN (NW)

CD-101

S:\0205\0001\80-Drawings\CD\01_0205001.dwg, 6/29/2016 11:56:44 AM, Charley, 11

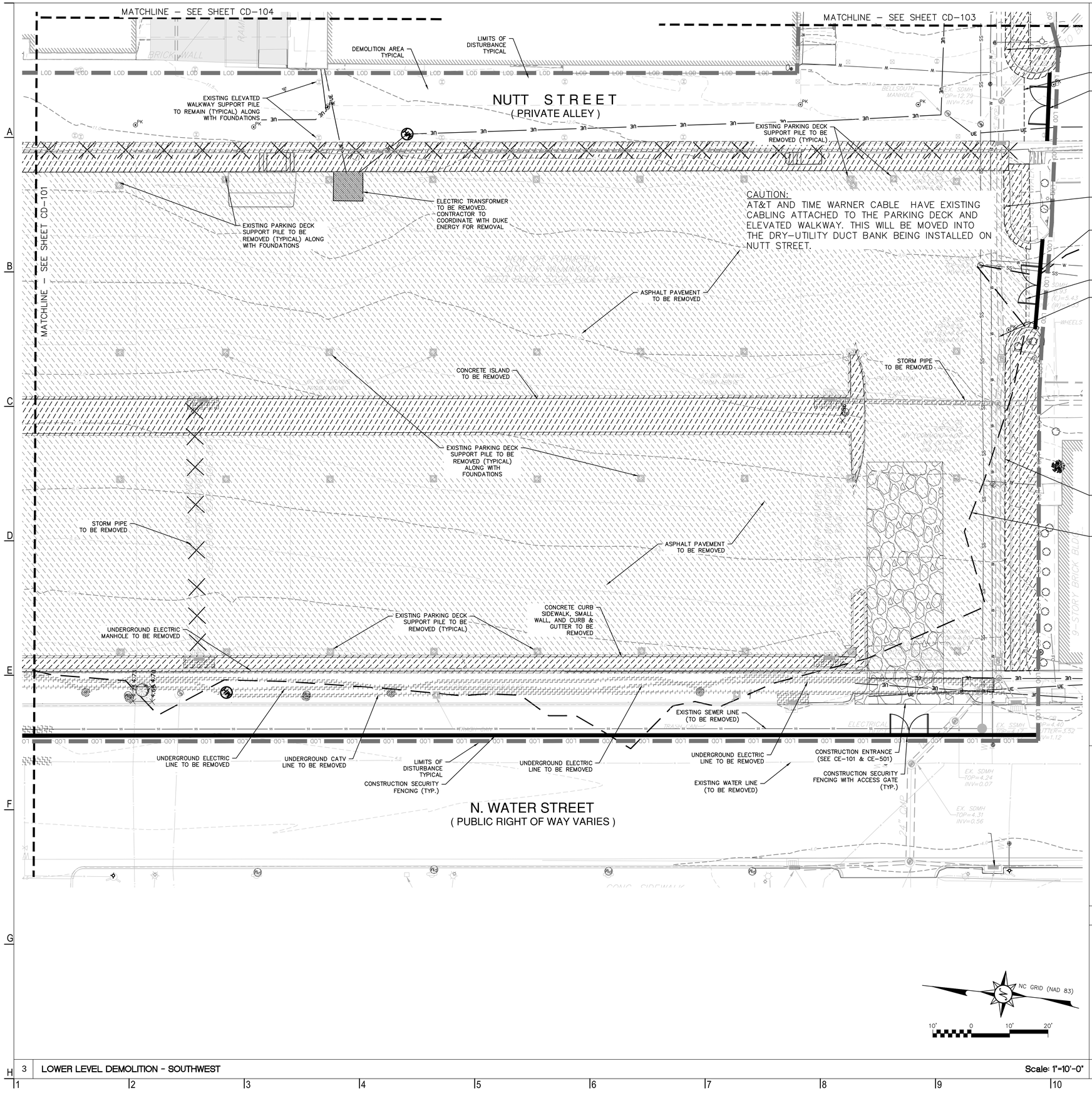

NOTE:
EXISTING BUILDING ROOF DRAINS ALONG NUTT ST ALLEY WILL REMAIN ACTIVE DURING DEMOLITION AND CONSTRUCTION. CONTRACTOR TO PROVIDE TEMPORARY MEASURES TO BY-PASS INTO EXISTING STORM SYSTEMS DURING CONSTRUCTION UNTIL THE PROPOSED STORM SYSTEM IS INSTALLED.

CURB/CONCRETE WALL, SIDEWALK/STEPS TO BE REMOVED
ASPHALT/GRAVEL TO BE REMOVED
RETAINING WALL REMOVAL
UTILITY LINE TO BE REMOVED (WATER, SANITARY SEWER, STORM, GAS, ELEC, TELEPHONE , CATV, etc.)
UTILITY TRANSFORMER TO BE REMOVED
PARKING DECK PILE / SUPPORT TO BE REMOVED
OTHER REMOVED (SIGNS, VALVES, FIRE HYDRANT...)

2 LEGEND

STORMWATER MANAGEMENT PLAN
APPROVED
CITY OF WILMINGTON
ENGINEERING DEPARTMENT
DATE _____ PERMIT #_____
SIGNED_____

Approved Construction Plan
Name Date
Planning_____
Traffic_____
Fire_____

For each open utility cut of City streets, a $325 permit shall be required from the City prior to occupancy and/or project acceptance.

3 LOWER LEVEL DEMOLITION - SOUTHWEST

Scale: 1"=10'-0"

1 APPROVALS

DMA Architecture PLLC
380-H Knollwood Street, Suite 174
Winston-Salem, NC 27103
phone: 336-723-6360
dishnermoore.com

McKIM&CREED
243 North Front Street
Wilmington, North Carolina 28401
Phone: (910)343-1048 , Fax: (910)251-8282
www.mckimcreed.com

revisions:
A - CITY OF WILMINGTON TRC SUBMITTAL 06/29/16

RIVERPLACE
(Water Street Parking Deck Redevelopment)
Block 190, City of Wilmington
Wilmington Township
New Hanover County, NC 28412

date: 06-29-16
job no. MCE 0205-0001

© 2016 DMA Architecture PLLC

NORTH CAROLINA PROFESSIONAL SEAL 022574 ENGINEER RICHARD M. COLLIER
06/29/2016

LOWER LEVEL DEMOLITION PLAN (SW)

CD-102

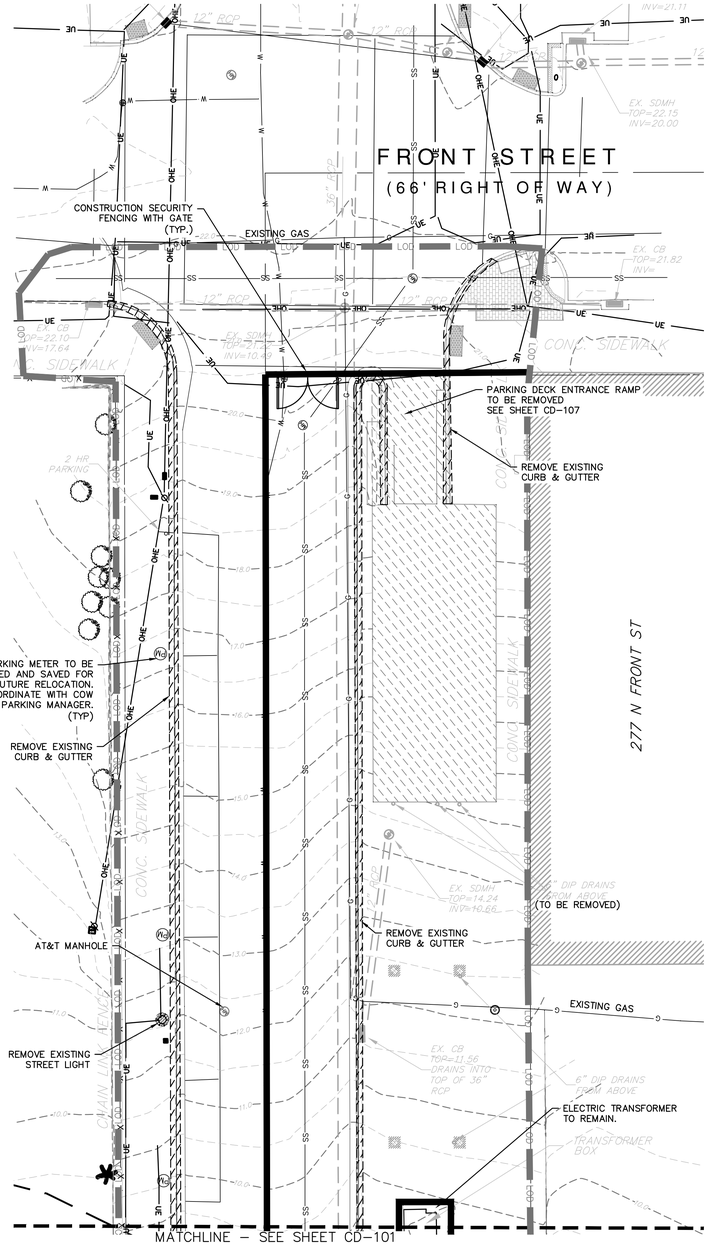

NOTE:
MAINTAIN CONTINUOUS ACCESS ON GRACE ST DURING DEMOLITION. ON-STREET PARKING TO BE REMOVED TO PROVIDE FOR 2-WAY TRAFFIC.

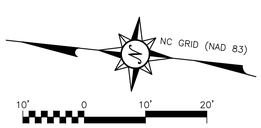

4 LOWER LEVEL DEMOLITION - NORTHEAST Scale: 1"=10'-0"

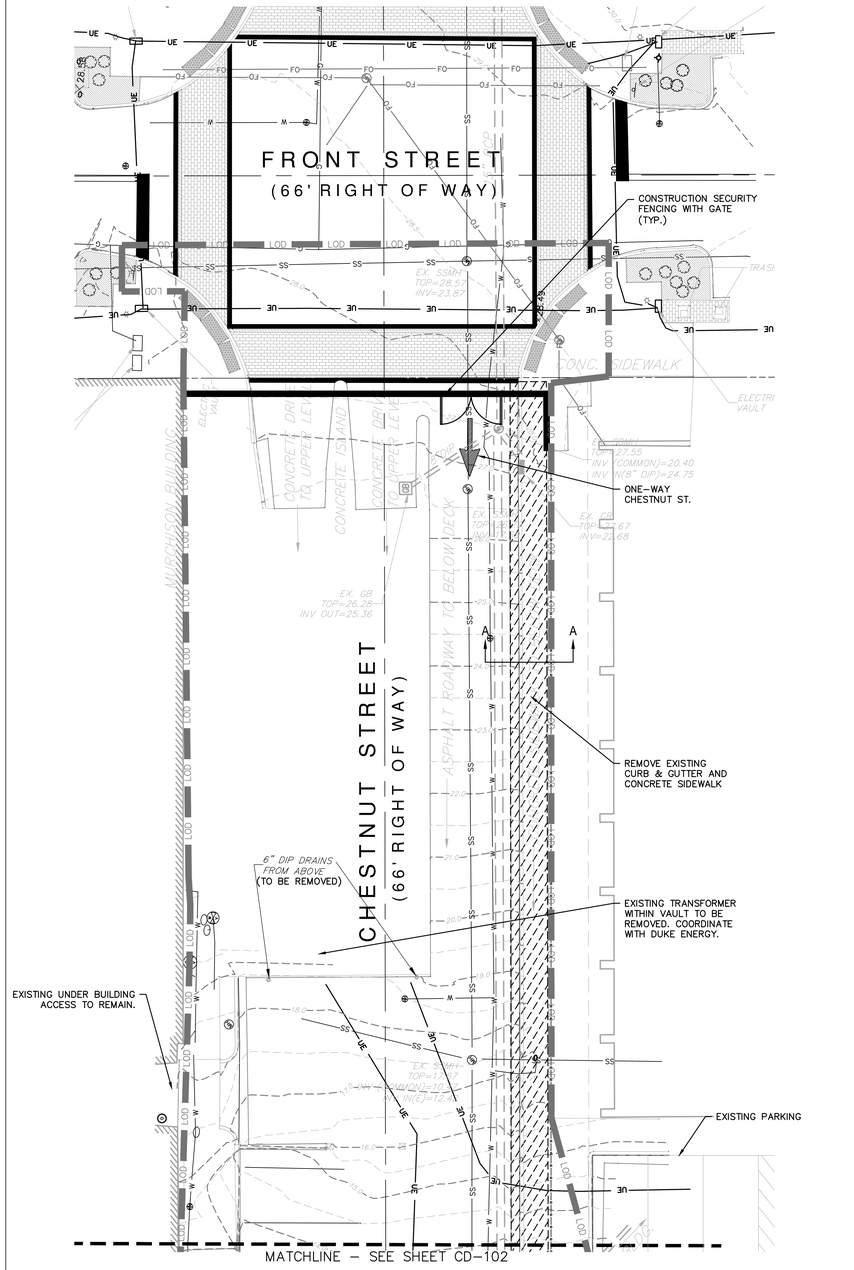

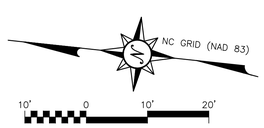

3 LOWER LEVEL DEMOLITION - SOUTHEAST Scale: 1"=10'-0"

SECTION A-A

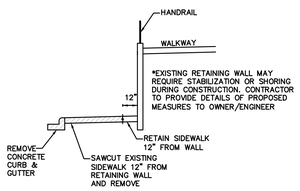

3 SECTION A-A

CURB/CONCRETE WALL, SIDEWALK/STEPS TO BE REMOVED
ASPHALT/GRAVEL TO BE REMOVED
RETAINING WALL REMOVAL
UTILITY LINE TO BE REMOVED (WATER, SANITARY SEWER, STORM, GAS, ELEC, TELEPHONE , CATV, etc.)
UTILITY TRANSFORMER TO BE REMOVED
PARKING DECK PILE / SUPPORT TO BE REMOVED
OTHER REMOVED (SIGNS, VALVES, FIRE HYDRANT...)

2 LEGEND

STORMWATER MANAGEMENT PLAN
APPROVED
CITY OF WILMINGTON
ENGINEERING DEPARTMENT
DATE _____ PERMIT #_____
SIGNED_____

Approved Construction Plan
Name Date
Planning_____
Traffic_____
Fire_____

For each open utility cut of City streets, a $325 permit shall be required from the City prior to occupancy and/or project acceptance.

1 APPROVALS

DMA Architecture PLLC
380-H Knollwood Street, Suite 174
Winston-Salem, NC 27103
phone: 336-723-6360
dishnermoore.com

McKIM&CREED
243 North Front Street
Wilmington, North Carolina 28401
Phone: (910)343-1048 , Fax: (910)251-8282
www.mckimcreed.com

revisions:
A - CITY OF WILMINGTON TRC SUBMITTAL 06/29/16

RIVERPLACE
(Water Street Parking Deck Redevelopment)
Block 190, City of Wilmington
Wilmington Township
New Hanover County, NC 28412

date: 06-29-16
job no. MCE 0205-0001

© 2016 DMA Architecture PLLC

SEAL 022574 ENGINEER RICHARD M. COLLIER 06/29/2016

LOWER LEVEL DEMOLITION PLAN (NE & SE)

CD-103

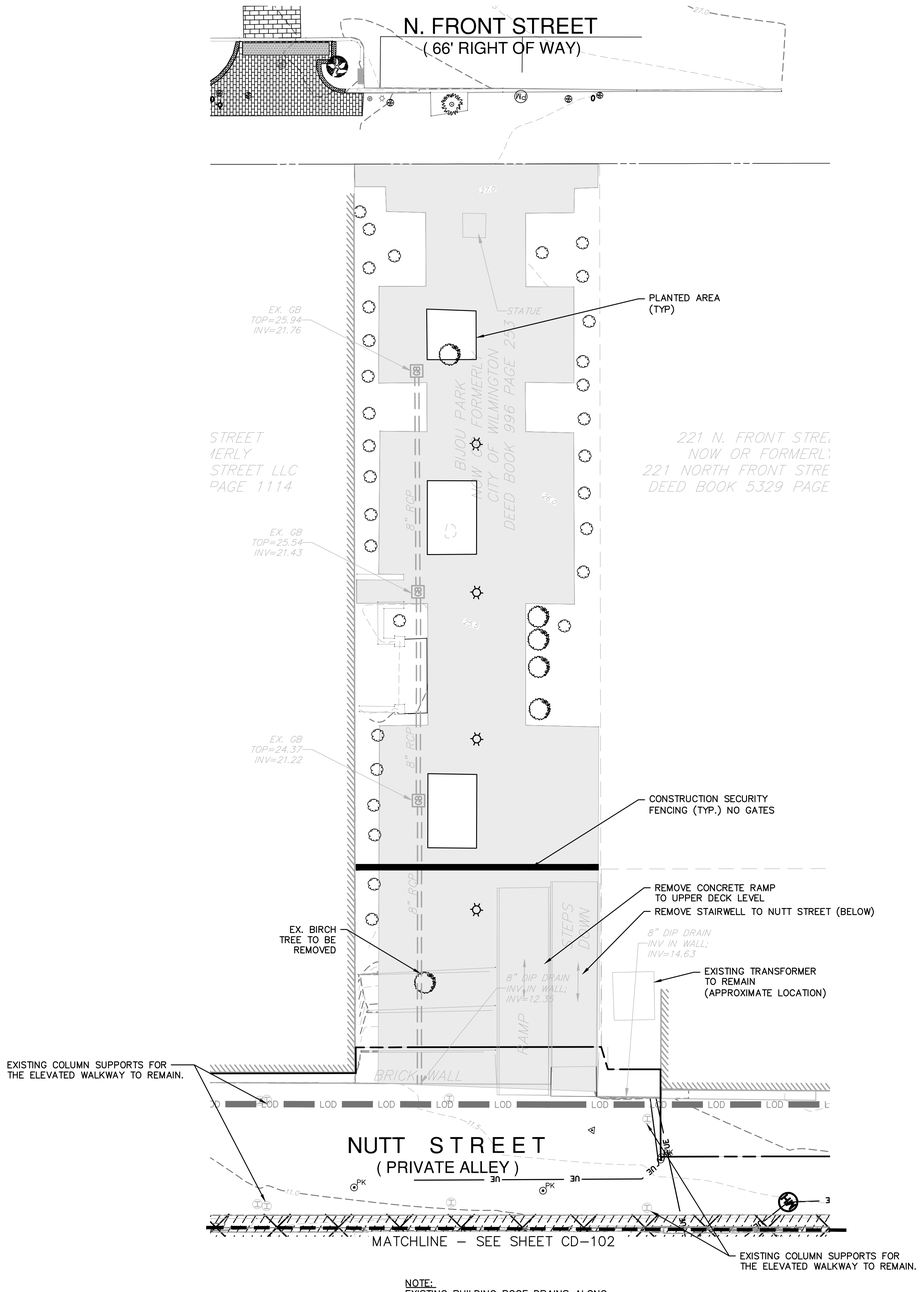

NOTE:
EXISTING BUILDING ROOF DRAINS ALONG NUTT ST ALLEY WILL REMAIN ACTIVE DURING DEMOLITION AND CONSTRUCTION. CONTRACTOR TO PROVIDE TEMPORARY MEASURES TO BY-PASS INTO EXISTING STORM SYSTEMS DURING CONSTRUCTION UNTIL THE PROPOSED STORM SYSTEM IS INSTALLED.

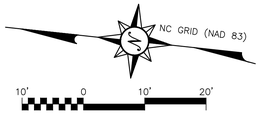

CURB/CONCRETE WALL, SIDEWALK/STEPS TO BE REMOVED

ASPHALT/GRAVEL TO BE REMOVED

RETAINING WALL REMOVAL

UTILITY LINE TO BE REMOVED (WATER, SANITARY SEWER, STORM, GAS, ELEC, TELEPHONE , CATV, etc.)

UTILITY TRANSFORMER TO BE REMOVED

PARKING DECK PILE / SUPPORT TO BE REMOVED

OTHER REMOVED (SIGNS, VALVES, FIRE HYDRANT...)

2 LEGEND

STORMWATER MANAGEMENT PLAN
APPROVED
CITY OF WILMINGTON
ENGINEERING DEPARTMENT
DATE _____ PERMIT #_____
SIGNED_____

Approved Construction Plan

	Name	Date
Planning		
Traffic		
Fire		

For each open utility cut of City streets, a $325 permit shall be required from the City prior to occupancy and/or project acceptance.

3 LOWER LEVEL DEMOLITION - BIJOUX PARK

Scale: 1"=10'-0"

1 APPROVALS

DMA Architecture PLLC

380-H Knollwood Street, Suite 174
Winston-Salem, NC 27103
phone: 336-723-6360
dishnermoore.com

McKIM&CREED
243 North Front Street
Wilmington, North Carolina 28401
Phone: (910)343-1048 , Fax: (910)251-8282
www.mckimcreed.com

revisions:
A - CITY OF WILMINGTON TRC SUBMITTAL 06/29/16

RIVERPLACE
(Water Street Parking Deck Redevelopment)
Block 190, City of Wilmington
Wilmington Township
New Hanover County, NC 28412

date: 06-29-16
job no. MCE 0205-0001

© 2016 DMA Architecture PLLC

SEAL 022574 ENGINEER RICHARD M. COLLIER
06/29/2016

DEMOLITION PLAN
(BIJOU PARK)

CD-104

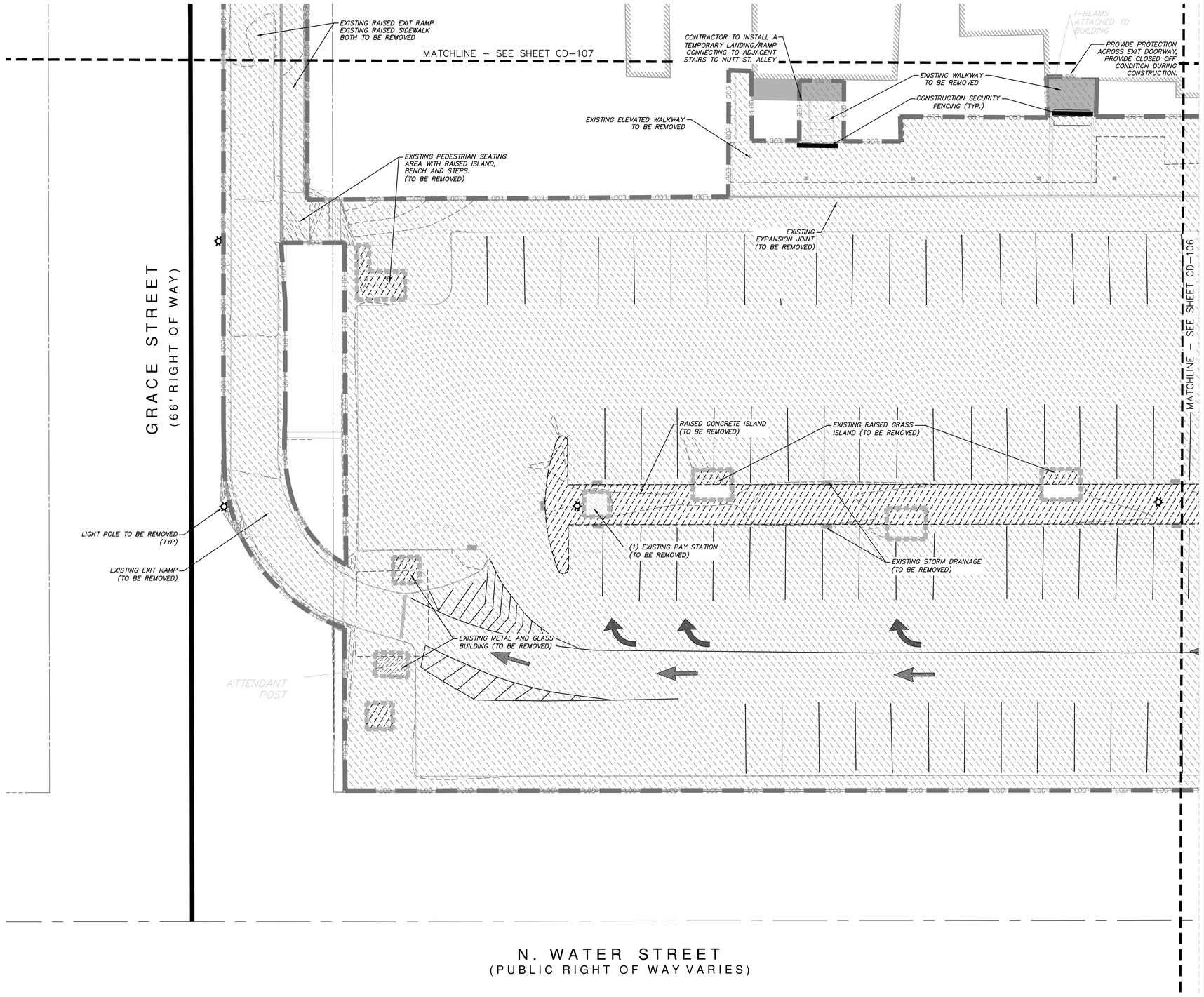

4 UPPER LEVEL DEMOLITION - NORTHWEST

Scale: 1"=10'-0"

CURB/CONCRETE WALL, SIDEWALK/STEPS TO BE REMOVED

ASPHALT/GRAVEL TO BE REMOVED

RETAINING WALL REMOVAL

UTILITY LINE TO BE REMOVED (WATER, SANITARY SEWER, STORM, GAS, ELEC, TELEPHONE , CATV, etc.)

UTILITY TRANSFORMER TO BE REMOVED

PARKING DECK PILE / SUPPORT TO BE REMOVED

OTHER REMOVED (SIGNS, VALVES, FIRE HYDRANT...)

3 LEGEND

NOTES ARE APPLICABLE TO ALL UPPER LEVEL DEMOLITION PLAN SHEETS

CONTRACTOR SHALL REMOVE ALL PORTIONS OF THE PARKING DECK WESTWARD FROM THE EXPANSION JOINT SEPARATING THE DECK FROM THE ELEVATED WALKWAY ADJACENT TO THE EXISTING BUILDINGS. THIS DEMOLITION WORK INCLUDES BUT NOT LIMITED TO THE FOLLOWING:

1. CONCRETE AND STEEL;
2. STORM INLETS AND PIPING;
3. RAISED GRASSED BEDS;
4. SITE LIGHTING AND WIRING;
5. TWO (2) PAY STATIONS (PARK WILMINGTON WILL REMOVE – CONTRACTOR TO COORDINATE DIRECTLY);
6. TWO (2) EXISTING METAL AND GLASS ENCLOSURES;
7. ONE (1) ELEVATED PEDESTRIAN AREA WITH BENCH AND METAL COVER;
8. ONE (1) WOODEN BENCH;
9. ENTRANCE RAMPS FROM FRONT STREET ONTO THE UPPER DECK LEVEL;
10. EXIT RAMP AND ELEVATED SIDEWALK FROM UPPER LEVEL DECK TO FRONT STREET;
11. CONCRETE RAILING AND CHAIN LINK FENCING; AND
12. CONCRETE VERTICAL BARRIERS.
13. SEE SHEET CD-101 FOR ADDITIONAL NOTES

2 DEMOLITION NOTES

STORMWATER MANAGEMENT PLAN
APPROVED
CITY OF WILMINGTON
ENGINEERING DEPARTMENT
DATE _____ PERMIT #_____
SIGNED_____

Approved Construction Plan

	Name	Date
Planning		
Traffic		
Fire		

For each open utility cut of City streets, a $325 permit shall be required from the City prior to occupancy and/or project acceptance.

1 APPROVALS

DMA Architecture PLLC

380-H Knollwood Street, Suite 174
Winston-Salem, NC 27103
phone: 336-723-6360
dishnermoore.com

McKIM&CREED
243 North Front Street
Wilmington, North Carolina 28401
Phone: (910)343-1048 , Fax: (910)251-8282
www.mckimcreed.com

revisions:
A - CITY OF WILMINGTON TRC SUBMITTAL 06/29/16

RIVERPLACE
(Water Street Parking Deck Redevelopment)
Block 190, City of Wilmington
Wilmington Township
New Hanover County, NC 28412

date: 06-29-16
job no. MCE 0205-0001

© 2016 DMA Architecture PLLC

SEAL 022574 ENGINEER RICHARD M. COLLIER
06/29/2016

UPPER LEVEL DEMOLITION PLAN (NW)

CD-105

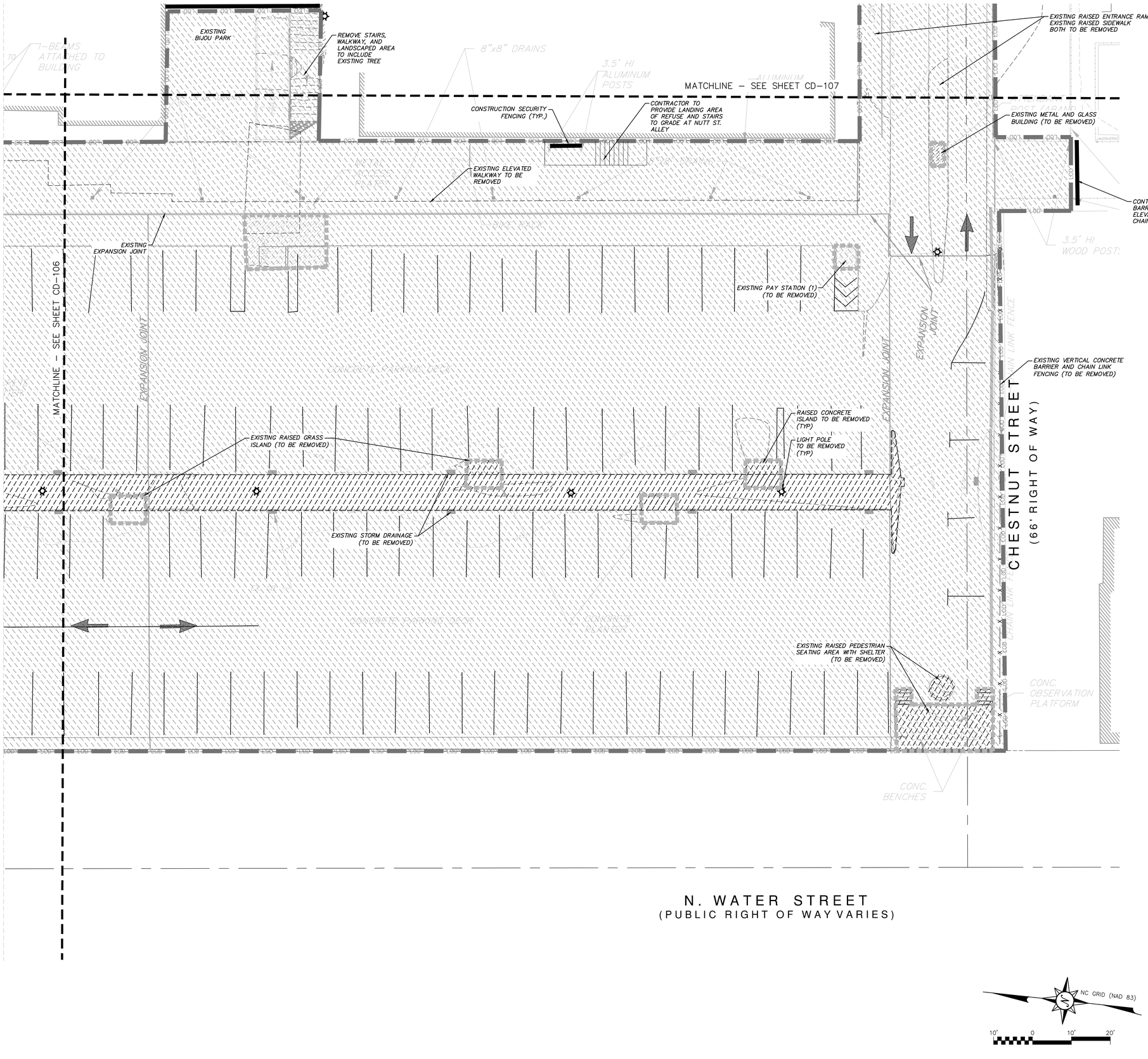

3 UPPER LEVEL DEMOLITION - SOUTHWEST

Scale: 1"=10'-0"

CURB/CONCRETE WALL, SIDEWALKS/STEPS TO BE REMOVED

ASPHALT/GRAVEL TO BE REMOVED

RETAINING WALL REMOVAL

UTILITY LINE TO BE REMOVED (WATER, SANITARY SEWER, STORM, GAS, ELEC, TELEPHONE , CATV, etc.)

UTILITY TRANSFORMER TO BE REMOVED

PARKING DECK PILE / SUPPORT TO BE REMOVED

OTHER REMOVED (SIGNS, VALVES, FIRE HYDRANT...)

2 LEGEND

STORMWATER MANAGEMENT PLAN
APPROVED
CITY OF WILMINGTON
ENGINEERING DEPARTMENT
DATE _____ PERMIT #_____
SIGNED_____

Approved Construction Plan

	Name	Date
Planning		
Traffic		
Fire		

For each open utility cut of City streets, a $325 permit shall be required from the City prior to occupancy and/or project acceptance.

1 APPROVALS

DMA Architecture PLLC

380-H Knollwood Street, Suite 174
Winston-Salem, NC 27103
phone: 336-723-6360
dishnermoore.com

McKIM&CREED
243 North Front Street
Wilmington, North Carolina 28401
Phone: (910)343-1048 , Fax: (910)251-8282
www.mckimcreed.com

revisions:
A - CITY OF WILMINGTON TRC SUBMITTAL 06/29/16

RIVERPLACE
(Water Street Parking Deck Redevelopment)
Block 190, City of Wilmington
Wilmington Township
New Hanover County, NC 28412

date: 06-29-16
job no. MCE 0205-0001

© 2016 DMA Architecture PLLC

SEAL 022574 ENGINEER RICHARD M. COLLIER
06/29/2016

UPPER LEVEL DEMOLITION PLAN (SW)

CD-106

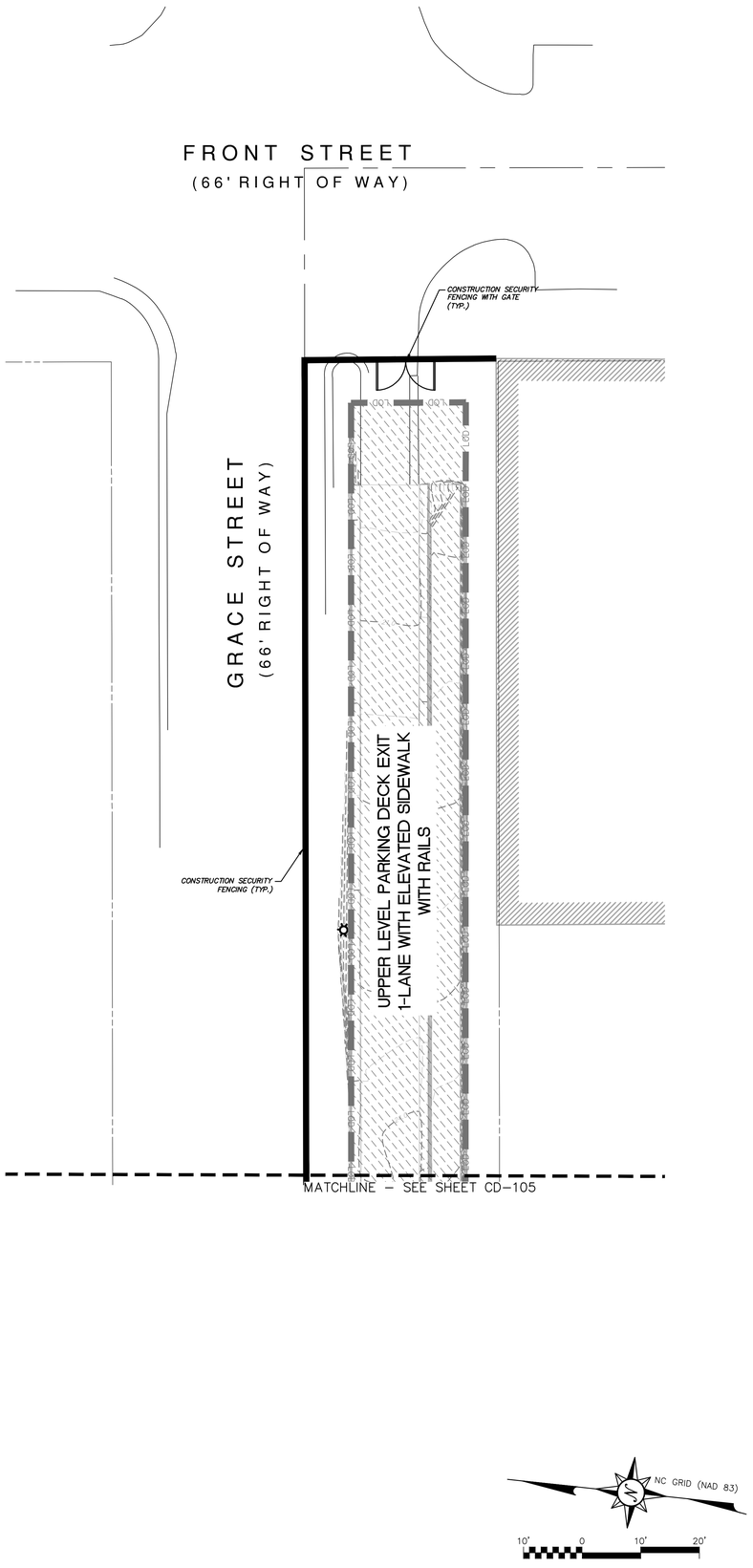

4 UPPER LEVEL DEMOLITION - NORTHEAST Scale: 1"=10'-0"

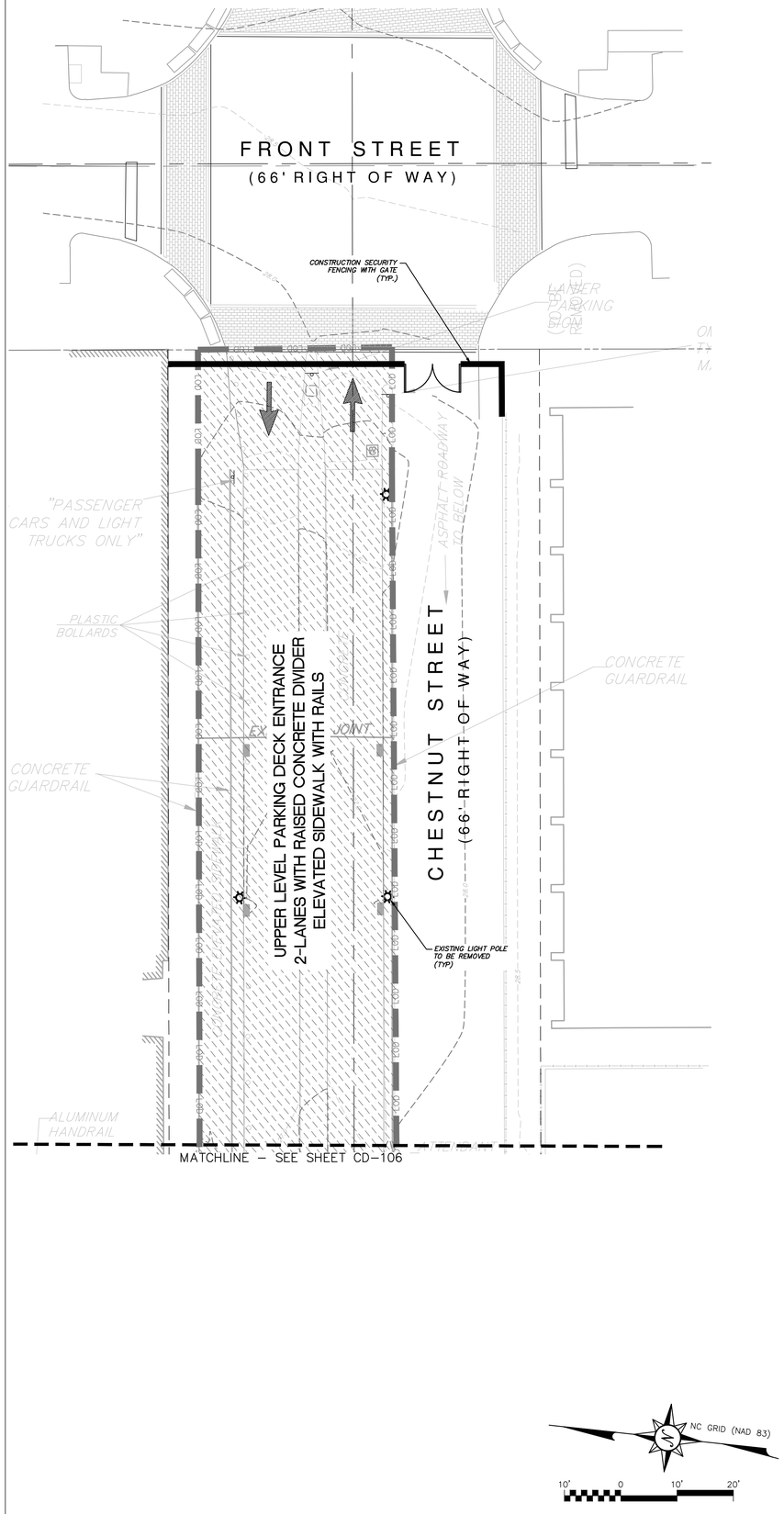

3 UPPER LEVEL DEMOLITION - SOUTHEAST Scale: 1"=10'-0"

CURB/CONCRETE WALL TO BE REMOVED
ASPHALT/GRAVEL TO BE REMOVED
SIDEWALK/STEPS TO BE REMOVED
RETAINING WALL REMOVAL
UTILITY LINE TO BE REMOVED (WATER, SANITARY SEWER, STORM, GAS, ELEC, TELEPHONE , CATV, etc.)
UTILITY TRANSFORMER TO BE REMOVED
PARKING DECK PILE / SUPPORT TO BE REMOVED
OTHER REMOVED (SIGNS, VALVES, FIRE HYDRANT...)

2 LEGEND

STORMWATER MANAGEMENT PLAN
APPROVED
CITY OF WILMINGTON
ENGINEERING DEPARTMENT
DATE _____ PERMIT #_____
SIGNED_____

Approved Construction Plan
Name Date
Planning_____
Traffic_____
Fire_____

For each open utility cut of City streets, a $325 permit shall be required from the City prior to occupancy and/or project acceptance.

1 APPROVALS

DMA Architecture PLLC
380-H Knollwood Street, Suite 174
Winston-Salem, NC 27103
phone: 336-723-6360
dishnermoore.com

McKIM&CREED
243 North Front Street
Wilmington, North Carolina 28401
Phone: (910)343-1048 , Fax: (910)251-8282
www.mckimcreed.com

revisions:
A - CITY OF WILMINGTON TRC SUBMITTAL 06/29/16

RIVERPLACE
(Water Street Parking Deck Redevelopment)
Block 190, City of Wilmington
Wilmington Township
New Hanover County, NC 28412

date: 06-29-16
job no. MCE 0205-0001

© 2016 DMA Architecture PLLC

SEAL 022574 ENGINEER RICHARD M. COLLIER 06/29/2016

UPPER LEVEL DEMOLITION PLAN (NE & SE)

CD-107

EROSION CONTROL MAINTENANCE PLAN:

1. ALL SEDIMENT AND EROSION CONTROL DEVICES SHALL BE INSPECTED AND REPAIRED, AS NECESSARY, EVERY SEVEN (7) DAYS OR AFTER EACH RAINFALL OCCURRENCE THAT EXCEEDS ONE-HALF (0.5) INCH.
2. ALL EROSION CONTROL DEVICES SHALL BE PROPERLY MAINTAINED DURING ALL PHASES OF CONSTRUCTION UNTIL THE COMPLETION OF ALL CONSTRUCTION ACTIVITIES AND ALL DISTURBED AREAS HAVE BEEN STABILIZED. ADDITIONAL CONTROL DEVICES MAY BE REQUIRED DURING CONSTRUCTION IN ORDER TO CONTROL EROSION AND/OR OFFSITE SEDIMENTATION. ALL TEMPORARY CONTROL DEVICES SHALL BE REMOVED ONCE CONSTRUCTION IS COMPLETE AND THE SITE IS STABILIZED.
3. SEDIMENT WILL BE REMOVED FROM BEHIND THE SILT FENCE WHEN IT BECOMES ABOUT 0.5 FEET DEEP. THE SEDIMENT FENCE WILL BE REPAIRED OR REPLACED AS NECESSARY TO MAINTAIN A BARRIER.
4. ALL AREAS WILL BE FERTILIZED, RESEEDED AS NECESSARY, AND MULCHED ACCORDING TO SPECIFICATIONS IN THE VEGETATIVE PLAN TO MAINTAIN A VIGOROUS, DENSE VEGETATIVE COVER.
5. STONE CONSTRUCTION ENTRANCE TO BE CLEANED WHEN SEDIMENT ACCUMULATIONS ARE VISIBLE OR SEDIMENT IS TRACKED ON TO THE PAVEMENT. STONE WILL BE PERIODICALLY TOP DRESSED WITH 2 INCHES OF #4 STONE TO MAINTAIN 6 INCH DEPTH. THE CONTRACTOR SHALL DAILY REMOVE MUD/SOIL FROM PAVEMENT, AS REQUIRED.
6. INSPECT TEMPORARY DIVERSIONS AND CHECK DAMS ONCE A WEEK AND AFTER EVERY RAINFALL. IMMEDIATELY REMOVE SEDIMENT FROM THE FLOW AREA AND REPAIR THE DIVERSION RIDGE AND CHECK DAM. CAREFULLY CHECK OUTLETS AND MAKE TIMELY REPAIRS AS NEEDED. WHEN THE AREA PROTECTED IS PERMANENTLY STABILIZED, REMOVE THE RIDGE AND THE CHANNEL TO BLEND WITH THE NATURAL GROUND LEVEL AND APPROPRIATELY STABILIZE IT.
7. INSPECT TEMPORARY SEDIMENT TRAPS AT LEAST WEEKLY AND AFTER EACH SIGNIFICANT (0.5 INCH OR GREATER) RAINFALL EVENT AND REPAIR IMMEDIATELY. REMOVE SEDIMENT, AND RESTORE THE TRAP TO THE ORIGINAL DIMENSIONS WHEN THE SEDIMENT HAS ACCUMULATED TO ONE-HALF THE DESIGN DEPTH OF THE TRAP. PLACE THE SEDIMENT THAT IS REMOVED IN THE DESIGNATED DISPOSAL AREA, AND REPLACE THE PART OF THE GRAVEL FACING THAT IS IMPAIRED BY THE SEDIMENT.
8. INSPECT BAFFLES AT LEAST ONCE A WEEK AND AFTER EACH RAINFALL. MAKE ANY REQUIRED REPAIRS IMMEDIATELY. BE SURE TO MAINTAIN ACCESS TO THE BAFFLES. SHOULD THE FABRIC OF A BAFFLE COLLAPSE, TEAR, DECOMPOSE, OR BECOME INEFFECTIVE, REPLACE IT PROMPTLY. REMOVE SEDIMENT DEPOSITS WHEN IT REACHES HALF FULL TO PROVIDE ADEQUATE STORAGE VOLUME FOR THE NEXT RAIN AND TO REDUCE PRESSURE ON THE BAFFLES.
9. INSPECT INLETS AT LEAST WEEKLY AND AFTER EACH SIGNIFICANT (0.5" OR GREATER) RAINFALL EVENT. CLEAR THE MESH WIRE OF ANY DEBRIS OR OTHER OBJECTS TO PROVIDE ADEQUATE FLOW FOR SUBSEQUENT RAINS. TAKE CARE NOT TO DAMAGE OR UNDERCUT THE WIRE MESH DURING SEDIMENT REMOVAL. REPLACE STONE AS NEEDED.

NOTE COW(18-458)

NO EQUIPMENT IS ALLOWED ONSITE UNTIL ALL TREE PROTECTION FENCING AND SILT FENCING HAS BEEN INSTALLED AND APPROVED AS APPROPRIATE.

NOTE (G.S. 113A-57 (2))

THE ANGLE FOR GRADED SLOPES AND FILLS SHALL BE NO GREATER THAN THE ANGLE THAT CAN BE RETAINED BY VEGETATIVE COVER OR OTHER ADEQUATE EROSION CONTROL DEVICES OR STRUCTURES. IN ANY EVENT, SLOPES LEFT EXPOSED WILL, WITHIN 21 CALENDAR DAYS OF COMPLETION OF ANY GRADING, BE PLANTED OR OTHERWISE PROVIDED WITH TEMPORARY OR PERMANENT GROUND COVER, DEVISES OR STRUCTURES SUFFICIENT TO RESTRAIN EROSION.

12 EROSION CONTROL NOTES Not to Scale

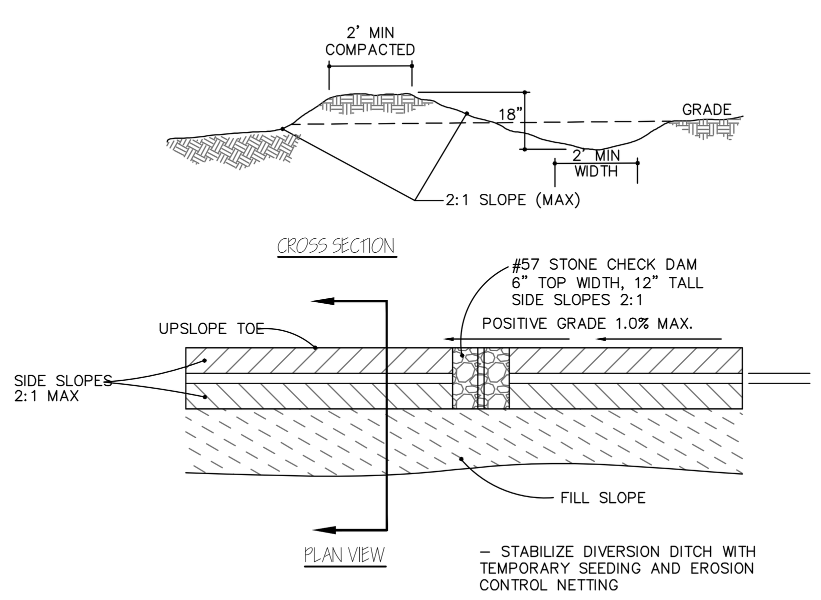

11 TEMPORARY DIVERSION DITCH Not to Scale

10 NOT USED Not to Scale

DEMOLITION NOTES:

1. THE CONTRACTOR IS RESPONSIBLE FOR FIELD VERIFYING AND FIELD DETERMINING THE EXACT DEMOLITION LIMITS.
2. THE CONTRACTOR SHALL VISIT THE SITE TO BECOME FAMILIARIZED WITH FIELD DEMOLITION CONDITIONS.
3. THE CONTRACTOR IS RESPONSIBLE FOR THE PROPER DISPOSAL OF ALL DEMOLISHED DEBRIS ASSOCIATED WITH THE PROJECT.
4. THE CONTRACTOR IS RESPONSIBLE FOR CONTROLLING DUST GENERATED BY THE WORK, INCLUDING BUT NOT LIMITED TO DEMOLITION AND CONSTRUCTION ACTIVITIES, SITE VEHICULAR TRAFFIC AND RELATED OPERATIONS.
5. THE CONTRACTOR IS RESPONSIBLE FOR HAVING ALL EXISTING UTILITIES LOCATED PRIOR TO BEGINNING ANY DEMOLITION. CONTRACTOR SHALL NOTIFY THE CITY OF WILMINGTON AT LEAST 72 HOURS PRIOR TO BEGINNING CONSTRUCTION OR EXCAVATION TO HAVE EXISTING UTILITIES LOCATED.
6. EXISTING UTILITIES AND STRUCTURES SHOWN, BOTH UNDERGROUND AND ABOVE GROUND, ARE BASED ON FIELD SURVEY AND THE BEST AVAILABLE RECORD DRAWINGS. THE CONTRACTOR SHALL VERIFY FIELD CONDITIONS PRIOR TO BEGINNING RELATED CONSTRUCTION. ANY DISCREPANCIES SHALL BE REPORTED TO THE OWNER'S REPRESENTATIVE AND ENGINEER IMMEDIATELY.
7. THE CONTRACTOR IS RESPONSIBLE FOR THE COORDINATION OF DISCONNECTING AND ABANDONING ALL EXISTING UTILITIES UNLESS OTHERWISE NOTED. ALL EXISTING UTILITIES AND ASSOCIATED PIPING, ETC. NOT IN USE ON THE SITE SHALL BE PROPERLY ABANDONED AND REMOVED.
8. THE CONTRACTOR IS RESPONSIBLE FOR THE PROTECTION OF ANY EXISTING UTILITIES THAT REMAIN IN SERVICE DURING DEMOLITION.
9. THE CONTRACTOR IS RESPONSIBLE FOR COORDINATING THE REMOVAL OR RELOCATION OF ANY EXISTING UTILITY POLES/GUY LINES, LIGHT POLES, TELEPHONE PEDESTALS. THE GENERAL CONTRACTOR WILL BE RESPONSIBLE FOR CONTACTING THE APPLICABLE UTILITY COMPANY AS REQUIRED.
10. THE CONTRACTOR IS RESPONSIBLE FOR STABILIZATION OF ALL DISTURBED AREAS AND SLOPES ON AND OFF SITE IN ACCORDANCE WITH THE EROSION CONTROL MEASURES SPECIFIED ON THE PLANS AND IN THE SPECIFICATIONS. THE CONTRACTOR SHALL COORDINATE WITH THE OWNER TO DETERMINE WHO IS RESPONSIBLE FOR PROVIDING THE PERMANENT STABILIZATION MEASURES AND THE TYPE OF PERMANENT MEASURES PRIOR TO BEGINNING DEMOLITION AND CONSTRUCTION. THE PERMANENT STABILIZATION MEASURES SHALL BE IN PLACE AND ACCEPTABLE TO THE OWNERS REPRESENTATIVE AND ENGINEER PRIOR TO PROJECT CLOSEOUT. COORDINATE INSPECTION WITH THE OWNER AND ENGINEER PRIOR TO PROJECT CLOSEOUT.
11. THE CONTRACTOR IS RESPONSIBLE FOR COORDINATING THE REQUIRED INSPECTIONS ON THE PROJECT.

SEEDBED PREPARATION:

1. CHISEL COMPACTED AREAS AND SPREAD TOPSOIL 3 INCHES DEEP OVER ADVERSE SOIL CONDITIONS, IF AVAILABLE.
2. RIP THE ENTRANCE AREA TO 6 INCHES DEPTH.
3. REMOVE ALL LOOSE ROCK, ROOTS, AND OTHER OBSTRUCTIONS LEAVING SURFACE REASONABLY SMOOTH AND UNIFORM.
4. APPLY AGRICULTURAL LIME, FERTILIZER, AND SUPERPHOSPHATE UNIFORMLY AND MIX WITH SOIL (SEE BELOW*).
5. CONTINUE TILLAGE UNTIL A WELL - PULVERIZED, FIRM, REASONABLY UNIFORM SEEDBED IS PREPARED 4 TO 6 INCHES DEEP.
6. SEED ON A FRESHLY PREPARED SEEDBED AND COVER SEED LIGHTLY WITH SEEDING EQUIPMENT OR CULTIPACK AFTER SEEDING.
7. MULCH IMMEDIATELY AFTER SEEDING AND ANCHOR MULCH.
8. INSPECT ALL SEEDED AREAS AND MAKE NECESSARY REPAIRS OR RESEEDINGS WITHIN THE PLANTING SEASON, IF POSSIBLE. IF STAND SHOULD BE OVER 60% DAMAGED, REESTABLISH FOLLOWING ORIGINAL LIME, FERTILIZER AND SEEDING RATES.
9. CONSULT CONSERVATION INSPECTOR ON MAINTENANCE TREATMENT AND FERTILIZATION AFTER PERMANENT COVER IS ESTABLISHED.
10. * APPLY: AGRICULTURAL LIMESTONE - 2 TONS/ACRE
    FERTILIZER - 1000 LBS/ACRE (10-10-10)
    SUPERPHOSPHATE - 500 LBS/ACRE (20%)
    MULCH - 2 TONS/ACRE (SMALL GRAIN STRAW)
    ANCHOR - ASPHALT EMULSION AT 450 GAL/ACRE

TEMPORARY SEEDING

GRASS TYPE	AMOUNT/ 1000 S.F.	TIME OF SEEDING	INITIAL
RYE GRAIN	1-2 LBS.	APRIL - JUNE	25 LBS. 10-10-10
BROWNTOP MILLET	1-2 LBS	JUNE - AUGUST	25 LBS 10-10-10

PERMANENT SEEDING

GRASS TYPE	AMOUNT/ 1000 S.F.	TIME OF SEEDING	INITIAL
BERMUDA, COMMON	1-2 LBS.	APRIL - JUNE	25 LBS. 10-10-10
FESCUE, TALL (KENTUCKY 31)	5-7 LBS	JUNE - AUGUST FEB. - OCT.	25 LBS 10-10-10
SERICEA LESPEDEZA (SLOPES	1-2 LBS	MARCH - APRIL	25 LBS 10-10-10

9 NOTES Not to Scale

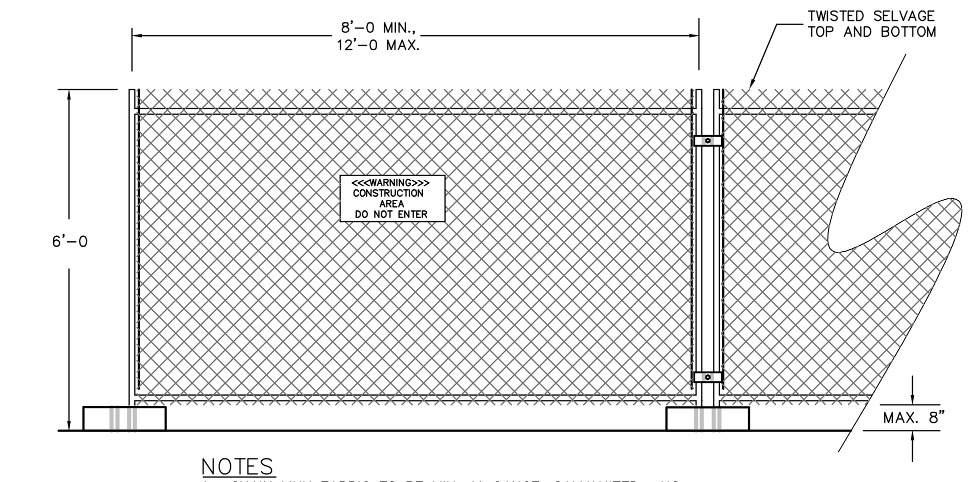

NOTES
1. CHAIN LINK FABRIC TO BE MIN. 11 GAUGE, GALVANIZED. NO RUSTED OR EXCESSIVELY MALFORMED FABRIC.
2. FENCE BASES SHALL BE OF SUFFICIENT WEIGHT and/or SPREAD TO ADEQUATELY SUPPORT EACH PANEL.
3. PANEL-TO-PANEL CONNECTIONS SHALL BE MADE AT A MIN. TWO LOCATIONS PER CONNECTION UNLESS OTHERWISE APPROVED.
4. PROVIDE CONSTRUCTION WARNING SIGNAGE 50'O.C. ALONG FENCING INSTALLATION.

7 TEMPORARY CONSTRUCTION FENCING Not to Scale

NOTE
STRUCTURAL STONE SHALL BE (CLASS "B") STONE FOR EROSION CONTROL PURPOSES. SEDIMENT CONTROL STONE SHALL BE NO. 5 OR NO. 57 STONE.

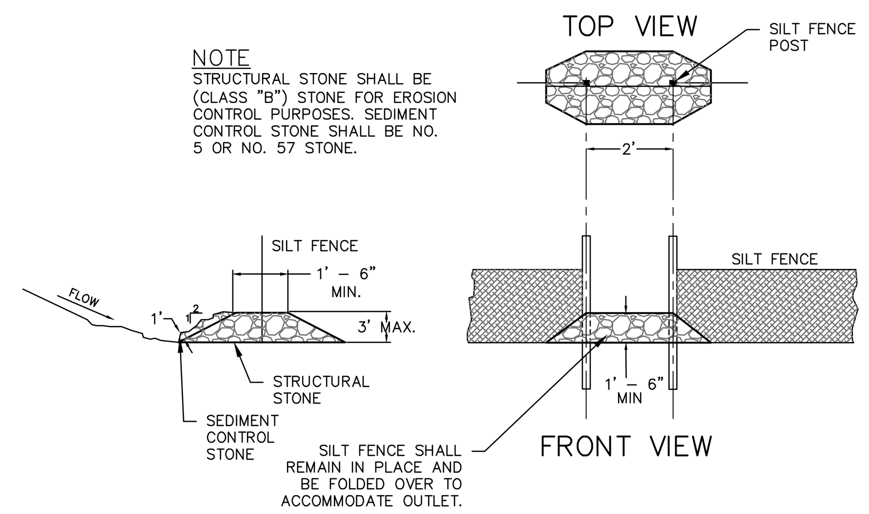

6 SILT FENCE STONE OUTLET Not to Scale

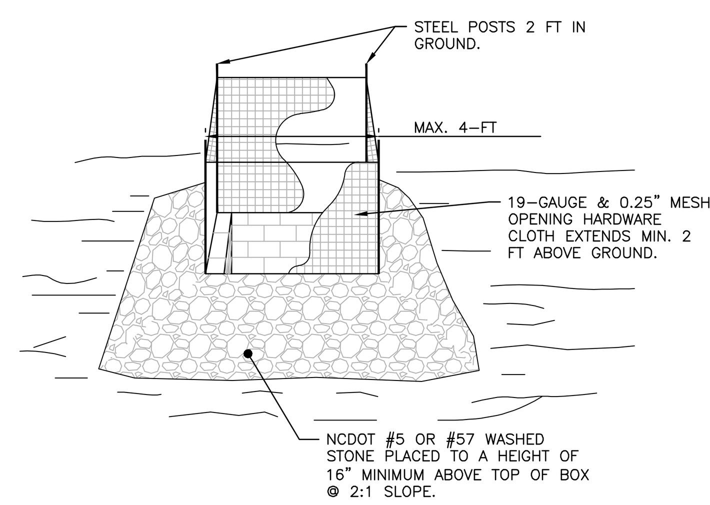

NOTES:
1. DRIVE 5-FOOT STEEL POSTS (1.25 lb/lf steel) 2 FEET INTO THE GROUND SURROUNDING THE INLET. SPACE POSTS EVENLY AROUND THE PERIMETER OF THE INLET, A MAXIMUM OF 4 FEET APART.
2. SURROUND THE POSTS WITH AT LEAST 19-GAUGE HARDWARE CLOTH WITH A 1/4-INCH MESH OPENING. SECURE THE WIRE MESH TO THE STEEL POSTS AT THE TOP, MIDDLE, AND BOTTOM FOR A MIN. 2 FEET ABOVE THE GROUND. PLACING A 2-FOOT FLAP OF THE WIRE MESH UNDER THE GRAVEL FOR ANCHORING AND REMOVAL IS RECOMMENDED.
3. UNIFORMLY GRADE A SHALLOW DEPRESSION APPROACHING THE INLET. THE TOP ELEVATION OF THE STRUCTURE MUST BE AT LEAST 12-INCHES LOWER THAN THE SURROUNDING GROUND ELEVATION DOWNSLOPE FROM THE INLET TO ENSURE THAT STORM FLOWS GET INTO THE INTENDED INLET; UNLESS OTHER SEDIMENT-CONTROL DEVICES ARE INSTALLED TO PREVENT OFF-SITE SEDIMENT-RUNOFF.

ALTERNATE MEASURE:
THE USE OF A PYRAMID SHAPED STEEL STRUCTURE OR PID CAN BE USED AS AN ALTERNATE MEASURE DEVICE. CONTACT TRIANGLE STORMWATER SOLUTIONS OR OTHER MANUFACTURERS.

5 TEMPORARY INLET PROTECTION - NCDENR STD. 6.51 Not to Scale

NOTES:
1. LAY ONE BLOCK ON EACH SIDE OF THE STRUCTURE ON ITS SIDE IN THE BOTTOM ROW TO ALLOW POOL DRAINAGE. THE FOUNDATION SHOULD BE EXCAVATED AT LEAST 2 INCHES BELOW THE CREST OF THE STORM DRAIN. PLACE THE BOTTOM ROW OF BLOCKS AGAINST THE EDGE OF THE STORM DRAIN FOR LATERAL SUPPORT AND TO AVOID WASHOUTS WHEN OVERFLOW OCCURS. IF NEEDED, GIVE LATERAL SUPPORT TO SUBSEQUENT ROWS BY PLACING 2 X 4 WOOD STUDS THROUGH BLOCK OPENINGS.
2. CAREFULLY FIT HARDWARE CLOTH OR COMPARABLE WIRE MESH WITH 1/2-INCH OPENINGS OVER ALL BLOCK OPENINGS TO HOLD GRAVEL IN PLACE.
3. USE CLEAN GRAVEL, 3/4- TO 1/2-INCH IN DIAMETER, PLACED 2 INCHES BELOW THE TOP OF THE BLOCK ON A 2:1 SLOPE OR FLATTER AND SMOOTH IT TO AN EVEN GRADE. DOT #57 WASHED STONE IS RECOMMENDED.

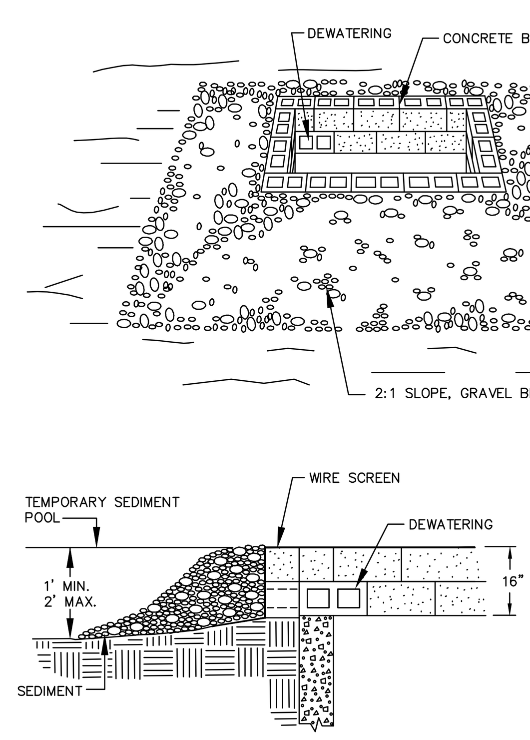

8 TEMPORARY BLOCK/GRAVEL INLET PROTECTION - NCDENR STD. 6.52 Not to Scale

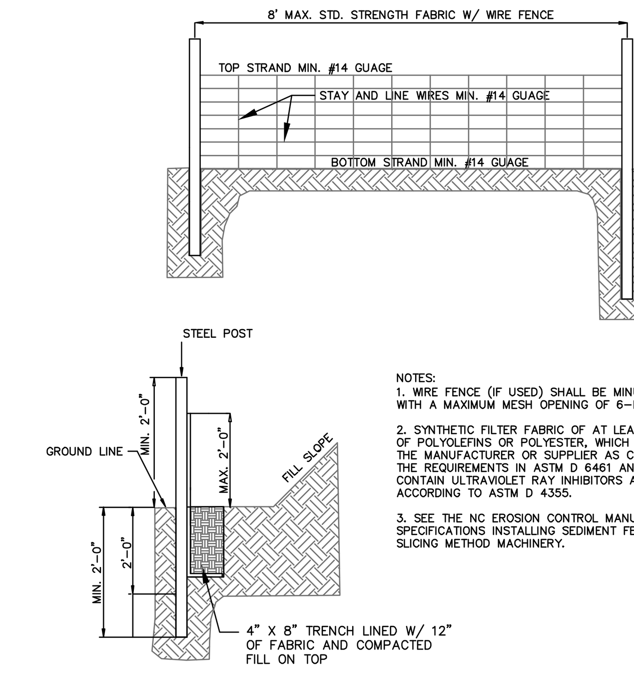

NOTES:
1. WIRE FENCE (IF USED) SHALL BE MINUMUM 14 GAUGE WITH A MAXIMUM MESH OPENING OF 6-INCHES.
2. SYNTHETIC FILTER FABRIC OF AT LEAST 95% BY WEIGHT OF POLYOLEFINS OR POLYESTER, WHICH IS CERTIFIED BY THE MANUFACTURER OR SUPPLIER AS CONFORMING TO THE REQUIREMENTS IN ASTM D 6461 AND ALSO SHOULD CONTAIN ULTRAVIOLET RAY INHIBITORS AND STABILIZERS ACCORDING TO ASTM D 4355.
3. SEE THE NC EROSION CONTROL MANUAL FOR SPECIFICATIONS INSTALLING SEDIMENT FENCE USING THE SLICING METHOD MACHINERY.

4 TEMPORARY SILT FENCE Not to Scale

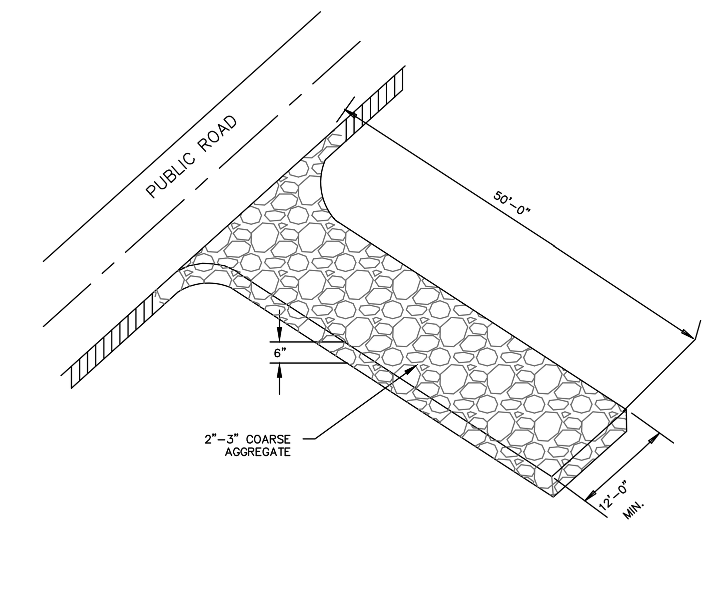

3 CONSTRUCTION ENTRANCE/EXIT - SD 13-03 Not to Scale

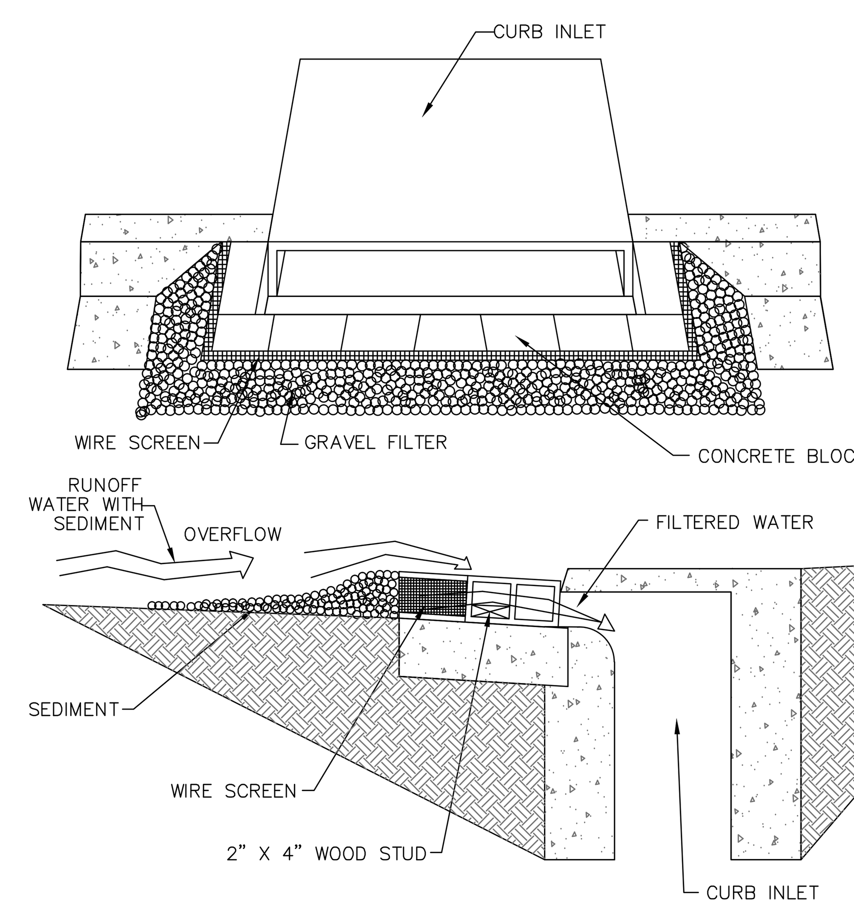

2 CURB INLET PROTECTION Not to Scale

STORMWATER MANAGEMENT PLAN
APPROVED
CITY OF WILMINGTON
ENGINEERING DEPARTMENT
DATE ________ PERMIT #_______
SIGNED_______________________

Approved Construction Plan	Name	Date
Planning		
Traffic		
Fire		

For each open utility cut of City streets, a $325 permit shall be required from the City prior to occupancy and/or project acceptance.

1 APPROVALS

DMA Architecture PLLC

380-H Knollwood Street, Suite 174
Winston-Salem, NC 27103
phone: 336-723-6360
dishnermoore.com

McKIM&CREED
243 North Front Street
Wilmington, North Carolina 28401
Phone: (910)343-1048 , Fax: (910)251-8282
www.mckimcreed.com

revisions:
A - CITY OF WILMINGTON TRC SUBMITTAL 06/29/16

RIVERPLACE
(Water Street Parking Deck Redevelopment)

Block 190, City of Wilmington
Wilmington Township
New Hanover County, NC 28412

date: 06-29-16
job no. MCE 0205-0001

© 2016 DMA Architecture PLLC

NORTH CAROLINA PROFESSIONAL SEAL 022574 ENGINEER RICHARD M. COLLIER
06/29/2016

EROSION CONTROL DETAILS

CE-501

S:\0205\0001\80-Drawings\CE501_02050001.dwg, 6/29/2016 11:59:56 AM, CNursey, 1:1

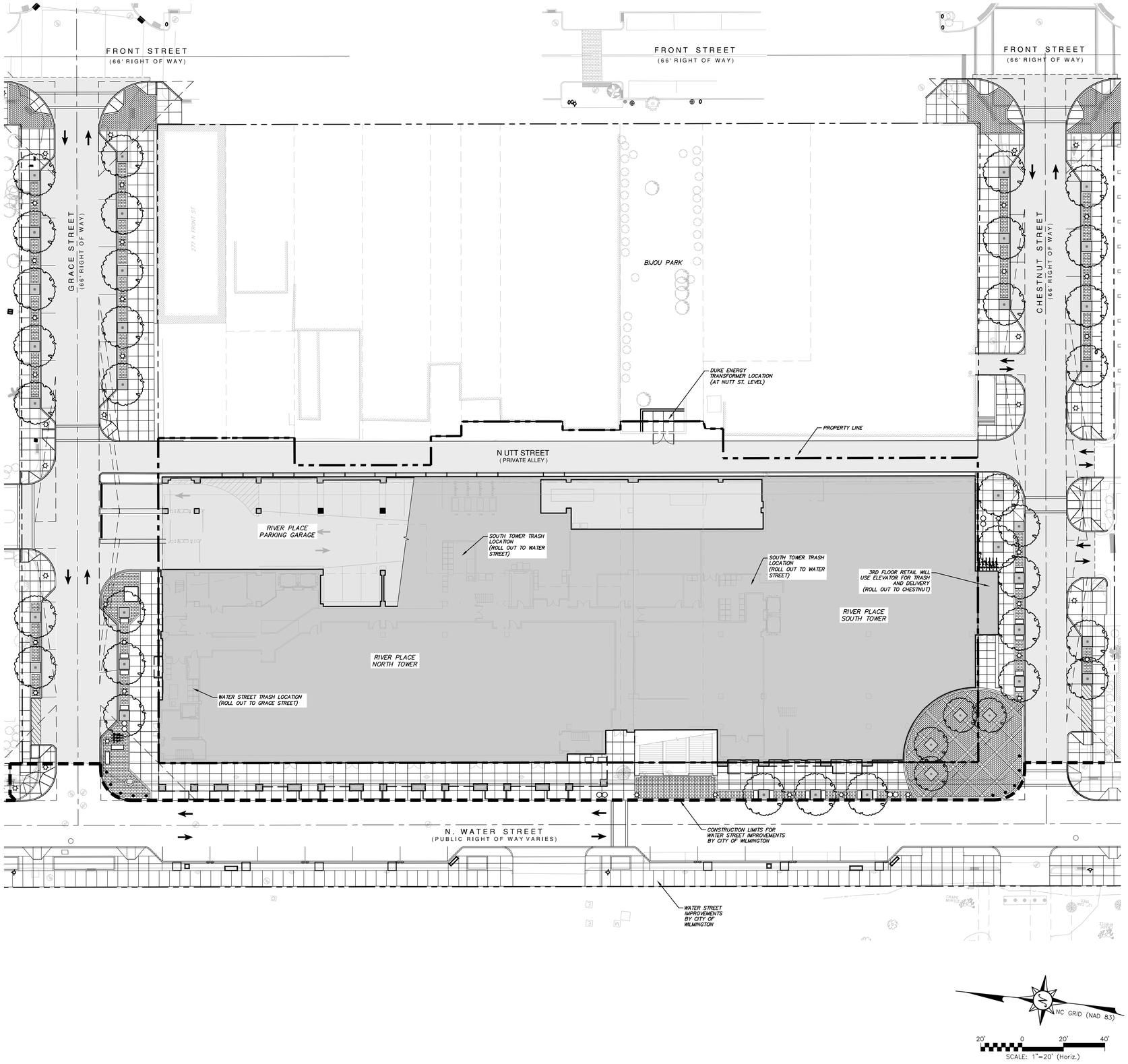

4 SITE PLAN - OVERALL

Scale: 1"=20'-0"

1. SEE SHEET G-001 FOR ADDITIONAL NOTES.
2. SEE ARCHITECTURAL DRAWINGS FOR LOCATION AND SIZE OF PROPOSED RECREATION AREAS.
3. SEE ARCHITECTURAL DRAWINGS FOR DETAILED INFORMATION REGARDING SOLID WASTE DISPOSAL.

3 NOTES

SITE DATA TABLE	RIVERPLACE	
PARCEL ADDRESSES	200 N WATER STREET	
	210 N WATER STREET	
	220 N WATER STREET	
	10 GRACE STREET	
	101 CHESTNUT STREET	
BUILDING SETBACKS	REQUIRED	PROPOSED*
FRONT (WATER STREET)	0	0
REAR (NUTT STREET)	0	0
SIDE (GRACE STREET)	0	0
SIDE (CHESTNUT STREET)	0	0
TAX PARCEL IDENTIFICATION NUMBERS:	R04720-007-026-000	
	R04720-007-027-000	
	R04720-007-029-000	
	R04720-007-001-000	
	R04720-007-025-000 (PORTION OF)	
CURRENT ZONING:	CBD-CENTRAL BUSINESS DISTRICT	
SPECIAL HIGHWAY OVERLAY DISTRICT:	NONE	
OTHER OVERLAY DISTRICTS:	NONE	
RECOMBINED PROPERTY AREA:	1.23 ACRES	
OVERALL PROJECT AREA:	2.61 ACRES	
EXISTING BUILDING SIZE	0	
BUILDING SIZE WITH SQUARE FOOTAGE (53,922/61,139 = 0.8819 OR 88.2%)	53,922 GROSS SF	
TOTAL PARCEL AREA	61,139 SF	
NC BUILDING CODE CONSTRUCTION TYPE	IA	
BUILDING LOT COVERAGE	88.2%	
NUMBER OF BUILDINGS	1 PROPOSED	
BUILDING HEIGHT	146'-6" (TO PARAPET)	
NUMBER OF STORIES AND SQUARE FEET PER FLOOR	FIRST LEVEL - 56,330 SF	
	SECOND LEVEL - 54,904 SF	
	THIRD LEVEL - 56,677 SF	
	FOURTH LEVEL - 44,538 SF	
	FIFTH LEVEL - 44,538 SF	
	SIXTH LEVEL - 44,228 SF	
	SEVENTH LEVEL - 42,743 SF	
	EIGHTH LEVEL - 25,913 SF	
	NINTH LEVEL - 25,913 SF	
	TENTH LEVEL - 25,913 SF	
	ELEVENTH LEVEL - 25,729 SF	
	TWELFTH LEVEL - 25,578 SF	
	THIRTEENTH LEVEL - 10,229 SF	
	ALL LEVELS - 483,233 SF	
ONE BEDROOM UNITS	103	
TWO BEDROOM UNITS	68	
TOTAL UNITS	171	
TOTAL AMOUNT OF DISTURBED AREA	2.56 ACRES	
EXISTING AMOUNT & PERCENT IMPERVIOUS	110,742 SF (99.5%)	
CAMA LAND USE CLASSIFICATION	URBAN	
IMPERVIOUS AREA (PROPOSED)		
ROOF TOPS	53,922	SF
PARKING/ROADWAYS	30,655	SF
SIDEWALKS/RETAINING WALLS	28,529	SF
OTHER	0	SF
FUTURE ALLOTMENT	0	SF
TOTAL S.F.	113,106	SF
PERCENTAGE:	99.79	%
TOTAL SQUARE FOOTAGE OF IMPERVIOUS SURFACES SHOWN IN THE STREET YARD:	59,184	SF
PROPOSED USE:	COMMERCIAL/RESIDENTIAL	
PARKING INFORMATION		
MINIMUM NUMBER OF SPACES REQUIRED	0	
1 SPACE PER	N/A (CBD)	
MAXIMUM NUMBER OF SPACES REQUIRED	0	
1 SPACE PER	N/A (CBD)	
SPACES PROVIDED	409 (IN DECK)	
EXISTING USE:	SURFACE PARKING/PARKING DECK	
SPACES EXISTING	340 (TO BE REMOVED)	

5 BICYCLE SPACES PER 100 SPACES SHALL BE PROVIDED (5 MIN.)

2 SITE DATA TABLE

STORMWATER MANAGEMENT PLAN
APPROVED
CITY OF WILMINGTON
ENGINEERING DEPARTMENT
DATE _____ PERMIT # _____
SIGNED _____

Approved Construction Plan

	Name	Date
Planning		
Traffic		
Fire		

For each open utility cut of City streets, a $325 permit shall be required from the City prior to occupancy and/or project acceptance.

1 APPROVALS

DMA Architecture PLLC

380-H Knollwood Street, Suite 174
Winston-Salem, NC 27103
phone: 336-723-6360
dishmermoore.com

McKIM&CREED
243 North Front Street
Wilmington, North Carolina 28401
Phone: (910)343-1048 , Fax: (910)251-8282
www.mckimcreed.com

revisions:
A - CITY OF WILMINGTON TRC SUBMITTAL 06/29/16

RIVERPLACE
(Water Street Parking Deck Redevelopment)

Block 190, City of Wilmington
Wilmington Township
New Hanover County, NC 28412

date: 06-29-16
job no. MCE 0205-0001

© 2016 DMA Architecture PLLC

NORTH CAROLINA PROFESSIONAL ENGINEER SEAL 022574 RICHARD A. POLLER
06/29/2016

OVERALL
SITE PLAN

CS-100

S:\0205\0001\00\Drawings\CS101_0205l0001.dwg, 6/29/2016 12:00:41 PM, CHarvey, 11

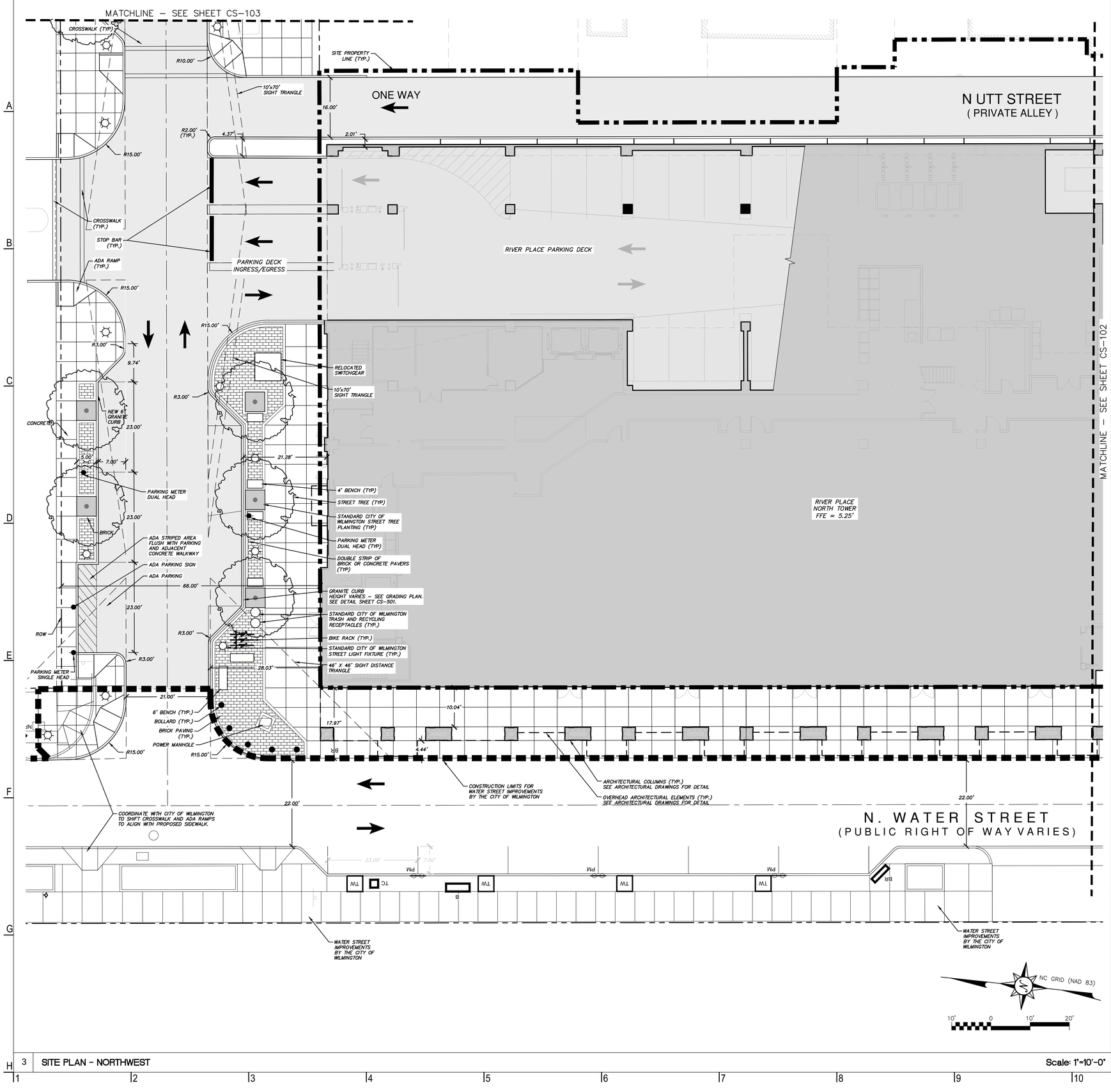

1. ARCHITECTURAL INFORMATION SHOWN FOR INFORMATIONAL PURPOSES ONLY. SEE ARCHITECTURAL DRAWINGS FOR DETAILED INFORMATION.
2. SEE SHEET G–001 FOR ADDITIONAL NOTES.

2 NOTES

STORMWATER MANAGEMENT PLAN
APPROVED
CITY OF WILMINGTON
ENGINEERING DEPARTMENT
DATE _____ PERMIT #_____
SIGNED_____

Approved Construction Plan

	Name	Date
Planning		
Traffic		
Fire		

For each open utility cut of City streets, a $325 permit shall be required from the City prior to occupancy and/or project acceptance.

3 SITE PLAN – NORTHWEST

Scale: 1"=10'–0"

1 APPROVALS

DMA Architecture PLLC
380-H Knollwood Street, Suite 174
Winston-Salem, NC 27103
phone: 336-723-6360
dishmermoore.com

McKIM&CREED
243 North Front Street
Wilmington, North Carolina 28401
Phone: (910)343-1048 , Fax: (910)251-8282
www.mckimcreed.com

revisions:
A - CITY OF WILMINGTON TRC SUBMITTAL 06/29/16

RIVERPLACE
(Water Street Parking Deck Redevelopment)
Block 190, City of Wilmington
Wilmington Township
New Hanover County, NC 28412

date: 06-29-16
job no. MCE 0205-0001

© 2016 DMA Architecture PLLC

NORTH CAROLINA PROFESSIONAL ENGINEER SEAL 022574 RICHARD M. COLLIER
06/29/2016

ENLARGED SITE PLAN (NW)

CS-101

S:\0205\0001\00-Drawings\CS\101_0205l0001.dwg, 6/29/2016 12:00:49 PM, Churkey, 11

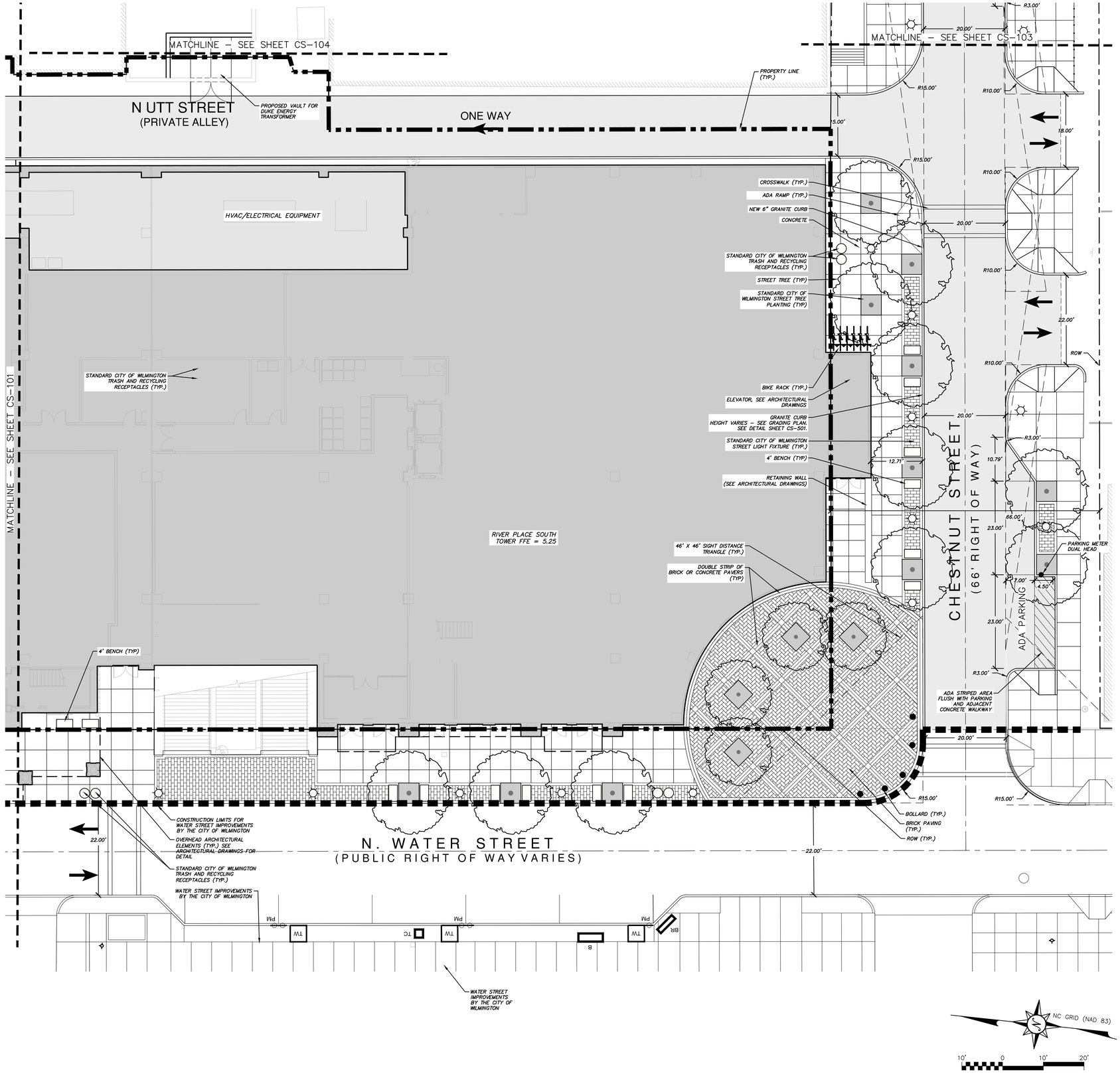

1. ARCHITECTURAL INFORMATION SHOWN FOR INFORMATIONAL PURPOSES ONLY. SEE ARCHITECTURAL DRAWINGS FOR DETAILED INFORMATION.
2. SEE SHEET G-001 FOR ADDITIONAL NOTES.

2 NOTES

STORMWATER MANAGEMENT PLAN
APPROVED
CITY OF WILMINGTON
ENGINEERING DEPARTMENT
DATE _____ PERMIT #_____
SIGNED_____

Approved Construction Plan

	Name	Date
Planning		
Traffic		
Fire		

For each open utility cut of City streets, a $325 permit shall be required from the City prior to occupancy and/or project acceptance.

3 SITE PLAN – SOUTHWEST

Scale: 1"=10'-0"

1 APPROVALS

DMA Architecture PLLC

380-H Knollwood Street, Suite 174
Winston-Salem, NC 27103
phone: 336-723-6360
dishnermoore.com

McKIM&CREED
243 North Front Street
Wilmington, North Carolina 28401
Phone: (910)343-1048 , Fax: (910)251-8282
www.mckimcreed.com

revisions:
A - CITY OF WILMINGTON TRC SUBMITTAL 06/29/16

RIVERPLACE
(Water Street Parking Deck Redevelopment)
Block 190, City of Wilmington
Wilmington Township
New Hanover County, NC 28412

date: 06-29-16
job no. MCE 0205-0001

© 2016 DMA Architecture PLLC

SEAL 022574 ENGINEER RICHARD M. COLLIER 06/29/2016

ENLARGED SITE PLAN (SW)

CS-102

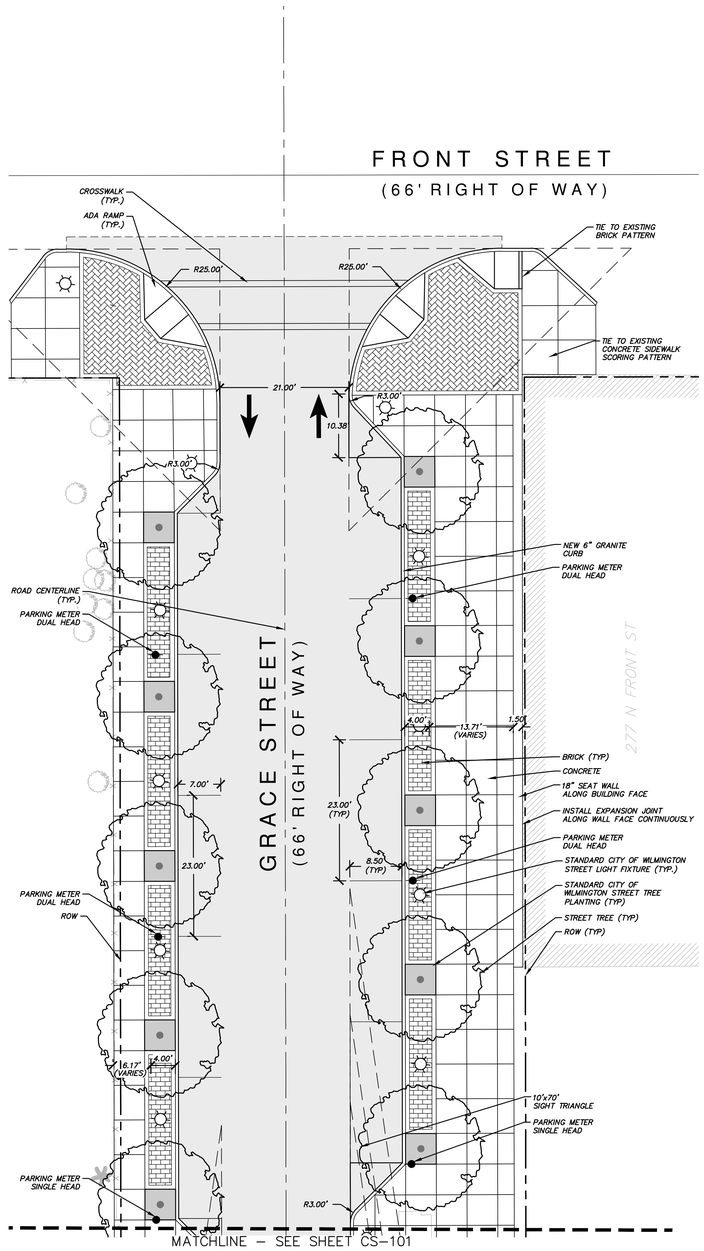

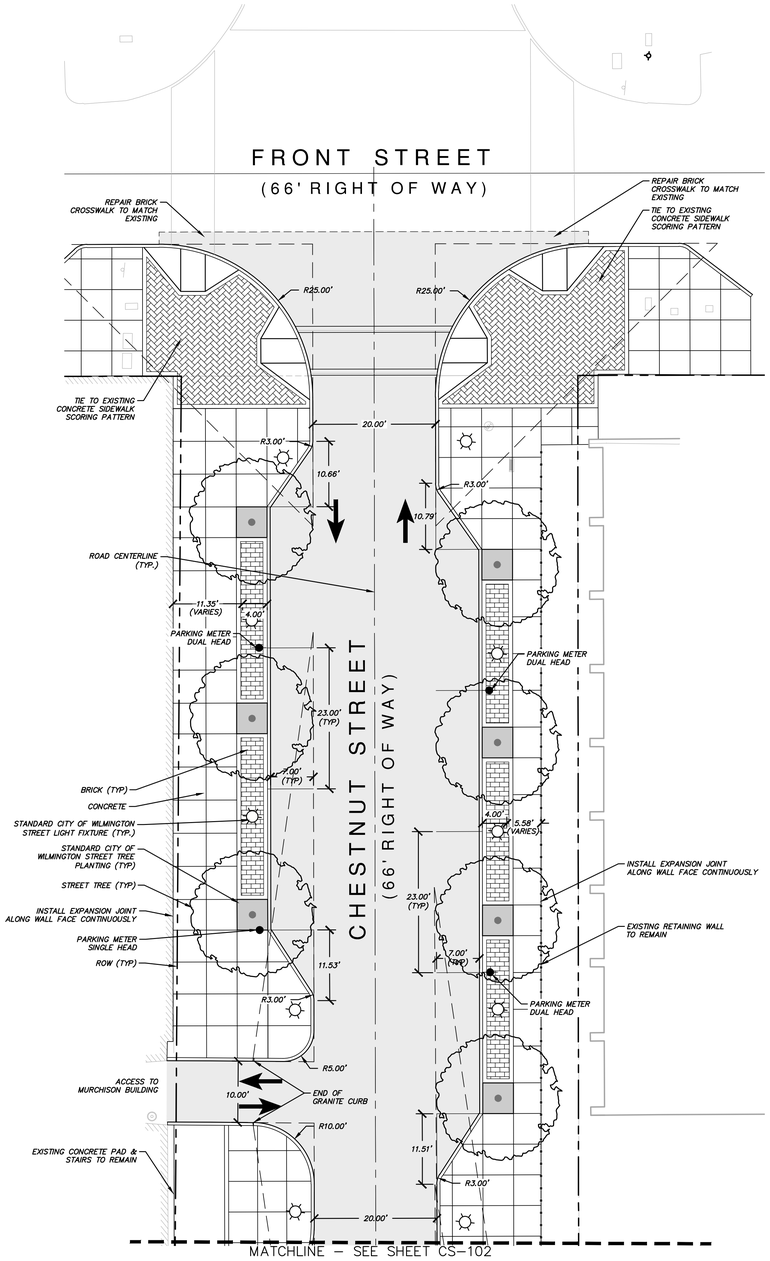

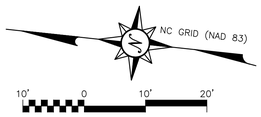

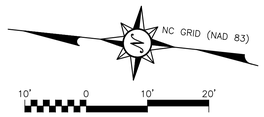

3 SITE PLAN - NORTHEAST Scale: 1"=10'-0"

2 SITE PLAN - SOUTHEAST Scale: 1"=10'-0"

1 APPROVALS

STORMWATER MANAGEMENT PLAN
APPROVED
CITY OF WILMINGTON
ENGINEERING DEPARTMENT
DATE _____ PERMIT #_____
SIGNED_____

Approved Construction Plan

	Name	Date
Planning		
Traffic		
Fire		

For each open utility cut of City streets, a $325 permit shall be required from the City prior to occupancy and/or project acceptance.

DMA Architecture PLLC

380-H Knollwood Street, Suite 174
Winston-Salem, NC 27103
phone: 336-723-6360
dishmermoore.com

McKIM&CREED
243 North Front Street
Wilmington, North Carolina 28401
Phone: (910)343-1048 , Fax: (910)251-8282
www.mckimcreed.com

revisions:
A - CITY OF WILMINGTON TRC SUBMITTAL 06/29/16

RIVERPLACE
(Water Street Parking Deck Redevelopment)
Block 190, City of Wilmington
Wilmington Township
New Hanover County, NC 28412

date: 06-29-16
job no. MCE 0205-0001

© 2016 DMA Architecture PLLC

NORTH CAROLINA PROFESSIONAL ENGINEER SEAL 022574 RICHARD M. COLLIER
06/29/2016

ENLARGED
SITE PLAN (NE&SE)

CS-103

S:\0205\0205001\05-Drawings\CS101_02050001.dwg, 6/29/2016 12:01:02 PM, CNunley, 11

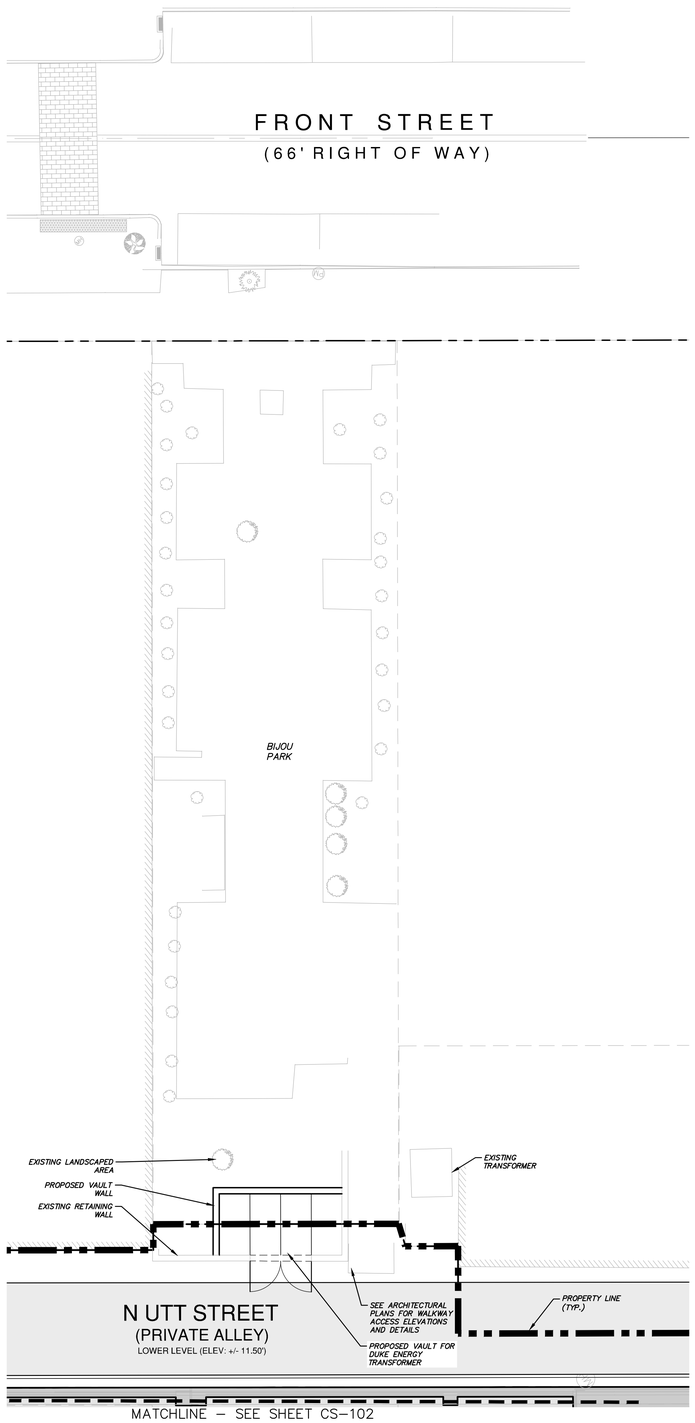

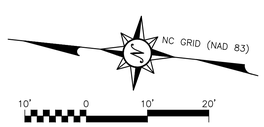

Scale: 1"=10'-0"

1. ARCHITECTURAL INFORMATION SHOWN FOR INFORMATIONAL PURPOSES ONLY. SEE ARCHITECTURAL DRAWINGS FOR DETAILED INFORMATION.
2. SEE SHEET G-001 FOR ADDITIONAL NOTES.

2 NOTES

STORMWATER MANAGEMENT PLAN
APPROVED
CITY OF WILMINGTON
ENGINEERING DEPARTMENT
DATE _____ PERMIT #_____
SIGNED_____

Approved Construction Plan

	Name	Date
Planning		
Traffic		
Fire		

For each open utility cut of City streets, a $325 permit shall be required from the City prior to occupancy and/or project acceptance.

1 APPROVALS

3 SITE PLAN - BIJOU

DMA Architecture PLLC

380-H Knollwood Street, Suite 174
Winston-Salem, NC 27103
phone: 336-723-6360
dishnermoore.com

McKIM&CREED
243 North Front Street
Wilmington, North Carolina 28401
Phone: (910)343-1048 , Fax: (910)251-8282
www.mckimcreed.com

revisions:
A - CITY OF WILMINGTON TRC SUBMITTAL 06/29/16

RIVERPLACE
(Water Street Parking Deck Redevelopment)
Block 190, City of Wilmington
Wilmington Township
New Hanover County, NC 28412

date: 06-29-16
job no. MCE 0205-0001

© 2016 DMA Architecture PLLC

NORTH CAROLINA PROFESSIONAL ENGINEER SEAL 032574 RICHARD A. POLLER
06/29/2016

ENLARGED
SITE PLAN (BIJOU PARK)

CS-104

S:\0205\0001\00\Drawings\CS101_02\0205001.dwg, 6/29/2016 12:01:11 PM, CNunley, 1:1

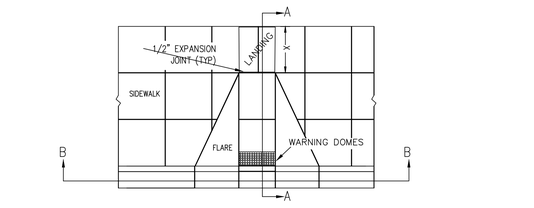

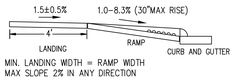

MIN. LANDING WIDTH = RAMP WIDTH
MAX SLOPE 2% IN ANY DIRECTION

SECTION A–A

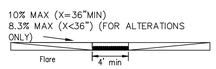

SECTION B–B

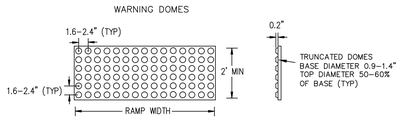

WARNING DOME NOTES:
1. USE CONTRASTING COLORS, RED OR BLACK ON WHITE PAVEMENT.
2. USE CAST IN PLACE PAVERS FOR NEW CONSTRUCTION.
3. RUBBER MATS ARE PERMITTED FOR RETROFITS.
4. LANDING AND RAMP WIDTH MAY BE REDUCED TO 3' WHERE SPACE IS LIMITED AND DESIGN IS APPROVED BY THE CITY ENGINEER.

10 | STANDARD CITY ADA RAMP (COW SD 3-07) | Not to Scale

7 | NOT USED

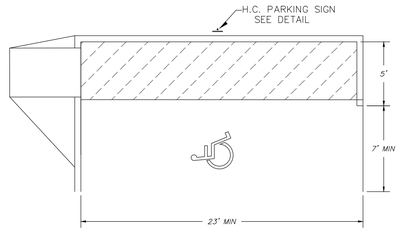

HANDICAP PARKING STALL
(WITHIN PUBLIC R/W)
NOT TO SCALE

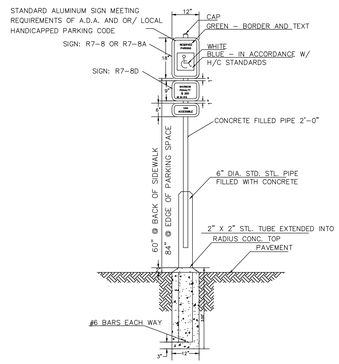

HANDICAP PARKING SIGN
NOT TO SCALE

4 | ADA PARALLEL PARKING AND SIGNAGE | Not to Scale

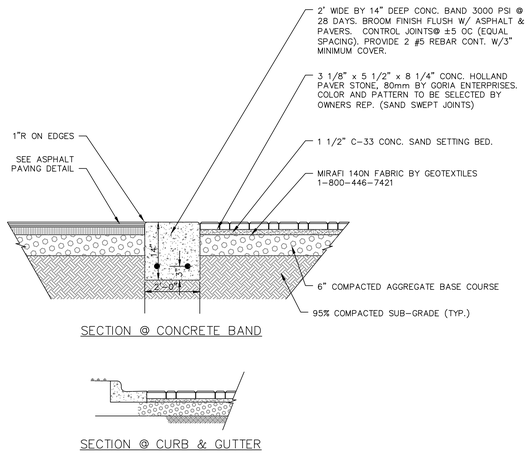

SECTION @ CONCRETE BAND

SECTION @ CURB & GUTTER

9 | BRICK PAVER CROSSWALK (COW SD 8-16) | Not to Scale

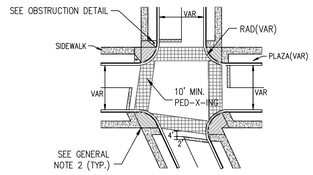

TYPICAL LOCATION OF WHEELCHAIR RAMP

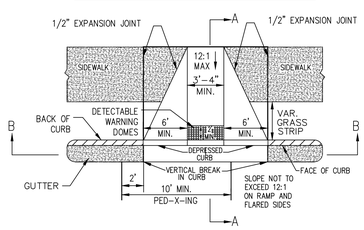

PLAN VIEW WHEELCHAIR RAMP

GUIDELINES FOR WHEELCHAIR RAMPS & DEPRESSED CURBS
SD 8-10

6 | STANDARD CITY ADA RAMP (COW SD 8-10) | Not to Scale

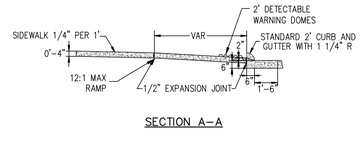

SECTION A–A

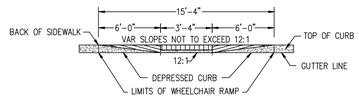

SECTION B–B

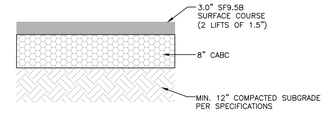

3 | ASPHALT PAVEMENT SECTION | Not to Scale

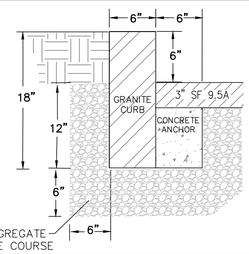

2 | CITY STANDARD GRANITE CURB (COW SD 3-11) | Not to Scale

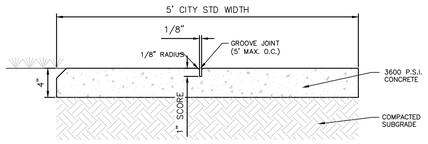

SIDEWALK ADJACENT TO GRASSED AREAS AND PLANTERS

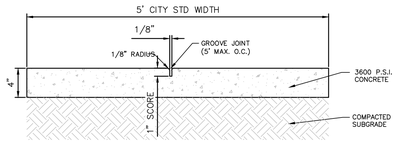

SIDEWALK ADJACENT TO PAVED AREAS

NOTES:
1. A GROOVE JOINT 1" DEEP WITH 1/8" RADII SHALL BE REQUIRED IN THE CONCRETE SIDEWALK AT 5' INTERVALS.
2. ONE 1/2" EXPANSION JOINT WILL BE REQUIRED AT 30' INTERVALS.
3. A 1/2" EXPANSION JOINT WILL BE REQUIRED WHERE THE SIDEWALK ABUTS ANY CURB AND GUTTER AND ANY RIGID STRUCTURES.
4. IN SIDEWALKS AND PLAZA AREAS EXPANSION JOINTS ARE REQUIRED AT NO GREATER THAN 30' INTERVALS.
5. CONCRETE SHALL BE 3600 PSI. IN 28 DAYS.

●●●REF. LANDSCAPE PLANS AND DETAILS FOR INTERIOR SIDEWALKS AND STREET SIDEWALK JOINT PATTERNS

8 | NOT USED

5 | CONCRETE SIDEWALK - (CITY OF WILMINGTON STANDARD SD 8-15) | Not to Scale

STORMWATER MANAGEMENT PLAN
APPROVED
CITY OF WILMINGTON
ENGINEERING DEPARTMENT
DATE _____ PERMIT #_____
SIGNED_____

Approved Construction Plan

	Name	Date
Planning		
Traffic		
Fire		

For each open utility cut of City streets, a $325 permit shall be required from the City prior to occupancy and/or project acceptance.

1 | APPROVALS

DMA Architecture PLLC
380-H Knollwood Street, Suite 174
Winston-Salem, NC 27103
phone: 336-723-6360
dishnermoore.com

MCKIM & CREED
243 North Front Street
Wilmington, North Carolina 28401
Phone: (910)343-1048 , Fax: (910)251-8282
www.mckimcreed.com

revisions:
A - CITY OF WILMINGTON TRC SUBMITTAL 06/29/16

RIVERPLACE
(Water Street Parking Deck Redevelopment)
Block 190, City of Wilmington
Wilmington Township
New Hanover County, NC 28412

date: 06-29-16
job no. MCE 0205-0001

© 2016 DMA Architecture PLLC

SITE DETAILS

CS-501

S:\0205\0001\00\Drawings\CS501_02050001.dwg, 6/29/2016 12:01:16 PM, CNancy, 11

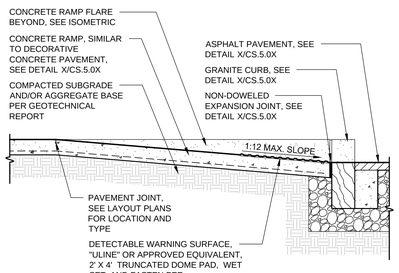

SECTION A
3/4" = 1'-0"

NOTE: MAXIMUM RAMP RISE NOT TO EXCEED 6".

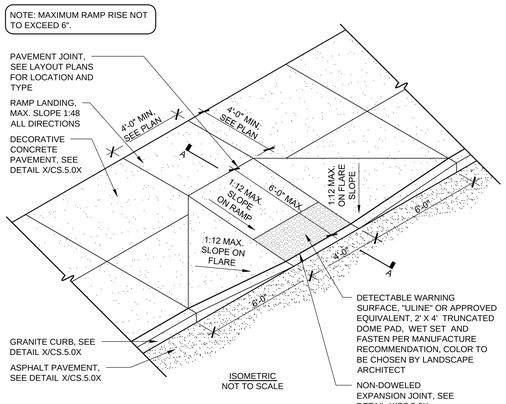

ISOMETRIC
NOT TO SCALE

7 ADA RAMP

VICTOR STANLEY
LIL-20-F
PERENNE COLLECTION
48" LENGTH
POWDER COATED STEEL- BLACK

VICTOR STANLEY
LIL-20-F
PERENNE COLLECTION
60" LENGTH
POWDER COATED STEEL- BLACK

8 PROJECT BENCH

VICTOR STANLEY
C-10
CLASSIC COLLECTION
6' LENGTH
POWDER COATED DUCTILE IRON ENDS - BLACK
RECYCLED PLASTIC BENCH SLATS - GREY

7 CITY STANDARD BENCH

VICTOR STANLEY
BRBS-103
CYCLE SENTRY COLLECTION
BOLLARD STYLE
POWDER COATED TUBULAR STEEL- BLACK

RELIANCE FOUNDRY
34" HIGH DECORATIVE BOLLARD
R-7576
POWDER COATED DUCTILE IRON
POWDER COATED - BLACK

4 BOLLARD

VICTOR STANLEY
STEEL SITES SERIES
SDC-36
36-GALLON SIDE DOOR OPENING
LITTER & RECYCLE RECEPTACLES
WITH SIDE ACCESS & KEYED LOCK BOX
POWDER COATED STEEL- BLACK

6 TRASH + RECYCLING RECEPTACLE

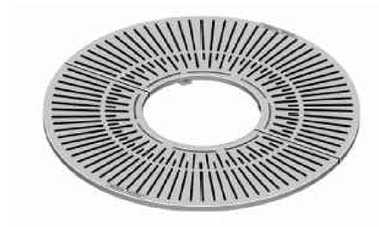

NEENAH ENTERPRISES, INC
METROPOLITAN COLLECTION
R-8830-A1
48" ROUND TREE GRATE
CAST IRON

3 ROUND TREE GRATE

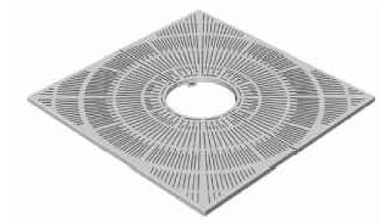

NEENAH ENTERPRISES, INC
METROPOLITAN COLLECTION
R-8707
60" SQUARE TREE GRATE
CAST IRON

2 SQUARE TREE GRATE

STORMWATER MANAGEMENT PLAN
APPROVED
CITY OF WILMINGTON
ENGINEERING DEPARTMENT
DATE _____ PERMIT #_____
SIGNED_____

Approved Construction Plan

	Name	Date
Planning		
Traffic		
Fire		

For each open utility cut of City streets, a $325 permit shall be required from the City prior to occupancy and/or project acceptance.

1 APPROVALS

DMA Architecture PLLC
380-H Knollwood Street, Suite 174
Winston-Salem, NC 27103
phone: 336-723-6360
dishnermoore.com

McKIM&CREED
243 North Front Street
Wilmington, North Carolina 28401
Phone: (910)343-1048 , Fax: (910)251-8282
www.mckimcreed.com

revisions:
A - CITY OF WILMINGTON TRC SUBMITTAL 06/29/16

RIVERPLACE
(Water Street Parking Deck Redevelopment)
Block 190, City of Wilmington
Wilmington Township
New Hanover County, NC 28412

date: 06-29-16
job no. MCE 0205-0001

© 2016 DMA Architecture PLLC

STREETSCAPE DETAILS

CS-502

S:\0205\0001\00-Drawings\CS\01_02050001.dwg, 6/29/2016 12:01:13 PM, Chansley, 11

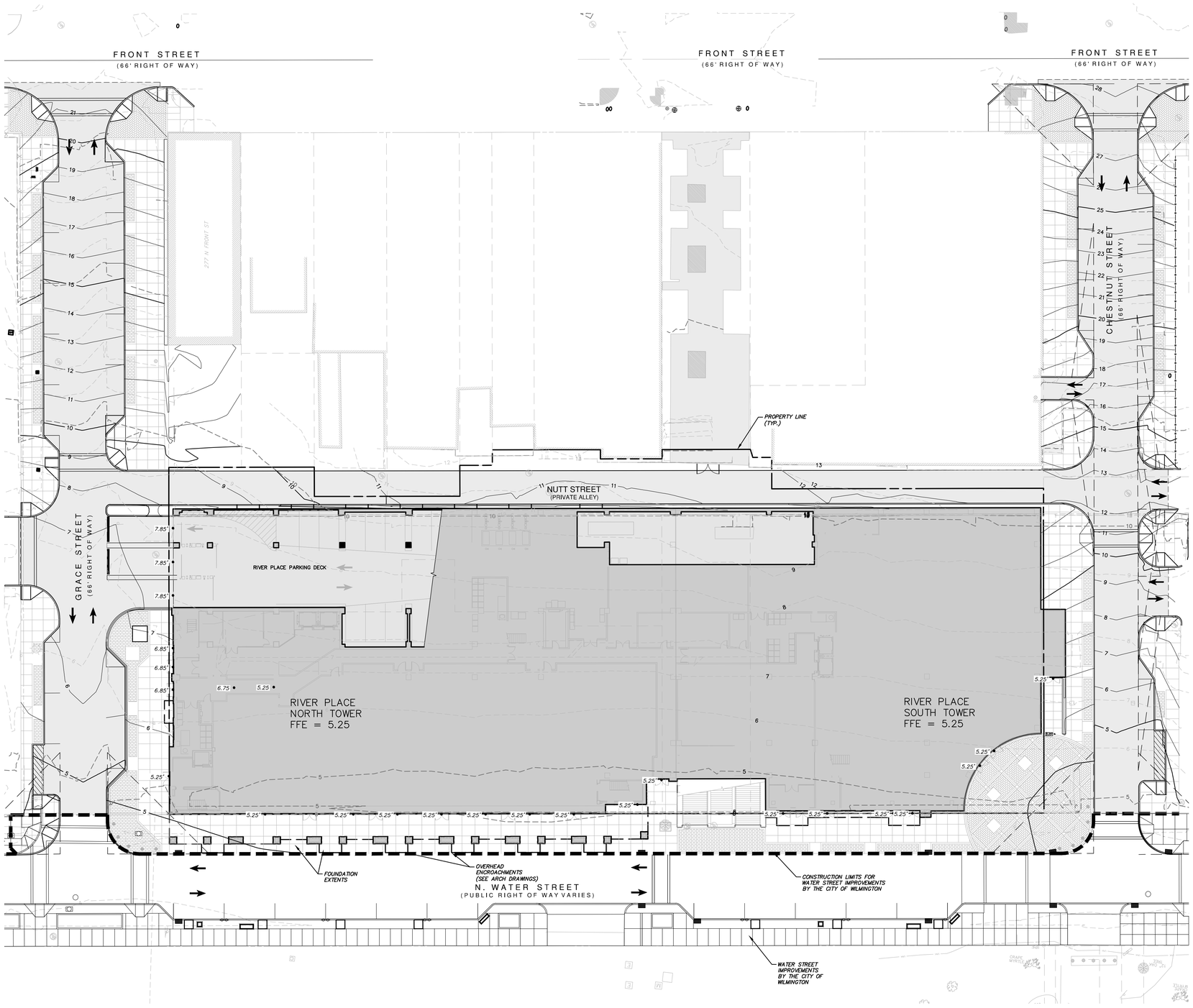

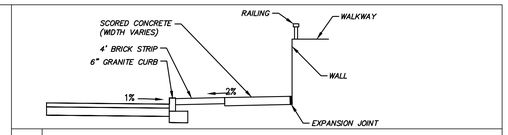

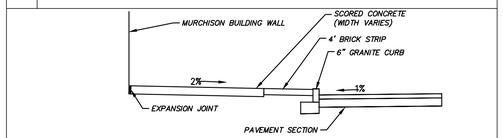

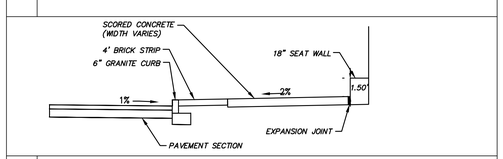

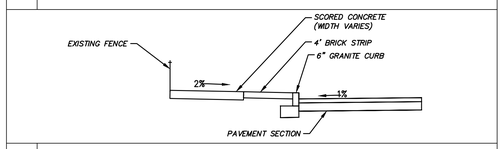

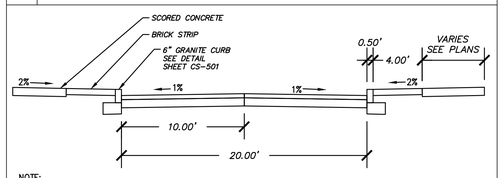

NOTE:
SECTION SHOWS DRIVE AISLE ONLY. EXTEND PAVEMENT SECTION AT 1% CROSS SLOPE AS NEEDED FOR AREAS WITH PARKING.

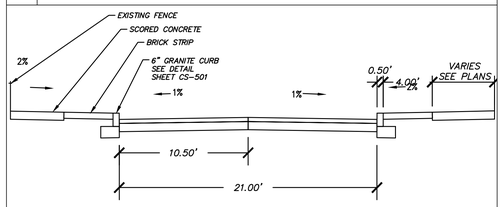

NOTE:
SECTION SHOWS DRIVE AISLE ONLY. EXTEND PAVEMENT SECTION AT 1% CROSS SLOPE AS NEEDED FOR AREAS WITH PARKING.

1. ARCHITECTURAL INFORMATION SHOWN FOR INFORMATIONAL PURPOSES ONLY. SEE ARCHITECTURAL DRAWINGS FOR DETAILED INFORMATION.
2. FOUNDATION INFORMATION SHOWN FOR INFORMATIONAL PURPOSES ONLY. SEE FOUNDATION DRAWINGS FOR DETAILED INFORMATION.
3. ALL HARDSCAPE MUST MEET ADA STANDARDS.
4. ADA ACCESSIBLE RAMPS AND ASSOCIATED CROSSWALKS ARE REQUIRED AT ALL STREET INTERSECTIONS.
5. NEW PAVEMENT CROSS SECTION WILL BE 8" ABC WITH 3" SF9.5A. MILL EXISTING PAVEMENT 2" AND OVERLAY WITH 2" SF9.5A.
6. NEW CURB TO BE 6" GRANITE CURB TO MEET CITY TECHNICAL STANDARD DETAIL SD 3-11.
7. NEW CONCRETE SIDEWALK TO BE 4" THICK, 3000 PSI.

DMA Architecture PLLC

380-H Knollwood Street, Suite 174
Winston-Salem, NC 27103
phone: 336-723-6360
dishnermoore.com

McKIM&CREED
243 North Front Street
Wilmington, North Carolina 28401
Phone: (910)343-1048 , Fax: (910)251-8282
www.mckimcreed.com

revisions:
A - CITY OF WILMINGTON TRC SUBMITTAL 06/29/16

RIVERPLACE
(Water Street Parking Deck Redevelopment)

Block 190, City of Wilmington
Wilmington Township
New Hanover County, NC 28412

date: 06-29-16
job no. MCE 0205-0001

© 2016 DMA Architecture PLLC

NORTH CAROLINA PROFESSIONAL ENGINEER SEAL 022574 RICHARD M. COLLIER
06/29/2016

OVERALL
GRADING PLAN

CG-100

S:\0205\0001\80-Drawings\CG101_02050001.dwg, 6/29/2016 12:02:09 PM, Charley, 11

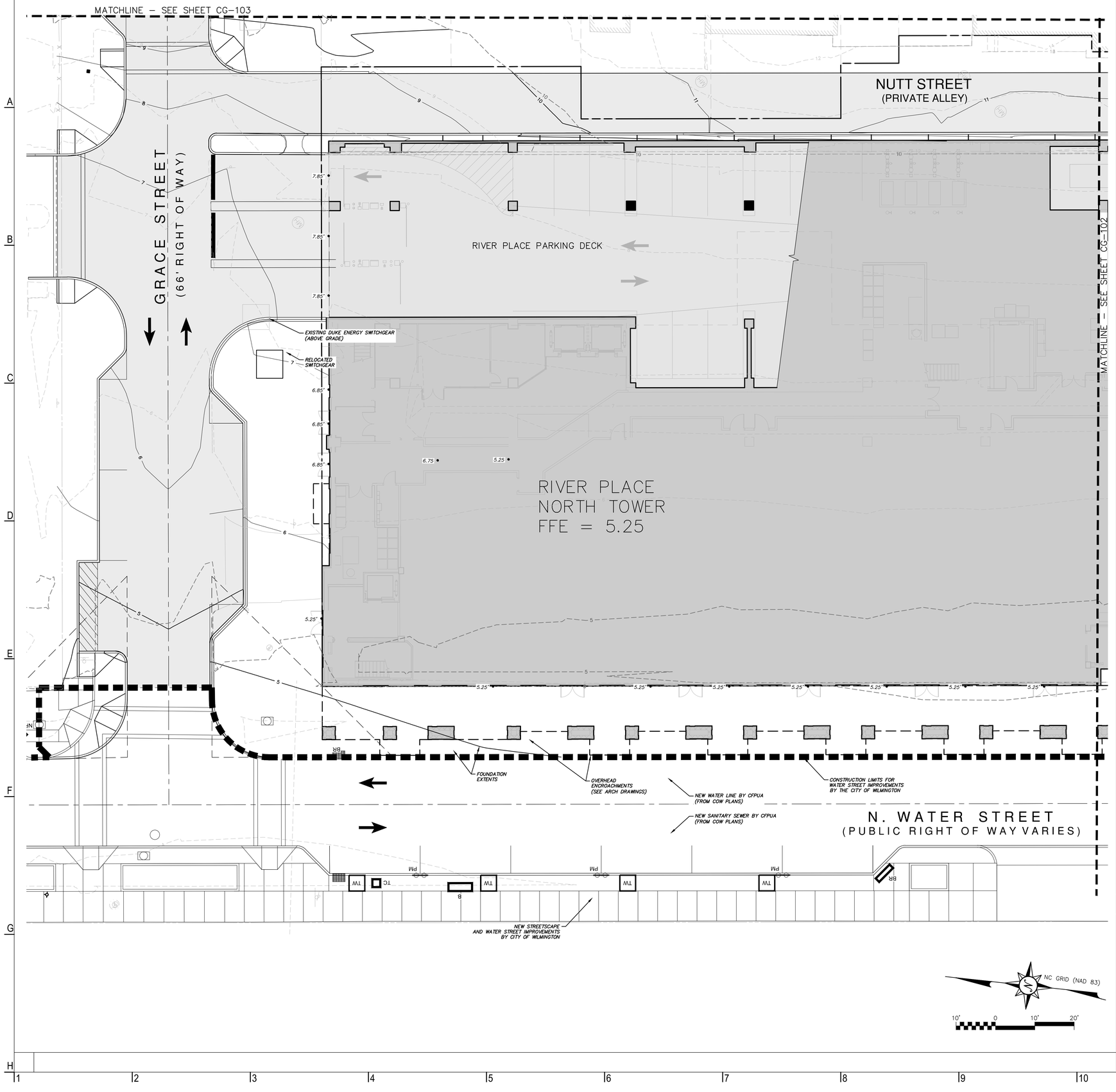

1. ARCHITECTURAL INFORMATION SHOWN FOR INFORMATIONAL PURPOSES ONLY. SEE ARCHITECTURAL DRAWINGS FOR DETAILED INFORMATION.
2. FOUNDATION INFORMATION SHOWN FOR INFORMATIONAL PURPOSES ONLY. SEE FOUNDATION DRAWINGS FOR DETAILED INFORMATION.

DMA Architecture PLLC

380-H Knollwood Street, Suite 174
Winston-Salem, NC 27103
phone: 336-723-6360
dishnermoore.com

McKIM&CREED
243 North Front Street
Wilmington, North Carolina 28401
Phone: (910)343-1048 , Fax: (910)251-8282
www.mckimcreed.com

revisions:
A - CITY OF WILMINGTON TRC SUBMITTAL 06/29/16

RIVERPLACE
(Water Street Parking Deck Redevelopment)

Block 190, City of Wilmington
Wilmington Township
New Hanover County, NC 28412

date: 06-29-16
job no. MCE 0205-0001

© 2016 DMA Architecture PLLC

NORTH CAROLINA PROFESSIONAL ENGINEER SEAL 022574 RICHARD M. COLLIER
06/29/2016

ENLARGED
GRADING PLAN (NW)

CG-101

J:\0205\0500\0001\Drawings\CG101_0205001.dwg, 6/29/2016 12:02:18 PM, CNorthy, 1:1

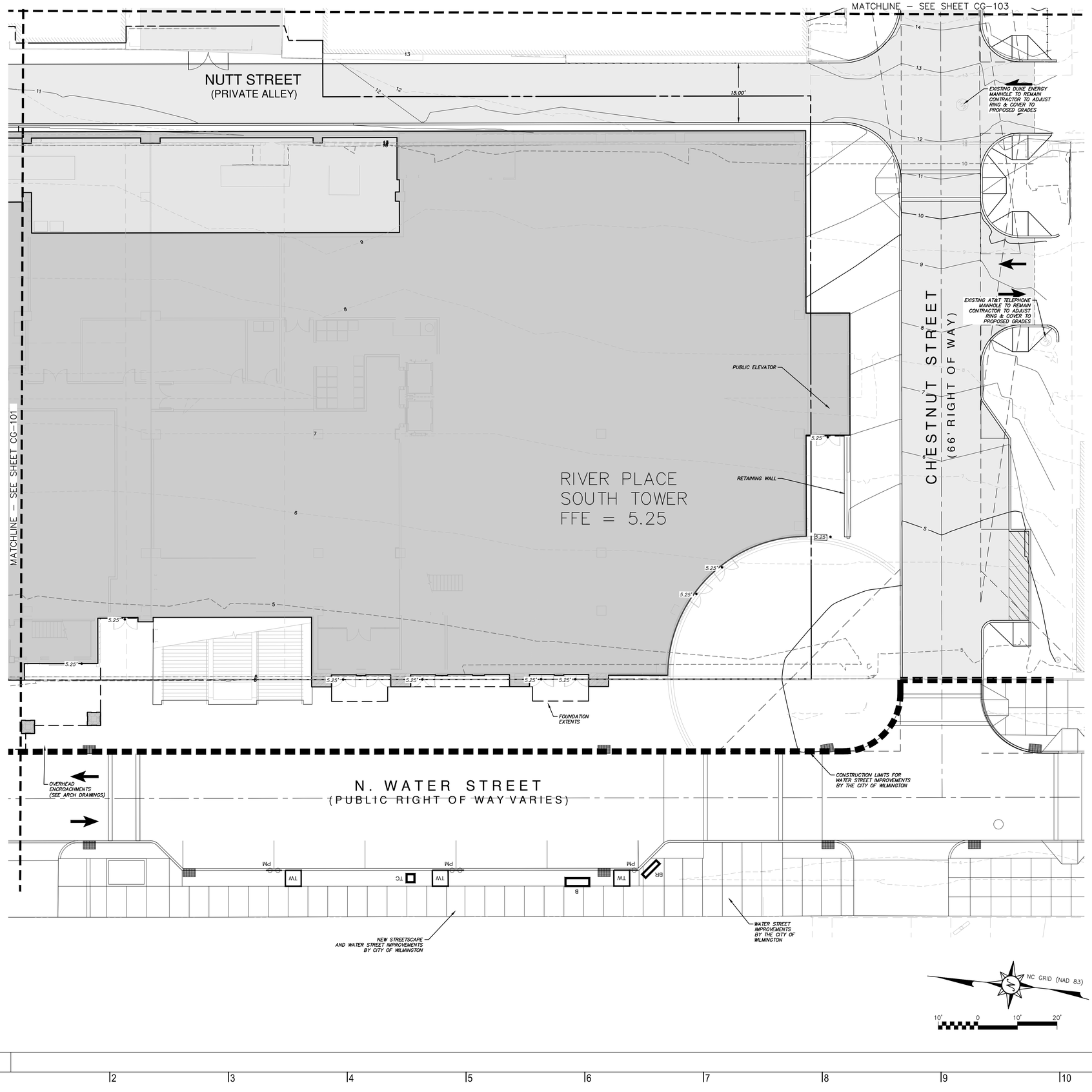

1. ARCHITECTURAL INFORMATION SHOWN FOR INFORMATIONAL PURPOSES ONLY. SEE ARCHITECTURAL DRAWINGS FOR DETAILED INFORMATION.
2. FOUNDATION INFORMATION SHOWN FOR INFORMATIONAL PURPOSES ONLY. SEE FOUNDATION DRAWINGS FOR DETAILED INFORMATION.

DMA Architecture PLLC
380-H Knollwood Street, Suite 174
Winston-Salem, NC 27103
phone: 336-723-6360
dishmermoore.com

McKIM&CREED
243 North Front Street
Wilmington, North Carolina 28401
Phone: (910)343-1048 , Fax: (910)251-8282
www.mckimcreed.com

revisions:
A - CITY OF WILMINGTON TRC SUBMITTAL 06/29/16

RIVERPLACE
(Water Street Parking Deck Redevelopment)

Block 190, City of Wilmington
Wilmington Township
New Hanover County, NC 28412

date: 06-29-16
job no. MCE 0205-0001

© 2016 DMA Architecture PLLC

NORTH CAROLINA PROFESSIONAL ENGINEER SEAL 022574 RICHARD M. COLLIER
06/29/2016

ENLARGED
GRADING PLAN (SW)

CG-102

S:\0205\0205001\05-Drawings\CG\01_0205001.dwg, 6/29/2016 12:02:24 PM, CNunley, 1:1

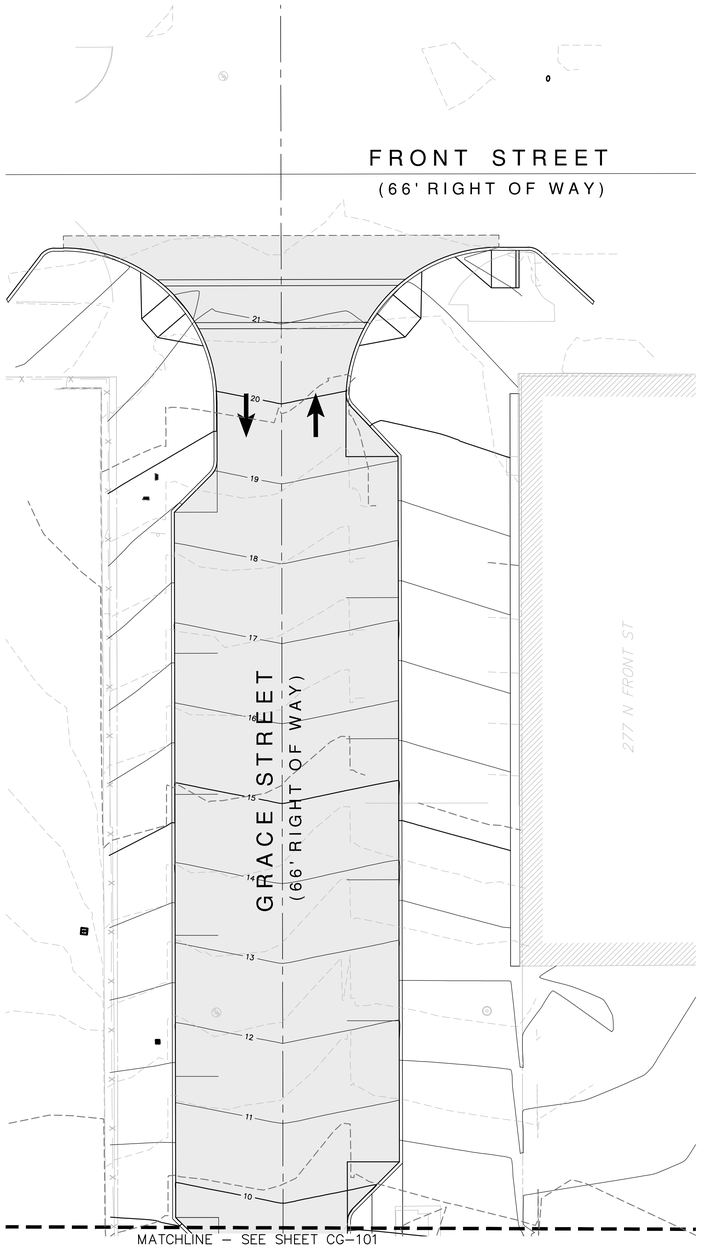

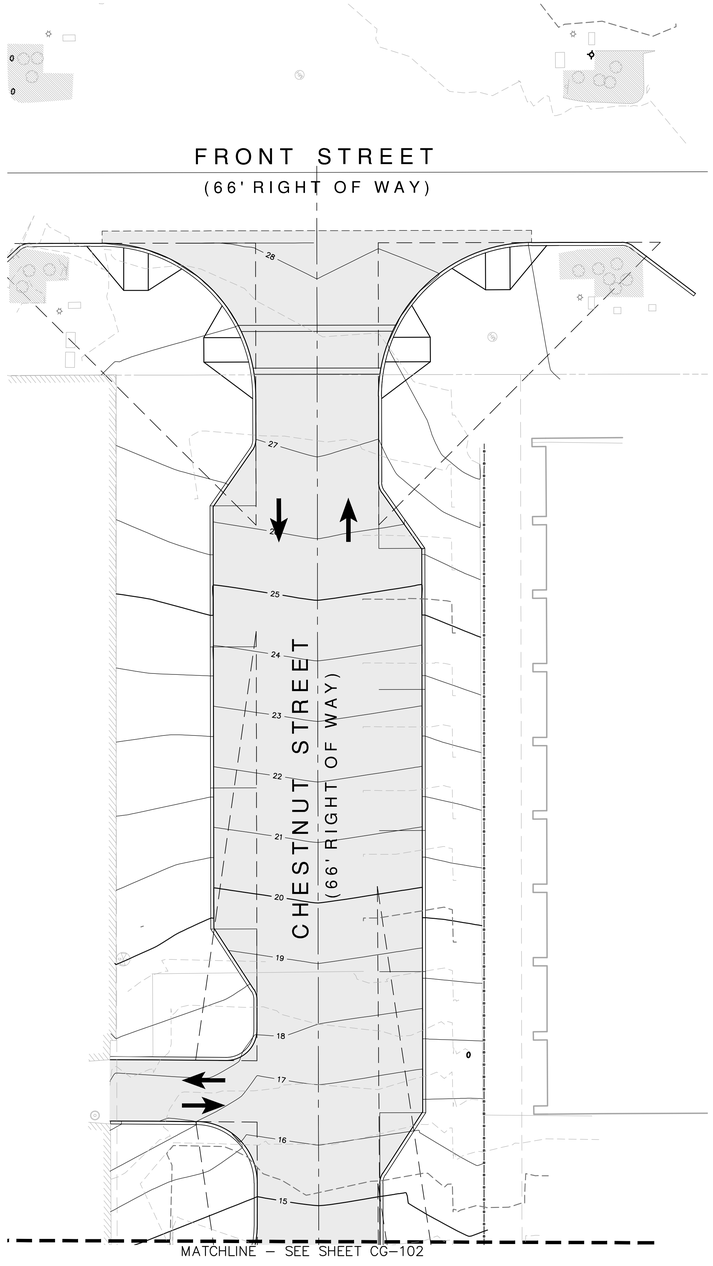

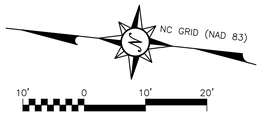

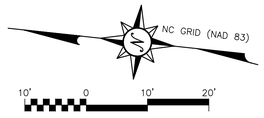

1. ARCHITECTURAL INFORMATION SHOWN FOR INFORMATIONAL PURPOSES ONLY. SEE ARCHITECTURAL DRAWINGS FOR DETAILED INFORMATION.
2. FOUNDATION INFORMATION SHOWN FOR INFORMATIONAL PURPOSES ONLY. SEE FOUNDATION DRAWINGS FOR DETAILED INFORMATION.

DMA Architecture PLLC

380-H Knollwood Street, Suite 174
Winston-Salem, NC 27103
phone: 336-723-6360
dishnermoore.com

McKIM&CREED
243 North Front Street
Wilmington, North Carolina 28401
Phone: (910)343-1048 , Fax: (910)251-8282
www.mckimcreed.com

revisions:
A - CITY OF WILMINGTON TRC SUBMITTAL 06/29/16

RIVERPLACE
(Water Street Parking Deck Redevelopment)
Block 190, City of Wilmington
Wilmington Township
New Hanover County, NC 28412

date: 06-29-16
job no. MCE 0205-0001

© 2016 DMA Architecture PLLC

ENLARGED
GRADING PLAN (NE&SE)

CG-103

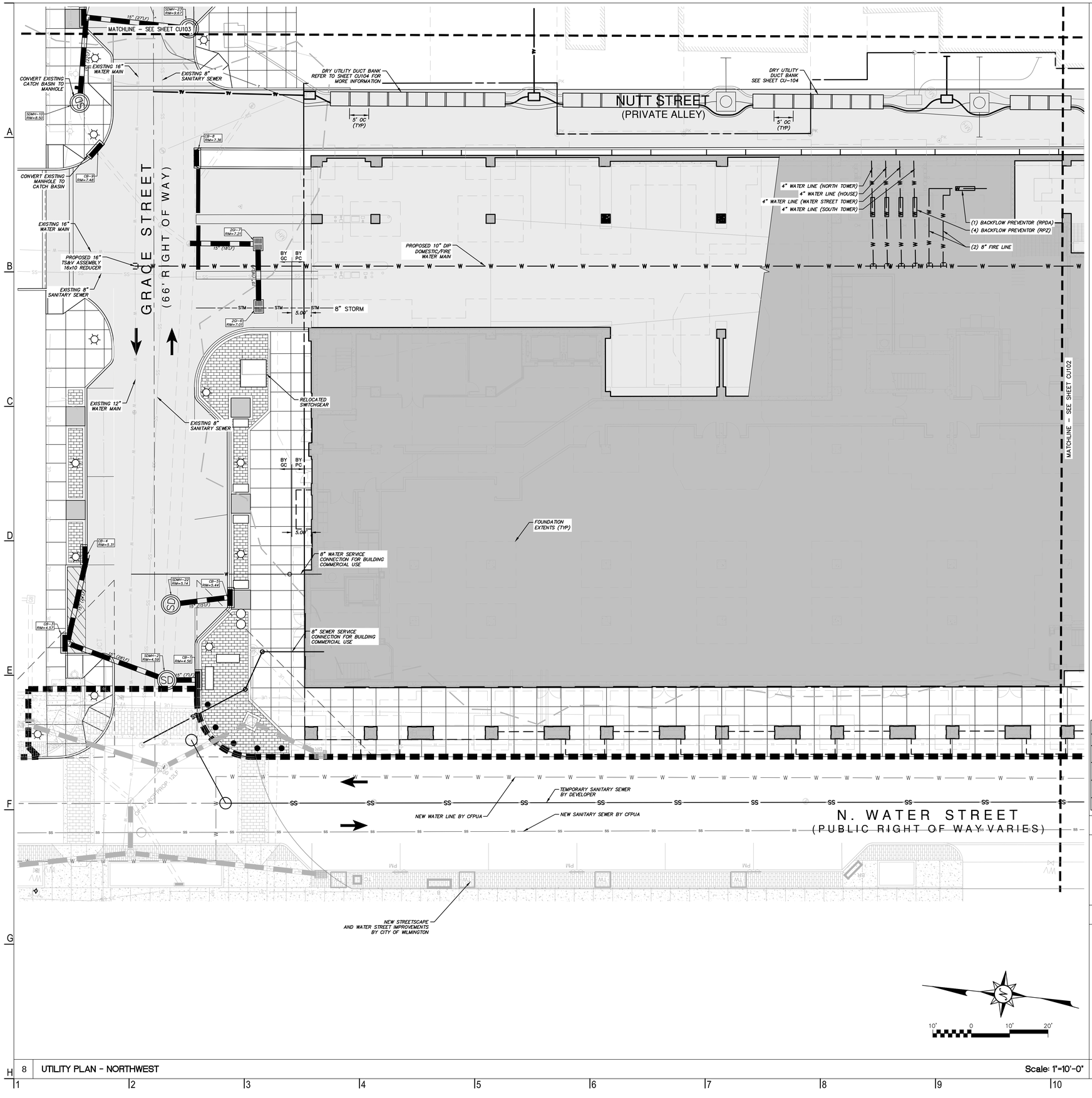

ESTIMATED WATER & SANITARY DEMAND			
PROPOSED USE	EXISTING FLOW (GPD)	REQUIREMENT	FLOW (GAL)
RETAIL (33,990 SF)	0 (SURFACE PARKING)	100 GALLONS/1000 SF	3,399
1–BEDROOM APARTMENT (103 UNITS)	0 (SURFACE PARKING)	360 GALLONS/UNIT	37,080
2–BEDROOM APARTMENT (68 UNITS)	0 (SURFACE PARKING)	360 GALLONS/UNIT	24,480
		TOTAL =	64,959

3 WATER AND SANITARY DEMAND TABLE

1. ARCHITECTURAL INFORMATION SHOWN FOR INFORMATIONAL PURPOSES ONLY. SEE ARCHITECTURAL DRAWINGS FOR DETAILED INFORMATION.
2. FOUNDATION INFORMATION SHOWN FOR INFORMATIONAL PURPOSES ONLY. SEE FOUNDATION DRAWINGS FOR DETAILED INFORMATION.
3. SEE SHEET G–001 FOR ADDITIONAL NOTES.

2 NOTES

STORMWATER MANAGEMENT PLAN
APPROVED
CITY OF WILMINGTON
ENGINEERING DEPARTMENT
DATE _____ PERMIT #_____
SIGNED_____

Approved Construction Plan

	Name	Date
Planning		
Traffic		
Fire		

For each open utility cut of City streets, a $325 permit shall be required from the City prior to occupancy and/or project acceptance.

8 UTILITY PLAN – NORTHWEST

Scale: 1"=10'-0"

1 APPROVALS

DMA Architecture PLLC
380-H Knollwood Street, Suite 174
Winston-Salem, NC 27103
phone: 336-723-6360
dishermoore.com

McKIM & CREED
243 North Front Street
Wilmington, North Carolina 28401
Phone: (910)343-1048 , Fax: (910)251-8282
www.mckimcreed.com

revisions:
A - CITY OF WILMINGTON TRC SUBMITTAL 06/29/16

RIVERPLACE
(Water Street Parking Deck Redevelopment)
Block 190, City of Wilmington
Wilmington Township
New Hanover County, NC 28412

date: 06-29-16
job no. MCE 0205-0001

© 2016 DMA Architecture PLLC

NORTH CAROLINA PROFESSIONAL ENGINEER SEAL 022574 RICHARD M. COLLIER
06/29/2016

ENLARGED UTILITY PLAN (NW)

CU-101

S:\0205\0001\80-Drawings\CU101_02050001.dwg 6/29/2016 12:03:34 PM, CNunley, 1:1

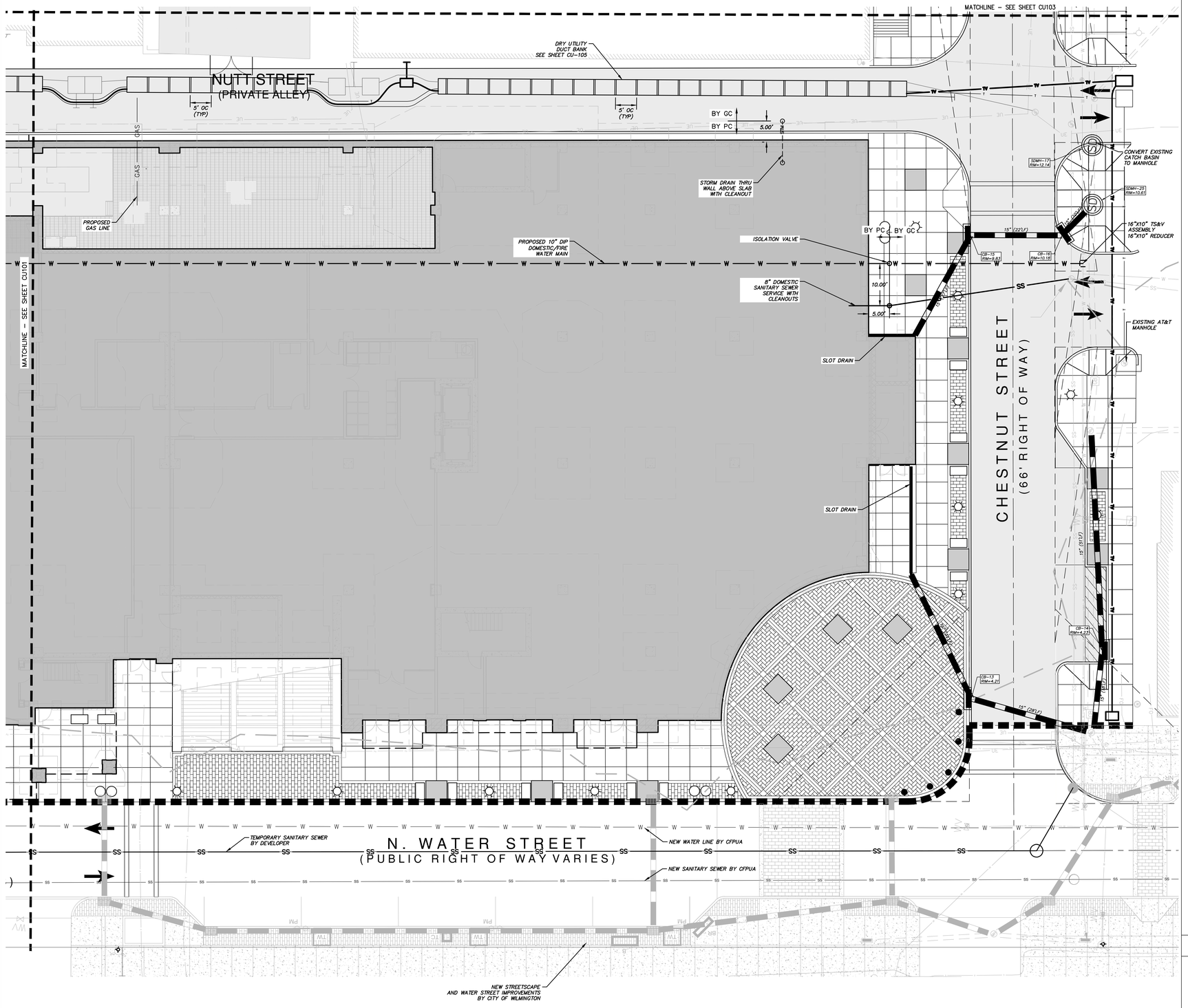

1. ARCHITECTURAL INFORMATION SHOWN FOR INFORMATIONAL PURPOSES ONLY. SEE ARCHITECTURAL DRAWINGS FOR DETAILED INFORMATION.
2. FOUNDATION INFORMATION SHOWN FOR INFORMATIONAL PURPOSES ONLY. SEE FOUNDATION DRAWINGS FOR DETAILED INFORMATION.
3. SEE SHEET G-001 FOR ADDITIONAL NOTES.

2 NOTES

STORMWATER MANAGEMENT PLAN
APPROVED
CITY OF WILMINGTON
ENGINEERING DEPARTMENT
DATE _____ PERMIT #_____
SIGNED_____

Approved Construction Plan

	Name	Date
Planning		
Traffic		
Fire		

For each open utility cut of City streets, a $325 permit shall be required from the City prior to occupancy and/or project acceptance.

7 UTILITY PLAN - SOUTHWEST

Scale: 1"=10'-0"

1 APPROVALS

DMA Architecture PLLC

380-H Knollwood Street, Suite 174
Winston-Salem, NC 27103
phone: 336-723-6360
dishnermoore.com

McKIM&CREED
243 North Front Street
Wilmington, North Carolina 28401
Phone: (910)343-1048 , Fax: (910)251-8282
www.mckimcreed.com

revisions:
A - CITY OF WILMINGTON TRC SUBMITTAL 06/29/16

RIVERPLACE
(Water Street Parking Deck Redevelopment)
Block 190, City of Wilmington
Wilmington Township
New Hanover County, NC 28412

date: 06-29-16
job no. MCE 0205-0001

© 2016 DMA Architecture PLLC

NORTH CAROLINA PROFESSIONAL SEAL 022574 ENGINEER RICHARD M. COLLIER
06/29/2016

ENLARGED UTILITY PLAN (SW)

CU-102

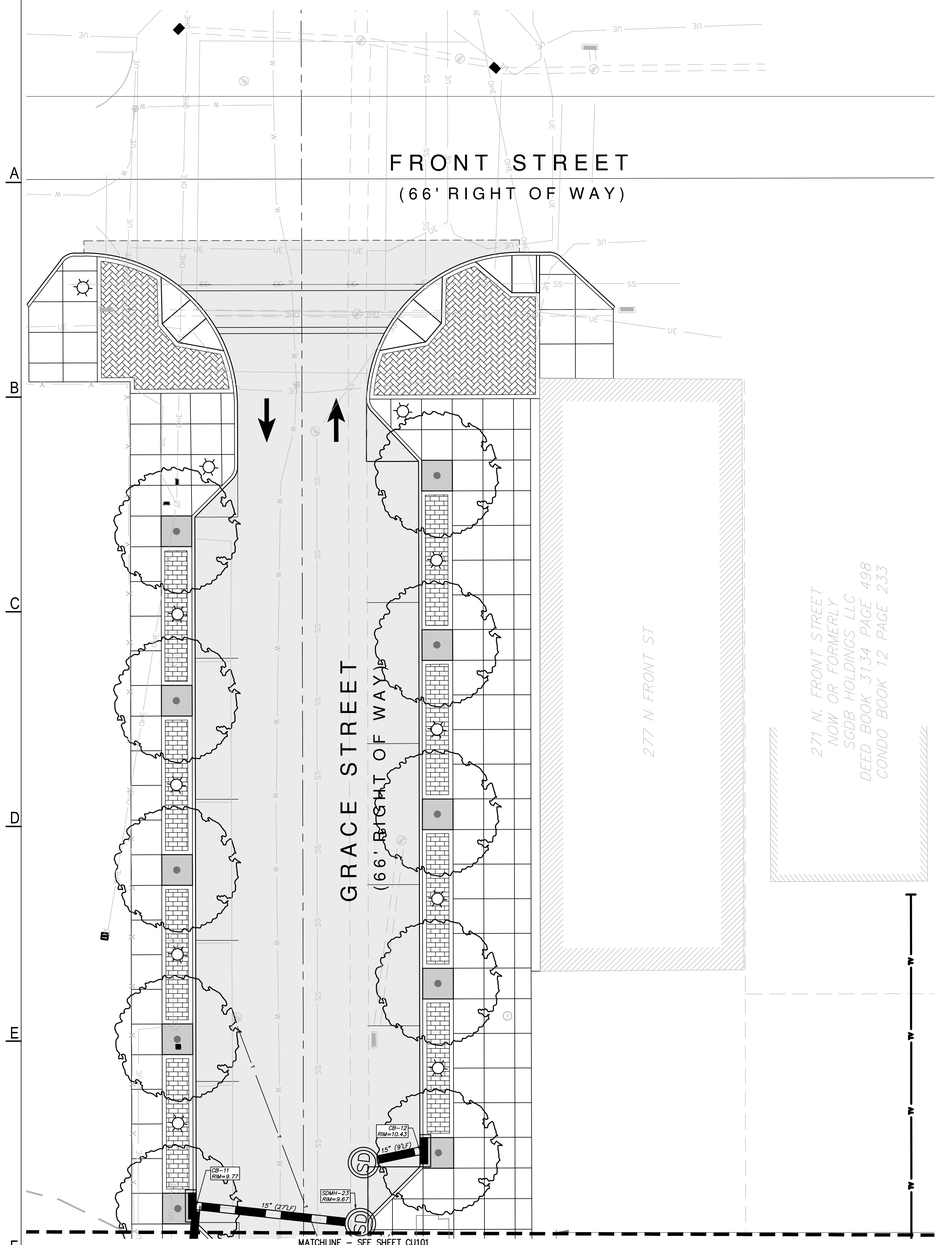

4 UTILITY PLAN- NORTHEAST Scale: 1"=10'-0"

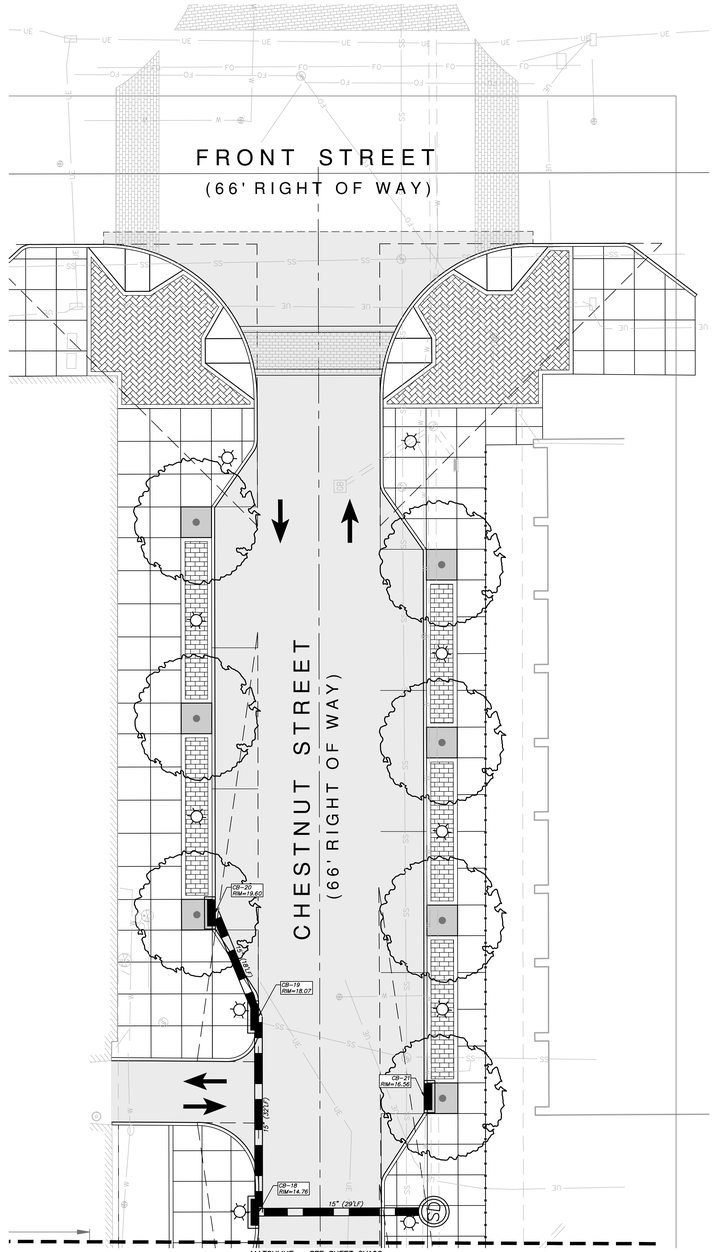

3 UTILITY PLAN - SOUTHEAST Scale: 1"=10'-0"

1. ARCHITECTURAL INFORMATION SHOWN FOR INFORMATIONAL PURPOSES ONLY. SEE ARCHITECTURAL DRAWINGS FOR DETAILED INFORMATION.
2. FOUNDATION INFORMATION SHOWN FOR INFORMATIONAL PURPOSES ONLY. SEE FOUNDATION DRAWINGS FOR DETAILED INFORMATION.
3. SEE SHEET G-001 FOR ADDITIONAL NOTES.

2 NOTES

STORMWATER MANAGEMENT PLAN
APPROVED
CITY OF WILMINGTON
ENGINEERING DEPARTMENT
DATE _____ PERMIT #_____
SIGNED_____

Approved Construction Plan

	Name	Date
Planning		
Traffic		
Fire		

For each open utility cut of City streets, a $325 permit shall be required from the City prior to occupancy and/or project acceptance.

1 APPROVALS

DMA Architecture PLLC

380-H Knollwood Street, Suite 174
Winston-Salem, NC 27103
phone: 336-723-6360
dishnermoore.com

McKIM&CREED
243 North Front Street
Wilmington, North Carolina 28401
Phone: (910)343-1048 , Fax: (910)251-8282
www.mckimcreed.com

revisions:
A - CITY OF WILMINGTON TRC SUBMITTAL 06/29/16

RIVERPLACE
(Water Street Parking Deck Redevelopment)
Block 190, City of Wilmington
Wilmington Township
New Hanover County, NC 28412

date: 06-29-16
job no. MCE 0205-0001

© 2016 DMA Architecture PLLC

SEAL 022574 ENGINEER RICHARD M. COLLIER 06/29/2016

ENLARGED UTILITY PLAN (NE & SE)

CU-103

S:\0205\0001\80-Drawings\CU101_0205\0001.dwg, 6/29/2016 12:03:53 PM, Chursey, 1:1

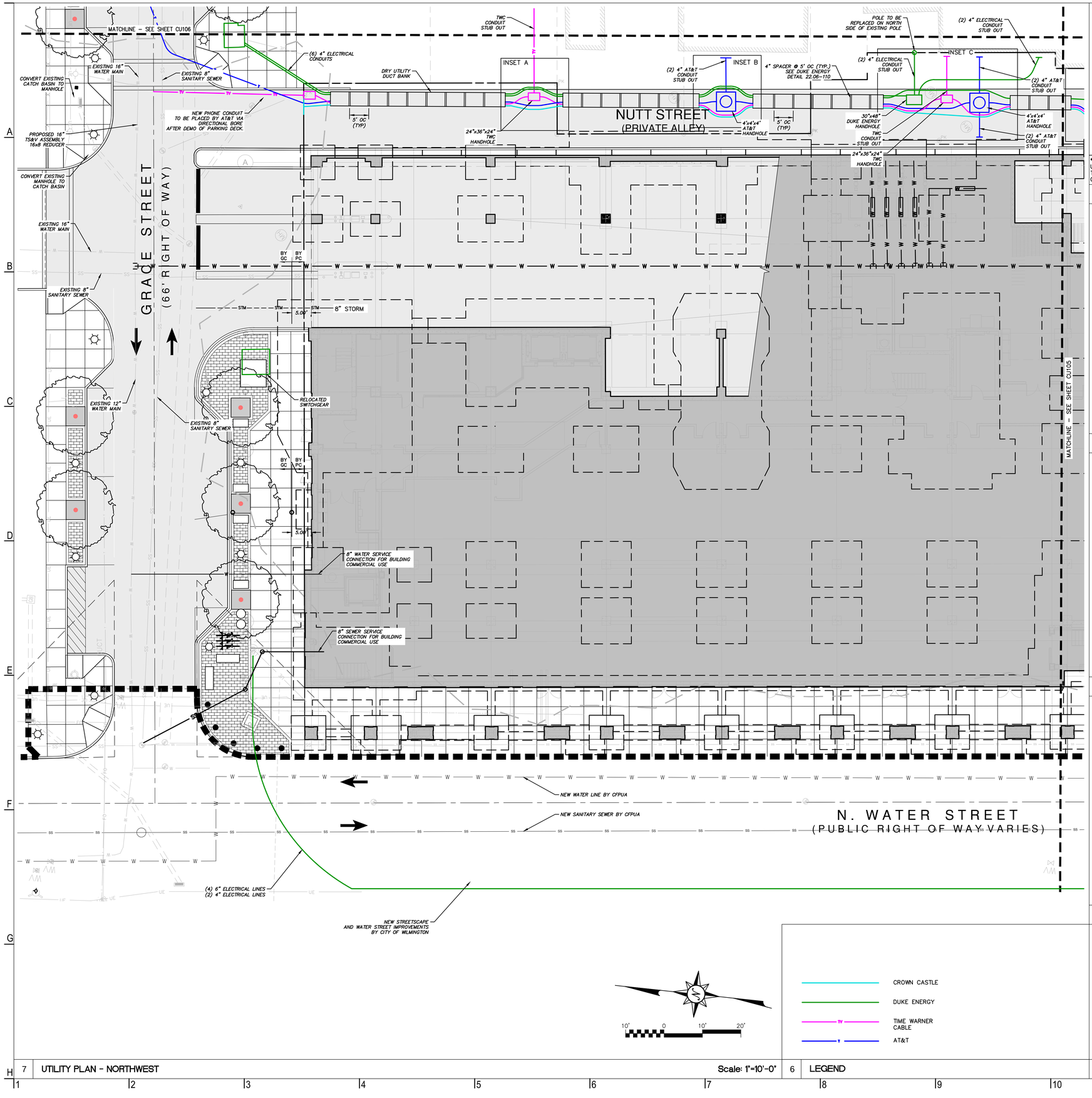

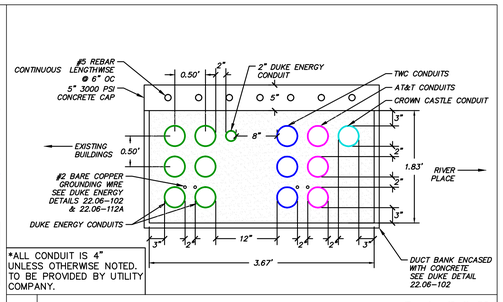

5 DUCT BANK DETAIL — Scale: 1"=1'-0"

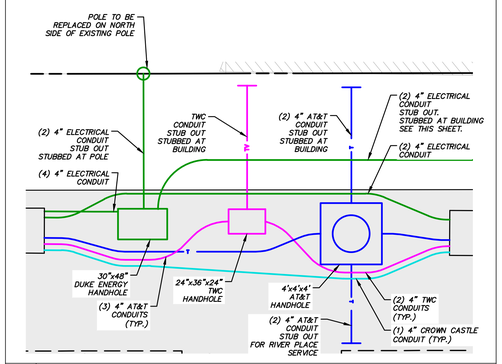

4 INSET C — Scale: 1"=5'-0"

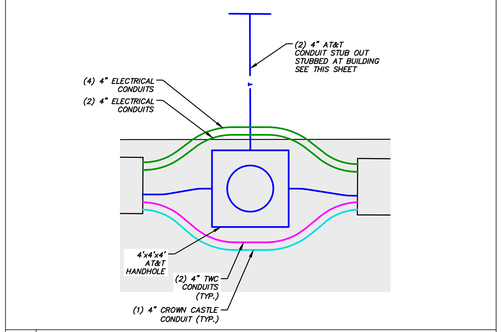

2 INSET B — Scale: 1"=4'-0"

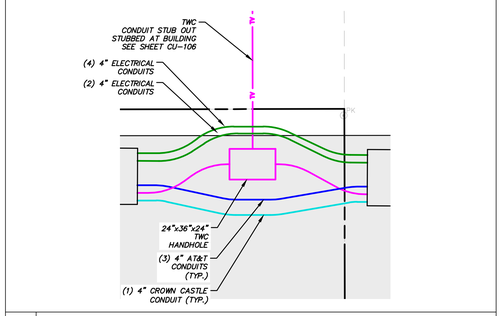

2 INSET A — Scale: 1"=4'-0"

7 UTILITY PLAN – NORTHWEST — Scale: 1"=10'-0"

6 LEGEND

CROWN CASTLE
DUKE ENERGY
TW TIME WARNER CABLE
T AT&T

1 APPROVALS

STORMWATER MANAGEMENT PLAN
APPROVED
CITY OF WILMINGTON
ENGINEERING DEPARTMENT
DATE _____ PERMIT # _____
SIGNED _____

Approved Construction Plan

	Name	Date
Planning		
Traffic		
Fire		

For each open utility cut of City streets, a $325 permit shall be required from the City prior to occupancy and/or project acceptance.

DMA Architecture PLLC
380-H Knollwood Street, Suite 174
Winston-Salem, NC 27103
phone: 336-723-6360
dishermoore.com

McKIM & CREED
243 North Front Street
Wilmington, North Carolina 28401
Phone: (910)343-1048 , Fax: (910)251-8282
www.mckimcreed.com

revisions:
A - CITY OF WILMINGTON TRC SUBMITTAL 06/29/16

RIVERPLACE
(Water Street Parking Deck Redevelopment)
Block 190, City of Wilmington
Wilmington Township
New Hanover County, NC 28412

date: 06-29-16
job no. MCE 0205-0001

© 2016 DMA Architecture PLLC

NORTH CAROLINA PROFESSIONAL ENGINEER SEAL 022574 RICHARD M. COLLIER 06/29/2016

ENLARGED
DRY UTILITY PLAN (NW)

CU-104

S:\0205\0001\8h-Drawings\CU104_02050001.dwg, 6/29/2016 12:04:48 PM, CNunley, 11

MATCHLINE – SEE SHEET CU106

INSET D

(2) NEW 4'x4' PULLBOX

INSET E

(2) NEW 4'x4' PULL BOXES. INSTALL NEXT TO CONDUITS TO TRANSFORMERS ON UPPER LEVEL. DO NOT PENETRATE BOX

TWC CONNECTION STUB OUT

DRY UTILITY DUCT BANK

4" SPACER @ 5' OC (TYP.) SEE DUKE ENERGY DETAIL 22.06-110

30"x48"x24" TWC HANDHOLE

4'x4'x4' AT&T HANDHOLE

NUTT STREET
(PRIVATE ALLEY)

5' OC (TYP)

24"x36"x24" TWC HANDHOLE

5' OC (TYP)

BY GC

BY PC

5.00'

STUB (2) 4" CONDUITS FROM EACH PULLBOX FOR FUTURE SERVICE AT TRANSFORMER VAULT

GAS

PROPOSED GAS LINE

STORM DRAIN THRU WALL ABOVE SLAB WITH CLEANOUT

EXISTING DUKE ENERGY 4'x4' PULLBOX STUB CONDUITS TO NORTH SIDE OF PULLBOX. DO NOT PENETRATE BOX.

RESIDENTIAL SANITARY SEWER THRU WALL ABOVE SLAB WITH CLEANOUT

BY PC

BY GC

PROPOSED 10" DIP DOMESTIC/FIRE WATER MAIN

MATCHLINE – SEE SHEET CU104

8" DOMESTIC SANITARY SEWER SERVICE WITH CLEANOUTS

5.00'

NEW TELEPHONE CONDUIT TO BE STUBBED BY CONTRACTOR. CONNECTION TO EXISTING MANHOLE TO BE MADE BY AT&T.

SLOT DRAIN

CHESTNUT STREET
(66' RIGHT OF WAY)

SLOT DRAIN

3.50'

8.00'

#2.00"

(2) 1000 GALLON GREASE INTERCEPTOR DEPTH = 5'

24"x36"x24" TWC HANDHOLE (LOCATION TO BE DETERMINED)

MATCHLINE – THIS SHEET

N. WATER STREET
(PUBLIC RIGHT OF WAY VARIES)

NEW WATER LINE BY CFPUA

NEW SANITARY SEWER BY CFPUA

(2) 4" ELECTRICAL LINES

(4) 6" ELECTRICAL LINES

NEW STREETSCAPE AND WATER STREET IMPROVEMENTS BY CITY OF WILMINGTON

10' 0 10' 20'

MATCHLINE – THIS SHEET

10'x10'x8' DUKE ENERGY MANHOLE, CENTERED BETWEEN DOORS ON WATER STREET BUILDING.

7 UTILITY PLAN – SOUTHWEST Scale: 1"=10'-0"

6 UTILITY PLAN – SOUTHWEST EXT. Scale: 1"=20'-0"

CROWN CASTLE

DUKE ENERGY

TW TIME WARNER CABLE

T AT&T

5 LEGEND

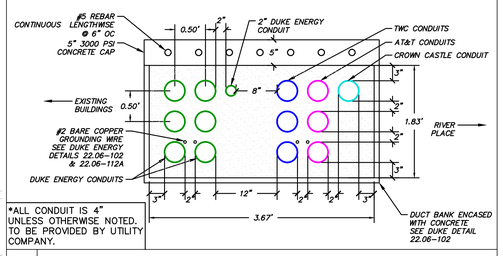

*ALL CONDUIT IS 4" UNLESS OTHERWISE NOTED. TO BE PROVIDED BY UTILITY COMPANY.

4 CONCRETE DUCT BANK DETAIL Scale: 1"=1'-0"

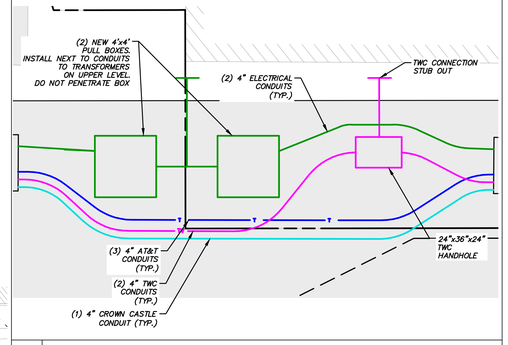

3 INSET E Scale: 1"=4'-0"

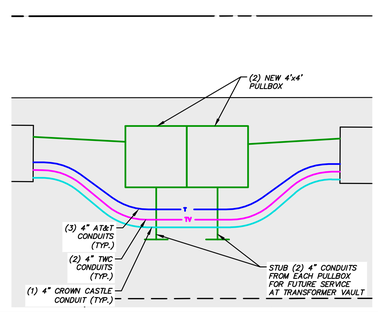

2 INSET D Scale: 1"=4'-0"

STORMWATER MANAGEMENT PLAN
APPROVED
CITY OF WILMINGTON
ENGINEERING DEPARTMENT
DATE _____ PERMIT #_____
SIGNED_____

Approved Construction Plan

	Name	Date
Planning		
Traffic		
Fire		

For each open utility cut of City streets, a $325 permit shall be required from the City prior to occupancy and/or project acceptance.

1 APPROVALS

DMA Architecture PLLC

380-H Knollwood Street, Suite 174
Winston-Salem, NC 27103
phone: 336-723-6360
dishermoore.com

McKIM&CREED
243 North Front Street
Wilmington, North Carolina 28401
Phone: (910)343-1048 , Fax: (910)251-8282
www.mckimcreed.com

revisions:
A - CITY OF WILMINGTON TRC SUBMITTAL 06/29/16

RIVERPLACE
(Water Street Parking Deck Redevelopment)
Block 190, City of Wilmington
Wilmington Township
New Hanover County, NC 28412

date: 06-29-16
job no. MCE 0205-0001

© 2016 DMA Architecture PLLC

NORTH CAROLINA PROFESSIONAL ENGINEER SEAL 022574 RICHARD M. COLLIER 06/29/2016

ENLARGED
DRY UTILITY PLAN (SW)

CU-105

S:\0205\0001\08-Drawings\CU1104_0205001.dwg, 6/29/2016 12:05:05 PM, CHunsley, 1:1

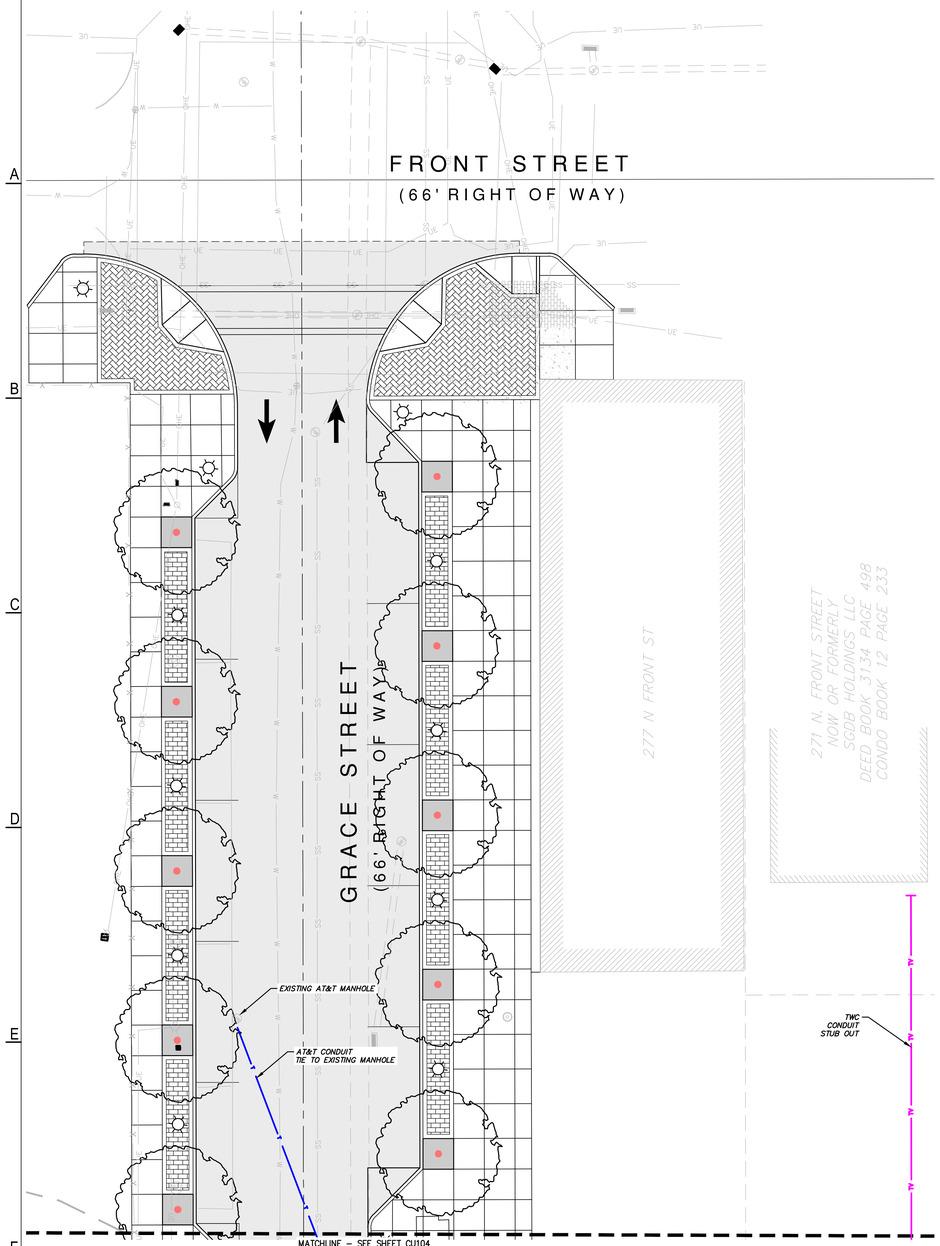

4 UTILITY PLAN- NORTHEAST Scale: 1"=10'-0"

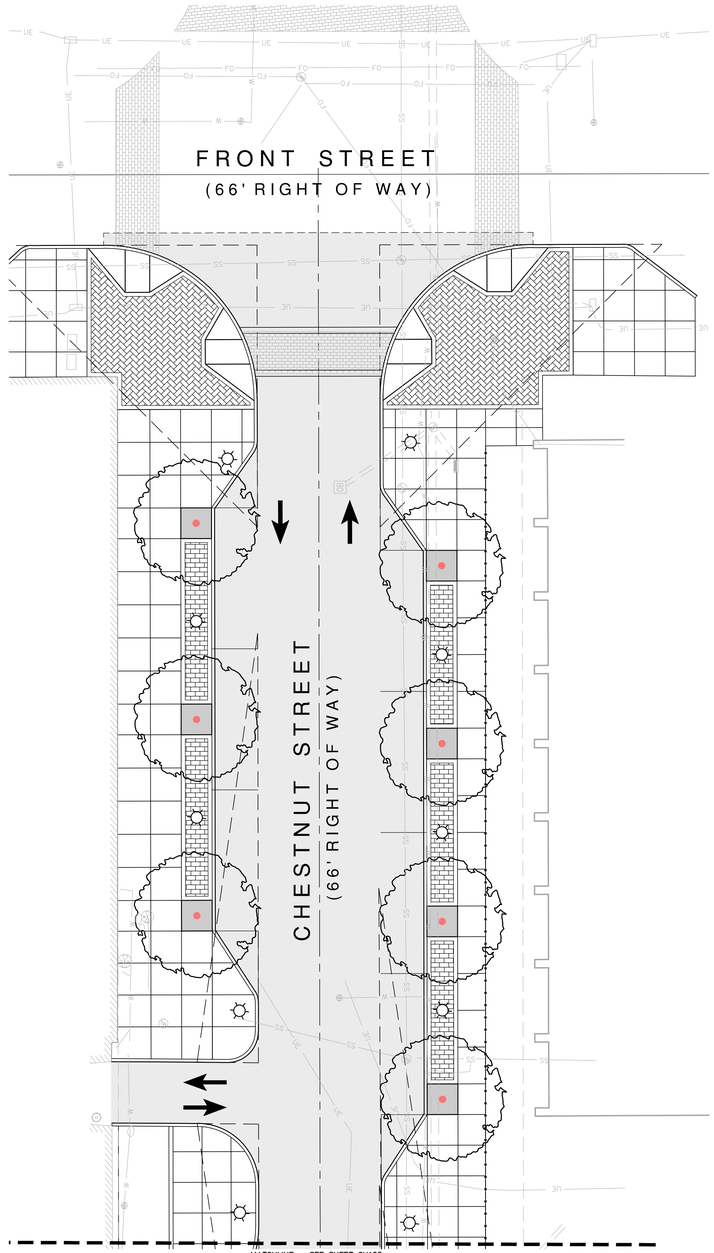

3 UTILITY PLAN - SOUTHEAST Scale: 1"=10'-0"

1. ARCHITECTURAL INFORMATION SHOWN FOR INFORMATIONAL PURPOSES ONLY. SEE ARCHITECTURAL DRAWINGS FOR DETAILED INFORMATION.
2. FOUNDATION INFORMATION SHOWN FOR INFORMATIONAL PURPOSES ONLY. SEE FOUNDATION DRAWINGS FOR DETAILED INFORMATION.
3. SEE SHEET G-001 FOR ADDITIONAL NOTES.

2 NOTES

STORMWATER MANAGEMENT PLAN
APPROVED
CITY OF WILMINGTON
ENGINEERING DEPARTMENT
DATE _____ PERMIT #_____
SIGNED_____

Approved Construction Plan

	Name	Date
Planning		
Traffic		
Fire		

For each open utility cut of City streets, a $325 permit shall be required from the City prior to occupancy and/or project acceptance.

1 APPROVALS

DMA Architecture PLLC

380-H Knollwood Street, Suite 174
Winston-Salem, NC 27103
phone: 336-723-6360
dishnermoore.com

McKIM&CREED
243 North Front Street
Wilmington, North Carolina 28401
Phone: (910)343-1048 , Fax: (910)251-8282
www.mckimcreed.com

revisions:
A - CITY OF WILMINGTON TRC SUBMITTAL 06/29/16

RIVERPLACE
(Water Street Parking Deck Redevelopment)
Block 190, City of Wilmington
Wilmington Township
New Hanover County, NC 28412

date: 06-29-16
job no. MCE 0205-0001

© 2016 DMA Architecture PLLC

NORTH CAROLINA PROFESSIONAL SEAL 022574 ENGINEER RICHARD M. COLLIER
06/29/2016

ENLARGED
DRY UTILITY PLAN
(NE & SE)

CU-106

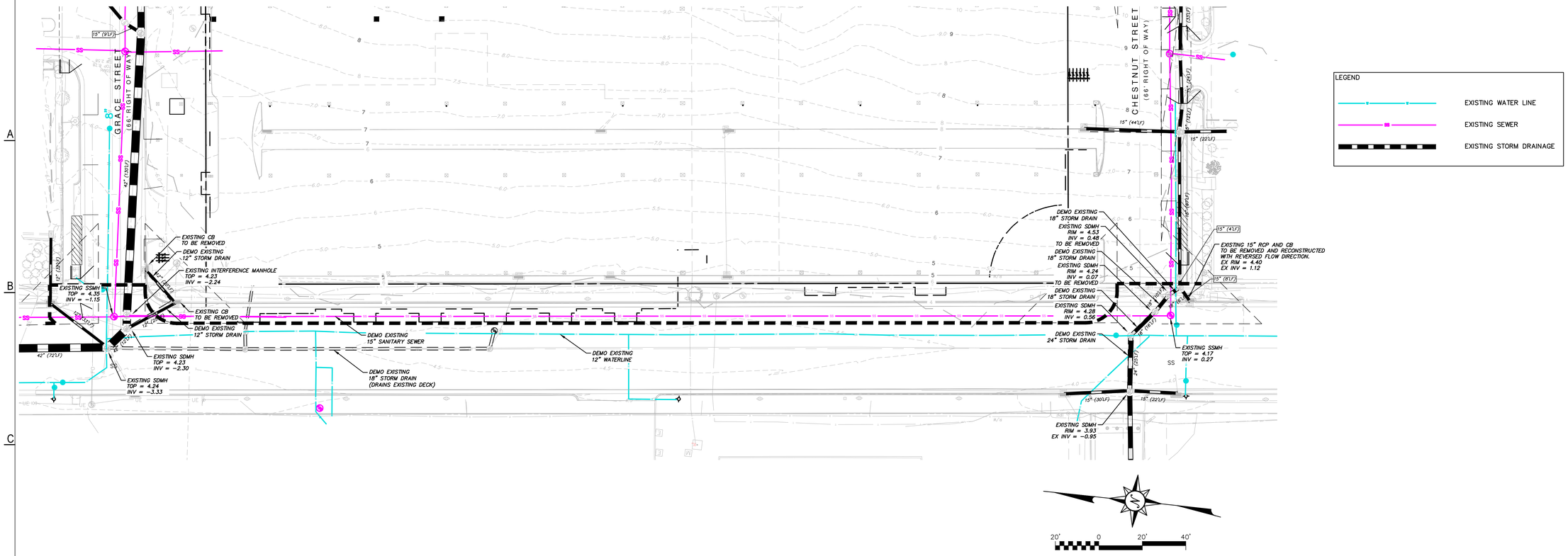

2 EXISTING CONDITIONS — Scale: 1"=20'-0"

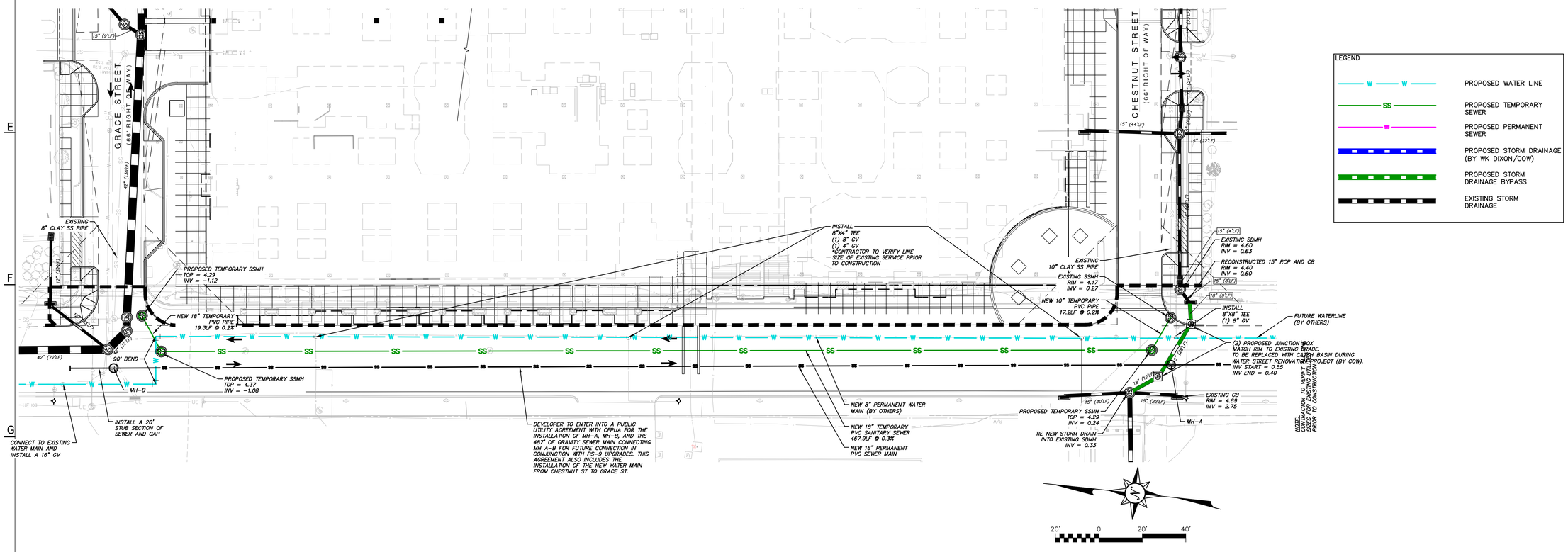

1 TEMPORARY SEWER — Scale: 1"=20'-0"

DMA Architecture PLLC
380-H Knollwood Street, Suite 174
Winston-Salem, NC 27103
phone: 336-723-6360
dishmermoore.com

McKIM&CREED
243 North Front Street
Wilmington, North Carolina 28401
Phone: (910)343-1048 , Fax: (910)251-8282
www.mckimcreed.com

revisions:
A - CITY OF WILMINGTON TRC SUBMITTAL 06/29/16

RIVERPLACE
(Water Street Parking Deck Redevelopment)
Block 190, City of Wilmington
Wilmington Township
New Hanover County, NC 28412

date: 06-29-16
job no. MCE 0205-0001

© 2016 DMA Architecture PLLC

NORTH CAROLINA PROFESSIONAL ENGINEER SEAL 022574 RICHARD M. COLLIER
06/29/2016

WATER STREET
UTILITY PLAN

CU-107

N:\0205\0001\05-Drawings\CU107_20150001.dwg, 6/29/2016 12:06:08 PM, CAvarley, 1:1

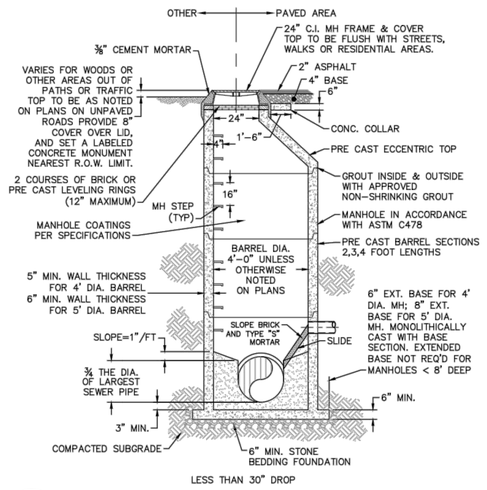

SD-1 PRECAST CONCRETE OFFSET MANHOLE TYPICAL
NOT TO SCALE

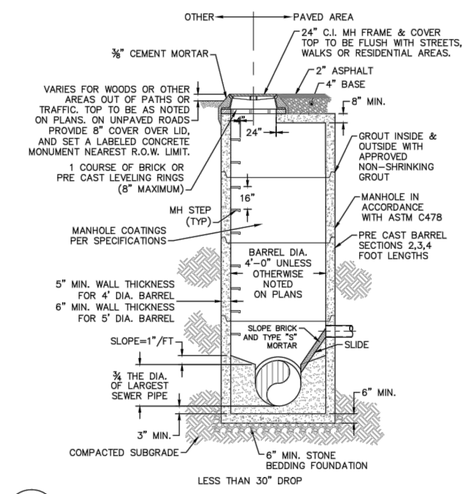

SD-2 PRECAST CONCRETE FLAT TOP MANHOLE TYPICAL
NOT TO SCALE

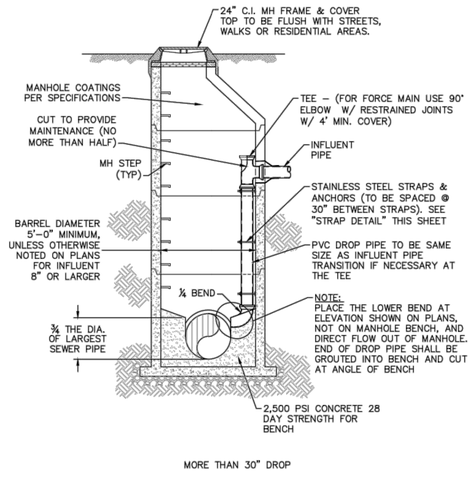

SD-3 DROP MANHOLE
NOT TO SCALE

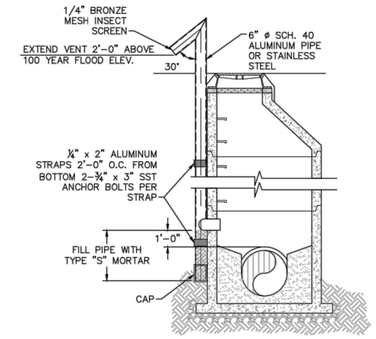

SD-4 STANDARD VENT MANHOLE
NOT TO SCALE

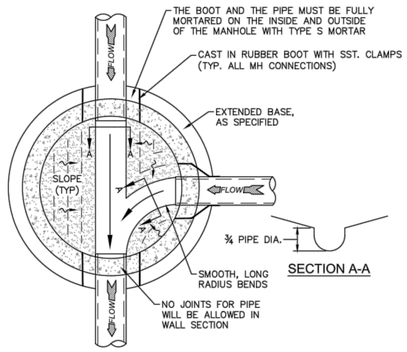

SD-5 MANHOLE FLOOR PLAN
NOT TO SCALE

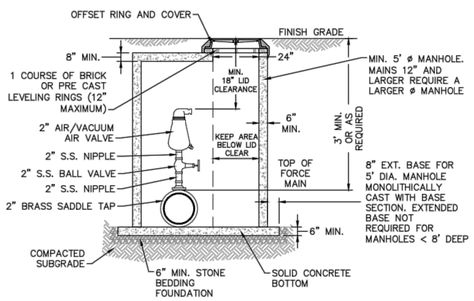

NOTES:
1. CONTRACTOR TO INSTALL VALVE AND MANHOLE AT SUFFICIENT DEPTH TO ALLOW FOR ACCESS.
2. FORCE MAIN TO BE OFFSET IN MANHOLE TO KEEP AREA BELOW LID CLEAR.
3. REFER TO SPECIFICATIONS FOR ADDITIONAL DETAILS.
4. USE CAST IN RUBBER BOOT WITH SST. CLAMPS FOR ALL MH CONNECTIONS, INCLUDING FORCE MAIN.

SD-6 AIR/ VACUUM AND AIR RELEASE COMBINATION VALVE
NOT TO SCALE

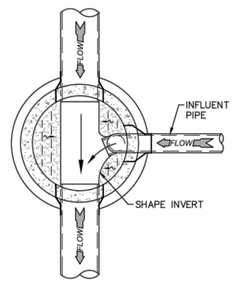

SD-7 DROP MANHOLE FLOOR PLAN
NOT TO SCALE

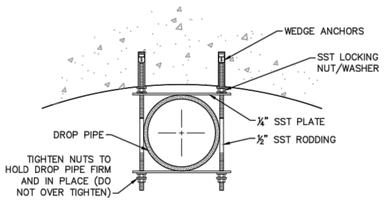

NOTE: ALL PARTS TO BE 316 SST.

SD-8 STRAP DETAIL
NOT TO SCALE

CAPE FEAR PUBLIC UTILITY AUTHORITY STANDARD NOTES:

1. SEWER GUARDS REQUIRED AT ALL MANHOLES. STAINLESS STEEL SEWER GUARDS REQUIRED AT MANHOLES LOCATED IN TRAFFIC AREAS.
2. WATER AND SEWER SERVICES SHALL BE PERPENDICULAR TO MAIN AND TERMINATE AT RIGHT-OF-WAY LINE. SEWER SERVICES IN CUL-DE-SACS ARE REQUIRED TO BE PERPENDICULAR, OR MUST ORIGINATE IN END OF LINE MANHOLE AND TERMINATE AT RIGHT-OF-WAY LINE.
3. ALL SERVICES TYING INTO DUCTILE IRON MAINS SHALL BE CONSTRUCTED OF CLASS 50, DIP, WITH PROTECTO 401 CERAMIC EPOXY LINING.
4. MINIMUM 10' UTILITIES EASEMENT PROVIDED ALONG THE FRONTAGE OF ALL LOTS AND AS SHOWN FOR NEW DEVELOPMENTS.
5. NO FLEXIBLE COUPLINGS SHALL BE USED.
6. ALL STAINLESS STEEL FASTENERS SHALL BE 316.
7. CLEANOUTS SHALL BE LOCATED A MINIMUM OF 12 FEET FROM ALL PROPERTY CORNERS. WATER METER BOXES ARE TO BE A MINIMUM OF 5 FEET FROM THE PROPERTY CORNER.

SD-9 STANDARD NOTES
(REQUIRED ON ALL PLAN AND PROFILE SHEETS)

GENERAL NOTES:
1. NO EXCAVATED MATERIAL SHALL BE PLACED IN ANY STREAM, DITCH OR DRAINAGE-WAY.
2. THE CONTRACTOR IS RESPONSIBLE FOR LOCATING ALL UNDERGROUND UTILITIES BEFORE ANY CONSTRUCTION BEGINS.
3. THE CONTRACTOR IS RESPONSIBLE FOR TEMPORARY SEDIMENT AND EROSION CONTROL MEASURES WHILE CONSTRUCTION IS IN PROGRESS.
4. THE CONTRACTOR IS RESPONSIBLE FOR STABILIZATION OF ALL DISTURBED AREAS.
5. THE CONTRACTOR IS RESPONSIBLE FOR LAY DOWN AND STOCKPILE AREAS (TO ARRANGE AND ENSURE COMPLIANCE WITH ALL LOCAL AND STATE REGULATIONS).

THE DETAILS SHOWN HEREON SUPERCEDE CFPUA WRITTEN TECHNICAL SPECIFICATIONS VERSIONS 1.00 - 1.04

REV:	DESCRIPTION:	DATE:
1	AIR / VACUUM AND AIR RELEASE COMBINATION VALVE REVISED	10/26/12
2	STANDARD SEWER NOTE #6 REVISED	12/10/12
3	REVISED STANDARD VENT MANHOLE TO EXTEND VENT 2'-0" ABOVE 100 YR FLOOD	11/20/14
4	Revised Multiple Details	02/15/16

CFPUA SANITARY SEWER

STANDARD DETAILS

CAPE FEAR PUBLIC UTILITY AUTHORITY
235 GOVERNMENT CENTER DRIVE
WILMINGTON, NC 28403
OFFICE: (910)332-6560
Stewardship. Sustainability. Service.

DATE: 1/9/12
SCALE: N/A
DRAWN BY: CFPUA
CHECKED BY: CFPUA
PROJECT NO. :

SHEET NO: SSD-1

STORMWATER MANAGEMENT PLAN
APPROVED
CITY OF WILMINGTON
ENGINEERING DEPARTMENT
DATE _____ PERMIT #_____
SIGNED_____

Approved Construction Plan
Name Date
Planning_____
Traffic_____
Fire_____

For each open utility cut of City streets, a $325 permit shall be required from the City prior to occupancy and/or project acceptance.

2 STD CFPUA DETAILS
1 APPROVALS

S:\Engineers\CFPUA Standard Details\CAD Files\CFPUA Sewer Details.dwg, 2/15/2016 1:29:45 PM, john.cuttt

S:\2005\05001\05-Drawings\CU\501_03\05001.dwg, 6/29/2016 12:06:38 PM, CNunley, 1:1

DMA Architecture PLLC
380-H Knollwood Street, Suite 174
Winston-Salem, NC 27103
phone: 336-723-6360
dishnermoore.com

McKIM & CREED
243 North Front Street
Wilmington, North Carolina 28401
Phone: (910)343-1048 , Fax: (910)251-8282
www.mckimcreed.com

revisions:
A - CITY OF WILMINGTON TRC SUBMITTAL 06/29/16

RIVERPLACE
(Water Street Parking Deck Redevelopment)
Block 190, City of Wilmington
Wilmington Township
New Hanover County, NC 28412

date: 06-29-16
job no. MCE 0205-0001

© 2016 DMA Architecture PLLC

NORTH CAROLINA PROFESSIONAL ENGINEER SEAL 022574 RICHARD M. COLLIER 06/29/2016

CFPUA
UTILITY DETAILS

CU-501

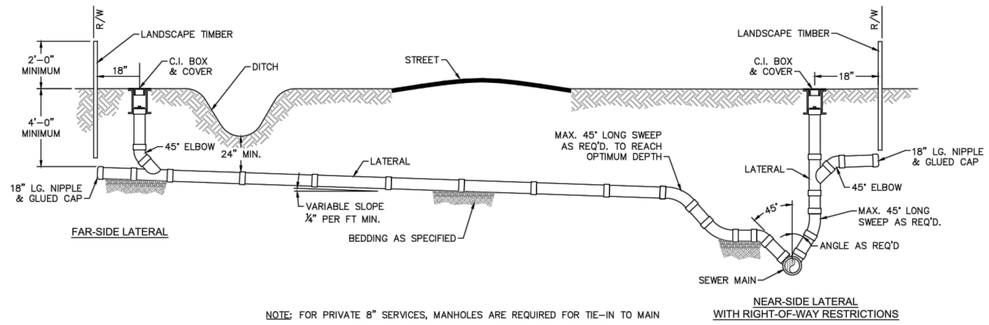

NOTE: FOR PRIVATE 8" SERVICES, MANHOLES ARE REQUIRED FOR TIE-IN TO MAIN

STANDARD SERVICE CONNECTION TO SANITARY SEWER

SD-19 NOT TO SCALE

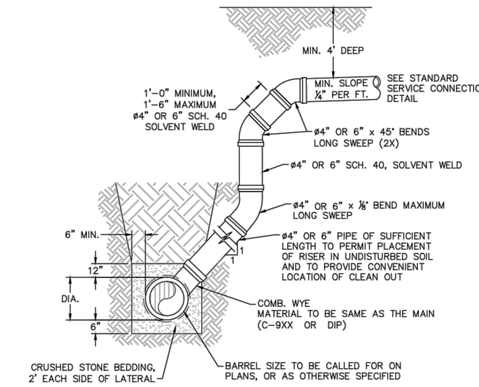

NOTES:
1. SPECIAL CARE SHALL BE TAKEN DURING BACKFILL OPERATIONS. THE RISER SHALL BE PLUMB AND TRUE AT ALL TIMES, AND REST ON FIRM, STABLE FOUNDATION.
2. FOR PRIVATE 8" SERVICES, MANHOLES ARE REQUIRED FOR CONNECTION TO SYSTEM AND AT THE PROPERTY LINE, WITH REQUIRED EASEMENT.

MAIN DEPTH GREATER THAN 8 FT

DEEP SERVICE LATERAL

SD-12 NOT TO SCALE

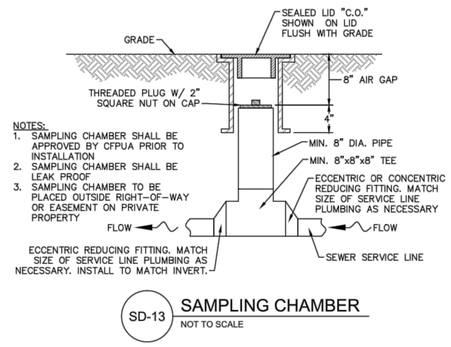

NOTES:
1. SAMPLING CHAMBER SHALL BE APPROVED BY CFPUA PRIOR TO INSTALLATION
2. SAMPLING CHAMBER SHALL BE LEAK PROOF
3. SAMPLING CHAMBER TO BE PLACED OUTSIDE RIGHT-OF-WAY OR EASEMENT ON PRIVATE PROPERTY

SAMPLING CHAMBER

SD-13 NOT TO SCALE

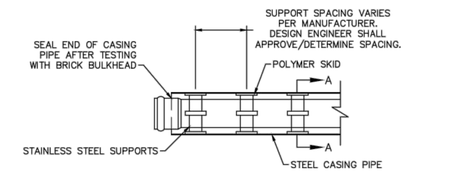

PLAN

NOTE: PIPE SUPPORT TO BE PLACED TO PROVIDE PROPER SUPPORT, ALIGNMENT, AND GRADE AS SPECIFIED. CONTINUOUS SUPPORTS MAY BE USED AS ALTERNATIVE. OIL, GREASE, OR PETROLEUM PRODUCT MAY NOT BE USED AS LUBRICANT.

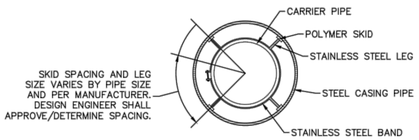

SECTION A-A

NOTE: ALL STAINLESS STEEL PARTS TO BE 316 SST.

PIPE CASING SUPPORT DETAIL

SD-17 NOT TO SCALE

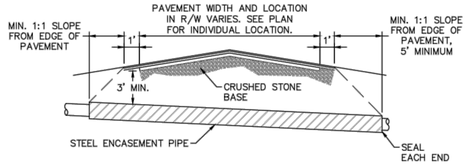

NOTES:
1. CASING WILL BE INSTALLED AT LINE AND GRADE SHOWN ON INDIVIDUAL PROFILE FOR EACH CROSSING. BORING/JACKING TO LINE AND GRADE IS REQUIRED.
2. TRACER WIRE SHALL BE CONTINUED THROUGH CASING.

TYPICAL BORING/ JACKING DETAIL

SD-16 NOT TO SCALE

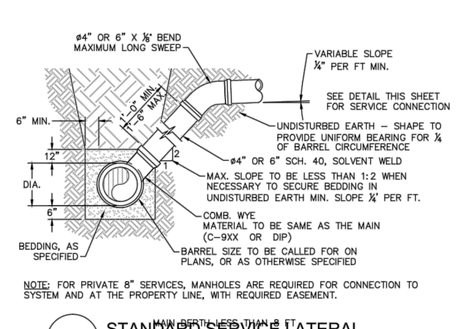

NOTE: FOR PRIVATE 8" SERVICES, MANHOLES ARE REQUIRED FOR CONNECTION TO SYSTEM AND AT THE PROPERTY LINE, WITH REQUIRED EASEMENT.

STANDARD SERVICE LATERAL

SD-10 NOT TO SCALE

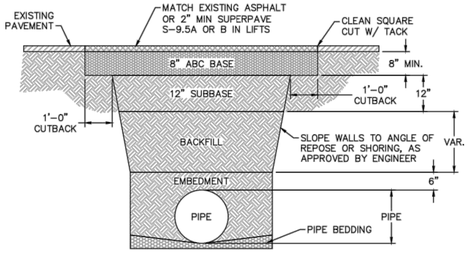

NOTES:
1. BACKFILL SHALL BE SUITABLE MATERIAL THAT IS FREE FROM HEAVY CLAY, GUMBOS, DEBRIS, ORGANICS AND LITTLE TO NO EXCESSIVE MOISTURE.
2. SELECT BACKFILL MAY BE SUBSTITUTED OR REQUIRED BY CITY TO ACHIEVE COMPACTION, (I.E. #57, ABC, CRUSHED LIMESTONE, CLEAN SAND, FLOWABLE FILL, ETC).
3. 8-INCH OF ABC BASE MATERIAL SHALL BE USED ON CITY STREETS.
4. BACKFILL AND BASE MATERIALS SHALL BE COMPACTED 12" MINIMUM LIFTS
5. SOIL SHALL BE COMPACTED BY A MECHANIZED TAMPER (I.E JUMPING JACK), HOWEVER, VIBRATORY ROLLERS > 18" WIDTH MAY BE USED FOR LARGER EXCAVATIONS. THE PLATE TAMP METHOD SHALL NOT BE USED.
6. ALL APPROVED CASTINGS SHALL BE SET FLUSH TO GRADE AND SUPPORTED IF APPLICABLE.
7. ABC BASE AND SUBBASE COMPACTED TO 98% AND BACKFILL AND EMBEDMENT COMPACTED TO 90% AS DETERMINED BY THE MODIFIED PROCTOR AASHTO METHOD T-99.
8. 1-FOOT CUTBACKS OF ASPHALT SHALL BE PREPARED ON UNDISTURBED SOIL. MINIMUM ASPHALT DENSITY IS 90%.

(FOR PRIVATE ROADS AND PAVED AREAS; CONTRACTOR TO MEET MIN. REQUIREMENTS AS DEFINED BY RIGHT-OF-WAY OWNER FOR PUBLIC ROAD REPAIRS)

PAVEMENT REPAIR WHERE PIPE INSTALLED

SD-14 NOT TO SCALE

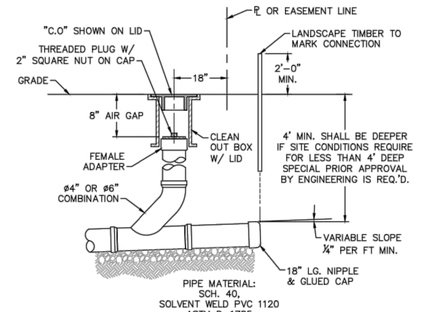

NOTE: FOR PRIVATE 8" SERVICES, MANHOLES ARE REQUIRED FOR CONNECTION TO SYSTEM AND AT THE PROPERTY LINE, WITH REQUIRED EASEMENT.

SERVICE CONNECTION AND CLEAN-OUT

SD-11 NOT TO SCALE

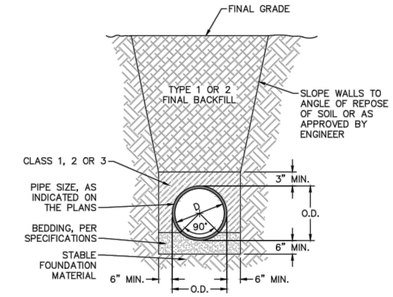

TYPICAL TRENCH DETAIL

SD-15 NOT TO SCALE

GENERAL NOTES:
1. NO EXCAVATED MATERIAL SHALL BE PLACED IN ANY STREAM, DITCH OR DRAINAGE-WAY.
2. THE CONTRACTOR IS RESPONSIBLE FOR LOCATING ALL UNDERGROUND UTILITIES BEFORE ANY CONSTRUCTION BEGINS.
3. THE CONTRACTOR IS RESPONSIBLE FOR TEMPORARY SEDIMENT AND EROSION CONTROL MEASURES WHILE CONSTRUCTION IS IN PROGRESS.
4. THE CONTRACTOR IS RESPONSIBLE FOR STABILIZATION OF ALL DISTURBED AREAS.
5. THE CONTRACTOR IS RESPONSIBLE FOR LAY DOWN AND STOCKPILE AREAS (TO ARRANGE AND ENSURE COMPLIANCE WITH ALL LOCAL AND STATE REGULATIONS).

THE DETAILS SHOWN HEREON SUPERCEDE CFPUA WRITTEN TECHNICAL SPECIFICATIONS VERSIONS 1.00 - 1.04

REV:	DESCRIPTION:	DATE:
1	SAMPLING CHAMBER REVISED	10/26/12
2	Revised Multiple Details	02/15/16

CFPUA SANITARY SEWER

STANDARD DETAILS

CAPE FEAR PUBLIC UTILITY AUTHORITY
235 GOVERNMENT CENTER DRIVE
WILMINGTON, NC 28403
OFFICE: (910)332-6560
Stewardship. Sustainability. Service.

DATE: 1/9/12
SCALE: N/A
DRAWN BY: CFPUA
CHECKED BY: CFPUA
PROJECT NO. :

SHEET NO: SSD-2

STORMWATER MANAGEMENT PLAN
APPROVED
CITY OF WILMINGTON
ENGINEERING DEPARTMENT
DATE _____ PERMIT #_____
SIGNED _____

Approved Construction Plan

	Name	Date
Planning		
Traffic		
Fire		

For each open utility cut of City streets, a $325 permit shall be required from the City prior to occupancy and/or project acceptance.

H 2 STD CFPUA DETAILS

H 1 APPROVALS

DMA Architecture PLLC
380-H Knollwood Street, Suite 174
Winston-Salem, NC 27103
phone: 336-723-6360
dishnermoore.com

McKIM & CREED
243 North Front Street
Wilmington, North Carolina 28401
Phone: (910)343-1048 , Fax: (910)251-8282
www.mckimcreed.com

revisions:
A - CITY OF WILMINGTON TRC SUBMITTAL 06/29/16

RIVERPLACE
(Water Street Parking Deck Redevelopment)
Block 190, City of Wilmington
Wilmington Township
New Hanover County, NC 28412

date: 06-29-16
job no. MCE 0205-0001

© 2016 DMA Architecture PLLC

NORTH CAROLINA PROFESSIONAL ENGINEER SEAL 022574 RICHARD A. COLLIER
06/29/2016

CFPUA
UTILITY DETAILS

CU-502

S:\0205\0001\WB-Drawings\CU\01_0205001.dwg, 6/29/2016 12:06:42 PM, CAvaney, 11

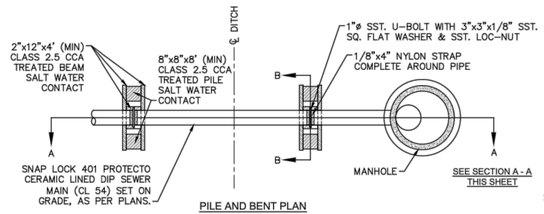

PILE AND BENT PLAN
NOT TO SCALE

NOTES:
1. PILES AND PILE DRIVING SHALL CONFORM TO NCDOT STANDARD SPECIFICATIONS FOR ROADS AND STRUCTURES, JANUARY 2002, SECTIONS 445, 450, 1082-2 & 1084-2.
2. CENTERLINE OF BOLTS TO BE A MINIMUM OF 3" FROM OUTSIDE EDGE OF TIMBER. BOLTS TO BE A MINIMUM OF 3" CENTERLINE TO CENTERLINE.
3. ALL STAINLESS STEEL SHALL BE 316. STAINLESS STRAP TO BE COLD FORMED.
4. PILE SHALL NOT OBSTRUCT FLOW OR CAUSE EROSION OF DITCH/STREAM BANK.
5. MIN. CLASS 54 DIP-ENGINEER MUST DESIGN LOADING.
6. DESIGN SHALL BE APPROVED BY CFPUA.

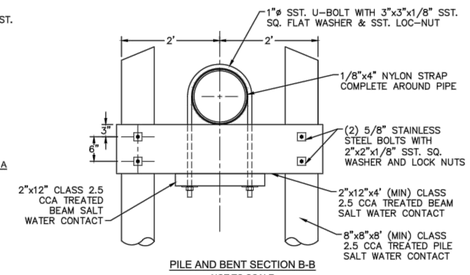

PILE AND BENT SECTION B-B
NOT TO SCALE

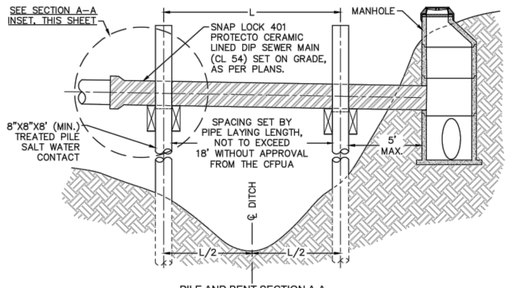

PILE AND BENT SECTION A-A
NOT TO SCALE

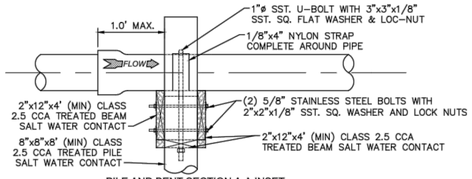

PILE AND BENT SECTION A-A INSET
NOT TO SCALE

SD-20 PILE AND BENT DETAIL
NOT TO SCALE

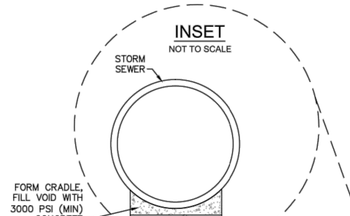

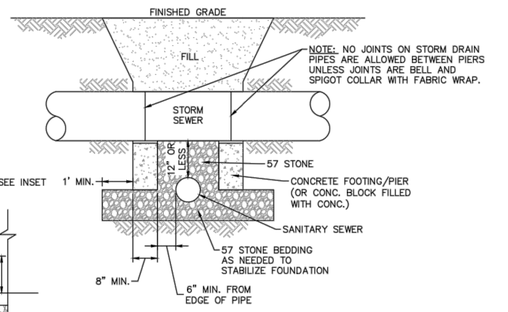

THE FOLLOWING MUST BE FOLLOWED IN THE CASES OF GRAVITY SEWER UNDER STORM DRAIN:
- A SEPARATION OF LESS THAN 12"BETWEEN STORM DRAIN AND GRAVITY SEWER, STORM DRAIN MUST BE BRIDGED.
- A SEPARATION OF 12" TO LESS THAN 24"BETWEEN STORM DRAIN AND GRAVITY SEWER, GRAVITY SEWER CAN BE DIP OR STORM DRAIN CAN BE BRIDGED. (PER DWR REGULATIONS)
- A SEPARATION OF 24" OR GREATER BETWEEN STORM DRAIN AND GRAVITY SEWER REQUIRES NO BRIDGING OR DIP.

SD-24 STRUCTURAL BRIDGING DETAIL FOR STORMWATER OVER GRAVITY SEWER INSTALLATIONS WITH LESS THAN 12" SEPARATION
NOT TO SCALE

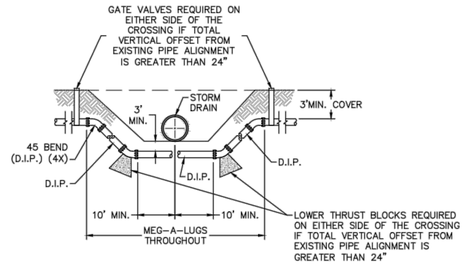

NOTE: USE D.I.P. (CL50 OR BETTER)

SD-18 FORCE MAIN DITCH AND STORM DRAIN CROSSING
NOT TO SCALE

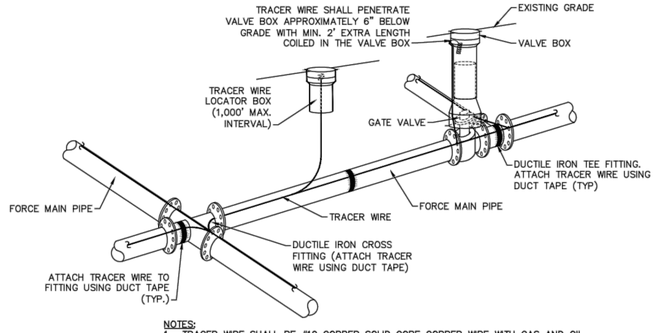

NOTES:
1. TRACER WIRE SHALL BE #10 COPPER SOLID CORE COPPER WIRE WITH GAS AND OIL RESISTANT INSULATION.
2. WIRE SHALL BE STRAPPED TO ALL PVC FORCE MAIN PIPING WITH DUCT TAPE AT 12 FOOT INTERVALS ALONG THE PIPE.
3. SECURE WIRE TO ALL TEE AND CROSS FITTINGS WITH DUCT TAPE.
4. ALL SPLICES IN THE WIRE SHALL BE MADE WITH 3M DBR DIRECT BURY SPLICE KIT AN UNDERGROUND RATED, WATERTIGHT, AND APPROVED SPLICE CONNECTOR OR APPROVED EQUAL.

SD-21 TRACER WIRE DETAIL
NOT TO SCALE

GENERAL NOTES:
1. NO EXCAVATED MATERIAL SHALL BE PLACED IN ANY STREAM, DITCH OR DRAINAGE-WAY.
2. THE CONTRACTOR IS RESPONSIBLE FOR LOCATING ALL UNDERGROUND UTILITIES BEFORE ANY CONSTRUCTION BEGINS.
3. THE CONTRACTOR IS RESPONSIBLE FOR TEMPORARY SEDIMENT AND EROSION CONTROL MEASURES WHILE CONSTRUCTION IS IN PROGRESS.
4. THE CONTRACTOR IS RESPONSIBLE FOR STABILIZATION OF ALL DISTURBED AREAS.
5. THE CONTRACTOR IS RESPONSIBLE FOR LAY DOWN AND STOCKPILE AREAS (TO ARRANGE AND ENSURE COMPLIANCE WITH ALL LOCAL AND STATE REGULATIONS).

THE DETAILS SHOWN HEREON SUPERCEDE CFPUA WRITTEN TECHNICAL SPECIFICATIONS VERSIONS 1.00 - 1.04

REV:	DESCRIPTION:	DATE:
1	ADDED NOTES TO THE STRUCTURAL BRIDGING DETAIL	03/11/15
2	Revised Tracer Wire Detail	10/20/15
3	Revised Force Main Ditch and Storm Drain Crossing Detail	02/15/16

CFPUA SANITARY SEWER

STANDARD DETAILS

CAPE FEAR PUBLIC UTILITY AUTHORITY
235 GOVERNMENT CENTER DRIVE
WILMINGTON, NC 28403
OFFICE: (910)332-6560
Stewardship. Sustainability. Service.

DATE: 1/9/12
SCALE: N/A
DRAWN BY: CFPUA
CHECKED BY: CFPUA
PROJECT NO. :

SHEET NO: SSD-3

STORMWATER MANAGEMENT PLAN
APPROVED
CITY OF WILMINGTON
ENGINEERING DEPARTMENT
DATE _____ PERMIT #_____
SIGNED_____

Approved Construction Plan
Name Date
Planning_____
Traffic_____
Fire_____

For each open utility cut of City streets, a $325 permit shall be required from the City prior to occupancy and/or project acceptance.

2 STD CFPUA DETAILS

1 APPROVALS

DMA Architecture PLLC
380-H Knollwood Street, Suite 174
Winston-Salem, NC 27103
phone: 336-723-6360
dishnermoore.com

McKIM&CREED
243 North Front Street
Wilmington, North Carolina 28401
Phone: (910)343-1048 , Fax: (910)251-8282
www.mckimcreed.com

revisions:
A - CITY OF WILMINGTON TRC SUBMITTAL 06/29/16

RIVERPLACE
(Water Street Parking Deck Redevelopment)
Block 190, City of Wilmington
Wilmington Township
New Hanover County, NC 28412

date: 06-29-16
job no. MCE 0205-0001

© 2016 DMA Architecture PLLC

NORTH CAROLINA SEAL 022574 ENGINEER RICHARD M. COLLIER 06/29/2016

CFPUA
UTILITY DETAILS

CU-503

S:\0205\0001\00-Drawings\CU\SD1_0205D001.dwg, 6/29/2016 12:06:45 PM, CHunsey, 11

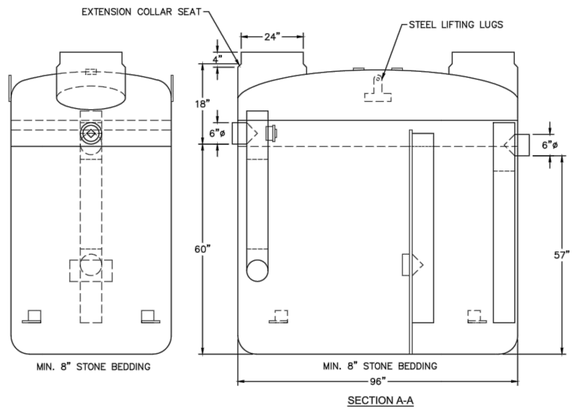

SECTION A-A

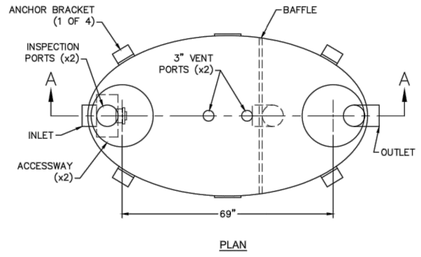

PLAN

NOTES:
1. FOR GRAVITY APPLICATIONS ONLY.
2. MIN. THICKNESS: 1/4" WALL AND 3/8" TOP AND BOTTOM BOWLS.
3. STANDARD PIPE STUBS ARE SOCKET SDR 35 PVC.
4. EXTENSION COLLARS SHALL BE CAULKED WITH SIKAFLEX OR EQUIVALENT FOR WATERTIGHT SEAL.
5. FOLLOW MANUFACTURE'S SPECS FOR TRAFFIC OR PEDESTRIAN LOADING.

SD-22 FIBERGLASS GREASE INTERCEPTOR
NOT TO SCALE

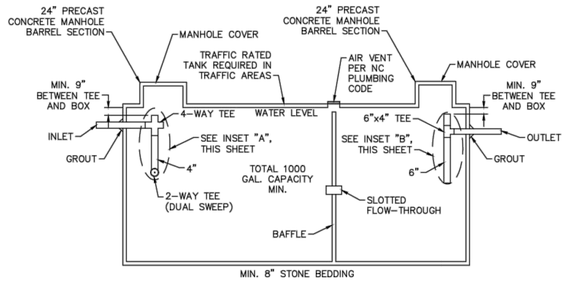

PLAN

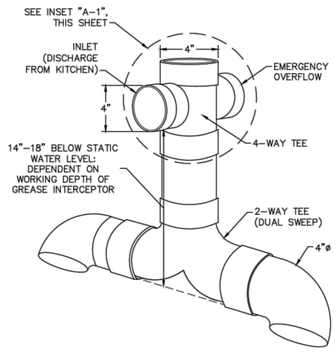

GREASE INTERCEPTOR INSET "A"
4" SANITARY TEE

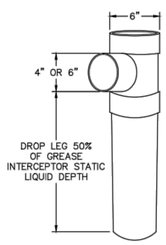

GREASE INTERCEPTOR INSET "B"
6" x 6" x 4" OUTLET
SANITARY TEE

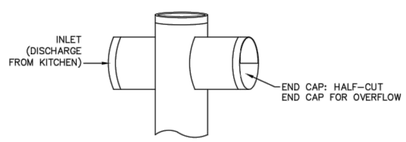

GREASE INTERCEPTOR INSET "A-1"
EMERGENCY OVERFLOW CLOSE-UP

SD-23 CONCRETE GREASE INTERCEPTOR
NOT TO SCALE

GENERAL NOTES:
1. NO EXCAVATED MATERIAL SHALL BE PLACED IN ANY STREAM, DITCH OR DRAINAGE-WAY.
2. THE CONTRACTOR IS RESPONSIBLE FOR LOCATING ALL UNDERGROUND UTILITIES BEFORE ANY CONSTRUCTION BEGINS.
3. THE CONTRACTOR IS RESPONSIBLE FOR TEMPORARY SEDIMENT AND EROSION CONTROL MEASURES WHILE CONSTRUCTION IS IN PROGRESS.
4. THE CONTRACTOR IS RESPONSIBLE FOR STABILIZATION OF ALL DISTURBED AREAS.
5. THE CONTRACTOR IS RESPONSIBLE FOR LAY DOWN AND STOCKPILE AREAS (TO ARRANGE AND ENSURE COMPLIANCE WITH ALL LOCAL AND STATE REGULATIONS).

THE DETAILS SHOWN HEREON SUPERCEDE CFPUA WRITTEN TECHNICAL SPECIFICATIONS VERSIONS 1.00 - 1.04

REV:	DESCRIPTION:	DATE:

CFPUA SANITARY SEWER

STANDARD DETAILS

CAPE FEAR PUBLIC UTILITY AUTHORITY
235 GOVERNMENT CENTER DRIVE
WILMINGTON, NC 28403
OFFICE: (910)332-6560
Stewardship. Sustainability. Service.

DATE: 1/9/12
SCALE: N/A
DRAWN BY: CFPUA
CHECKED BY: CFPUA
PROJECT NO. :

SHEET NO: SSD-4

STORMWATER MANAGEMENT PLAN
APPROVED
CITY OF WILMINGTON
ENGINEERING DEPARTMENT
DATE _____ PERMIT #_____
SIGNED_____

Approved Construction Plan
Name Date
Planning_____
Traffic_____
Fire_____

For each open utility cut of City streets, a $325 permit shall be required from the City prior to occupancy and/or project acceptance.

2 STD CFPUA DETAILS

1 APPROVALS

DMA Architecture PLLC
380-H Knollwood Street, Suite 174
Winston-Salem, NC 27103
phone: 336-723-6360
dishmermoore.com

McKIM & CREED
248 North Front Street
Wilmington, North Carolina 28401
Phone: (910)343-1048 , Fax: (910)251-8282
www.mckimcreed.com

revisions:
A - CITY OF WILMINGTON TRC SUBMITTAL 06/29/16

RIVERPLACE
(Water Street Parking Deck Redevelopment)
Block 190, City of Wilmington
Wilmington Township
New Hanover County, NC 28412

date: 06-29-16
job no. MCE 0205-0001

© 2016 DMA Architecture PLLC

NORTH CAROLINA PROFESSIONAL ENGINEER SEAL 022574 RICHARD M. COLLIER 06/29/2016

CFPUA
UTILITY DETAILS

CU-504

S:\0205\0001\Engineering and Design\Drawings\Civil\CU_0205001.dwg, 6/29/2016 12:06:48 PM, CNunley, 1:1
S:\Engineers\2002_Planning and Design Division\Historical\Designs\cad files for sheets\Standard Details\CFPUA Standard Details\CFPUA Sewer Details.dwg, 7/2/2015 1:11:23 PM, johns.scott

NOTES:
1. NO JOINT SHALL BE INSTALLED BETWEEN THE MAIN SERVICE TAP AND THE METER STOP. ALL SERVICES SHALL BE INSTALLED PERPENDICULAR TO MAIN.
2. SERVICE SADDLES ON PVC MAINS SHALL BE WIDE BAND BRASS BODY: SADDLE McDONALD 3801 OR EQUIVALENT.
3. METER BOXES SUSCEPTIBLE TO TRAFFIC SHALL CONFORM TO ASTM A48, CLASS 30B AND AASHTO H20 LOAD RATING STANDARDS (SIP MODEL 4242, OR APPROVED EQUIVALENT).

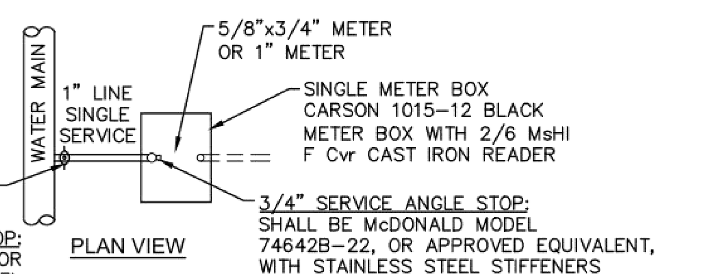

PLAN VIEW

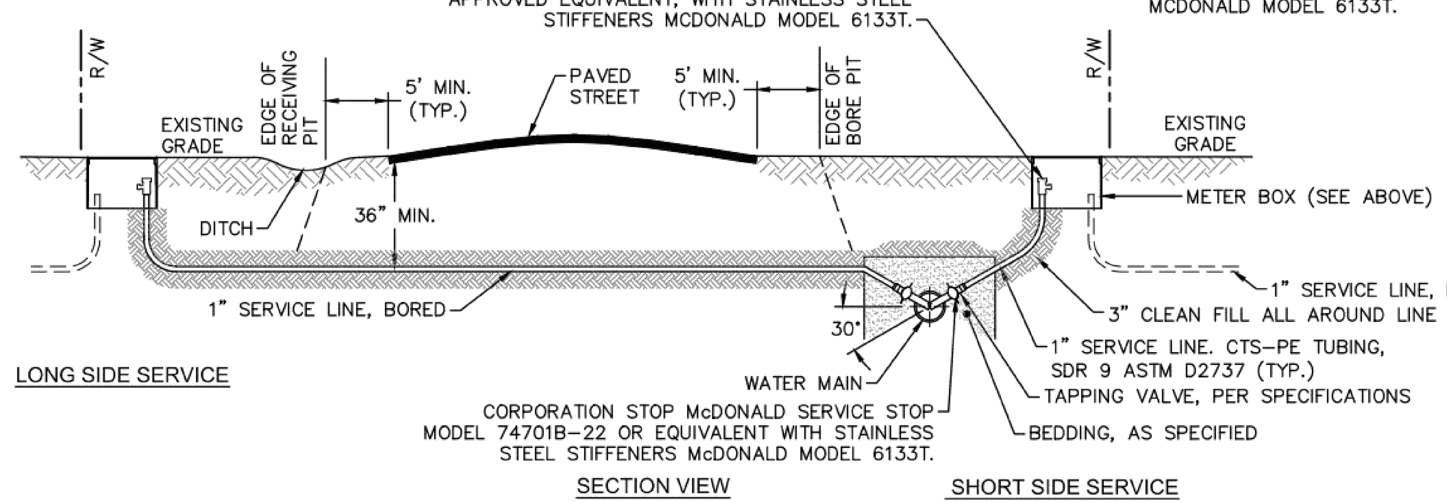

LONG SIDE SERVICE

SECTION VIEW

SHORT SIDE SERVICE

NOTE:
TYPICAL WATER SERVICE CONNECTION FOR RESIDENTIAL SINGLE FAMILY HOME ON CFPUA WATER SYSTEM

WD-18 SINGLE SERVICE CONNECTION
NOT TO SCALE

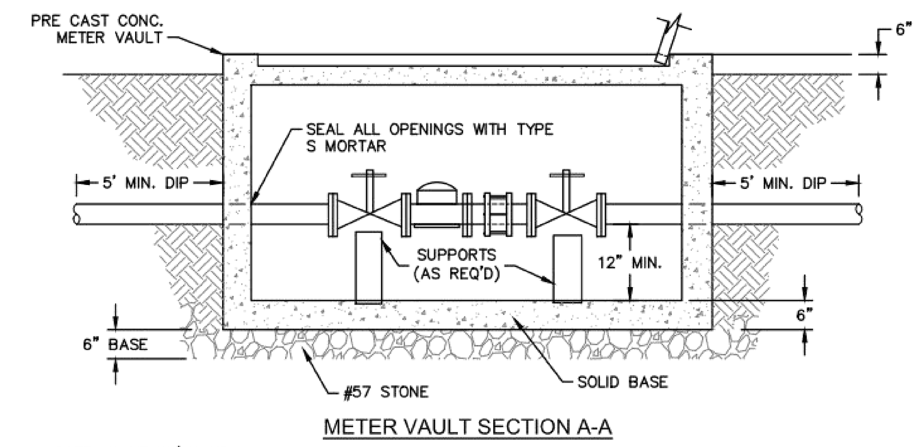

METER VAULT SECTION A-A

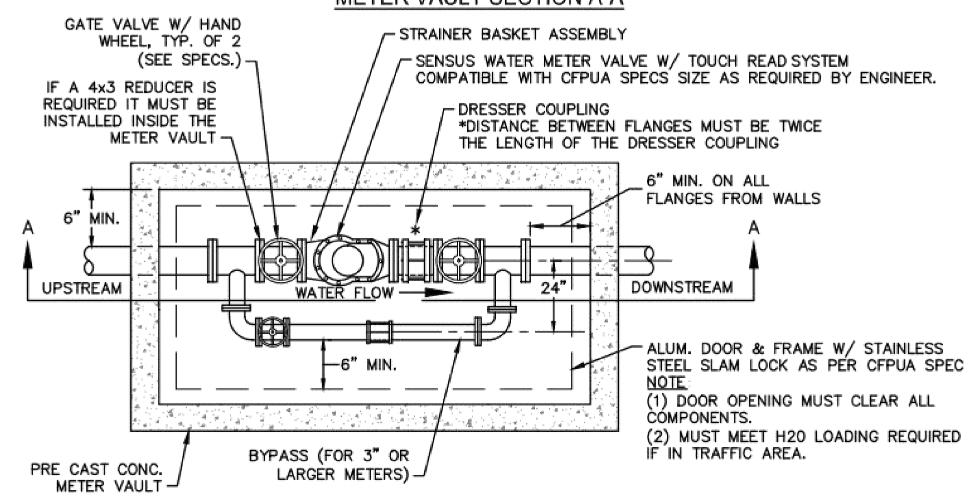

METER VAULT PLAN

FOR WATER METERS LARGER THAN 2"

WD-1 WATER METER VAULT
NOT TO SCALE

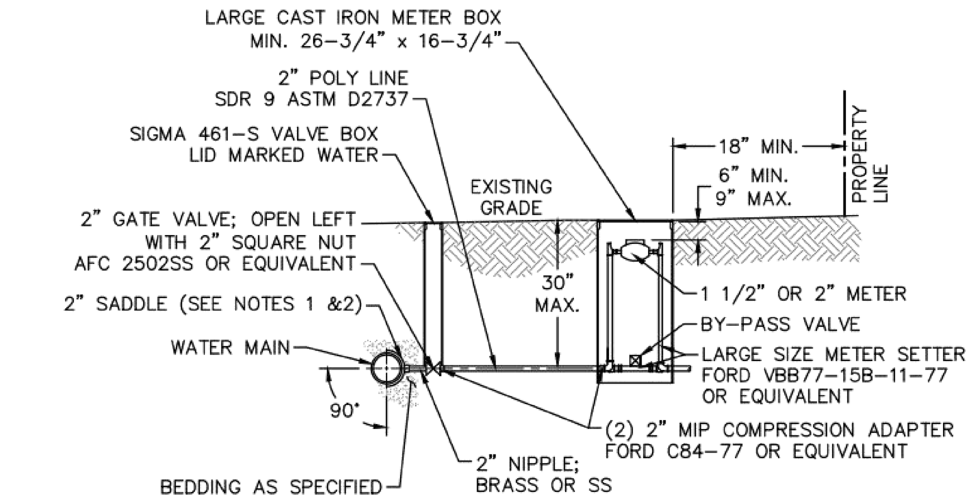

NOTES:
1. ALL SERVICES SHALL BE INSTALLED PERPENDICULAR TO MAIN.
2. SERVICE SADDLES ON PVC MAINS SHALL BE WIDE BAND BRASS BODY: McDONALD 3800, FORD S90 (DOUBLE STRAP) OR EQUIVALENT.
3. METER BOXES SUSCEPTIBLE TO TRAFFIC SHALL CONFORM TO ASTM A48, CLASS 30B AND AASHTO H20 LOAD RATING STANDARDS (OLDCASTLE PRECAST MODEL B1730 OR APPROVED EQUIVALENT).
4. METER BOXES SUSCEPTIBLE TO INCIDENTAL, NON-DELIBERATE TRAFFIC SHALL CONFORM TO ANSI/SCTE 77 TIER 15 LOAD RATING STANDARDS (SYNERTECH MODEL DUO 17x30 OR APPROVED EQUIVALENT).
5. NON-TRAFFIC METER BOXES SHALL BE SIGMA MB2203 OR APPROVED EQUIVALENT.
6. 3" CLEAN FILL REQUIRED ALL AROUND 2" POLY SERVICE LINE.

FOR 1-1/2" OR 2" WATER SERVICES

WD-11 LARGE METER
NOT TO SCALE

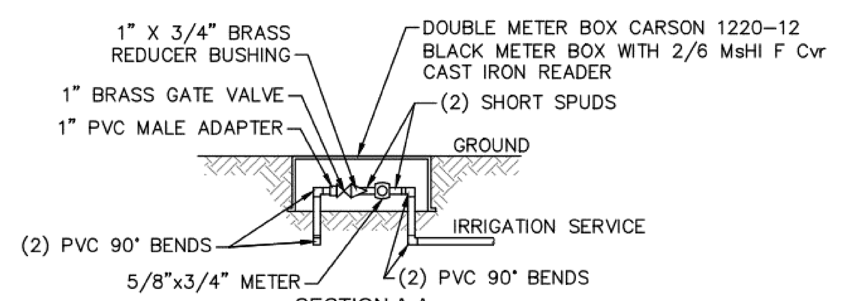

SECTION A-A

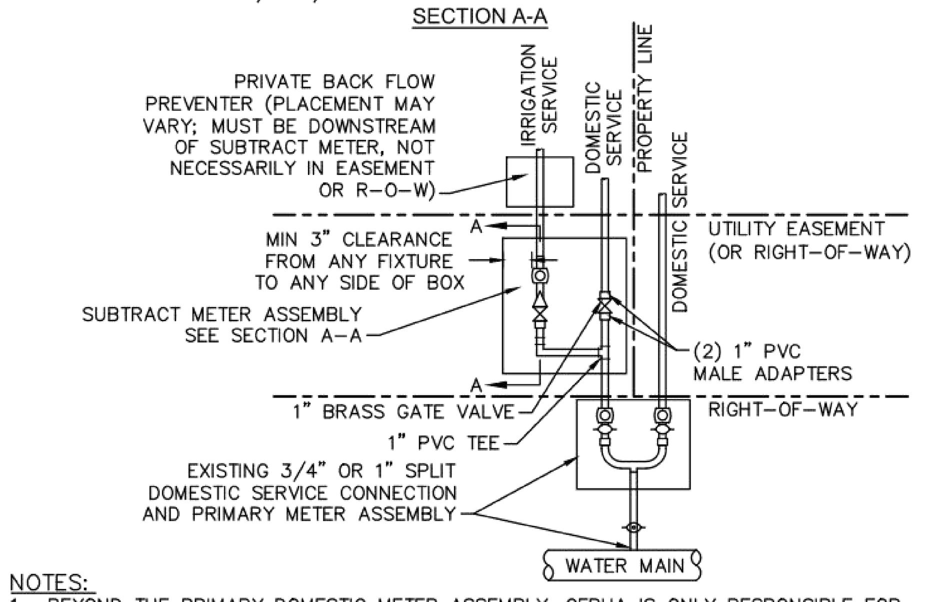

NOTES:
1. BEYOND THE PRIMARY DOMESTIC METER ASSEMBLY, CFPUA IS ONLY RESPONSIBLE FOR METER AND WASHERS OF SUBTRACT METER ASSEMBLY.
2. ALL PIPE AND FITTINGS UP TO FINAL SERVICE LINE TO BE 1" EXCLUDING METERS.

PLAN VIEW

(MULTIPLE DOMESTIC SERVICES PER TAP)

WD-8 DOUBLE SERVICE CONNECTION USING SUBTRACT METER
NOT TO SCALE

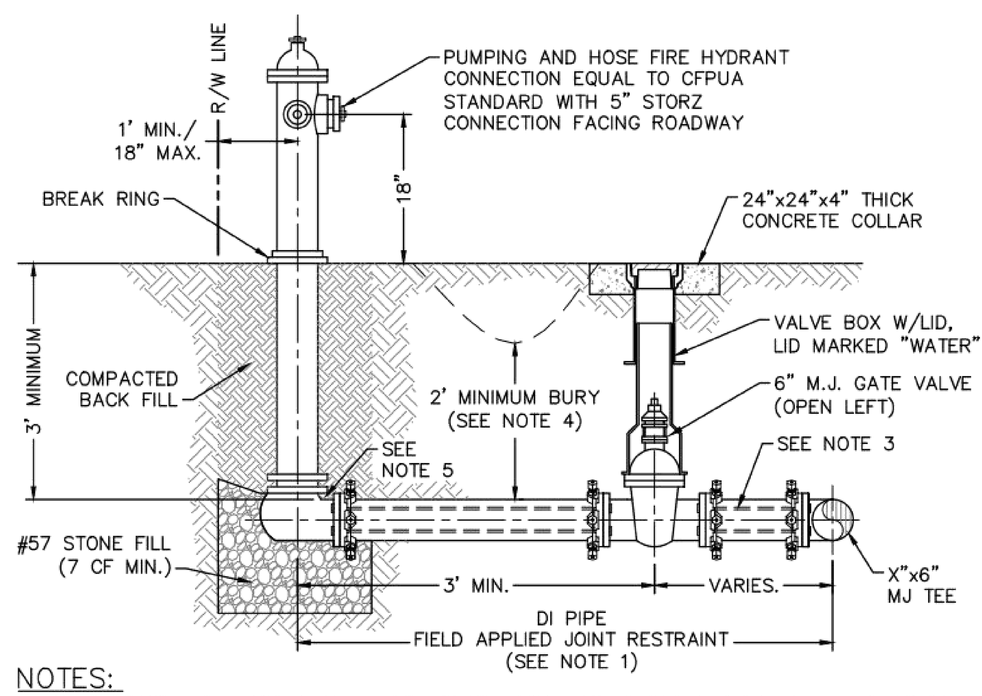

NOTES:
1. JOINT RESTRAINT SYSTEMS SHALL BE WEDGE ACTION STYLE FOR DI PIPE AS MANUFACTURED BY EBAA IRON, SIGMA, STAR PIPE PRODUCTS OR APPROVED EQUAL.
2. WHEN HYDRANT LEGS REQUIRE FULL LENGTH PIPE SECTIONS, OVER BELL RESTRAINT SYSTEM SHALL HAVE 316 STAINLESS STEEL HARNESS AND FASTENERS.
3. CONTINUOUS 316 STAINLESS STEEL RODS (TEE TO VALVE AND VALVE TO HYDRANT) MAY BE USED WITH COR-BLUE MJ T-BOLT AND GASKET KITS, AS AN ALTERNATIVE.
4. HYDRANT AND VALVE SHALL BE PLACED OUTSIDE DITCH LIMITS.
5. WEEP HOLES OPEN AND UNBLOCKED TO DRAIN.

WD-10 FIRE HYDRANT ASSEMBLY
NOT TO SCALE

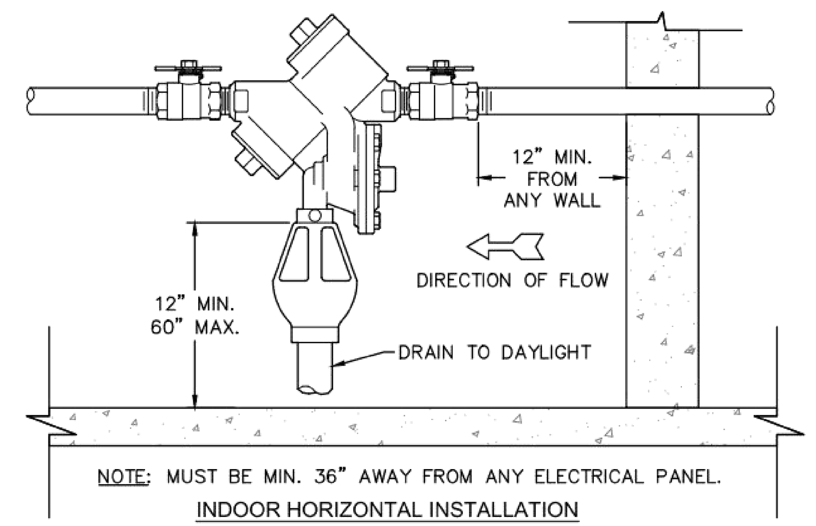

NOTE: MUST BE MIN. 36" AWAY FROM ANY ELECTRICAL PANEL.

INDOOR HORIZONTAL INSTALLATION

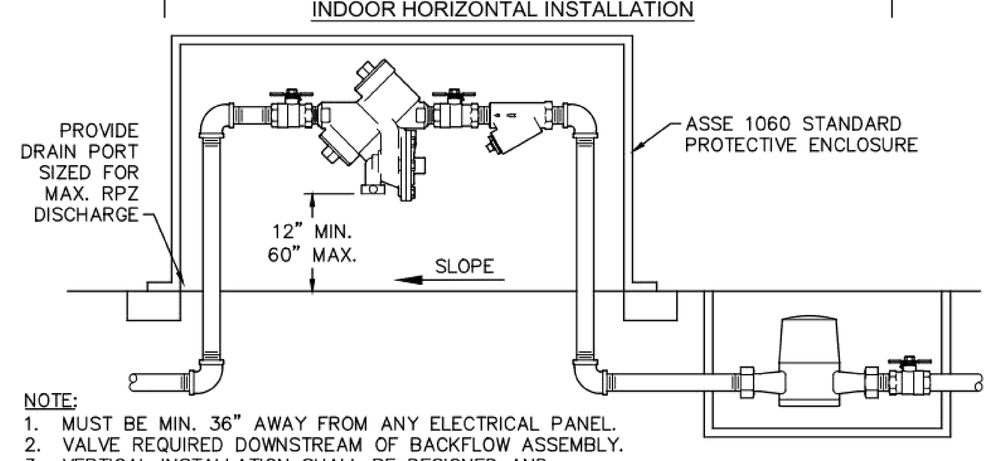

NOTE:
1. MUST BE MIN. 36" AWAY FROM ANY ELECTRICAL PANEL.
2. VALVE REQUIRED DOWNSTREAM OF BACKFLOW ASSEMBLY.
3. VERTICAL INSTALLATION SHALL BE DESIGNED AND SUBMITTED TO CFPUA ESMD FOR APPROVAL.

OUTDOOR HORIZONTAL INSTALLATION

WD-12 REDUCED PRESSURE PRINCIPLE ASSEMBLY
NOT TO SCALE

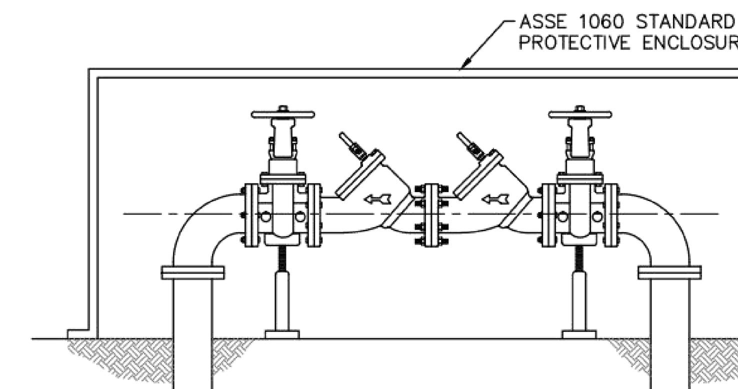

OUTDOOR INSTALLATION

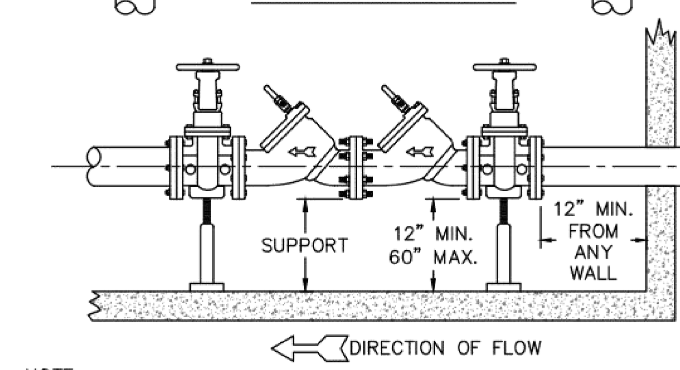

NOTE:
1. MUST BE MIN. 36" AWAY FROM ANY ELECTRICAL PANEL.
2. VALVE REQUIRED DOWNSTREAM OF BACKFLOW ASSEMBLY.
3. VERTICAL INSTALLATION SHALL BE DESIGNED AND SUBMITTED TO CFPUA ESMD FOR APPROVAL

INDOOR INSTALLATION

WD-7 DOUBLE CHECK VALVE ASSEMBLY
NOT TO SCALE

GENERAL NOTES:
1. NO EXCAVATED MATERIAL SHALL BE PLACED IN ANY STREAM, DITCH OR DRAINAGE-WAY.
2. THE CONTRACTOR IS RESPONSIBLE FOR LOCATING ALL UNDERGROUND UTILITIES BEFORE ANY CONSTRUCTION BEGINS.
3. THE CONTRACTOR IS RESPONSIBLE FOR TEMPORARY SEDIMENT AND EROSION CONTROL MEASURES WHILE CONSTRUCTION IS IN PROGRESS.
4. THE CONTRACTOR IS RESPONSIBLE FOR STABILIZATION OF ALL DISTURBED AREAS.
5. THE CONTRACTOR IS RESPONSIBLE FOR LAY DOWN AND STOCKPILE AREAS (TO ARRANGE AND ENSURE COMPLIANCE WITH ALL LOCAL AND STATE REGULATIONS).

THE DETAILS SHOWN HEREON SUPERCEDE CFPUA WRITTEN TECHNICAL SPECIFICATIONS VERSIONS 1.00 - 1.04

CAPE FEAR PUBLIC UTILITY AUTHORITY STANDARD NOTES:

1. SEWER GUARDS REQUIRED AT ALL MANHOLES. STAINLESS STEEL SEWER GUARDS REQUIRED AT MANHOLES LOCATED IN TRAFFIC AREAS.
2. WATER AND SEWER SERVICES SHALL BE PERPENDICULAR TO MAIN AND TERMINATE AT RIGHT-OF-WAY LINE. SEWER SERVICES IN CUL-DE-SACS ARE REQUIRED TO BE PERPENDICULAR, OR MUST ORIGINATE IN END OF LINE MANHOLE AND TERMINATE AT RIGHT-OF-WAY LINE.
3. ALL SERVICES TYING INTO DUCTILE IRON MAINS SHALL BE CONSTRUCTED OF CLASS 50, DIP, WITH PROTECTO 401 CERAMIC EPOXY LINING.
4. MINIMUM 10' UTILITIES EASEMENT PROVIDED ALONG THE FRONTAGE OF ALL LOTS AND AS SHOWN FOR NEW DEVELOPMENTS.
5. NO FLEXIBLE COUPLINGS SHALL BE USED.
6. ALL STAINLESS STEEL FASTENERS SHALL BE 316.
7. CLEANOUTS SHALL BE LOCATED A MINIMUM OF 12 FEET FROM ALL PROPERTY CORNERS. WATER METER BOXES ARE TO BE A MINIMUM OF 5 FEET FROM THE PROPERTY CORNER.

WD-19 STANDARD NOTES
(REQUIRED ON ALL PLAN AND PROFILE SHEETS)

REV:	DESCRIPTION:	DATE:
1	Single Service Connection, Double Service Connection, and Large Meter Revised	10/26/12
2	Single Service Connection and Fire Hydrant Details Revised	7/23/13
3	Fire Hydrant Detail Revised	01/03/14
4	Revised Fire Hydrant Assembly To Show 5" STORZ Connection	04/10/15
5	Revised Fire Hydrant Assembly To Show Full DIP Hydrant Leg	01/19/16
6	Revised Water Meter Vault and Large Meter Details, Added Standard Notes	02/15/16

CFPUA WATER DISTRIBUTION SYSTEM

STANDARD DETAILS

CAPE FEAR PUBLIC UTILITY AUTHORITY
235 GOVERNMENT CENTER DRIVE
WILMINGTON, NC 28403
OFFICE: (910)332-6560
Stewardship. Sustainability. Service.

DATE: 1/9/12
SCALE: N/A
DRAWN BY: CFPUA
CHECKED BY: CFPUA
PROJECT NO. :

SHEET NO: WSD-1

S:\Engineers\CFPUA Standard Details\CAD Files\CFPUA-Water Details.dwg, 2/15/2016 3:31:12 PM, john.scott

STORMWATER MANAGEMENT PLAN
APPROVED
CITY OF WILMINGTON
ENGINEERING DEPARTMENT
DATE ________ PERMIT #______
SIGNED____________________

Approved Construction Plan

	Name	Date
Planning		
Traffic		
Fire		

For each open utility cut of City streets, a $325 permit shall be required from the City prior to occupancy and/or project acceptance.

2 STD CFPUA DETAILS

1 APPROVALS

A B C D E F G H

1 2 3 4 5 6 7 8 9 10 11 12

DMA Architecture PLLC
380-H Knollwood Street, Suite 174
Winston-Salem, NC 27103
phone: 336-723-6360
dishnermoore.com

McKIM&CREED
243 North Front Street
Wilmington, North Carolina 28401
Phone: (910)343-1048 , Fax: (910)251-8282
www.mckimcreed.com

revisions:
A - CITY OF WILMINGTON TRC SUBMITTAL 06/29/16

RIVERPLACE
(Water Street Parking Deck Redevelopment)

Block 190, City of Wilmington
Wilmington Township
New Hanover County, NC 28412

date: 06-29-16
job no. MCE 0205-0001

© 2016 DMA Architecture PLLC

CFPUA
UTILITY DETAILS

CU-505

S:\0205\0001\80-Drawings\CU501_02050001.dwg, 6/29/2016 12:06:50 PM, CNursey, 1:1

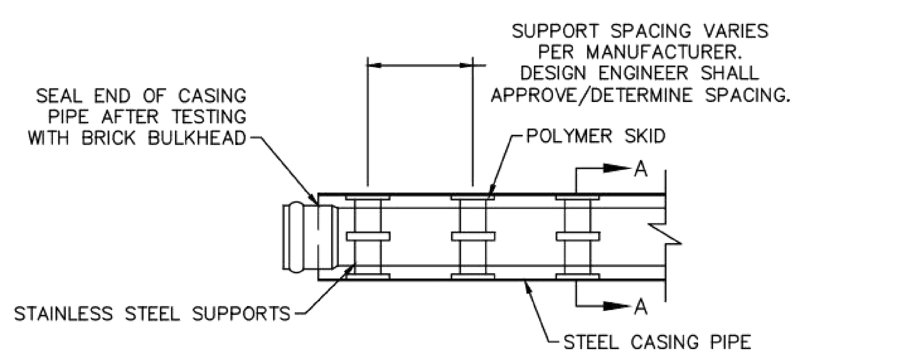

NOTE: PIPE SUPPORT TO BE PLACED TO PROVIDE PROPER SUPPORT, ALIGNMENT, AND GRADE AS SPECIFIED. CONTINUOUS SUPPORTS MAY BE USED AS ALTERNATIVE. OIL, GREASE, OR PETROLEUM PRODUCT MAY NOT BE USED AS LUBRICANT.

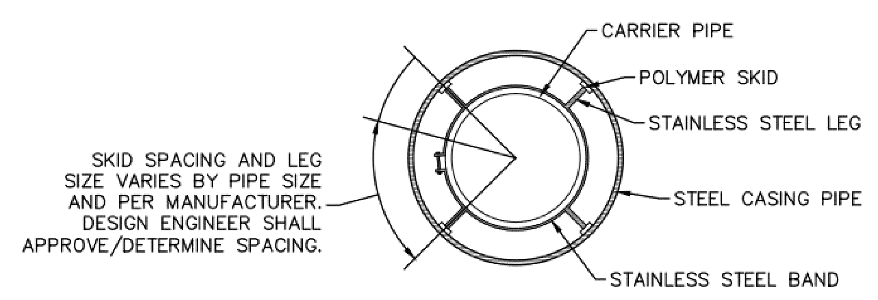

NOTE: ALL STAINLESS STEEL PARTS TO BE 316 SST.

WD-15 PIPE CASING SUPPORT DETAIL
NOT TO SCALE

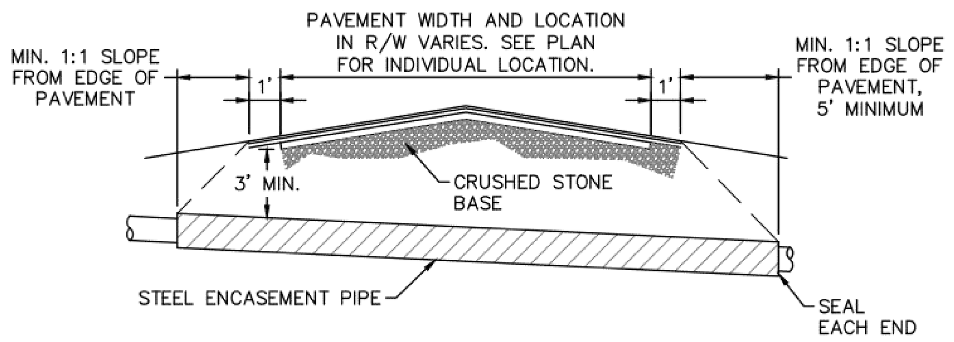

NOTES:
1. CASING WILL BE INSTALLED AT LINE AND GRADE SHOWN ON INDIVIDUAL PROFILE FOR EACH CROSSING. BORING/JACKING TO LINE AND GRADE IS REQUIRED.
2. TRACER WIRE SHALL BE CONTINUED THROUGH CASING.

WD-16 TYPICAL BORING/ JACKING DETAIL
NOT TO SCALE

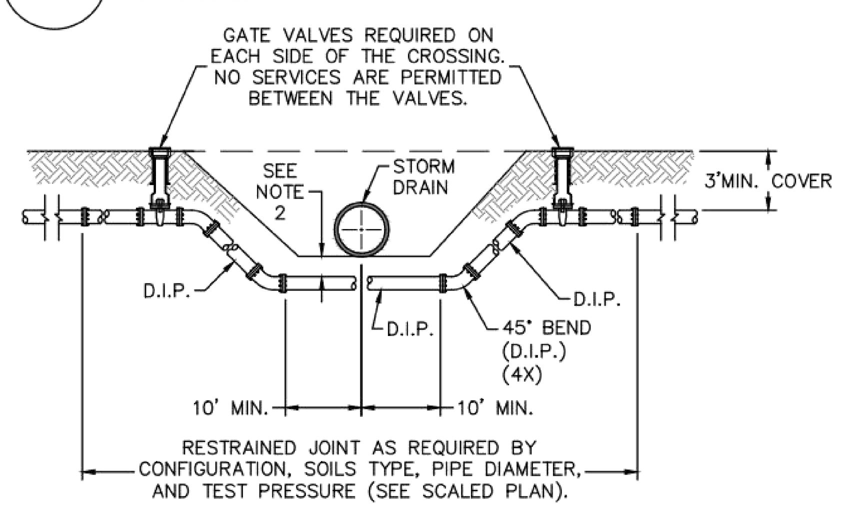

NOTES:
1. USE PRESSURE CLASS 350 DIP, UNLESS SPECIFIED OTHERWISE.
2. MINIMUM DEPTH REQUIRED, UNLESS SPECIFIED OTHERWISE BY CFPUA:
   a. IN DOT R/W, 36" MIN. TYPICAL, OR 24" MIN. WHEN CROSSING A DITCH LINE.
   b. ALL OTHER LOCATIONS, 30" MIN.
   c. WHEN STORM DRAIN INVERT IS BURIED AT OR BELOW ABOVE DEPTHS, 18" MIN. CLEARANCE IS REQUIRED.

WD-2 WATER MAIN DITCH AND STORM DRAIN CROSSING
NOT TO SCALE

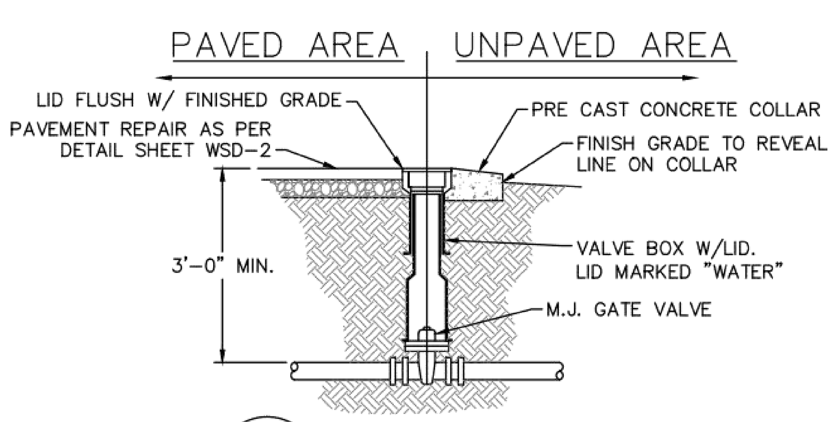

WD-3 VALVE DETAIL
NOT TO SCALE

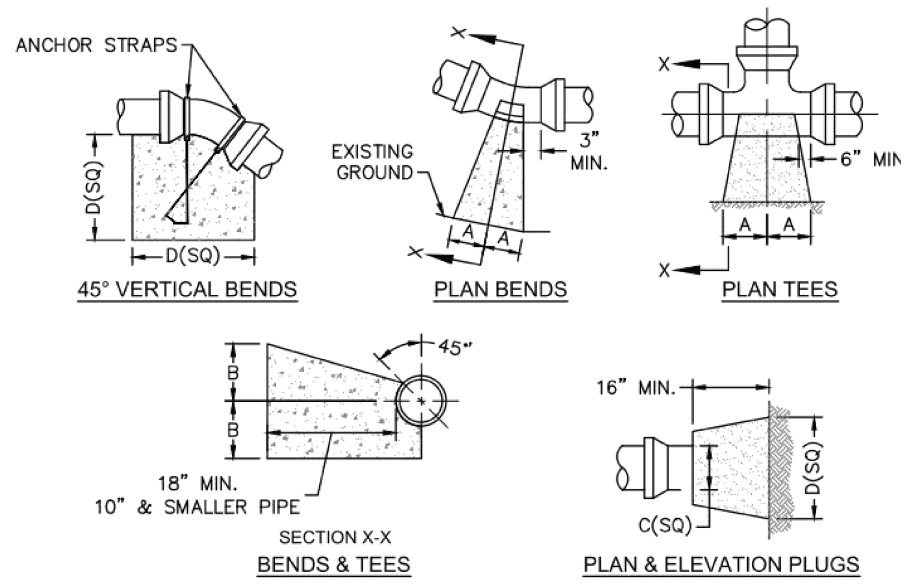

SIZE	90 BENDS		45 BENDS		22-1/2 BENDS		TEES/PLUGS		45 VERT. BENDS
	A	B	A	B	A	B	A	B	
3"	8"	6"	5"	6"	3"	7"	6"	8"	27"
4"	8"	9"	5"	8"	3"	11"	6"	9"	28"
6"	14"	11"	9"	9"	8"	8"	12"	9"	36"
8"	16"	16"	12"	12"	10"	13"	14"	13"	42"
10"	18"	22"	15"	14"	14"	16"	18"	15"	50"
12"	20"	28"	18"	17"	16"	16"	22"	18"	62"
14"	26"	29"	21"	19"	18"	18"	26"	20"	72"
16"	33"	29"	25"	21"	20"	21"	32"	21"	83"
18"	40"	30"	28"	24"	22"	23"	36"	24"	88"

NOTES:
1. BASED ON 160 PSI TEST PRESSURE AND 2000 PSF SOIL BEARING CAPACITY.
2. ALL BEARING SURFACES TO BE CARRIED TO UNDISTURBED GROUND.
3. USE MEG-A-LUG (PREFERRED) IN LIEU OF BLOCKING AND RODDING.

WD-4 THRUST BLOCK DETAIL
NOT TO SCALE

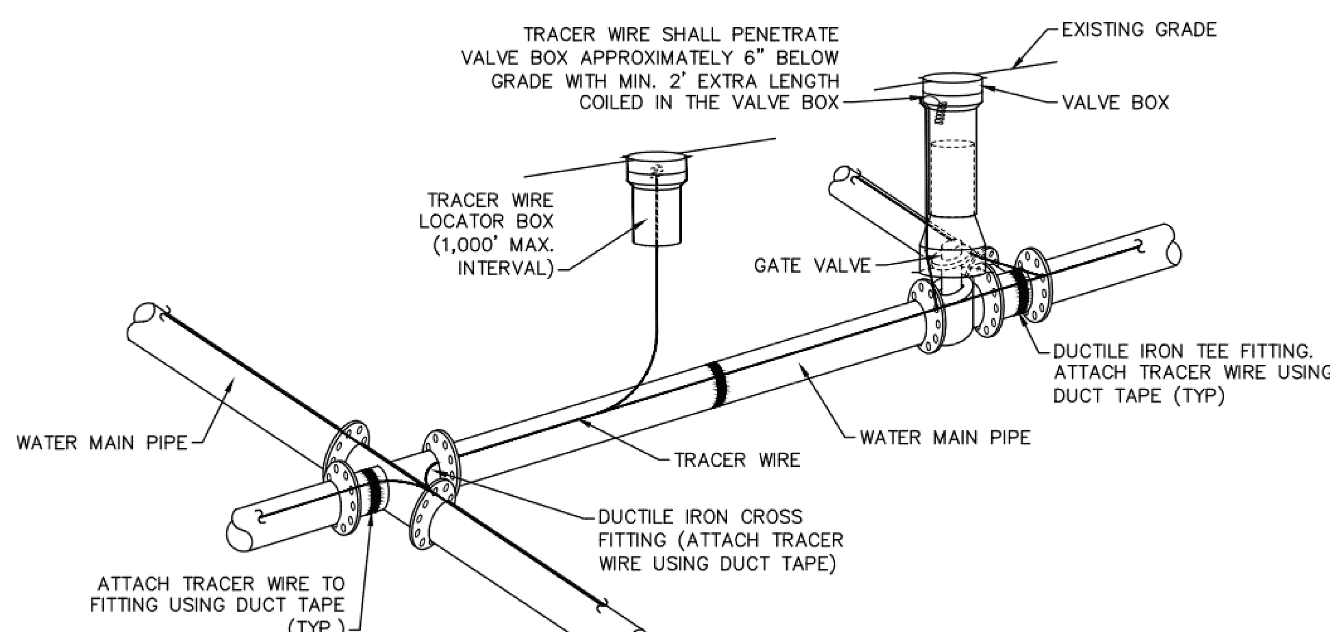

NOTES:
1. TRACER WIRE SHALL BE #10 COPPER SOLID CORE COPPER WIRE WITH GAS AND OIL RESISTANT INSULATION.
2. WIRE SHALL BE STRAPPED TO ALL PVC WATER MAIN PIPING WITH DUCT TAPE AT 12 FOOT INTERVALS ALONG THE PIPE.
3. SECURE WIRE TO ALL TEE AND CROSS FITTINGS WITH DUCT TAPE.
4. ALL SPLICES IN THE WIRE SHALL BE MADE WITH 3M DBR DIRECT BURY SPLICE KIT AN UNDERGROUND RATED, WATERTIGHT, AND APPROVED SPLICE CONNECTOR OR APPROVED EQUAL.

WD-17 TRACER WIRE DETAIL
NOT TO SCALE

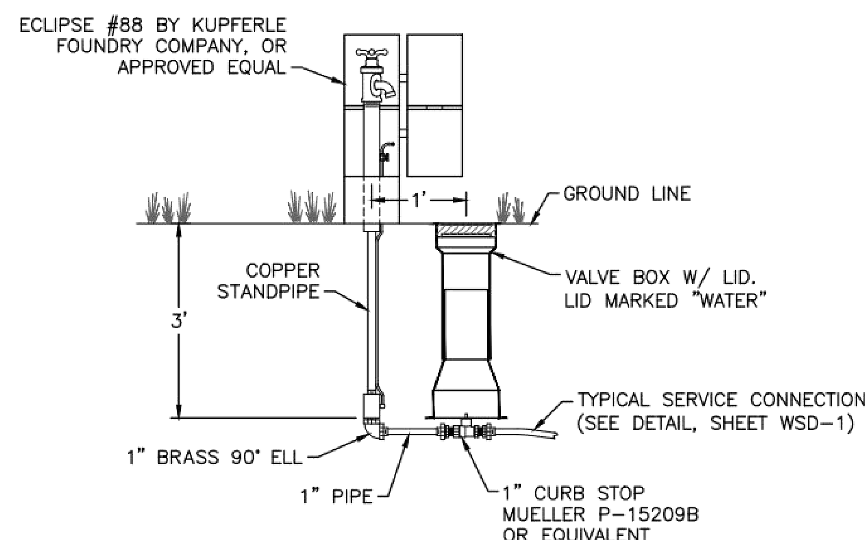

WD-6 SAMPLING STATION
NOT TO SCALE

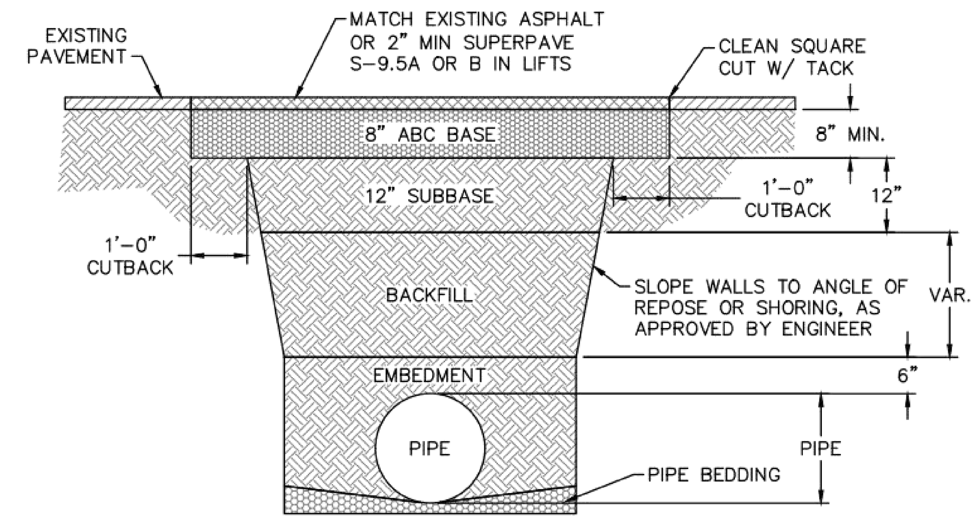

NOTES:
1. BACKFILL SHALL BE SUITABLE MATERIAL THAT IS FREE FROM HEAVY CLAY, GUMBOS, DEBRIS, ORGANICS AND LITTLE TO NO EXCESSIVE MOISTURE.
2. SELECT BACKFILL MAY BE SUBSTITUTED OR REQUIRED BY CITY TO ACHIEVE COMPACTION, (I.E. #57, ABC, CRUSHED LIMESTONE, CLEAN SAND, FLOWABLE FILL, ETC).
3. 8-INCH OF ABC BASE MATERIAL SHALL BE USED ON CITY STREETS.
4. BACKFILL AND BASE MATERIALS SHALL BE COMPACTED 12" MINIMUM LIFTS
5. SOIL SHALL BE COMPACTED BY A MECHANIZED TAMPER (I.E JUMPING JACK), HOWEVER, VIBRATORY ROLLERS > 18" WIDTH MAY BE USED FOR LARGER EXCAVATIONS. THE PLATE TAMP METHOD SHALL NOT BE USED.
6. ALL APPROVED CASTINGS SHALL BE SET FLUSH TO GRADE AND SUPPORTED IF APPLICABLE.
7. ABC BASE AND SUBBASE COMPACTED TO 98% AND BACKFILL AND EMBEDMENT COMPACTED TO 90% AS DETERMINED BY THE MODIFIED PROCTOR AASHTO METHOD T-99.
8. 1-FOOT CUTBACKS OF ASPHALT SHALL BE PREPARED ON UNDISTURBED SOIL. MINIMUM ASPHALT DENSITY IS 90%.

(FOR PRIVATE ROADS AND PAVED AREAS; CONTRACTOR TO MEET MIN. REQUIREMENTS AS DEFINED BY RIGHT-OF-WAY OWNER FOR PUBLIC ROAD REPAIRS)

WD-14 PAVEMENT REPAIR WHERE PIPE INSTALLED
NOT TO SCALE

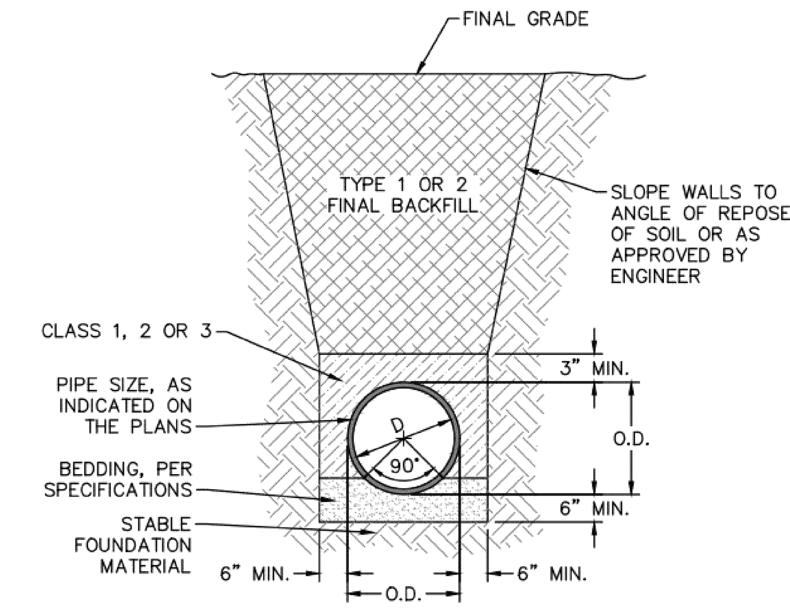

WD-13 TYPICAL TRENCH DETAIL
NOT TO SCALE

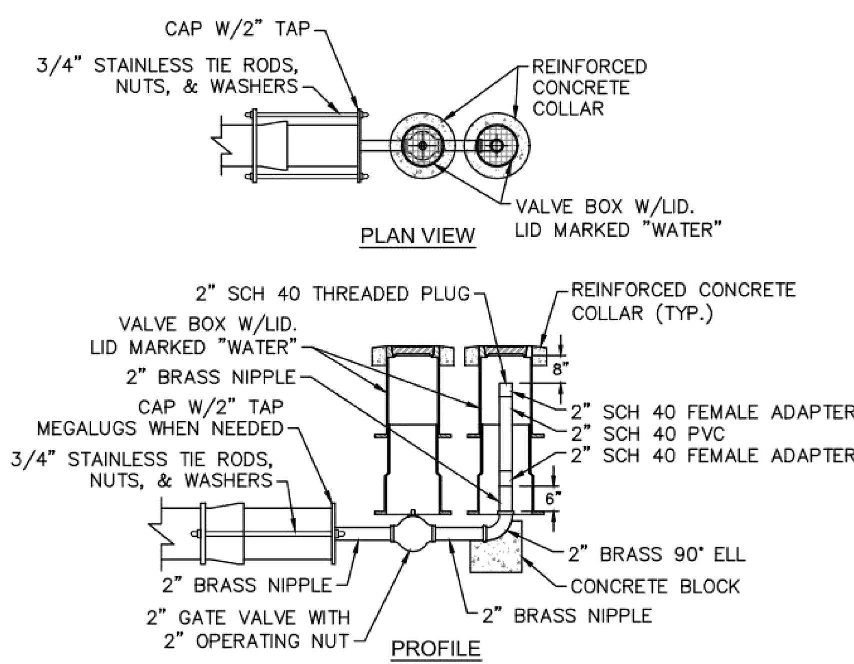

WD-5 2" BLOW-OFF
NOT TO SCALE

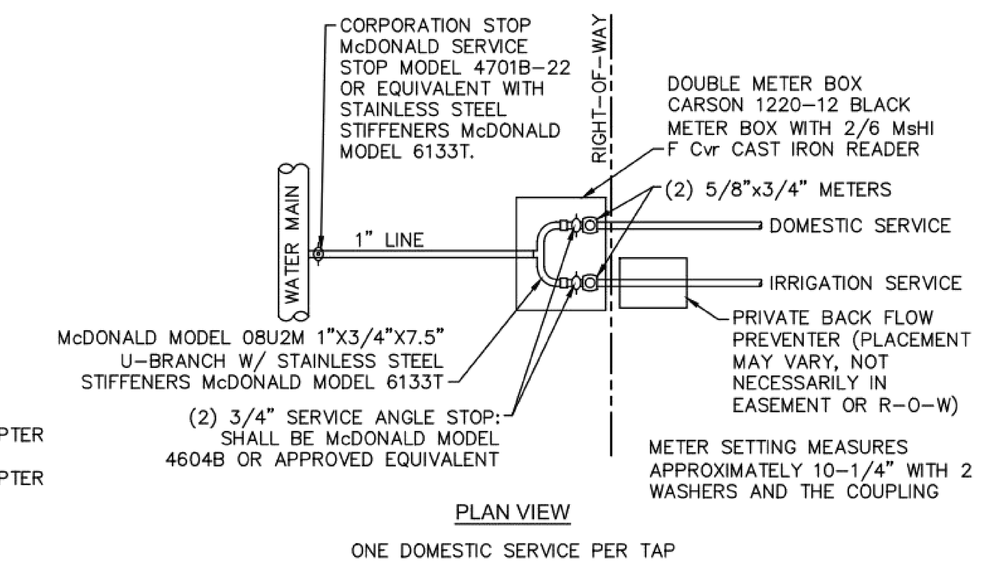

ONE DOMESTIC SERVICE PER TAP

WD-9 DOUBLE SERVICE CONNECTION
NOT TO SCALE

GENERAL NOTES:
1. NO EXCAVATED MATERIAL SHALL BE PLACED IN ANY STREAM, DITCH OR DRAINAGE-WAY.
2. THE CONTRACTOR IS RESPONSIBLE FOR LOCATING ALL UNDERGROUND UTILITIES BEFORE ANY CONSTRUCTION BEGINS.
3. THE CONTRACTOR IS RESPONSIBLE FOR TEMPORARY SEDIMENT AND EROSION CONTROL MEASURES WHILE CONSTRUCTION IS IN PROGRESS.
4. THE CONTRACTOR IS RESPONSIBLE FOR STABILIZATION OF ALL DISTURBED AREAS.
5. THE CONTRACTOR IS RESPONSIBLE FOR LAY DOWN AND STOCKPILE AREAS (TO ARRANGE AND ENSURE COMPLIANCE WITH ALL LOCAL AND STATE REGULATIONS).

THE DETAILS SHOWN HEREON SUPERCEDE CFPUA WRITTEN TECHNICAL SPECIFICATIONS VERSIONS 1.00 - 1.04

REV:	DESCRIPTION:	DATE:
1	Revised Water Main Ditch and Storm Crossing Detail	11/12/13
2	Revised Water Main Ditch and Storm Crossing Detail	05/05/14
3	Revised Tracer Wire Detail	10/20/15
4	Added Backflow Preventer to Double Service Connection Detail	02/01/16
5	Revised Sampling Station Detail	02/15/16

CFPUA WATER DISTRIBUTION SYSTEM

STANDARD DETAILS

CAPE FEAR PUBLIC UTILITY AUTHORITY
235 GOVERNMENT CENTER DRIVE
WILMINGTON, NC 28403
OFFICE: (910)332-6560
Stewardship. Sustainability. Service.

DATE: 1/9/12
SCALE: N/A
DRAWN BY: CFPUA
CHECKED BY: CFPUA
PROJECT NO. :

SHEET NO: WSD-2

S:\Engineers\CFPUA Standard Details\CAD Files\CFPUA-Water Details.dwg, 2/15/2016 3:25:20 PM, john.scott

STORMWATER MANAGEMENT PLAN
APPROVED
CITY OF WILMINGTON
ENGINEERING DEPARTMENT
DATE ________ PERMIT #______
SIGNED____________________

Approved Construction Plan

	Name	Date
Planning		
Traffic		
Fire		

For each open utility cut of City streets, a $325 permit shall be required from the City prior to occupancy and/or project acceptance.

2 STD CFPUA DETAILS
1 APPROVALS

DMA Architecture PLLC
380-H Knollwood Street, Suite 174
Winston-Salem, NC 27103
phone: 336-723-6360
dishnermoore.com

McKIM & CREED
243 North Front Street
Wilmington, North Carolina 28401
Phone: (910)343-1048 , Fax: (910)251-8282
www.mckimcreed.com

revisions:
A - CITY OF WILMINGTON TRC SUBMITTAL 06/29/16

RIVERPLACE
(Water Street Parking Deck Redevelopment)
Block 190, City of Wilmington
Wilmington Township
New Hanover County, NC 28412

date: 06-29-16
job no. MCE 0205-0001
© 2016 DMA Architecture PLLC

SEAL 022574 RICHARD M. COLLIER 06/29/2016

CFPUA
UTILITY DETAILS

CU-506

S:\0205\0001\80-Drawings\CU501_02050001.dwg, 6/29/2016 12:06:54 PM, CNursey, 1:1

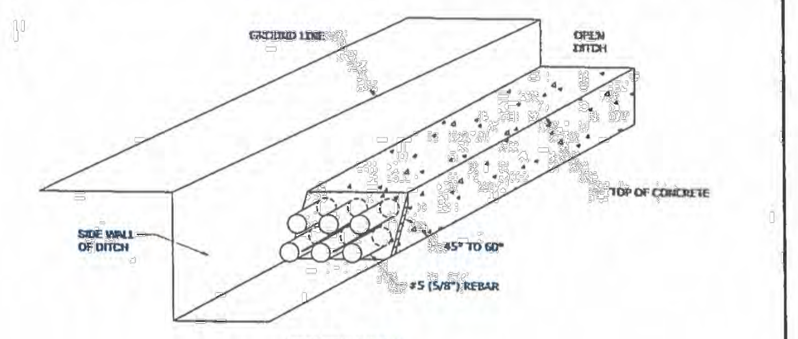

ISOMETRIC VIEW

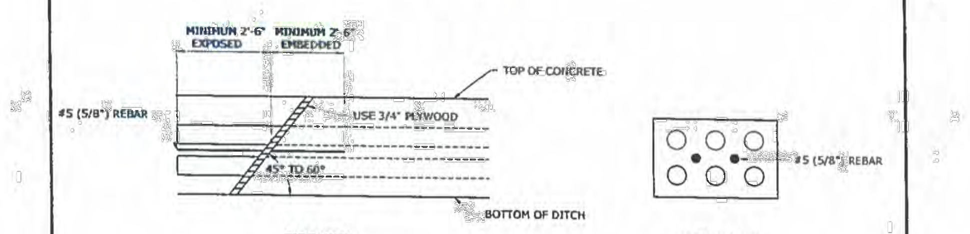

SIDE VIEW

FRONT VIEW

NOTES:

THERE ARE OCCASIONS WHEN PORTIONS OF A CONCRETE POUR FOR A SECTION OF DUCT BANK HAVE TO BE INSTALLED AT DIFFERENT TIMES. THIS COULD OCCUR WHEN DUKE IS INSTALLING A DUCT BANK SECTION AND THE ENTIRE LENGTH CANNOT BE COMPLETED WITHIN ONE DAY. IN THESE SITUATIONS, THE FOLLOWING ACTIONS SHOULD BE TAKEN TO PROVIDE SUPPORT AND A STRONG BOND BETWEEN THE TWO DUCT BANK SECTIONS:

A. THE BARRICADE USED TO CONTAIN THE CONCRETE POUR FOR THE FIRST PORTION OF THE DUCT BANK SHOULD BE ANGLED FROM THE GROUND BACK TOWARD THE AREA BEING POURED. AN ANGLE OF 45 TO 60 DEGREES FROM THE BOTTOM OF THE TRENCH IS REQUIRED. THIS WILL PROVIDE SOME SUPPORT FOR THE CONCRETE THAT WILL BE INSTALLED WHEN THE DUCT BANK IS CONTINUED DURING THE SECOND CONCRETE POUR.
B. FIVE FOOT PIECES OF #5 GALVANIZED REBAR (5/8") SHOULD BE EMBEDDED 2'-6" INTO THE EDGE OF THE FIRST CONCRETE POUR. THIS WILL PROVIDE SUPPORT FOR THE SECOND CONCRETE POUR. INSTALL ONE PIECE OF REBAR ON EACH SIDE OF THE CENTER COLUMN OF CONDUIT ABOVE THE BOTTOM ROW OF CONDUIT AND BELOW THE TOP ROW OF CONDUIT. ONLY TWO PIECES OF REBAR ARE REQUIRED FOR 6 WAY OR LESS DUCT BANK SYSTEMS.
C. BE CERTAIN THAT THE FACE OF THE FIRST CONCRETE POUR IS CLEAN BEFORE MAKING THE SECOND POUR. THIS FACE COULD BECOME CONTAMINATED IN SITUATIONS SUCH AS WHEN IT RAINS BETWEEN POURS AND MUD ATTACHES TO THE FIRST CONCRETE FACE. IF THIS OCCURS, USE A WIRE BRUSH TO REMOVE ANY CONTAMINATION THAT IS PRESENT.
D. CONDUITS SHALL BE CAPPED OR SEALED TO PREVENT DIRT AND DEBRIS FROM ENTERING THE CONDUIT UNTIL THE DUCT BANK IS JOINED.

DUKE ENERGY.

					DEC	DEM	DEP	DEF
3				DUCT BANK JOINTS	X	X	X	X
2					22.06-120			
1								
0	12/31/15	FLETCHER	EANES	ADCOCK				
REVISED	BY	CK'D	APPR.					

9 DUCT BANK JOINTS DETAIL (DUKE ENERGY DETAIL 22.06-120)

7. DUCT SPACERS SHOULD BE INSTALLED APPROXIMATELY EVERY FIVE FEET ALONG THE DUCT BANK ROUTE.

8. LARGE RADIUS BENDS (FIELD BENDS WITH A RADIUS GREATER THAN 35 FEET) CAN BE INSTALLED BY THE GUIDELINES PROVIDED ON DWG. 22.06-118.

9. CONDUITS SHOULD BE PLACED ON SPACERS AND EACH JOINT PREPARED AND CEMENTED ACCORDING TO THE CEMENT MANUFACTURER'S REQUIREMENTS. THE CONDUITS MUST THEN BE SECURED IN POSITION TO PREVENT THEM FROM FLOATING TO THE TOP WHEN CONCRETE IS POURED INTO THE TRENCH. TYPICALLY, THIS IS ACCOMPLISHED BY DRIVING REBAR INTO THE TRENCH WALLS APPROXIMATELY EVERY TEN FEET AS SHOWN IN THE DRAWING BELOW.

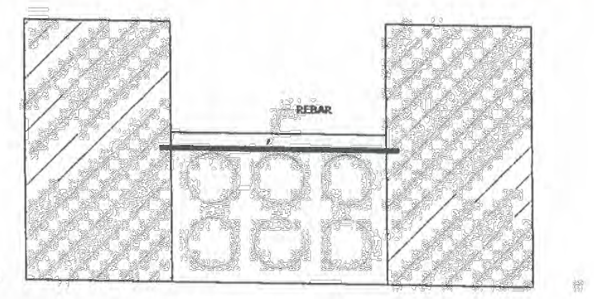

10. READY MIX CONCRETE WITH A MINIMUM 28 DAY COMPRESSIVE STRENGTH OF 3,000 PSI, A 3/8" MAXIMUM AGGREGATE SIZE, WITH A SLUMP OF 5" IS TO BE PLACED INTO THE TRENCH AROUND THE DUCT BANK. THE CONCRETE SHALL BE VIBRATED IN ORDER TO FILL ALL THE SPACES AROUND THE CONDUITS. **THERE MUST BE A MINIMUM OF THREE (3) INCHES OF CONCRETE ENCASEMENT SURROUNDING THE PERIMETER OF THE DUCT BANK.**

11. THE REMAINING TRENCH SHOULD BE BACKFILLED AND PROPERLY COMPACTED WITH EARTH THAT IS FREE OF VEGETATION, LARGE ROCKS, PIECES OF PAVEMENT AND OTHER FOREIGN MATERIAL. CONTROLLED DENSITY BACKFILLS SUCH AS FLOWABLE FILL CAN ALSO BE USED TO FILL IN THE TRENCH ON TOP OF THE DUCT BANK, IF NEEDED, DUE TO COMPACTION REQUIREMENTS AND/OR LOCAL MUNICIPAL GUIDELINES.

12. THERE ARE OCCASIONS WHEN PORTIONS OF A CONCRETE POUR FOR A SECTION OF DUCT BANK HAVE TO BE INSTALLED AT DIFFERENT TIMES. THIS COULD OCCUR WHEN THE CUSTOMER INSTALLS DUCT BANK TO THE PROPERTY LINE AND THEN DUKE EXTENDS THE DUCT BANK TO A MANHOLE AT A LATER TIME. IT ALSO HAPPENS WHEN DUKE IS INSTALLING A DUCT BANK SECTION AND THE ENTIRE LENGTH CANNOT BE COMPLETED WITHIN ONE DAY. WHEN THIS OCCURS, DUCT BANK JOINTS SHOULD BE INSTALLED AS DESCRIBED ON DWG. 22.06-120.

13. FOR ALL NEW DUCT BANK INSTALLATIONS, IT IS REQUIRED TO PULL A SOLID MANDREL THROUGH EACH CONDUIT IN THE DUCT BANK TO VERIFY THAT IT IS IN GOOD CONDITION AND FREE OF ANY OBSTACLES. THE MANDREL SHALL BE NO MORE THAN ONE HALF (1/2) INCH SMALLER THAN THE DIAMETER OF THE CONDUIT. A PULL STRING SHALL BE INSTALLED INSIDE EACH CONDUIT IN THE DUCT BANK. THE PULL STRING SHALL BE MADE FROM HIGH-STRENGTH POLYPROPYLENE OR EQUIVALENT AND BE MILDEW AND ROT RESISTANT. IF THE DUCT BANK IS INSTALLED BY A CUSTOMER, THEY ARE REQUIRED TO CONTACT THE DUKE ENERGY REPRESENTATIVE TO ALLOW THE DUCT BANK TO BE INSPECTED PRIOR TO CONCRETE BEING POURED AND AGAIN UPON COMPLETION OF CONSTRUCTION TO WITNESS THE MANDREL BEING PULLED THROUGH THE CONDUITS. SEE DWG. 22.06-124 FOR THE REQUIRED DUCT BANK INSPECTION CHECKLIST.

DUKE ENERGY.

					DEC	DEM	DEP	DEF
3				DUCT BANK INSTALLATION INSTRUCTIONS	X	X	X	X
2					22.06-116B			
1								
0	12/31/15	FLETCHER	EANES	ADCOCK				
REVISED	BY	CK'D	APPR.					

7 DUCT BANK INSTALLATION (DUKE ENERGY DETAIL 22.06-116B)

DUKE ENERGY UTILIZES A UFER GROUNDING SYSTEM FOR ITS DUCT BANK INSTALLATIONS. AN EXPLANATION OF THIS SYSTEM IS PROVIDED ON DWG. 22.06-112B.

A #2 AWG BARE COPPER GROUND WIRE SHALL BE INSTALLED IN THE CONCRETE OF THE DUCT BANK INSTALLATION FOLLOWING THE INSTRUCTIONS BELOW. A TEN FOOT TAIL OF THE #2 COPPER SHOULD BE LEFT EXPOSED INSIDE EACH VAULT/ MANHOLE WITH THE ENTRY LOCATION GROUTED AND SEALED. A THREE FOOT TAIL SHOULD BE LEFT AT HAND HOLES.

1. INSTALL THE BOTTOM SPACERS AND THE BOTTOM ROW OF PVC CONDUITS IN THE TRENCH.

2. INSTALL THE #2 COPPER GROUND WIRE ALTERNATING THE WIRE FROM POSITION "A" TO POSITION "B" IN THE CONDUIT SPACERS. THE #2 COPPER GROUND WIRE SHOULD BE SAGGED WITH A MINIMUM TWO INCH CLEARANCE FROM THE BOTTOM OF THE TRENCH. REFER TO FIGURE 1 BELOW FOR DETAILS.

3. IF THE COPPER GROUND WIRE HAS TO BE SPLICED IN THE DUCT BANK BETWEEN MANHOLES, A COMPRESSION TYPE COPPER CONNECTOR OR EXOTHERMIC WELD SHALL BE USED.

4. INSTALL THE REMAINING SPACERS AND PVC CONDUITS AS SHOWN BELOW.

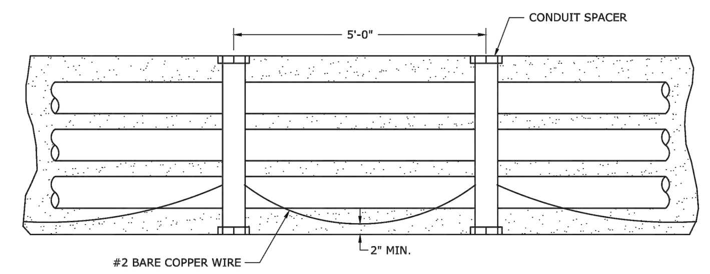

FIGURE 1

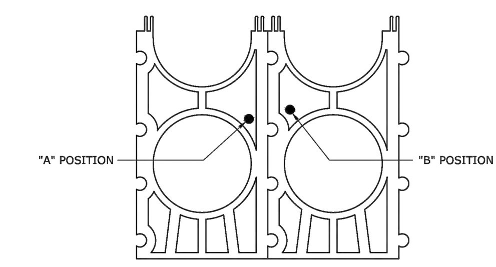

GROUND WIRE IN DUCT BANK

DUKE ENERGY.

					DEC	DEM	DEP	DEF
3				DUCT BANK GROUNDING	X	X	X	X
2					22.06-112A			
1								
0	12/31/15	FLETCHER	EANES	ADCOCK				
REVISED	BY	CK'D	APPR.					

5 DUCT BANK GROUNDING DETAIL (DUKE ENERGY DETAIL 22.06-112A)

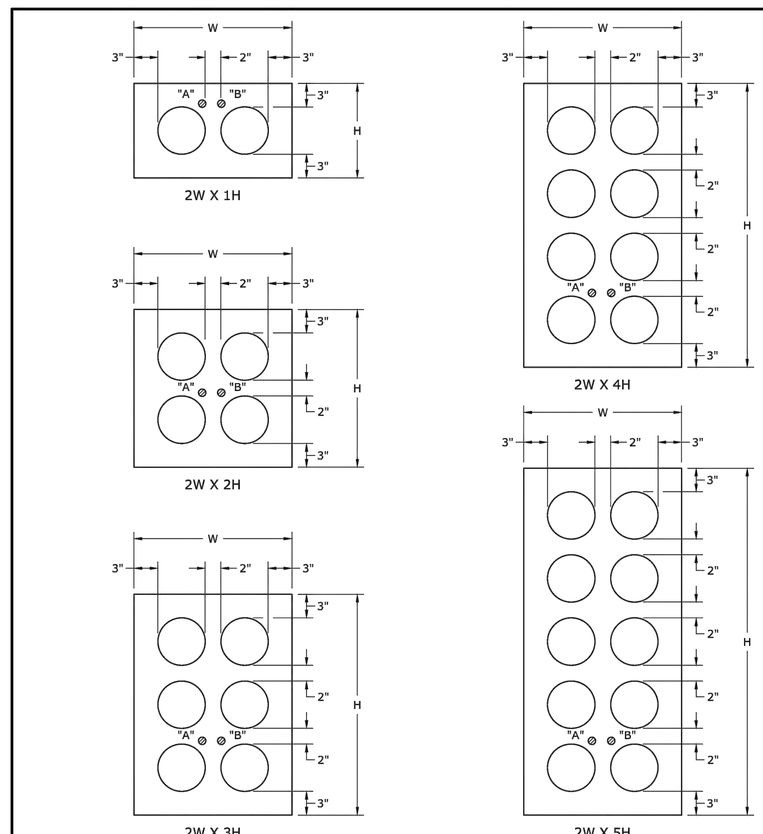

TWO COLUMN DUCT BANK OUTSIDE DIMENSIONS						
CONDUIT SIZE	DUCT WIDTH (W)	DUCT HEIGHT (H)				
		1 ROW	2 ROWS	3 ROWS	4 ROWS	5 ROWS
4"	17-1/4"	10-1/2"	17-1/4"	23-7/8"	30-1/2"	37-1/8"
5"	19-3/8"	11-1/2"	19-5/16"	27"	34-11/16"	42-3/8"
6"	21-1/2"	12-3/4"	21-3/8"	30"	38-5/8"	47-1/4"

CUBIC YARDS OF CONCRETE REQUIRED PER FOOT OF TWO COLUMN DUCT BANKS					
CONDUIT SIZE	DUCT HEIGHT (H)				
	1 ROW	2 ROWS	3 ROWS	4 ROWS	5 ROWS
4"	0.03841	0.06018	0.08140	0.10261	0.12383
5"	0.04487	0.07136	0.09723	0.12310	0.14898
6"	0.05278	0.08275	0.11273	0.14270	0.17267

NOTES:

1. SEE DWG. 22.06-112A FOR GROUNDING REQUIREMENTS.

2. "⊘" INDICATES THE END VIEW OF THE #2 BARE COPPER WIRE.

3. ALTERNATE THE POSITION OF THE #2 BARE COPPER WIRE FROM "A" TO "B" IN THE CONDUIT SPACERS.

DUKE ENERGY.

					DEC	DEM	DEP	DEF
3				DUCT BANK CONFIGURATIONS TWO WIDE	X	X	X	X
2					22.06-102			
1								
0	12/31/15	FLETCHER	EANES	ADCOCK				
REVISED	BY	CK'D	APPR.					

3 DUCT BANK CONFIGURATION DETAIL (DUKE ENERGY DETAIL 22.06-102)

- EACH CONDUIT RUN SHALL BE AS STRAIGHT AS POSSIBLE. THE TOTAL ANGULAR DEFLECTION OF ALL BENDS IN A CONDUIT RUN SHALL NOT EXCEED 180 DEGREES UNLESS PULLING CALCULATIONS ARE MADE AND THEY VERIFY THAT NO PROBLEM WILL BE ENCOUNTERED. INFORMATION REGARDING CABLE PULLING SOFTWARE MAY BE FOUND ON DWG. 22.07-114.
- ENGINEERS MUST BE CAREFUL TO LIMIT THE OVERALL LENGTH OF CONDUIT RUNS. PERFORM CABLE PULLING CALCULATIONS FOR ALL RUNS GREATER THAN 450 FEET BETWEEN TERMINATION POINTS.
- THE PROJECT ENGINEER SHOULD CONSIDER MANY FACTORS WHEN DETERMINING THE LOCATION OF MANHOLES, HANDHOLES, EQUIPMENT, AND RISER POLES. FOR EXAMPLE, IT IS A GOOD PRACTICE TO KEEP RISER POLES CLOSE TO A MANHOLE TO ALLOW FUTURE EXPANSION OF THE SYSTEM AND INSTALLATION OF CABLE. CONSIDERATION SHOULD ALSO BE GIVEN TO THE TYPE OF CABLE-PULLING EQUIPMENT AND METHODS THAT WILL BE REQUIRED WHEN DESIGNING THE SYSTEM. CONSULT WITH C&M SUPERVISION REGARDING THE DISTANCE BETWEEN A RISER POLE AND THE FIRST MANHOLE OR PIECE OF PAD-MOUNTED EQUIPMENT.
- DUCT BANK SHOULD BE INSTALLED ON PRIVATE PROPERTY WHENEVER POSSIBLE IN ORDER TO AVOID FUTURE RELOCATION.
- DUCT BANK SHALL BE INSTALLED IN SUCH A LOCATION AS TO REMAIN ACCESSIBLE TO STANDARD DUKE ENERGY EQUIPMENT.
- EFFORT SHOULD BE MADE TO INSTALL THE DUCT BANK AT LEAST THREE FEET AWAY FROM FOREIGN UTILITIES WHEN POSSIBLE TO HELP PROVIDE CLEAR WORKING SPACE FOR MAINTENANCE OF FACILITIES. THE NATIONAL ELECTRICAL SAFETY CODE (NESC) ALLOWS FOR LESS SEPARATION WHEN NECESSARY DUE TO SPACE CONSTRAINTS.
- IF THE DUCT BANK IS TO BE INSTALLED IN THE PUBLIC RIGHT-OF WAY, ALL MUNICIPAL REQUIREMENTS FOR PERMITTING WORK AND CUTTING AND REPAIRING ROADWAYS SHALL BE FOLLOWED.
- JOINT-USE DUCT BANKS CONTAINING A COMBINATION OF ELECTRIC, SIGNALIZATION AND/OR COMMUNICATIONS INFRASTRUCTURE REQUIRE ADVANCE APPROVAL BY THE DUKE ENERGY PROJECT ENGINEER. GUIDELINES FOR JOINT-USE DUCT BANKS REQUIRE A MINIMUM OF THREE INCHES OF CONCRETE SEPARATION BETWEEN CONDUITS CONTAINING DUKE ENERGY FACILITIES AND CONDUIT CONTAINING OTHER INFRASTRUCTURE PER NESC SECTION 320-B. CONDUITS FOR JOINT-USE UTILITIES SHALL BE LOCATED BESIDE THE DUKE ENERGY DUCT BANK AND NEVER ABOVE IT. IN ADDITION, FOREIGN UTILITIES ARE NOT ALLOWED TO ENTER DUKE ENERGY MANHOLES OR VAULTS. THESE CONDUITS MUST SPLIT AWAY FROM THE DUCT BANK AND ROUTE AROUND MANHOLE, HANDHOLE, OR VAULT LOCATIONS. CARE SHOULD BE TAKEN TO INSTALL THESE FOREIGN CONDUITS IN A LOCATION AND ELEVATION THAT WILL NOT BLOCK THE CONDUIT OPENINGS IN THE MANHOLE OR VAULT THAT COULD BE USED FOR FUTURE EXPANSION. EXAMPLE CROSS SECTIONS OF JOINT-USE DUCT BANKS ARE PROVIDED ON DWG. 22.06-108.
- IF A CUSTOMER IS INSTALLING A DUCT BANK FOR DUKE ENERGY, THEY ARE REQUIRED TO PROVIDE A PLAN-VIEW DRAWING OF THE PROPOSED DUCT BANK TO THE DUKE ENERGY PROJECT ENGINEER FOR REVIEW PRIOR TO STARTING CONSTRUCTION. PROFILE-VIEW DRAWINGS OF THE PROPOSED DUCT BANK SHOULD ALSO BE REQUIRED FOR REVIEW ON COMPLEX PROJECTS. AT THE COMPLETION OF THE INSTALLATION, THE CUSTOMER IS REQUIRED TO PROVIDE DUKE ENERGY FINAL AS-BUILT DRAWINGS SHOWING THE INSTALLED LOCATION OF THE DUCT BANK.

DUKE ENERGY.

					DEC	DEM	DEP	DEF
3				DUCT BANK DESIGN CRITERIA	X	X	X	X
2					22.06-100B			
1								
0	12/31/15	FLETCHER	EANES	ADCOCK				
REVISED	BY	CK'D	APPR.					

2 DUCT BANK DESIGN CRITERIA (DUKE ENERGY DETAIL 22.06-100B)

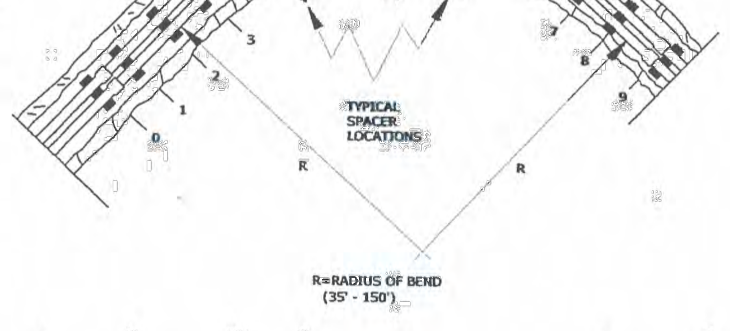

R=RADIUS OF BEND
(35' - 150')

NOTES:

1. SEE DWG. 22.06-102 OR 22.06-104 FOR CONFIGURATION DETAILS.

2. BENDS OF LESS THAN 35' RADIUS CAN BE ACCOMPLISHED USING FACTORY BENDS. BENDS GREATER THAN 150' GENERALLY REQUIRE NO SPECIAL TECHNIQUE.

3. JOINTS WHICH FALL WITHIN THE RADIUS OF THE CURVE ARE SUBJECTED TO THE SAME BENDING FORCES AS THE CONDUIT ITSELF. TO PREVENT THE TENSION SIDE (OUTSIDE OF CURVE) OF THE JOINT FROM FAILING, CAUTION MUST BE TAKEN TO ALLOW SUFFICIENT CURING TIME FOR ALL JOINTS IN THE RADIUS IN THE BEND. TWO HOURS CURING TIME IS REQUIRED AT 70°F. SHORTER TIMES MAY BE ADEQUATE IN HOTTER WEATHER AND LONGER TIMES MAY BE REQUIRED IN COLD WEATHER. SEE DWG. 22.05-100 FOR DETAILS ON JOINING PVC CONDUIT.

4. FOR BENDS WHERE THE RUNNING LENGTH OF DUCT REQUIRED IS 150' OR LESS, THE BENDING OPERATION IS SIMPLIFIED IF THE ENTIRE LENGTH IS PREASSEMBLED AND ALLOWED TO CURE PRIOR TO BENDING, PARTICULARLY IN INSTALLATIONS WHERE THE RADIUS OF CURVATURE IS LESS THAN 80'.

5. DRIVE REBAR INTO THE GROUND AT EACH SPACER LOCATION TO HOLD THE ASSEMBLY IN THE PROPER RADIUS.

DUKE ENERGY.

					DEC	DEM	DEP	DEF
3				DUCT BANK FIELD BENDS	X	X	X	X
2					22.06-118			
1								
0	12/31/15	FLETCHER	EANES	ADCOCK				
REVISED	BY	CK'D	APPR.					

8 DUCT BANK FIELD BENDS DETAIL (DUKE ENERGY DETAIL 22.06-118)

1. MARK THE DUCT BANK ROUTE ON THE SURFACE BY CHALKING OR OTHERWISE INDICATING THE OUTER LIMITS OF THE TRENCH TO BE CUT. EACH DUCT RUN SHOULD BE AS STRAIGHT AS POSSIBLE.

2. IF ASPHALT PAVEMENT IS TO BE REMOVED, IT SHOULD BE CUT A MINIMUM OF SIX INCHES WIDER THAN THE TRENCH IN ORDER TO PROVIDE AT LEAST A THREE-INCH SHELF OF UNDISTURBED EARTH ON EACH SIDE OF THE TRENCH.

3. REMOVE THE SURFACE BETWEEN THE MARKS. IF THE SURFACE IS SOD, REMOVE IT IN SQUARES AND SAVE FOR LATER REPLACEMENT.

4. WHEN DIGGING UNDERNEATH FOREIGN UTILITIES, CARE SHOULD BE TAKEN TO ADEQUATELY SUPPORT THESE FACILITIES SO THEY WILL NOT COLLAPSE INTO THE TRENCH.

5. THE TRENCH SHOULD BE EXCAVATED TO DEPTH WITH THE BOTTOM SMOOTH AND FREE OF ROCKS. A FOUR INCH BED OF SAND SHOULD BE ADDED IF THE BOTTOM OF THE TRENCH IS ROCKY. **THE TRENCH SHOULD BE DEEP ENOUGH TO ALLOW THE TOP OF THE DUCT BANK ENCASEMENT TO BE A MINIMUM OF TWO FEET BELOW GRADE**. THE TYPICAL MAXIMUM DEPTH FOR A DUCT BANK INSTALLATION IS FOUR FEET FROM GRADE TO THE TOP OF THE DUCT BANK, EXCEPT WHERE THE DUCT BANK IS ANGLED DOWN INTO A MANHOLE OR VAULT. ALSO, IT IS OCCASIONALLY NECESSARY TO GET ADDITIONAL DEPTH WHEN CROSSING UNDER ANOTHER UTILITY OR OBSTACLE.

6. THE TRENCH SHALL BE ANGLED DOWN TO MANHOLES AND VAULTS AT A MINIMUM SLOPE OF 1 INCH EVERY 20 FEET TO ALLOW WATER TO DRAIN OUT OF THE CONDUITS AS SHOWN IN THE FIGURE BELOW. WHEN TYING THE DUCT BANK INTO MANHOLES, THE CONDUITS SHALL BE INSTALLED INTO THE LOWEST AVAILABLE HOLES ON THE MANHOLE WITH THE SPACE AROUND THEM GROUTED AND SEALED. WHEN TYING DUCT BANK INTO VAULTS, THE CONDUITS SHALL BE INSTALLED INTO THE VAULT AT A HEIGHT AND LOCATION DETERMINED BY THE DUKE ENERGY PROJECT ENGINEER.

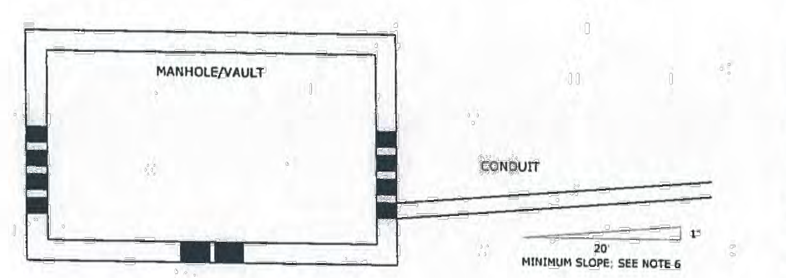

DUKE ENERGY.

					DEC	DEM	DEP	DEF
3				DUCT BANK INSTALLATION INSTRUCTIONS	X	X	X	X
2					22.06-116A			
1								
0	12/31/15	FLETCHER	EANES	ADCOCK				
REVISED	BY	CK'D	APPR.					

6 DUCT BANK INSTALLATION (DUKE ENERGY DETAIL 22.06-116A)

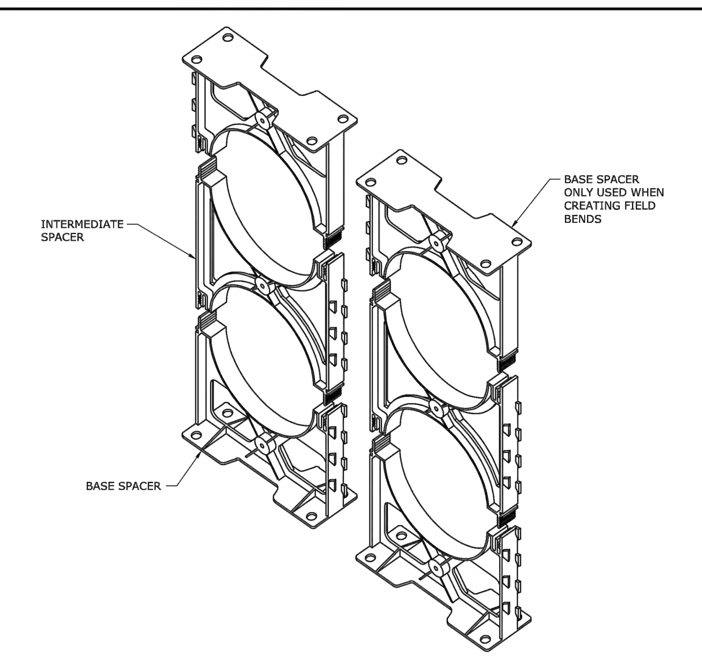

DUCT SIZE	REGION	ITEM NUMBER	
		BASE SPACER	INTERMEDIATE SPACER
2"	DEC	196423	1476143
3"	DEC	1476144	1476145
4"	DEC	1477614	1455529
	DEM	900272	900276
5"	DEC	196420	196419
	DEM	900271	900273
6"	DEC	196421	196422
	DEM	50110984	50117543
	DEP	21033105	21033204

NOTES:

1. SPACERS ARE ASSEMBLED BY PUSHING THEM TOGETHER.

2. BASE SPACERS AND INTERMEDIATE SPACERS INTERLOCK BOTH VERTICALLY AND HORIZONTALLY.

3. SPACERS SHOULD BE INSTALLED APPROXIMATELY EVERY FIVE FEET.

4. USE A BASE SPACER TURNED UPSIDE DOWN FOR TOP WHEN INSTALLING FIELD BENDS.

5. SEE DWGS. 22.06-102 AND 22.06-104 FOR PREFERRED CONFIGURATIONS OF DUCT BANK SPACERS AND FOR SPECIFIC INSTALLATION INSTRUCTIONS.

DUKE ENERGY.

					DEC	DEM	DEP	DEF
3				DUCT BANK SPACERS	X	X	X	X
2					22.06-110			
1								
0	12/31/15	FLETCHER	EANES	ADCOCK				
REVISED	BY	CK'D	APPR.					

4 DUCT BANK SPACERS DETAIL (DUKE ENERGY DETAIL 22.06-110)

STORMWATER MANAGEMENT PLAN
APPROVED
CITY OF WILMINGTON
ENGINEERING DEPARTMENT
DATE ________ PERMIT #______
SIGNED______________________

Approved Construction Plan

	Name	Date
Planning		
Traffic		
Fire		

For each open utility cut of City streets, a $325 permit shall be required from the City prior to occupancy and/or project acceptance.

1 APPROVALS

DMA Architecture PLLC

380-H Knollwood Street, Suite 174
Winston-Salem, NC 27103
phone: 336-723-6360
dishnermoore.com

McKIM & CREED
243 North Front Street
Wilmington, North Carolina 28401
Phone: (910)343-1048 , Fax: (910)251-8282
www.mckimcreed.com

revisions:
A - CITY OF WILMINGTON TRC SUBMITTAL 06/29/16

RIVERPLACE
(Water Street Parking Deck Redevelopment)
Block 190, City of Wilmington
Wilmington Township
New Hanover County, NC 28412

date: 06-29-16
job no. MCE 0205-0001
© 2016 DMA Architecture PLLC

NORTH CAROLINA PROFESSIONAL SEAL 022574 ENGINEER RICHARD M. COLLIER
06/29/2016

DUCT BANK DETAILS

CU-507

S:\0205\0001\80-Drawings\CU507_02050001.dwg, 6/29/2016 12:07:13 PM, CNursey, 1:1

9 AT+T MANHOLE COVER DETAIL

1810A1VH 1825ZVHPT Assembly

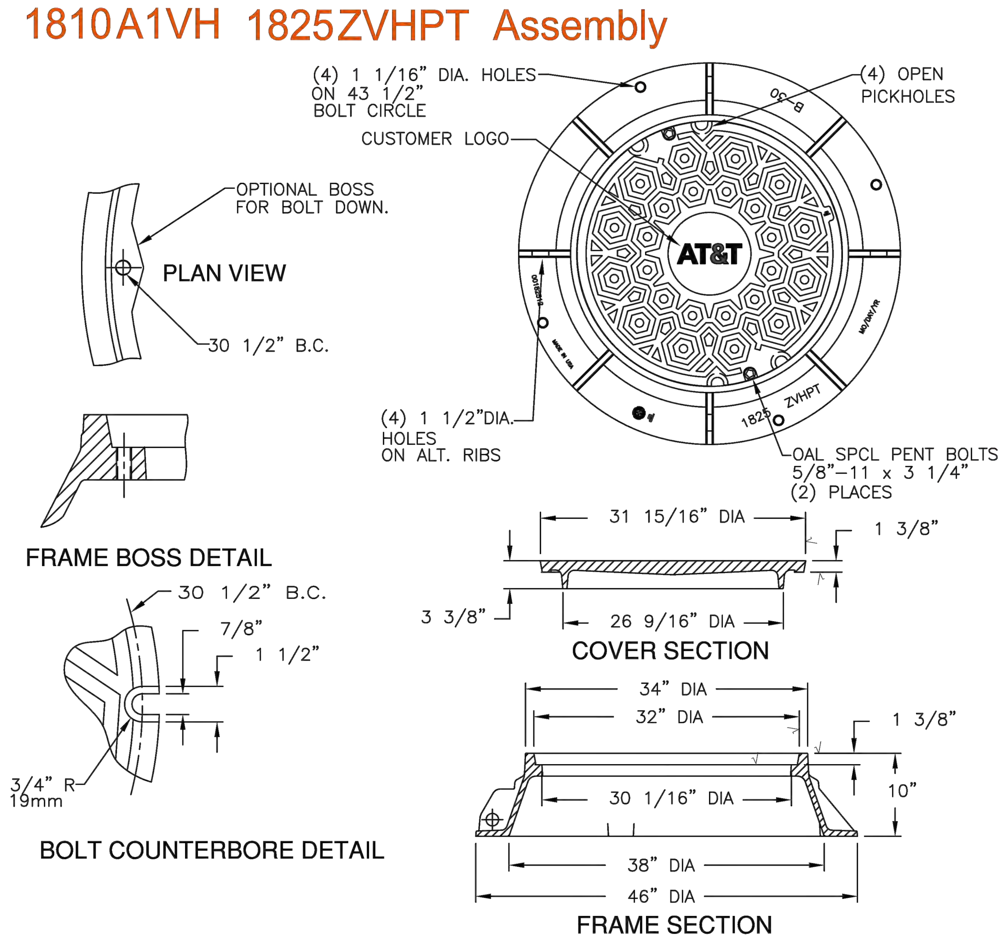

Product Number
00182530

Design Features
-Materials
Cover
Gray Iron (CL35B)
Frame
Gray Iron (CL35B)

-Design Load
Heavy Duty
-Open Area
n/a
-Coating
Undipped
-√ Designates Machined Surface

Certification
- ASTM A48
-
-
-Country of Origin: USA

Major Components
00181070
00182512

Drawing Revision
02/20/2007 Designer: JIJ
03/19/2014 Revised By: DVD

Disclaimer
Weights (lbs./kg) dimensions (inches/mm) and drawings provided for your guidance. We reserve the right to modify specifications without prior notice.

CONFIDENTIAL: This drawing is the property of EJ GROUP, Inc., and embodies confidential information, registered marks, patents, trade secret information, and/or know how that is the property of EJ GROUP, Inc.
Copyright © 2011 EJ GROUP, Inc. All rights reserved.

Contact
800 626 4653
ejco.com

7 FLUSHMOUNT SECONDARY JUNCTION BOX (DUKE DETAIL 24.05-05)

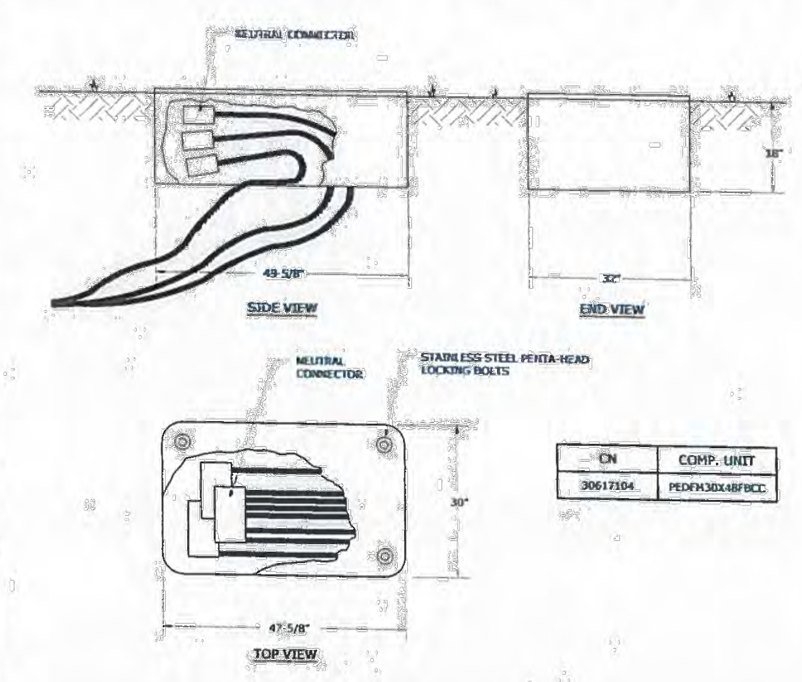

CN	COMP. UNIT
30617104	PEDFM30X48FBCC

NOTES:

1. SOIL ON WHICH HANDHOLE WILL REST SHOULD BE COMPACTED TO THAT OF UNDISTURBED EARTH.
2. HANDHOLE TO BE INSTALLED OVER SECONDARY CABLES WITH COVER FLUSH WITH FINAL GRADE.
3. ALL CABLES SHOULD ENTER HANDHOLE AT ONE END.
4. NEUTRAL CONNECTION IS TO BE ON TOP.
5. ALL CONNECTIONS MADE IN SECONDARY HANDHOLES MUST BE WATERPROOF. CONNECTIONS SHALL BE SUBMERSIBLE TYPE PER DWGS. 25.02-08A AND 25.02-08B.
6. COVER IS INCIDENTAL TRAFFIC RATED AT 20,000 LBS.
7. LARGE HANDHOLE IS TO BE USED TO ACCESS MULTIPLE SECONDARY AND STREET LIGHT CIRCUITS IN SHOPPING CENTERS, APARTMENTS, CONDOMINIUMS, AND DOWNTOWN AREAS.
8. INSTALL LOCID NUMBER ON TOP CABLE OR NEAREST TO TOP OPENING.
9. NOT FOR INSTALLATION IN ROADWAY OR SHOULDER OF NORMAL TRAVELWAY, NOR WHERE SUBJECT TO FREQUENT WHEEL LOADING. IF FUTURE WIDENING OF ROADWAY OCCURS, THE BOX MUST BE REMOVED IF LOCATED WITHIN THE NEW ROADWAY OR SHOULDER AREA.

FLUSHMOUNT SECONDARY JUNCTION BOX (LARGE) — Duke Energy — CAR — DWG. 25.02-06
REVISED | BY | CK'D | APPR.

5 MANHOLE RING AND COVER (DUKE DETAIL 24.05-05)

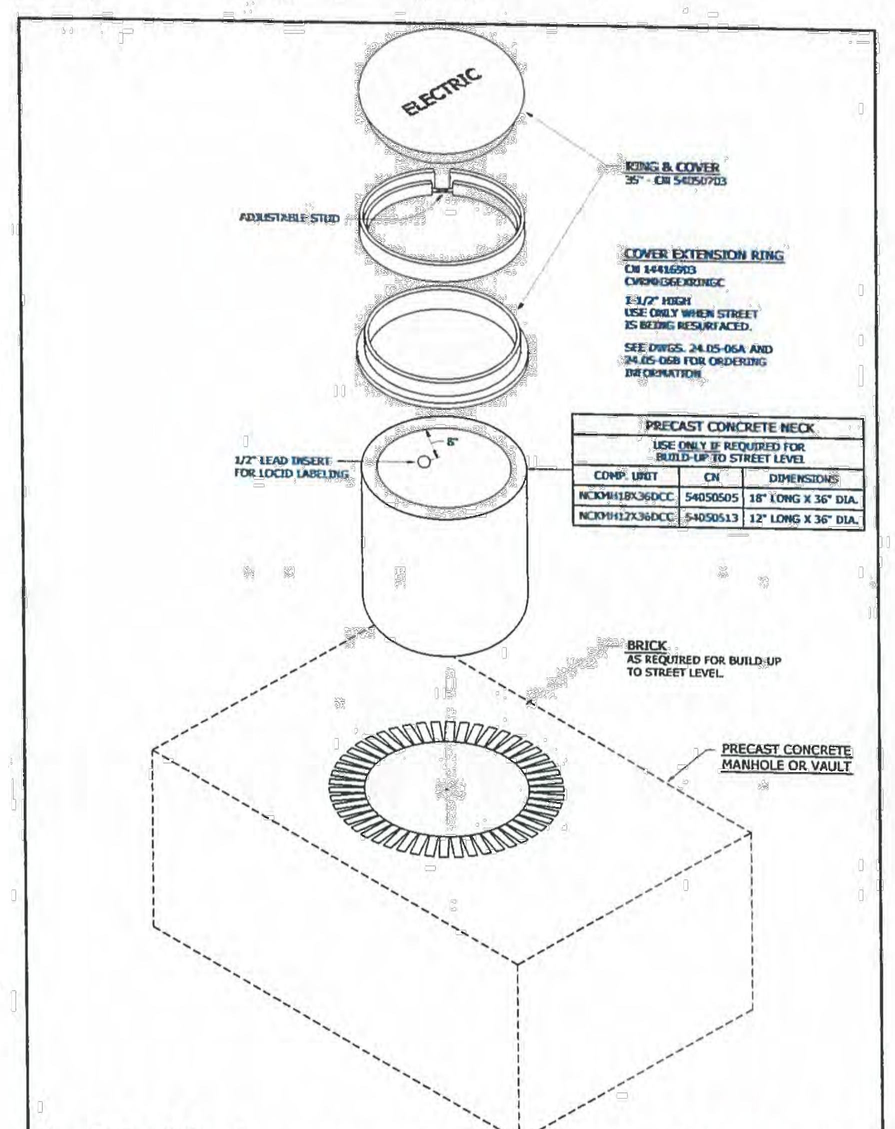

PRECAST CONCRETE NECK		
USE ONLY IF REQUIRED FOR BUILD-UP TO STREET LEVEL		
COMP. UNIT	CN	DIMENSIONS
NCKMH18X36DCC	54050505	18" LONG X 36" DIA.
NCKMH12X36DCC	54050513	12" LONG X 36" DIA.

MANHOLE RING AND COVER — Duke Energy — CAR — DWG. 24.05-05
REVISED | BY | CK'D | APPR.

3 10'x10' PRECAST MANHOLE INSTRUCTIONS (DUKE DETAIL 24.05-04A)

PRECAST CONCRETE MANHOLE SPECIFICATIONS AND INSTALLATION INSTRUCTIONS		
DESCRIPTION	CN	COMPATIBLE UNIT
MANHOLE	54050802	MNH10X10CC
RING & COVER *(36")	54050703	
NECK (SEE NOTE 1)	54050505	NCKMH18X36DCC
* WITH "ELECTRIC" ON COVER		

MATERIAL SPECIFICATIONS

MATERIALS ARE PER COMPANY GROUP SPECIFICATION #27.

ENGINEERING SPECIFICATIONS

PER COMPANY GROUP SPECIFICATION #27.

DEAD LOAD: CONCRETE = 150 LBS./CU. FT., SOIL COVER = 100 LBS./CU.FT.
LIVE LOAD: ASTM C857 (20-TON TRUCK AND 16-TON SEMI TRAILER)
AXLE LENGTH = 6' CENTER TO CENTER OF WHEELS

REAR WHEEL LOADS	= 16,000 LBS.
IMPACT (30%)	= 4,800 LBS.
TOTAL	= 20,800 LBS. PER WHEEL

INSTALLATION INSTRUCTIONS

THE EXCAVATION SHALL BE PREPARED ANY TIME PRIOR TO DELIVERY TO A MINIMUM SIZE OF 14' SQUARE AND DEPTH TO SUIT JOB. IT IS NOT NECESSARY TO SQUARE CORNERS OR MAKE SIDES VERTICAL.

TO DETERMINE MINIMUM DEPTH OF EXCAVATION: ALLOW 6" FOR SAND OR ROCK BASE WHICH MUST BE COMPACTED AND GRADED LEVEL, 8'-6" FOR MANHOLE, 10" FOR RING AND COVER = 9'-10" (SEE DWG. 24.05-04B). IN CASES WHERE FOREIGN UNDERGROUND FACILITIES ARE INVOLVED, THE MANHOLE SHALL BE SET BENEATH SUCH FACILITIES, AND THE ADDITIONAL DEPTH BUILT UP WITH LAYERS OF BRICK OR A PRECAST NECK (SEE DWG. 24.05-05). IN ALL INSTALLATIONS, BE SURE TO ALLOW FOR RING AND COVER WITH TOP OF COVER FLUSH WITH THE FINAL GRADE.

MANHOLE SHALL BE UNLOADED AND PLACED BY CONTRACTOR.

ALL BACKFILL SHALL BE THOROUGHLY TAMPED.

NOTES:

1. USE NECK ONLY IF REQUIRED FOR BUILD UP TO STREET LEVEL.

10' X 10' PRECAST MANHOLE INSTRUCTIONS — Duke Energy — CAR — DWG. 24.05-04A
REVISED | BY | CK'D | APPR.

2 4'x4' PRECAST CONCRETE PULLBOX (DUKE DETAIL 24.05-01)

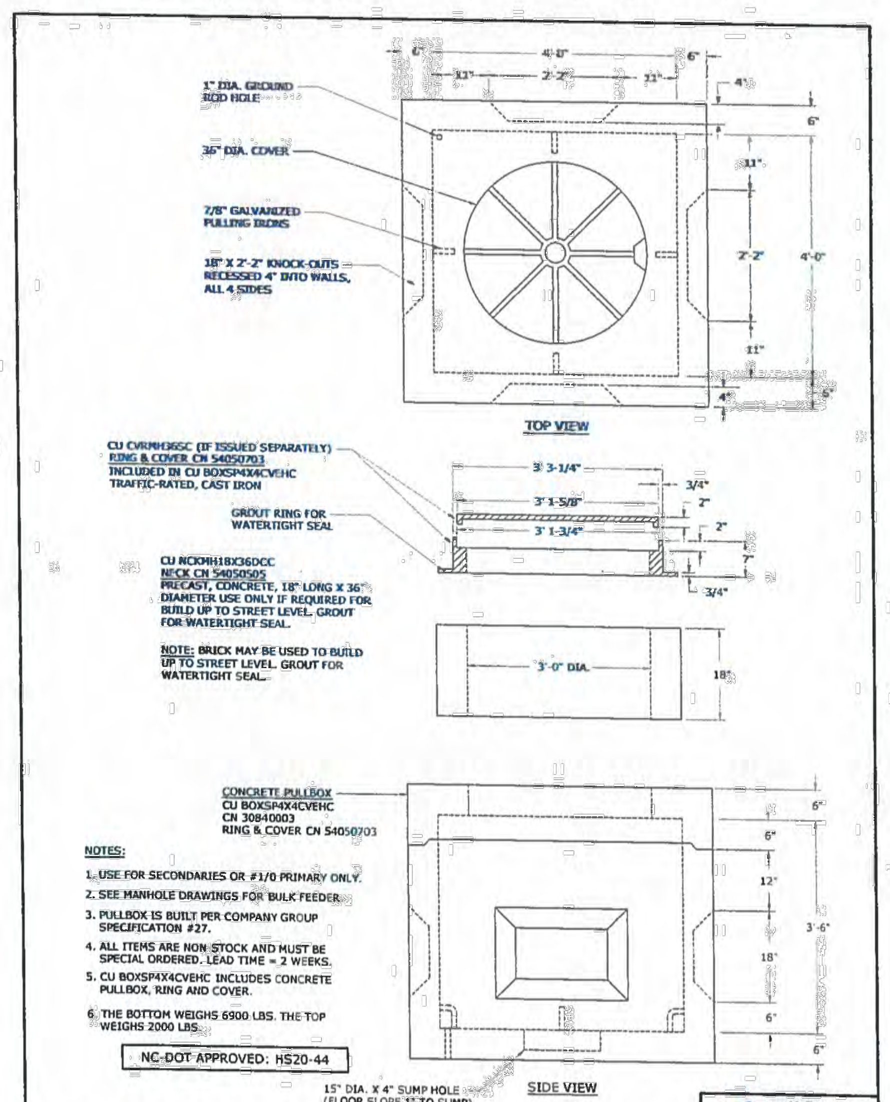

NOTES:

1. USE FOR SECONDARIES OR #1/0 PRIMARY ONLY.
2. SEE MANHOLE DRAWINGS FOR BULK FEEDER.
3. PULLBOX IS BUILT PER COMPANY GROUP SPECIFICATION #27.
4. ALL ITEMS ARE NON STOCK AND MUST BE SPECIAL ORDERED. LEAD TIME = 2 WEEKS.
5. CU BOXSP4X4CVEHC INCLUDES CONCRETE PULLBOX, RING AND COVER.
6. THE BOTTOM WEIGHS 6900 LBS. THE TOP WEIGHS 2000 LBS.

NC-DOT APPROVED: HS20-44

4' X 4' PRECAST CONCRETE PULLBOX AND COVER (VEHICULAR TRAFFIC RATED) — DUKE ENERGY — DEC | DEM | DEP | DEF — X — 24.05-01
REVISED | BY | CK'D | APPR.

8 STANDARD AT+T 4'x4' MANHOLE DETAIL

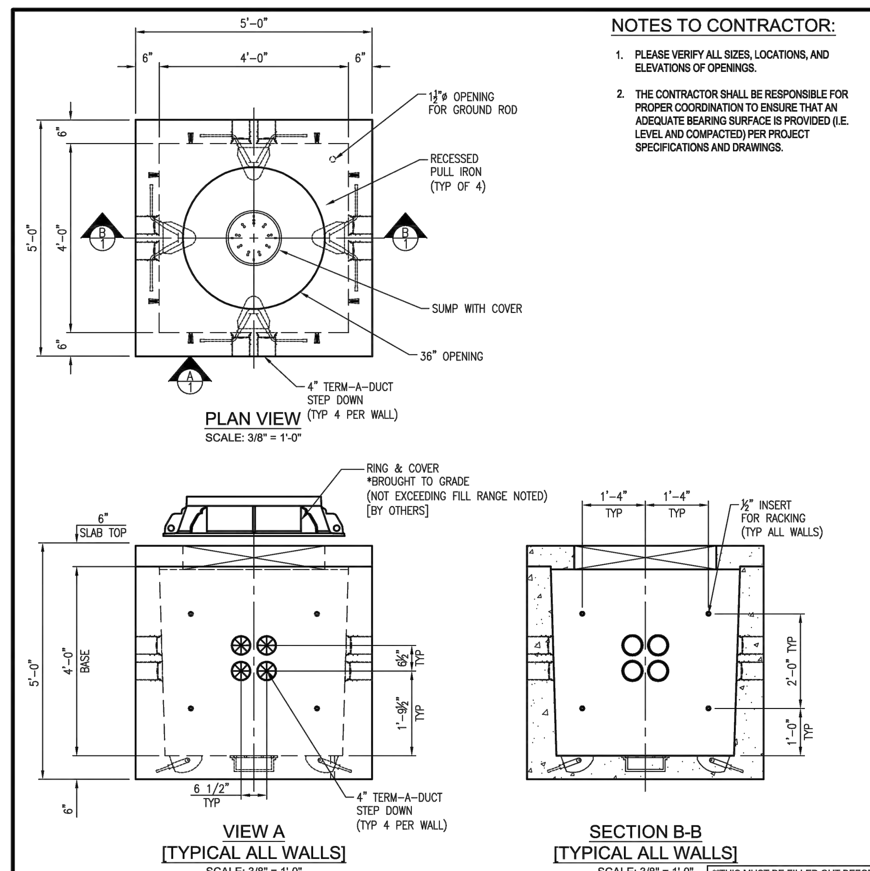

NOTES TO CONTRACTOR:

1. PLEASE VERIFY ALL SIZES, LOCATIONS, AND ELEVATIONS OF OPENINGS.
2. THE CONTRACTOR SHALL BE RESPONSIBLE FOR PROPER COORDINATION TO ENSURE THAT AN ADEQUATE BEARING SURFACE IS PROVIDED (I.E. LEVEL AND COMPACTED) PER PROJECT SPECIFICATIONS AND DRAWINGS.

GENERAL DESIGN NOTES:

1. STRENGTH DESIGN METHOD IN ACCORDANCE WITH (I.A.W.) ACI 318.
2. APPLICABLE DESIGN DOCUMENTS (CURRENT EDITIONS):
   - ACI 318 BUILDING CODE REQUIREMENTS FOR STRUCTURAL CONCRETE (MAIN DESIGN SPECIFICATION).
   - ASTM C857 STANDARD PRACTICE FOR MINIMUM STRUCTURAL DESIGN LOADING FOR UNDERGROUND PRECAST CONCRETE UTILITY STRUCTURES (LOADING SPECIFICATIONS).
   - ASTM C858 STANDARD SPECIFICATION FOR UNDERGROUND PRECAST CONCRETE UTILITY STRUCTURES (PRODUCT SPECIFICATION).
3. PRECAST RATED FOR HS20-44 TRUCK LIVE LOAD W/ IMPACT I.A.W. ASTM C857.
4. DESIGN FILL RANGE: 10"(MIN) TO 5'(MAX).
5. GROUND WATER TABLE FOR STRUCTURAL CALCULATIONS IS BASED UPON GROUND WATER TABLE AT 3'-6" BELOW GRADE. IF DESIGN(OR ACTUAL) WATER TABLE IS LESS THAN ASSUMED, REVIEWING ENGINEER/AUTHORITY SHALL NOTIFY OLDCASTLE PRECAST, INC. UPON REVIEW OF THIS SUBMITTAL.
6. LATERAL DESIGN PRESSURES (AS APPLICABLE TO DESIGN, SEE CALCULATIONS):
   - EQUIV DRY SOIL FLUID PRESSURE = 47 PCF.
   - EQUIV SATURATED SOIL FLUID PRESSURE = 85 PCF.
   - LIVE LOAD SURCHARGE PRESSURE = 80 PSF.
   - HYDROSTATIC WATER PRESSURE = 62.4 PCF.
7. DESIGN CONCRETE COMPRESSIVE STRENGTH AT 28 DAYS =5,000 PSI (MIN).
8. REINFORCEMENT: OLDCASTLE PE (DESIGN ENGINEER) MAY SUBSTITUTE THE REINFORCEMENT SHOWN HEREIN TO AN EQUIVALENT REINFORCEMENT ALTERNATIVE NOTED BELOW.
   - CARBON-STEEL DEFORMED BARS: ASTM A615, fy = 60KSI (MIN).
   - WELDED WIRE REINFORCEMENT - DEFORMED: ASTM A1064, fy = 70 KSI (MIN).
   - WELDED WIRE REINFORCEMENT - PLAIN: ASTM A1064, fy = 65 KSI (MIN).
9. JOINT SEALANT (AS DETAILED AND NOTED IN DRAWINGS HEREIN):
   - CS-102 CONSEAL BUTYL RUBBER SEALANT (OR EQUIV.) I.A.W. ASTM C990 FED. SPEC. SS-S-210
10. PRECAST DESIGN DOES NOT INCLUDE ANY LATERAL OR SURCHARGE LOADS FROM OTHER BUILDINGS OR FOUNDATIONS ADJACENT TO THIS STRUCTURE. THIS STRUCTURE SHALL BE KEPT A MINIMUM OF 1:1 RATIO AWAY FROM OTHER FOOTINGS OR FOUNDATIONS.

WEIGHTS		
SECTION	WEIGHT (lbs)	Concrete(CY)
6" SLAB TOP	1,400	0.35
48" BASE	7,600	1.88
TOTAL	9,000	

Oldcastle Precast® — 4905 STOUGH RD. CONCORD, NC — OFFICE 704-788-4050, FAX 704-788-4060 — NC ENGINEERING LICENSE #F-1002

THIS DOCUMENT IS THE PROPERTY OF OLDCASTLE PRECAST, INC. IT IS CONFIDENTIAL, SUBMITTED FOR REFERENCE PURPOSES ONLY, AND SHALL NOT BE USED IN ANY WAY INJURIOUS TO THE INTERESTS OF, OR WITHOUT THE WRITTEN PERMISSION OF OLDCASTLE PRECAST, INC.
COPYRIGHT © 2014 OLDCASTLE PRECAST, INC ALL RIGHTS RESERVED

4'x4'x4' ID MANHOLE — SUBMITTAL LAYOUT

THIS MUST BE FILLED OUT BEFORE MANUFACTURING BEGINS
APPROVED W/ NO EXCEPTIONS TAKEN: ☐
APPROVED AS NOTED: ☐
REVISED AND RESUBMIT: ☐
SIGNATURE | DATE

REVISION	DATE	BY	SHEET	DESCRIPTION OF REVISION	REQUESTED BY
A					
B					
C					
D					

CUSTOMER: STANDARD A T & T

DATE	SALES	DRAWN	ENGINEER	CHECKED	SALES ORDER
8/7/14	SZ	LD			—

DRAWING NUMBER: 444 ATT DropKey — REVISION / REV DATE — SHEET 1 OF 3

6 ADJUSTABLE MANHOLE EXTENSION RING (DUKE DETAIL 24.05-06A)

MANHOLE EXTENSION SYSTEM DIMENSION SHEET

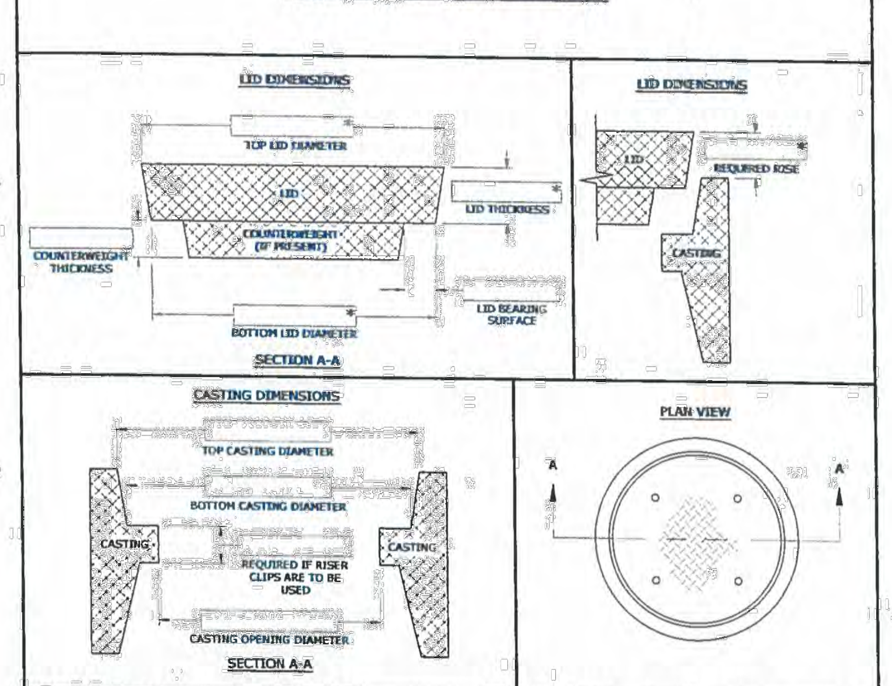

NOTES:

1. ALL DIMENSION BOXES ARE TO BE FILLED IN.
2. IF A DIMENSION IS NOT APPLICABLE, PLEASE PUT "N/A" IN THE APPROPRIATE BOX.
3. *- MINIMUM DIMENSION REQUIRED
4. IF REQUIRED RISE IS LESS THAN THE LID THICKNESS, AND NO ADJUSTER IS TO BE USED, ALL DIMENSIONS ARE REQUIRED.

TO ORDER MANHOLE EXTENSION RINGS FOR RESURFACING PROJECTS

1. MEASURE AND RECORD DIMENSIONS ON THIS PAGE AND ON DWG. 24.05-06B FOR EACH RING AND COVER.
2. PROVIDE COPY OF THIS PAGE AND DWG. 24.05-06B TO MATERIAL SERVICE REPRESENTATIVE WITH CN 14416903 AND CHARGE NUMBER.

ADJUSTABLE MANHOLE EXTENSION RING — Duke Energy — CAR — DWG. 24.05-06A
REVISED | BY | CK'D | APPR.

4 10'x10' PRECAST CONCRETE MANHOLE (DUKE DETAIL 24.05-04B)

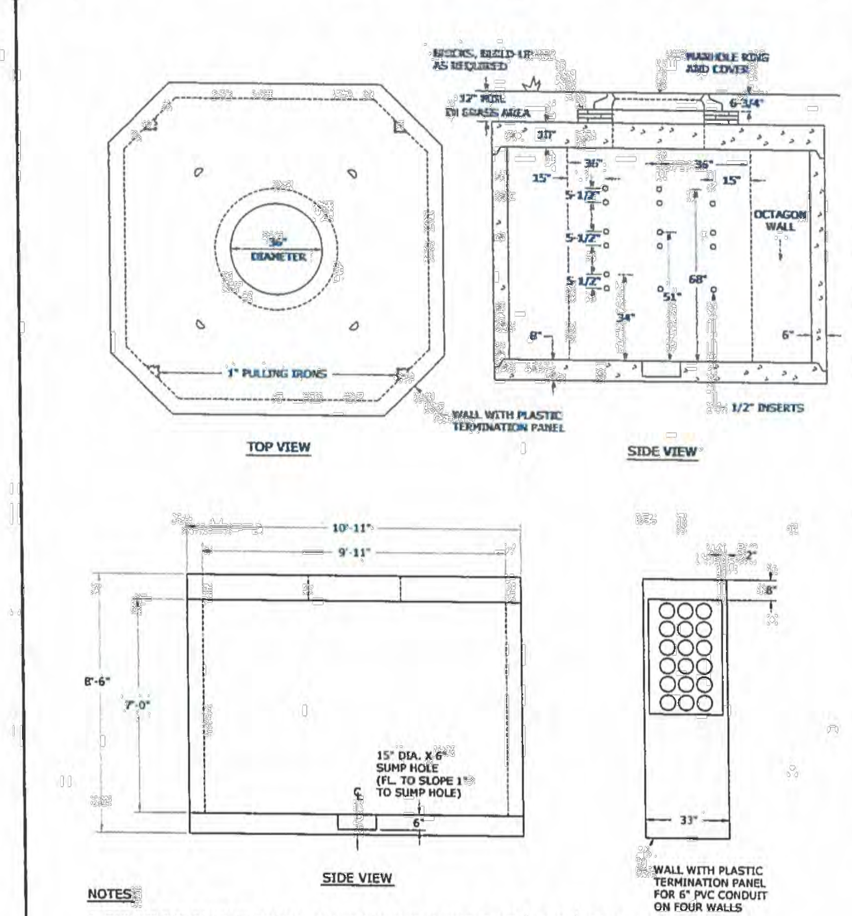

NOTES:

1. ONLY 6" PVC CONDUIT SHOULD BE USED IN THIS MANHOLE, NO 2" AND 4" CONDUIT.
2. SEE DWG. 24.05-04A FOR INSTALLATION INSTRUCTIONS.

CN 54050802
CU MNH10X10CC INCLUDES RING AND COVER (CN 54050703)

NC-DOT APPROVED: HS20-44

10' X 10' PRECAST CONCRETE MANHOLE — Duke Energy — CAR — DWG. 24.05-04B
REVISED | BY | CK'D | APPR.

1 APPROVALS

STORMWATER MANAGEMENT PLAN
APPROVED
CITY OF WILMINGTON
ENGINEERING DEPARTMENT
DATE _______ PERMIT #______
SIGNED____________________

Approved Construction Plan

	Name	Date
Planning		
Traffic		
Fire		

For each open utility cut of City streets, a $325 permit shall be required from the City prior to occupancy and/or project acceptance.

DMA Architecture PLLC
380-H Knollwood Street, Suite 174
Winston-Salem, NC 27103
phone: 336-723-6360
dishnermoore.com

McKIM & CREED
243 North Front Street
Wilmington, North Carolina 28401
Phone: (910)343-1048 , Fax: (910)251-8282
www.mckimcreed.com

revisions:
A - CITY OF WILMINGTON TRC SUBMITTAL 06/29/16

RIVERPLACE
(Water Street Parking Deck Redevelopment)
Block 190, City of Wilmington
Wilmington Township
New Hanover County, NC 28412

date: 06-29-16
job no. MCE 0205-0001
© 2016 DMA Architecture PLLC

NORTH CAROLINA PROFESSIONAL ENGINEER SEAL 022574 RICHARD M. COLLIER 06/29/2016

DRY UTILITY MANHOLE DETAILS

CU-508

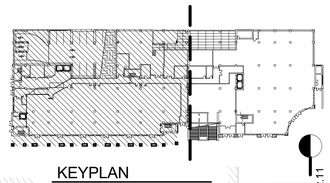

KEYPLAN
1" = 80'-0"

DMA Architecture PLLC

380-H Knollwood Street, Suite 174
Winston-Salem, NC 27103
phone: 336-723-6360
dishnermoore.com

revisions:

River Place
Water Street Parking Deck Redevelopment

Block 190, City of Wilmington
Wilmington Township
New Hanover County, NC 28412

date: 06/27/16
job no. 14-1800

© 2016 DMA Architecture PLLC

DESIGN DEVELOPMENT

NORTH TOWER
1ST FLOOR PLAN

A2.1

1 1ST FLOOR PLAN
1/8" = 1'-0"

6/28/2016 8:41:40 AM

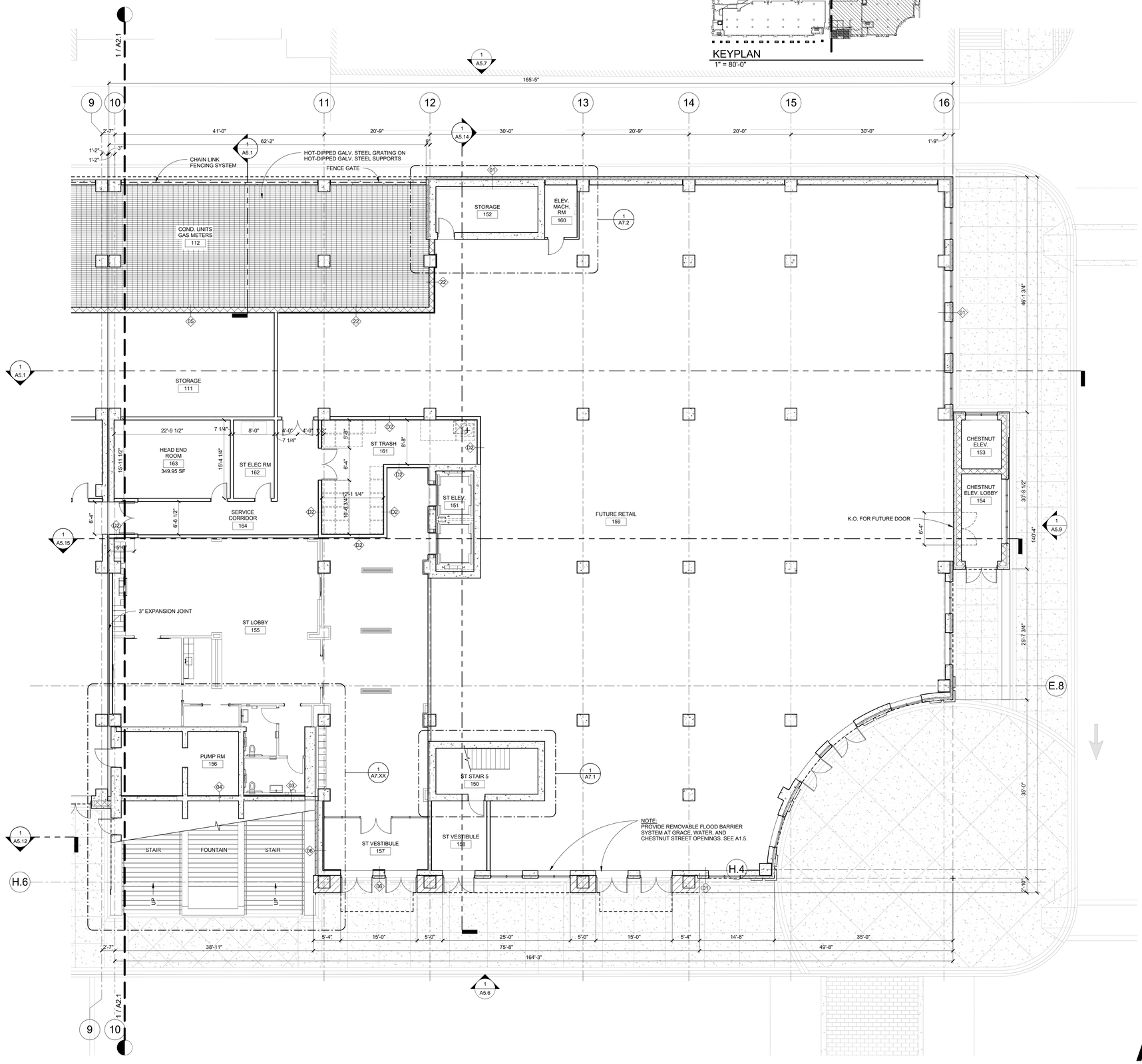

N 1 1ST FLOOR PLAN
1/8" = 1'-0"

DMA Architecture PLLC

380-H Knollwood Street, Suite 174
Winston-Salem, NC 27103
phone: 336-723-6360
dishmermoore.com

revisions:

River Place
Water Street Parking Deck Redevelopment

Block 190, City of Wilmington
Wilmington Township
New Hanover County, NC 28412

date: 06/27/16
job no. 14-1800

© 2016 DMA Architecture PLLC

DESIGN DEVELOPMENT

SOUTH TOWER
1ST FLOOR PLAN

A2.11

6/28/2016 8:44:01 AM

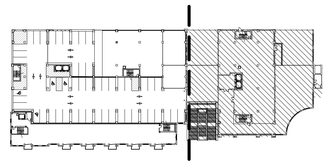

KEYPLAN
1" = 80'-0"

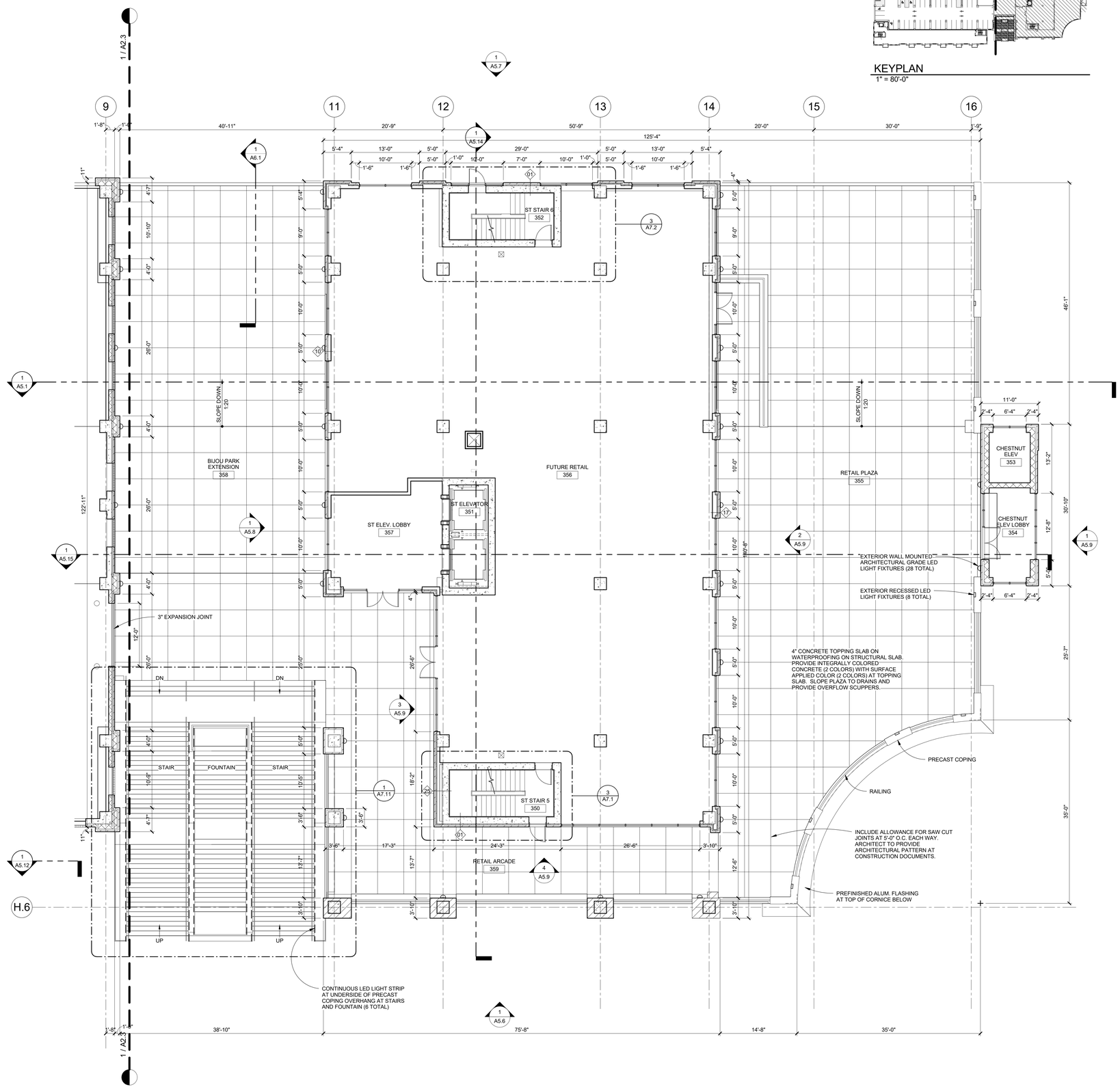

N

1 3RD FLOOR PLAN
1/8" = 1'-0"

DMA Architecture PLLC

380-H Knollwood Street, Suite 174
Winston-Salem, NC 27103
phone: 336-723-6360
dishmermoore.com

revisions:

River Place
Water Street Parking Deck Redevelopment

Block 190, City of Wilmington
Wilmington Township
New Hanover County, NC 28412

date: 06/27/16
job no. 14-1800

© 2016 DMA Architecture PLLC

DESIGN DEVELOPMENT

SOUTH TOWER
3RD FLOOR PLAN

A2.13

6/28/2016 8:44:19 AM

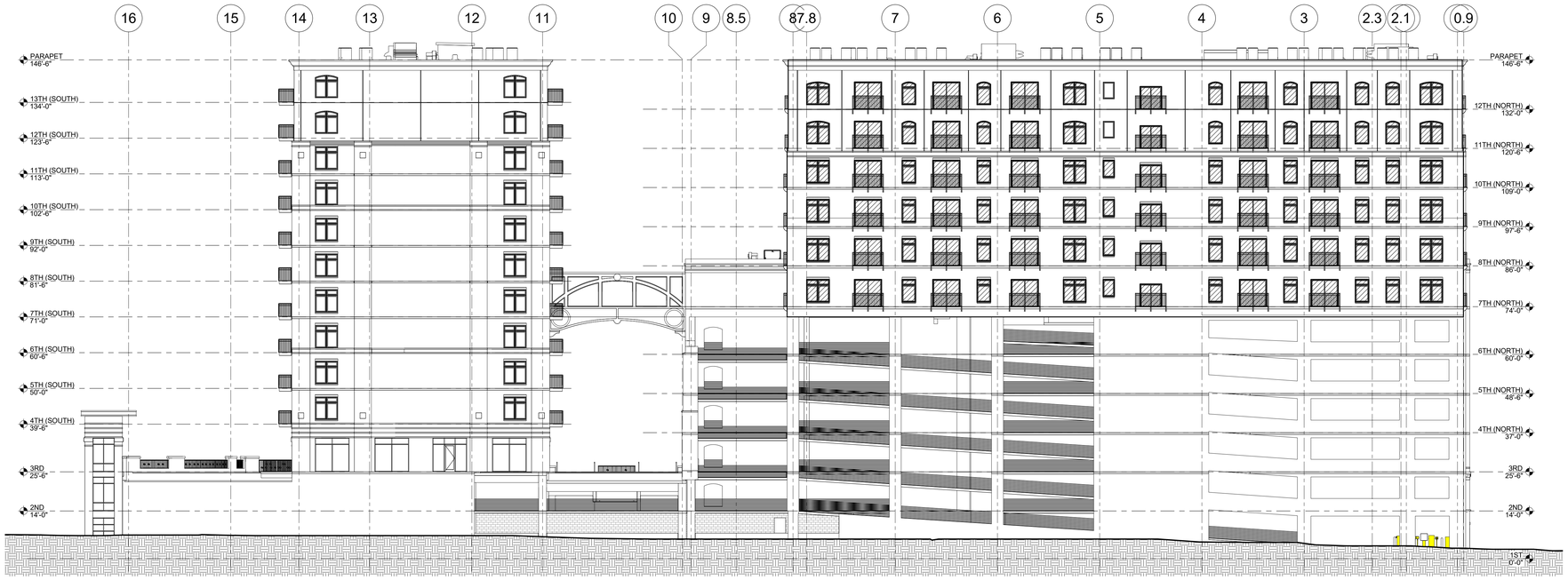

2 EAST ELEVATION
1/16" = 1'-0"

WEST ELEVATION GLAZING		
AREA	TYPE	%
5,407.92 SF	GLAZED AREAS	28.45%
13,597.41 SF	WALL AREAS	71.55%
19,005.33 SF		100.00%

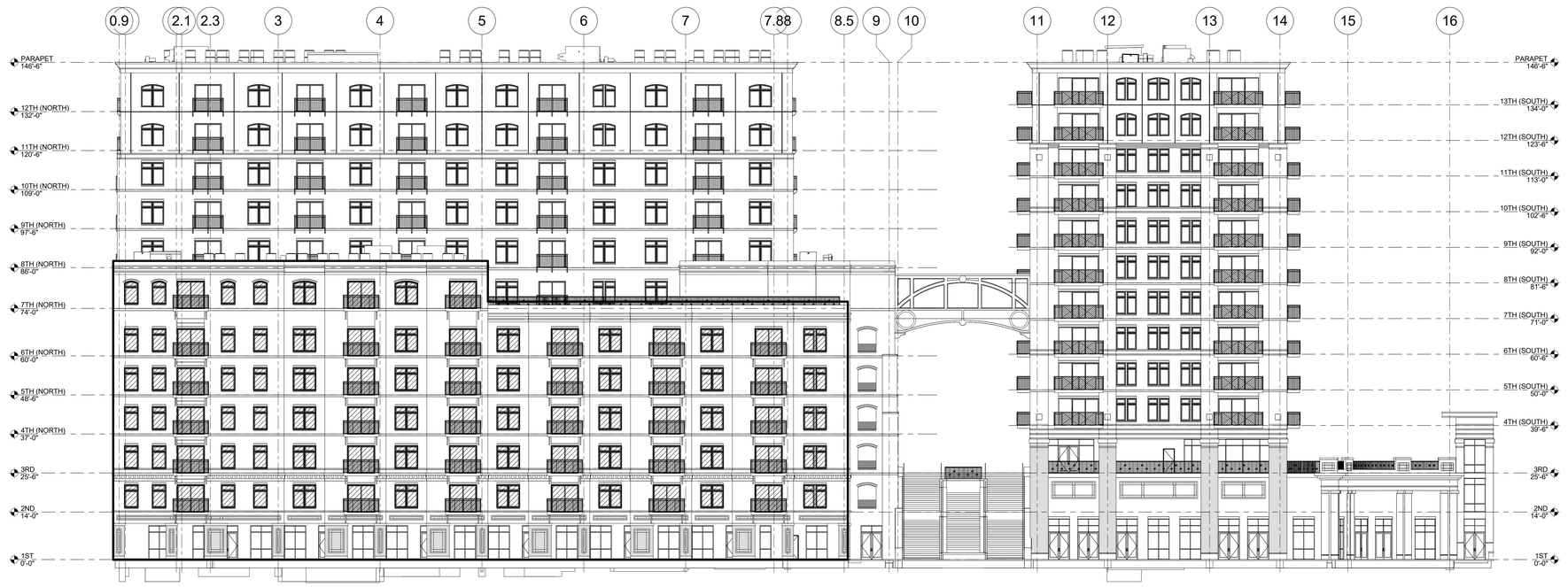

1 WEST ELEVATION
1/16" = 1'-0"

6/28/2016 8:46:11 AM

DMA Architecture PLLC

380-H Knollwood Street, Suite 174
Winston-Salem, NC 27103
phone: 336-723-6360
dishmermoore.com

revisions:

River Place
Water Street Parking Deck Redevelopment

Block 190, City of Wilmington
Wilmington Township
New Hanover County, NC 28412

date: 06/27/16
job no. 14-1800

© 2016 DMA Architecture PLLC

DESIGN DEVELOPMENT

OVERALL ELEVATIONS

A5.0

DMA Architecture PLLC

380-H Knollwood Street, Suite 174
Winston-Salem, NC 27103
phone: 336-723-6360
dishnermoore.com

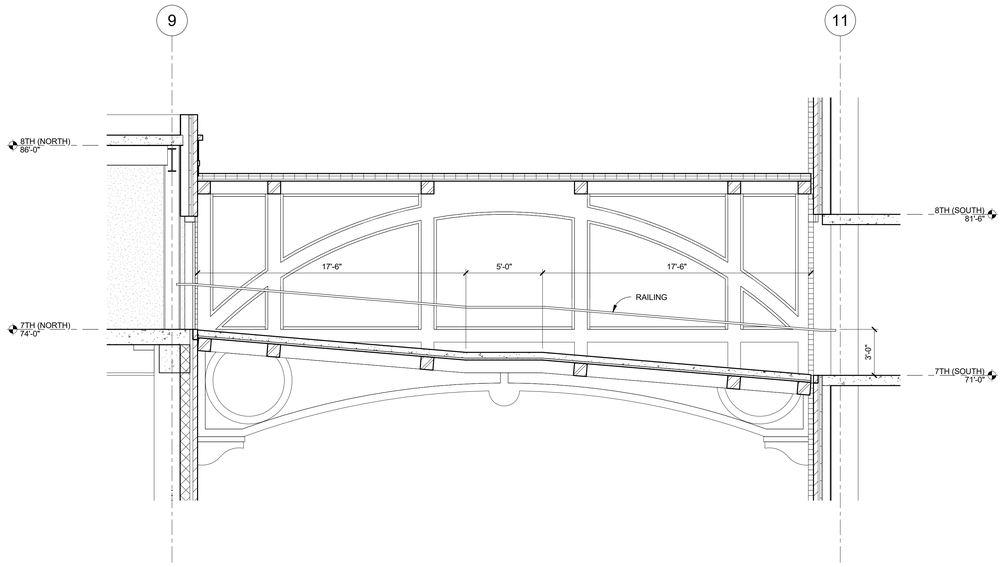

3 BRIDGE SECTION
1/4" = 1'-0"

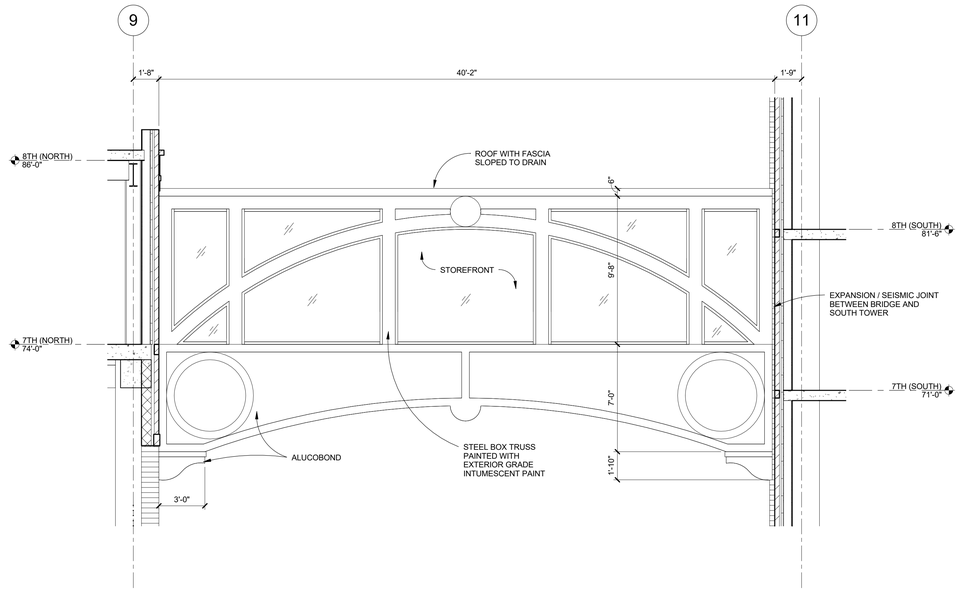

2 BRIDGE ELEVATION
1/4" = 1'-0"

1 LONGITUDINAL SECTION
1/16" = 1'-0"

River Place
Water Street Parking Deck Redevelopment

Block 190, City of Wilmington
Wilmington Township
New Hanover County, NC 28412

revisions:

date: 06/27/16
job no. 14-1800

© 2016 DMA Architecture PLLC

DESIGN DEVELOPMENT

OVERALL BUILDING SECTION

A5.1

6/28/2016 8:46:24 AM

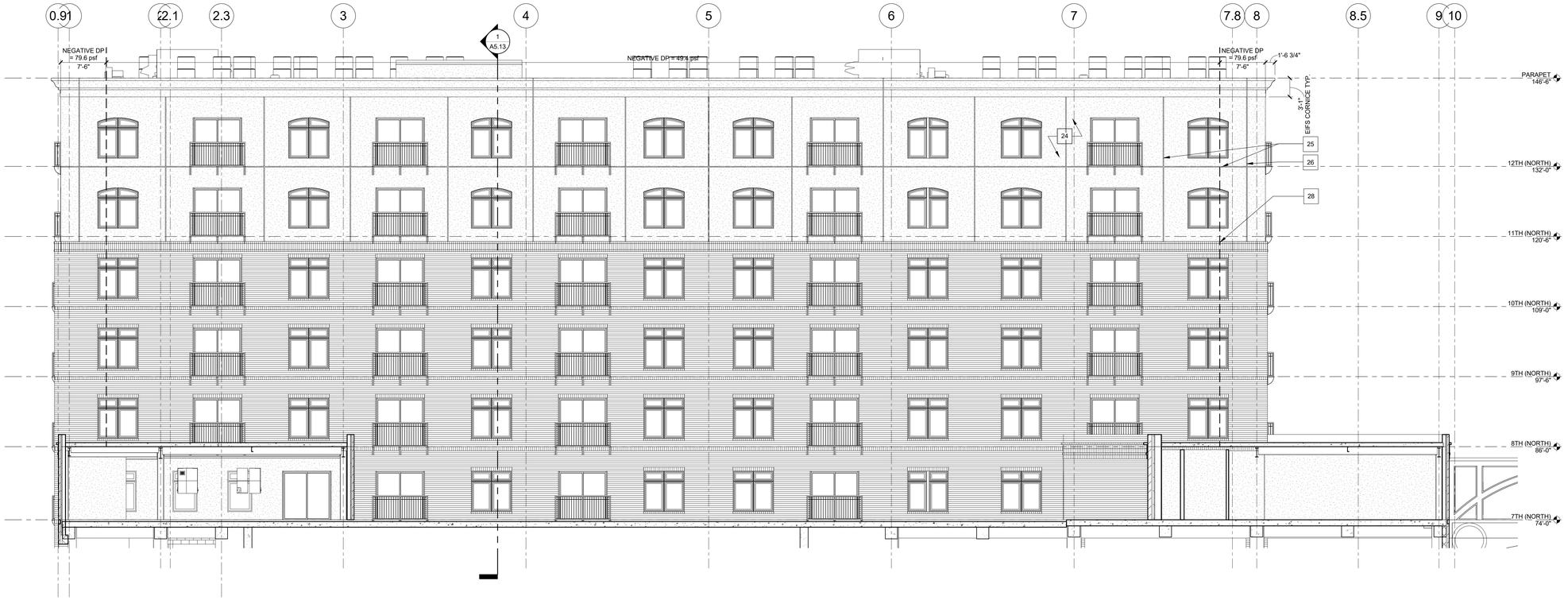

2 WEST ELEVATION NORTH TOWER
1/8" = 1'-0"

1 WEST ELEVATION WATER STREET
1/8" = 1'-0"

DMA Architecture PLLC

380-H Knollwood Street, Suite 174
Winston-Salem, NC 27103
phone: 336-723-6360
dishmermoore.com

revisions:

River Place
Water Street Parking Deck Redevelopment

Block 190, City of Wilmington
Wilmington Township
New Hanover County, NC 28412

date: 06/27/16
job no. 14-1800

© 2016 DMA Architecture PLLC

DESIGN DEVELOPMENT

NORTH TOWER BUILDING ELEVATIONS

A5.2

6/28/2016 8:46:41 AM

1 EAST ELEVATION - NORTH TOWER
1/8" = 1'-0"

6/28/2016 8:46:51 AM

DMA Architecture PLLC

380-H Knollwood Street, Suite 174
Winston-Salem, NC 27103
phone: 336-723-6360
dishmermoore.com

revisions:

River Place
Water Street Parking Deck Redevelopment

Block 190, City of Wilmington
Wilmington Township
New Hanover County, NC 28412

date: 06/27/16
job no. 14-1800

© 2016 DMA Architecture PLLC

DESIGN DEVELOPMENT

NORTH TOWER BUILDING ELEVATIONS

A5.3

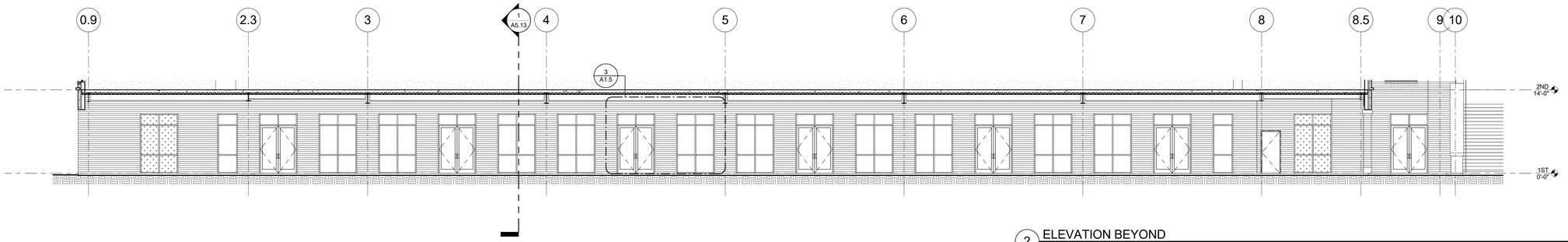

2 ELEVATION BEYOND
1/8" = 1'-0"

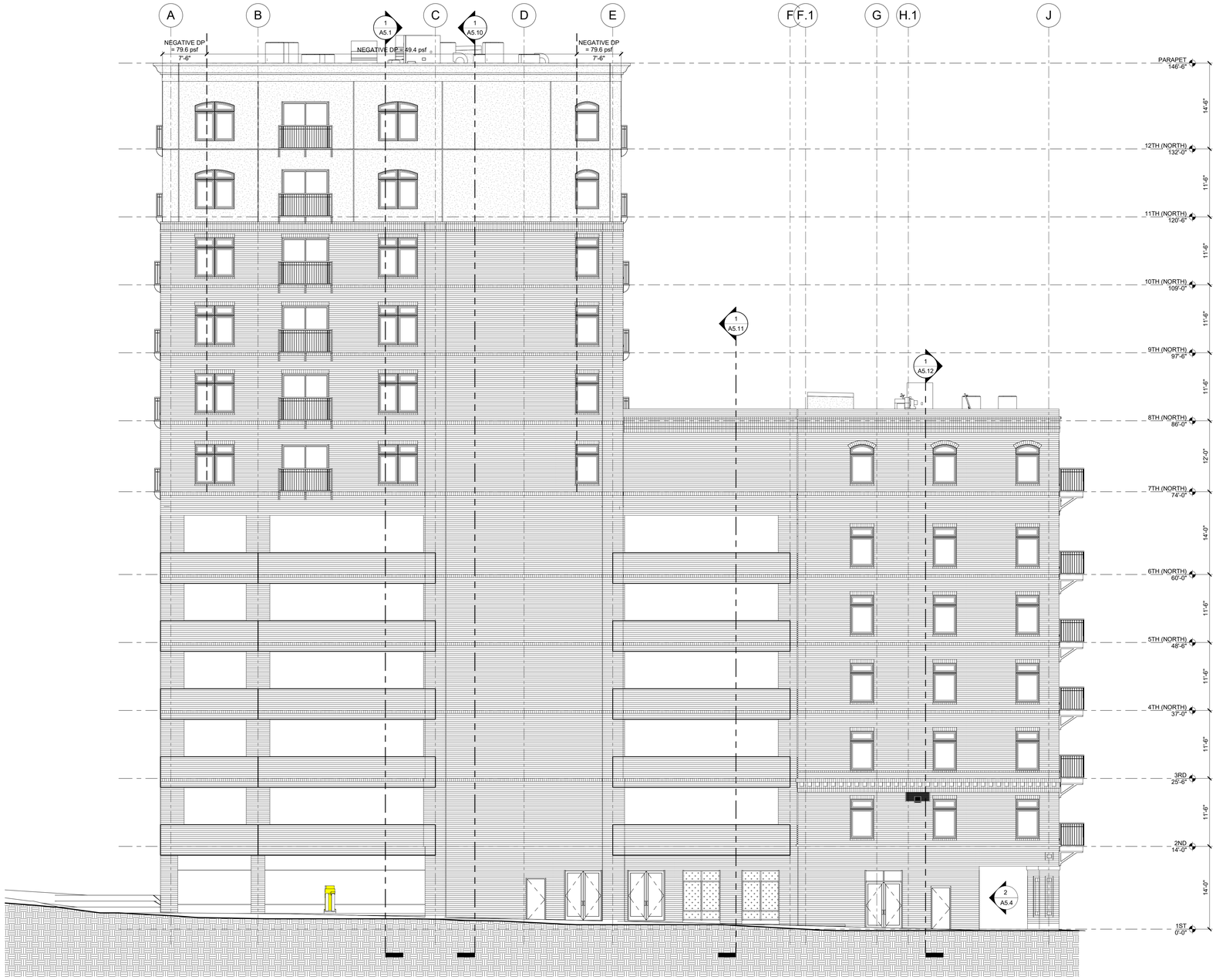

1 NORTH ELEVATION
1/8" = 1'-0"

DMA Architecture PLLC

380-H Knollwood Street, Suite 174
Winston-Salem, NC 27103
phone: 336-723-6360
dishnermoore.com

revisions:

River Place
Water Street Parking Deck Redevelopment

Block 190, City of Wilmington
Wilmington Township
New Hanover County, NC 28412

date: 06/27/16
job no. 14-1800

© 2016 DMA Architecture PLLC

DESIGN DEVELOPMENT

NORTH TOWER ELEVATIONS

A5.4

6/28/2016 8:47:17 AM

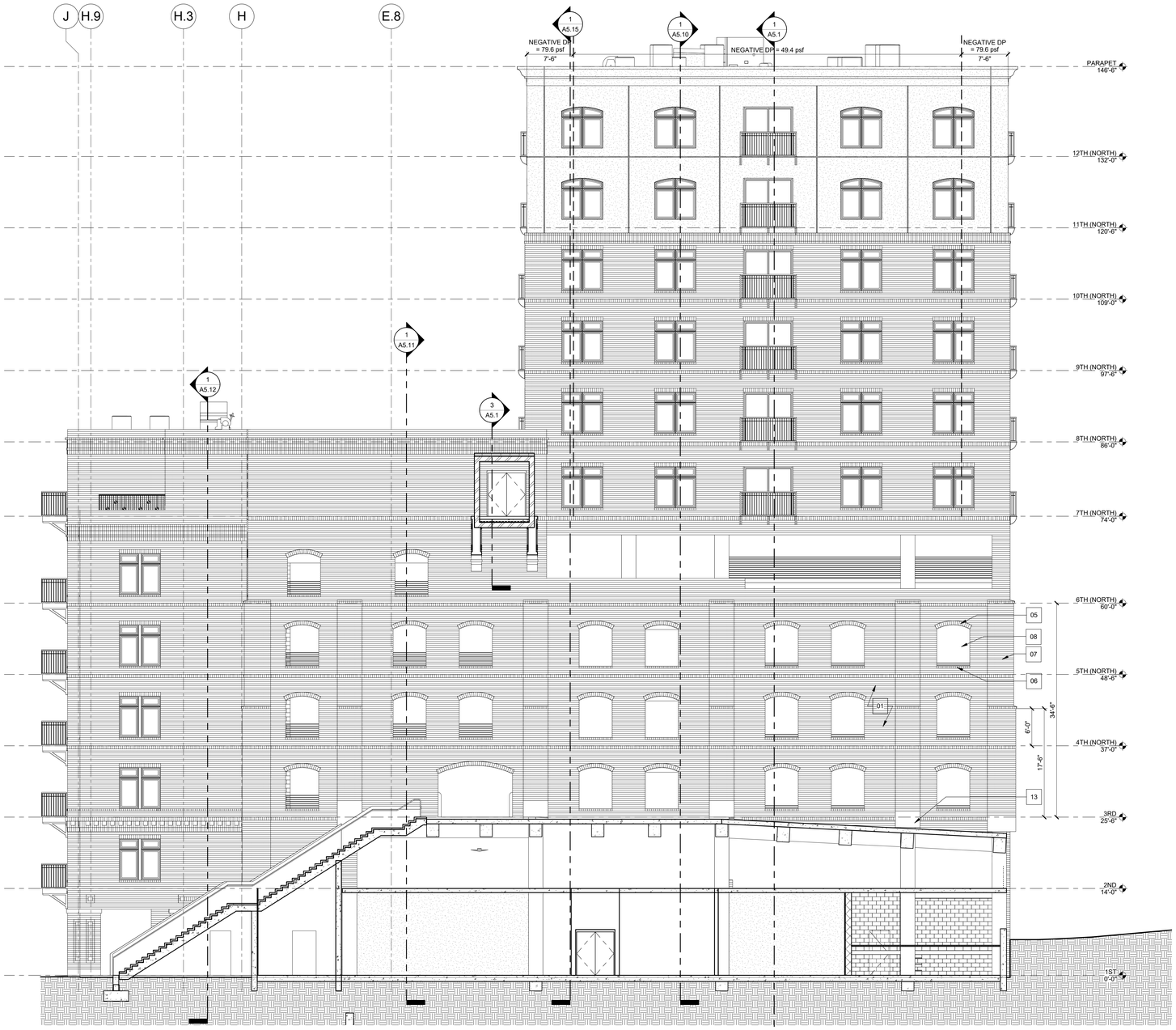

1 SOUTH ELEVATION NORTH TOWER
1/8" = 1'-0"

6/28/2016 8:47:27 AM

DMA Architecture PLLC

380-H Knollwood Street, Suite 174
Winston-Salem, NC 27103
phone: 336-723-6360
dishnermoore.com

revisions:

River Place
Water Street Parking Deck Redevelopment

Block 190, City of Wilmington
Wilmington Township
New Hanover County, NC 28412

date: 06/27/16
job no. 14-1800

© 2016 DMA Architecture PLLC

DESIGN DEVELOPMENT

NORTH TOWER BUILDING ELEVATIONS

A5.5

1. BRICK VENEER. ARCHITECT TO PROVIDE COLOR SELECTIONS FOR PRICING. VERTICAL CONTROL JOINTS WITH BACKER ROD AND SEALANT AT ALL INSIDE CORNER AND BETWEEN 20'-25' ON FLAT WALLS. HORIZONTAL CONTROL JOINTS AT EACH FLOOR PER NOTES 11 AND 12.
2. ARCHITECTURAL BRICK CORNICE 1
3. ARCHITECTURAL BRICK CORNICE 2
4. SOLDIER COURSE HEADER
5. SOLDIER COURSE JACK ARCH
6. ROWLOCK SILL
7. BRICK PILASTER
8. MASONRY OPENING WITH BRICK JAMBS, HEAD, AND SILL
9. BRICK DIAPER PATTERN
10. 2-PIECE HOT-DIPPED SHELF ANGLE, THRU WALL FLASHING, AND WEEPS. INSTALL HORIZONTAL CONTROL JOINT WITH BACKER ROD AND SEALANT BELOW SHELF ANGLE.
11. 6" SOLDIER COURSE (CUT OR CUSTOM SHAPE) WITH 2-PIECE HOT-DIPPED SHELF ANGLE, THRU WALL FLASHING, AND WEEPS. INSTALL HORIZONTAL CONTROL JOINT WITH BACKER ROD AND SEALANT BELOW SHELF ANGLE.
12. 8" SOLDIER COURSE WITH 2-PIECE HOT-DIPPED GALVANIZED SHELF ANGLE, THRU WALL FLASHING, AND WEEPS. INSTALL HORIZONTAL CONTROL JOINT WITH BACKER ROD AND SEALANT BELOW SHELF ANGLE.
13. PRECAST TRIM WITH ETCHED FINISH. SAND AND AGGREGATE MIX TO BE SELECTED BY ARCHITECT IN COORDINATION WITH THE PRECAST MFR. JOINT PATTERN TO BE DETERMINED BY ARCHITECT.
14. GFRC CORNICE
15. PRECAST COPING WITH ETCHED FINISH
16. PRECAST SPANDREL PANELS WITH CAST-IN THIN BRICK VENEER
17. VINYL WINOWS WITH SOLARBAN 67 (2) SOLARGRAY + CLEAR GLASS I.G.U. MUST WITHSTAND DESIGN PRESSURES (DP) NOTED ON BUILDING ELEVATIONS.
18. VINYL SLIDING DOORS. GLASS TO MATCH VINYL WINDOWS. MUST WITHSTAND DESIGN PRESSURES (DP) NOTED ON BUILDING ELEVATIONS.
19. CUSTOM ALUMINUM RALING WITH POWDER COATED FINISH. RAILING TO BOLTED TOGETHER IN SECTIONS ON SITE (NO FIELD WELDS). RAILING TO BE BOLTED TO EDGE OF SLAB WITH STAINLESS STEEL (S.S) ANCHOR BOLTS AND ACORN NUTS.
20. THERMALLY BROKEN ALUMINUM STOREFRONT WITH FACTORY PAINTED FINISH. GLASS TO MATCH VINYL WINDOWS.
21. ALUCOBOND PANELS
22. PREFINISHED ALUMINUM COPING
23. DECORATIVE STEEL RAILING WITH POWDER COATED FINISH. RAILING TO BOLTED TOGETHER IN SECTIONS ON SITE (NO FIELD WELDS). PROVIDE BRONZE HANDRAIL MOULDING AT TOP EDGE EQUAL TO 4533 BY JULIUS BLOOM & CO.
24. EIFS WITH SANDPEBBLE TEXTURE
25. 3/4" DEEP REVEALS
26. EIFS CONTROL JOINTS WITH BACKER ROD AND SEALANT
27. EIFS SOFFIT
28. PREFINISHED ALUM FLASHING AT TRANSITION BETWEEN EIFS AND BRICK

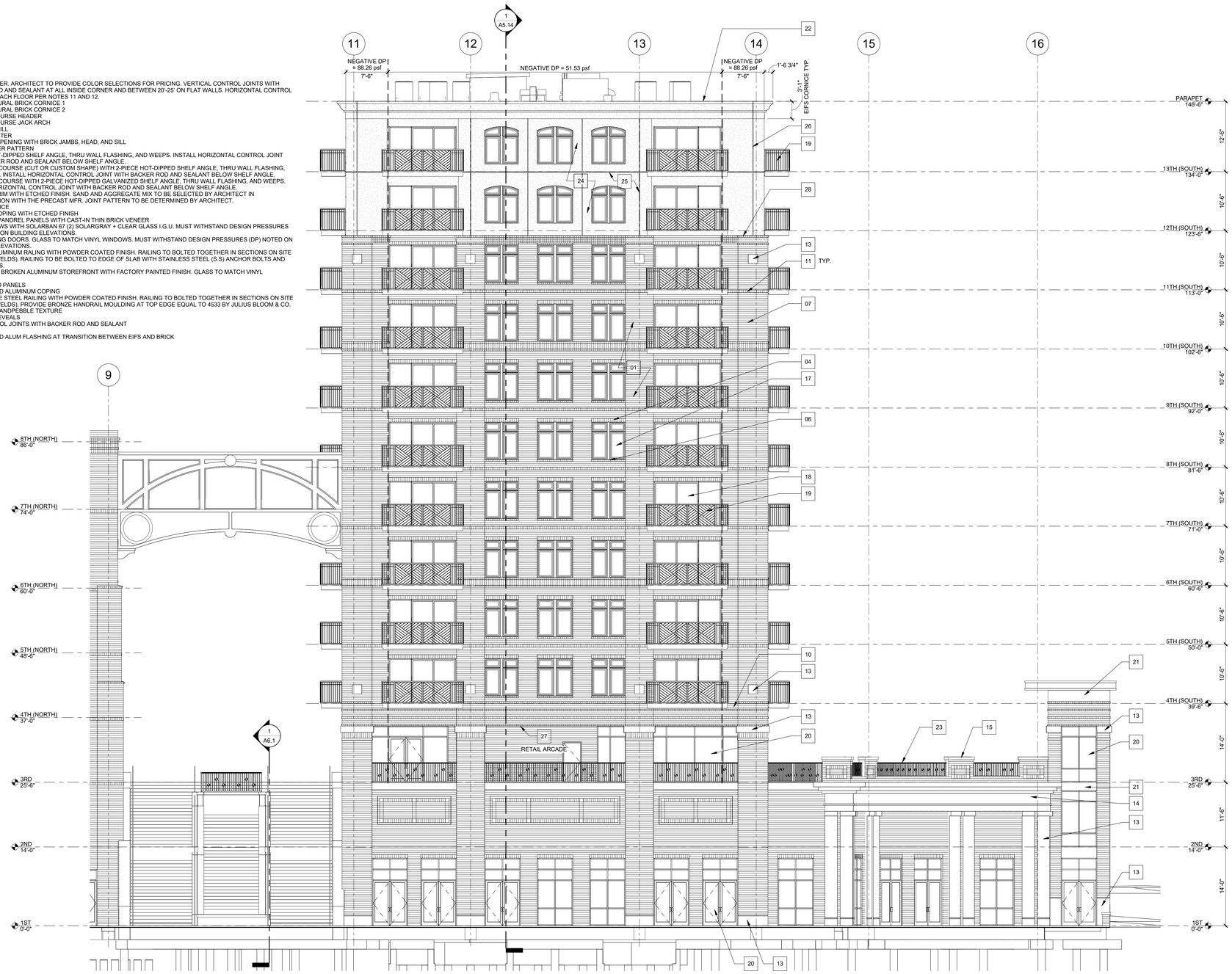

1 WEST ELEVATION SOUTH TOWER
1/8" = 1'-0"

6/28/2016 8:47:38 AM

DMA Architecture PLLC

380-H Knollwood Street, Suite 174
Winston-Salem, NC 27103
phone: 336-723-6360
dishmermoore.com

revisions:

River Place
Water Street Parking Deck Redevelopment

Block 190, City of Wilmington
Wilmington Township
New Hanover County, NC 28412

date: 06/27/16
job no. 14-1800

© 2016 DMA Architecture PLLC

DESIGN DEVELOPMENT

SOUTH TOWER BUILDING ELEVATIONS

A5.6

DMA Architecture PLLC

380-H Knollwood Street, Suite 174
Winston-Salem, NC 27103
phone: 336-723-6360
dishmermoore.com

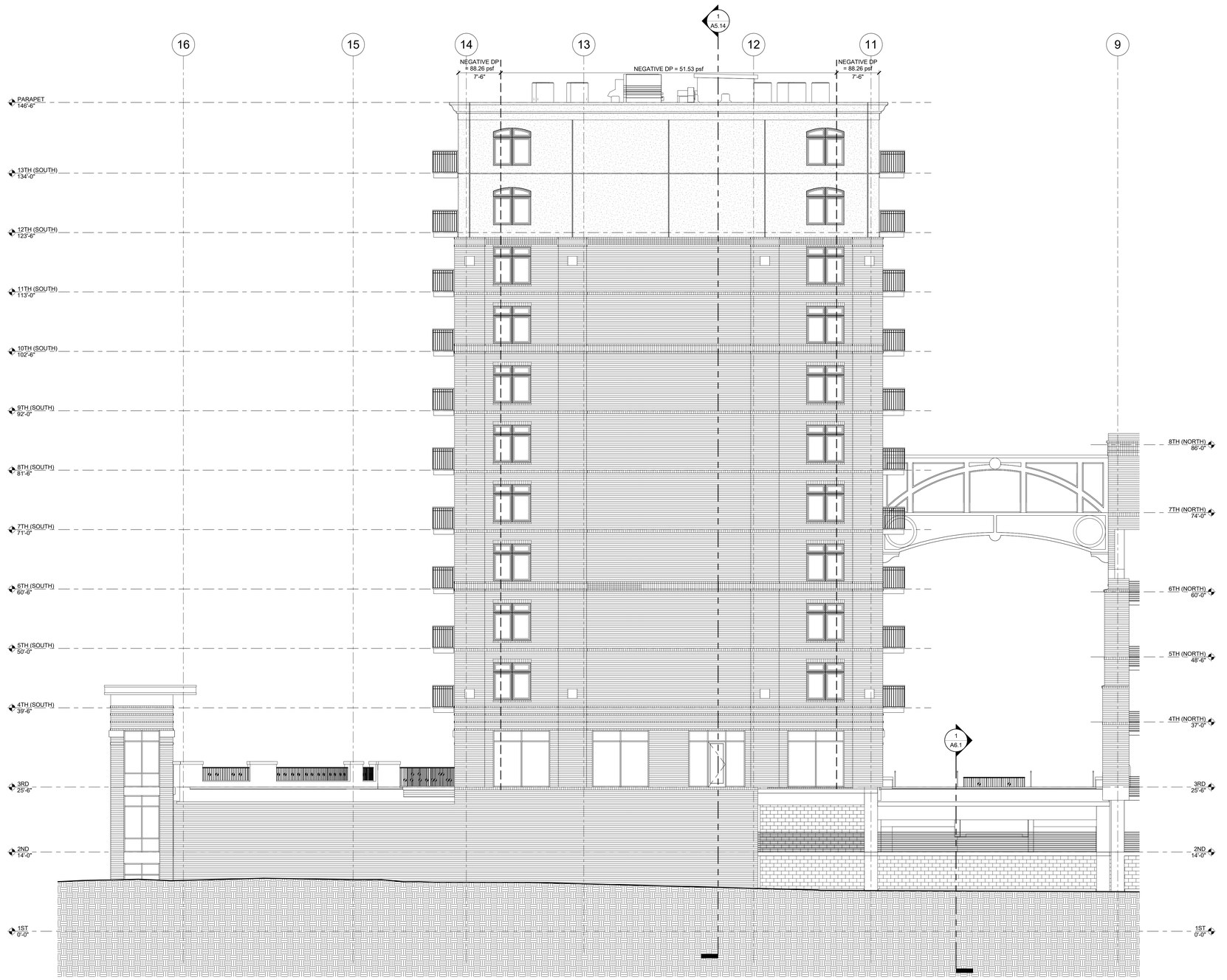

1 EAST ELEVATION SOUTH TOWER
1/8" = 1'-0"

revisions:

River Place
Water Street Parking Deck Redevelopment

Block 190, City of Wilmington
Wilmington Township
New Hanover County, NC 28412

date: 06/27/16
job no. 14-1800

© 2016 DMA Architecture PLLC

DESIGN DEVELOPMENT

SOUTH TOWER BUILDING ELEVATIONS

A5.7

6/28/2016 8:47:45 AM

DMA Architecture PLLC

380-H Knollwood Street, Suite 174
Winston-Salem, NC 27103
phone: 336-723-6360
dishnermoore.com

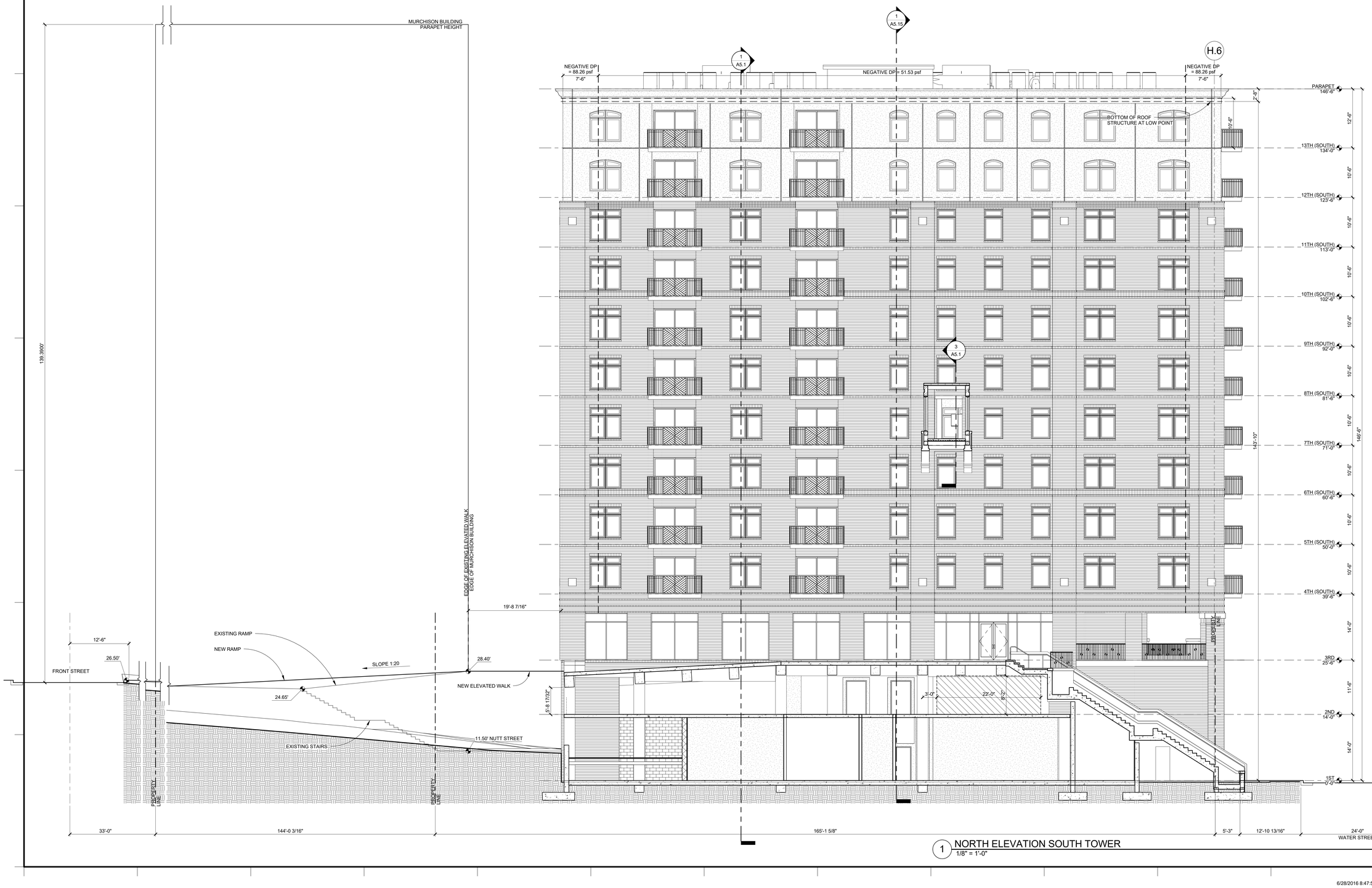

1 NORTH ELEVATION SOUTH TOWER
1/8" = 1'-0"

revisions:

River Place
Water Street Parking Deck Redevelopment

Block 190, City of Wilmington
Wilmington Township
New Hanover County, NC 28412

date: 06/27/16
job no. 14-1800

© 2016 DMA Architecture PLLC

DESIGN DEVELOPMENT

SOUTH TOWER BUILDING ELEVATIONS

A5.8

6/28/2016 8:47:55 AM

2 SOUTH ELEVATION SOUTH TOWER
1/8" = 1'-0"

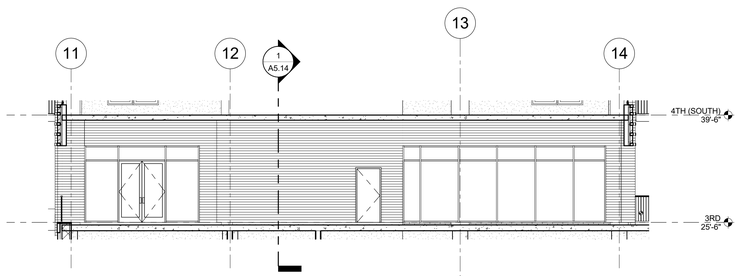

4 PARTIAL WEST ELEVATION SOUTH TOWER
1/8" = 1'-0"

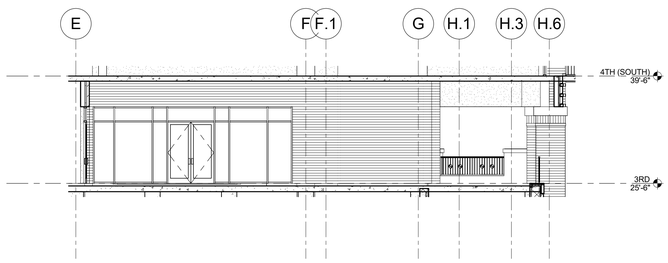

3 PARTIAL NORTH ELEVATION SOUTH TOWER
1/8" = 1'-0"

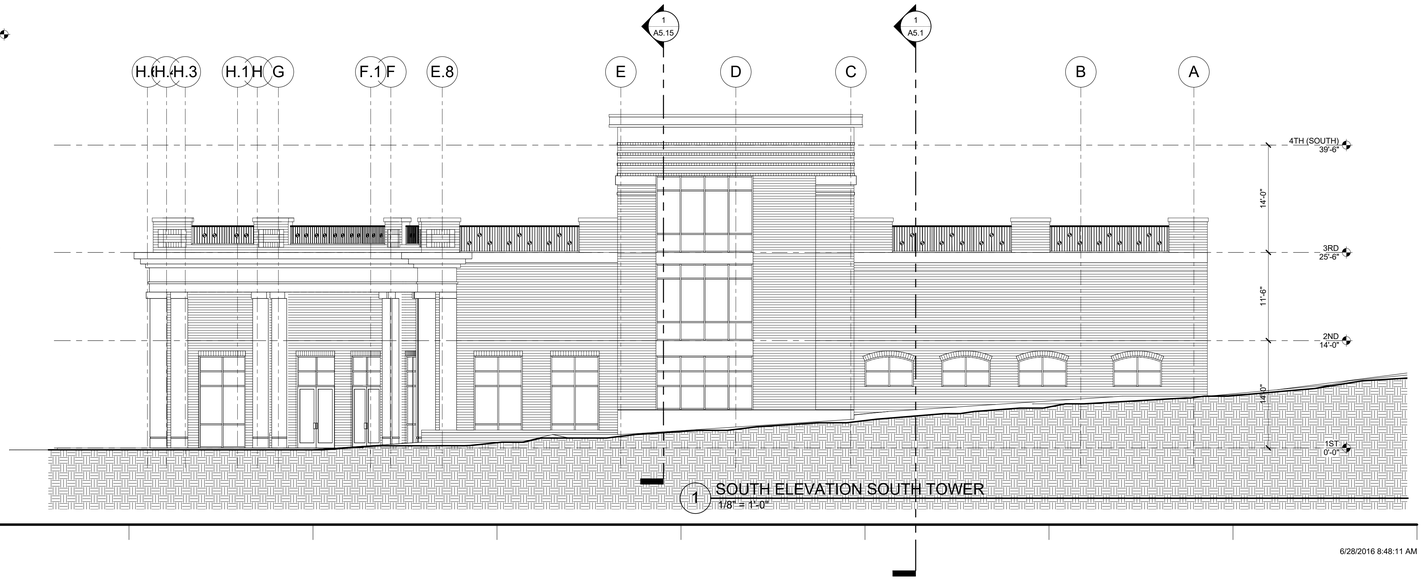

1 SOUTH ELEVATION SOUTH TOWER
1/8" = 1'-0"

6/28/2016 8:48:11 AM

DMA Architecture PLLC

380-H Knollwood Street, Suite 174
Winston-Salem, NC 27103
phone: 336-723-6360
dishnermoore.com

revisions:

River Place
Water Street Parking Deck
Redevelopment

Block 190, City of Wilmington
Wilmington Township
New Hanover County, NC 28412

date: 06/27/16
job no. 14-1800

© 2016 DMA Architecture PLLC

DESIGN
DEVELOPMENT

SOUTH TOWER
BUILDING
ELEVATIONS

A5.9