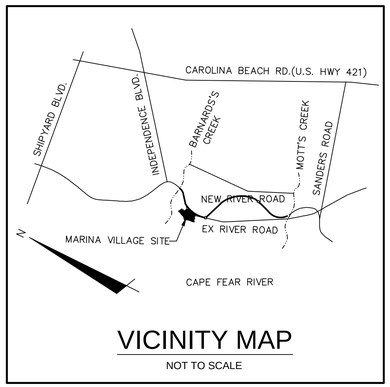

VICINITY MAP

NOT TO SCALE

RIVERLIGHTS

MARINA VILLAGE- PHASE 1B

CITY OF WILMINGTON, NC

JANUARY 2016

TECHNICAL REVIEW COMMITTEE RE-SUBMITTAL

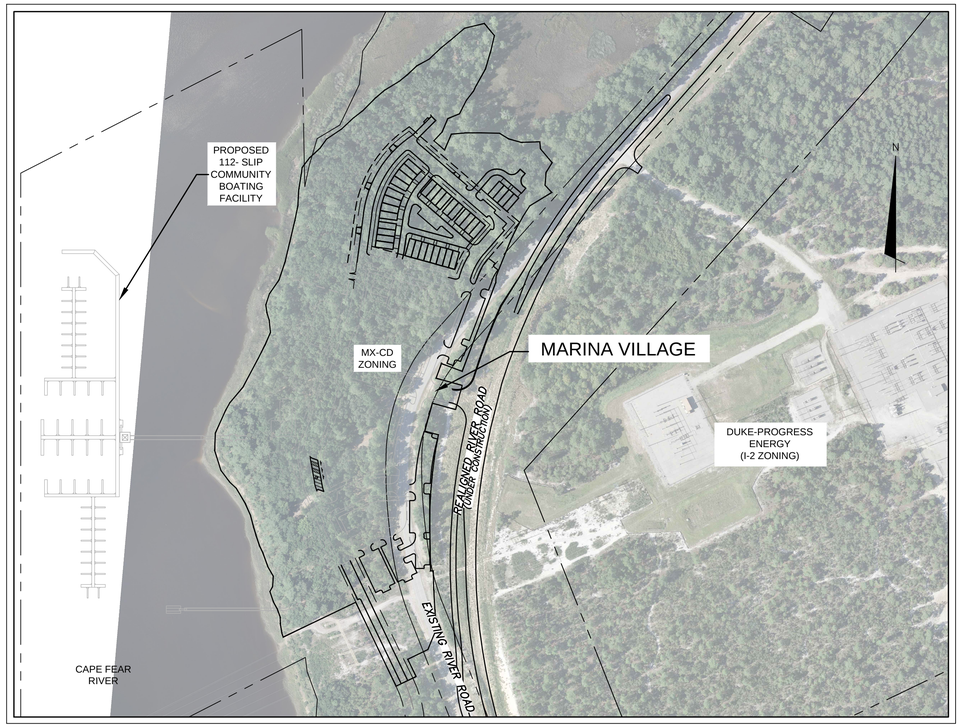

VICINITY MAP

1"=200'

SHEET INDEX		
SHEET NUMBER	SHEET TITLE	SHEET DESCRIPTION
1	G-001	COVER
2	G-002	ABBREVATIONS & LEGEND
3	G-003	GENERAL NOTES
4	CX-101	EXISTING CONDITIONS SITE INVENTORY MAP
5	CX-102	TREE REMOVAL PLAN
6	CE-101	PHASE 1 SEDIMENT & EROSION CONTROL PLAN
7	CE-102	PHASE 2 SEDIMENT & EROSION CONTROL PLAN
8	CG-101	GRADING PLAN
9	CG-102	GRADING PLAN
10	CG-103	STORM DRAINAGE PLAN
11	CS-100	OVERALL SITE PLAN
12	CS-101	SITE PLAN
13	CS-102	SITE PLAN NORTH
14	CS-103	SITE PLAN SOUTH
15	CU-101	UTILITY PLAN
16	CU-701	PLAN AND PROFILE
17	CU-702	PLAN AND PROFILE
18	CU-703	PLAN AND PROFILE
19	L-160	OVERALL PLANTING PLAN SHEET REFERENCE
20	L-161	PLANTING PLAN NORTH
21	L-162	PLANTING PLAN SOUTH
22	L-501	LANDSCAPE DETAILS
23	CN-501	STORMWATER MANAGEMENT DETAILS
24	CT-301	ROADWAY SECTIONS
25	CE-501	SEDIMENT & EROSION CONTROL DETAILS
26	CE-502	SEDIMENT & EROSION CONTROL DETAILS
27	CS-501	SITE DETAILS
28	CS-502	SITE DETAILS
29	CG-501	STORMWATER DRAINAGE DETAILS
30	CG-502	STORMWATER DRAINAGE DETAILS
31	CG-503	STORMWATER DRAINAGE DETAILS
32	WSD-1	UTILITY DETAILS
33	WSD-2	UTILITY DETAILS
34	SSD-1	UTILITY DETAILS
35	SSD-2	UTILITY DETAILS
36	SSD-3	UTILITY DETAILS
37	SSD-4	UTILITY DETAILS

CITY AND AGENCY CONTACTS

A. City of Wilmington
Planning Department
102 North Third Street
PO BOX 1810
Wilmington, NC 28402-1810
(910)341-7800
Contact: Ron Satterfield
Email: Ron.Satterfield@wilmingtonnc.gov

B. City of Wilmington
Engineering
212 Operations Center Drive
PO BOX 1810
Wilmington, NC 28402-1810
(910) 341-7807
Contact: Rob Gordon
Email: Rob.Gordon@wilmingtonnc.gov

C. New Hanover County
Sediment and Erosion Control
230 Government Center Drive, Suite 160
Wilmington, NC 28403
(910) 798-7432
Contact: Beth Wetherill
Email: BWetherill@nhcgov.com

D. Cape Fear Public Utility Authority
235 Government Center Drive
Wilmington, NC 28403
(910) 332-6626
Contact: David Dailey
Email: David.Dailey@cfpua.org

E. NCDENR
Division of Environmental Health
Public Water Supply Section
1634 Mail Service Center
Raleigh, NC 27699-1634
(919) 707-9075
Contact: Christyn Fertenbaugh
Email: christyn.fertenbaugh@ncdenr.gov

PROJECT DATA

NAME OF PROJECT:
RIVERLIGHTS - MARINA VILLAGE PHASE 1B
WILMINGTON, NORTH CAROLINA

OWNER/DEVELOPER:
NNP IV-CAPE FEAR RIVER, LLC
3410 RIVER ROAD, SUITE 103
WILMINGTON, NC 28412
PHONE: (704)813-8697
CONTACT: DOUG BROWN

PREPARED BY:
MCKIM & CREED, INC
243 NORTH FRONT ST
WILMINGTON, NC 28401
PHONE: (910)343-1048
FAX: (910)251-8282
CONTACT: NICK LAURETTA, PE, LEED AP
EMAIL: NLAURETTA@MCKIMCREED.COM

NORTH CAROLINA PROFESSIONAL ENGINEER SEAL 029102 NICHOLAS J. LAURETTA — NOT FOR CONSTRUCTION OR RECORDING PURPOSES

McKIM & CREED
243 North Front Street
Wilmington, North Carolina 28401
Phone: (910)343-1048 , Fax: (910)251-8282
License: F-1222
www.mckimcreed.com

811 Know what's below. Call before you dig.

NASH North America Sekisui House, LLC

RIVERLIGHTS by Newland COMMUNITIES

MARINA VILLAGE- PHASE 1B

02735-0124

JANUARY 2016

S:\2735\0124 Marina Village\60-Drawings\Phase 1B\G0001B-02735012 4.dwg, 1/14/2016 10:26:31 AM, AMendenhall

ABBREVIATIONS

ALT	ALTERNATE
AMP	AMPERE
ANCH	ANCHOR
Ac.	ACRE
BIT	BITUMINOUS
BLDG	BUILDING
BM	BEAM, BENCH MARK
BOTT	BOTTOM
CB	CATCH BASIN
C/C	CENTER TO CENTER
CDI	CURB DROP INLET
CFM	CUBIC FEET PER MINUTE
C&G	CURB & GUTTER
CI	CAST IRON
CIP	CAST IN PLACE
CL	CENTERLINE, CLASS
CMP	CORRUGATED METAL PIPE
CO	CLEANOUT
CONC	CONCRETE
CONC PVMT	CONCRETE PAVEMENT
COND	CONDUIT
CONST	CONSTRUCT, CONSTRUCTION
CTR	CENTER
CTV	CABLE TELEVISION
DB	DEED BOOK
DI	DROP INLET, DUCTILE IRON
DIA	DIAMETER
DISCH	DISCHARGE
DWG	DRAWING
E	EAST
EA	EACH
EAP	EXPOSED AGGREGATE PAVING
EL, ELEV	ELEVATION
ELEC	ELECTRIC, ELECTRICAL
EMER	EMERGENCY
EOP, EP	EDGE OF PAVEMENT
EQUIP	EQUIPMENT
ESMT	EASEMENT
EW	EACH WAY, END WALL
EXIST, EX	EXISTING
FL	FLOW LINE
FLG	FLANGE
FLR	FLOOR
FM	FORCE MAIN
FT	FOOT, FEET
G	GAS LINE, GUTTER
GA	GAGE
GAL	GALLON
GALV	GALVANIZED
GEN	GENERATOR
GPM	GALLONS PER MINUTE
h	HEIGHT
HP	HORSEPOWER
HWY	HIGHWAY
ID	INSIDE DIAMETER
INV	INVERT
IP	IRON PIPE, IRON PIN
IPF	IRON PIN FOUND
IR	IRON ROD
JB	JUNCTION BOX
KW	KILOWATTS
M	METER
MANUF, MFR	MANUFACTURER
MAT'L	MATERIAL
MAX	MAXIMUM
MGD	MILLION GALLONS PER DAY
MH	MANHOLE
MIN	MINIMUM
MON	MONUMENT
N	NORTH
N&C	NAIL AND CAP
NEC	NATIONAL ELECTRIC CODE
NGS	NATIONAL GEODETIC SURVEY
NIC	NOT IN CONTRACT
NO., #	NUMBER
NTS	NOT TO SCALE
OC	ON CENTER
OD	OUTSIDE DIAMETER
PI	POINT OF INTERSECTION
PL	PROPERTY LINE
PNL	PANEL
PSF	POUNDS PER SQUARE FOOT
PSI	POUNDS PER SQUARE INCH
PVC	POLYVINYL CHLORIDE/ POINT OF VERTICAL CURVE
PVMT	PAVEMENT
QTY, QUAN	QUANTITY
RCCP	REINFORCED CONCRETE CYLINDER PIPE
RCM	RECLAIMED WATER MAIN
RCP	REINFORCED CONCRETE PIPE
RED	REDUCER
REF	REFERENCE
REINF	REINFORCED, REINFORCING
REQ'D	REQUIRED
REV	REVISION
ROW, R/W	RIGHT OF WAY
RT	RIGHT
RU	REUSE WATER MAIN
RW	RAW WATER
S	SOUTH
SAN	SANITARY
SCHED	SCHEDULE
SD	STORM DRAIN
S.F.	SQUARE FEET
SHT	SHEET
SR	STATE ROUTE
STA	STATION
STD	STANDARD
S/W	SIDEWALK
TELE, TEL	TELEPHONE
TOB	TOP OF BANK
TOS	TOE OF SLOPE
TPS	TURN POINT SET
TS & V	TAPPING SLEEVE & VALVE
TYP	TYPICAL
UL	UNDERWRITERS LAB
UNO	UNLESS NOTED OTHERWISE
V	VOLT
VC	VITRIFIED CLAY
VERT	VERTICAL
VOL	VOLUME
w	WIDTH
W/	WITH
WM	WATER METER, WATER MAIN
WP	WATERPROOF, WEATHERPROOF
WSL	WATER SERVICE LINE
WV	WATER VALVE

LEGEND

DESCRIPTION	EXISTING	NEW
PROPERTY LINE		
ROAD RIGHT-OF-WAY		
UTILITY EASEMENT		
PAVED ROADWAY		
DIRT OR CRUSHED STONE ROADWAY		
STORM DRAINAGE	12"RCP	12"RCP
GAS LINE	12"G	
OVERHEAD ELECTRIC	OHE	
OVERHEAD TELEPHONE	OHT	
OVERHEAD TELEVISION	OHTV	
UNDERGROUND ELECTRIC	UGE	
UNDERGROUND TELEPHONE	UGT	
UNDERGROUND TELEVISION	UGTV	
DIRECTION OF FLOW		
GROUND ELEVATION	7.26	7.64 (TOP OF CURB) / 7.26 (EDGE OF PAVEMENT); 7.64 (SPOT EL.)
CONTOUR (MAJOR)	15	15
CONTOUR (MINOR)		12
MANHOLE		
CATCH BASIN		
INLETS		
DROP INLET (THROAT OPENING)		
UTILITY POLE		
LIGHT POLE		
SUPPORT POLE		
LANDSCAPE LIGHTING		
UTILITY PEDESTAL		
GUY WIRE		
BOLLARD	BOL	
MAILBOX	MB	
SIGN		
BENCHMARK		
TREE LINE		
SHRUB		
EXISTING IRON ROD (DISTURBED)	EIR (D)	
EXISTING IRON ROD	EIR	
LIMITS OF DISTURBANCE	LOD	
SILT FENCE	SF	
TREE PROTECTION FENCE	TP	TP
TEMPORARY DIVERSION DITCH	>TDD	
SANITARY SEWER LINE		SS
SANITARY SEWER MANHOLE		S
WATER LINE		8"W
FIRE HYDRANT	WV	
VALVE		
STORMWATER PIPE		
CITY OF WILMINGTON CONSERVATION RESOURCE SETBACK LINE	COD	COD
MEAN HIGH WATER	MHW	MHW
AREA OF ENVIRONMENTAL CONCERN	AEC	AEC
100-YEAR FLOODPLAIN (PRELIMINARY)		
100-YEAR FLOODPLAIN (EFFECTIVE)		
COASTAL MARSH LINE		
35' CONSERVATION RESOURCE VEGETATED BUFFER		
CAMA CLASSIFICATION BOUNDARY		

REV.NO.	DESCRIPTIONS	DATE
C	CITY OF WILMINGTON TECHNICAL REVIEW COMMITTEE RE-SUBMITTAL	01/07/2016
B	NEW HANOVER COUNTY EROSION AND SEDIMENT CONTROL RE-SUBMITTAL	01/04/2015
A	CITY OF WILMINGTON TECHNICAL REVIEW COMMITTEE SUBMITTAL	11/10/2015

REVISIONS

SEAL

FINAL DRAWING FOR REVIEW PURPOSES ONLY

SEAL

McKIM&CREED
243 North Front Street
Wilmington, North Carolina 28401
Phone: (910)343-1048, Fax: (910)251-8282
License: F-1222
www.mckimcreed.com

NASH — North America Sekisui House, LLC

RIVERLIGHTS™ by Newland COMMUNITIES

RIVERLIGHTS MARINA VILLAGE PHASE 1B

ABBREVIATIONS & LEGEND

DATE:	10NOV15
MCE PROJ. #	2735-0124
DRAWN	ALM
DESIGNED	NJL
CHECKED	KCBE
PROJ. MGR.	NJL

SCALE
HORIZONTAL: N/A
VERTICAL: N/A

M&C FILE NUMBER G-002
DRAWING NUMBER 2

STATUS: FINAL DESIGN
NOT FOR CONSTRUCTION
REVISION C

S:\2735\0124 Marina Village\80-Drawings\Phase 1B\G-003.dwg, 1/14/2016 10:26:55 AM, AMendenhall

CONSTRUCTION NOTES

1. CONSTRUCTION AND MATERIALS SHALL BE IN ACCORDANCE WITH NEW HANOVER COUNTY AND THE CITY OF WILMINGTON STANDARDS AND SPECIFICATIONS.
2. CONTRACTOR IS FULLY RESPONSIBLE FOR ACQUIRING THE LOCATION OF EXISTING UTILITIES FROM THE APPROPRIATE PARTIES PRIOR TO CONSTRUCTION.
3. CONTRACTOR IS RESPONSIBLE FOR PLACING BARRICADES, USING FLAGMEN, ETC. AS NECESSARY TO INSURE SAFETY TO THE PUBLIC.
4. THESE DRAWINGS SHOW INFORMATION OBTAINED FROM THE AVAILABLE RECORDS REGARDING PIPES, CONDUITS, TELEPHONE LINES, AND OTHER STRUCTURES AND CONDITIONS WHICH EXIST ALONG THE LINES OF WORK AND BELOW THE SURFACE OF THE GROUND. THE OWNER AND ENGINEER DISCLAIM ANY RESPONSIBILITIES FOR THE ACCURACY OR COMPLETENESS OF SAID INFORMATION, AND SUCH INFORMATION IS BEING SHOWN ONLY FOR THE CONVENIENCE OF THE CONTRACTOR WHO MUST VERIFY THE INFORMATION TO HIS OWN SATISFACTION DURING THE BIDDING AND CONSTRUCTION PHASES. IF THE CONTRACTOR RELIES ON SAID INFORMATION, HE DOES SO AT HIS OWN RISK. THE GIVING OF THE INFORMATION ON THE CONTRACT DRAWINGS WILL NOT RELIEVE THE CONTRACTOR OF HIS OBLIGATIONS TO SUPPORT AND PROTECT ALL PIPES, CONDUITS, TELEPHONE LINES, AND OTHER STRUCTURES, WHETHER ABOVE OR BELOW GRADE.
5. SHOULD ANY DAMAGE OCCUR TO EXISTING UTILITIES, IT SHALL BE REPAIRED SOLELY AT THE CONTRACTOR'S EXPENSE.
6. THE CONTRACTOR SHALL VERIFY EXISTING INVERTS PRIOR TO CONSTRUCTION OF UNDERGROUND UTILITIES. TEST PITTING OF EXISTING LINES PRIOR TO CONSTRUCTION, IF NECESSARY, SHALL BE COORDINATED WITH THE OWNER.
7. ALL MATERIALS AND METHODS OF CONSTRUCTION SHALL CONFORM TO THE DRAWINGS, PROJECT SPECIFICATIONS, AND LOCAL BUILDING CODES.
8. ALL DISTURBED AREAS SHALL BE SMOOTHLY GRADED TO PROMOTE POSITIVE DRAINAGE AND STABILIZED WITH TOPSOIL, SEED, AND MULCH. IF SETTLEMENT OCCURS, TOPSOIL, SEEDING, AND MULCH SHALL BE REPEATED UNTIL SETTLEMENT SUBSIDES. (SEE EROSION AND SEDIMENT CONTROL DETAILS AND SPECIFICATIONS.)
9. WATER MAINS WILL BE INSTALLED AT A DEPTH THAT WILL PROVIDE 36" COVER OVER THE PIPES BELOW PROPOSED GRADE UNLESS SHOWN OTHERWISE ON THESE PLANS OR DIRECTED OTHERWISE BY THE ENGINEER.
10. WHEREVER SEWER OR WATER MAINS CROSS ONE ANOTHER, A MINIMUM VERTICAL CLEARANCE OF 18" SHALL BE PROVIDED BETWEEN THE BOTTOM OF THE WATER PIPE AND THE TOP OF THE SEWER PIPE.
11. WHEREVER SEWER OR WATER MAINS RUN PARALLEL TO EACH OTHER, A MINIMUM HORIZONTAL SEPARATION OF 10' SHALL BE PROVIDED, OR 18" VERTICAL SEPARATION.
12. IF NEITHER OF THESE CONDITIONS (#10 OR #11 ABOVE) CAN BE MET, THEN THE SEWER SHALL BE CLASS 50 DIP, MINIMUM OF 20 LF CENTERED OVER THE CROSSING.
13. ALL WATER VALVES, BOXES, AND FIRE HYDRANT ASSEMBLES SHALL BE SET AND ADJUSTED TO FINISHED GRADE.
14. THE OWNER IS RESPONSIBLE FOR THE ACQUISITION OF ALL EASEMENTS, BOTH TEMPORARY AND PERMANENT.
15. THE CONTRACTOR SHALL VERIFY HORIZONTAL AND VERTICAL SURVEY CONTROL PRIOR TO STAKING OUT CONSTRUCTION. ANY DISCREPANCIES SHALL BE BROUGHT TO THE ATTENTION OF THE ENGINEER PRIOR TO PROCEEDING WITH WORK.
16. ANY PROPERTY LINE MONUMENTATION DISTURBED DURING CONSTRUCTION SHALL BE REPLACED SOLELY AT THE CONTRACTOR'S EXPENSE.
17. THE CONTRACTOR ASSUMES ALL RESPONSIBILITY FOR ANY DEVIATION FROM THESE PLANS.
18. FIRE HYDRANTS SHALL BE PLACED A MINIMUM DISTANCE OF 6 FEET FROM BACK OF CURB AND SHALL HAVE A CLEAR SPACE OF 3 FEET FROM ANY PERMANENT STRUCTURE PER CFPUA STANDARDS.
19. ALL SELECT AND BORROW MATERIAL SHALL MEET CRITERIA SET FORTH BY SECTIONS 1016 AND 1018 OF THE NORTH CAROLINA DEPARTMENT OF TRANSPORTATION'S STANDARDS AND SPECIFICATIONS FOR ROADS AND STRUCTURES. SEE SECTION -- FOR PLACEMENT AND COMPACTION INFORMATION.
20. THE ENGINEER AND THE CONTRACTOR SHALL INSPECT ALL EXISTING PIPES USED IN THE FINAL DRAINAGE SYSTEM AND AGREE ON THE CONDITION OF THE PIPES PRIOR TO CONSTRUCTION. IF DAMAGE OCCURS TO THESE PIPES DURING CONSTRUCTION, THE CONTRACTOR SHALL BE RESPONSIBLE FOR THE REPAIR OR REPLACEMENT OF THE PIPE(S).
21. EXISTING PAVING, CONCRETE, AND OTHER UNSUITABLE MATERIALS INCLUDING UNDERCUT EXCAVATION SHALL NOT BE USED AS FILL MATERIAL AND SHALL BE DISPOSED OF OUTSIDE THE PROJECT LIMITS AT THE CONTRACTOR'S EXPENSE. THE CONTRACTOR IS RESPONSIBLE FOR ALL PERMITTING AND FEES FOR DISPOSAL.
22. ALL TREES, STUMPS, ROOT MAT, ETC. SHALL BE ENTIRELY REMOVED REGARDLESS OF DEPTH. BURIAL OF ORGANIC MATERIAL WITHIN THE PROJECT LIMITS IS NOT PERMITTED. OPEN BURNING OF DOWNED TREES AND STUMPS IS NOT PERMITTED. CHIPPED MATERIALS MUST BE REMOVED PRIOR TO THE PLACEMENT OF EMBANKMENT OR TOPSOIL.
23. THE CONTRACTOR IS SOLELY RESPONSIBLE TO OBTAIN OFF-SITE SPOIL AREAS FOR DISPOSAL OF EXCESS AND/OR UNSUITABLE MATERIALS AS NECESSARY. OFF-SITE SPOIL AREAS MUST BE SUBMITTED TO THE ENGINEER AND APPLICABLE REGULATORY AGENCIES PRIOR TO UTILIZATION BY THE CONTRACTOR. NO AREAS DESIGNATED AS WETLANDS WILL BE PERMITTED FOR USE AS A DISPOSAL SITE. THE CONTRACTOR SHALL SUBMIT DOCUMENTATION TO THE ENGINEER THAT NO WETLANDS WILL BE IMPACTED. THE ENGINEER WILL NOT CONSIDER ANY DELAYS OR MONETARY CLAIMS OF ANY NATURE RESULTING FROM THE CONTRACTOR'S FAILURE OR DIFFICULTY IN FINDING NECESSARY DISPOSAL SITES TO MEET THE TIME FRAMES AND CAPACITIES REQUIRED. THE CONTRACTOR SHALL BE RESPONSIBLE FOR ALL PLANS, PERMITS, EROSION AND SEDIMENT CONTROL MEASURES, ETC. REQUIRED BY THE APPROPRIATE REGULATORY AGENCIES FOR UTILIZING OFF-SITE SPOIL AREAS. THE CONTRACTOR SHALL CERTIFY TO THE ENGINEER THAT ALL REQUIRED PERMITS HAVE BEEN OBTAINED PRIOR TO UTILIZING THE OFF-SITE SPOIL AREAS. ALL COSTS FOR PROCURING AND UTILIZING THE OFF-SITE SPOIL AREAS ARE TO BE INCIDENTAL TO THE BASE BID.

DEMOLITION NOTES

1. THE CONTRACTOR SHALL VISIT THE SITE TO BECOME FAMILIARIZED WITH FIELD DEMOLITION CONDITIONS.
2. THE CONTRACTOR IS RESPONSIBLE FOR THE PROPER DISPOSAL OF ALL DEMOLISHED DEBRIS ASSOCIATED WITH THE PROJECT IN ACCORDANCE WITH THE PROJECT SPECIFICATIONS.
3. THE CONTRACTOR IS RESPONSIBLE FOR CONTROLLING DUST GENERATED BY THE WORK, INCLUDING BUT NOT LIMITED TO DEMOLITION AND CONSTRUCTION ACTIVITIES, SITE VEHICULAR TRAFFIC AND RELATED OPERATIONS.
4. THE CONTRACTOR IS RESPONSIBLE FOR HAVING ALL EXISTING UTILITIES LOCATED PRIOR TO BEGINNING ANY DEMOLITION. CONTRACTOR SHALL CONTACT NC ONE CALL AT LEAST 72 HOURS PRIOR TO BEGINNING CONSTRUCTION OR EXCAVATION TO HAVE EXISTING UTILITIES LOCATED.
5. EXISTING UTILITIES AND STRUCTURES SHOWN, BOTH UNDERGROUND AND ABOVE GROUND, ARE BASED ON FIELD SURVEY AND THE BEST AVAILABLE RECORD DRAWINGS. THE CONTRACTOR SHALL VERIFY FIELD CONDITIONS PRIOR TO BEGINNING RELATED CONSTRUCTION. ANY DISCREPANCIES SHALL BE REPORTED TO THE OWNER'S REPRESENTATIVE AND ENGINEER IMMEDIATELY.
6. THE CONTRACTOR IS RESPONSIBLE FOR THE COORDINATION OF DISCONNECTING AND ABANDONING ALL EXISTING UTILITIES WITH THE OWNER UNLESS OTHERWISE NOTED. ALL EXISTING UTILITIES AND ASSOCIATED PIPING, ETC. NOT IN USE ON THE SITE SHALL BE PROPERLY ABANDONED AND REMOVED AS REQUIRED. COORDINATE WITH THE OWNER.
7. THE CONTRACTOR IS RESPONSIBLE FOR THE PROTECTION OF ANY EXISTING UTILITIES THAT REMAIN IN SERVICE DURING DEMOLITION.
8. THE CONTRACTOR IS RESPONSIBLE FOR STABILIZATION OF ALL DISTURBED AREAS AND SLOPES ON AND OFF SITE IN ACCORDANCE WITH THE EROSION CONTROL MEASURES SPECIFIED ON THE PLANS AND IN THE SPECIFICATIONS. THE CONTRACTOR SHALL COORDINATE WITH THE OWNER TO DETERMINE WHO IS RESPONSIBLE FOR PROVIDING THE PERMANENT STABILIZATION MEASURES AND THE TYPE OF PERMANENT MEASURES PRIOR TO BEGINNING DEMOLITION AND CONSTRUCTION. THE PERMANENT STABILIZATION MEASURES SHALL BE IN PLACE AND ACCEPTABLE TO THE OWNER'S REPRESENTATIVE AND ENGINEER PRIOR TO PROJECT CLOSEOUT. COORDINATE INSPECTION WITH THE OWNER AND ENGINEER PRIOR TO PROJECT CLOSEOUT.
9. THE CONTRACTOR IS RESPONSIBLE FOR COORDINATING AND CONTACTING THE ENGINEER FOR THE REQUIRED INSPECTIONS ON THE PROJECT.
10. WETLANDS DO EXIST ON SITE AND ARE NOTED ON THE PLANS. UNLESS OTHERWISE INDICATED, THE WETLANDS SHALL NOT BE DISTURBED DURING CONSTRUCTION OF THIS PROJECT.

EXCAVATION, GRADING, AND BACKFILLING NOTES

1. ANY UNDERCUTTING IN GOOD SOIL SHALL BE REPLACED AND THE REPLACEMENT MATERIAL SHALL BE COMPACTED TO NINETY-FIVE (95) PERCENT OF MAXIMUM DENSITY OBTAINED AT OPTIMUM MOISTURE CONTENT, AS DETERMINED BY THE ASTM D 698 STANDARD PROCTOR TEST METHOD. IN THE EVENT THAT MATERIAL ENCOUNTERED AT PIPE GRADE, SUBGRADE OF PARKING OR ROADWAYS AND SUBGRADE OF BUILDING FOUNDATIONS IS FOUND TO BE SOFT, SPONGY, OR IN ANY OTHER WAY UNSUITABLE, THE CONTRACTOR SHALL NOTIFY THE GEOTECHNICAL ENGINEER IMMEDIATELY. SUCH UNSUITABLE MATERIAL SHALL BE REMOVED TO A DEPTH AS SPECIFIED BY THE GEOTECHNICAL ENGINEER AND REPLACED WITH A MINIMUM OF SIX (6) INCHES OF STONE, OR AS DIRECTED BY THE GEOTECHNICAL ENGINEER.
2. BEFORE BACKFILLING IS COMMENCED OVER PIPES AND OTHER INSTALLATIONS, EARTH FILL SHALL BE SOLIDLY TAMPED AROUND AND ABOVE THE PIPE TO A DEPTH OF ONE (1) FOOT ABOVE THE TOP OF THE PIPE. CARE SHALL BE TAKEN TO PREVENT ANY DISTURBANCE TO THE PIPE OR DAMAGE TO NEWLY MADE JOINTS. THE FILLING OF THE TRENCH SHALL BE CARRIED OUT SIMULTANEOUSLY ON BOTH SIDES OF THE PIPES IN SUCH A MANNER THAT INJURIOUS SIDE PRESSURES DO NOT OCCUR.
3. THE MATERIAL FOR BACKFILLING SHALL BE FREE FROM ALL PERISHABLE AND OBJECTIONABLE MATERIALS. BEFORE PLACING ANY BACKFILL, ALL RUBBISH, FORM, BLOCKS, WIRES OR OTHER UNSUITABLE MATERIAL SHALL BE REMOVED FROM EXCAVATION. THE BACK-FILLING OVER PIPES SHALL BE PLACED IN LAYERS NOT OVER SIX (6) INCHES THICK AND COMPACTED TO A MINIMUM DENSITY OF NINETY-FIVE (95) PERCENT OF THE MAXIMUM DRY DENSITY AS DETERMINED BY THE MODIFIED PROCTOR COMPACTION TEST TO A DEPTH OF 12 INCHES BELOW FINISHED GRADE. THE LAST 12 INCHES OF BACKFILL SHALL BE PLACED IN LAYERS NOT OVER SIX (6) INCHES THICK AND COMPACTED TO A MINIMUM DENSITY OF NINETY-EIGHT (98) PERCENT OF THE MAXIMUM DRY DENSITY AS DETERMINED BY THE MODIFIED PROCTOR COMPACTION TEST.

STORM DRAINAGE AND GRADING NOTES

1. IN ACCORDANCE WITH NC GENERAL STATUTES, NPDES REGULATIONS, AND NCDENR REQUIREMENTS, STORMWATER DISCHARGE OUTFALLS SHALL BE INSPECTED BY THE CONTRACTOR. INSPECTIONS SHALL BE PERFORMED BY THE CONTRACTOR ONCE A WEEK AND WITHIN 24 HOURS OF EACH STORM EVENT OF 1/2 INCH OR GREATER. NCDENR STANDARD INSPECTION REPORTS SHALL BE COMPLETED ONCE A WEEK AND WITHIN 24 HOURS OF EVERY 1/2 INCH OR GREATER RAINFALL WITH COPIES PROVIDED TO THE OWNER, ARCHITECT, AND ENGINEER, BY THE CONTRACTOR.
2. INLET PROTECTION SHALL BE INSTALLED AROUND OUTFALL. DEVICES SHALL BE CONSTRUCTED TO FINAL PROPOSED CONDITION UPON STABILIZATION OF CONTRIBUTING GROUND SURFACES AND REMOVAL OF SEDIMENT FROM STORM PIPES.
3. ALL DIMENSIONS AND GRADES SHOWN ON THE PLANS SHALL BE FIELD VERIFIED BY THE CONTRACTOR PRIOR TO CONSTRUCTION. CONTRACTOR SHALL NOTIFY CONSTRUCTION MANAGER IF ANY DISCREPANCIES EXIST PRIOR TO PROCEEDING WITH CONSTRUCTION FOR NECESSARY PLAN OR GRADE CHANGES. NO EXTRA COMPENSATION SHALL BE PAID TO CONTRACTOR FOR ANY WORK DONE DUE TO DIMENSIONS OR GRADES SHOWN INCORRECTLY ON THESE PLANS IF SUCH NOTIFICATION HAS NOT BEEN GIVEN.
4. UNLESS OTHERWISE NOTED, GRADES AND SPOT ELEVATIONS NOTED ON PLANS INDICATE FINISHED GRADE OR PAVEMENT SURFACE. ALL DIMENSIONS ARE MEASURED TO THE BACK OF CURB UNLESS OTHERWISE INDICATED.

UTILITY NOTES

1. SCHEDULE A PRECONSTRUCTION MEETING WITH CAPE FEAR PUBLIC UTILITY AUTHORITY 48 HOURS PRIOR TO CONSTRUCTION OF WATER AND SEWER LINES.
2. WATER AND SANITARY SEWER UTILITY MAINS ARE CONTAINED WITH PUBLIC DRAINAGE EASEMENTS. MAINS ARE PRIVATE BEYOND THE PUBLIC UTILITY EASEMENT.
3. THIS PROJECT SHALL COMPLY WITH THE CFPUA CROSS CONNECTION CONTROL REQUIREMENTS. WATER METER(S) CANNOT BE RELEASED UNTIL ALL REQUIREMENTS ARE MET AND NCDENR HAS ISSUED THE "FINAL APPROVAL".
4. ALL COMMERCIAL WATER SERVICES AND ANY IRRIGATION SYSTEMS SUPPLIED BY CFPUA WATER SHALL HAVE A BACKFLOW PREVENTION DEVICE ACCEPTABLE TO CFPUA AND APPROVED BY USCFCCCHR OR ASSE.
5. BACKFLOW PREVENTION WILL BE PROVIDED FOR BOTH FIRE LINES (RPDA) AND COMMERCIAL DOMESTIC SERVICE (RPZ). FIRE LINE BACKFLOW PREVENTER AND DOMESTIC SERVICE BACKFLOW PREVENTER WILL BE LOCATED AS SHOWN ON THE UTILITY PLANS. INSTALLER OF BACKFLOW PREVENTERS MUST CONTACT CFPUA PRIOR TO INSTALLING UNITS TO GIVE CFPUA THE OPTION TO VERIFY INSTALLATION PROCEDURES.
   - 5.1. REDUCED PRESSURE PRINCIPLE ASSEMBLY FOR DOMESTIC WATER SERVICE
   - 5.2. REDUCE PRESSURE DETECTOR ASSEMBLY WILL BE UTILIZED FOR THE BACKFLOW PREVENTER ON THE FIRE SERVICE.
6. IF THE CONTRACTOR DESIRES CFPUA WATER FOR CONSTRUCTION HE SHALL APPLY IN ADVANCE FOR THIS SERVICE AND MUST PROVIDE A REDUCED PRESSURE ZONE (RPZ) BACKFLOW PREVENTION DEVICE ON THE DEVELOPER'S SIDE OF THE WATER METER BOX.
7. WATER: 2" PVC MAINS SHALL BE CONSTRUCTED USING ASTM D2241, IPS, GASKETED PIPE, SDR 21. 4"-12" PVC MAINS AND SERVICES SHALL BE CONSTRUCTED USING AWWA C-900 PVC, CL150 (DR-18).
8. SANITARY SEWER: FOR PIPE SIZES 4" AND 6" PIPE SHALL BE SCH 40 CONFORMING TO THE REQUIREMENTS OF ASTM D1785 WITH SOLVENT WELD JOINTS CONFORMING TO ASTM D2672. FOR PIPE SIZES 8" THROUGH 12", PIPE SHALL BE CLASS 150, DR18 CONFORMING TO THE REQUIREMENTS OF AWWA C900 WITH ELASTOMERIC PUSH-ON JOINTS CONFORMING TO ASTM D3212 OR ASTM D3139.
9. WATER AND SEWER SERVICES CANNOT BE ACTIVATED ON NEW MAINS UNTIL ENGINEER'S CERTIFICATION AND AS-BUILTS ARE RECEIVED AND "FINAL APPROVAL" ISSUED BY PUBLIC WATER SUPPLY SECTION OF NCDENR AND "FINAL ENGINEERING CERTIFICATION" ISSUED BY DIVISION OF WATER QUALITY OF NCDENR.
10. PVC WATER MAINS AND POLYETHYLENE SERVICES ARE TO BE MARKED WITH NO. 10 SINGLE STRAND INSULATED COPPER WIRE INSTALLED THE ENTIRE LENGTH AND STRAPPED TO THE PIPES WITH DUCT TAPE. THE INSULATED WIRE IS TO BE STRIPPED TO BARE WIRE AND SECURED TO ALL VALVES. THIS WIRE IS TO BE ACCESSIBLE AT ALL FIRE HYDRANTS AND WATER METER BOXES TO AID IN FUTURE LOCATION OF FACILITIES.
11. SITE UTILITY CONTRACTOR TO PROVIDE WATER AND SANITARY SEWER SERVICE TO WITHIN 5 FEET OF THE BUILDING. CONTRACTOR SHALL COORDINATE SITE PLAN CONNECTIONS WITH THE ARCHITECTURAL BUILDING PLANS.
12. MAXIMUM BENDING RADIUS FOR 8" C-900 PVC WATER MAIN BENDS IS 380' (ONE-HALF MANUFACTURER'S RECOMMENDED ALLOWABLE LONGITUDINAL BENDING).
13. FIRE SPRINKLERS WILL BE PROVIDED FOR BUILDING.
14. UNDERGROUND UTILITIES: ALL NEW UTILITIES SHALL BE INSTALLED UNDERGROUND, EXCEPT WHERE SUCH PLACEMENT IS PROHIBITED OR DEEMED IMPRACTICAL BY THE UTILITY PROVIDER. UNDERGROUND TERMINAL FACILITIES FOR STREET LIGHTING ALONG THE PUBLIC STREETS ABUTTING THE SUBJECT SITE SHALL BE INSTALLED BY THE DEVELOPER.
15. MINIMUM OF 36" COVERAGE ABOVE ALL WATERMAINS.
16. MINIMUM OF 36" VERTICAL SEPARATION BETWEEN WATERLINES AND STORMDRAIN CURB INLETS.

RELATION OF WATER MAINS TO SANITARY SEWERS:

1. LATERAL SEPARATION OF SANITARY SEWERS AND WATER MAINS: WATER MAINS SHALL BE LAID AT LEAST 10 FEET LATERALLY FROM EXISTING OR PROPOSED SEWERS UNLESS LOCAL CONDITIONS OR BARRIERS PREVENT A 10 FOOT LATERAL SEPARATION, IN WHICH CASE:
   - 1.1. THE WATER MAIN IS LAID IN A SEPARATE TRENCH, WITH THE ELEVATION OF THE BOTTOM OF THE WATER MAIN AT LEAST 18 INCHES ABOVE THE TOP OF THE SEWER, OR
   - 1.2. THE WATER MAIN IS LAID IN THE SAME TRENCH AS THE SEWER WITH THE WATER MAIN LOCATED AT ONE SIDE ON A BENCH OF UNDISTURBED EARTH, AND ABOVE THE TOP OF THE SEWER.
2. CROSSING A WATER MAIN OVER A SEWER MAIN: WHENEVER IT IS NECESSARY FOR A WATER MAIN TO CROSS OVER A SEWER THE WATER MAIN SHALL BE LAID AT SUCH AN ELEVATION THAT THE BOTTOM OF THE WATER MAIN IS AT LEAST 24 INCHES ABOVE THE TOP OF THE SEWER MAIN. UNLESS LOCAL CONDITIONS OR BARRIERS PREVENT AN 18 INCH VERTICAL SEPARATION – IN WHICH CASE BOTH THE WATER MAIN AND THE SEWER MAIN SHALL BE CONSTRUCTED OF FERROUS MATERIALS AND WITH JOINTS THAT ARE EQUIVALENT TO WATER MAIN STANDARDS FOR A DISTANCE OF 10 FEET ON EACH SIDE OF THE POINT OF CROSSING.
3. CROSSING A WATER MAIN UNDER A SEWER MAIN: WHENEVER IT IS NECESSARY FOR A WATER MAIN TO CROSS UNDER A SEWER MAIN BOTH THE WATER MAIN AND THE SEWER MAIN SHALL BE CONSTRUCTED OF FERROUS MATERIALS AND WITH JOINTS EQUIVALENT TO WATER MAIN STANDARDS FOR A DISTANCE OF 10 FEET ON EACH SIDE OF THE POINT OF CROSSING.
4. CROSSING A SEWER MAIN/WATER MAIN OVER OR UNDER A STORM DRAIN: WHENEVER IT IS NECESSARY FOR A SEWER MAIN/WATER MAIN TO CROSS A STORM DRAIN PIPE, THE SEWER MAIN/WATER MAIN SHALL BE LAID AT SUCH AN ELEVATION THAT THE OUTSIDE OF THE SEWER MAIN/WATER MAIN NEAREST TO THE OUTSIDE OF THE STORM DRAIN PIPE SHALL MAINTAIN A 24 INCH CLEAR SEPARATION DISTANCE HORIZONTAL, OR THE SEWER MAIN/WATER MAIN SHALL EITHER BE CONSTRUCTED OF DUCTILE IRON PIPE OR DUCTILE IRON PIPE FOR AT LEAST 5 FEET ON EITHER SIDE OF THE CROSSING.
5.

MATERIALS AND EASEMENT NOTES:

- ALL CATCH BASINS ARE NCDOT STD 840.01
- ALL DROP INLETS IN TRAFFIC AREAS ARE NCDOT STD 840.35, ALL DROP INLETS IN LANDSCAPE AREAS ARE CITY OF WILMINGTON STD 2-02 & 14-04.
- ALL STORM DRAINAGE PIPING TO BE CLASS III RCP, UNLESS OTHERWISE NOTED
- ALL STORM DRAINAGE PIPING CONVEYING DISCHARGE FROM THE PUBLIC RIGHT-OF-WAY SHALL BE CONTAINED WITHIN A PUBLIC DRAINAGE EASEMENT WHOSE WIDTH IS DETERMINED BY THE DEPTH OF BURY
- A PUBLIC UTILITY EASEMENT SHALL BE RESERVED WITHIN THE STREET RIGHT-OF-WAY. A 10' NON-MUNICIPAL EASEMENT SHALL BE RESERVED ALONG BOTH SIDES OF ALL STREETS
- WATER AND SANITARY SEWER UTILITIES ARE PUBLIC – CAPE FEAR PUBLIC UTILITY AUTHORITY

EROSION CONTROL NOTES

1. ANY GRADING BEYOND THE DENUDED LIMITS SHOWN ON THE PLAN IS A VIOLATION OF THE COUNTY EROSION CONTROL ORDINANCE AND IS SUBJECT TO A FINE.
2. GRADING MORE THAN ONE ACRE WITHOUT AN APPROVED EROSION CONTROL PLAN IS A VIOLATION OF STATE LAW AND IS SUBJECT TO A FINE.
3. GROUND COVER MUST BE PROVIDED ON EXPOSED SLOPES WITHIN 21 CALENDAR DAYS FOLLOWING COMPLETION OF ANY PHASE OF GRADING; AND, A PERMANENT GROUND COVER FOR ALL DISTURBED AREAS WITHIN 15 WORKING DAYS OR 90 CALENDAR DAYS (WHICHEVER IS SHORTER) FOLLOWING COMPLETION OF CONSTRUCTION OR DEVELOPMENT.
4. ADDITIONAL MEASURES TO CONTROL EROSION AND SEDIMENT MAY BE REQUIRED BY A REPRESENTATIVE OF NEW HANOVER COUNTY.
5. SLOPES SHALL BE GRADED NO STEEPER THAN 3:1.
6. ADDITIONAL DEVICES MAY BE REQUIRED AS AGREED UPON BY THE FIELD INSPECTOR, ENGINEER, AND OWNER.
7. IF ACTIVE CONSTRUCTION CEASES IN ANY AREA FOR MORE THAN 15 WORKING DAYS OR 90 CALENDAR DAYS (WHICHEVER IS SHORTER), ALL DISTURBED AREAS MUST BE SEEDED, MULCHED, AND TACKED.
8. WITHIN 24 HOURS FOLLOWING ANY RAIN EVENT, THE CONTRACTOR SHALL INSPECT AND REPAIR, AS NECESSARY, ALL DAMAGED EROSION CONTROL MEASURES.
9. ALL ACTIVITY AND INSTALLATION OF EROSION CONTROL MATTING WILL BE COMPLETE PRIOR TO ANY RAIN EVENT.

EROSION CONTROL MAINTENANCE PLAN:

1. ALL SEDIMENT AND EROSION CONTROL DEVICES SHALL BE INSPECTED AND REPAIRED, AS NECESSARY, EVERY SEVEN (7) DAYS AND WITHIN 24 HOURS OF EVERY ONE-HALF (0.5) INCH OR GREATER RAINFALL OCCURRENCE.
2. ALL EROSION CONTROL DEVICES SHALL BE PROPERLY MAINTAINED DURING ALL PHASES OF CONSTRUCTION UNTIL THE COMPLETION OF ALL CONSTRUCTION ACTIVITIES AND ALL DISTURBED AREAS HAVE BEEN STABILIZED. ADDITIONAL CONTROL DEVICES MAY BE REQUIRED DURING CONSTRUCTION IN ORDER TO CONTROL EROSION AND/OR OFFSITE SEDIMENTATION. ALL TEMPORARY CONTROL DEVICES SHALL BE REMOVED ONCE CONSTRUCTION IS COMPLETE AND THE SITE IS STABILIZED.
3. SEDIMENT SHALL BE REMOVED FROM BEHIND THE SILT FENCE WHEN IT BECOMES ABOUT 0.5 FEET DEEP. THE SEDIMENT FENCE WILL BE REPAIRED OR REPLACED AS NECESSARY TO MAINTAIN A BARRIER.
4. ALL AREAS WILL BE FERTILIZED, RESEEDED AS NECESSARY, AND MULCHED ACCORDING TO SPECIFICATIONS IN THE VEGETATIVE PLAN TO MAINTAIN A VIGOROUS, DENSE VEGETATIVE COVER.
5. STONE CONSTRUCTION ENTRANCE TO BE CLEANED WHEN SEDIMENT ACCUMULATIONS ARE VISIBLE OR SEDIMENT IS TRACKED ON TO THE PAVEMENT. STONE WILL BE PERIODICALLY TOP DRESSED WITH 2 INCHES OF #4 STONE TO MAINTAIN 6 INCH DEPTH. THE CONTRACTOR SHALL DAILY REMOVE MUD/SOIL FROM PAVEMENT, AS REQUIRED.
6. INSPECT TEMPORARY DIVERSIONS AND CHECK DAMS ONCE A WEEK AND AFTER EVERY RAINFALL. IMMEDIATELY REMOVE SEDIMENT FROM THE FLOW AREA AND REPAIR THE DIVERSION RIDGE AND CHECK DAM. CAREFULLY CHECK OUTLETS AND MAKE TIMELY REPAIRS AS NEEDED. WHEN THE AREA PROTECTED IS PERMANENTLY STABILIZED, REMOVE THE RIDGE AND THE CHANNEL TO BLEND WITH THE NATURAL GROUND LEVEL AND APPROPRIATELY STABILIZE IT.
7. INSPECT TEMPORARY SEDIMENT BASINS AT LEAST WEEKLY AND AFTER EACH SIGNIFICANT (1/2" OR GREATER) RAINFALL EVENT AND REPAIR IMMEDIATELY. REMOVE SEDIMENT AND RESTORE THE BASIN TO ITS ORIGINAL DIMENSIONS WHEN IT ACCUMULATES TO ONE-HALF THE DESIGN DEPTH. PLACE REMOVED SEDIMENT IN AN AREA WITH SEDIMENT CONTROLS.
8. CHECK THE SEDIMENT BASIN EMBANKMENT, SPILLWAYS, AND OUTLET FOR EROSION DAMAGE, AND INSPECT THE EMBANKMENT FOR PIPING AND SETTLEMENT. MAKE ALL NECESSARY REPAIRS IMMEDIATELY. REMOVE ALL TRASH AND OTHER DEBRIS FROM THE RISER AND POOL AREA.
9. INSPECT INLETS AT LEAST WEEKLY AND AFTER EACH SIGNIFICANT (0.5" OR GREATER) RAINFALL EVENT. CLEAR THE MESH WIRE OF ANY DEBRIS OR OTHER OBJECTS TO PROVIDE ADEQUATE FLOW FOR SUBSEQUENT RAINS. TAKE CARE NOT TO DAMAGE OR UNDERCUT THE WIRE MESH DURING SEDIMENT REMOVAL. REPLACE STONE AS NEEDED. INLET PROTECTION SHOULD BE CLEANED OUT WHEN IT IS HALF FULL.
10. INSPECT TEMPORARY SEDIMENT TRAPS AT LEAST WEEKLY AND AFTER EACH SIGNIFICANT (1/2" OR GREATER) RAINFALL EVENT AND REPAIR IMMEDIATELY. REMOVE SEDIMENT AND RESTORE THE TRAP TO ITS ORIGINAL DIMENSIONS WHEN IT ACCUMULATES TO ONE-HALF THE DESIGN DEPTH. PLACE REMOVED SEDIMENT IN AN AREA WITH SEDIMENT CONTROLS.
11. REPAIR THE BAFFLES IF THEY ARE DAMAGED. RE-ANCHOR THE BAFFLES IF WATER IS FLOWING UNDERNEATH OR AROUND THEM.
12. INSPECT THE SKIMMER FOR CLOGGING. PULL THE SKIMMER TO THE SIDE OF THE BASIN AND REMOVE ANY DEBRIS. ALSO CHECK THE ORIFICE INSIDE THE SKIMMER AND THE ARM OR BARREL PIPE FOR CLOGGING; IF CLOGGED, REMOVE THE DEBRIS.

NOTE (G.S. 113A-57 (2))

THE ANGLE FOR GRADED SLOPES AND FILLS SHALL BE NO GREATER THAN THE ANGLE THAT CAN BE RETAINED BY VEGETATIVE COVER OR OTHER ADEQUATE EROSION CONTROL DEVICES OR STRUCTURES. IN ANY EVENT, SLOPES LEFT EXPOSED WILL, WITHIN 21 CALENDAR DAYS OF COMPLETION OF ANY GRADING, BE PLANTED OR OTHERWISE PROVIDED WITH TEMPORARY OR PERMANENT GROUND COVER, DEVICES, OR STRUCTURES SUFFICIENT TO RESTRAIN EROSION.

CITY OF WILMINGTON STANDARD NOTES

1. CONTACT THE NORTH CAROLINA ONE CALL CENTER PRIOR TO DOING ANY DIGGING AT 1-800-632-4949.
2. PRIOR TO ANY CLEARING, GRADING OR CONSTRUCTION ACTIVITY, TREE PROTECTION FENCING SHALL BE INSTALLED AROUND PROTECTED TREES OR GROVES OF TREES AND NO CONSTRUCTION WORKERS, TOOLS, MATERIALS, OR VEHICLES ARE PERMITTED WITHIN THE TREE PROTECTION FENCING.
3. ALL PAVEMENT MARKINGS IN PUBLIC RIGHTS-OF-WAY AND FOR DRIVEWAYS ARE TO BE THERMOPLASTIC AND MEET CITY AND/OR NCDOT STANDARDS.
4. ONCE STREETS ARE OPEN TO TRAFFIC, THE DEVELOPER SHALL CONTACT TRAFFIC ENGINEERING TO REQUEST INSTALLATION OF TRAFFIC AND STREET NAME SIGNS. PROPOSED STREET NAMES MUST BE APPROVED PRIOR TO INSTALLATION OF STREET NAME SIGNS.
5. TRAFFIC CONTROL DEVICES (INCLUDING SIGNS AND PAVEMENT MARKINGS) IN AREAS OPEN TO PUBLIC TRAFFIC ARE TO MEET MUTCD (MANUAL ON UNIFORM TRAFFIC CONTROL DEVICES) STANDARDS.
6. ANY BROKEN OR MISSING SIDEWALK PANELS AND CURBING SHALL BE REPLACED BY THE CONTRACTOR.
7. CONTACT CITY OF WILMINGTON AT 341-7888 TO DISCUSS STREET LIGHTING OPTIONS.
8. IF THE CONTRACTOR DESIRES WATER FOR CONSTRUCTION HE SHALL APPLY WITH THE CAPE FEAR PUBLIC UTILITY AUTHORITY IN ADVANCE FOR THIS SERVICE AND MUST PROVIDE A REDUCED PRESSURE ZONE (RPZ) BACKFLOW PREVENTION DEVICE ON THE DEVELOPER'S SIDE OF THE WATER METER BOX.
9. THE NUMBER AND SPACING OF DRIVEWAYS FOR ALL INTERCONNECTED SITES WILL BE DETERMINED BY THE COMBINED FRONTAGE OF THE INTERCONNECTED PROPERTIES.
10. CONTACT TRAFFIC ENGINEERING TO ENSURE THAT ALL TRAFFIC SIGNAL FACILITIES AND EQUIPMENT ARE SHOWN ON THE PLAN. CALL TRAFFIC ENGINEERING FORTY-EIGHT HOURS PRIOR TO ANY EXCAVATION IN THE RIGHT-OF-WAY.
11. TACTILE WARNING MATS ARE TO BE INSTALLED ON ALL WHEELCHAIR RAMPS.
12. NO LAND DISTURBANCE INCLUDING TREE REMOVAL IS TO OCCUR OUTSIDE THE LIMITS OF DISTURBANCE SHOWN ON THE PLANS.

NOTE COW(18-458)

NO EQUIPMENT IS ALLOWED ONSITE UNTIL ALL TREE PROTECTION FENCING AND SILT FENCING HAS BEEN INSTALLED AND APPROVED BY THE ENGINEER.

FIRE PROTECTION NOTES

1. HYDRANT MUST BE WITHIN 150' OF THE FDC.
2. THE FDC MUST BE WITHIN 40' OF FIRE APPARATUS PLACEMENT.
3. LANDSCAPING OR PARKING CANNOT BLOCK OR IMPEDE THE FDC OR FIRE HYDRANTS. A 3-FOOT CLEAR SPACE SHALL BE MAINTAINED AROUND THE CIRCUMFERENCE OF THE HYDRANT AND FDC.
4. HYDRANTS MUST BE LOCATED WITHIN 8' OF THE CURB PER CITY OF WILMINGTON STANDARDS. HYDRANTS WILL BE LOCATED WITHIN 6' OF THE CURB PER CFPUA STANDARDS.
5. COMBUSTIBLE MATERIALS MAY NOT BE STORED OR ERECTED ONSITE WITHOUT CITY FIRE INSPECTOR APPROVAL.
6. NEW HYDRANTS MUST BE AVAILABLE FOR USE PRIOR TO CONSTRUCTION OF THE BUILDING(S).
7. UNDERGROUND FIRE LINE AND PRIVATE WATER MAINS MUST BE PERMITTED AND INSPECTED BY THE WILMINGTON FIRE DEPARTMENT FROM THE PUBLIC RIGHT-OF-WAY TO THE BUILDING. CONTACT THE WILMINGTON FIRE DEPARTMENT DIVISION OF FIRE AND LIFE SAFETY AT 910-343-0696 FOR ADDITIONAL INFORMATION.
8. A MINIMUM OF 5' SHALL SEPARATE UNDERGROUND FIRE LINES OR PRIVATE WATER MAINS FROM UNDERGROUND UTILITIES
9. CONTRACTOR SHALL MAINTAIN AN ALL WEATHER ACCESS FOR EMERGENCY VEHICLES AT ALL TIMES DURING CONSTRUCTION.
10. TEMPORARY STREET SIGNS SHALL BE INSTALLED AT EACH STREET INTERSECTION WHEN CONSTRUCTION OF NEW ROADWAYS ALLOWS PASSAGE BY VEHICLES.

UTILITY COMPANY CONTACTS

DUKE/PROGRESS ENERGY: SID LIVINGSTON/MARK HATFIELD (910) 452-2777

DUKE ENERGY (TRANSMISSION): BILL WILDER (910) 772-4903

AT&T (BELLSOUTH): JAMES BATSON (910) 452-5300

TIME WARNER CABLE: ROBERT JOHN (910) 216-4494

PIEDMONT NATURAL GAS: PAUL GONKA (910) 512-2841
DJ MEDEIROS (910) 431-3233

CAPE FEAR PUBLIC UTILITY AUTHORITY (910) 332-6550

GROUND STABILIZATION CRITERIA

SITE AREA DESCRIPTION	STABILIZATION TIMEFRAME	STABILIZATION TIMEFRAME EXCEPTIONS
PERIMETER DIKES, SWALES, DITCHES AND SLOPES	7 DAYS	NONE
HIGH QUALITY WATER ZONES	7 DAYS	NONE
SLOPES STEEPER THAN 3:1	7 DAYS	IF SLOPES ARE 10 FT OR LESS IN IN LENGTH AND ARE NOT STEEPER THAN 2:1, 14 DAYS ARE ALLOWED
SLOPES 3:1 OR FLATTER	14 DAYS	7 DAYS FOR SLOPES GREATER THAN 50 FT IN LENGTH
ALL OTHER AREAS WITH SLOPES FLATTER THAN 4:1	14 DAYS	NONE (EXCEPT FOR PERIMETERS AND HQW ZONES)

REV.NO.	DESCRIPTIONS	DATE
C	CITY OF WILMINTGON TECHNICAL REVIEW COMMITTEE RE-SUBMITTAL	01/07/2016
B	NEW HANOVER COUNTY EROSION AND SEDIMENT CONTROL RE-SUBMITTAL	01/04/2015
A	CITY OF WILMINGTON TECHNICAL REVIEW COMMITTEE SUBMITTAL	11/10/2015

REVISIONS

SEAL

FINAL DRAWING FOR REVIEW PURPOSES ONLY

SEAL

McKIM&CREED
243 North Front Street
Wilmington, North Carolina 28401
Phone: (910)343-1048, Fax: (910)251-8282
License: F-1222
www.mckimcreed.com

NORTH AMERICA SEKISUI HOUSE, LLC

RIVERLIGHTS™ by Newland COMMUNITIES

RIVERLIGHTS MARINA VILLAGE
PHASE 1B

GENERAL NOTES

DATE: 10NOV15
MCE PROJ. # 2735-0124
DRAWN ALM
DESIGNED NJL
CHECKED KCBE
PROJ. MGR. NJL

SCALE
HORIZONTAL: N/A
VERTICAL: N/A

M&C FILE NUMBER G-003
DRAWING NUMBER 3

STATUS: FINAL DESIGN
NOT FOR CONSTRUCTION
REVISION C

S:\2735\0124 Marina Village\80-Drawings\Phase 1B\G-003.dwg, 1/14/2016 10:26:56 AM, AMendenhall

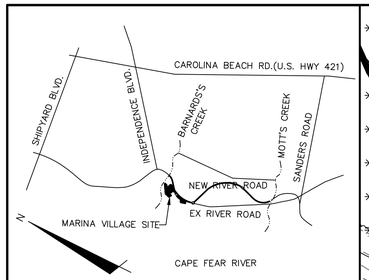

VICINITY MAP

NOT TO SCALE

SITE DATA TABLE	MARINA VILLAGE – PHASE 2	
GENERAL INFORMATION		
APPLICANT NAME	NNP IV– CAPE FEAR RIVER, LLC	
SITE ADDRESS	4410 RIVER ROAD	
PROPERTY OWNER	NNP IV– CAPE FEAR RIVER, LLC	
DEVELOPER	NNP IV– CAPE FEAR RIVER LLC	
MAP SCALE	1"=60'	
PROPERTY BOUNDARY		
TAX PARCEL IDENTIFICATION NUMBER	R07000–006–009–000	
ZONING DISTRICT	MX	
TOTAL ACREAGE WITHIN THE RIVER ROAD BOUNDARY	1,329.41 ACRES (57,909,099.6 SF)	
TOTAL ACREAGE WITHIN THE MARINA VILLAGE BOUNDARY	38.67 ACRES (1,684,343 SF)	
ADJACENT PROPERTY		
ADJACENT PROPERTY	PROPERTY	ZONING
	WATERMARK MARINA	LI
	DUKE PROGRESS ENERGY	I–2
VICINITY		
VICINITY MAP	SEE CX–101	
TOPOGRAPHY AND DRAINAGE		
2–FT TOPOGRAPHY MINIMUM INTERVAL	SEE CX–101	
DATE OF TOPOGRAPHY DATA	5/5/2015	
100–YR FLOODPLAIN LINE	SEE CX–101	
LOCATION OF NATURAL WATER FEATURES	LOCATION	CLASSIFICATION
DITCHES	SEE CX–101	NON–JURISDICTIONAL
STREAMS	N/A	
CREEKS	N/A	
FLOOD PRONE AREAS	SEE CX–101	
AREAS OF NATURALLY CONCENTRATED SURFACE DRAINAGE	N/A	
SOIL		
SOIL TYPE(S) AND BOUNDARIES	SEE CX–101	
NORTH CAROLINA COASTAL AREA MANAGEMENT AD INFORMATION		
CAMA AREA OF ENVIRONMENTAL CONCERN	SEE CX–101	
SETBACKS	75 FT	
CAMA LAND USE CLASSIFICATION(S)	TRANSITION/CONSERVATION	
CONSERVATION RESOURCE REGULATIONS		
PRESENCE OF CONSERVATION RESOURCE	PRESENCE; SEE CX–101	
SETBACKS	TABLE; SEE CX–101	
VEGETATED BUFFER	35' BUFFER, SEE CX–101	
HISTORIC AND ARCHEOLOGICAL SITES		
LOCAL, STATE,OR FEDERALLY RECOGNIZED HISTORIC STRUCTURE(S) OR ARCHEOLOGICAL RESOURCES	NOT PRESENT	
LOCATION	N/A	
CEMETERIES		
CEMETERIES, BURIAL SITES, OR BURIAL GROUNDS?	NOT PRESENT	
FORESTED AREAS		
BOUNDARIES OF FORESTED AREAS	SEE CX–101	
FOREST AREA	19.17 ACRES (835,039 SF)	
HABITAT	FORESTED WETLAND/TIDAL MARSH	
DOMINANT SPECIES	OAK, PINE	
WETLANDS		
404/SECTION 10 WETLAND LOCATION	PRESENCE; SEE CX–101	
METHOD OF DETERMINATION	FIELD SURVEY	
IMPACTED WETLANDS	N/A	
ENDANGERED SPECIES OR HABITAT		
ENDANGERED SPECIES OR HABITAT IN PROJECT AREA	NOT PRESENT	
AUTOMOBILE, BICYCLE, PEDESTRIAN, OR TRANSIT FACILITIES		
EXISTING OR PROPOSED THOROUGHFARES, BIKE ROUTES, PEDESTRIAN SIDEWALKS OR TRAILS, AND TRANSIT FACILITIES	NOT PRESENT	

404 WETLAND (BRACKISH)

COASTAL MARSH LINE

EXISTING NON–JURISDICTIONAL DITCH

SOIL BOUNDARY (TYP.)

PROPOSED RIVER ROAD (130' PUBLIC R/W)

50.0' DUKE PROGRESS ACCESS EASEMENT

170.0' DUKE PROGRESS TRANSMISSION EASEMENT

40.0' DUKE PROGRESS ACCESS EASEMENT

50.0' PIEDMONT NATURAL GAS EASEMENT

TREE LINE (TYP.)

NNP IV CAPE FEAR RIVER LLC
4410 RIVER ROAD
PARCEL ID: R07000–006–009–000
ZONING: MX MIXED USE
LAND USE: 108–FORESTRY & RELATED

Kr Pm Ly

25' 35' 100' 75'

35' VEGETATED BUFFER

CAMA AREA OF ENVIRONMENTAL CONCERN (AEC)

CITY OF WILMINGTON CONSERVATION RESOURCE LINE PER LDC ARTICLE 6, DIVISION III, SECTION 18–341

100–YR FLOODPLAIN (EFFECTIVE)(AE9)

MEAN HIGH WATER (APPROX. EL. 2)

CAMA CLASSIFICATION BOUNDARY

100–YR FLOODPLAIN (PRELIMINARY)(AE9)

COASTAL MARSH LINE

CAPE FEAR RIVER

LEGEND

△ RBC	=	REBAR & CAP
	=	POWER POLE
Ⓢ	=	SANITARY SEWER MANHOLE
	=	WETLAND
OHE OHE	=	OVERHEAD ELECTRIC LINE
COD COD	=	CITY OF WILMINGTON CONSERVATION RESOURCE SETBACK LINE
SS SS	=	SANITARY SEWER MAIN
MHW MHW	=	MEAN HIGH WATER
AEC AEC AEC	=	AREA OF ENVIRONMENTAL CONCERN
	=	100–YEAR FLOODPLAIN (PRELIMINARY)
	=	100–YEAR FLOODPLAIN (EFFECTIVE)
	=	COASTAL MARSH LINE
	=	35' CONSERVATION RESOURCE VEGETATED BUFFER
TPF	=	TREE PROTECTION FENCE
LOD LOD	=	LIMITS OF DISTURBANCE
SF	=	SILT FENCE
>TDD >TDD	=	TEMPORARY DIVERSION DITCH
	=	CAMA CLASSIFCATION BOUNDARY

CONSERVATION RESOURCE SETBACK TABLE

CONSERVATION RESOURCE	RES	COMM
POCOSIN	25'	50'
SAVANNAH	25'	50'
BRACKISH/SALT MARSH	75'	100'

REFERENCE: LDC 18–341 (d) 5h

TREE LEGEND

	=	CEDAR
	=	GUM
	=	HOLLY
	=	OAK
	=	MAPLE
	=	PINE

GENERAL NOTES:

1. FLOODPLAIN INFORMATION WAS OBTAINED FROM NC FLOODPLAIN MAPPING FLOOD RISK INFORMATION SYSTEM PROGRAM. RIVERLIGHTS IS LOCATED WITHIN FIRM MAP 3720312400K, PANEL 3124 AS REVISED JUNE 02, 2006.
2. ITEMS DESIGNATED AS "PROPOSED" ARE PART OF THE RIVER ROAD REALIGNMENT PROJECT THAT IS CURRENTLY UNDER CONSTRUCTION. RIVER ROAD CONSTRUCTION TO BE COMPLETE SPRING 2016.
3. WETLANDS SHOWN IN THIS PORTION OF RIVERLIGHTS WERE DESCRIBED AS BRACKISH/SALT MARSH AND POCOSIN WETLANDS AND CONSERVATION RESOURCE SETBACK LINES WERE GENERATED AS 100' FOR COMMERCIAL, 75' FOR RESIDENTIAL, AND 25', RESPECTIVELY, MINIMUM OUTSIDE OF THE RESOURCE.
4. FINISHED FLOOR ELEVATIONS OFF ALL INHABITABLE STRUCTURES WILL BE MIN. 2–FEET ABOVE BASE FLOOD ELEVATION

N

60' 0 60' 120'

SCALE: 1"=60' (Horiz.)

REV.NO.	DESCRIPTIONS	DATE
	REVISIONS	
C	CITY OF WILMINGTON TECHNICAL REVIEW COMMITTEE RE–SUBMITTAL	01/07/2016
B	NEW HANOVER COUNTY EROSION AND SEDIMENT CONTROL RE–SUBMITTAL	01/04/2015
A	CITY OF WILMINGTON TECHNICAL REVIEW COMMITTEE SUBMITTAL	11/10/2015

SEAL

FINAL DRAWING FOR REVIEW PURPOSES ONLY

SEAL

McKIM&CREED
243 North Front Street
Wilmington, North Carolina 28401
Phone: (910)343–1048, Fax: (910)251–8282
License: F–1222
www.mckimcreed.com

NORTH AMERICA SEKISUI HOUSE, LLC

RIVERLIGHTS™ by Newland COMMUNITIES

RIVERLIGHTS MARINA VILLAGE PHASE 1B

EXISTING CONDITIONS SITE INVENTORY MAP

DATE:	10NOV15
MCE PROJ. #	2735–0124
DRAWN	ALM
DESIGNED	NJL
CHECKED	KCBE
PROJ. MGR.	NJL

SCALE: HORIZONTAL: 1"=60' VERTICAL: N/A

M&C FILE NUMBER: CX–101
DRAWING NUMBER: 4

STATUS: FINAL DESIGN
NOT FOR CONSTRUCTION
REVISION: C

S:\2735\0324 Marina Village\9D-Drawings\Phase 1B\CX-102.dwg, 1/14/2016 10:29:28 AM, AMenidenhall

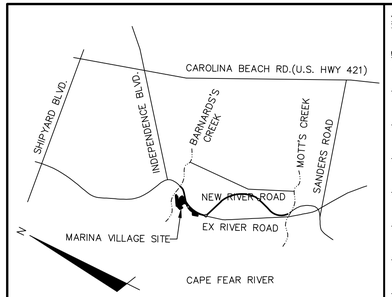

VICINITY MAP

NOT TO SCALE

404 WETLAND (POCOSIN)

404 WETLAND (BRACKISH)

PROJECT BOUNDARY

PROPOSED RIVER ROAD (80' PUBLIC R/W)

50.0' PIEDMONT NATURAL GAS EASEMENT

40.0' DUKE PROGRESS ACCESS EASEMENT

170.0' DUKE PROGRESS TRANSMISSION EASEMENT

50.0' DUKE PROGRESS ACCESS EASEMENT

TREE LINE (TYP.)

35' VEGETATED BUFFER

CAMA AREA OF ENVIRONMENTAL CONCERN (AEC)

CITY OF WILMINGTON CONSERVATION RESOURCE LINE PER LDC ARTICLE 6, DIVISION III, SECTION 18-341

100-YR FLOODPLAIN (EFFECTIVE)(AE9)

CAMA CLASSIFICATION BOUNDARY

MEAN HIGH WATER (APPROX. EL. 2)

100-YR FLOODPLAIN (PRELIMINARY)(AE9)

COASTAL MARSH LINE

CAPE FEAR RIVER

SCALE: 1"=60' (Horiz.)

LEGEND

RBC	=	REBAR & CAP
	=	POWER POLE
	=	SANITARY SEWER MANHOLE
	=	WETLAND
OHE OHE	=	OVERHEAD ELECTRIC LINE
COD COD	=	CITY OF WILMINGTON CONSERVATION RESOURCE SETBACK LINE
SS SS	=	SANITARY SEWER MAIN
MHW MHW	=	MEAN HIGH WATER
AEC AEC AEC	=	AREA OF ENVIRONMENTAL CONCERN
	=	100-YEAR FLOODPLAIN (PRELIMINARY)
	=	100-YEAR FLOODPLAIN (EFFECTIVE)
	=	COASTAL MARSH LINE
	=	35' CONSERVATION RESOURCE VEGETATED BUFFER
TPF	=	TREE PROTECTION FENCE
LOD LOD	=	LIMITS OF DISTURBANCE
SF	=	SILT FENCE
>TDD >TDD	=	TEMPORARY DIVERSION DITCH
	=	CAMA CLASSIFCATION BOUNDARY

TREE LEGEND

	=	CEDAR
	=	GUM
	=	HOLLY
	=	OAK
	=	MAPLE
	=	PINE
X	=	TREE TO BE REMOVED

CONSERVATION RESOURCE SETBACK TABLE		
CONSERVATION RESOURCE	RES	COMM
POCOSIN	25'	50'
SAVANNAH	25'	50'
BRACKISH/SALT MARSH	75'	100'

REFERENCE: LDC 18-341 (d) 5h

REV.NO.	DESCRIPTIONS	DATE
	REVISIONS	
C	CITY OF WILMINGTON TECHNICAL REVIEW COMMITTEE RE-SUBMITTAL	01/07/2016
B	NEW HANOVER COUNTY EROSION AND SEDIMENT CONTROL RE-SUBMITTAL	01/04/2015
A	CITY OF WILMINGTON TECHNICAL REVIEW COMMITTEE SUBMITTAL	11/10/2015

FINAL DRAWING FOR REVIEW PURPOSES ONLY

SEAL

SEAL

McKIM&CREED
243 North Front Street
Wilmington, North Carolina 28401
Phone: (910)343-1048, Fax: (910)251-8282
License: F-1222
www.mckimcreed.com

NASH NORTH AMERICA SEKISUI HOUSE, LLC

RIVERLIGHTS by Newland COMMUNITIES

RIVERLIGHTS MARINA VILLAGE PHASE 1B

TREE REMOVAL PLAN

DATE:	10NOV15
MCE PROJ. #	2735-0124
DRAWN	ALM
DESIGNED	NJL
CHECKED	KCBE
PROJ. MGR.	NJL

SCALE: HORIZONTAL: 1"=60' VERTICAL: N/A

M&C FILE NUMBER CX-102 DRAWING NUMBER 5

STATUS: FINAL DESIGN NOT FOR CONSTRUCTION REVISION C

S:\2735\0124 Marina Village\9D-Drawings\Phase 1B\CX-102.dwg, 1/14/2016 10:29:58 AM, AMmidenhall

LIMITS OF DISTURBANCE = 5.08 AC

LAT: 34° 9' 13" N
LONG: 77° 56' 36" W

TREE LEGEND

- = CEDAR
- = GUM
- = HOLLY
- = OAK
- = MAPLE
- = PINE

PHASE 1 CONSTRUCTION SEQUENCE

1. ESTABLISH LIMITS OF DISTURBANCE AS SHOWN.
2. A PRE-CONSTRUCTION CONFERENCE MUST BE HELD 48 HOURS PRIOR TO THE START OF ANY CONSTRUCTION ACTIVITIES. THE EROSION CONTROL INSPECTOR, ENGINEER, AND CONTRACTOR SHALL MEET AT THE NEW HANOVER COUNTY EROSION CONTROL INSPECTOR'S OFFICE.
3. INSTALL TEMPORARY GRAVEL CONSTRUCTION ENTRANCES AS SHOWN. CONTRACTOR SHALL MAINTAIN A SUFFICIENT GRAVEL ENTRANCE UNTIL FINAL SUB-GRADE IS ESTABLISHED. IF DIRT/MUD GETS ON THE STREET, THEN A WASH RACK WILL NEED TO BE INSTALLED.
4. INSTALL TREE PROTECTION FENCING AND SILT FENCING AS NOTED ON PLANS BEFORE COMMENCING ANY LAND DISTURBANCE ACTIVITY. ADDITIONAL TREE PROTECTION FENCING AND SILT FENCE MAY BE REQUIRED.
5. INSTALL TEMPORARY SKIMMER BASINS WITHIN THE LIMITS OF CONSTRUCTION AS SHOWN ON THE PLANS IN ORDER TO TREAT SEDIMENT LADEN WATER. BASINS SHALL BE CONSTRUCTED PRIOR TO CONSTRUCTION OF ANY DIVERSION DITCHES THAT CONVEY WATER TO THE BASINS. CONTRACTOR TO FIELD ADJUST TEMPORARY DIVERSION DITCHES AS REQUIRED TO MAINTAIN THE DIVERSION TO THE BASINS.
6. COMMENCE GRUBBING AND ROUGH GRADING WITHIN THE LIMITS OF CONSTRUCTION.
7. PROVIDE TEMPORARY STABILIZATION AND SEEDING AS NECESSARY TO PREVENT EROSION. REFER TO SHEET CE-501 FOR GROUND STABILIZATION CRITERIA AND SEEDING SCHEDULE.

NOTE:

- WHERE SILT FENCE IS REQUIRED IN THE SAME PLACE AS TREE PROTECTION FENCING, ORANGE SILT FENCE AND SIGNAGE FOR TREE PROTECTION MAY BE USED INSTEAD OF DUPLICATE FENCING. SIGNAGE MUST MEET CITY OF WILMINGTON REQUIREMENTS FOR TREE PROTECTION DURING CONSTRUCTION (SD 15-09).
- CONSTRUCTION AND GRADING WILL NOT DISTURB THE WETLAND/CONSERVATION RESOURCE.

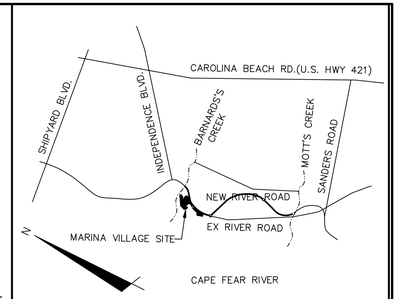

VICINITY MAP

NOT TO SCALE

361 LF TEMPORARY SILT FENCE (SF 12) DA: 0.15 AC SEE DETAIL; SHEET CE-501

TREE PROTECTION (TYP.) SEE DETAIL: SHEET CE-501

372 LF TEMPORARY SILT FENCE (SF 3) DA: 0.15 AC SEE DETAIL; SHEET CE-501

107 LF TEMPORARY SILT FENCE (SF 13) DA: 0.04 AC SEE DETAIL; SHEET CE-501

133 LF TEMPORARY SILT FENCE (SF 2) DA: 0.09 AC SEE DETAIL; SHEET CE-501

TEMP. DIVERSION DITCH (TDD-2) SEE DETAIL; SHEET CE-502

TSB-1
DRAINAGE AREA=3.47 AC
RATIONAL "C"= 0.30
DESIGN INTENSITY= 7.23 IN/HR
10-YEAR PEAK FLOW= 7.53 CFS

DA #1

ROCK CHECK DAM (TYP.) SEE DETAIL: SHEET CE-502

TEMP. DIVERSION DITCH (TDD-1) SEE DETAIL; SHEET CE-502

TEMPORARY SEDIMENT BASIN DRAINAGE AREA

141 LF TEMPORARY SILT FENCE (SF 5) DA: 0.10 AC SEE DETAIL; SHEET CE-501

ROCK CHECK DAM (TYP.) SEE DETAIL: SHEET CE-502

TEMP. PERIMETER DIKE INSTALLED DURING PHASE 1 CONSTRUCTION

71 LF TEMPORARY SILT FENCE (SF 6) DA: 0.03 AC SEE DETAIL; SHEET CE-501

TEMP. CONSTRUCTION ENTRANCE SEE DETAIL: SHEET CE-501

137 LF TEMPORARY SILT FENCE (SF 1) DA: 0.06 AC SEE DETAIL; SHEET CE-501

PROPOSED RIVER ROAD
-UNDER CONSTRUCTION-
(130' PUBLIC R/W)

MARINA VILLAGE PHASE 1 LOD (TYP.)

558 LF TEMPORARY SILT FENCE (SF 7) DA: 0.50 AC SEE DETAIL; SHEET CE-501

DUKE PROGRESS ACCESS EASEMENT

DUKE PROGRESS TRANSMISSION EASEMENT

PIEDMONT NATURAL GAS EASEMENT

209 LF TEMPORARY SILT FENCE (SF 8) DA: 0.13 AC SEE DETAIL; SHEET CE-501

304 LF TEMPORARY SILT FENCE (SF 11) DA: 0.52 AC SEE DETAIL; SHEET CE-501

TEMP. CONSTRUCTION ENTRANCE SEE DETAIL: SHEET CE-501

263 LF TEMPORARY SILT FENCE (SF 9) DA: 0.33 AC SEE DETAIL; SHEET CE-501

35' VEGETATED BUFFER

CAMA AREA OF ENVIRONMENTAL CONCERN (AEC)

100-YR FLOODPLAIN (PRELIMINARY)(AE9)

100-YR FLOODPLAIN (EFFECTIVE)(AE9)

CITY OF WILMINGTON CONSERVATION OVERLAY DISTRICT (COD)

MEAN HIGH WATER (APPROX. EL. 2)

TREE LINE

COASTAL MARSH LINE

CAPE FEAR RIVER

50' 0 50' 100'
SCALE: 1"=50' (Horiz.)

LEGEND

- RBC = REBAR & CAP
- = POWER POLE
- S = SANITARY SEWER MANHOLE
- = WETLAND
- OHE OHE = OVERHEAD ELECTRIC LINE
- COD COD = CITY OF WILMINGTON CONSERVATION RESOURCE SETBACK LINE
- SS SS = SANITARY SEWER MAIN
- MHW MHW = MEAN HIGH WATER
- AEC AEC AEC = AREA OF ENVIRONMENTAL CONCERN
- = 100-YEAR FLOODPLAIN (PRELIMINARY)
- = 100-YEAR FLOODPLAIN (EFFECTIVE)
- = COASTAL MARSH LINE
- = 35' CONSERVATION RESOURCE VEGETATED BUFFER
- TPF = TREE PROTECTION FENCE
- LOD LOD = LIMITS OF DISTURBANCE
- SF = SILT FENCE
- >TDD >TDD = TEMPORARY DIVERSION DITCH

REV.NO.	DESCRIPTIONS REVISIONS	DATE
C	CITY OF WILMINGTON TECHNICAL REVIEW COMMITTEE RE-SUBMITTAL	01/07/2016
B	NEW HANOVER COUNTY EROSION AND SEDIMENT CONTROL RE-SUBMITTAL	01/04/2015
A	CITY OF WILMINGTON TECHNICAL REVIEW COMMITTEE SUBMITTAL	11/10/2015

FINAL DRAWING FOR REVIEW PURPOSES ONLY

SEAL

SEAL

McKIM & CREED
243 North Front Street
Wilmington, North Carolina 28401
Phone: (910)343-1048, Fax: (910)251-8282
License: F-1222
www.mckimcreed.com

NORTH AMERICA SEKISUI HOUSE, LLC

RIVERLIGHTS™ by Newland COMMUNITIES

RIVERLIGHTS MARINA VILLAGE PHASE 1B

PHASE 1 SEDIMENT & EROSION CONTROL PLAN

DATE:	10NOV15
MCE PROJ. #	2735-0124
DRAWN	ALM
DESIGNED	NJL
CHECKED	KCBE
PROJ. MGR.	NJL

SCALE: HORIZONTAL: 1"=50' VERTICAL: N/A

MAC FILE NUMBER: CE-101
DRAWING NUMBER: 6

STATUS: FINAL DESIGN
NOT FOR CONSTRUCTION

REVISION: C

S:\2735\0124 Marina Village\80-Drawings\Phase 1B\CE-101.dwg, 1/14/2016 11:24:21 AM, AMendenhall

CONSTRUCTION SEQUENCE:

PHASE 2 CONSTRUCTION SEQUENCE

1. BEGIN PHASE 2 SEDIMENT AND EROSION CONTROL UPON COMPLETION OF CLEARING AND GRUBBING OPERATIONS, ROUGH GRADING OF THE SITE AND INSTALLATION OF THE STORM WATER COLLECTION SYSTEM.
2. MAINTAIN MEASURES FROM PHASE 1 AS SHOWN IN THIS PHASE 2 SEDIMENT AND EROSION CONTROL DRAWING.
3. REMOVE MEASURES FROM PHASE 1 AS SHOWN. THIS INCLUDES TEMPORARY SEDIMENT BASINS AND TEMPORARY DIVERSIONS. STABILIZE THESE AREAS ACCORDING TO THE STABILIZATION MEASURES REQUIRED HEREIN.
4. INSTALL INLET PROTECTION AS SHOWN IN THE PHASE 2 PLAN AND CONSTRUCTION DETAILS.
5. COMPLETE CONSTRUCTION OF THE PROPOSED IMPROVEMENTS.
6. UPON COMPLETION OF CONSTRUCTION, ESTABLISH PERMANENT GROUND COVER AND OVERALL SITE STABILIZATION.
7. REMOVE THE SEDIMENT AND EROSION CONTROL MEASURES.

LIMITS OF DISTURBANCE = 5.08 AC

LAT: 34° 9' 13" N
LONG: 77° 56' 36" W

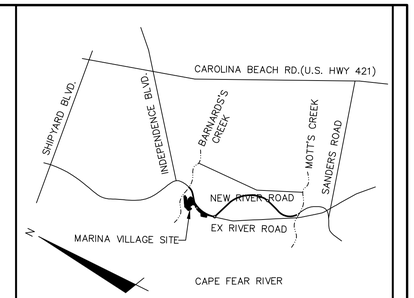

VICINITY MAP

NOT TO SCALE

361 LF TEMPORARY SILT FENCE (SF 12) DA: 0.15 AC SEE DETAIL; SHEET CE-501

226 LF TEMPORARY SILT FENCE (SF 4) DA: 0.11 AC SEE DETAIL; SHEET CE-501

372 LF TEMPORARY SILT FENCE (SF 3) DA: 0.15 AC SEE DETAIL; SHEET CE-501

TREE PROTECTION (TYP.) SEE DETAIL; SHEET CE-501

107 LF TEMPORARY SILT FENCE (SF 13) DA: 0.04 AC SEE DETAIL; SHEET CE-501

135 LF TEMPORARY SILT FENCE (SF 2) DA: 0.09 AC SEE DETAIL; SHEET CE-501

133 LF TEMPORARY SILT FENCE (SF 10) DA: 0.04 AC SEE DETAIL; SHEET CE-501

INLET PROTECTION (TYP.)

LIMITS OF DISTURBANCE (TYP.)

137 LF TEMPORARY SILT FENCE (SF 1) DA: 0.06 AC SEE DETAIL; SHEET CE-501

141 LF TEMPORARY SILT FENCE (SF 5) DA: 0.10 AC SEE DETAIL; SHEET CE-501

RIPRAP OUTLET PROTECTION, d50=4" SEE SHEET CG-503 FOR DETAILS

404 WETLAND

PHASE 1 INFILTRATION BASIN 1 SEE SHEET CN-501 FOR DETAILS

PHASE 1 INFILTRATION BASIN 2 SEE SHEET CN-501 FOR DETAILS

PHASE 1 INFILTRATION BASIN 2

REMOVE SILT FENCE SECTION FOR PARKING LOT CONSTRUCTION

PROPOSED RIVER ROAD
-UNDER CONSTRUCTION-
(130' PUBLIC R/W)

558 LF TEMPORARY SILT FENCE (SF 7) DA: 0.50 AC SEE DETAIL; SHEET CE-501

DUKE PROGRESS ACCESS EASEMENT

DUKE PROGRESS TRANSMISSION EASEMENT

DUKE PROGRESS ACCESS EASEMENT

PIEDMONT NATURAL GAS EASEMENT

304 LF TEMPORARY SILT FENCE (SF 11) DA: 0.52 AC SEE DETAIL; SHEET CE-501

PHASE 1 INFILTRATION BASIN 3

263 LF TEMPORARY SILT FENCE (SF 9) DA: 0.33 AC SEE DETAIL; SHEET CE-501

50.0'
170.0'
40.0'
50.0'
25.0'
35.0'
100.0'
75.0'

35' VEGETATED BUFFER

CAMA AREA OF ENVIRONMENTAL CONCERN (AEC)

100-YR FLOODPLAIN (PRELIMINARY)(AE9)

100-YR FLOODPLAIN (EFFECTIVE)(AE9)

CITY OF WILMINGTON CONSERVATION OVERLAY DISTRICT (COD)

MEAN HIGH WATER (APPROX. EL. 2)

TREE LINE

COASTAL MARSH LINE

Cape Fear River

N

50' 0 50' 100'

SCALE: 1"=50' (Horiz.)

LEGEND

RBC	=	REBAR & CAP
	=	POWER POLE
	=	SANITARY SEWER MANHOLE
	=	WETLAND
OHE OHE	=	OVERHEAD ELECTRIC LINE
COD COD	=	CITY OF WILMINGTON CONSERVATION RESOURCE SETBACK LINE
SS SS	=	SANITARY SEWER MAIN
MHW MHW	=	MEAN HIGH WATER
AEC AEC AEC	=	AREA OF ENVIRONMENTAL CONCERN
	=	100-YEAR FLOODPLAIN (PRELIMINARY)
	=	100-YEAR FLOODPLAIN (EFFECTIVE)
	=	COASTAL MARSH LINE
	=	35' CONSERVATION RESOURCE VEGETATED BUFFER
TPF	=	TREE PROTECTION FENCE
LOD LOD	=	LIMITS OF DISTURBANCE
SF	=	SILT FENCE
>TDD >TDD	=	TEMPORARY DIVERSION DITCH

NOTE:

- CONSTRUCTION AND GRADING WILL NOT DISTURB THE WETLAND/CONSERVATION RESOURCE.

REV.NO.	DESCRIPTIONS REVISIONS	DATE
C	CITY OF WILMINGTON TECHNICAL REVIEW COMMITTEE RE-SUBMITTAL	01/07/2016
B	NEW HANOVER COUNTY EROSION AND SEDIMENT CONTROL RE-SUBMITTAL	01/04/2015
A	CITY OF WILMINGTON TECHNICAL REVIEW COMMITTEE SUBMITTAL	11/10/2015

SEAL

FINAL DRAWING FOR REVIEW PURPOSES ONLY

SEAL

McKIM & CREED
243 North Front Street
Wilmington, North Carolina 28401
Phone: (910)343-1048, Fax: (910)251-8282
License: F-1222
www.mckimcreed.com

NASH
NORTH AMERICA SEKISUI HOUSE, LLC

RIVERLIGHTS™
by Newland COMMUNITIES

RIVERLIGHTS MARINA VILLAGE PHASE 1B

PHASE 2 SEDIMENT & EROSION CONTROL PLAN

DATE:	10NOV15
MCE PROJ. #	2735-0124
DRAWN	ALM
DESIGNED	NJL
CHECKED	KCBE
PROJ. MGR.	NJL

SCALE
HORIZONTAL: 1"=50'
VERTICAL: N/A

M&C FILE NUMBER CE-102
DRAWING NUMBER 7

STATUS: FINAL DESIGN
NOT FOR CONSTRUCTION
REVISION C

S:\2735\00124 Marina Village\80-Drawings\Phase 1B\CE-102.dwg, 1/14/2016 11:15:54 AM, AMendenhall

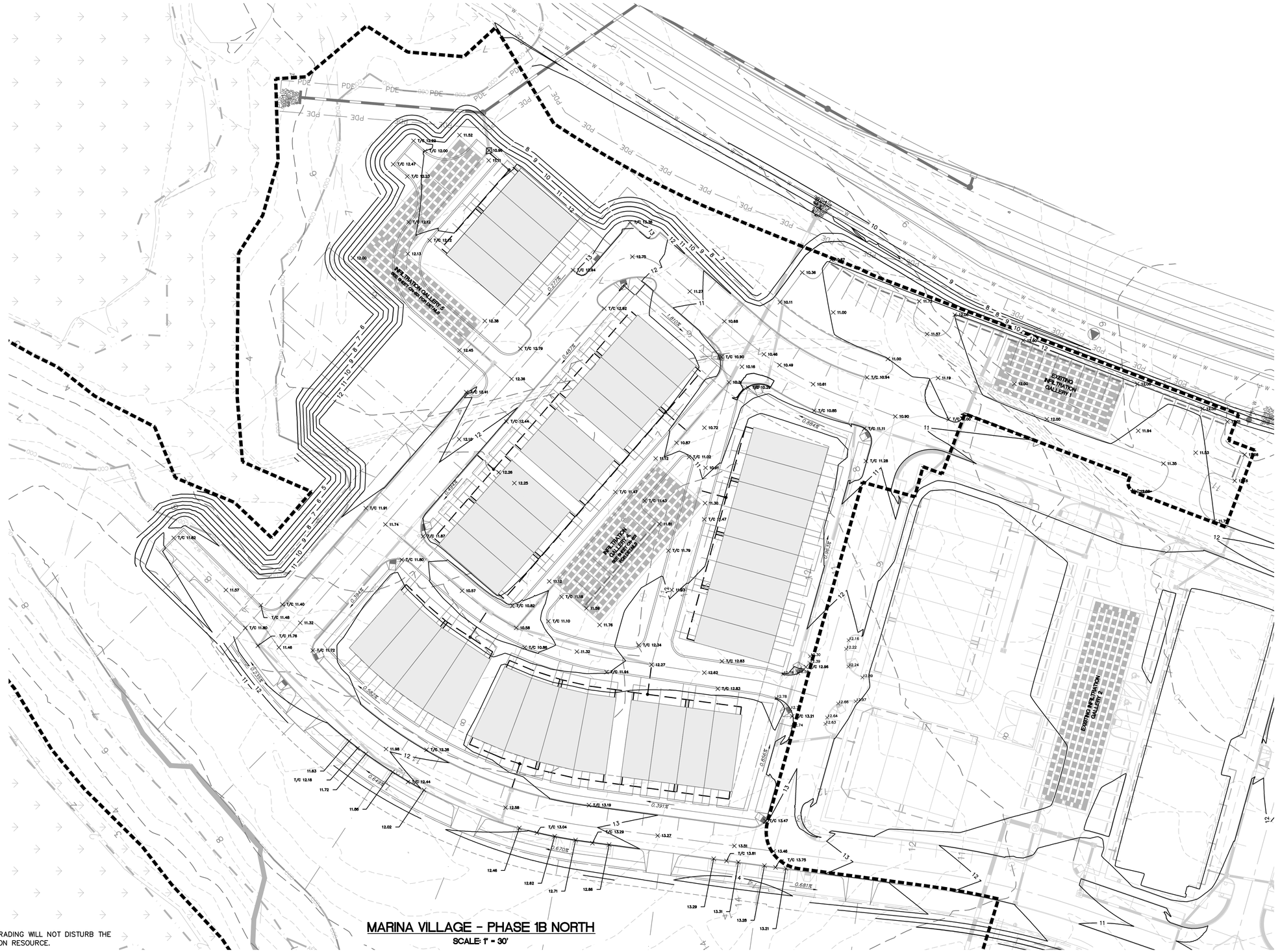

NOTE:

- CONSTRUCTION AND GRADING WILL NOT DISTURB THE WETLAND/CONSERVATION RESOURCE.

MARINA VILLAGE - PHASE 1B NORTH

SCALE: 1" = 30'

N

30' 0 30' 60'

SCALE: 1"=30' (Horiz.)

REV.NO.	DESCRIPTIONS REVISIONS	DATE
C	CITY OF WILMINGTON TECHNICAL REVIEW COMMITTEE RE-SUBMITTAL	01/07/2016
B	NEW HANOVER COUNTY EROSION AND SEDIMENT CONTROL RE-SUBMITTAL	01/04/2015
A	CITY OF WILMINGTON TECHNICAL REVIEW COMMITTEE SUBMITTAL	11/10/2015

SEAL

FINAL DRAWING FOR REVIEW PURPOSES ONLY

SEAL

McKIM&CREED
243 North Front Street
Wilmington, North Carolina 28401
Phone: (910)343-1048, Fax: (910)251-8282
License: F-1222
www.mckimcreed.com

NASH
NORTH AMERICA SEKISUI HOUSE, LLC

RIVERLIGHTS™ by Newland COMMUNITIES

RIVERLIGHTS MARINA VILLAGE PHASE 1B

GRADING PLAN NORTH

DATE:	10NOV15
MCE PROJ. #	2735-0124
DRAWN	ALM
DESIGNED	NJL
CHECKED	KCBE
PROJ. MGR.	NJL

SCALE
HORIZONTAL: 1"=30'
VERTICAL: N/A

M&C FILE NUMBER CG-101
DRAWING NUMBER 8

STATUS: FINAL DESIGN
NOT FOR CONSTRUCTION
REVISION C

S:\2735\0124 Marina Village\80-Drawings\Phase 1B\CS-103.dwg, 11/4/2016 10:40:05 AM, AAmidenhall

MARINA VILLAGE - PHASE 1B SOUTH

SCALE: 1" = 50'

N

30' 0 30' 60'

SCALE: 1"=30' (Horiz.)

NOTE:

- CONSTRUCTION AND GRADING WILL NOT DISTURB THE WETLAND/CONSERVATION RESOURCE.

REV.NO.	DESCRIPTIONS	DATE
C	CITY OF WILMINGTON TECHNICAL REVIEW COMMITTEE RE-SUBMITTAL	01/07/2016
B	NEW HANOVER COUNTY EROSION AND SEDIMENT CONTROL RE-SUBMITTAL	01/04/2015
A	CITY OF WILMINGTON TECHNICAL REVIEW COMMITTEE SUBMITTAL	11/10/2015

REVISIONS

FINAL DRAWING FOR REVIEW PURPOSES ONLY

SEAL

SEAL

McKIM&CREED
243 North Front Street
Wilmington, North Carolina 28401
Phone: (910)343-1048, Fax: (910)251-8282
License: F-1222
www.mckimcreed.com

NORTH AMERICA SEKISUI HOUSE, LLC

RIVERLIGHTS™ by Newland COMMUNITIES

RIVERLIGHTS MARINA VILLAGE
PHASE 1B

GRADING PLAN SOUTH

DATE:	10NOV15
MCE PROJ. #	2735-0124
DRAWN	ALM
DESIGNED	NJL
CHECKED	KCBE
PROJ. MGR.	NJL

SCALE
HORIZONTAL: 1"=30'
VERTICAL: N/A

M&C FILE NUMBER CG-102
DRAWING NUMBER 9

STATUS: FINAL DESIGN
NOT FOR CONSTRUCTION
REVISION C

S:\2735\0124 Marina Village\90-Drawings\Phase 1B\CG-103.dwg, 1/14/2016 10:40:37 AM, AMtenderhall

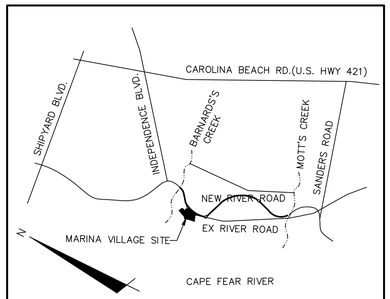

VICINITY MAP

NOT TO SCALE

N

50' 0 50' 100'

SCALE: 1"=50' (Horiz.)

STRUCTURE TABLE – STRM – I4–I5	
STR. NAME	DETAILS
CB–401	RIM = 12.33 INV OUT = 9.85W
CB–402	RIM = 12.39 INV IN =9.74E INV OUT = 9.74NE
CB–403	RIM = 11.80 INV IN =9.30SW INV OUT = 9.30NE
CB–404	RIM = 11.28 INV IN =8.76SW INV OUT = 8.76SE
CB–405	RIM = 11.33 INV IN =8.62NW INV OUT = 8.16SE
CB–405A	RIM = 11.03 INV OUT = 8.02SE
CB–406	RIM = 11.43 INV IN =7.74NW INV OUT = 7.74SE
CB–409	RIM = 11.80 INV IN =7.38NW INV OUT = 7.38SE
CB–410	RIM = 11.82 INV OUT = 7.95NW

STRUCTURE TABLE – STRM – I4–I5	
STR. NAME	DETAILS
CB–417	RIM = 9.81 INV IN =7.46E INV OUT = 7.46N
CB–418	RIM = 10.15 INV IN =7.62E INV OUT = 7.62W
CB–419	RIM = 10.40 INV IN =7.50SE INV OUT = 7.50SW
CB–420	RIM = 10.38 INV OUT = 7.64NW
DI–407	RIM = 10.95 INV OUT = 8.08E INV OUT = 7.04NW
DI–408	RIM = 12.22 INV IN =7.12NW INV OUT = 7.12NE
DI–411	RIM = 11.11 INV IN =7.50NE INV OUT = 7.50SW
DI–412	RIM = 10.48 INV IN =7.23NE INV OUT = 7.23SW
DI–412A	RIM = 10.48 INV IN =7.23NE INV OUT = 7.23SW

STRUCTURE TABLE – STRM – I4–I5	
STR. NAME	DETAILS
DI–413	RIM = 10.58 INV IN =7.16NE INV IN =7.16S INV OUT = 7.16SE
DI–413A	RIM = 10.55 INV IN =7.16NE INV OUT = 7.16SW
DI–414	RIM = 12.27 INV OUT = 7.61N
DI–415	RIM = 11.10 INV OUT = 7.05NW
DI–416	RIM = 10.31 INV IN =7.34NE INV IN =7.34S INV OUT = 7.34NW INV OUT = 7.34SE
DI–421	RIM = 10.76 INV IN =7.14SE INV OUT = 7.14NW
DI–422	RIM = 10.17 INV OUT = 7.74W
DI–423	RIM = 10.91 INV IN =7.07NW INV OUT = 7.07SE
EW–4	RIM = 9.73 INV IN =6.98NW

STRUCTURE TABLE – STRM – I3B	
STR. NAME	DETAILS
DI–501	RIM = 12.11 INV OUT = 8.57N
DI–502	RIM = 10.48 INV IN =8.14N INV OUT = 8.14S
DI–502A	RIM = 10.63 INV IN =8.14N INV OUT = 8.14S
DI–503	RIM = 10.93 INV OUT = 8.54S
EX. CB–318	RIM = 11.45 INV IN =7.76E

NOTE:

- CONSTRUCTION AND GRADING WILL NOT DISTURB THE WETLAND/CONSERVATION RESOURCE.

STORM DRAINAGE PIPE DATA TABLE – STRM – I4–I5							
FROM	TO	LENGTH	SIZE	PIPE TYPE	SLOPE	UPSTREAM INVERT	DOWNSTREAM INVERT
SDMH–1	DI–411	17.50'	15"	RCP	0.51%	7.59'	7.50'
DI–423	I–4A	16.00'	15"	CAP	0.42%	7.07'	7.00'
DI–422	CB–418	21.65'	15"	RCP	0.57%	7.74'	7.62'
DI–421	I–4C	29.63'	18"	CAP	0.49%	7.14'	6.99'
DI–416	EW–4	119.95'	24"	RCP	0.30%	7.34'	6.98'
DI–416	DI–421	41.52'	18"	RCP	0.49%	7.34'	7.14'
DI–415	I–4B	5.99'	15"	CAP	0.99%	7.05'	6.99'
DI–414	DI–413	90.58'	15"	RCP	0.50%	7.61'	7.16'
DI–413A	DI–413	4.01'	15"	RCP	0.00%	7.16'	7.16'
DI–413	DI–423	22.64'	15"	RCP	0.42%	7.16'	7.07'
DI–412A	DI–413A	15.31'	15"	RCP	0.46%	7.23'	7.16'
DI–412	DI–412A	3.97'	15"	RCP	0.00%	7.23'	7.23'
DI–411	DI–412	53.12'	15"	RCP	0.51%	7.50'	7.23'
DI–408	I–5A	24.35'	15"	CAP	0.50%	7.12'	7.00'
DI–407	I–5B	7.13'	18"	CAP	0.50%	7.04'	7.00'
DI–407	EX. SDMH	24.65'	18"	RCP	1.00%	8.08'	7.84'
CB–420	CB–419	29.30'	15"	RCP	0.48%	7.64'	7.50'

STORM DRAINAGE PIPE DATA TABLE – STRM – I4–I5							
FROM	TO	LENGTH	SIZE	PIPE TYPE	SLOPE	UPSTREAM INVERT	DOWNSTREAM INVERT
CB–419	DI–416	31.15'	15"	RCP	0.50%	7.50'	7.34'
CB–418	CB–417	32.17'	15"	RCP	0.49%	7.62'	7.46'
CB–417	DI–416	24.50'	15"	RCP	0.50%	7.46'	7.34'
CB–410	SDMH–1	72.71'	15"	RCP	0.50%	7.95'	7.59'
CB–409	DI–408	51.58'	15"	RCP	0.50%	7.38'	7.12'
CB–406	CB–409	72.73'	15"	RCP	0.50%	7.74'	7.38'
CB–405A	SDMH–1	84.00'	15"	RCP	0.51%	8.02'	7.59'
CB–405	CB–406	84.13'	15"	RCP	0.50%	8.16'	7.74'
CB–404	CB–405	28.46'	15"	CLIV RCP	0.50%	8.76'	8.62'
CB–403	CB–404	106.80'	15"	CLIV RCP	0.50%	9.30'	8.76'
CB–402	CB–403	88.45'	15"	CLIV RCP	0.50%	9.74'	9.30'
CB–401	CB–402	21.30'	15"	CLIV RCP	0.50%	9.85'	9.74'

STORM DRAINAGE PIPE DATA TABLE – STRM – I3B							
FROM	TO	LENGTH	SIZE	PIPE TYPE	SLOPE	UPSTREAM INVERT	DOWNSTREAM INVERT
JB–504	EX. CB–318	40.27'	15"	RCP	0.48%	7.95'	7.76'
DI–503	DI–502A	109.99'	15"	RCP	0.36%	8.54'	8.14'
DI–502A	DI–502	4.01'	15"	RCP	0.00%	8.14'	8.14'
DI–502	JB–504	37.99'	15"	RCP	0.50%	8.14'	7.95'
DI–501	JB–504	124.80'	15"	RCP	0.50%	8.57'	7.95'

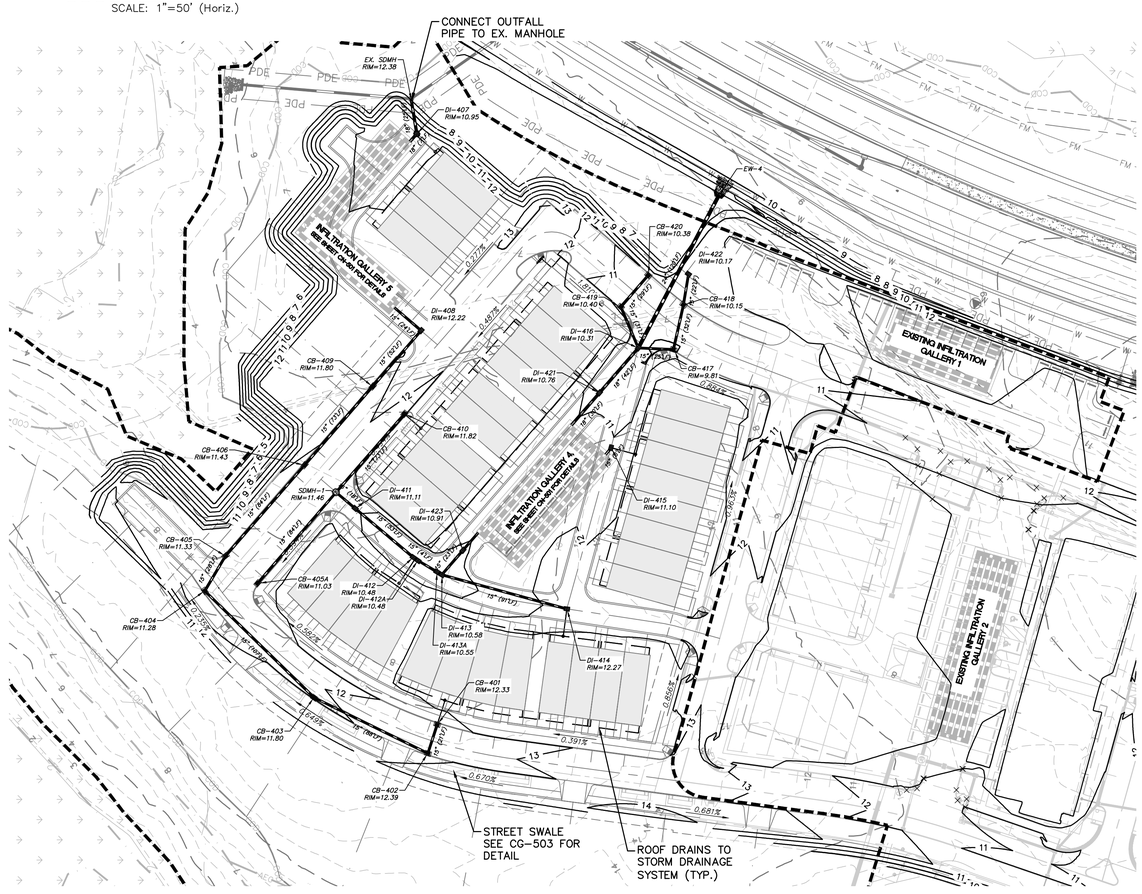

MARINA VILLAGE – PHASE 1B NORTH

SCALE: 1" = 50'

MARINA VILLAGE – PHASE 1B SOUTH

SCALE: 1" = 50'

REV.NO.	DESCRIPTIONS	DATE
C	CITY OF WILMINGTON TECHNICAL REVIEW COMMITTEE RE–SUBMITTAL	01/07/2016
B	NEW HANOVER COUNTY EROSION AND SEDIMENT CONTROL RE–SUBMITTAL	01/04/2015
A	CITY OF WILMINGTON TECHNICAL REVIEW COMMITTEE SUBMITTAL	11/10/2015

REVISIONS

SEAL

FINAL DRAWING FOR REVIEW PURPOSES ONLY

SEAL

McKIM&CREED
243 North Front Street
Wilmington, North Carolina 28401
Phone: (910)343–1048, Fax: (910)251–8282
License: F–1222
www.mckimcreed.com

NASH NORTH AMERICA SEKISUI HOUSE, LLC

RIVERLIGHTS by Newland COMMUNITIES

RIVERLIGHTS MARINA VILLAGE PHASE 1B

STORM DRAINAGE PLAN

DATE:	10NOV15
MCE PROJ. #	2735–0124
DRAWN	ALM
DESIGNED	NJL
CHECKED	KCBE
PROJ. MGR.	NJL

SCALE: HORIZONTAL: 1"=50' VERTICAL: N/A

M&C FILE NUMBER: CG–103

DRAWING NUMBER: 10

STATUS: FINAL DESIGN NOT FOR CONSTRUCTION

REVISION: C

S:\2735\0124 Marina Village\80-Drawings\Phase 1B\CG-103.dwg, 1/14/2016 10:41:27 AM, AMendenhall

PHASE 1B BOUNDARY

PROPOSED RIVER ROAD
-UNDER CONSTRUCTION-
(150' PUBLIC R/W)

IPF

170.0'
DUKE/PROGRESS TRANSMISSION EASEMENT

50.0'
DUKE/PROGRESS TRANSMISSION EASEMENT

50.0'
PIEDMONT NATURAL GAS EASEMENT

40.0'
DUKE/PROGRESS ACCESS EASEMENT

25.0'

PHASE 1B BOUNDARY

PHASE 1
DEVELOPMENT

100-YR FLOODPLAIN
(AE 9 - EFFECTIVE)

100-YR FLOODPLAIN
(AE 9 - PRELIMINARY)

CITY OF WILMINGTON
CONSERVATION RESOURCE
LINE PER LDC ARTICLE 6,
DIVISION III, SECTION 18-341

DOCK TO 112-SLIP OPEN WATER
COMMUNITY BOATING FACILITY
(CAMA PERMIT NO. 92-07)

75.0'

100.0'

35.0'

MEAN HIGH WATER
(APPROX. EL. 2)

COASTAL MARSH
LINE

CAMA AREA OF
ENVIRONMENTAL
CONCERN (AEC)

35' VEGETATED BUFFER PER
LDC ARTICLE 6, DIVISION III,
SECTION 18-341

CRABBING PIER WITH GAZEBO
(CAMA PERMIT NO. 92-07)

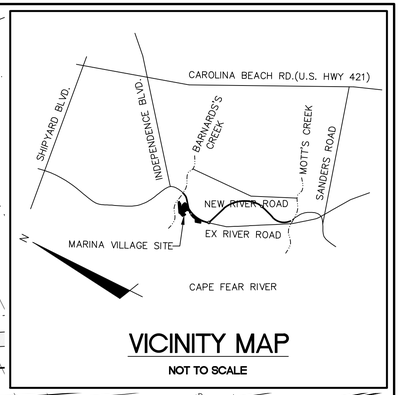

VICINITY MAP

NOT TO SCALE

N

50' 0 50' 100'

SCALE: 1"=50' (Horiz.)

REV.NO.	DESCRIPTIONS	DATE
	REVISIONS	
C	CITY OF WILMINGTON TECHNICAL REVIEW COMMITTEE RE-SUBMITTAL	01/07/2016
B	NEW HANOVER COUNTY EROSION AND SEDIMENT CONTROL RE-SUBMITTAL	01/04/2015
A	CITY OF WILMINGTON TECHNICAL REVIEW COMMITTEE SUBMITTAL	11/10/2015

FINAL DRAWING FOR REVIEW PURPOSES ONLY

SEAL

SEAL

McKIM & CREED
243 North Front Street
Wilmington, North Carolina 28401
Phone: (910)343-1048, Fax: (910)251-8282
License: F-1222
www.mckimcreed.com

NASH
NORTH AMERICA SEKISUI HOUSE, LLC

RIVERLIGHTS by Newland COMMUNITIES

RIVERLIGHTS MARINA VILLAGE PHASE 1B

OVERALL SITE PLAN

DATE:	10NOV15
MCE PROJ. #	2735-0124
DRAWN	ALM
DESIGNED	NJL
CHECKED	KCBE
PROJ. MGR.	NJL

SCALE
HORIZONTAL: 1"=50'
VERTICAL: N/A

M&C FILE NUMBER CS-100
DRAWING NUMBER 11

STATUS: FINAL DESIGN
NOT FOR CONSTRUCTION
REVISION C

S:\2735\0124 Marina Village\90-Drawings\Phase 1B\CS-103.dwg, 1/14/2016 10:44:27 AM, AMendenhall

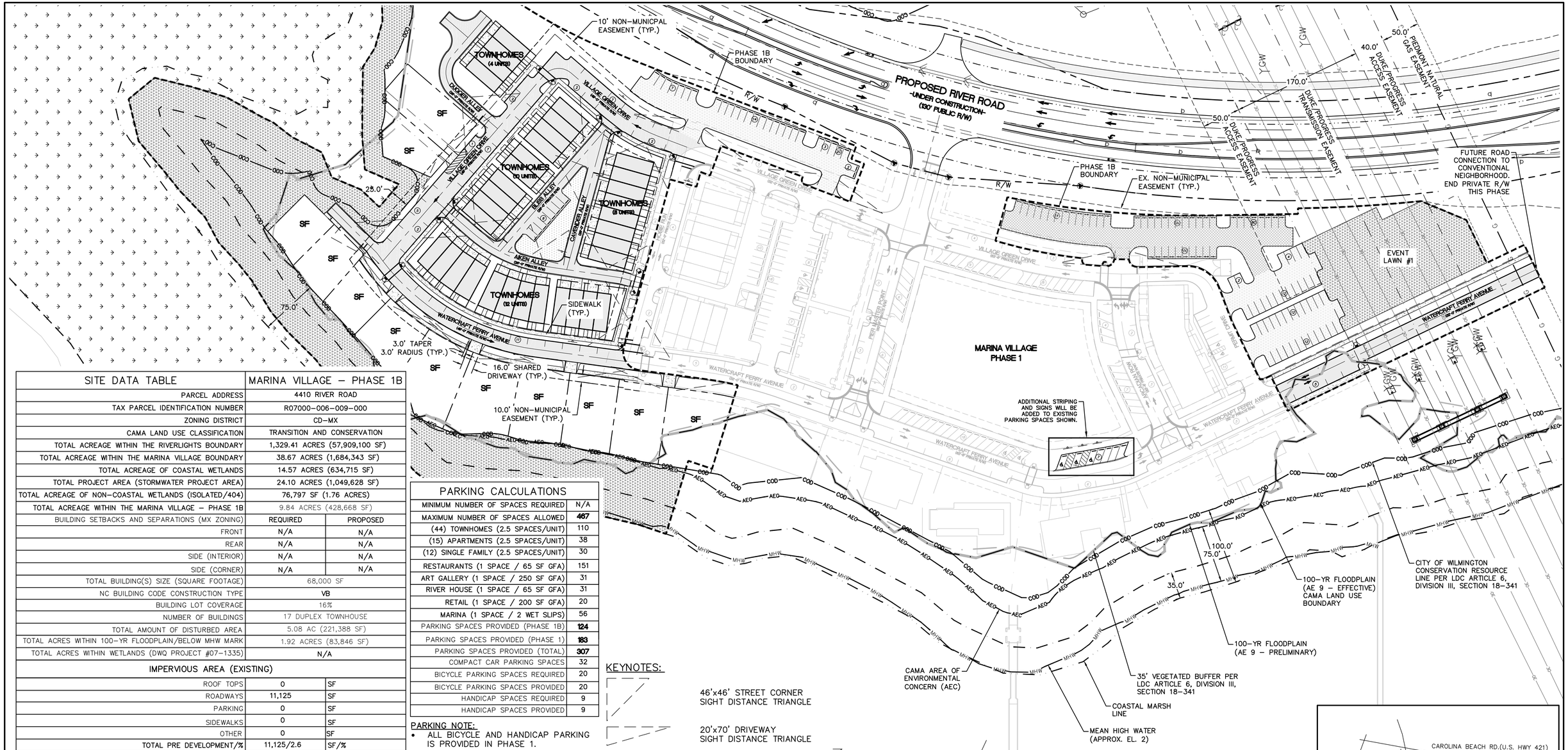

SITE DATA TABLE	MARINA VILLAGE – PHASE 1B	
PARCEL ADDRESS	4410 RIVER ROAD	
TAX PARCEL IDENTIFICATION NUMBER	R07000-006-009-000	
ZONING DISTRICT	CD-MX	
CAMA LAND USE CLASSIFICATION	TRANSITION AND CONSERVATION	
TOTAL ACREAGE WITHIN THE RIVERLIGHTS BOUNDARY	1,329.41 ACRES (57,909,100 SF)	
TOTAL ACREAGE WITHIN THE MARINA VILLAGE BOUNDARY	38.67 ACRES (1,684,343 SF)	
TOTAL ACREAGE OF COASTAL WETLANDS	14.57 ACRES (634,715 SF)	
TOTAL PROJECT AREA (STORMWATER PROJECT AREA)	24.10 ACRES (1,049,628 SF)	
TOTAL ACREAGE OF NON-COASTAL WETLANDS (ISOLATED/404)	76,797 SF (1.76 ACRES)	
TOTAL ACREAGE WITHIN THE MARINA VILLAGE – PHASE 1B	9.84 ACRES (428,668 SF)	
BUILDING SETBACKS AND SEPARATIONS (MX ZONING)	REQUIRED	PROPOSED
FRONT	N/A	N/A
REAR	N/A	N/A
SIDE (INTERIOR)	N/A	N/A
SIDE (CORNER)	N/A	N/A
TOTAL BUILDING(S) SIZE (SQUARE FOOTAGE)	68,000 SF	
NC BUILDING CODE CONSTRUCTION TYPE	VB	
BUILDING LOT COVERAGE	16%	
NUMBER OF BUILDINGS	17 DUPLEX TOWNHOUSE	
TOTAL AMOUNT OF DISTURBED AREA	5.08 AC (221,388 SF)	
TOTAL ACRES WITHIN 100-YR FLOODPLAIN/BELOW MHW MARK	1.92 ACRES (83,846 SF)	
TOTAL ACRES WITHIN WETLANDS (DWQ PROJECT #07-1335)	N/A	
IMPERVIOUS AREA (EXISTING)		
ROOF TOPS	0	SF
ROADWAYS	11,125	SF
PARKING	0	SF
SIDEWALKS	0	SF
OTHER	0	SF
TOTAL PRE DEVELOPMENT/%	11,125/2.6	SF/%
IMPERVIOUS AREA (PROPOSED)		
ROOF TOPS	75,204	SF
ROADWAYS	48,535	SF
PARKING	45,016	SF
PERVIOUS PARKING	0	SF
PERVIOUS PARKING (75% REDUCTION)	0	SF
SIDEWALKS	18,607	SF
PERVIOUS SIDEWALK	0	SF
PERVIOUS SIDEWALK (75% REDUCTION)	0	SF
FUTURE ALLOTMENT	0	SF
OTHER	0	SF
TOTAL S.F. (ONSITE IMPERVIOUS AREA)	187,362	SF
PERCENTAGE (ONSITE IMPERVIOUS AREA/ONSITE AREA)	43.7	%
PERCENTAGE (EXIST. ONSITE IMPERVIOUS AREA/ONSITE AREA)	3.9	%
TOTAL SQUARE FOOTAGE OF IMPERVIOUS SURFACES SHOWN IN THE STREET YARD	0	SF

PARKING CALCULATIONS	
MINIMUM NUMBER OF SPACES REQUIRED	N/A
MAXIMUM NUMBER OF SPACES ALLOWED	**467**
(44) TOWNHOMES (2.5 SPACES/UNIT)	110
(15) APARTMENTS (2.5 SPACES/UNIT)	38
(12) SINGLE FAMILY (2.5 SPACES/UNIT)	30
RESTAURANTS (1 SPACE / 65 SF GFA)	151
ART GALLERY (1 SPACE / 250 SF GFA)	31
RIVER HOUSE (1 SPACE / 65 SF GFA)	31
RETAIL (1 SPACE / 200 SF GFA)	20
MARINA (1 SPACE / 2 WET SLIPS)	56
PARKING SPACES PROVIDED (PHASE 1B)	**124**
PARKING SPACES PROVIDED (PHASE 1)	**183**
PARKING SPACES PROVIDED (TOTAL)	**307**
COMPACT CAR PARKING SPACES	32
BICYCLE PARKING SPACES REQUIRED	20
BICYCLE PARKING SPACES PROVIDED	20
HANDICAP SPACES REQUIRED	9
HANDICAP SPACES PROVIDED	9

PARKING NOTE:
- ALL BICYCLE AND HANDICAP PARKING IS PROVIDED IN PHASE 1.

SURFACE MATERIAL LEGEND

- ASPHALT – STREET SECTION
- ASPHALT – DRIVE AISLE
- GRAVEL – PARKING LOT
- ROOFTOP
- SIDEWALK
- COMMON SPACE
- OPEN SPACE

KEYNOTES:

46'x46' STREET CORNER SIGHT DISTANCE TRIANGLE

20'x70' DRIVEWAY SIGHT DISTANCE TRIANGLE

NOTE:
ALL PROPOSED VEGETATION WITHIN SIGHT TRIANGLES SHALL NOT INTERFERE WITH CLEAR VISUAL SIGHT LINES FROM 30" – 10'

WATER & SEWER DEMAND	
WATER DEMAND	16,560 GDP
SANITARY SEWER DEMAND	16,560 GDP

TOTAL ACREAGE OF MARINA VILLAGE – PHASE 1B WITHIN COD: 2.06 ACRES (89,951 SF)

TOTAL ACREAGE OF MARINA VILLAGE – PHASE 1B ENCROACHMENT INTO THE COD: 0.08 ACRES (3,601 SF)

TOTAL PERCENTAGE OF COD ENCROACHMENT: 0.08 ACRES/2.06 ACRES = 4.00%

60' 0 60' 120'
SCALE: 1"=60' (Horiz.)

COMMON SPACE CALCULATIONS	
TOTAL COMMON SPACE REQUIRED	18.47 ACRES (804,640 SF)*
TOTAL COMMON SPACE PROPOSED	0.08 ACRES (3,634 SF)

OPEN SPACE CALCULATIONS*	
TOTAL OPEN SPACE REQUIRED	46.18 ACRES (2,011,601 SF)*
TOTAL OPEN SPACE PROPOSED	2.78 ACRES (121,308 SF)

*PROPOSED MX-CO CLUSTER FOR ENTIRE RIVER LIGHTS DEVELOPMENT = 184.7 ACRES
OPEN SPACE AND COMMON SPACE ACRES REQUIRED FOR ENTIRE RIVERLIGHTS DEVELOPMENT
@ 25% OPEN SPACE AND 10% COMMON SPACE = 46.18 AC (OPEN) AND 18.47 AC (COMMON)

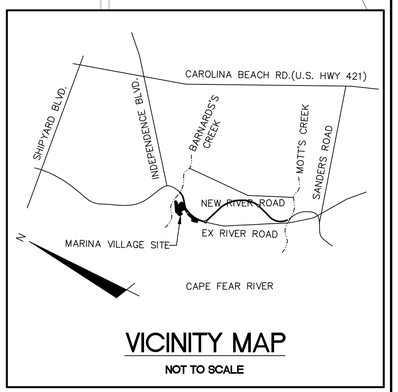

VICINITY MAP

NOT TO SCALE

REV.NO.	DESCRIPTIONS	DATE
	REVISIONS	
C	CITY OF WILMINGTON TECHNICAL REVIEW COMMITTEE RE-SUBMITTAL	01/07/2016
B	NEW HANOVER COUNTY EROSION AND SEDIMENT CONTROL RE-SUBMITTAL	01/04/2015
A	CITY OF WILMINGTON TECHNICAL REVIEW COMMITTEE SUBMITTAL	11/10/2015

SEAL

FINAL DRAWING FOR REVIEW PURPOSES ONLY

SEAL

McKIM&CREED
243 North Front Street
Wilmington, North Carolina 28401
Phone: (910)343-1048, Fax: (910)251-8282
License: F-1222
www.mckimcreed.com

NORTH AMERICA SEKISUI HOUSE, LLC

RIVERLIGHTS™ by Newland COMMUNITIES

RIVERLIGHTS MARINA VILLAGE PHASE 1B

SITE PLAN

DATE:	10NOV15
MCE PROJ. #	2735-0124
DRAWN	ALM
DESIGNED	NJL
CHECKED	KCBE
PROJ. MGR.	NJL

SCALE
HORIZONTAL: 1"=60'
VERTICAL: N/A

M&C FILE NUMBER CS-101
DRAWING NUMBER 12

STATUS: FINAL DESIGN
NOT FOR CONSTRUCTION
REVISION C

S:\2735\0124 Marina Village\90-Drawings\Phase 1B\CS-103.dwg, 1/14/2016 10:44:49 AM, AMendenhall

CITY OF WILMINGTON NOTES:

1. ALL PARKING STALL MARKINGS AND LANE ARROWS WITHIN THE PARKING AREAS SHALL BE WHITE.
2. ALL TRAFFIC CONTROL SIGNS AND MARKINGS OFF THE RIGHT-OF-WAY ARE TO BE MAINTAINED BY THE PROPERTY OWNER IN ACCORDANCE WITH MUTCD STANDARDS.
3. A UTILITY CUT PERMIT IS REQUIRED FOR EACH OPEN CUT OF A CITY STREET. CONTACT 341-5888 FOR MORE DETAILS. IN CERTAIN CASES AN ENTIRE RESURFACING OF THE AREA BEING OPEN CUT MAY BE REQUIRED.
4. A LANDSCAPING PLAN INDICATING THE LOCATION OF REQUIRED STREET TREES SHALL BE SUBMITTED TO THE CITY OF WILMINGTON TRAFFIC ENGINEERING DIVISION AND PARKS AND RECREATION DEPARTMENT FOR REVIEW AND APPROVAL PRIOR TO THE RECORDING OF THE FINAL PLAT.
5. ZERO LOT LINES ARE PERMITTED.
6. BUILDINGS LOCATED ON THE PERIPHERY OF THE MX DISTRICT SHALL BE SET BACK A MINIMUM OF 20 (TWENTY) FEET FROM THE MX DISTRICT BOUNDARY.
7. ZONING AND LAND USE OF ADJACENT PROPERTIES IS AS FOLLOWS:
   - NORTH – FUTURE MX-CD / TRANSITION
   - SOUTH – FUTURE MX-CD / TRANSITION AND CONSERVATION AREA
   - WEST – FUTURE MX-CD / TRANSITION
   - EAST – I-2 / TRANSITION AND CONSERVATION AREA
8. INSTALL REFLECTORS PER CITY AND NCDOT STANDARDS. TRAFFIC ENGINEERING MUST APPROVE OF PAVEMENT MARKING LAYOUT PRIOR TO ACTUAL STRIPING.
9. IT SHALL BE THE RESPONSIBILITY OF THE SUBDIVIDER TO ERECT OFFICIAL STREET NAME SIGNS AT ALL INTERSECTIONS ASSOCIATED WITH THE SUBDIVISION IN ACCORDANCE WITH THE TECHNICAL STANDARDS AND SPECIFICATION MANUAL. THE SUBDIVIDER MAY ACQUIRE AND ERECT OFFICIAL STREET NAME SIGNS OR CHOOSE TO CONTRACT WITH THE CITY TO INSTALL THE STREET SIGNS AND THE SUBDIVIDER SHALL PAY THE COSTS OF SUCH INSTALLATION. CONTACT TRAFFIC ENGINEERING AT 341-7888 TO DISCUSS INSTALLATION OF TRAFFIC AND STREET NAME SIGNS. PROPOSED STREET NAMES MUST BE APPROVED PRIOR TO INSTALLATION OF STREET NAME SIGNS.
10. CONTACT TRAFFIC ENGINEERING AT 341-7888 FORTY-EIGHT HOURS PRIOR TO ANY EXCAVATION IN THE RIGHT OF WAY.
11. IF THESE UNITS ARE SOLD AT ANY POINT, THE BUYER MUST RECEIVE A SUBDIVISION STREET DISCLOSURE STATEMENT.

GENERAL NOTES:

1. FLOODPLAIN INFORMATION WAS OBTAINED FROM NC FLOODPLAIN MAPPING FLOOD RISK INFORMATION SYSTEM PROGRAM. RIVERLIGHTS IS LOCATED WITHIN FIRM MAP 3720312400K, PANEL 3124 AS REVISED JUNE 02, 2006.
2. ITEMS DESIGNATED AS "PROPOSED" ARE PART OF THE RIVER ROAD REALIGNMENT PROJECT THAT IS CURRENTLY UNDER CONSTRUCTION. RIVER ROAD CONSTRUCTION TO BE COMPLETE SPRING 2016.
3. WETLANDS SHOWN IN THIS PORTION OF RIVERLIGHTS WERE DESCRIBED AS BRACKISH/SALT MARSH AND POCOSIN WETLANDS AND CONSERVATION RESOURCE SETBACK LINES WERE GENERATED AS 100' AND 25', RESPECTIVELY, MINIMUM OUTSIDE OF THE RESOURCE.
4. FINISHED FLOOR ELEVATIONS OFF ALL INHABITABLE STRUCTURES WILL BE MIN. 2-FEET ABOVE BASE FLOOD ELEVATION
5. RIVERLIGHTS PHASE 1 MARINA VILLAGE COMMUNITY DOES NOT CONTAIN ANY LOCAL, STATE, OR FEDERALLY RECOGNIZED HISTORIC STRUCTURES OR ARCHEOLOGICAL SITES ON SITE. RIVERLIGHTS WAS ISSUED A NOTICE OF NO FURTHER ACTION LETTER DATED JUNE 2, 2008 FOLLOWING COMPLETION OF AN EA/SEPA DOCUMENT.
6. EXISTING THOROUGHFARES, BIKE ROUTES, PEDESTRIAN SIDEWALKS OR TRAILS AND TRANSITS FACILITIES DO NOT EXIST ON SITE.

(1) (1V) 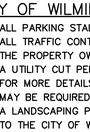

(2)

(3) (4) 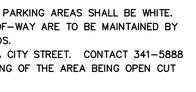

(5)

(6)

(7)

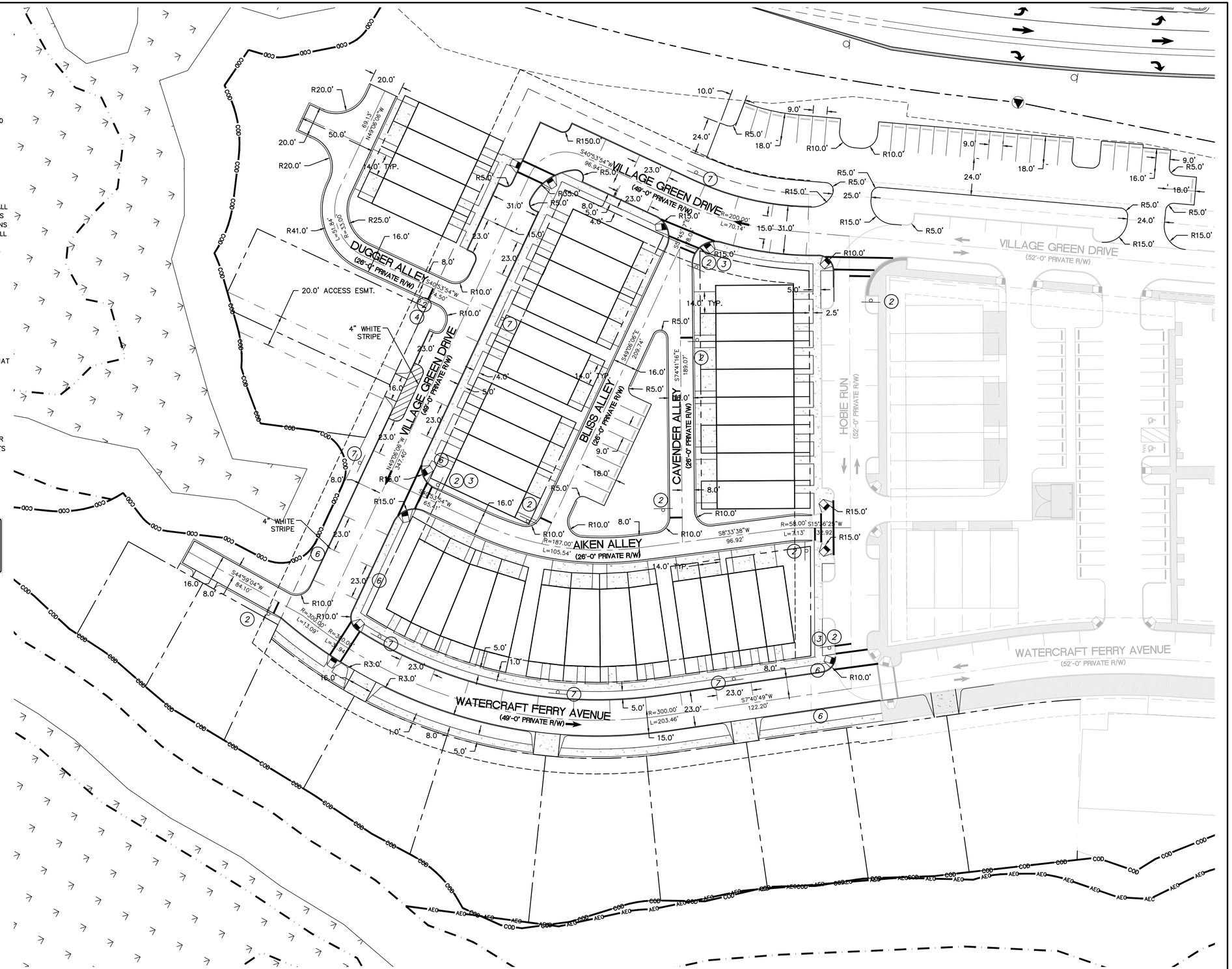

N

30' 0 30' 60'

SCALE: 1"=30' (Horiz.)

REV.NO.	DESCRIPTIONS	DATE
C	CITY OF WILMINGTON TECHNICAL REVIEW COMMITTEE RE-SUBMITTAL	01/07/2016
B	NEW HANOVER COUNTY EROSION AND SEDIMENT CONTROL RE-SUBMITTAL	01/04/2015
A	CITY OF WILMINGTON TECHNICAL REVIEW COMMITTEE SUBMITTAL	11/10/2015

REVISIONS

FINAL DRAWING FOR REVIEW PURPOSES ONLY

SEAL

SEAL

McKIM&CREED
243 North Front Street
Wilmington, North Carolina 28401
Phone: (910)343-1048, Fax: (910)251-8282
License: F-1222
www.mckimcreed.com

NASH NORTH AMERICA SEKISUI HOUSE, LLC

RIVERLIGHTS™ by Newland COMMUNITIES

RIVERLIGHTS MARINA VILLAGE PHASE 1B

SITE PLAN NORTH

DATE:	10NOV15
MCE PROJ. #	2735-0124
DRAWN	ALM
DESIGNED	NJL
CHECKED	KCBE
PROJ. MGR.	NJL

SCALE: HORIZONTAL: 1"=30' VERTICAL: N/A

M&C FILE NUMBER CS-102

DRAWING NUMBER 13

STATUS: FINAL DESIGN NOT FOR CONSTRUCTION

REVISION C

S:\2735\0124 Marina Village\90-Drawings\Phase 1B\CS-103.dwg, 1/14/2016 11:31:19 AM, AMendenhall

REV.NO.	DESCRIPTIONS	DATE
	REVISIONS	
C	CITY OF WILMINGTON TECHNICAL REVIEW COMMITTEE RE-SUBMITTAL	01/07/2016
B	NEW HANOVER COUNTY EROSION AND SEDIMENT CONTROL RE-SUBMITTAL	01/04/2015
A	CITY OF WILMINGTON TECHNICAL REVIEW COMMITTEE SUBMITTAL	11/10/2015

SEAL

FINAL DRAWING FOR REVIEW PURPOSES ONLY

SEAL

McKIM&CREED
243 North Front Street
Wilmington, North Carolina 28401
Phone: (910)343-1048, Fax: (910)251-8282
License: F-1222
www.mckimcreed.com

NASH
NORTH AMERICA SEKISUI HOUSE, LLC

RIVERLIGHTS™
by Newland COMMUNITIES

RIVERLIGHTS MARINA VILLAGE PHASE 1B

SITE PLAN SOUTH

DATE:	10NOV15
MCE PROJ. #	2735-0124
DRAWN	ALM
DESIGNED	NJL
CHECKED	KCBE
PROJ. MGR.	NJL

SCALE
HORIZONTAL: 1"=30'
VERTICAL: N/A

M&C FILE NUMBER CS-103
DRAWING NUMBER 14

STATUS: FINAL DESIGN
NOT FOR CONSTRUCTION
REVISION C

S:\2735\0124 Marina Village\9D-Drawings\Phase 1B\CS-103.dwg, 1/14/2016 10:45:33 AM, AMenderhall

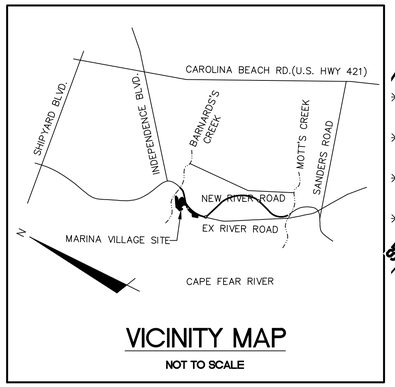

VICINITY MAP

NOT TO SCALE

SEE CU-701
SEE CU703
SEE CU702
FIRE HYDRANT ASSEMBLY (TYP.)
6"x6" MJ TEE 6" DIP
(2) 6" MJ 45° EL.
6" GV
20.0' PUBLIC UTILITY EASEMENT
REMOVE 2" BLOWOFF INSTALL 8"x6" RED.
MH #MV-25 8" PVC INV OUT = 8.94' RIM = 12.72'
8" PUBLIC GRAVITY SEWER (TYP.)
2" SDR21 PVC WATER MAIN
6"x2" RED.
TOWNHOUSE
EX. FIRE HYDRANT ASSEMBLY
EX. 8" C900 PVC WATER MAIN (TYP.)
EX. 12" C900 PVC DR18 WATER MAIN (CFPUA)
EX. 10-FT NON-MUNICPAL EASEMENT
50.0' PIEDMONT NATURAL GAS EASEMENT
40.0' DUKE/PROGRESS ACCESS EASEMENT
170.0' DUKE/PROGRESS TRANSMISSION EASEMENT
50.0' DUKE/PROGRESS ACCESS EASEMENT
EX. PUBLIC DRAINAGE EASEMENT
2" G.V
2" BLOWOFF ASSEMBLY
MH #MV-30 8" PVC INV OUT = 8.01' RIM = 11.79'
30.0' PUBLIC UTILITY EASEMENT
(2)6"x2" RED.
(2)6" GV
2" SDR21 PVC WATER MAIN
6"x6" MJ TEE
MH #MV-24 8" PVC INV IN = 7.66' 8" PVC INV IN = 7.66' 8" PVC INV OUT = 7.66' RIM = 11.38'
FIRE HYDRANT ASSEMBLY (TYP.)
6"x6" MJ TEE 6" DIP
TYPICAL RES. UTILITY SERVICE
1" PE WATER LATERAL
4" PVC SDR26 LATERAL
@ 1% MIN. GRADE
SS CLEANOUT (TYP.)
3/4" WATER METER (TYP.)
REMOVE 2" BLOWOFF INSTALL 8"x6" RED.
MH #MV-23 8" PVC INV IN = 7.17' 8" PVC INV OUT = 7.17' RIM = 12.18'
MH #MV-22 8" PVC INV IN = 6.78' 8" PVC INV OUT = 6.78' RIM = 12.80'
CONNECT TO EX. PIPE STUB INSTALLED DURING PHASE 1
EX. MH #MV-21 8" PVC INV IN = 6.24' 8" PVC INV IN = 6.24' 8" PVC INV OUT = 6.24' RIM = 13.33'
REMOVE 2" BLOWOFF ASSEMBLY
MATCHLINE - SEE THIS SHEET
EX. 8" PUBLIC GRAVITY SEWER (TYP.)
35' VEGETATED BUFFER
CITY OF WILMINGTON CONSERVATION OVERLAY DISTRICT (COD)
100-YR FLOODPLAIN (AE 9 - PRELIMINARY)
100-YR FLOODPLAIN (AE 9 - EFFECTIVE)
MEAN HIGH WATER (APPROX. EL. 2)
COASTAL MARSH LINE
DOCK TO 112-SLIP OPEN WATER COMMUNITY BOATING FACILITY (CAMA PERMIT NO. 92-07)
CRABBING PIER WITH GAZEBO (CAMA PERMIT NO. 92-07)

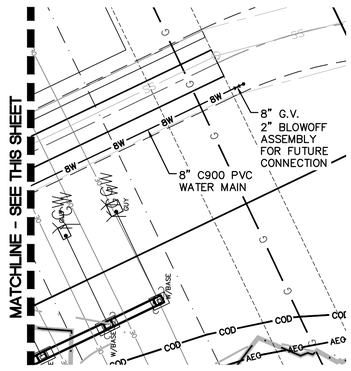

CFPUA STANDARD SEWER NOTES:

1. SEWER GUARDS REQUIRED AT ALL MANHOLES. STAINLESS STEEL SEWER GUARDS REQUIRED AT MANHOLES LOCATED IN TRAFFIC AREAS.
2. SERVICES SHALL BE PERPENDICULAR TO MAIN AND TERMINATE AT RIGHT-OF-WAY LINE. SERVICES IN CUL-DE-SACS ARE REQUIRED TO BE PERPENDICULAR, OR MUST ORIGINATE IN MANHOLE AND TERMINATE IN RIGHT-OF-WAY LINE.
3. ALL SERVICES TYING INTO DUCTILE IRON MAINS SHALL BE CONSTRUCTED OF CLASS 50, DIP, WITH PROTECTO 401 CERAMIC EPOXY LINING.
4. NO FLEXIBLE COUPLINGS SHALL BE USED.
5. ALL STAINLESS STEEL FASTENERS SHALL BE 316.

N

50' 0 50' 100'

SCALE: 1"=50' (Horiz.)

REV.NO.	DESCRIPTIONS REVISIONS	DATE
C	CITY OF WILMINGTON TECHNICAL REVIEW COMMITTEE RE-SUBMITTAL	01/07/2016
B	NEW HANOVER COUNTY EROSION AND SEDIMENT CONTROL RE-SUBMITTAL	01/04/2015
A	CITY OF WILMINGTON TECHNICAL REVIEW COMMITTEE SUBMITTAL	11/10/2015

SEAL

FINAL DRAWING FOR REVIEW PURPOSES ONLY

SEAL

McKIM & CREED
243 North Front Street
Wilmington, North Carolina 28401
Phone: (910)343-1048, Fax: (910)251-8282
License: F-1222
www.mckimcreed.com

NASH NORTH AMERICA SEKISUI HOUSE, LLC

RIVERLIGHTS by Newland COMMUNITIES

RIVERLIGHTS MARINA VILLAGE PHASE 1B

UTILITY PLAN

DATE:	10NOV15
MCE PROJ. #	2735-0124
DRAWN	ALM
DESIGNED	NJL
CHECKED	KCBE
PROJ. MGR.	NJL

SCALE
HORIZONTAL: 1"=50'
VERTICAL: N/A

M&C FILE NUMBER CU-101
DRAWING NUMBER 15

STATUS: FINAL DESIGN
NOT FOR CONSTRUCTION
REVISION C

S:\2735\0124 Marina Village\90-Drawings\Phase 1B\CU-101.dwg, 1/14/2016 10:48:09 AM, AMeindenhall

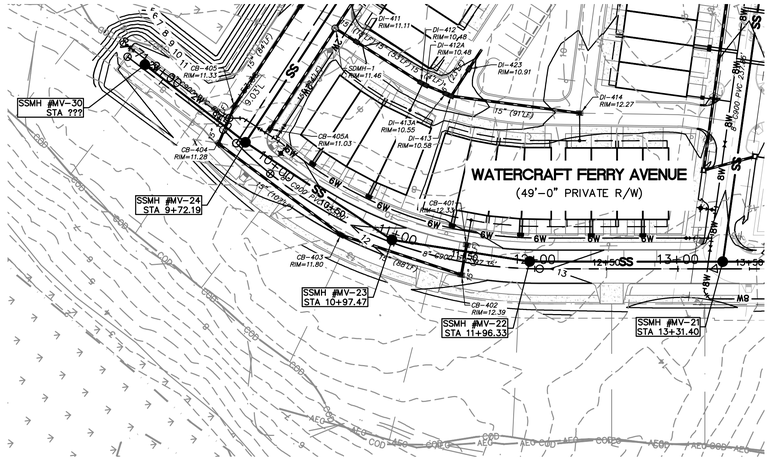

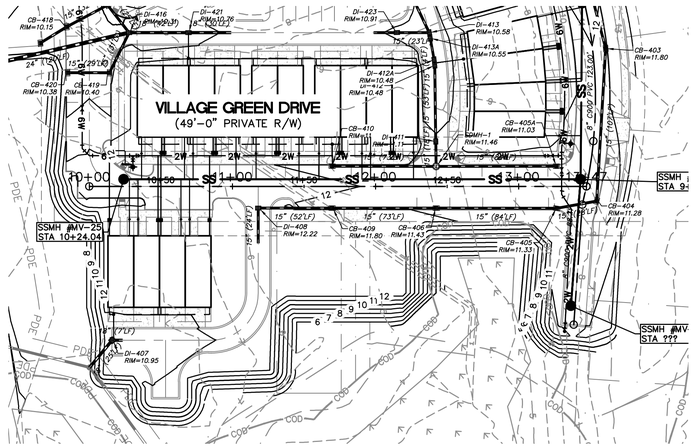

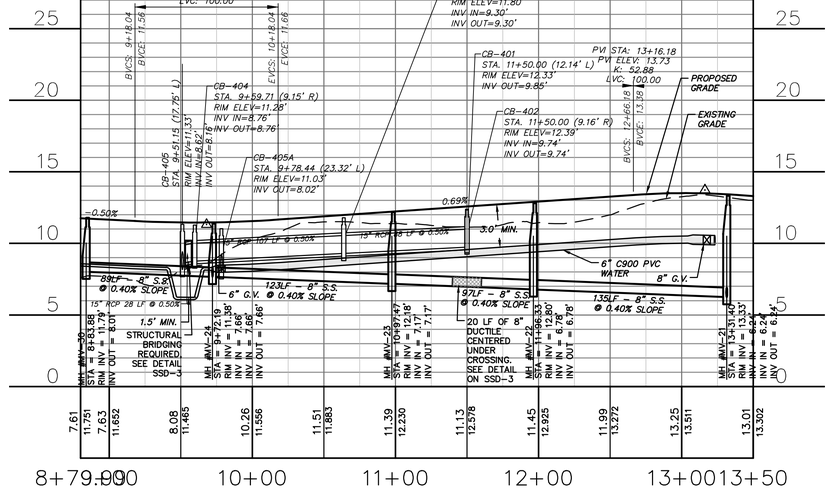

WATERCRAFT FERRY AVENUE

SCALE: HOR. 1"=50', VERT. 1"=5'

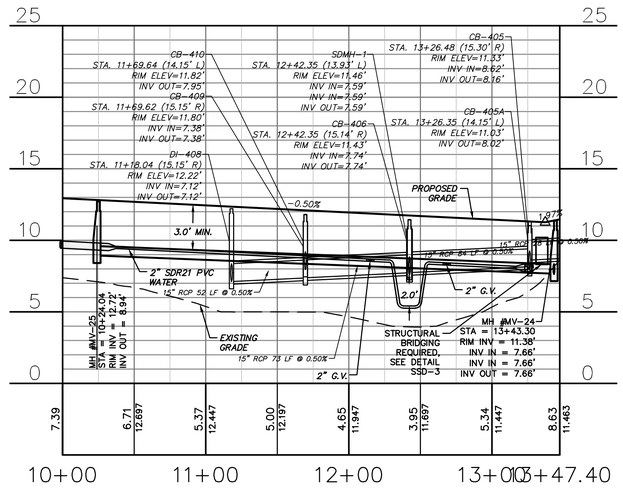

VILLAGE GREEN DRIVE

SCALE: HOR. 1"=50', VERT. 1"=5'

50' 0 50' 100'

SCALE: 1"=50' (Horiz.)

REV.NO.	DESCRIPTIONS	DATE
	REVISIONS	
C	CITY OF WILMINGTON TECHNICAL REVIEW COMMITTEE RE-SUBMITTAL	01/07/2016
B	NEW HANOVER COUNTY EROSION AND SEDIMENT CONTROL RE-SUBMITTAL	01/04/2015
A	CITY OF WILMINGTON TECHNICAL REVIEW COMMITTEE SUBMITTAL	11/10/2015

FINAL DRAWING FOR REVIEW PURPOSES ONLY

SEAL

SEAL

McKIM&CREED
243 North Front Street
Wilmington, North Carolina 28401
Phone: (910)343-1048, Fax: (910)251-8282
License: F-1222
www.mckimcreed.com

NORTH AMERICA SEKISUI HOUSE, LLC

RIVERLIGHTS™ by Newland COMMUNITIES

RIVERLIGHTS MARINA VILLAGE PHASE 1B

PLAN AND PROFILE

DATE:	10NOV15
MCE PROJ. #	2735-0124
DRAWN	ALM
DESIGNED	NJL
CHECKED	KCBE
PROJ. MGR.	NJL

SCALE
HORIZONTAL: 1"=50'
VERTICAL: 1"=5'

M&C FILE NUMBER CU-701
DRAWING NUMBER 16

STATUS: FINAL DESIGN
NOT FOR CONSTRUCTION
REVISION C

S:\2735\0124 Marina Village\60-Drawings\Phase 1B\CU-701.dwg, 1/14/2016 11:42:24 AM, AMendenhall

CFPUA STANDARD SEWER NOTES:

1. SEWER GUARDS REQUIRED AT ALL MANHOLES. STAINLESS STEEL SEWER GUARDS REQUIRED AT MANHOLES LOCATED IN TRAFFIC AREAS.
2. SERVICES SHALL BE PERPENDICULAR TO MAIN AND TERMINATE AT RIGHT-OF-WAY LINE. SERVICES IN CUL-DE-SACS ARE REQUIRED TO BE PERPENDICULAR, OR MUST ORIGINATE IN MANHOLE AND TERMINATE IN RIGHT-OF-WAY LINE.
3. ALL SERVICES TYING INTO DUCTILE IRON MAINS SHALL BE CONSTRUCTED OF CLASS 50, DIP, WITH PROTECTO 401 CERAMIC EPOXY LINING.
4. NO FLEXIBLE COUPLINGS SHALL BE USED.
5. ALL STAINLESS STEEL FASTENERS SHALL BE 316.

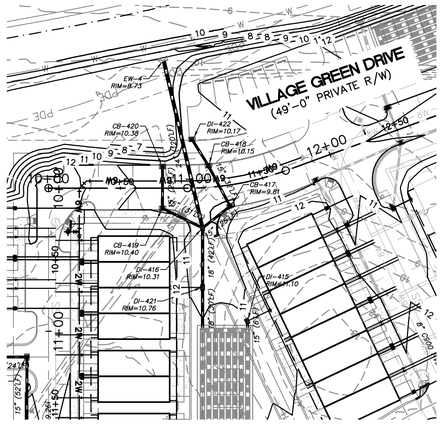

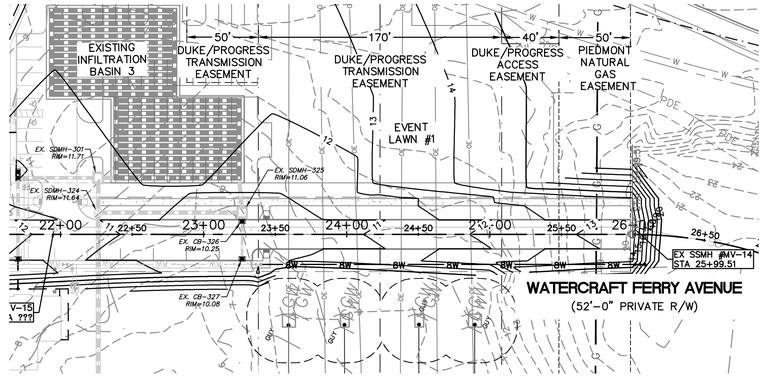

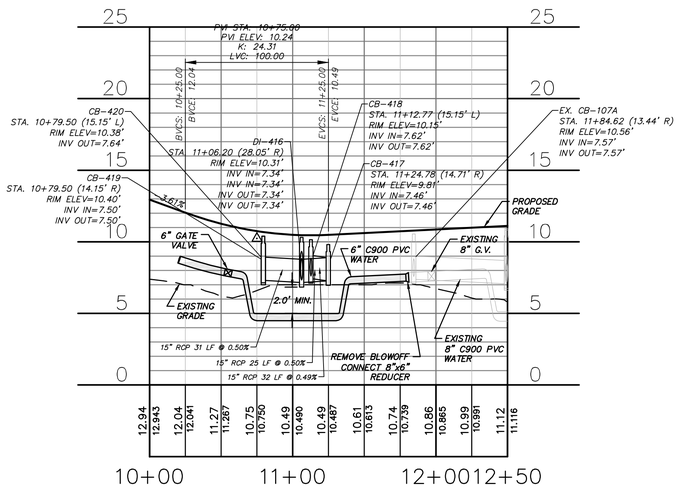

VILLAGE GREEN DRIVE

SCALE: HOR. 1"=50', VERT. 1"=5'

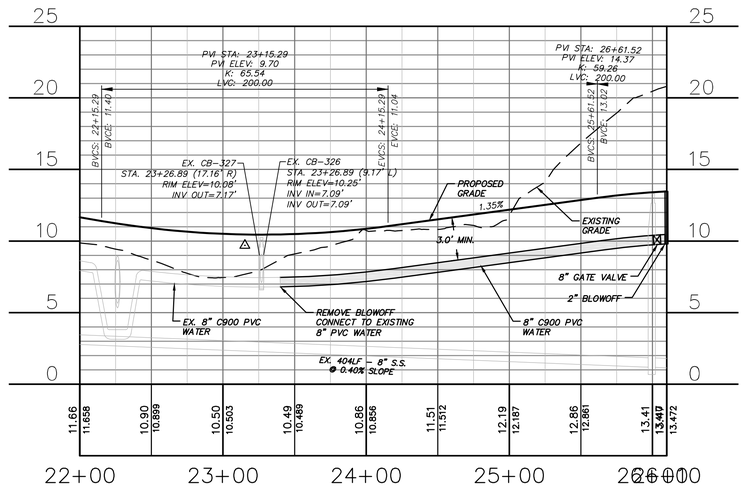

WATERCRAFT FERRY AVENUE

SCALE: HOR. 1"=50', VERT. 1"=5'

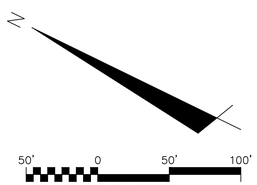

REV.NO.	DESCRIPTIONS	DATE
	REVISIONS	
C	CITY OF WILMINGTON TECHNICAL REVIEW COMMITTEE RE-SUBMITTAL	01/07/2016
B	NEW HANOVER COUNTY EROSION AND SEDIMENT CONTROL RE-SUBMITTAL	01/04/2015
A	CITY OF WILMINGTON TECHNICAL REVIEW COMMITTEE SUBMITTAL	11/10/2015

FINAL DRAWING FOR REVIEW PURPOSES ONLY

SEAL

SEAL

McKIM&CREED
243 North Front Street
Wilmington, North Carolina 28401
Phone: (910)343-1048, Fax: (910)251-8282
License: F-1222
www.mckimcreed.com

NASH — NORTH AMERICA SEKISUI HOUSE, LLC

RIVERLIGHTS™ by Newland COMMUNITIES

RIVERLIGHTS MARINA VILLAGE
PHASE 1B

PLAN AND PROFILE

DATE:	10NOV15
MCE PROJ. #	2735-0124
DRAWN	ALM
DESIGNED	NJL
CHECKED	KCBE
PROJ. MGR.	NJL

SCALE
HORIZONTAL: 1"=50'
VERTICAL: 1"=5'

M&C FILE NUMBER CU-702
DRAWING NUMBER 17

STATUS: FINAL DESIGN
NOT FOR CONSTRUCTION
REVISION C

S:\2735\0124 Marina Village\90-Drawings\Phase 1B\CU-702.dwg, 11/4/2016 10:52:34 AM, AMeindenhall

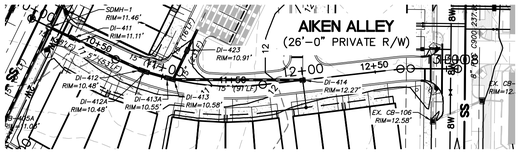

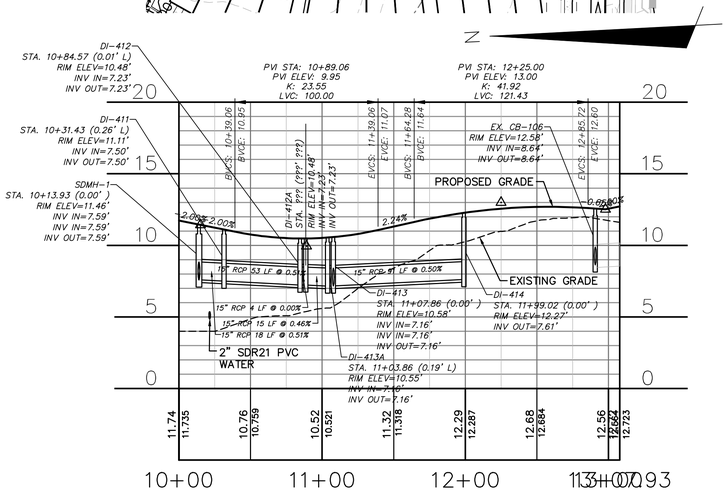

AIKEN ALLEY

HOR. 1"=50', VERT. 1"=5'

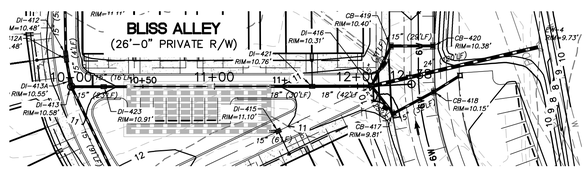

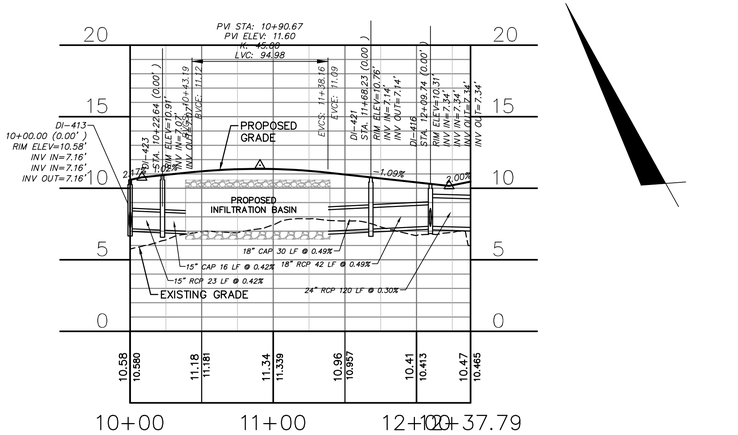

BLISS ALLEY

HOR. 1"=50', VERT. 1"=5'

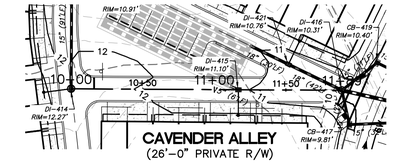

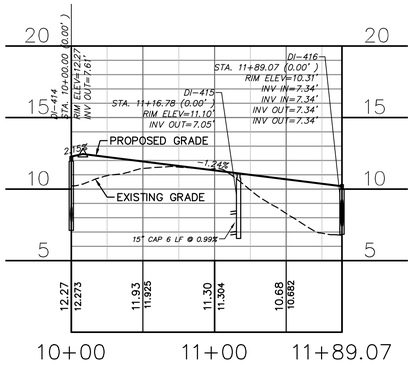

CAVENDER ALLEY

HOR. 1"=50', VERT. 1"=5'

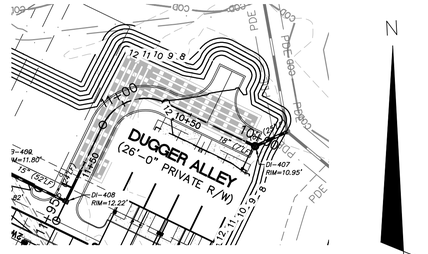

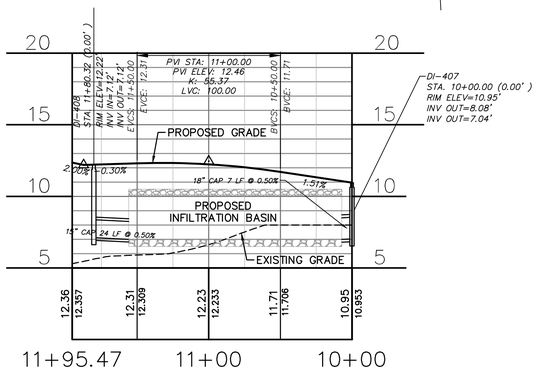

DUGGER ALLEY

HOR. 1"=50', VERT. 1"=5'

50' 0 50' 100'

SCALE: 1"=50' (Horiz.)

REV.NO.	DESCRIPTIONS REVISIONS	DATE
C	CITY OF WILMINGTON TECHNICAL REVIEW COMMITTEE RE-SUBMITTAL	01/07/2016
B	NEW HANOVER COUNTY EROSION AND SEDIMENT CONTROL RE-SUBMITTAL	01/04/2015
A	CITY OF WILMINGTON TECHNICAL REVIEW COMMITTEE SUBMITTAL	11/10/2015

SEAL

FINAL DRAWING FOR REVIEW PURPOSES ONLY

SEAL

McKIM&CREED
243 North Front Street
Wilmington, North Carolina 28401
Phone: (910)343-1048, Fax: (910)251-8282
License: F-1222
www.mckimcreed.com

NASH
NORTH AMERICA SEKISUI HOUSE, LLC

RIVERLIGHTS™
by Newland COMMUNITIES

RIVERLIGHTS MARINA VILLAGE PHASE 1B

PLAN AND PROFILE

DATE:	10NOV15
MCE PROJ. #	2735-0124
DRAWN	ALM
DESIGNED	NJL
CHECKED	KCBE
PROJ. MGR.	NJL

SCALE
HORIZONTAL: 1"=50'
VERTICAL: 1"=5'

M&C FILE NUMBER CU-703
DRAWING NUMBER 18

STATUS: FINAL DESIGN
NOT FOR CONSTRUCTION
REVISION C

S:\2735\0124 Marina Village\9D-Drawings\Phase 1B\CU-703.dwg, 1/14/2016 10:56:31 AM, AMendenhall

PLANTING NOTES

1. EXISTING UTILITIES SHOWN ARE APPROXIMATE AND SHALL BE VERIFIED IN THE FIELD PRIOR TO BEGINNING WORK. CONTRACTOR SHALL CONTACT THE CITY OF WILMINGTON FOR LOCATION OF EXISTING UTILITIES PRIOR TO BEGINNING CONSTRUCTION. THE CONTRACTOR SHALL EXERCISE CAUTION WHEN WORKING AROUND EXISTING UTILITIES TO REMAIN.
2. PLANT LIST IS PROVIDED FOR CONVENIENCE ONLY. IN THE CASE OF DISCREPANCIES BETWEEN THE PLAN AND PLANT LIST QUANTITIES, THE PLAN SHALL TAKE PRECEDENCE.
3. AFTER THE SITE IS STABILIZED AND FREE OF SEDIMENTATION, THE CONTRACTOR SHALL REMOVE ALL TEMPORARY EROSION CONTROL DEVICES, SILT, RIP RAP AND TEMPORARY STONE STAGING AREAS FOR REPLACEMENT WITH PLANTING SOIL. PROVIDE PLANTING ACCORDING TO THE LANDSCAPE PLAN.
4. TEMPORARY EROSION CONTROL SEED MUST BE FULLY REMOVED PRIOR TO PREPARATION OF PERMANENT SEED, SOD OR LANDSCAPE BEDS.
5. UNLESS OTHERWISE NOTED IN THE PLANT LIST, THE CONTRACTOR SHALL OBTAIN AND INSTALL ONLY PLANT MATERIAL THAT IS GROWN ON ITS OWN ROOT - GRAFTED OR BUDDED PLANT MATERIAL WILL BE REJECTED.
6. ALL TREES SHALL BE OBTAINED FROM THE NURSERY WITH EXPOSED ROOT CROWNS. B&B MATERIAL DELIVERED TO SITE WITH BURIED OR RECENTLY BURIED ROOT CROWNS WILL BE REJECTED.
7. CONTRACTOR SHALL NOTIFY LANDSCAPE ARCHITECT OF PLANT SUBSTITUTIONS IN ANY MEASUREMENT OR SPECIES INDICATED.
8. DO NOT PLANT IN STORM WATER CONVEYANCE SWALES OR PROVIDE FINE GRADING THAT DISRUPTS FLOW OR CHANGES LONGITUDINAL SLOPES.
9. PLANT THE OUTER EDGES OF EACH PLANTING GROUP FOLLOWING THE BED OUTLINE ACCORDING TO THE PLAN, ONCE A SATISFACTORY MATCHED OUTER SHAPE IS OBTAINED, FILL THE CENTER OF EACH AREA WITH PLANTS ACCORDING TO THE PLAN AND SPACING NOTES.
10. THE PLANTING LAYOUT WITHIN PLANTING BEDS SHOULD BE SHIFTED TO MINIMIZE CONFLICTS WITH EXISTING TREE ROOTS.
11. THE CONTRACTOR SHALL SOD ALL DISTURBED AREAS INCLUDING CONSTRUCTION ACCESS OUTSIDE PROJECT LIMITS.
12. DRAWING L-160 IS SHOWN TO EXHIBIT THE OVERALL SCOPE OF THE MARINA VILLAGE PHASE 1B PLAN; REFER TO SHEET L-161 AND L-162 FOR ALL PLANTING INFORMATION.

RIVER ROAD

REFER TO L161

REFER TO RIVER ROAD PLANS FOR INFORMATION OUTSIDE OF DASHED LINE

REFER TO L162

VILLAGE GREEN DRIVE

HOBIE RUN

PIER MASTER POINT

VILLAGE GREEN DRIVE

ARCADIAN ROW

PRIVATE DRIVE

REFER TO MARINA VILLAGE PHASE 1 PLANS FOR INFORMATION OUTSIDE OF DASHED LINE

WATERCRAFT FERRY AVENUE

REFER TO MARINA VILLAGE PHASE 1 PLANS FOR INFORMATION OUTSIDE OF DASHED LINE

1 inch

For each open utility cut of City streets, a $325 permit shall be required from the City prior to occupancy and/or project acceptance.

Approved Construction Plan

	Name	Date
Planning		
Traffic		
Fire		

CITY OF WILMINGTON NORTH CAROLINA

Public Services ◦ Engineering Division

APPROVED STORMWATER MANAGEMENT PLAN

Date:_____ Permit #_____

Signed: _____

SCALE: 1" = 60'-0"

0 30 60 120

N

REV.NO.	DESCRIPTIONS	DATE
	CITY OF WILMINGTON TRC SUBMITTAL 2	01/08/2016
A	TRC SUBMITTAL	11/03/15

REVISIONS

SEAL — NORTH CAROLINA — FINAL DRAWINGS DO NOT USE FOR CONSTRUCTION — 678 — P.A.

SEAL — NORTH CAROLINA — FINAL DRAWINGS DO NOT USE FOR CONSTRUCTION — ERIC DAVIS — P.E.

McKIM&CREED

License: F-1222

www.mckimcreed.com

NORTH AMERICA SEKISUI HOUSE, LLC

RIVERLIGHTS by Newland COMMUNITIES

Surface

Surface 678, P.A.
215 Morris Street, Suite 150
Durham, NC 27701
www.surface678.com
p: 919-419-1199
f: 919-419-1669

OVERALL PLANTING PLAN SHEET REFERENCE

MARINA VILLAGE PHASE 1B

DATE:	11/03/2015
MCE PROJ. #	
DRAWN	JI
DESIGNED	ED
CHECKED	JC, ED
PROJ. MGR.	JC

SCALE

M&C FILE NUMBER

DRAWING NUMBER

L160

STATUS: FINAL DESIGN

REVISION

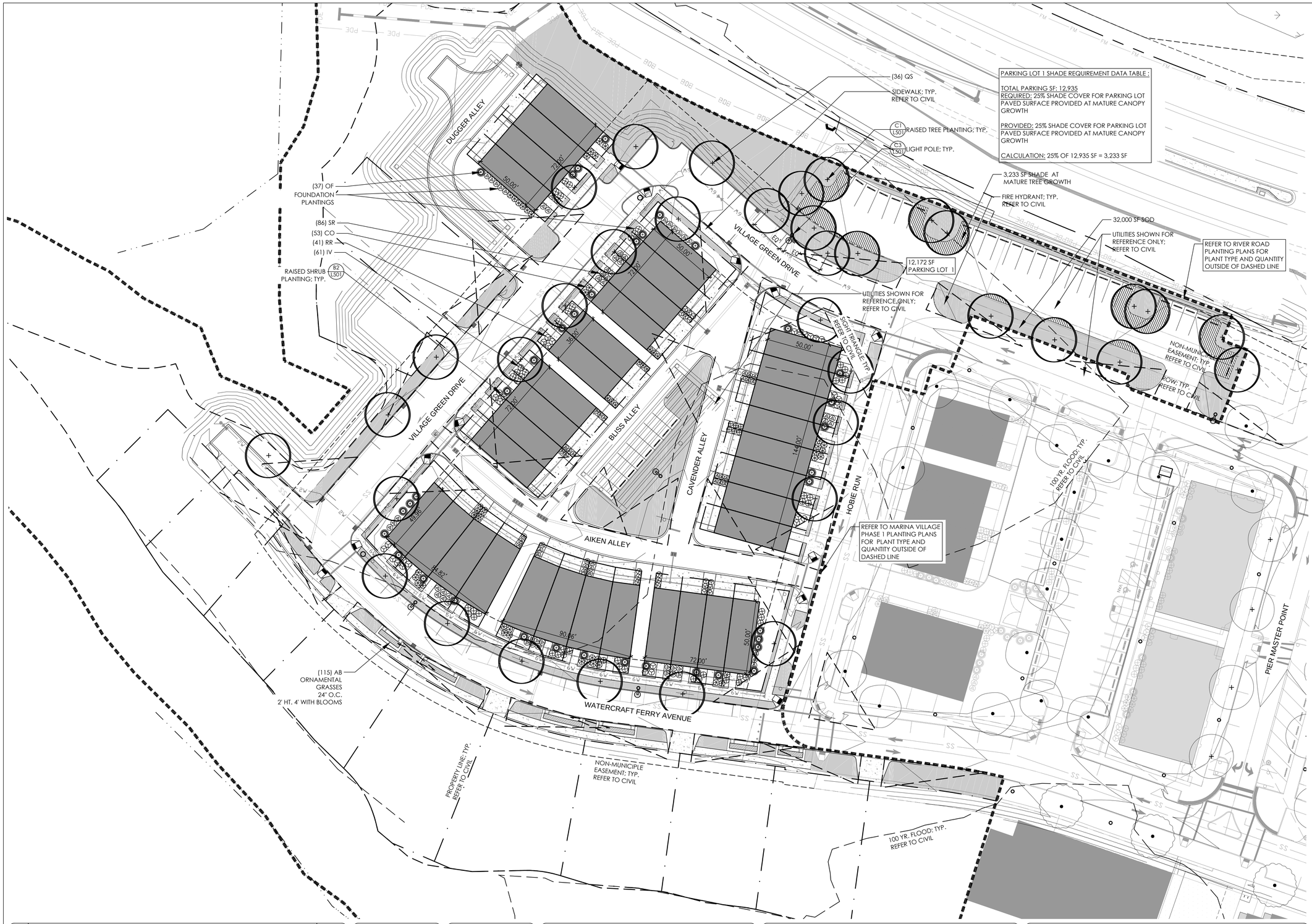

PARKING LOT 1 SHADE REQUIREMENT DATA TABLE :

TOTAL PARKING SF: 12,935
REQUIRED: 25% SHADE COVER FOR PARKING LOT PAVED SURFACE PROVIDED AT MATURE CANOPY GROWTH

PROVIDED: 25% SHADE COVER FOR PARKING LOT PAVED SURFACE PROVIDED AT MATURE CANOPY GROWTH

CALCULATION: 25% OF 12,935 SF = 3,233 SF

LEGEND	
	PARKING LOT SHADE REQUIREMENT
	SOD; 419 TIFWAY BERMUDA; SAND BASED SOD
TREES	
+	QUERCUS SHUMARDII
SHRUBS	
	SERENOA REPENS
	CHAMAECYPARIS OBTUSA 'NANA' GRACILLIS
	ILEX VOMITORIA OBTUSA 'NANA'
	ROSA 'RADRAZZ'
	OSMANTHUS FORTUNEI
SIGHT LIGTHING	
	LIGHT POLE; TYP. REFER TO DETAIL C3 / L501

1 inch

For each open utility cut of City streets, a $325 permit shall be required from the City prior to occupancy and/or project acceptance.

Approved Construction Plan

	Name	Date
Planning		
Traffic		
Fire		

CITY OF WILMINGTON NORTH CAROLINA
Public Services ◦ Engineering Division
APPROVED STORMWATER MANAGEMENT PLAN
Date:_____ Permit #_____
Signed: _____

SCALE: 1" = 30'-0"
0 15 30 60

REV.NO.	DESCRIPTIONS	DATE
	CITY OF WILMINGTON TRC SUBMITTAL 2	01/08/2016

REVISIONS

SEAL: NORTH CAROLINA FINAL DRAWINGS DO NOT USE FOR CONSTRUCTION 678 P.A.

SEAL: NORTH CAROLINA FINAL DRAWINGS DO NOT USE FOR CONSTRUCTION 2300 ERIC DAVIS

McKIM&CREED
License: F-1222
www.mckimcreed.com

NASH NORTH AMERICA SENSUS HOUSE, LLC
RIVERLIGHTS by Newland COMMUNITIES
Surface
Surface 678, P.A.
215 Morris Street, Suite 150
Durham, NC 27701
www.surface678.com
p: 919-419-1199
f: 919-419-1669

PLANTING PLAN NORTH

MARINA VILLAGE PHASE 1B

DATE:	11/03/2015
MCE PROJ. #	
DRAWN	JI
DESIGNED	ED
CHECKED	JC, ED
PROJ. MGR.	JC

SCALE

M&C FILE NUMBER

DRAWING NUMBER L161

STATUS: FINAL DESIGN

REVISION

A TRC SUBMITTAL 11/03/15

PLANTING SCHEDULE: MARINA VILLAGE PHASE 1B

SYM	QTY	BOTANICAL NAME	COMMON NAME	CAL/RT	MIN. HT.	MIN. SPR.	REMARKS
STREET TREES							
QS	68	QUERCUS SHUMARDII	SHUMARD OAK	2-2 1/2"	----	----	STRONG CENTRAL LEADER; NO INCLUDED BARK
DECIDUOUS SHRUBS							
RR	41	ROSA 'RADRAZZ'	KNOCKOUT ROSE	CONT	12"	12"	FULL DENSE
EVERGREEN SHRUBS							
CO	53	CHAMAECYPARIS OBTUSA 'NANA' GRACILLIS	DWARF HINOKI CYPRESS	CONT	12"	12"	FULL DENSE
IV	61	ILEX VOMITORIA 'NANA'	DWARF YAUPON HOLLY	CONT	12"	12"	FULL DENSE
OF	37	OSMANTHUS FORTUNEI	TEA OLIVE	CONT	12"	12"	FULL DENSE
SR	86	SERENOA REPENS	SAW PALMETTO	CONT	12"	12"	FULL DENSE
ORNAMENTAL GRASEES							
AB	115	AMMOPHILA BREVILIGULATA	AMERICAN BEACH GRASS	----	----	----	----
SOD							
							419 TIFWAY BERMUDA SAND BASED SOD

PARKING LOT 2 SHADE REQUIREMENT DATA TABLE :

TOTAL PARKING SF: 17,195
REQUIRED: 25% SHADE COVER FOR PARKING LOT PAVED SURFACE PROVIDED AT MATURE CANOPY GROWTH

PROVIDED: 25% SHADE COVER FOR PARKING LOT PAVED SURFACE PROVIDED AT MATURE CANOPY GROWTH

CALCULATION: 25% OF 17,195 SF = 4,298 SF

REFER TO RIVER ROAD PALNTING PLANS FOR PLANT TYPE AND QUANTITY OUTSIDE OF DASHED LINE

4,298 SF SHADE AT MATURE GROWTH

(32) QS

C1 L501 RAISED TREE PLANTING; TYP.

C3 L501 LIGHT POLE; TYP.

SOD

EVENT LAWN #1

EASEMENT; TYP. REFER TO CIVIL

POWER EASEMENT; TYP. REFER TO CIVIL

NONMUNICIPAL EASEMENT; TYP. REFER TO CIVIL

VILLAGE GREEN DRIVE

16,927 SF PARKING LOT 2

REFER TO MARINA VILLAGE PHASE 1 PLANS FOR SCREENING PLANT TYPE AND QUANTITY

REFER TO MARINA VILLAGE PHASE 1 PLANTING PLANS FOR PLANT TYPE AND QUANTITY OUTSIDE OF DASHED LINE

1,740 SF SHADE AT MATURE GROWTH

6,019 SF PARKING LOT 3

6,958 SF PARKING LOT 4

PRIVATE DRIVE

ARCADIAN ROW

WATERCRAFT FERRY AVENUE

100 YR. FLOOD; TYP. REFER TO CIVIL

PARKING LOT 4 SHADE REQUIREMENT DATA TABLE :

TOTAL PARKING SF: 6,958
REQUIRED: 25% SHADE COVER FOR PARKING LOT PAVED SURFACE PROVIDED AT MATURE CANOPY GROWTH

PROVIDED: 25% SHADE COVER FOR PARKING LOT PAVED SURFACE PROVIDED AT MATURE CANOPY GROWTH

CALCULATION: 25% OF 6,958 SF = 1,740 SF

PARKING LOT 3 SHADE REQUIREMENT DATA TABLE :

TOTAL PARKING SF: 6,019
REQUIRED: 25% SHADE COVER FOR PARKING LOT PAVED SURFACE PROVIDED AT MATURE CANOPY GROWTH

PROVIDED: 25% SHADE COVER FOR PARKING LOT PAVED SURFACE PROVIDED AT MATURE CANOPY GROWTH

LEGEND

- PARKING LOT SHADE REQUIREMENT
- SOD; 419 TIFWAY BERMUDA; SAND BASED SOD

TREES

- QUERCUS SHUMARDII

SHRUBS

- SERENOA REPENS
- CHAMAECYPARIS OBTUSA 'NANA' GRACILLIS
- ILEX VOMITORIA OBTUSA 'NANA'
- ROSA 'RADRAZZ'
- OSMANTHUS FORTUNEI

SIGHT LIGTHING

- LIGHT POLE; TYP. REFER TO DETAIL C3 / L501

1 inch

For each open utility cut of City streets, a $325 permit shall be required from the City prior to occupancy and/or project acceptance.

Approved Construction Plan

Name Date

Planning_____

Traffic_____

Fire_____

CITY OF WILMINGTON NORTH CAROLINA

Public Services ◦ Engineering Division

APPROVED STORMWATER MANAGEMENT PLAN

Date:_____ Permit #_____

Signed: _____

SCALE: 1" = 30'-0"

0 15 30 60

N

REV.NO.	DESCRIPTIONS	DATE
	CITY OF WILMINGTON TRC SUBMITTAL 2	01/08/2016

REVISIONS

SEAL — NORTH CAROLINA — FINAL DRAWINGS — DO NOT USE FOR CONSTRUCTION — ERIC DAVIS — 6782 — PE

SEAL — NORTH CAROLINA — FINAL DRAWINGS — DO NOT USE FOR CONSTRUCTION — JOHN ERIC DAVIS — 27812 — PE

McKIM&CREED

License: F-1222

www.mckimcreed.com

NASH — NORTH AMERICA STADIUM HOUSE, LLC

RIVERLIGHTS by Newland COMMUNITIES

Surface

Surface 678, P.A.
215 Morris Street, Suite 150
Durham, NC 27701

www.surface678.com
p: 919-419-1199
f: 919-419-1669

PLANTING PLAN SOUTH

MARINA VILLAGE PHASE 1B

DATE:	11/03/2015
MCE PROJ. #	
DRAWN	JI
DESIGNED	ED
CHECKED	JC, ED
PROJ. MGR.	JC

SCALE

M&C FILE NUMBER

DRAWING NUMBER

L162

STATUS: FINAL DESIGN

REVISION

A TRC SUBMITTAL 11/03/15

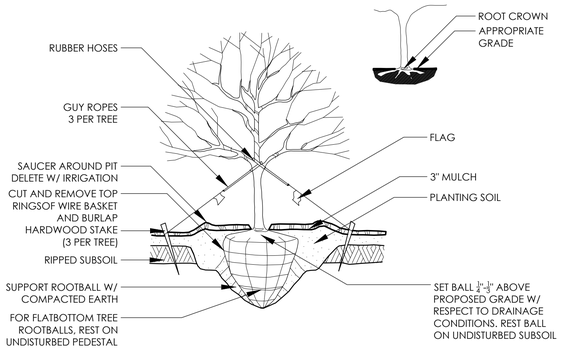

C1 RAISED TREE PLANTING

SCALE: NTS

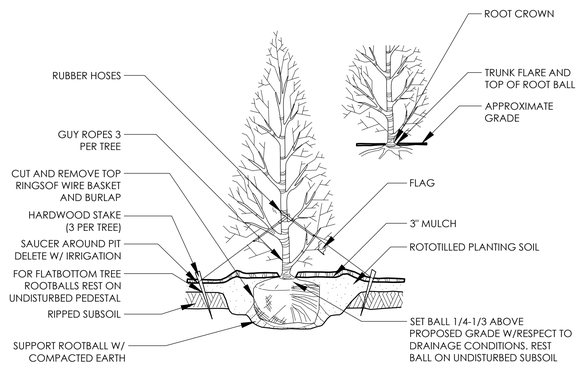

B1 EVERGREEN TREE PLANTING

SCALE: NTS

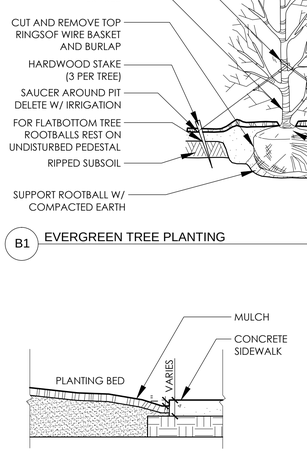

A1 CONCRETE/PLANT BED EDGE

0 1' 2'

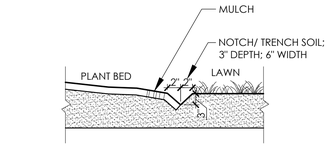

D1 LAWN/PLANT BED EDGE

0 1' 2'

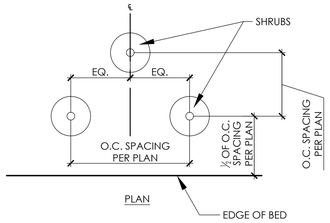

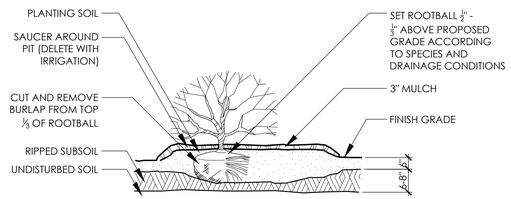

B2 RAISED SHRUB PLANTING

SCALE: NTS

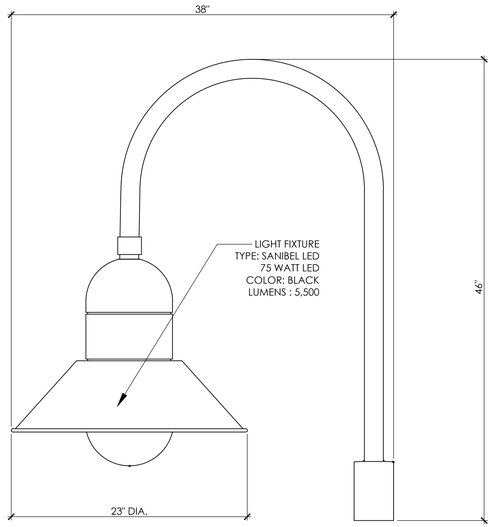

NON STANDARD LIGHT FIXTURE DETAIL

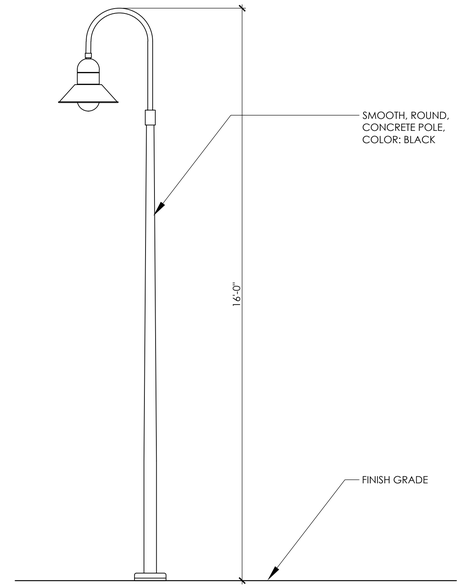

LIGHT FIXTURE POLE ELEVATION

C3 LIGHT POLE

* LIGHT POLE SHOWN FOR REFERENCE ONLY.

* LIGHT POLE TO BE SIMILAR IN STYLE, COLOR, TYPE.

* FINAL LAYOUT AND FOOT CANDLE STUDIES SHALL BE PROVIDED BY THE POWER COMPANY.

0 1' 2'

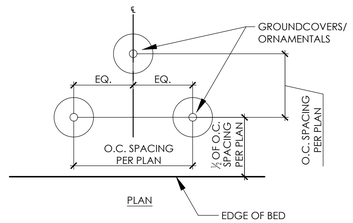

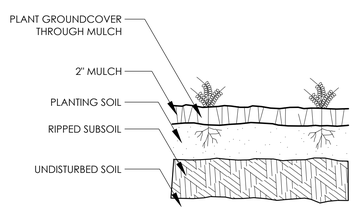

A3 GROUNDCOVER PLANTING

SCALE: NTS

1 inch

For each open utility cut of City streets, a $325 permit shall be required from the City prior to occupancy and/or project acceptance.

Approved Construction Plan

Name Date

Planning

Traffic

Fire

CITY OF WILMINGTON NORTH CAROLINA

Public Services ◦ Engineering Division

APPROVED STORMWATER MANAGEMENT PLAN

Date: Permit #

Signed:

REV.NO.	DESCRIPTIONS	DATE
	CITY OF WILMINGTON TRC SUBMITTAL 2	01/08/2016

REVISIONS

SEAL — NORTH CAROLINA — FINAL DRAWINGS NOT TO BE USED FOR CONSTRUCTION — 678

SEAL — NORTH CAROLINA — FINAL DRAWINGS NOT TO BE USED FOR CONSTRUCTION — ERIC DAVIS

McKIM&CREED

License: F-1222

www.mckimcreed.com

NASH — North America Sekisui House, LLC

RIVERLIGHTS by Newland COMMUNITIES

Surface

Surface 678, P.A.
205 Morris Street, Suite 150
Durham, NC 27701
www.surface678.com
p: 919-419-1199
f: 919-419-1669

LANDSCAPE DETAILS

MARINA VILLAGE PHASE 1B

DATE:	11/03/2015
MCE PROJ. #	
DRAWN	JI
DESIGNED	ED
CHECKED	JC, ED
PROJ. MGR.	JC

SCALE

M&C FILE NUMBER

DRAWING NUMBER

L501

STATUS: FINAL DESIGN

REVISION

A TRC SUBMITTAL 11/03/15

INFILTRATION GALLERY 4

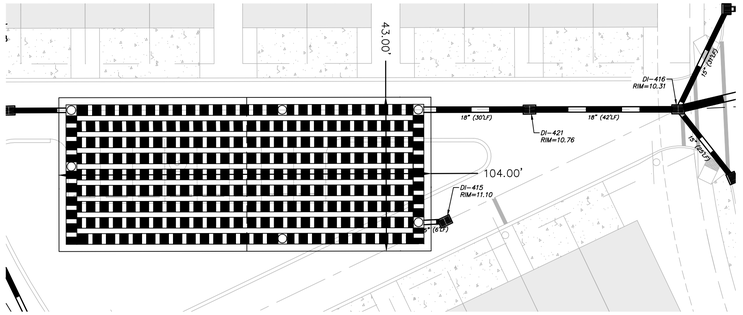

PLAN VIEW
SCALE: 1" = 20'

INFILTRATION GALLERY 4
DA= 1.89 AC
WQV STORAGE REQD.= 5,073 CF
STORAGE PROV.= 10,972 CF

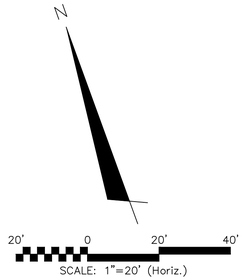

SCALE: 1"=20' (Horiz.)

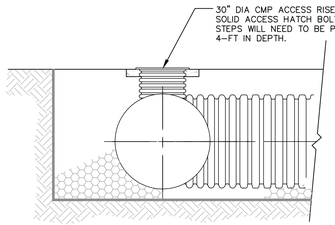

TYP. CMP ACCESS RISER
NOT TO SCALE

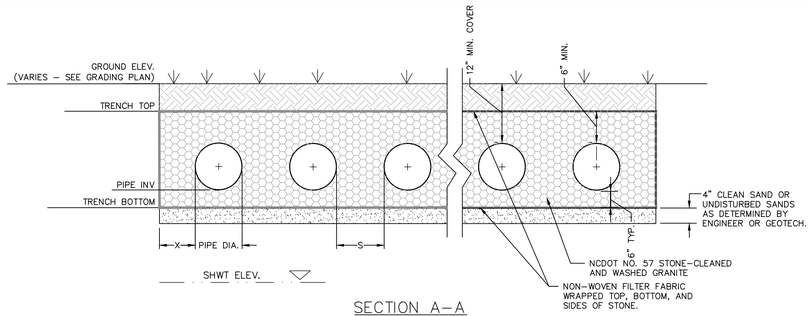

SECTION A–A
NOT TO SCALE

INFILTRATION GALLERY 5

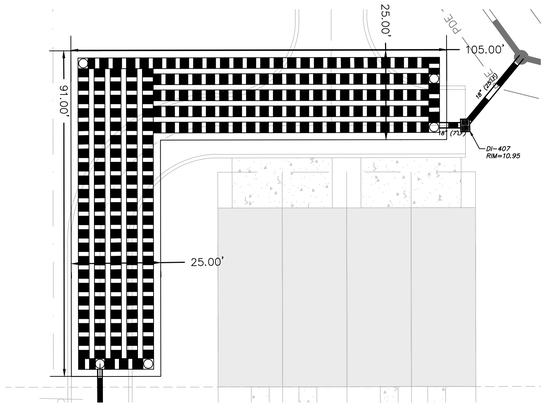

PLAN VIEW
SCALE: 1" = 20'

INFILTRATION GALLERY 5
DA= 1.91 AC
WQV STORAGE REQD.= 5,262 CF
STORAGE PROV.= 10,381 CF

SPLITTER /BYPASS STRUCTURE TABLE		
DESIGN	DI–416	DI–407
RIM ELEVATION	10.31'	10.95'
WEIR ELEVATION	9.00'	9.25'
SUMP ELEVATION	7.34'	7.03'
OUTFALL PIPE INVERT	8.06'	8.08'

INFILTRATION TRENCH SYSTEM TABLE		
DESIGN	INFILTRATION GALLERY 4	INFILTRATION GALLERY 5
# OF RUNS	9	5
LENGTH PER RUN	100'	167'
PIPE DIAMETER (IN)	36"CAP	36"CAP
MIN. X (IN)	2'	2'
MIN. S (IN)	1/2 DIA. OF PIPE	1/2 DIA. OF PIPE
TRENCH WIDTH (FT)	43'	25.0'
TRENCH LENGTH (FT)	104'	171'
SHWT ELEVATION	4.50'	4.50'
TRENCH BOTTOM ELEVATION	6.50'	6.50'
PIPE TRENCH INVERT	7.00'	7.00'
TRENCH TOP ELEVATION	10.50'	10.50'
10–YR WSEL	9.26'	9.62'

NOTES:
1. SHWT AND HIGH RIVER ELEVATIONS TAKEN FROM SITE & SOILS EVALUATION REPORT BY ECS CAROLINAS, LLP DATED FEBRUARY 18, 2015 FOR NEWLAND COMMUNITIES, LLC.
2. EXISTING ELEVATIONS TAKEN FROM COMBINATION OF FIELD MEASUREMENTS AND TOPOGRAPHY SURVEY BY MCKIM & CREED, INC.

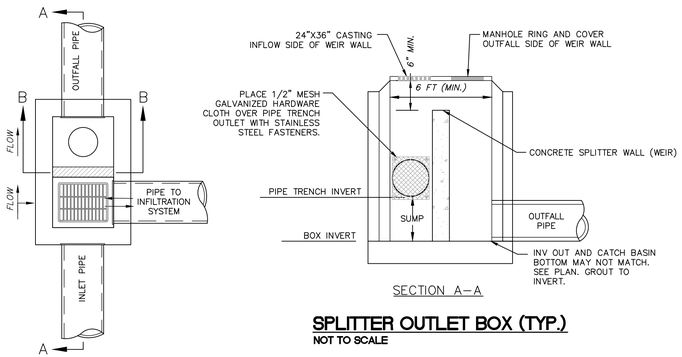

PLAN

SECTION A–A

SECTION B–B

SPLITTER OUTLET BOX (TYP.)
NOT TO SCALE

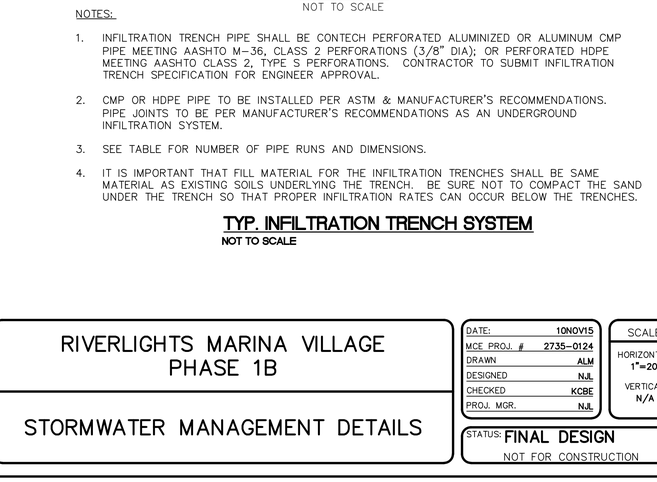

PLAN VIEW
NOT TO SCALE

NOTES:

1. INFILTRATION TRENCH PIPE SHALL BE CONTECH PERFORATED ALUMINIZED OR ALUMINUM CMP PIPE MEETING AASHTO M–36, CLASS 2 PERFORATIONS (3/8" DIA); OR PERFORATED HDPE MEETING AASHTO CLASS 2, TYPE S PERFORATIONS. CONTRACTOR TO SUBMIT INFILTRATION TRENCH SPECIFICATION FOR ENGINEER APPROVAL.
2. CMP OR HDPE PIPE TO BE INSTALLED PER ASTM & MANUFACTURER'S RECOMMENDATIONS. PIPE JOINTS TO BE PER MANUFACTURER'S RECOMMENDATIONS AS AN UNDERGROUND INFILTRATION SYSTEM.
3. SEE TABLE FOR NUMBER OF PIPE RUNS AND DIMENSIONS.
4. IT IS IMPORTANT THAT FILL MATERIAL FOR THE INFILTRATION TRENCHES SHALL BE SAME MATERIAL AS EXISTING SOILS UNDERLYING THE TRENCH. BE SURE NOT TO COMPACT THE SAND UNDER THE TRENCH SO THAT PROPER INFILTRATION RATES CAN OCCUR BELOW THE TRENCHES.

TYP. INFILTRATION TRENCH SYSTEM
NOT TO SCALE

REV.NO.	DESCRIPTIONS	DATE
	REVISIONS	
C	CITY OF WILMINGTON TECHNICAL REVIEW COMMITTEE RE-SUBMITTAL	01/07/2016
B	NEW HANOVER COUNTY EROSION AND SEDIMENT CONTROL RE-SUBMITTAL	01/04/2015
A	CITY OF WILMINGTON TECHNICAL REVIEW COMMITTEE SUBMITTAL	11/10/2015

SEAL

FINAL DRAWING FOR REVIEW PURPOSES ONLY

SEAL

McKIM&CREED
243 North Front Street
Wilmington, North Carolina 28401
Phone: (910)343–1048, Fax: (910)251–8282
License: F–1222
www.mckimcreed.com

NORTH AMERICA SEKISUI HOUSE, LLC

RIVERLIGHTS™ by Newland COMMUNITIES

RIVERLIGHTS MARINA VILLAGE
PHASE 1B

STORMWATER MANAGEMENT DETAILS

DATE:	10NOV15
MCE PROJ. #	2735–0124
DRAWN	ALM
DESIGNED	NJL
CHECKED	KCBE
PROJ. MGR.	NJL

SCALE
HORIZONTAL: 1"=20'
VERTICAL: N/A

M&C FILE NUMBER: CN–501
DRAWING NUMBER: 23

STATUS: **FINAL DESIGN**
NOT FOR CONSTRUCTION
REVISION: C

S:\2735\0124 Marina Village\60-Drawings\Phase 1B\CN-501.dwg, 1/14/2016 11:00:42 AM, AMendenhall

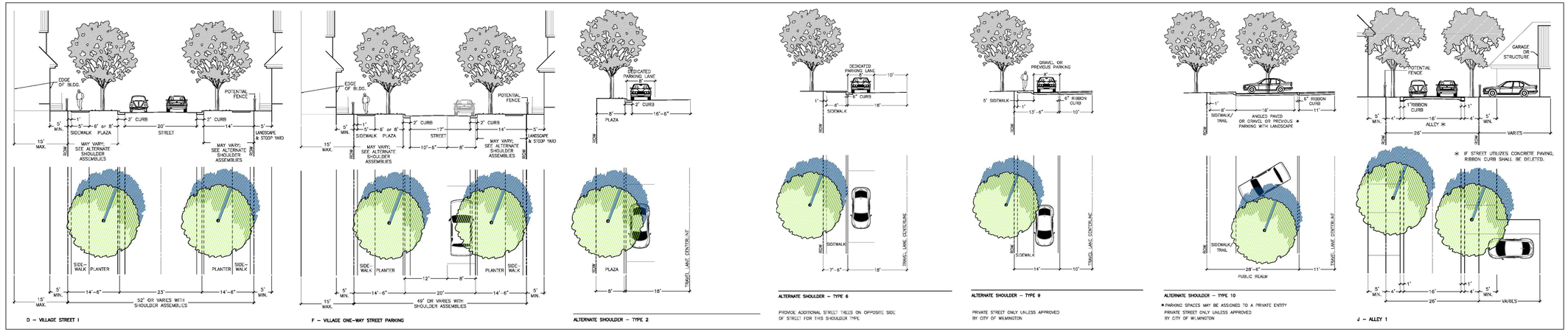

ILLUSTRATIVE STREET SECTIONS FROM DEVELOPMENT AGREEMENT

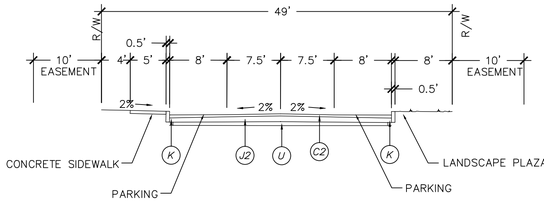

UNDIVIDED TYPICAL SECTION
VILLAGE ONE WAY STREET PARKING
49' PUBLIC R/W
VILLAGE GREEN DRIVE

NOT TO SCALE

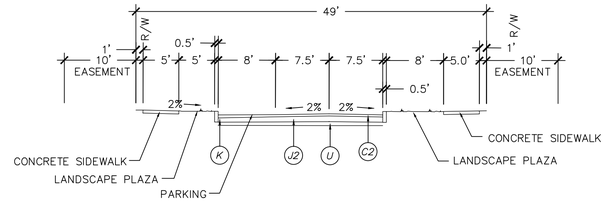

UNDIVIDED TYPICAL SECTION
VILLAGE ONE WAY STREET PARKING
49' PUBLIC R/W
WATERCRAFT FERRY AVENUE

NOT TO SCALE

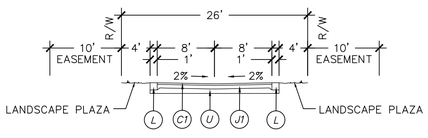

ALLEY TYPICAL SECTION
26' PUBLIC R/W
NOT TO SCALE

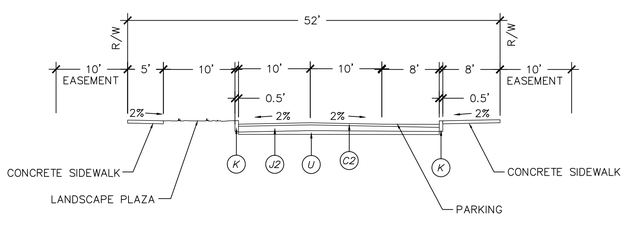

UNDIVIDED TYPICAL SECTION
VILLAGE STREET 1 W/ALTERNATE SHOULDER 4 + 6
52' PRIVATE R/W
NOT TO SCALE

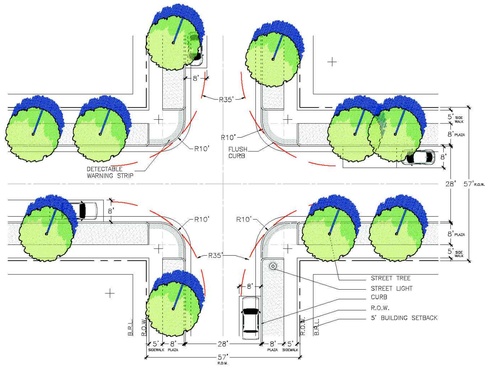

INTERSECTION DIAGRAM
VILLAGE STREET AND
VILLAGE STREET

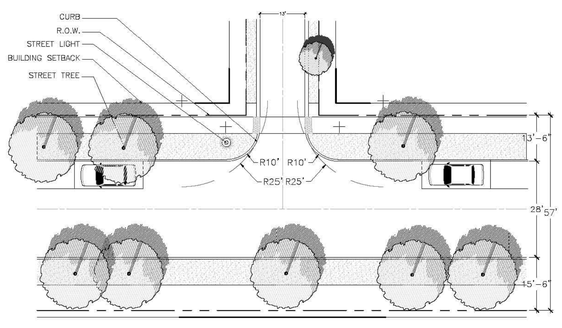

INTERSECTION DIAGRAM
VILLAGE (RESIDENTIAL)
AND ALLEY II

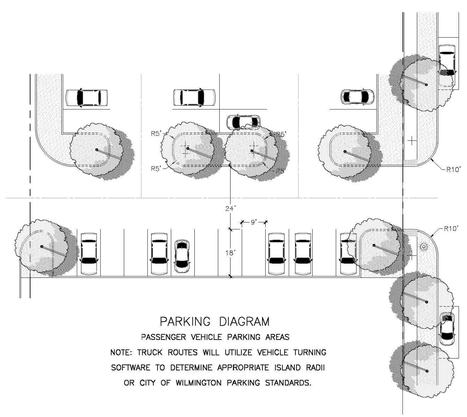

PARKING DIAGRAM

PASSENGER VEHICLE PARKING AREAS

NOTE: TRUCK ROUTES WILL UTILIZE VEHICLE TURNING SOFTWARE TO DETERMINE APPROPRIATE ISLAND RADII OR CITY OF WILMINGTON PARKING STANDARDS.

	PAVEMENT SCHEDULE
C1	2" ASPHALT CONCRETE SURFACE COARSE, TYPE S9.5B AT AN AVERAGE RATE OF 224 LBS. PER SQ. YD.
C2	3" ASPHALT CONCRETE SURFACE COARSE, TYPE S9.5B AT AN AVERAGE RATE OF 336 LBS. PER SQ. YD.
J1	6.0" COMPACTED ABC STONE BASE COURSE
J2	8.0" COMPACTED ABC STONE BASE COURSE
K	6.0" EXTRUDED CURB
L	12.0" RIBBON CURB
U	COMPACTED SUBGRADE

* SEE SHEET CS-501 (14) FOR ADDITIONAL DETAILS AND SECTIONS FOR CURBING, PAVEMENT, STONE, AND SUBGRADE.

ILLUSTRATIVE INTERSECTION DIAGRAMS FROM DEVELOPMENT AGREEMENT

REV.NO.	DESCRIPTIONS	DATE
	REVISIONS	
C	CITY OF WILMINGTON TECHNICAL REVIEW COMMITTEE RE-SUBMITTAL	01/07/2016
B	NEW HANOVER COUNTY EROSION AND SEDIMENT CONTROL RE-SUBMITTAL	01/04/2015
A	CITY OF WILMINGTON TECHNICAL REVIEW COMMITTEE SUBMITTAL	11/10/2015

FINAL DRAWING FOR REVIEW PURPOSES ONLY

SEAL

SEAL

McKIM&CREED
243 North Front Street
Wilmington, North Carolina 28401
Phone: (910)343-1048, Fax: (910)251-8282
License: F-1222
www.mckimcreed.com

NASH — NORTH AMERICA SEKISUI HOUSE, LLC

RIVERLIGHTS by Newland COMMUNITIES

RIVERLIGHTS MARINA VILLAGE
PHASE 1B

ROADWAY SECTIONS

DATE:	10NOV15
MCE PROJ. #	2735-0124
DRAWN	ALM
DESIGNED	NJL
CHECKED	KCBE
PROJ. MGR.	NJL

SCALE
HORIZONTAL: 1"=50'
VERTICAL: N/A

M&C FILE NUMBER CT-301
DRAWING NUMBER 24

STATUS: FINAL DESIGN
NOT FOR CONSTRUCTION
REVISION C

S:\2735\0124 Marina Village\9th Drawings\Phase 1B\CT-301.dwg, 1/14/2016 11:01:19 AM, AMendenhall

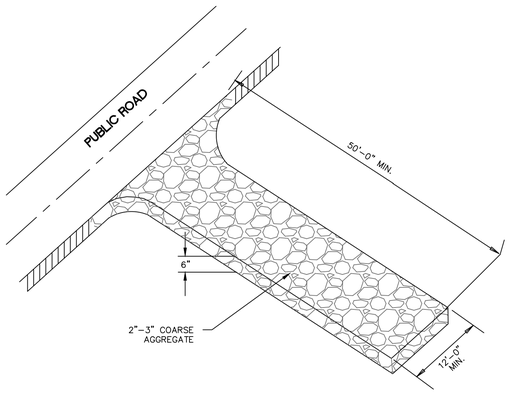

CONSTRUCTION ENTRANCE/EXIT

SD 13-03
NOT TO SCALE

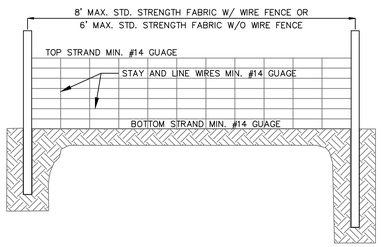

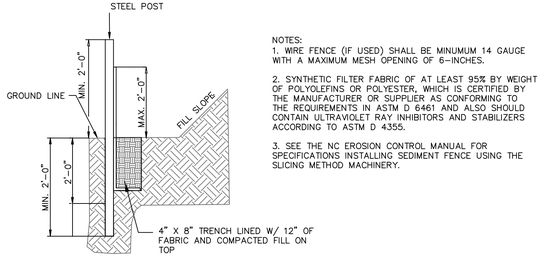

NOTES:
1. WIRE FENCE (IF USED) SHALL BE MINUMUM 14 GAUGE WITH A MAXIMUM MESH OPENING OF 6-INCHES.
2. SYNTHETIC FILTER FABRIC OF AT LEAST 95% BY WEIGHT OF POLYOLEFINS OR POLYESTER, WHICH IS CERTIFIED BY THE MANUFACTURER OR SUPPLIER AS CONFORMING TO THE REQUIREMENTS IN ASTM D 6461 AND ALSO SHOULD CONTAIN ULTRAVIOLET RAY INHIBITORS AND STABILIZERS ACCORDING TO ASTM D 4355.
3. SEE THE NC EROSION CONTROL MANUAL FOR SPECIFICATIONS INSTALLING SEDIMENT FENCE USING THE SLICING METHOD MACHINERY.

TEMPORARY SILT FENCE

NOT TO SCALE

SILT FENCE CALCULATION TABLE

SILT FENCE No.	Sheet Location CE-101	Sheet Location CE-102	Drainage Area SF	Drainage Area ac	Length ft	Acre per 100 ft	0.25 Acre per 100 ft YES/NO
SF 1	X	X	2770	0.06	137.00	0.05	YES
SF 2	X	X	3805	0.09	135.00	0.06	YES
SF 3	X	X	6613	0.15	372.00	0.04	YES
SF 4		X	4942	0.11	226.00	0.05	YES
SF 5	X	X	4553	0.10	141.00	0.07	YES
SF 6	X		1294	0.03	71.00	0.04	YES
SF 7	X	X	21990	0.50	558.00	0.09	YES
SF 8	X		5785	0.13	209.00	0.06	YES
SF 9	X	X	14591	0.33	263.00	0.13	YES
SF 10		X	1563	0.04	133.00	0.03	YES
SF 11	X	X	22675	0.52	304.00	0.17	YES
SF 12		X	6546	0.15	361.00	0.04	YES
SF 13	X	X	1626	0.04	107.00	0.03	YES

Notes:
1. Calculation taken from Table 6.62a of the NCDENR ESC Manual for slopes < 2% only.

NOTE:
THE CRITICAL ROOT ZONE (CRZ) OF A TREE IS WHERE THE MAJORITY OF A TREE'S ROOTS LAY. 85% OF MOST TREE ROOTS ARE FOUND IN THE TOP 24" OF THE SOIL AND SUPPLY THE MAJORITY OF NUTRIENTS AND WATER. GENERALLY, ROOTS SPREAD OUT 2-3X THE HEIGHT OF THE TREE.

NOTE:
CROWN OF THE TREE IS NEEDED FOR LEAF GROWTH TO PRODUCE OXYGEN, FILTER THE AIR, REDUCE WIND AND SOFTEN NOISE. DO NOT DISFIGURE CROWN WITH INTENSIVE PRUNING.

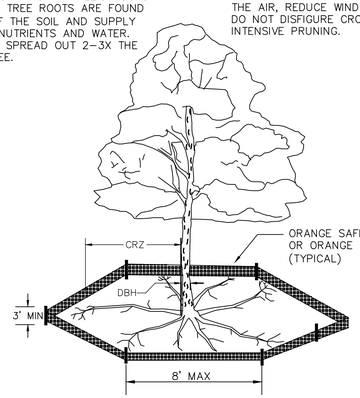

NOTES:
1. PROTECT CRITICAL ROOT ZONE (CRZ) OF TREES PRIOR TO CONSTRUCTION. CLEARLY MARK THE TREES AND ERECT A PROTECTIVE BARRIER AT THE CRZ. BARRIER SHALL BE MAINTAINED UNTIL CONSTRUCTION IS COMPLETE.
2. CRZ RADIUS IS 1 FT PER INCH OF TREE DIAMETER AT BREAST HEIGHT (DBH).
3. IF CONSTRUCTION OCCURS WITHIN THE CRZ, AT LEAST 12" OF MULCH AND/OR LOGGING MATTS SHALL BE PLACED WHERE MACHINERY MANEUVERS TO REDUCE SOIL COMPACTION IN THIS ZONE.
4. WHERE SIDEWALKS AND PATHWAYS PASS WITHIN CRZ, EXTRA CARE SHALL BE TAKEN TO AVOID DAMAGE TO THE ROOTS. ALTERNATE CONSTRUCTION METHODS, SUCH AS A REINFORCED SIDEWALK, SHALL BE IMPLEMENTED AS NECESSARY.
5. FOR ALL TREES, CUTTING OF LARGE STRUCTURAL ROOTS LOCATED NEAR THE BASE OF THE TRUNK IS PROHIBITED. DO NOT COMPACT SOIL BENEATH TREES. NO VEHICLE SHALL BE ALLOWED TO PARKUNDER TREES. NO MATERIALS OR EQUIPMENT SHALL BE STORED BENEATH TREES. DAMAGING THE BARK WITH LAWNMOWERS, CONSTRUCTION EQUIPMENT, OR ANYTHING ELSE IS PROHIBITED. CONTRACTOR SHALL REPAIR DAMAGE TO TREES.
6. FAILING TO INSTALL OR MAINTAIN PROTECTION MEASURES SHALL RESULT IN A STOP WORK ORDER AND FINE OF $500/DAY. DISTURBANCE OTHER THAN THAT ALLOWED ON THE APPROVED PLAN WILL REQUIRE OWNER TO POST A LETTER OF CREDIT FOR 3 YRS FOR TREE MITIGATION.

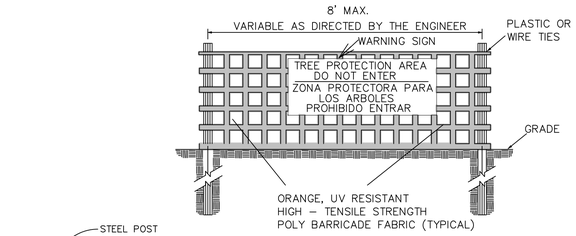

FRONT VIEW

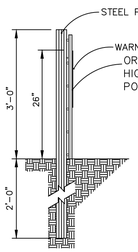

SIDE VIEW

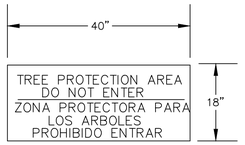

WARNING SIGN DETAIL

NOTES:
1. THE TREE PROTECTION FENCING SHALL NOT BE VIOLATED FOR THE ENTIRE DURATION OF THE PROJECT WITHOUT APPROVAL FROM URBAN FORESTRY STAFF.
2. WARNING SIGNS TO BE MADE OF DURABLE, WEATHERPROOF MATERIAL. LETTERS TO BE 3" HIGH, MINIMUM, CLEARLY LEGIBLE AND SPACED AS DETAILED.
3. SIGNS SHALL BE PLACED AT 50' MAXIMUM INTERVALS. PLACE A SIGN AT EACH END OF LINEAR TREE PROTECTION AND 50' ON CENTER THEREAFTER. FOR TREE PROTECTION AREAS LESS THAN 100' IN PERIMETER, PROVIDE NO LESS THAN TWO SIGNS PER PROTECTION AREA.
4. ATTACH SIGNS SECURELY TO FENCE POSTS AND FABRIC. MAINTAIN TREE PROTECTION FENCE AND SIGNS THROUGHOUT DURATION OF PROJECT.
5. TREE PROTECTION FENCING AND SIGNAGE SHALL BE REMOVED AFTER CONSTRUCTION.
6. ADDITIONAL SIGNS MAY BE REQUIRED BY CITY OF WILMINGTON, BASED ON ACTUAL FIELD CONDITIONS.

METHOD OF TREE PROTECTION DURING CONSTRUCTION

SD 15-09
NOT TO SCALE

SEEDBED PREPARATION:

1. CHISEL COMPACTED AREAS AND SPREAD TOPSOIL 3 INCHES DEEP OVER ADVERSE SOIL CONDITIONS, IF AVAILABLE.
2. RIP THE ENTRANCE AREA TO 6 INCHES DEPTH.
3. REMOVE ALL LOOSE ROCK, ROOTS, AND OTHER OBSTRUCTIONS LEAVING SURFACE REASONABLY SMOOTH AND UNIFORM.
4. APPLY AGRICULTURAL LIME, FERTILIZER, AND SUPERPHOSPHATE UNIFORMLY AND MIX WITH SOIL (SEE BELOW*).
5. CONTINUE TILLAGE UNTIL A WELL - PULVERIZED, FIRM, REASONABLY UNIFORM SEEDBED IS PREPARED 4 TO 6 INCHES DEEP.
6. SEED ON A FRESHLY PREPARED SEEDBED AND COVER SEED LIGHTLY WITH SEEDING EQUIPMENT OR CULTIPACK AFTER SEEDING.
7. MULCH IMMEDIATELY AFTER SEEDING AND ANCHOR MULCH.
8. INSPECT ALL SEEDED AREAS AND MAKE NECESSARY REPAIRS OR RESEEDINGS WITHIN THE PLANTING SEASON, IF POSSIBLE. IF STAND SHOULD BE OVER 60% DAMAGED, REESTABLISH FOLLOWING ORIGINAL LIME, FERTILIZER AND SEEDING RATES.
9. CONSULT CONSERVATION INSPECTOR ON MAINTENANCE TREATMENT AND FERTILIZATION AFTER PERMANENT COVER IS ESTABLISHED.
10. APPLY:
    AGRICULTURAL LIMESTONE - 2 TONS/ACRE
    FERTILIZER - 1000 LBS/ACRE (10-10-10)
    SUPERPHOSPHATE - 500 LBS/ACRE (20%)
    MULCH - 2 TONS/ACRE (SMALL GRAIN STRAW)
    ANCHOR - ASPHALT EMULSION AT 450 GAL/ACRE

TREE PROTECTION NOTES:

1. NO LAND DISTURBANCE INCLUDING TREE REMOVAL IS TO OCCUR OUTSIDE THE LIMITS OF DISTURBANCE SHOWN ON THE PLANS. [18-457(b)]
2. PROTECTIVE FENCING IS TO BE PROPERLY MAINTAINED THROUGHOUT THE DURATION OF THE PROJECT. [18-458]
3. LAND CLEARING AND CONSTRUCTION CONTRACTORS SHALL RECEIVE ADEQUATE INSTRUCTION ON TREE PROTECTION REQUIREMENTS AND METHODS. [18-457(d)]
4. ANY TREES AND/OR AREAS DESIGNATED TO BE PROTECTED MUST PROPERLY BARRICADED WITH FENCING AND PROTECTED THROUGHOUT CONSTRUCTION TO INSURE THAT NO CLEARING AND GRADING OR STAGING OF MATERIALS WILL OCCUR IN THOSE AREAS. [18-458]
5. NO EQUIPMENT IS ALLOWED ON THE SITE UNTIL ALL TREE PROTECTION FENCING AND SILT FENCING HAS BEEN INSTALLED AND APPROVED. [18-458]
6. REGULATED AND SIGNIFICANT TREES IN THE STREET YARD [18-456(c)] AND ANY TREES IN ANY REQUIRED BUFFERS [18-456(b)] ARE REQUIRED TO BE RETAINED.

TEMPORARY SEEDING			
GRASS TYPE	AMOUNT/ 1000 S.F.	TIME OF SEEDING	INITIAL
RYE GRAIN	1-2 LBS.	APRIL - JUNE	25 LBS. 10-10-10
BROWNTOP MILLET	1-2 LBS	JUNE - AUGUST	25 LBS 10-10-10

PERMANENT SEEDING			
GRASS TYPE	AMOUNT/ 1000 S.F.	TIME OF SEEDING	INITIAL
BERMUDA, COMMON	1-2 LBS.	APRIL - JUNE	25 LBS. 10-10-10
FESCUE, TALL (KENTUCKY 31)	5-7 LBS	JUNE - AUGUST FEB. - OCT.	25 LBS 10-10-10
SERICEA LESPEDEZA (SLOPES	1-2 LBS	MARCH - APRIL	25 LBS 10-10-10

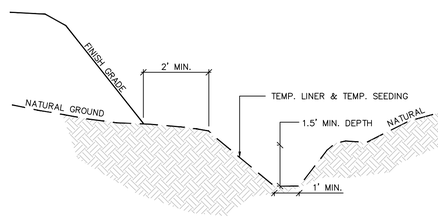

Temporary Perimeter Dike Calculations

									TEMPORARY ROCK CHECK DAMS		
Perm Dike NUMBER	LENGTH (FT)	HIGH (FT)	LOW (FT)	ELEVATION DIFF. (FT)	SLOPE (%)	VELOCITY (FPS)	LINING	Manning n	CHECK DAM SPACING (FT)	NUMBER REQUIRED	NUMBER PROVIDED
1	156	12.53	7.00	5.53	3.54	1.41	GRASS	0.035	56	3	3

TEMPORARY CHANNEL LINER SPECIFICATION:
1. SEE TEMPORARY PERIMETER DIKE CHART FOR LINER TYPE AND CHECK DAM SPACING.
2. MIN. SHEAR STRENGTH: STRAW WITH NET (OR APPROVED EQUAL) - 1.45 LBS/FT²

* ALL RATINGS ABOVE ARE MINIMUM SHEAR STRENGTH REQUIREMENTS FOR THE LINER BASED ON UNVEGETATED CONDITIONS.

CONSTRUCTION SPECIFICATION

1. GRADE THE SURFACE OF INSTALLATION AREAS SO THAT THE GROUND IS SMOOTH AND LOOSE.
2. WHEN SEEDING PRIOR TO INSTALLATION, FOLLOW THE STEPS FOR SEED BED PREPARATION, SOIL AMENDMENTS, AND SEEDING AS NOTED IN "SURFACE STABILIZATION 6.1" (GENERAL NOTES) AND AS PER NCDENR STANDARDS.
3. SPREAD SEED BEFORE TEMPORARY LINER IS INSTALLED.
4. LINER SHALL BE INSTALLED FROM TOP OF BANK TO TOP OF BANK ALONG DIKE WITHIN DENUDED LIMITS.

MAINTENANCE

1. ALL EROSION CONTROL LINING SHALL BE INSPECTED EVERY SEVEN (7) DAYS OR AFTER EACH RAINFALL OCCURRENCE THAT EXCEEDS ONE-HALF (0.5) INCH.

TEMPORARY PERIMETER DIKE

NOT TO SCALE

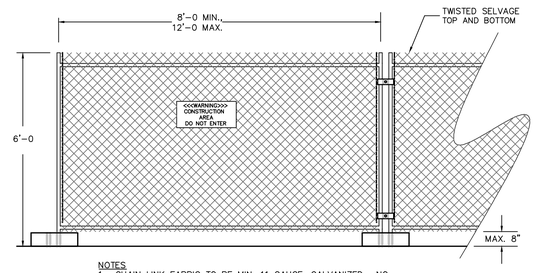

NOTES
1. CHAIN LINK FABRIC TO BE MIN. 11 GAUGE, GALVANIZED. NO RUSTED OR EXCESSIVELY MALFORMED FABRIC.
2. FENCE BASES SHALL BE OF SUFFICIENT WEIGHT and/or SPREAD TO ADEQUATELY SUPPORT EACH PANEL.
3. PANEL-TO-PANEL CONNECTIONS SHALL BE MADE AT A MIN. TWO LOCATIONS PER CONNECTION UNLESS OTHERWSE APPROVED.
4. PROVIDE CONSTRUCTION WARNING SIGNAGE 50'O.C. ALONG FENCING INSTALLATION.

TEMPORARY CONSTRUCTION FENCING

NOT TO SCALE

REV.NO.	DESCRIPTIONS	DATE
	REVISIONS	
C	CITY OF WILMINGTON TECHNICAL REVIEW COMMITTEE RE-SUBMITTAL	01/07/2016
B	NEW HANOVER COUNTY EROSION AND SEDIMENT CONTROL RE-SUBMITTAL	01/04/2015
A	CITY OF WILMINGTON TECHNICAL REVIEW COMMITTEE SUBMITTAL	11/10/2015

SEAL
FINAL DRAWING FOR REVIEW PURPOSES ONLY

SEAL

McKIM&CREED
243 North Front Street
Wilmington, North Carolina 28401
Phone: (910)343-1048, Fax: (910)251-8282
License: F-1222
www.mckimcreed.com

NASH
NORTH AMERICA SEKISUI HOUSE, LLC
RIVERLIGHTS™ by Newland COMMUNITIES

RIVERLIGHTS MARINA VILLAGE PHASE 1B

SEDIMENT & EROSION CONTROL DETAILS

DATE:	10NOV15
MCE PROJ. #	2735-0124
DRAWN	ALM
DESIGNED	NJL
CHECKED	KCBE
PROJ. MGR.	NJL

SCALE
HORIZONTAL: N/A
VERTICAL: N/A

M&C FILE NUMBER CE-501
DRAWING NUMBER 25

STATUS: FINAL DESIGN
NOT FOR CONSTRUCTION
REVISION C

S:\2735\0124 Marina Village\80-Drawings\Phase 1B\CG-503.dwg, 1/14/2016 11:01:33 AM, AMendenhall

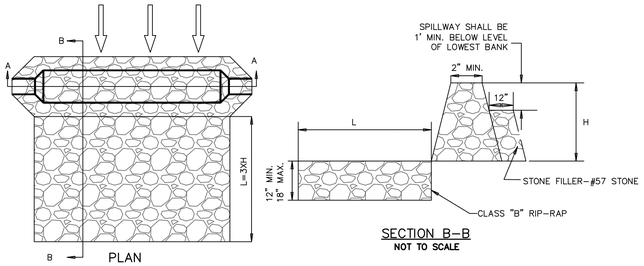

SECTION B–B
NOT TO SCALE

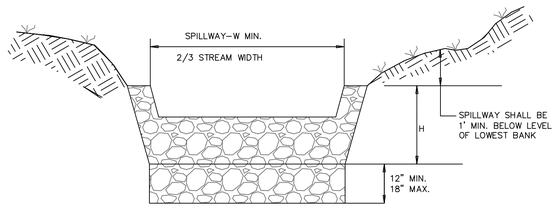

SECTION A–A

DITCH CHECK DAM
SD 13–04
NOT TO SCALE

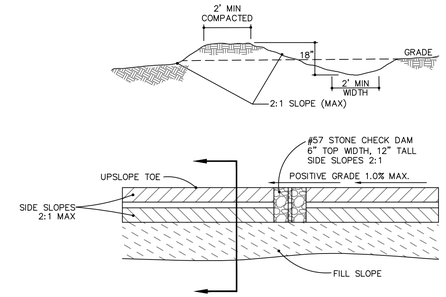

TEMPORARY DIVERSION DITCH
NOT TO SCALE

TEMPORARY DIVERSION DITCH CALCULATION TABLE

TDD NUMBER	DA (AC)	Q 10 (CFS)	LENGTH (FT)	HIGH (FT)	LOW (FT)	ELEVATION DIFF. (FT)	SLOPE (%)	INITIAL LINING	MANNING n	VELOCITY (FPS)	COMMENT
TDD 1	0.25	0.5	158	8.00	4.00	4.00	2.53	BARE EARTH	0.020	2.73	LINING REQ
TTD2	1.23	2.7	231	5.45	4.57	0.88	0.38	BARE EARTH	0.020	2.07	LINING REQ

TDD NUMBER	SECONDARY LINING	MANNING n	VELOCITY (FPS)	COMMENT	DEPTH in	MIN. DEPTH in	*TEMPORARY ROCK CHECK DAMS/WATTLES* CHECK DAM SPACING (FT)	NUMBER REQUIRED	NUMBER PROVIDED
TDD 1	LINING REQ	0.035	1.82	EXCELSIOR OK	2.3	18	79	2	2
TDD2	LINING REQ	0.035	1.36	EXCELSIOR OK	7.9	19	525	0	0

Notes:
1. Q10 taken from Rational Method.
2. Manning n value for bare earth = 0.020 per NC ESC Manual Table 8.05f
3. Manning n value for excelsior (curled wood) matting = 0.035 per NC ESC Manual Table 8.05f
4. Tractive Force (Shear Stress) was also evaluated and found to be sufficient for the proposed lining.

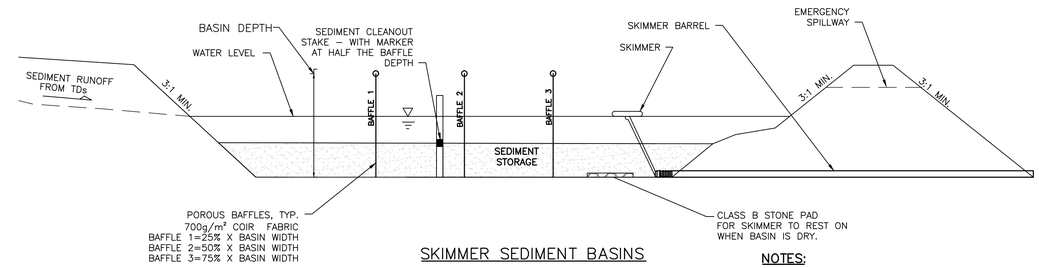

SKIMMER SEDIMENT BASINS

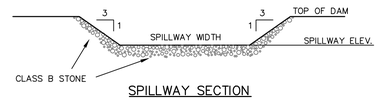

SPILLWAY SECTION

NOTES:
1. BAFFLE MATERIAL SHALL BE MATERIALS SUCH AS 700 G/M COIR EROSION BLANKET OR COIR MESH
2. THE BAFFLE MATERIAL NEEDS TO BE SECURED AT THE BOTTOM AND SIDES USING STAPLES OR BY TRENCHING AS FOR SILT FENCE.
3. LOCATE THE EMERGENCY SPILLWAY ON NATURAL SOILS. AVOID PLACING IT THROUGH FILL MATERIAL WHEREVER POSSIBLE.
4. ALL RUNOFF MUST DISCHARGE TO THE INLET SIDE OF THE BASIN. DISCHARGE RUNOFF INTO THE BASIN IN A MANNER THAT MINIMIZES EROSION.

SKIMMER BASIN CALCULATION TABLE (PHASE 1)

Skimmer No.	Drainage Area ac	Rational C Runoff Coeff.	I10 Intensity in/hr	Q10 Peak Flow cfs		Required SA (325 x Q10) sf	Provided SA sf	Required Vol (1800cf/ac x DA) cf	Provided Vol cf	Storage Depth ft	Storage Vol Drained cf		Weir Width ft
SB-1	3.47	0.30	7.23	7.53		2,446	2,584	6,246	6,920	3.00	6,920		8.0

FAIRCLOTH SKIMMER SIZE CALCULATION (PHASE 1)

Skimmer No.	Dewatering Time (days)	Skimmer Outflow cf/day	Skimmer Size in	Orifice Diameter in	Orifice Radius in	Barrel Outflow gpm	Barrel Pipe in
SB-1	3	2,307	2.0	1.6	0.8	12.0	4.0

Faircloth Skimmer Selection Table

Skimmer Size in	Outflow Qmax cf/day	Head ft
1.5	1,728	0.125
2	3,283	0.167
2.5	6,234	0.208
3	9,774	0.250
4	20,109	0.333
5	32,832	0.333

NOTES:
1. Q10 Peak Flow were taken from Rational Method.
2. Required Surface Areas and Volumes were taken from NCDENR ESC Manual.
3. Faircloth Skimmer Selection Table taken from Table 4-2. NCDOT Level III-A Design of Sediment & Erosion Control Plans Manual
4. Emergency Weir Width taken from Skimmer Basin Criteria Section of NCDENR ESC Manual Table and/or Hydraulic Routing of the basin to ensure non-erosive velocity.
5. Minimum Barrel Pipe on the Skimmer is 4-inches. (On a 1% slope the capacity is 100 GPM)
6. Skimmer Orifice Diameter/Radius were obtained using the Faircloth Skimmer sizing spreadsheet (obtained from their website: http://www.fairclothskimmer.com/skimmer-sizing)

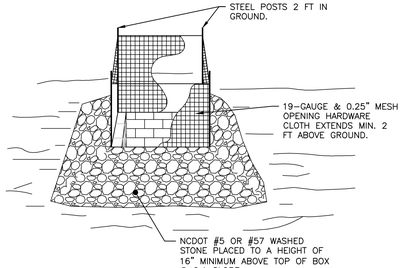

NOTES:
1. DRIVE 5-FOOT STEEL POSTS (1.25 lb/lf steel) 2 FEET INTO THE GROUND SURROUNDING THE INLET. SPACE POSTS EVENLY AROUND THE PERIMETER OF THE INLET, A MAXIMUM OF 4 FEET APART.
2. SURROUND THE POSTS WITH AT LEAST 19-GAUGE HARDWARE CLOTH WITH A 1/4-INCH MESH OPENING. SECURE THE WIRE MESH TO THE STEEL POSTS AT THE TOP, MIDDLE, AND BOTTOM FOR A MIN. 2 FEET ABOVE THE GROUND. PLACING A 2-FOOT FLAP OF THE WIRE MESH UNDER THE GRAVEL FOR ANCHORING AND REMOVAL IS RECOMMENDED.
3. UNIFORMLY GRADE A SHALLOW DEPRESSION APPROACHING THE INLET. THE TOP ELEVATION OF THE STRUCTURE MUST BE AT LEAST 12-INCHES LOWER THAN THE SURROUNDING GROUND ELEVATION DOWNSLOPE FROM THE INLET TO ENSURE THAT STORM FLOWS GET INTO THE INTENDED INLET; UNLESS OTHER SEDIMENT-CONTROL DEVICES ARE INSTALLED TO PREVENT OFF-SITE SEDIMENT-RUNOFF.

TEMP. STORM DRAIN INLET PROTECTION
NOT TO SCALE

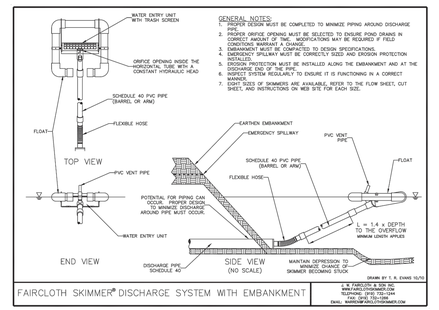

SKIMMER DETAIL WITH EMBANKMENT
NOT TO SCALE

REV.NO.	DESCRIPTIONS	DATE
C	CITY OF WILMINGTON TECHNICAL REVIEW COMMITTEE RE-SUBMITTAL	01/07/2016
B	NEW HANOVER COUNTY EROSION AND SEDIMENT CONTROL RE-SUBMITTAL	01/04/2015
A	CITY OF WILMINGTON TECHNICAL REVIEW COMMITTEE SUBMITTAL	11/10/2015

REVISIONS

SEAL

FINAL DRAWING FOR REVIEW PURPOSES ONLY

SEAL

McKIM&CREED
243 North Front Street
Wilmington, North Carolina 28401
Phone: (910)343-1048, Fax: (910)251-8282
License: F-1222
www.mckimcreed.com

NASH
NORTH AMERICA SEKISUI HOUSE, LLC

RIVERLIGHTS™
by Newland COMMUNITIES

RIVERLIGHTS MARINA VILLAGE PHASE 1B

SEDIMENT & EROSION CONTROL DETAILS

DATE:	10NOV15
MCE PROJ. #	2735-0124
DRAWN	ALM
DESIGNED	NJL
CHECKED	KCBE
PROJ. MGR.	NJL

SCALE
HORIZONTAL: N/A
VERTICAL: N/A

M&C FILE NUMBER CE-502
DRAWING NUMBER 26

STATUS: FINAL DESIGN
NOT FOR CONSTRUCTION
REVISION C

S:\2735\0124 Marina Village\90-Drawings\Phase 1B\CG-503.dwg, 1/14/2016 11:01:34 AM, AMenderhall

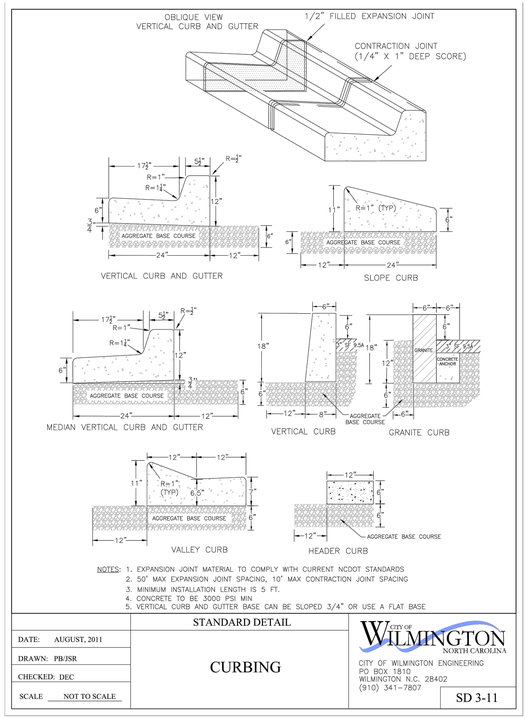

NOTES: 1. EXPANSION JOINT MATERIAL TO COMPLY WITH CURRENT NCDOT STANDARDS
2. 50' MAX EXPANSION JOINT SPACING, 10' MAX CONTRACTION JOINT SPACING
3. MINIMUM INSTALLATION LENGTH IS 5 FT.
4. CONCRETE TO BE 3000 PSI MIN.
5. VERTICAL CURB AND GUTTER BASE CAN BE SLOPED 3/4" OR USE A FLAT BASE

DATE: AUGUST, 2011	STANDARD DETAIL	CITY OF WILMINGTON NORTH CAROLINA CITY OF WILMINGTON ENGINEERING PO BOX 1810 WILMINGTON N.C. 28402 (910) 341-7807
DRAWN: PB/JSR	CURBING	
CHECKED: DEC		
SCALE NOT TO SCALE		SD 3-11

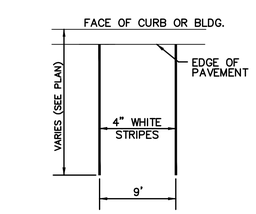

TYPICAL PARKING STALL

NOT TO SCALE

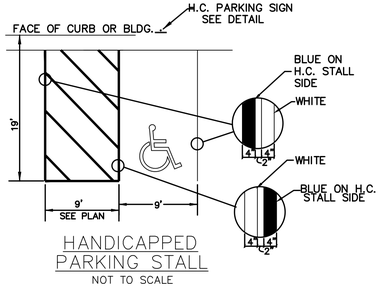

HANDICAPPED PARKING STALL

NOT TO SCALE

GENERAL NOTES

1. IN ACCORDANCE WITH N.C.G.S. 136-44.14, ALL STREET CURBS BEING CONSTRUCTED OR RECONSTRUCTED SHALL PROVIDE WHEELCHAIR RAMPS FOR THE PHYSICALLY HANDICAPPED ON EACH SIDE OF ANY STREET OR ROAD, WHERE CURBS AND SIDEWALKS ARE PROVIDED AND AT OTHER MAJOR POINTS OF PEDESTRIAN FLOW.
2. WHEELCHAIR RAMPS SHALL BE LOCATED AS INDICATED IN DETAIL DRAWINGS; HOWEVER, EXISTING LIGHT POLES, FIRE HYDRANTS, DROP INLETS, ETC. MAY AFFECT PLACEMENT.
3. CURB RAMPS SHALL HAVE DETECTABLE WARNINGS EXTENDING THE FULL WIDTH OF THE RAMP AND A MINIMUM OF 2-FT. IN LENGTH.

CONSTRUCTION NOTES

1. CONSTRUCTION SHALL CONFORM WITH CONSTRUCTION STANDARDS OF THE GOVERNING BODY WHICH HAS JURISDICTION OF THE PARTICULAR STREET.
2. WHEELCHAIR RAMPS SHALL BE CONSTRUCTED OF CLASS "A" CONCRETE WITH THE SURFACE HAVING A ROUGH, NON-SKID TYPE FINISH.
3. A ½-IN. EXPANSION JOINT SHALL BE REQUIRED WHERE THE CONCRETE WHEELCHAIR RAMP JOINS ANY RIGID PAVEMENT OR STRUCTURE.
4. IN NO CASE SHALL THE WIDTH OF A CURB RAMP OR CURB CUT BE LESS THAN 40-IN. (3-FT, 4-IN.), NOT INCLUDING THE FLARED SIDES.
5. TRANSITIONS FROM RAMPS TO WALKS, GUTTERS OR STREETS SHALL BE FLUSH AND FREE OF ABRUPT CHANGES.
6. THE MAXIMUM SLOPE ON THE CURB RAMP RUN IS 1:12.
7. THE MAXIMUM CROSS SLOPE OF THE CURB RAMP IS 1:50.
8. MAXIMUM SLOPES OF ADJOINING GUTTERS, ROAD SURFACE IMMEDIATELY ADJACENT TO THE CURB RAMP, OR ACCESSIBLE ROUTE SHALL NOT EXCEED 1:20.
9. ANY RAISED ISLANDS IN CROSSINGS SHALL BE CUT THROUGH LEVEL WITH THE STREET OR HAVE CURB RAMPS AT BOTH SIDES AND A LEVEL AREA AT LEAST 48-IN. LONG BETWEEN THE CURB RAMPS.
10. DETECTABLE WARNINGS SHALL CONSIST OF RAISED TRUNCATED DOMES WITH A DIAMETER OF NOMINAL 0.9-IN., A HEIGHT OF NOMINAL 0.2-IN. AND A CENTER-TO-CENTER SPACING OF NOMINAL 2.35-IN. AND SHALL CONTRAST VISUALLY WITH ADJOINING SURFACES, EITHER LIGHT-ON-DARK, OR DARK-ON-LIGHT.

ADDITIONAL NOTES

1. STOP BARS SHALL BE USED WHERE IT IS IMPORTANT TO INDICATE THE POINT BEHIND WHICH VEHICLES ARE REQUIRED TO STOP IN COMPLIANCE WITH A TRAFFIC SIGNAL, STOP SIGN OR OTHER LEGAL REQUIREMENT.
2. PARKING SHALL BE ELIMINATED A MINIMUM OF 20 FEET BACK OF THE PEDESTRIAN CROSSWALK.
3. ALL PAVEMENT MARKINGS SHALL BE IN ACCORDANCE WITH THE LATEST EDITION OF THE MANUAL OF UNIFORM TRAFFIC CONTROL DEVICES, PUBLISHED BY THE FEDERAL HIGHWAY ADMINISTRATION. THIS DOCUMENT IS AVAILABLE FROM THE SUPERINTENDENT OF DOCUMENTS, U.S. GOVERNMENT PRINTING OFFICE, WASHINGTON, D.C. 20402.
4. CURB RAMPS AT MARKED CROSSINGS SHALL BE WHOLLY CONTAINED WITHIN THE MARKINGS, EXCLUDING ANY FLARED SIDES.
5. THE BOTTOM OF DIAGONAL (CORNER TYPE) CURB RAMPS AT MARKED CROSSINGS SHALL HAVE 48-IN. MINIMUM CLEAR SPACE WITHIN THE MARKINGS.
6. IF DIAGONAL CURB RAMPS HAVE FLARED SIDES, THEY SHALL HAVE AT LEAST A 24-IN. LONG SEGMENT OF STRAIGHT CURB LOCATED ON EACH SIDE OF THE CURB RAMP AND WITHIN THE MARKED CROSSING.

SD 8-09

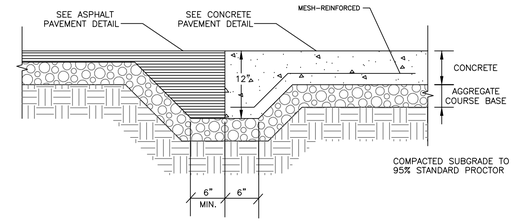

ASPHALT TO CONCRETE TRANSITION

NOT TO SCALE

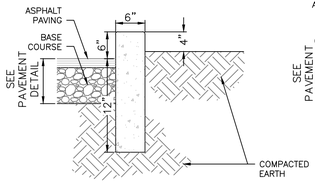

(K) CONCRETE EXTRUDED CURB DETAIL

NOT TO SCALE

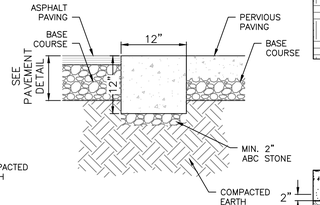

(L) 12" RIBBON CURB DETAIL

NOT TO SCALE

NOTES:

1. CURB TO BE CONSTRUCTED IN 10 FT. LENGTHS.
2. 1/2" EXPANSION JOINTS SHALL BE PROVIDED AT INTERVALS NOT TO EXCEED 50 FEET, AT THE ENDS AND MID-POINT OF RETURNS AND AT ANY OTHER POINT WHERE THE NEW CURB AND GUTTER ABUTS OTHER CONCRETE SURFACES.

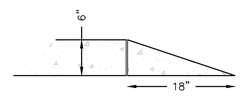

CURB TAPER

NOT TO SCALE

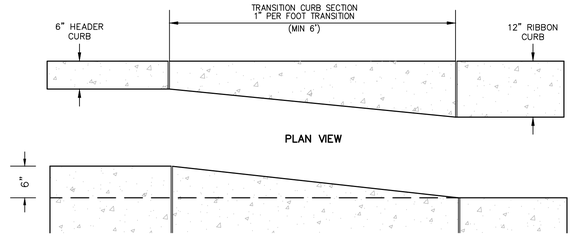

TRANSITION CURB

NOT TO SCALE

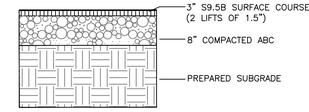

ASPHALT PAVEMENT SECTION (STREET SECTION)

NOT TO SCALE

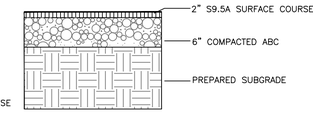

ASPHALT PAVEMENT SECTION (ALLEY/PARKING LOT)

NOT TO SCALE

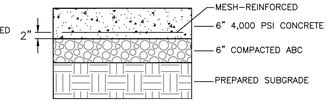

PAVEMENT SHALL BE CONSTRUCTED OF 4,000 PSI CONCRETE. REINFORCEMENT SHALL BE WELDED WIRE FABRIC SPACED 6" O. C. BOTH DIRECTIONS, AS INDICATED BELOW. SURFACE FINISHES AND JOINTS SHALL BE AS INDICATED IN SPECIFICATIONS.

CONCRETE PAVEMENT SECTION (DUMPSTER PAD)

NOT TO SCALE

**** COMPACTED ABC NOTE-1:**
COMPACTED ABC MUST MEET THE NCDOT STANDARD SPECIFICATION GRADATION. REFER TO NCDOT STD SPECS (JAN 2012 EDITION) SECTION 520, AND SECTIONS 1005, 1006, AND 1010 FOR ALL OF THE MATERIAL GRADATION AND SPECIFICATIONS.

GRAVEL PARKING SECTION (PARKING LOT)

NOT TO SCALE

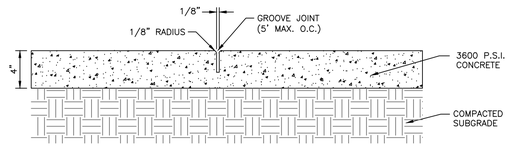

CONCRETE SIDEWALK DETAIL

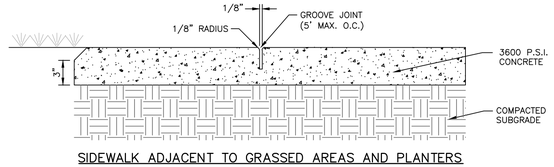

SIDEWALK ADJACENT TO GRASSED AREAS AND PLANTERS

GENERAL NOTES:

1. A GROOVE JOINT 1" DEEP WITH 1/8" RADII SHALL BE REQUIRED IN THE CONCRETE SIDEWALK AT 5' INTERVALS.
2. ONE 1/2" EXPANSION JOINT WILL BE REQUIRED AT 45' INTERVALS.
3. A 1/2" EXPANSION JOINT WILL BE REQUIRED WHERE THE SIDEWALK ABUTS ANY CURB AND GUTTER AND ANY RIGID STRUCTURES.
4. IN SIDEWALKS AND PLAZA AREAS EXPANSION JOINTS ARE REQUIRED AT NO GREATER THAN 30' INTERVALS.
5. CONCRETE SHALL BE 3600 PSI. IN 28 DAYS.

CONCRETE SIDEWALK DETAIL

NOT TO SCALE

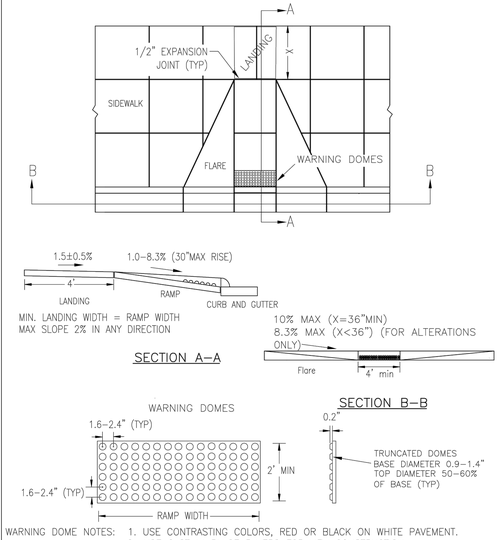

WARNING DOME NOTES: 1. USE CONTRASTING COLORS, RED OR BLACK ON WHITE PAVEMENT.
2. USE CAST IN PLACE PAVERS FOR NEW CONSTRUCTION.
3. RUBBER MATS ARE PERMITTED FOR RETROFITS.
4. LANDING AND RAMP WIDTH MAY BE REDUCED TO 3' WHERE SPACE IS LIMITED AND DESIGN IS APPROVED BY THE CITY ENGINEER.

DATE: DECEMBER, 2010	STANDARD DETAIL	CITY OF WILMINGTON NORTH CAROLINA CITY OF WILMINGTON ENGINEERING PO BOX 1810 WILMINGTON N.C. 28402 (910) 341-7807
DRAWN: PB/JSR	PERPENDICULAR CURB RAMP ADJACENT TO WALKING SURFACE	
CHECKED: DEC		
SCALE NOT TO SCALE		SD 3-07

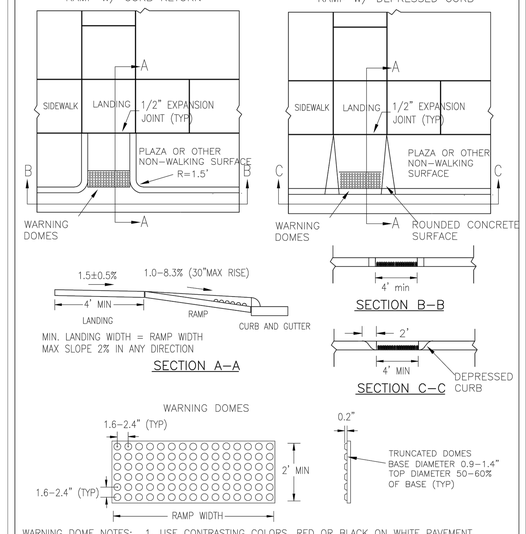

WARNING DOME NOTES: 1. USE CONTRASTING COLORS, RED OR BLACK ON WHITE PAVEMENT.
2. USE CAST IN PLACE PAVERS FOR NEW CONSTRUCTION.
3. RUBBER MATS ARE PERMITTED FOR RETROFITS.
4. LANDING AND RAMP WIDTH MAY BE REDUCED TO 3' WHERE SPACE IS LIMITED AND DESIGN IS APPROVED BY THE CITY ENGINEER.

DATE: DECEMBER, 2010	STANDARD DETAIL	CITY OF WILMINGTON NORTH CAROLINA CITY OF WILMINGTON ENGINEERING PO BOX 1810 WILMINGTON N.C. 28402 (910) 341-7807
DRAWN: PB/JSR	PERPENDICULAR CURB RAMP ADJACENT TO PLAZA	
CHECKED: DEC		
SCALE NOT TO SCALE		SD3-08

REV.NO.	DESCRIPTIONS	DATE
	REVISIONS	
C	CITY OF WILMINGTON TECHNICAL REVIEW COMMITTEE RE-SUBMITTAL	01/07/2016
B	NEW HANOVER COUNTY EROSION AND SEDIMENT CONTROL RE-SUBMITTAL	01/04/2015
A	CITY OF WILMINGTON TECHNICAL REVIEW COMMITTEE SUBMITTAL	11/10/2015

SEAL

FINAL DRAWING FOR REVIEW PURPOSES ONLY

SEAL

McKIM&CREED
243 North Front Street
Wilmington, North Carolina 28401
Phone: (910)343-1048, Fax: (910)251-8282
License: F-1222
www.mckimcreed.com

NASH
NORTH AMERICA SEKISUI HOUSE, LLC

RIVERLIGHTS™
by Newland COMMUNITIES

RIVERLIGHTS MARINA VILLAGE PHASE 1B

SITE DETAILS

DATE:	10NOV15
MCE PROJ. #	2735-0124
DRAWN	ALM
DESIGNED	NJL
CHECKED	KCBE
PROJ. MGR.	NJL

SCALE
HORIZONTAL: N/A
VERTICAL: N/A

M&C FILE NUMBER CS-501
DRAWING NUMBER 27

STATUS: FINAL DESIGN
NOT FOR CONSTRUCTION
REVISION C

S:\27350\124 Marina Village\90-Drawings\Phase 1B\CS-503.dwg, 11/4/2016 11:01:37 AM, AMendenhall

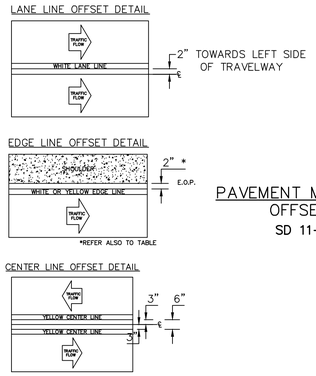

PAVEMENT MARKINGS OFFSETS
SD 11–02

TABLE 1		
EDGE LINE OFFSETS FOR 2–LANE, 2–WAY ROADWAYS WITH UN–PAVED SHOULDERS		
WIDTH OF TRAVEL PAVEMENT	MAX. EDGE LINE OFFSET FROM E. O. P.	MINIMUM LANE WIDTH
16' – 20'	2"	8' – 10'
22'	2"	11'
24'	1'	11'
26'	2'	11'
28'	2'	12'
30'	3'	12'
32'	4'	12'

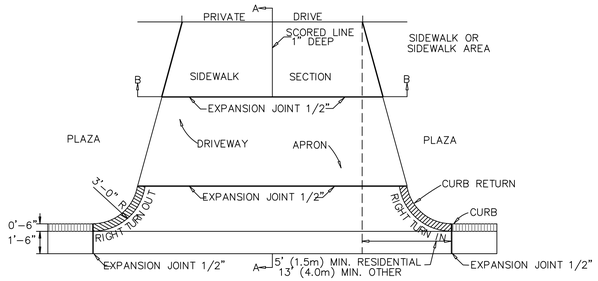

PAVEMENT PLAN

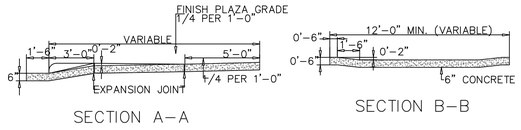

STANDARD DRIVEWAY DETAIL
SD 8–02
NOT TO SCALE

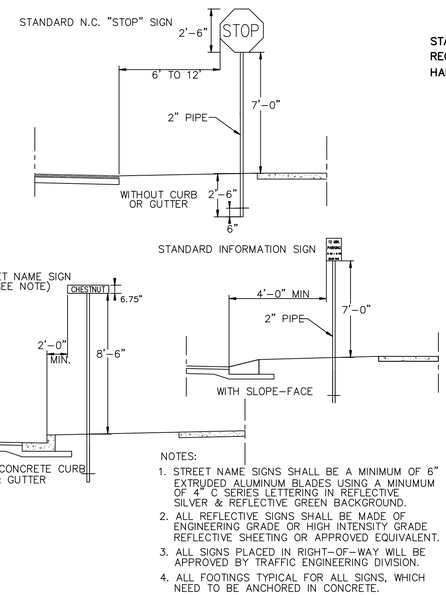

STANDARD SIGN INSTALLATION LOCATION
SD 15–04
NOT TO SCALE

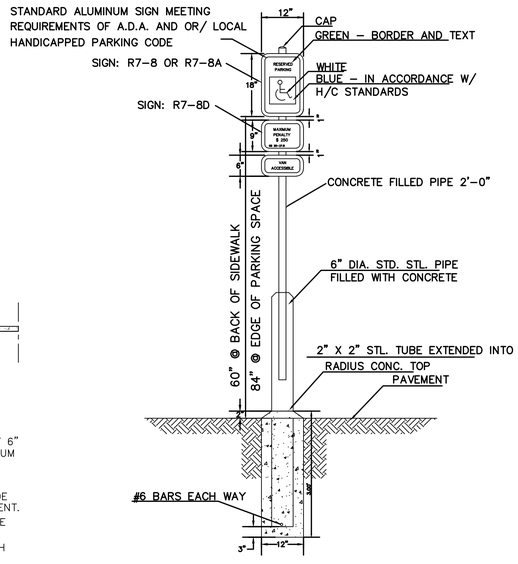

HANDICAP PARKING SIGN
NOT TO SCALE

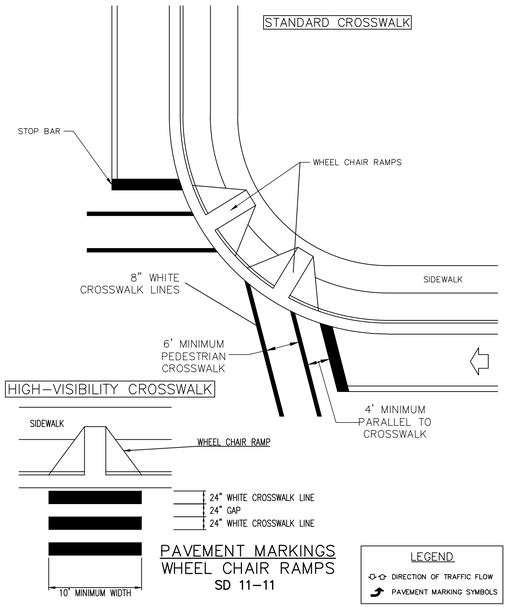

PAVEMENT MARKINGS WHEEL CHAIR RAMPS
SD 11–11

LEGEND
- DIRECTION OF TRAFFIC FLOW
- PAVEMENT MARKING SYMBOLS

PAVEMENT MARKINGS ARROW SYMBOLS
SD 11–03

GENERAL NOTES
- ALL PAVEMENT MARKING SYMBOLS SHALL BE WHITE IN COLOR
- PAVEMENT MARKING SYMBOLS SHALL NOT BE LOCATED AS TO ENCROACH INTO INTERSECTION AREAS.
- ON PORTLAND CEMENT CONCRETE PAVEMENTS, PAVEMENT MARKING SYMBOLS SHALL NOT BE PLACED ACROSS TRANSVERSE EXPANSION JOINTS UNLESS APPROVED BY THE ENGINEER.

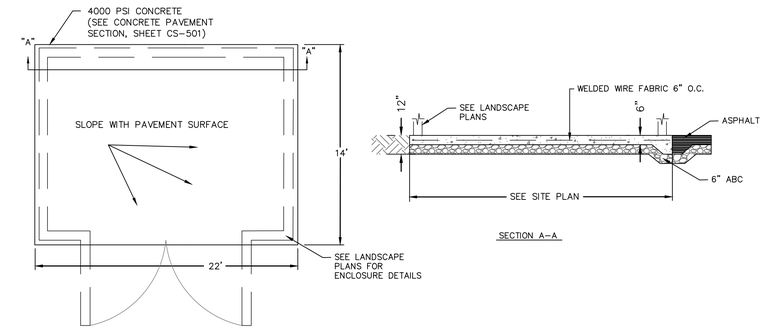

DUMPSTER PAD
NOT TO SCALE

REV.NO.	DESCRIPTIONS	DATE
	REVISIONS	
C	CITY OF WILMINGTON TECHNICAL REVIEW COMMITTEE RE–SUBMITTAL	01/07/2016
B	NEW HANOVER COUNTY EROSION AND SEDIMENT CONTROL RE–SUBMITTAL	01/04/2015
A	CITY OF WILMINGTON TECHNICAL REVIEW COMMITTEE SUBMITTAL	11/10/2015

SEAL

FINAL DRAWING FOR REVIEW PURPOSES ONLY

SEAL

McKIM&CREED
243 North Front Street
Wilmington, North Carolina 28401
Phone: (910)343–1048, Fax: (910)251–8282
License: F–1222
www.mckimcreed.com

NASH
NORTH AMERICA SEKISUI HOUSE, LLC

RIVERLIGHTS™
by Newland COMMUNITIES

RIVERLIGHTS MARINA VILLAGE PHASE 1B

SITE DETAILS

DATE:	10NOV15
MCE PROJ. #	2735–0124
DRAWN	ALM
DESIGNED	NJL
CHECKED	KCBE
PROJ. MGR.	NJL

SCALE
HORIZONTAL: N/A
VERTICAL: N/A

M&C FILE NUMBER: CS–502
DRAWING NUMBER: 28

STATUS: **FINAL DESIGN**
NOT FOR CONSTRUCTION
REVISION: C

S:\2735\0124 Marina Village\80-Drawings\Phase 1B\CG-503.dwg, 1/14/2016 11:01:42 AM, AMendenhall

STATE OF NORTH CAROLINA
DEPT. OF TRANSPORTATION
DIVISION OF HIGHWAYS
RALEIGH, N.C.

1-12

ENGLISH STANDARD DRAWING FOR
CONCRETE CATCH BASIN
12" THRU 54" PIPE

SHEET 1 OF 2
840.02

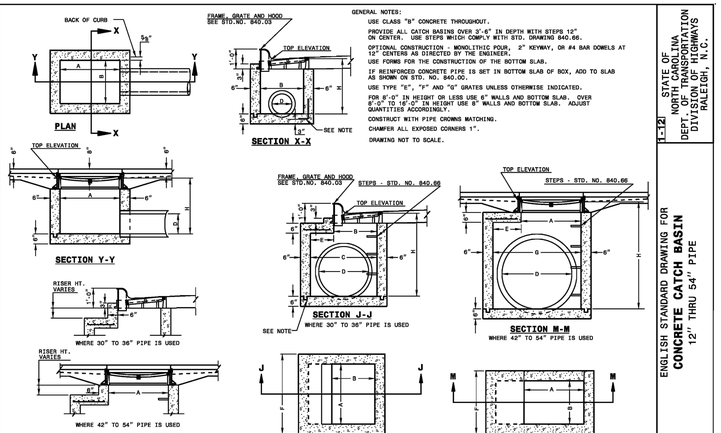

GENERAL NOTES:

USE CLASS "B" CONCRETE THROUGHOUT.

PROVIDE ALL CATCH BASINS OVER 3'-6" IN DEPTH WITH STEPS 12" ON CENTER. USE STEPS WHICH COMPLY WITH STD. DRAWING 840.66.

OPTIONAL CONSTRUCTION - MONOLITHIC POUR, 2" KEYWAY, OR #4 BAR DOWELS AT 12" CENTERS AS DIRECTED BY THE ENGINEER.

USE FORMS FOR THE CONSTRUCTION OF THE BOTTOM SLAB.

IF REINFORCED CONCRETE PIPE IS SET IN BOTTOM SLAB OF BOX, ADD TO SLAB AS SHOWN ON STD. NO. 840.00.

USE TYPE "E", "F" AND "G" GRATES UNLESS OTHERWISE INDICATED.

FOR 9'-0" IN HEIGHT OR LESS USE 6" WALLS AND BOTTOM SLAB. OVER 9'-0" IN HEIGHT USE 8" WALLS AND BOTTOM SLAB. ADJUST QUANTITIES ACCORDINGLY.

CONSTRUCT WITH PIPE CROWNS MATCHING.

CHAMFER ALL EXPOSED CORNERS 1".

DRAWING NOT TO SCALE.

ENGLISH STANDARD DRAWING FOR
CONCRETE CATCH BASIN
12" THRU 54" PIPE

SHEET 1 OF 2
840.02

STATE OF NORTH CAROLINA
DEPT. OF TRANSPORTATION
DIVISION OF HIGHWAYS
RALEIGH, N.C.

1-12

ENGLISH STANDARD DRAWING FOR
CONCRETE CATCH BASIN
12" THRU 54" PIPE

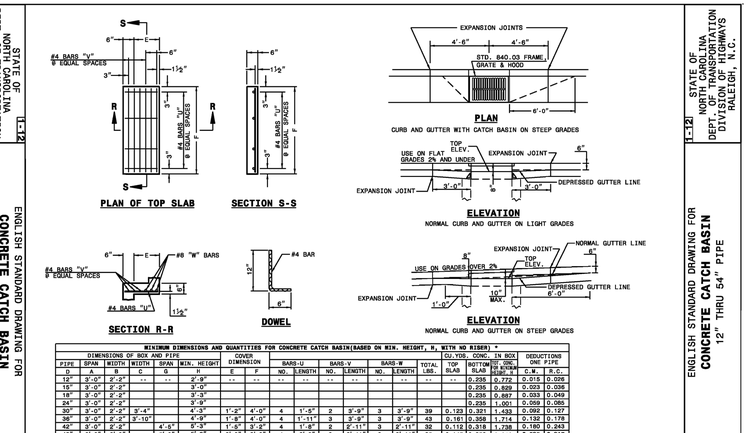

MINIMUM DIMENSIONS AND QUANTITIES FOR CONCRETE CATCH BASIN(BASED ON MIN. HEIGHT, H, WITH NO RISER) *

DIMENSIONS OF BOX AND PIPE						COVER DIMENSION		BARS-U		BARS-V		BARS-W		TOTAL LBS.	CU.YDS. CONC. IN BOX		DEDUCTIONS ONE PIPE	
PIPE DIA.	SPAN A	WIDTH B	WIDTH C	SPAN G	MIN. HEIGHT n	E	F	NO.	LENGTH	NO.	LENGTH	NO.	LENGTH		TOP SLAB	BOTTOM SLAB	ONE END WALL	C.Y.
12"	3'-0"	2'-2"	--	--	2'-9"	--	--	--	--	--	--	--	--	--	0.238	0.772	0.015	0.026
15"	3'-0"	2'-2"			3'-0"										0.235	0.829	0.023	0.036
18"	3'-0"	2'-2"			3'-3"										0.235	0.887	0.033	0.049
24"	3'-0"	2'-2"			3'-9"										0.235	1.001	0.059	0.085
30"	3'-0"	2'-2"	3'-4"		4'-3"	1'-2"	4'-0"	4	1'-5"	2	3'-9"	3	3'-9"	39	0.123	0.321	0.099	0.127
36"	3'-0"	2'-2"	3'-10"		4'-9"	1'-8"	4'-0"	4	1'-11"	3	3'-9"	3	3'-9"	43	0.161	0.358	0.132	0.178
42"	3'-0"	2'-2"		4'-5"	5'-3"	1'-8"	3'-3"	4	1'-8"	2	2'-11"	3	2'-11"	32	0.112	0.318	0.150	0.243
48"	3'-0"	2'-2"		5'-0"	5'-9"	2'-0"	3'-3"	4	2'-3"	3	2'-11"	3	2'-11"	35	0.145	0.352	0.235	0.317
54"	3'-0"	2'-2"		5'-7"	6'-3"	2'-7"	3'-3"	4	2'-10"	3	2'-11"	3	2'-11"	41	0.180	0.388	0.297	0.401

* RISER HAS .228 CUBIC YARDS OF CONCRETE PER FOOT HEIGHT

ENGLISH STANDARD DRAWING FOR
CONCRETE CATCH BASIN
12" THRU 54" PIPE

SHEET 2 OF 2
840.02

STATE OF NORTH CAROLINA
DEPT. OF TRANSPORTATION
DIVISION OF HIGHWAYS
RALEIGH, N.C.

1-12

ENGLISH STANDARD DRAWING FOR
TRAFFIC BEARING PRECAST DRAINAGE STRUCTURE

SHEET 1 OF 1
840.46

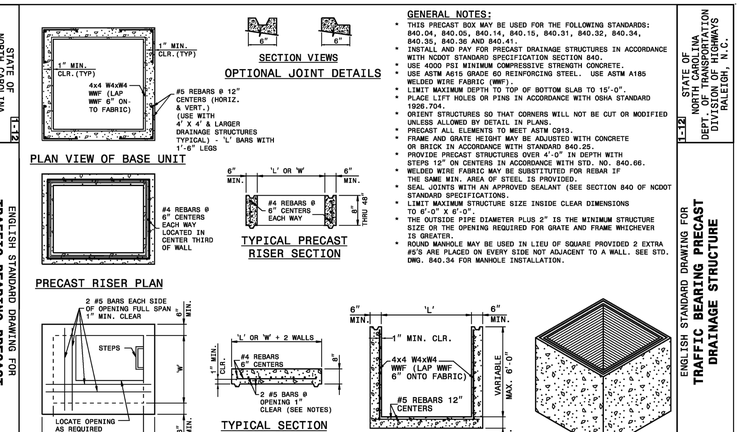

GENERAL NOTES:

- THIS PRECAST BOX MAY BE USED FOR THE FOLLOWING STANDARDS: 840.04, 840.06, 840.14, 840.15, 840.31, 840.32, 840.34, 840.35, 840.36 AND 840.41.
- INSTALL AND PAY FOR PRECAST DRAINAGE STRUCTURES IN ACCORDANCE WITH NCDOT STANDARD SPECIFICATION SECTION 840.
- USE 4000 PSI MINIMUM COMPRESSIVE STRENGTH CONCRETE.
- USE ASTM A615 GRADE 60 REINFORCING STEEL. USE ASTM A185 WELDED WIRE FABRIC (WWF).
- LIMIT MAXIMUM DEPTH TO TOP OF BOTTOM SLAB TO 15'-0".
- PLACE LIFT HOLES OR PINS IN ACCORDANCE WITH OSHA STANDARD 1926.704.
- ORIENT STRUCTURES SO THAT CORNERS WILL NOT BE CUT OR MODIFIED UNLESS ALLOWED BY DETAIL IN PLANS.
- PRECAST ALL ELEMENTS TO MEET ASTM C913.
- FRAME AND GRATE HEIGHT MAY BE ADJUSTED WITH CONCRETE OR BRICK IN ACCORDANCE WITH STANDARD 840.25.
- PROVIDE PRECAST STRUCTURES OVER 4'-0" IN DEPTH WITH STEPS 12" ON CENTERS IN ACCORDANCE WITH STD. NO. 840.66.
- WELDED WIRE FABRIC MAY BE SUBSTITUTED FOR REBAR IF THE SAME MIN. AREA OF STEEL IS PROVIDED.
- SEAL JOINTS WITH AN APPROVED SEALANT (SEE SECTION 840 OF NCDOT STANDARD SPECIFICATIONS.
- LIMIT MAXIMUM STRUCTURE SIZE INSIDE CLEAR DIMENSIONS TO 6'-0" X 6'-0".
- THE OUTSIDE PIPE DIAMETER PLUS 2" IS THE MINIMUM STRUCTURE SIZE OR THE OPENING REQUIRED FOR GRATE AND FRAME WHICHEVER IS GREATER.
- ROUND MANHOLE MAY BE USED IN LIEU OF SQUARE PROVIDED 2 EXTRA #5'S ARE PLACED ON EVERY SIDE NOT ADJACENT TO A WALL. SEE STD. DWG. 840.34 FOR MANHOLE INSTALLATION.

ENGLISH STANDARD DRAWING FOR
TRAFFIC BEARING PRECAST DRAINAGE STRUCTURE

SHEET 1 OF 1
840.46

STATE OF NORTH CAROLINA
DEPT. OF TRANSPORTATION
DIVISION OF HIGHWAYS
RALEIGH, N.C.

1-12

ENGLISH STANDARD DRAWING FOR
FRAME, GRATES AND HOOD
FOR USE ON STANDARD CATCH BASIN

SHEET 1 OF 2
840.03

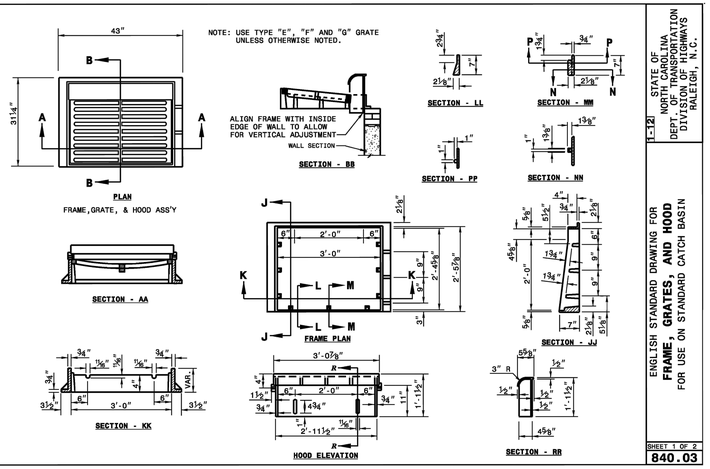

ENGLISH STANDARD DRAWING FOR
FRAME, GRATES AND HOOD
FOR USE ON STANDARD CATCH BASIN

SHEET 1 OF 2
840.03

STATE OF NORTH CAROLINA
DEPT. OF TRANSPORTATION
DIVISION OF HIGHWAYS
RALEIGH, N.C.

1-12

ENGLISH STANDARD DRAWING FOR
FRAME, GRATES AND HOOD
FOR USE ON STANDARD CATCH BASIN

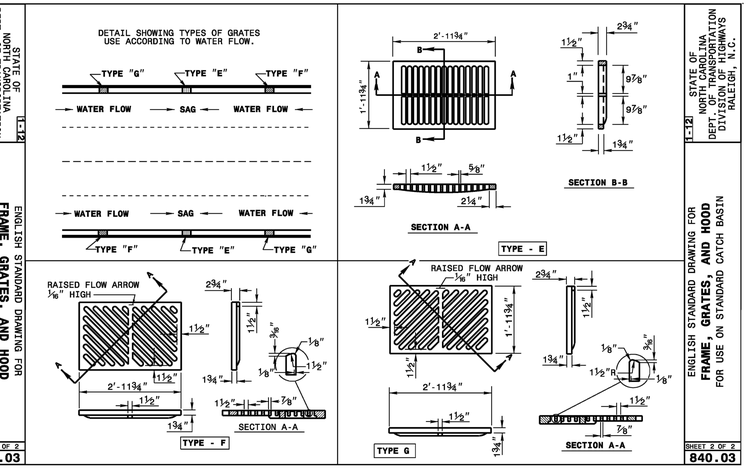

ENGLISH STANDARD DRAWING FOR
FRAME, GRATES AND HOOD
FOR USE ON STANDARD CATCH BASIN

SHEET 2 OF 2
840.03

STATE OF NORTH CAROLINA
DEPT. OF TRANSPORTATION
DIVISION OF HIGHWAYS
RALEIGH, N.C.

1-12

ENGLISH STANDARD DRAWING FOR
MEDIAN CURB FOR CATCH BASIN
(FOR USE WITH 1'-6" CURB AND GUTTER)

SHEET 1 OF 1
852.05

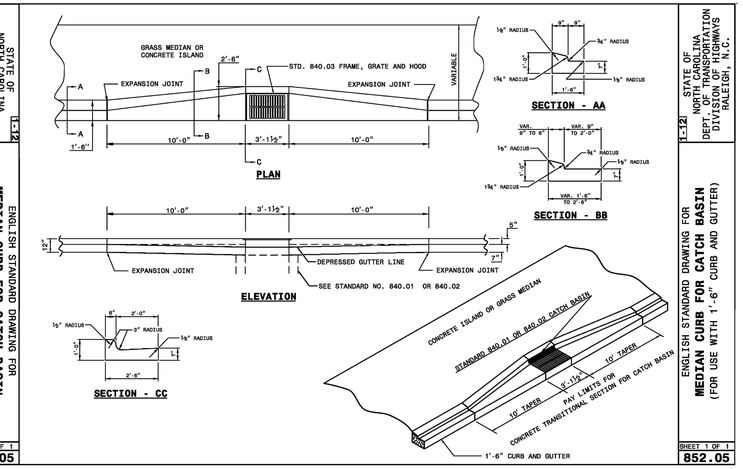

ENGLISH STANDARD DRAWING FOR
MEDIAN CURB FOR CATCH BASIN
(FOR USE WITH 1'-6" CURB AND GUTTER)

SHEET 1 OF 1
852.05

STATE OF NORTH CAROLINA
DEPT. OF TRANSPORTATION
DIVISION OF HIGHWAYS
RALEIGH, N.C.

1-12

ENGLISH STANDARD DRAWING FOR
PRECAST CONCRETE ENDWALL
FOR SINGLE 12" THRU 72" PIPE - 90° SKEW

SHEET 1 OF 1
838.80

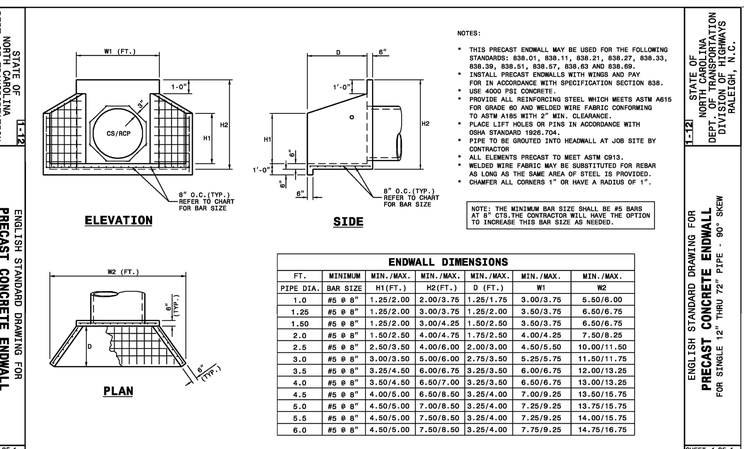

NOTES:

- THIS PRECAST ENDWALL MAY BE USED FOR THE FOLLOWING STANDARDS: 838.01, 838.11, 838.21, 838.27, 838.33, 838.39, 838.51, 838.57, 838.63 AND 838.69.
- INSTALL PRECAST ENDWALLS WITH WINGS AND PAY FOR IN ACCORDANCE WITH SPECIFICATION SECTION 838.
- USE 4000 PSI CONCRETE.
- PROVIDE ALL REINFORCING STEEL WHICH MEETS ASTM A615 FOR GRADE 60 AND WELDED WIRE FABRIC CONFORMING TO ASTM A185 WITH 2" MIN. CLEARANCE.
- PLACE LIFT HOLES OR PINS IN ACCORDANCE WITH OSHA STANDARD 1926.704.
- PIPE TO BE GROUTED INTO HEADWALL AT JOB SITE BY CONTRACTOR
- ALL ELEMENTS PRECAST TO MEET ASTM C913.
- WELDED WIRE FABRIC MAY BE SUBSTITUTED FOR REBAR AS LONG AS THE SAME AREA OF STEEL IS PROVIDED.
- CHAMFER ALL CORNERS 1" OR HAVE A RADIUS OF 1".

NOTE: THE MINIMUM BAR SIZE SHALL BE #5 BARS AT 8" CTS.THE CONTRACTOR WILL HAVE THE OPTION TO INCREASE THIS BAR SIZE AS NEEDED.

ENDWALL DIMENSIONS

FT.	MINIMUM	MIN./MAX.	MIN./MAX.	MIN./MAX.	MIN./MAX.	MIN./MAX.
PIPE DIA.	BAR SIZE	H1(FT.)	H2(FT.)	D (FT.)	W1	W2
1.0	#5 @ 8"	1.25/2.00	2.00/3.75	1.25/1.75	3.00/3.75	5.50/6.00
1.25	#5 @ 8"	1.25/2.00	3.00/3.75	1.25/2.00	3.50/3.75	6.50/6.75
1.50	#5 @ 8"	1.25/2.00	3.00/4.25	1.50/2.50	3.50/3.75	6.50/6.75
2.0	#5 @ 8"	1.50/2.50	4.00/4.75	1.75/2.50	4.00/4.25	7.50/8.25
2.5	#5 @ 8"	2.50/3.50	4.00/6.00	2.00/3.00	4.50/5.50	10.00/11.50
3.0	#5 @ 8"	3.00/3.50	5.00/6.00	2.75/3.50	5.25/5.75	11.50/11.75
3.5	#5 @ 8"	3.25/4.50	6.00/6.75	3.25/3.50	6.00/6.75	12.00/13.25
4.0	#5 @ 8"	3.50/4.50	6.50/7.00	3.25/3.50	6.50/6.75	13.00/13.25
4.5	#5 @ 8"	4.00/5.00	6.50/8.50	3.25/4.00	7.00/9.25	13.50/15.75
5.0	#5 @ 8"	4.50/5.00	7.00/8.50	3.25/4.00	7.25/9.25	13.75/15.75
5.5	#5 @ 8"	4.50/5.00	7.50/8.50	3.25/4.00	7.25/9.25	14.00/15.75
6.0	#5 @ 8"	4.50/5.00	7.50/8.50	3.25/4.00	7.75/9.25	14.75/16.75

ENGLISH STANDARD DRAWING FOR
PRECAST CONCRETE ENDWALL
FOR SINGLE 12" THRU 72" PIPE - 90° SKEW

SHEET 1 OF 1
838.80

STATE OF NORTH CAROLINA
DEPT. OF TRANSPORTATION
DIVISION OF HIGHWAYS
RALEIGH, N.C.

1-12

ENGLISH STANDARD DRAWING FOR
DRAINAGE STRUCTURE STEPS

SHEET 1 OF 1
840.66

NOTES:
INSTALL ALL STEPS PROTRUDING 4" FROM INSIDE FACE OF STRUCTURE WALL.
STEPS DIFFERING IN DIMENSIONS, CONFIGURATION, OR MATERIALS FROM THOSE SHOWN MAY ALSO BE USED PROVIDED THE CONTRACTOR HAS FURNISHED THE ENGINEER WITH DETAILS OF THE PROPOSED STEPS AND HAS RECEIVED WRITTEN APPROVAL FROM THE ENGINEER FOR THE USE OF SUCH STEPS.

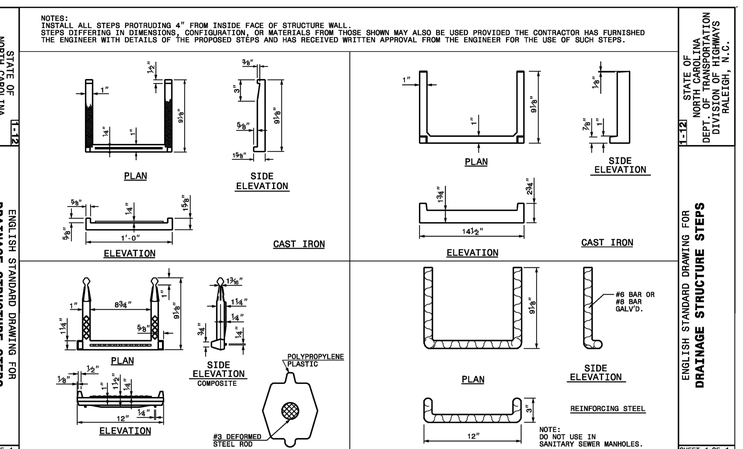

ENGLISH STANDARD DRAWING FOR
DRAINAGE STRUCTURE STEPS

SHEET 1 OF 1
840.66

REV.NO.	DESCRIPTIONS	DATE
	REVISIONS	
C	CITY OF WILMINGTON TECHNICAL REVIEW COMMITTEE RE-SUBMITTAL	01/07/2016
B	NEW HANOVER COUNTY EROSION AND SEDIMENT CONTROL RE-SUBMITTAL	01/04/2015
A	CITY OF WILMINGTON TECHNICAL REVIEW COMMITTEE SUBMITTAL	11/10/2015

SEAL

FINAL DRAWING FOR REVIEW PURPOSES ONLY

SEAL

McKIM & CREED
243 North Front Street
Wilmington, North Carolina 28401
Phone: (910)343-1048, Fax: (910)251-8282
License: F-1222
www.mckimcreed.com

NASH
NORTH AMERICA SEKISUI HOUSE, LLC

RIVERLIGHTS™
by Newland COMMUNITIES

RIVERLIGHTS MARINA VILLAGE PHASE 1B

STORMWATER DRAINAGE DETAILS

DATE:	10NOV15
MCE PROJ. #	2735-0124
DRAWN	ALM
DESIGNED	NJL
CHECKED	KCBE
PROJ. MGR.	NJL

SCALE
HORIZONTAL: N/A
VERTICAL: N/A

M&C FILE NUMBER
CG-501
DRAWING NUMBER
29

STATUS: **FINAL DESIGN**
NOT FOR CONSTRUCTION

REVISION
C

S:\2735\0124 Marina Village\80-Drawings\Phase 1B\CG-503.dwg, 1/14/2016 11:01:46 AM, AAhendenhall

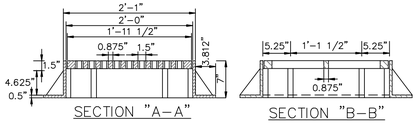

SECTION "A–A" SECTION "B–B"

MINIMUM AVERAGE WEIGHT
FRAME 195 LBS.
GRATE 145 LBS.

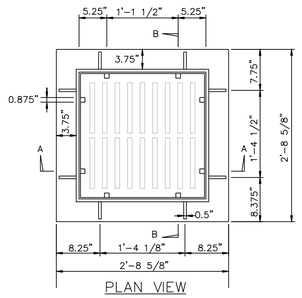

PLAN VIEW

GRILL BASIN CASTINGS
SD 14–04
NOT TO SCALE

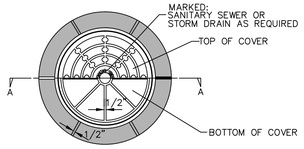

PLAN

NOTE:
RING & COVER CONTACT SURFACES SHALL BE MACHINED SO AS TO INSURE EVEN BEARING OF COVER ON RING

MINIMUM WEIGHTS:
RING 190 LBS.
COVER 120 LBS.

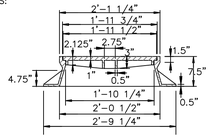

SECTION "A–A"

STANDARD MANHOLE RING AND COVER
SD 14–01
NOT TO SCALE

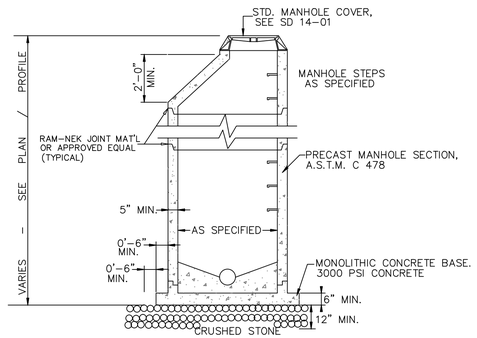

NOTE:
EXTENDED BASE MAY NOT BE REQUIRED WHERE MANHOLES ARE GREATER THAN 4 FEET INSIDE DIAMETER

PRECAST MANHOLE
SD 14–11
NOT TO SCALE

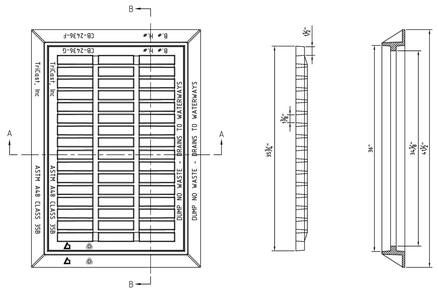

24"x36" CASTING (2DI)
NOT TO SCALE

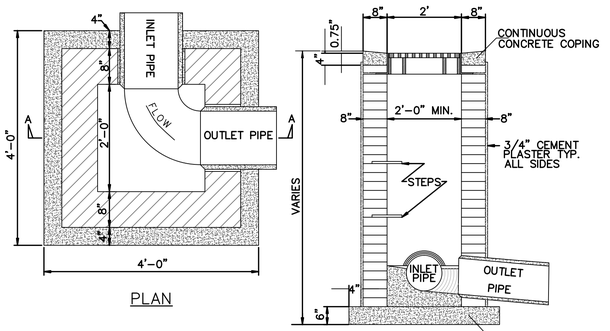

NOTE:
FRAME AND GRATE TO BE STANDARD CITY OF WILMINGTON CAST IRON FRAME AND GRATE PER SD 14–04

GRILL BASIN
SD 2–02
NOT TO SCALE

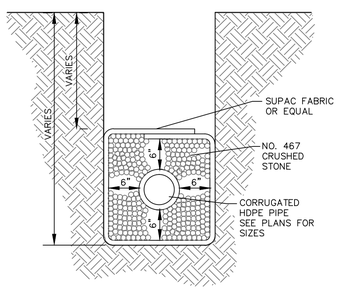

TYPICAL SECTION

GUIDELINES FOR SUB–DRAIN
SD 2–04
NOT TO SCALE

STATE OF NORTH CAROLINA
DEPT. OF TRANSPORTATION
DIVISION OF HIGHWAYS
RALEIGH, N.C.

1-12

ENGLISH STANDARD DRAWING FOR
TRAFFIC BEARING GRATED DROP INLET
FOR CAST IRON DOUBLE FRAME AND GRATES

SHEET 1 OF 2
840.35

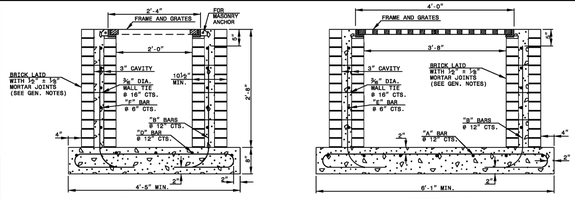

SECTION X-X SECTION Y-Y

BRICK ALT.

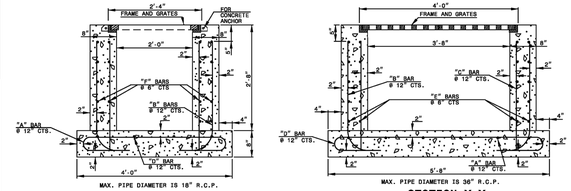

SECTION X-X **CONCRETE ALT.** SECTION Y-Y

NOTES:
-HORIZONTAL AND VERTICAL DIMENSIONS MAY BE ADJUSTED AS THE FIELD CONDITIONS AND/OR ALTERNATE DESIGN REQUIRE.
-MAXIMUM HEIGHT FOR THIS STRUCTURE IS 14'-0".
-MAKE ALL ADJUSTMENTS AS DIRECTED BY THE ENGINEER.
-DEPTH OF STEEL GRATE WILL REQUIRE DEEPER SEAT ALONG SHORT WALLS.

STATE OF NORTH CAROLINA
DEPT. OF TRANSPORTATION
DIVISION OF HIGHWAYS
RALEIGH, N.C.

1-12

ENGLISH STANDARD DRAWING FOR
TRAFFIC BEARING GRATED DROP INLET
FOR CAST IRON DOUBLE FRAME AND GRATES

SHEET 2 OF 2
840.35

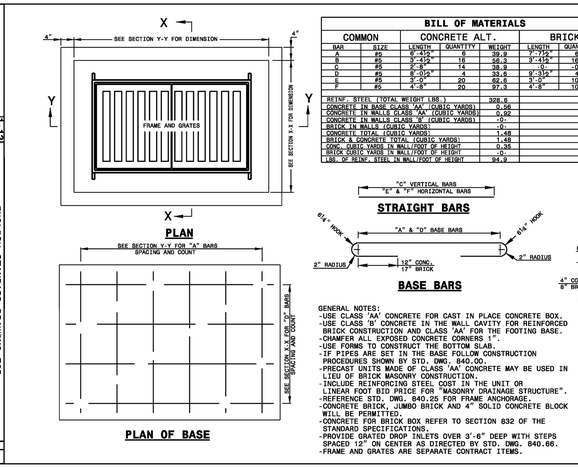

BILL OF MATERIALS

	COMMON	CONCRETE ALT.			BRICK ALT.		
BAR	SIZE	LENGTH	QUANTITY	WEIGHT	LENGTH	QUANTITY	WEIGHT
A	#5	6'-4⅝"	8	39.9	7'-7⅛"	8	47.7
B	#5	5'-4⅝"	10	52.3	5'-4⅝"	10	56.3
C	#5	2'-8"	14	38.9	-0-	-0-	-0-
D	#5	8'-0⅝"	5	33.5	9'-3⅝"	4	38.8
E	#5	3'-0"	20	62.8	3'-0"	10	31.3
F	#5	4'-8"	30	97.0	4'-8"	10	48.7
REINF. STEEL (TOTAL WEIGHT LBS.)				328.8			222.8
CONCRETE IN BASE CLASS 'AA' (CUBIC YARDS)				0.56			0.56
CONCRETE IN WALLS CLASS 'AA' (CUBIC YARDS)				0.92			-0-
CONCRETE IN WALLS CLASS 'B' (CUBIC YARDS)				-0-			0.36
BRICK IN WALLS (CUBIC YARDS)				-0-			0.91
CONCRETE TOTAL (CUBIC YARDS)				1.48			1.03
BRICK & CONCRETE TOTAL (CUBIC YARDS)				1.48			1.93
CONC. CUBIC YARDS IN WALL/FOOT OF HEIGHT				0.05			0.14
BRICK CUBIC YARDS IN WALL/FOOT OF HEIGHT				-0-			0.34
LBS. OF REINF. STEEL IN WALL/FOOT OF HEIGHT				84.9			47.6

GENERAL NOTES:
-USE CLASS 'AA' CONCRETE FOR CAST IN PLACE CONCRETE BOX.
-USE CLASS 'B' CONCRETE IN THE WALL CAVITY FOR REINFORCED BRICK CONSTRUCTION AND CLASS 'AA' FOR THE FOOTING BASE.
-CHAMFER ALL EXPOSED CONCRETE CORNERS 1".
-USE FORMS TO CONSTRUCT THE BOTTOM SLAB.
-IF PIPES ARE SET IN THE BASE FOLLOW CONSTRUCTION PROCEDURES SHOWN BY STD. DWG. 840.00.
-PRECAST UNITS MADE OF CLASS 'AA' CONCRETE MAY BE USED IN LIEU OF BRICK MASONRY CONSTRUCTION.
-INCLUDE REINFORCING STEEL COST IN THE UNIT OR LINEAR FOOT BID PRICE FOR "MASONRY DRAINAGE STRUCTURE".
-REFERENCE STD. DWG. 840.25 FOR FRAME ANCHORAGE.
-CONCRETE BRICK, JUMBO BRICK AND 4" SOLID CONCRETE BLOCK WILL BE PERMITTED.
-CONCRETE FOR BRICK BOX REFER TO SECTION 832 OF THE STANDARD SPECIFICATIONS.
-PROVIDE GRATED DROP INLETS OVER 3'-6" DEEP WITH STEPS SPACED 12" ON CENTER AS DIRECTED BY STD. DWG. 840.66.
-FRAME AND GRATES ARE SEPARATE CONTRACT ITEMS.

STATE OF NORTH CAROLINA
DEPT. OF TRANSPORTATION
DIVISION OF HIGHWAYS
RALEIGH, N.C.

1-12

ENGLISH STANDARD DRAWING FOR
TRAFFIC BEARING GRATED DROP INLET
FOR CAST IRON DOUBLE FRAME AND GRATES

SHEET 2 OF 2
840.35

STATE OF NORTH CAROLINA
DEPT. OF TRANSPORTATION
DIVISION OF HIGHWAYS
RALEIGH, N.C.

1-12

ENGLISH STANDARD DRAWING FOR
ANCHORAGE FOR FRAMES
BRICK/CONCRETE/PRECAST CONCRETE

SHEET 1 OF 1
840.25

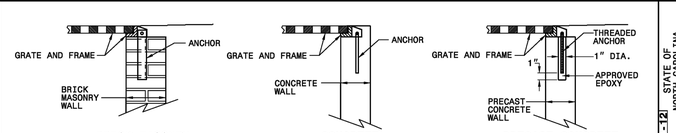

BRICK MASONRY CONSTRUCTION **CONCRETE CONSTRUCTION** **PRECAST CONCRETE CONSTRUCTION**

DETAIL SHOWING ANCHORAGE OF FRAME FOR GRATED DROP INLET

NOTE:
CONSTRUCT GRATED DROP INLET TO COINCIDE WITH NORMAL OR SUPERELEVATED SHOULDER OR PAVEMENT SLOPE.

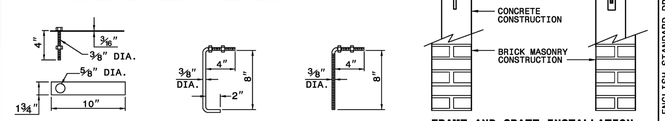

MASONRY ANCHOR ⅜" DIA. BOLT WITH PLATE

CONCRETE ANCHOR ⅜" DIA. BENT BAR

PRECAST CONCRETE ANCHOR ⅜" DIA. BENT BAR

FRAME AND GRATE INSTALLATION FOR NORMAL CROWN AND SUPERELEVATED SECTIONS

STATE OF NORTH CAROLINA
DEPT. OF TRANSPORTATION
DIVISION OF HIGHWAYS
RALEIGH, N.C.

1-12

ENGLISH STANDARD DRAWING FOR
ANCHORAGE FOR FRAMES
BRICK/CONCRETE/PRECAST CONCRETE

SHEET 1 OF 1
840.25

REV.NO.	DESCRIPTIONS REVISIONS	DATE
C	CITY OF WILMINGTON TECHNICAL REVIEW COMMITTEE RE-SUBMITTAL	01/07/2016
B	NEW HANOVER COUNTY EROSION AND SEDIMENT CONTROL RE-SUBMITTAL	01/04/2015
A	CITY OF WILMINGTON TECHNICAL REVIEW COMMITTEE SUBMITTAL	11/10/2015

SEAL

FINAL DRAWING FOR REVIEW PURPOSES ONLY

SEAL

McKIM&CREED
243 North Front Street
Wilmington, North Carolina 28401
Phone: (910)343-1048, Fax: (910)251-8282
License: F-1222
www.mckimcreed.com

NASH
NORTH AMERICA SEKISUI HOUSE, LLC

RIVERLIGHTS™
by Newland COMMUNITIES

RIVERLIGHTS MARINA VILLAGE PHASE 1B

STORMWATER DRAINAGE DETAILS

DATE:	10NOV15
MCE PROJ. #	2735-0124
DRAWN	ALM
DESIGNED	NJL
CHECKED	KCBE
PROJ. MGR.	NJL

SCALE
HORIZONTAL: N/A
VERTICAL: N/A

M&C FILE NUMBER
CG-502
DRAWING NUMBER
30

STATUS: **FINAL DESIGN**
NOT FOR CONSTRUCTION

REVISION
C

S:\2735\0124 Marina Village\80\Drawings\Phase 1B\CG-503.dwg, 1/14/2016 11:02:00 AM, AMendenhall

1201DI

APPROX. DRAIN AREA = 39.75 SQ IN
APPROX. WEIGHT = 15 LBS

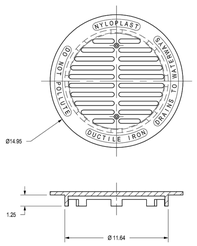

DIMENSIONS ARE FOR REFERENCE ONLY
ACTUAL DIMENSIONS MAY VARY
DIMENSIONS ARE IN INCHES
GRATE HAS LIGHT DUTY RATING
QUALITY: MATERIALS SHALL CONFORM TO ASTM A536 GRADE 70-50-05
PAINT - CASTINGS ARE FURNISHED WITH A BLACK PAINT
SIZE OF OPENING MEETS REQUIREMENTS OF AMERICAN DISABILITY ACT AS STATED IN FEDERAL REGISTER PART III, DEPARTMENT OF JUSTICE, 28 CFR PART 36

THIS PRINT DISCLOSES SUBJECT MATTER IN WHICH NYLOPLAST HAS PROPRIETARY RIGHTS. THE RECEIPT OR POSSESSION OF THIS PRINT DOES NOT CONFER, TRANSFER, OR LICENSE THE USE OF THE DESIGN OR TECHNICAL INFORMATION SHOWN HEREIN. REPRODUCTION OF THIS PRINT OR ANY INFORMATION CONTAINED HEREIN, OR MANUFACTURE OF ANY ARTICLE HEREFROM, FOR THE DISCLOSURE TO OTHERS IS FORBIDDEN, EXCEPT BY SPECIFIC WRITTEN PERMISSION FROM NYLOPLAST.

DRAWN BY: AWA | DATE: 3-5-09 | REVISED BY: EBC | DATE: 4-13-11 | MATERIAL | PROJECT NO./NAME | TITLE: 12 IN DROP IN | DWG SIZE: A | SCALE: 1:6 | SHEET: 1 OF 1 | DWG NO.: 7001-110-021 | REV: D

Nyloplast — 3126 VERONA AVE, BUFORD, GA 30518, PHN (770) 932-2440, FAX (770) 932-2490, www.nyloplast-us.com

WHEN ARE INLINE DRAINS USED?

2708AG _ _X
2710AG _ _X
2712AG _ _X
2715AG _ _X
2718AG _ _X
2724AG _ _X
2730AG _ _X

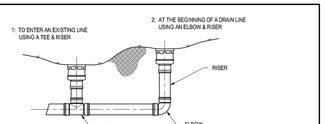

TYPICAL INSTALLATIONS

TYPICAL INSTALLATION OF NYLOPLAST DRAIN BASIN AND INLINE DRAIN

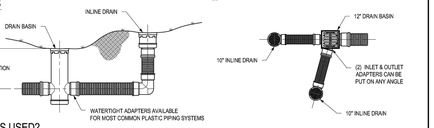

WHEN ARE DRAIN BASINS USED?

2808AG _ _X
2810AG _ _X
2812AG _ _X
2815AG _ _X
2818AG _ _X
2824AG _ _X
2830AG _ _X

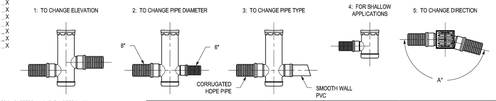

1 - STRUCTURES & ADAPTERS AVAILABLE IN SIZES 8" - 30"
2 - ADAPTERS CAN BE MOUNTED ON ANY ANGLE 0° TO 360°. TO DETERMINE MINIMUM ANGLE BETWEEN ADAPTERS SEE DRAWING NO. 7001-110-012
3 - DRAIN BASIN TO BE CUSTOM MANUFACTURED ACCORDING TO PLAN DETAILS. RISERS ARE NEEDED FOR BASINS OVER 84" DUE TO SHIPPING RESTRICTIONS SEE DRAWING NO. 7001-110-060

THIS PRINT DISCLOSES SUBJECT MATTER IN WHICH NYLOPLAST HAS PROPRIETARY RIGHTS. THE RECEIPT OR POSSESSION OF THIS PRINT DOES NOT CONFER, TRANSFER, OR LICENSE THE USE OF THE DESIGN OR TECHNICAL INFORMATION SHOWN HEREIN. REPRODUCTION OF THIS PRINT OR ANY INFORMATION CONTAINED HEREIN, OR MANUFACTURE OF ANY ARTICLE HEREFROM, FOR THE DISCLOSURE TO OTHERS IS FORBIDDEN, EXCEPT BY SPECIFIC WRITTEN PERMISSION FROM NYLOPLAST.

DRAWN BY: AWA | DATE: 9-10-08 | REVISED BY: EBC | DATE: 1-6-10 | MATERIAL | PROJECT NO./NAME | TITLE: 8 IN - 36 IN TYPICAL INSTALLATION OPTIONS | DWG SIZE: A | SCALE: 1:40 | SHEET: 1 OF 1 | DWG NO.: 7001-110-042 | REV: D

Nyloplast — 3126 VERONA AVE, BUFORD, GA 30518, PHN (770) 932-2440, FAX (770) 932-2490, www.nyloplast-us.com

NON TRAFFIC INSTALLATION

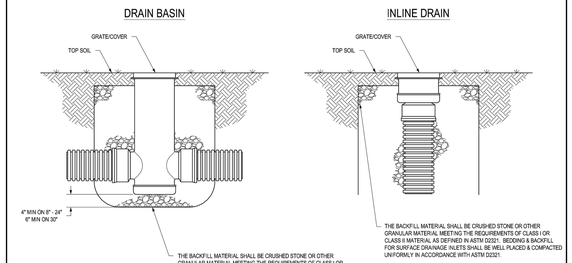

THIS PRINT DISCLOSES SUBJECT MATTER IN WHICH NYLOPLAST HAS PROPRIETARY RIGHTS. THE RECEIPT OR POSSESSION OF THIS PRINT DOES NOT CONFER, TRANSFER, OR LICENSE THE USE OF THE DESIGN OR TECHNICAL INFORMATION SHOWN HEREIN. REPRODUCTION OF THIS PRINT OR ANY INFORMATION CONTAINED HEREIN, OR MANUFACTURE OF ANY ARTICLE HEREFROM, FOR THE DISCLOSURE TO OTHERS IS FORBIDDEN, EXCEPT BY SPECIFIC WRITTEN PERMISSION FROM NYLOPLAST.

DRAWN BY: CJA | DATE: 9-30-09 | REVISED BY: CCA | DATE: 12-29-11 | MATERIAL | PROJECT NO./NAME | TITLE: DRAIN BASIN & INLINE DRAIN NON TRAFFIC INSTALLATION | DWG SIZE: A | SCALE: 1:25 | SHEET: 1 OF 1 | DWG NO.: 7001-110-111 | REV: D

Nyloplast — 3126 VERONA AVE, BUFORD, GA 30518, PHN (770) 932-2440, FAX (770) 932-2490, www.nyloplast-us.com

NYLOPLAST 12" DRAIN BASIN: 2812AG _ _X

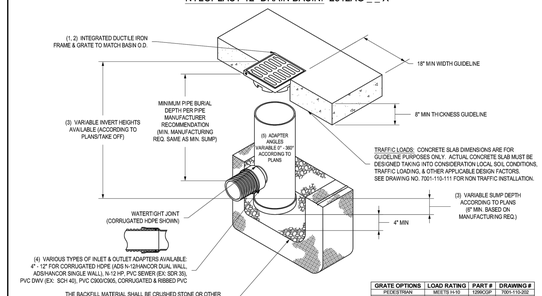

GRATE OPTIONS	LOAD RATING	PART #	DRAWING #
PEDESTRIAN	MEETS H-10	1296CGP	7001-110-202
STANDARD	MEETS H-20	1296CGS	7001-110-203
SOLID COVER	MEETS H-20	1296CGC	7001-110-204
PEDESTRIAN BRONZE	N/A	1296CGPB	7001-110-205
DOME	N/A	1296CGD	7001-110-206
DROP IN GRATE	LIGHT DUTY	12DTG	7001-110-021

1 - GRATES/SOLID COVER SHALL BE DUCTILE IRON PER ASTM A536 GRADE 70-50-05, WITH THE EXCEPTION OF THE BRONZE GRATE.
2 - FRAMES SHALL BE DUCTILE IRON PER ASTM A536 GRADE 70-50-05
3 - DRAIN BASIN TO BE CUSTOM MANUFACTURED ACCORDING TO PLAN DETAILS. RISERS ARE NEEDED FOR BASINS OVER 84" DUE TO SHIPPING RESTRICTIONS SEE DRAWING NO. 7001-110-060
4 - DRAINAGE CONNECTION STUB JOINT TIGHTNESS SHALL CONFORM TO ASTM C923 FOR CORRUGATED HDPE (ADS N-12/HANCOR DUAL WALL N-12 HP, & PVC SEWER.
5 - ADAPTERS CAN BE MOUNTED ON ANY ANGLE 0° TO 360°. TO DETERMINE MINIMUM ANGLE BETWEEN ADAPTERS SEE DRAWING NO. 7001-110-012

THIS PRINT DISCLOSES SUBJECT MATTER IN WHICH NYLOPLAST HAS PROPRIETARY RIGHTS. THE RECEIPT OR POSSESSION OF THIS PRINT DOES NOT CONFER, TRANSFER, OR LICENSE THE USE OF THE DESIGN OR TECHNICAL INFORMATION SHOWN HEREIN. REPRODUCTION OF THIS PRINT OR ANY INFORMATION CONTAINED HEREIN, OR MANUFACTURE OF ANY ARTICLE HEREFROM, FOR THE DISCLOSURE TO OTHERS IS FORBIDDEN, EXCEPT BY SPECIFIC WRITTEN PERMISSION FROM NYLOPLAST.

DRAWN BY: EBC | DATE: 03-29-06 | REVISED BY: CCA | DATE: 08-27-13 | MATERIAL | PROJECT NO./NAME | TITLE: 12 IN DRAIN BASIN QUICK SPEC INSTALLATION DETAIL | DWG SIZE: A | SCALE: 1:20 | SHEET: 1 OF 1 | DWG NO.: 7001-110-169 | REV: D

Nyloplast — 3126 VERONA AVE, BUFORD, GA 30518, PHN (770) 932-2440, FAX (770) 932-2490, www.nyloplast-us.com

ROOF LEADER COLLECTION DETAILS FOR NON-TRAFFIC AREAS

NOT TO SCALE

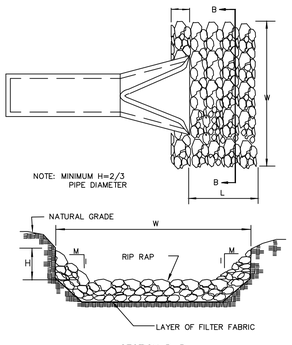

SECTION B-B

NOTES:

1. SEE OUTLET PROTECTION TABLE BELOW FOR RIP-RAP DIMENSIONS AND CLASSES.
2. RIPRAP SHOULD EXTEND UP BOTH SIDES OF THE APRON AND AROUND THE END OF THE PIPE OR CULVERT AT THE DISCHARGE OUTLET AT A MAXIMUM SLOPE OF 2:1 AND A HEIGHT NOT LESS THAN TWO THIRDS THE PIPE DIAMETER OR CULVERT HEIGHT.
3. THERE SHALL BE NO OVERFLOW FROM THE END OF THE APRON TO THE SURFACE OF THE RECEIVING CHANNEL. THE AREA TO BE PAVED OR RIPRAPPED SHALL BE UNDERCUT SO THAT THE INVERT OF THE APRON SHALL BE AT THE SAME GRADE (FLUSH) WITH THE SURFACE OF THE RECEIVING CHANNEL. THE APRON SHALL HAVE A CUTOFF OR TOE WALL AT THE DOWNSTREAM END.
4. THE WIDTH OF THE END OF THE APRON SHALL BE EQUAL TO THE BOTTOM WIDTH OF THE RECEIVING CHANNEL. MAXIMUM TAPER TO RECEIVING CHANNEL 5:1
5. ALL SUBGRADE FOR STRUCTURE TO BE COMPACTED TO 95% OR GREATER.
6. THE PLACING OF FILL, EITHER LOOSE OR COMPACTED IN THE RECEIVING CHANNEL SHALL NOT BE ALLOWED.
7. NO BENDS OR CURVES IN THE HORIZONTAL ALIGNMENT OF THE APRON WILL BE PERMITTED.

RIP RAP APRON OUTLETS

NOT TO SCALE

STORM DRAINAGE NOTES:

1. ALL PIPE BEDDING SHALL BE CLASS "C" UNLESS OTHERWISE DIRECTED BY THE ENGINEER.
2. ALL STORM DRAINAGE PIPES SHALL BE RCP CLASS III UNLESS OTHERWISE NOTED ON THE PLANS.
3. DO NOT PLANT TREES WITHIN UTILITY AND DRAINAGE EASEMENTS.
4. THE ENGINEER AND THE CONTRACTOR SHALL INSPECT ALL EXISTING PIPES USED IN THE FINAL DRAINAGE SYSTEM AND AGREE ON THE CONDITION OF THE PIPES PRIOR TO CONSTRUCTION. IF DAMAGE OCCURS TO THESE PIPES DURING CONSTRUCTION, THE CONTRACTOR SHALL BE RESPONSIBLE FOR THE REPAIR OR REPLACEMENT OF THE PIPE(S).
5. THE CONTRACTOR SHALL CONTACT ONECALL BEFORE COMMENCING ANY WORK. THE CONTRACTOR SHALL VERIFY THE LOCATION OF ALL UNDERGROUND UTILITIES WHETHER INDICATED ON THE DRAWINGS OR NOT. THE CONTRACTOR WILL ASSURE THE PRESENCE ONSITE OF A REPRESENTATIVE OF THE GAS COMPANY WHEN WORKING IN THE VICINITY OF ANY GAS MAINS.

OUTLET				ZONE	RIPRAP			APRON		
PC NUMBER	DIA (in)	Q (cfs)	V (fps)		D50 (in)	CLASS	Dmax (in)	THICKNESS (in)	LENGTH* (ft)	WIDTH (ft)
1	24	2.58	3.08	1	4	A	6	9	8	6.0

NOTES:
1.) Minimum apron length of 10 ft shall be installed.
2.) Dmax = D50 x 1.5
3.) Thickness = Dmax x 1.5
4.) Width = 3 x Pipe Dia.

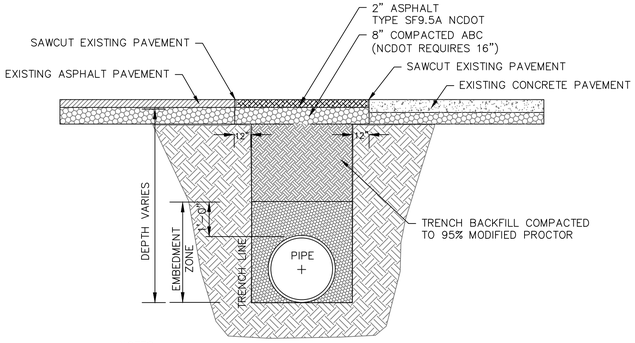

NOTES:

* BACKFILL TO BE INSTALLED IN 6" LIFTS (MAXIMUM) AND COMPACTED TO A MINIMUM DENSITY OF 95% AS DETERMINED BY THE MODIFIED A.A.S.H.T.O. STANDARD METHOD T-99
* CUT - BACK TO BE PREPARED AFTER TRENCH BACKFILLING AND COMPACTION

STANDARD SHOWING METHOD MAKING PAVEMENT REPAIRS WHERE PIPE IS INSTALLED

PAVEMENT REPAIR DETAIL

SD 1-16
NOT TO SCALE

FIG. 1
CLASS - C
SHAPED BOTTOM

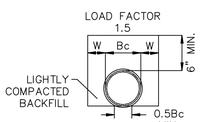

HAND SHAPED FROM FIRM UNDISTURBED SOIL

FIG. 2
CLASS - C
SHAPED BOTTOM

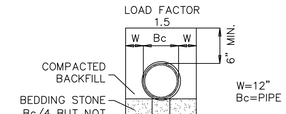

HAND SHAPED FROM ANGULAR BEDDING MATERIAL

GUIDELINES FOR BEDDING DETAILS, STORM SEWER CLASS C

SD 2-17
NOT TO SCALE

- EXCAVATION FOR STORM DRAINAGE PIPE SHALL BE TO THE LINES AND GRADES AS SHOWN ON THE PLANS.
- THE BEDDING SHALL BE SHAPED IN ACCORDANCE WITH CLASS "C" BEDDING AS SHOWN ON CITY STANDARD DETAIL SD 2-17.
- THE BEDDING SHALL PROVIDE A FIRM FOUNDATION OF UNIFORM DENSITY ALONG THE ENTIRE LENGTH OF PIPE. RECESSES SHALL BE MADE TO ACCOMMODATE BELLS AND JOINTS.
- WHERE UNSTABLE SOILS ARE ENCOUNTERED AS DETERMINED BY GEOTECHNICAL ENGINEER, A MINIMUM 4-INCH THICK BEDDING OF STONE SHALL BE PLACED, SEE FIGURE 2, SD 2-17.
- THE STONE SHALL BE UNIFORMLY GRADED FROM 3/4 INCH TO NO. 4 IN ACCORDANCE WITH ASTM C-33. CARE SHALL BE TAKEN TO PREVENT UNDERCUTTING IN SUITABLE SOIL.
- AREAS UNDERCUT SHALL BE FILLED WITH SUITABLE SOIL AND COMPACTED TO 95% OF MAXIMUM DENSITY AT OPTIMUM MOISTURE CONTENT AS DETERMINED BY ASTM D 1557 STANDARD TEST METHOD.

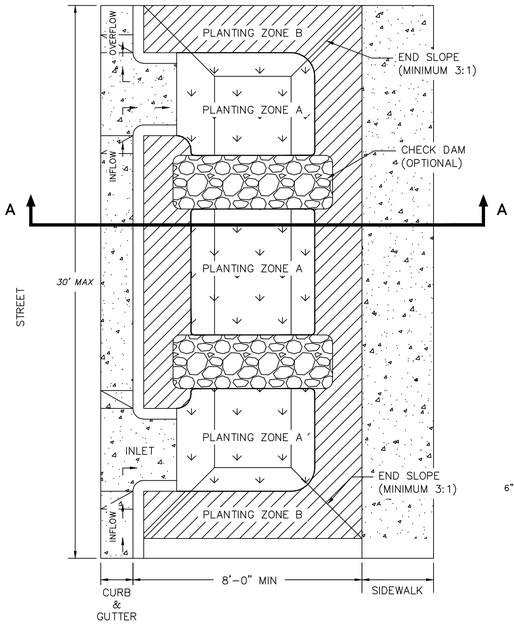

STREET SWALE PLAN VIEW

NOT TO SCALE

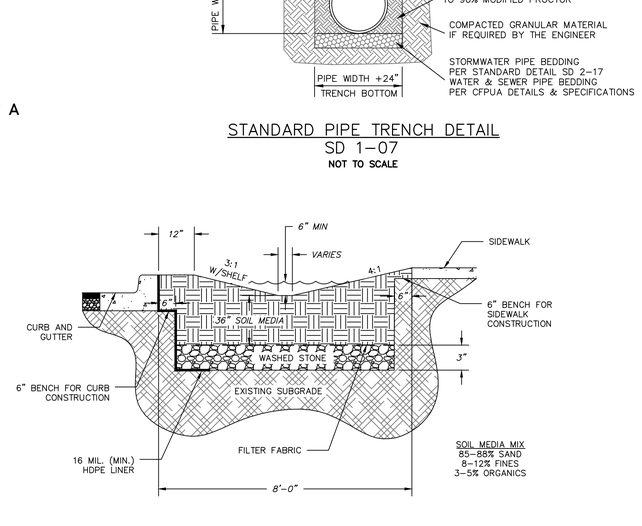

STANDARD PIPE TRENCH DETAIL

SD 1-07
NOT TO SCALE

STREET SWALE CROSS SECTION A-A

NOT TO SCALE

REV.NO.	DESCRIPTIONS	DATE
C	CITY OF WILMINGTON TECHNICAL REVIEW COMMITTEE RE-SUBMITTAL	01/07/2016
B	NEW HANOVER COUNTY EROSION AND SEDIMENT CONTROL RE-SUBMITTAL	01/04/2015
A	CITY OF WILMINGTON TECHNICAL REVIEW COMMITTEE SUBMITTAL	11/10/2015

REVISIONS

SEAL: FINAL DRAWING FOR REVIEW PURPOSES ONLY

SEAL

McKIM&CREED
243 North Front Street
Wilmington, North Carolina 28401
Phone: (910)343-1048, Fax: (910)251-8282
License: F-1222
www.mckimcreed.com

NASH — NORTH AMERICA SEKISUI HOUSE, LLC

RIVERLIGHTS by Newland COMMUNITIES

RIVERLIGHTS MARINA VILLAGE PHASE 1B

STORMWATER DRAINAGE DETAILS

DATE:	10NOV15
MCE PROJ. #	2735-0124
DRAWN	ALM
DESIGNED	NJL
CHECKED	KCBE
PROJ. MGR.	NJL

SCALE: HORIZONTAL: N/A; VERTICAL: N/A

M&C FILE NUMBER: CG-503
DRAWING NUMBER: 31

STATUS: FINAL DESIGN
NOT FOR CONSTRUCTION
REVISION: C

S:\2735\0124 Marina Village\90-Drawings\Phase 1B\CG-503.dwg, 1/14/2016 11:02:07 AM, AMtenderhall

NOTES:
1. NO JOINT SHALL BE INSTALLED BETWEEN THE MAIN SERVICE TAP AND THE METER STOP. ALL SERVICES SHALL BE INSTALLED PERPENDICULAR TO MAIN.
2. SERVICE SADDLES ON PVC MAINS SHALL BE WIDE BAND BRASS BODY: SADDLE McDONALD 3801 OR EQUIVALENT.
3. METER BOXES SUSCEPTIBLE TO TRAFFIC SHALL CONFORM TO ASTM A48, CLASS 30B AND AASHTO H20 LOAD RATING STANDARDS (SIP MODEL 4240 OR APPROVED EQUIVALENT).

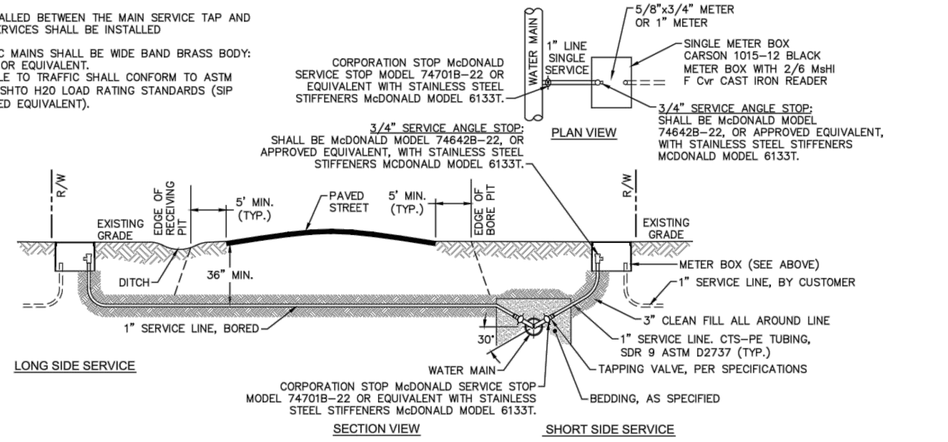

NOTE:
TYPICAL WATER SERVICE CONNECTION FOR RESIDENTIAL SINGLE FAMILY HOME ON CFPUA WATER SYSTEM

SINGLE SERVICE CONNECTION
NOT TO SCALE

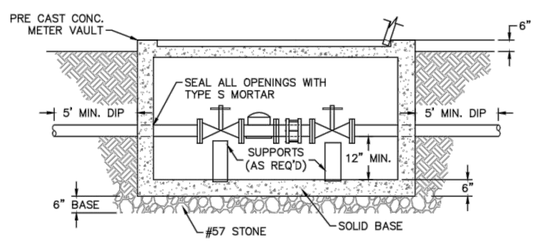

METER VAULT SECTION A-A

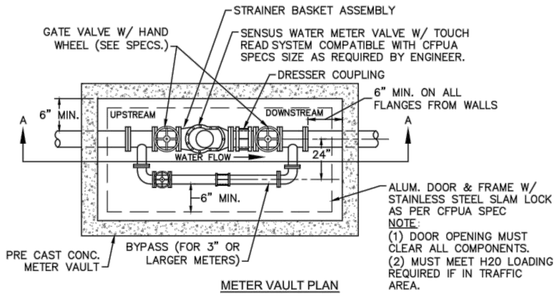

METER VAULT PLAN

FOR WATER METERS LARGER THAN 2"

WATER METER VAULT
NOT TO SCALE

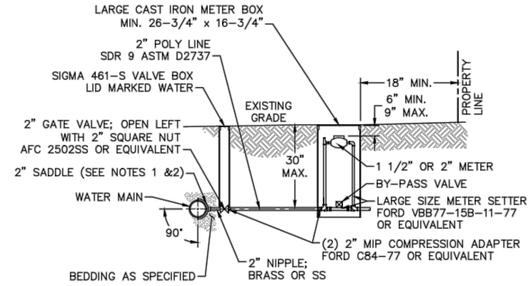

NOTES:
1. ALL SERVICES SHALL BE INSTALLED PERPENDICULAR TO MAIN.
2. SERVICE SADDLES ON PVC MAINS SHALL BE WIDE BAND BRASS BODY: McDONALD 3800, FORD S90 (DOUBLE STRAP) OR EQUIVALENT.
3. METER BOXES SUSCEPTIBLE TO TRAFFIC SHALL CONFORM TO ASTM A48, CLASS 30B AND AASHTO H20 LOAD RATING STANDARDS (OLDCASTLE PRECAST MODEL B1730 OR APPROVED EQUIVALENT).
4. METER BOXES SUSCEPTIBLE TO INCIDENTAL, NON-DELIBERATE TRAFFIC SHALL CONFORM TO ANSI/SCTE 77 TIER 15 LOAD RATING STANDARDS (SYNERTECH MODEL DUO 17x30 OR APPROVED EQUIVALENT).
5. NON-TRAFFIC METER BOXES SHALL BE SIGMA MB2203 OR APPROVED EQUIVALENT.
6. 3" CLEAN FILL REQUIRED ALL AROUND 2" POLY SERVICE LINE.

FOR 1-1/2" OR 2" WATER SERVICES

LARGE METER
NOT TO SCALE

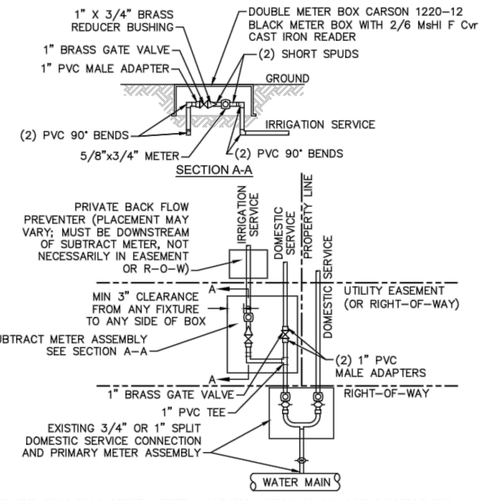

NOTES:
1. BEYOND THE PRIMARY DOMESTIC METER ASSEMBLY, CFPUA IS ONLY RESPONSIBLE FOR METER AND WASHERS OF SUBTRACT METER ASSEMBLY.
2. ALL PIPE AND FITTINGS UP TO FINAL SERVICE LINE TO BE 1" EXCLUDING METERS.

PLAN VIEW

(MULTIPLE DOMESTIC SERVICES PER TAP)

DOUBLE SERVICE CONNECTION USING SUBTRACT METER
NOT TO SCALE

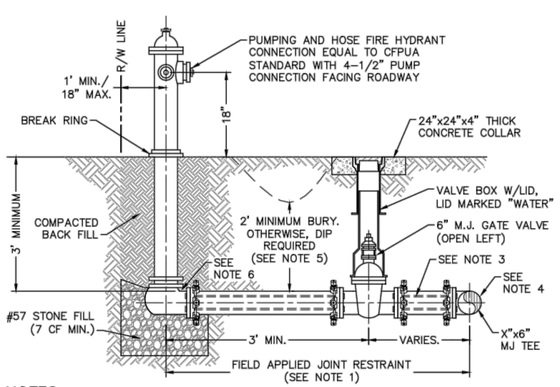

NOTES:
1. JOINT RESTRAINT SYSTEMS SHALL BE WEDGE ACTION STYLE FOR DI OR C-900 PVC PIPE AS MANUFACTURED BY EBAA IRON, SIGMA, STAR PIPE PRODUCTS OR APPROVED EQUAL.
2. WHEN HYDRANT LEGS REQUIRE FULL LENGTH PIPE SECTIONS, OVER BELL RESTRAINT SYSTEM SHALL HAVE 316 STAINLESS STEEL HARNESS AND FASTENERS.
3. CONTINUOUS 316 STAINLESS STEEL RODS (TEE TO VALVE AND VALVE TO HYDRANT) MAY BE USED WITH COR-BLUE MJ T-BOLT AND GASKET KITS, AS AN ALTERNATIVE.
4. HYDRANT TEE SHALL BE RESTRAINED ON EACH SIDE OF MAIN PLUS ANY VALVE, FITTING, OR JOINT IN MAIN WITHIN 10-FEET OF HYDRANT TEE.
5. HYDRANT AND VALVE SHALL BE PLACED OUTSIDE DITCH LIMITS.
6. WEEP HOLES OPEN AND UNBLOCKED TO DRAIN.

FIRE HYDRANT ASSEMBLY
NOT TO SCALE

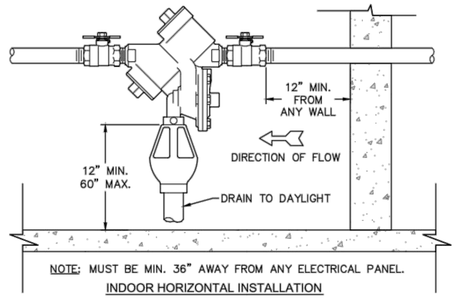

INDOOR HORIZONTAL INSTALLATION

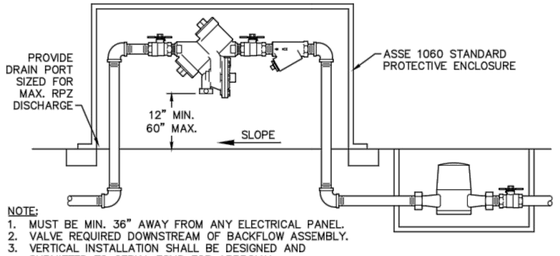

NOTE:
1. MUST BE MIN. 36" AWAY FROM ANY ELECTRICAL PANEL.
2. VALVE REQUIRED DOWNSTREAM OF BACKFLOW ASSEMBLY.
3. VERTICAL INSTALLATION SHALL BE DESIGNED AND SUBMITTED TO CFPUA ESMD FOR APPROVAL.

OUTDOOR HORIZONTAL INSTALLATION

REDUCED PRESSURE PRINCIPLE ASSEMBLY
NOT TO SCALE

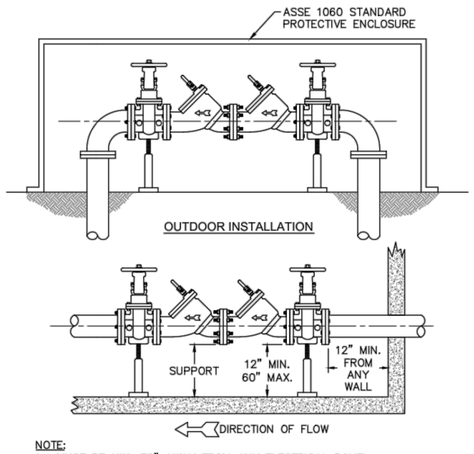

NOTE:
1. MUST BE MIN. 36" AWAY FROM ANY ELECTRICAL PANEL.
2. VALVE REQUIRED DOWNSTREAM OF BACKFLOW ASSEMBLY.
3. VERTICAL INSTALLATION SHALL BE DESIGNED AND SUBMITTED TO CFPUA ESMD FOR APPROVAL.

INDOOR INSTALLATION

DOUBLE CHECK VALVE ASSEMBLY
NOT TO SCALE

GENERAL NOTES:
1. NO EXCAVATED MATERIAL SHALL BE PLACED IN ANY STREAM, DITCH OR DRAINAGE-WAY.
2. THE CONTRACTOR IS RESPONSIBLE FOR LOCATING ALL UNDERGROUND UTILITIES BEFORE ANY CONSTRUCTION BEGINS.
3. THE CONTRACTOR IS RESPONSIBLE FOR TEMPORARY SEDIMENT AND EROSION CONTROL MEASURES WHILE CONSTRUCTION IS IN PROGRESS.
4. THE CONTRACTOR IS RESPONSIBLE FOR STABILIZATION OF ALL DISTURBED AREAS.
5. THE CONTRACTOR IS RESPONSIBLE FOR LAY DOWN AND STOCKPILE AREAS (TO ARRANGE AND ENSURE COMPLIANCE WITH ALL LOCAL AND STATE REGULATIONS).

THE DETAILS SHOWN HEREON SUPERCEDE CFPUA WRITTEN TECHNICAL SPECIFICATIONS VERSIONS 1.00 - 1.04

REV:	DESCRIPTION:	DATE:
1	Single Service Connection, Double Service Connection, and Large Meter Revised	10/26/12
2	Single Service Connection and Fire Hydrant Details Revised	7/23/13
3	Fire Hydrant Detail Revised	01/03/14

CFPUA WATER DISTRIBUTION SYSTEM

NORTH CAROLINA PROFESSIONAL ENGINEER SEAL CIVIL 035107 NICHOLAS J. LAURETTA 12/29/15

STANDARD DETAILS

DATE: 1/9/12
SCALE: N/A
DRAWN BY: CFPUA
CHECKED BY: CFPUA
PROJECT NO. :

CAPE FEAR PUBLIC UTILITY AUTHORITY
235 GOVERNMENT CENTER DRIVE
WILMINGTON, NC 28403
OFFICE: (910)332-6560
Stewardship. Sustainability. Service.

SHEET NO: WSD-1

S:\27350\124 Marina Village\80-Drawings\Phase 1B\CIS-503.dwg, 11/4/2016 11:02:11 AM, AMendenhall

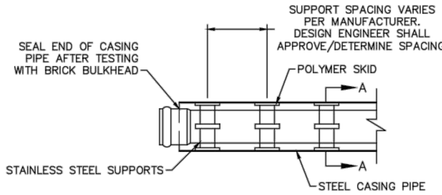

PLAN

NOTE: PIPE SUPPORT TO BE PLACED TO PROVIDE PROPER SUPPORT, ALIGNMENT, AND GRADE AS SPECIFIED. CONTINUOUS SUPPORTS MAY BE USED AS ALTERNATIVE. OIL, GREASE, OR PETROLEUM PRODUCT MAY NOT BE USED AS LUBRICANT.

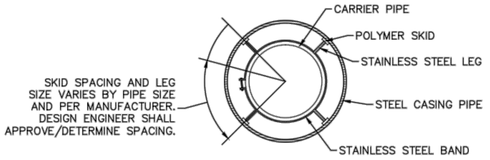

SECTION A-A

PIPE CASING SUPPORT DETAIL

NOT TO SCALE

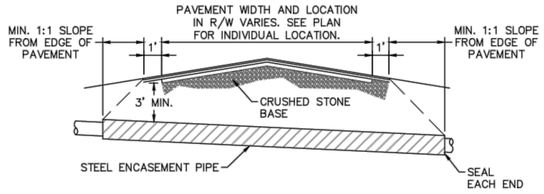

NOTES:
1. CASING WILL BE INSTALLED AT LINE AND GRADE SHOWN ON INDIVIDUAL PROFILE FOR EACH CROSSING. BORING/JACKING TO LINE AND GRADE IS REQUIRED.
2. TRACER WIRE SHALL BE CONTINUED THROUGH CASING.

TYPICAL BORING/ JACKING DETAIL

NOT TO SCALE

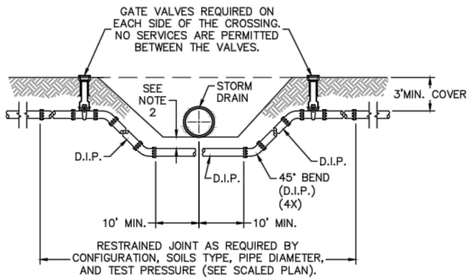

NOTES:
1. USE PRESSURE CLASS 350 DIP, UNLESS SPECIFIED OTHERWISE.
2. MINIMUM DEPTH REQUIRED, UNLESS SPECIFIED OTHERWISE BY CFPUA:
   a. IN DOT R/W, 36" MIN. TYPICAL, OR 24" MIN. WHEN CROSSING A DITCH LINE.
   b. ALL OTHER LOCATIONS, 30" MIN.
   c. WHEN STORM DRAIN INVERT IS BURIED AT OR BELOW ABOVE DEPTHS, 18" MIN. CLEARANCE IS REQUIRED.

WATER MAIN DITCH AND STORM DRAIN CROSSING

NOT TO SCALE

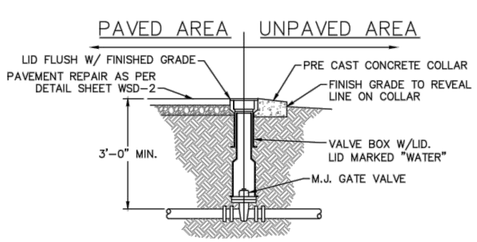

VALVE DETAIL

NOT TO SCALE

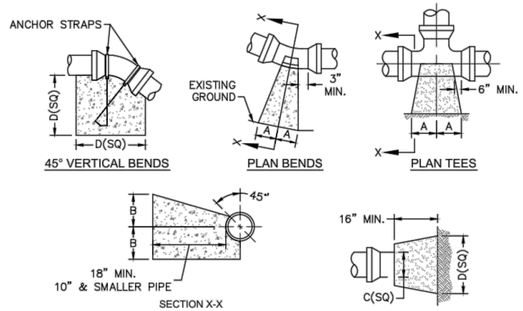

SIZE	90 BENDS A	90 BENDS B	45 BENDS A	45 BENDS B	22 1/2 BENDS A	22 1/2 BENDS B	TEES/PLUGS A	TEES/PLUGS B	45 VERT. BENDS
3"	8"	6"	5"	6"	3"	7"	6"	8"	27"
4"	8"	9"	5"	8"	3"	11"	6"	9"	28"
6"	14"	11"	9"	9"	8"	8"	12"	9"	36"
8"	16"	16"	12"	12"	10"	13"	14"	13"	42"
10"	18"	22"	15"	14"	14"	16"	18"	15"	50"
12"	20"	28"	18"	17"	16"	16"	22"	18"	62"
14"	26"	29"	21"	19"	18"	18"	26"	20"	72"
16"	33"	29"	25"	21"	20"	21"	32"	21"	83"
18"	40"	30"	28"	24"	22"	23"	36"	24"	88"

NOTES:
1. BASED ON 160 PSI TEST PRESSURE AND 2000 PSF SOIL BEARING CAPACITY.
2. ALL BEARING SURFACES TO BE CARRIED TO UNDISTURBED GROUND.
3. USE MEG-A-LUG (PREFERRED) IN LIEU OF BLOCKING AND RODDING.

THRUST BLOCK DETAIL

NOT TO SCALE

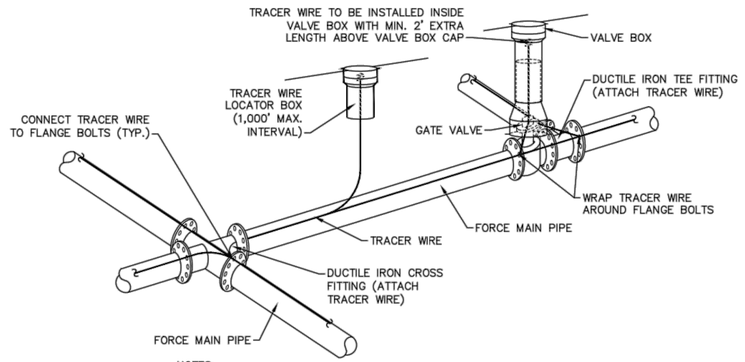

NOTES:
1. TRACER WIRE SHALL BE #10 COPPER SOLID CORE COPPER WIRE WITH GAS AND OIL RESISTANT INSULATION
2. WIRE SHALL BE STRAPPED TO ALL PVC FORCE MAIN PIPING WITH DUCT TAPE AT 12-FT. INTERVALS.
3. SECURE WIRE TO ALL TEE AND CROSS FITTINGS.
4. ALL WIRE SPLICES SHALL HAVE WATER PROOF WIRE CONNECTIONS.

TRACER WIRE DETAIL

NOT TO SCALE

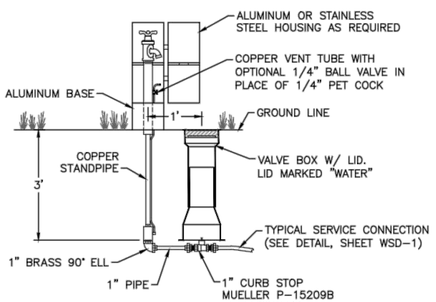

SAMPLING STATION

NOT TO SCALE

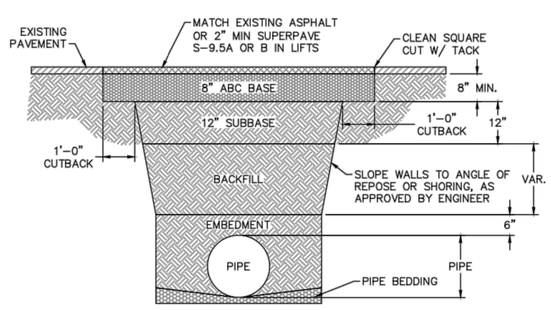

NOTES:
1. BACKFILL SHALL BE SUITABLE MATERIAL THAT IS FREE FROM HEAVY CLAY, GUMBOS, DEBRIS, ORGANICS AND LITTLE TO NO EXCESSIVE MOISTURE.
2. SELECT BACKFILL MAY BE SUBSTITUTED OR REQUIRED BY CITY TO ACHIEVE COMPACTION, (I.E. #57, ABC, CRUSHED LIMESTONE, CLEAN SAND, FLOWABLE FILL, ETC).
3. 8-INCH OF ABC BASE MATERIAL SHALL BE USED ON CITY STREETS.
4. BACKFILL AND BASE MATERIALS SHALL BE COMPACTED 12" MINIMUM LIFTS
5. SOIL SHALL BE COMPACTED BY A MECHANIZED TAMPER (I.E JUMPING JACK), HOWEVER, VIBRATORY ROLLERS > 18" WIDTH MAY BE USED FOR LARGER EXCAVATIONS. THE PLATE TAMP METHOD SHALL NOT BE USED.
6. ALL APPROVED CASTINGS SHALL BE SET FLUSH TO GRADE AND SUPPORTED IF APPLICABLE.
7. ABC BASE AND SUBBASE COMPACTED TO 98% AND BACKFILL AND EMBEDMENT COMPACTED TO 90% AS DETERMINED BY THE MODIFIED PROCTOR AASHTO METHOD T-99.
8. 1-FOOT CUTBACKS OF ASPHALT SHALL BE PREPARED ON UNDISTURBED SOIL. MINIMUM ASPHALT DENSITY IS 90%.

(FOR PRIVATE ROADS AND PAVED AREAS; CONTRACTOR TO MEET MIN. REQUIREMENTS AS DEFINED BY RIGHT-OF-WAY OWNER FOR PUBLIC ROAD REPAIRS)

PAVEMENT REPAIR WHERE PIPE INSTALLED

NOT TO SCALE

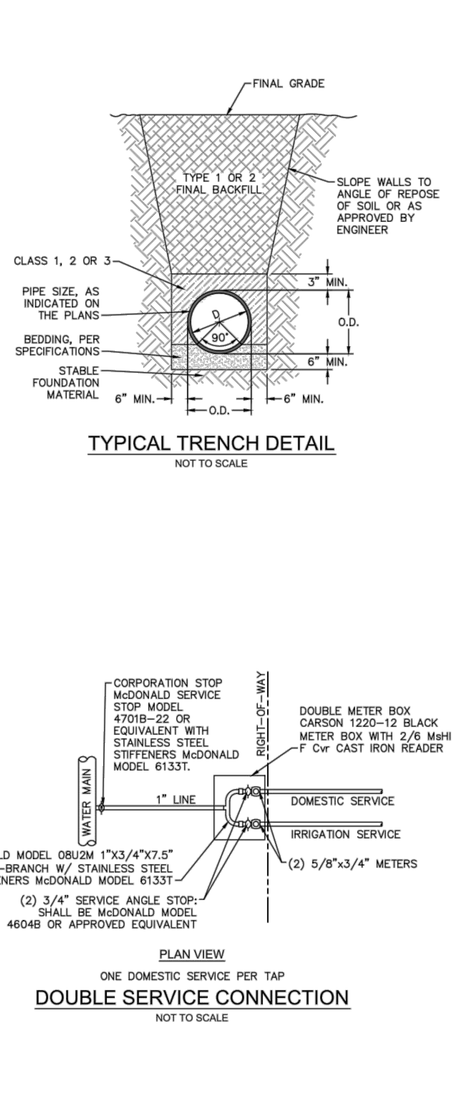

TYPICAL TRENCH DETAIL

NOT TO SCALE

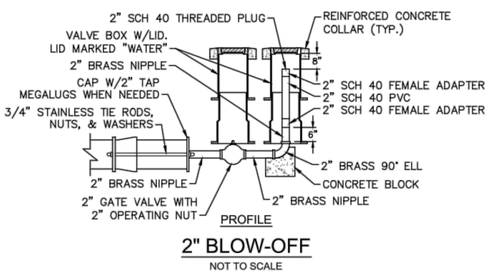

2" BLOW-OFF

NOT TO SCALE

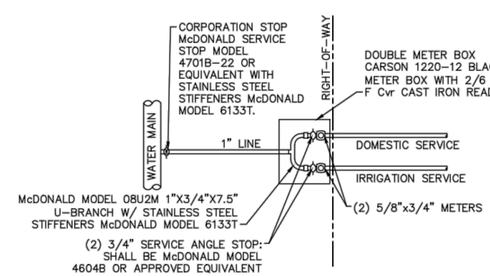

PLAN VIEW

ONE DOMESTIC SERVICE PER TAP

DOUBLE SERVICE CONNECTION

NOT TO SCALE

GENERAL NOTES:
1. NO EXCAVATED MATERIAL SHALL BE PLACED IN ANY STREAM, DITCH OR DRAINAGE-WAY.
2. THE CONTRACTOR IS RESPONSIBLE FOR LOCATING ALL UNDERGROUND UTILITIES BEFORE ANY CONSTRUCTION BEGINS.
3. THE CONTRACTOR IS RESPONSIBLE FOR TEMPORARY SEDIMENT AND EROSION CONTROL MEASURES WHILE CONSTRUCTION IS IN PROGRESS.
4. THE CONTRACTOR IS RESPONSIBLE FOR STABILIZATION OF ALL DISTURBED AREAS.
5. THE CONTRACTOR IS RESPONSIBLE FOR LAY DOWN AND STOCKPILE AREAS (TO ARRANGE AND ENSURE COMPLIANCE WITH ALL LOCAL AND STATE REGULATIONS).

THE DETAILS SHOWN HEREON SUPERCEDE CFPUA WRITTEN TECHNICAL SPECIFICATIONS VERSIONS 1.00 - 1.04

REV:	DESCRIPTION:	DATE:
1	Revised Water Main Ditch and Storm Crossing Detail	11/12/13
2	Revised Water Main Ditch and Storm Crossing Detail	05/05/14

CFPUA WATER DISTRIBUTION SYSTEM

STANDARD DETAILS

NORTH CAROLINA PROFESSIONAL ENGINEER SEAL 035107 NICHOLAS J. LAURETTA CIVIL 12/29/15

CAPE FEAR PUBLIC UTILITY AUTHORITY
235 GOVERNMENT CENTER DRIVE
WILMINGTON, NC 28403
OFFICE: (910)332-6560
Stewardship. Sustainability. Service.

DATE: 1/9/12
SCALE: N/A
DRAWN BY: CFPUA
CHECKED BY: CFPUA
PROJECT NO. :

SHEET NO: WSD-2

S:\27350\1214 Marina Village\90-Drawings\Phase 1B\CS-503.dwg, 11/4/2016 11:02:13 AM, AMendenhall

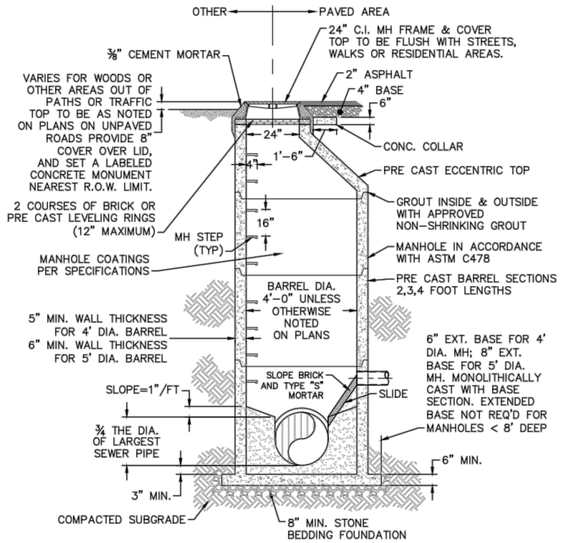

LESS THAN 30" DROP

PRECAST CONCRETE OFFSET MANHOLE TYPICAL

NOT TO SCALE

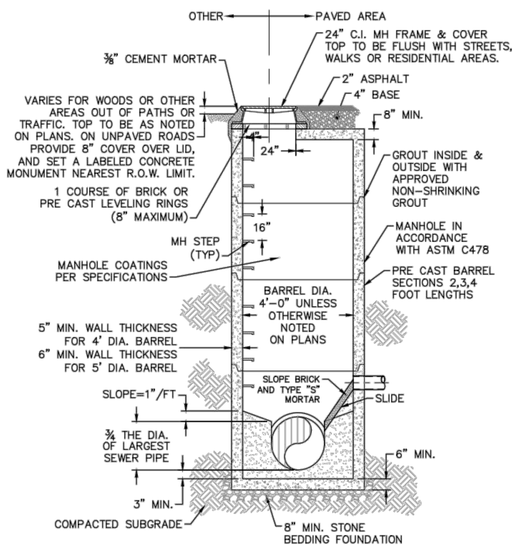

LESS THAN 30" DROP

PRECAST CONCRETE FLAT TOP MANHOLE TYPICAL

NOT TO SCALE

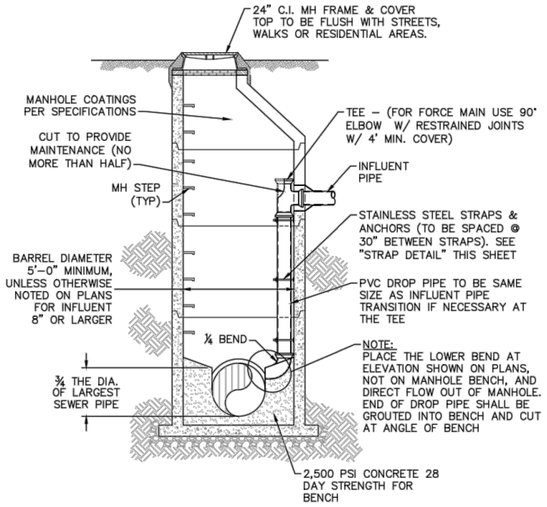

MORE THAN 30" DROP

DROP MANHOLE

NOT TO SCALE

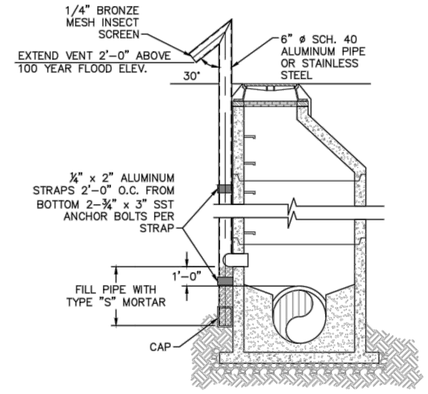

STANDARD VENT MANHOLE

NOT TO SCALE

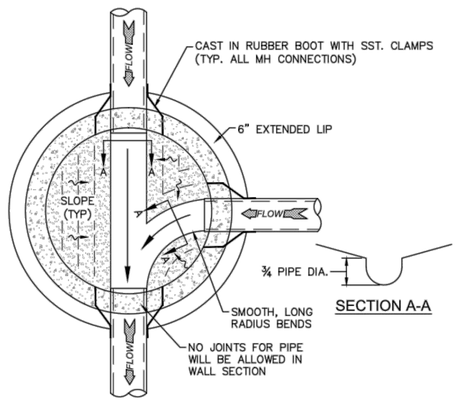

MANHOLE FLOOR PLAN

NOT TO SCALE

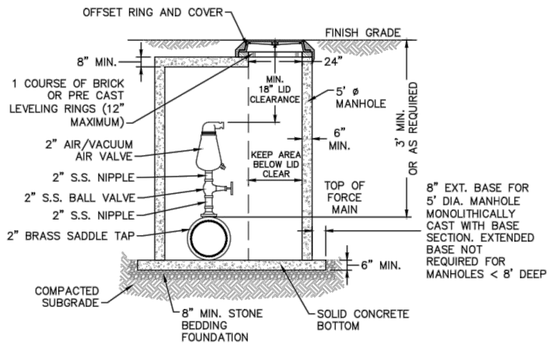

NOTES:
1. CONTRACTOR TO INSTALL VALVE AND MANHOLE AT SUFFICIENT DEPTH TO ALLOW FOR ACCESS.
2. FORCE MAIN TO BE OFFSET IN MANHOLE TO KEEP AREA BELOW LID CLEAR.
3. REFER TO SPECIFICATIONS FOR ADDITIONAL DETAILS.
4. USE CAST IN RUBBER BOOT WITH SST. CLAMPS FOR ALL MH CONNECTIONS, INCLUDING FORCE MAIN.

AIR/ VACUUM AND AIR RELEASE COMBINATION VALVE

NOT TO SCALE

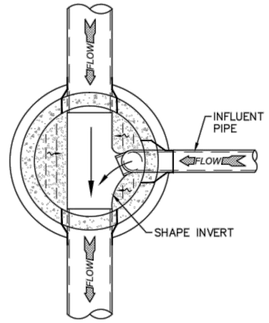

DROP MANHOLE FLOOR PLAN

NOT TO SCALE

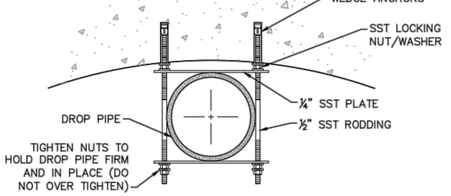

NOTE: ALL PARTS TO BE SST.

STRAP DETAIL

NOT TO SCALE

CAPE FEAR PUBLIC UTILITY AUTHORITY STANDARD SEWER NOTES:

1. SEWER GUARDS REQUIRED AT ALL MANHOLES. STAINLESS STEEL SEWER GUARDS REQUIRED AT MANHOLES LOCATED IN TRAFFIC AREAS.
2. SERVICES SHALL BE PERPENDICULAR TO MAIN AND TERMINATE AT RIGHT-OF-WAY LINE. SERVICES IN CUL-DE-SACS ARE REQUIRED TO BE PERPENDICULAR, OR MUST ORIGINATE IN MANHOLE AND TERMINATE AT RIGHT-OF-WAY LINE.
3. ALL SERVICES TYING INTO DUCTILE IRON MAINS SHALL BE CONSTRUCTED OF CLASS 50, DIP, WITH PROTECTO 401 CERAMIC EPOXY LINING.
4. MINIMUM 10' UTILITIES EASEMENT PROVIDED ALONG THE FRONTAGE OF ALL LOTS AND AS SHOWN FOR NEW DEVELOPMENTS.
5. NO FLEXIBLE COUPLINGS SHALL BE USED.
6. ALL STAINLESS STEEL FASTENERS SHALL BE 316.

STANDARD SEWER NOTES

(REQUIRED ON ALL SEWER PLAN AND PROFILE SHEETS)

GENERAL NOTES:
1. NO EXCAVATED MATERIAL SHALL BE PLACED IN ANY STREAM, DITCH OR DRAINAGE-WAY.
2. THE CONTRACTOR IS RESPONSIBLE FOR LOCATING ALL UNDERGROUND UTILITIES BEFORE ANY CONSTRUCTION BEGINS.
3. THE CONTRACTOR IS RESPONSIBLE FOR TEMPORARY SEDIMENT AND EROSION CONTROL MEASURES WHILE CONSTRUCTION IS IN PROGRESS.
4. THE CONTRACTOR IS RESPONSIBLE FOR STABILIZATION OF ALL DISTURBED AREAS.
5. THE CONTRACTOR IS RESPONSIBLE FOR LAY DOWN AND STOCKPILE AREAS (TO ARRANGE AND ENSURE COMPLIANCE WITH ALL LOCAL AND STATE REGULATIONS).

THE DETAILS SHOWN HEREON SUPERCEDE CFPUA WRITTEN TECHNICAL SPECIFICATIONS VERSIONS 1.00 - 1.04

REV:	DESCRIPTION:	DATE:
1	AIR / VACUUM AND AIR RELEASE COMBINATION VALVE REVISED	10/26/12
2	STANDARD SEWER NOTE #6 REVISED	12/10/12
3	REVISED STANDARD VENT MANHOLE TO EXTEND VENT 2'-0" ABOVE 100 YR FLOOD	11/20/14

NORTH CAROLINA PROFESSIONAL SEAL CIVIL 035107 ENGINEER NICHOLAS J. LAURETTA
12/29/15

CFPUA SANITARY SEWER

STANDARD DETAILS

CAPE FEAR PUBLIC UTILITY AUTHORITY
235 GOVERNMENT CENTER DRIVE
WILMINGTON, NC 28403
OFFICE: (910)332-6560
Stewardship. Sustainability. Service.

DATE: 1/9/12
SCALE: N/A
DRAWN BY: CFPUA
CHECKED BY: CFPUA
PROJECT NO. :

SHEET NO: SSD-1

S:\27350\324 Marina Village\90-Drawings\Phase 1B\CG-503.dwg, 11/4/2016 11:02:15 AM, AMenderhall
S:\Engineers\2002_Planning and Design Division\data\cad\Designcad files for data\Standard Details\CFPUA Standard Details\CFPUA Sewer Details.dwg, 11/20/2014 9:33:05 AM, jshurcott

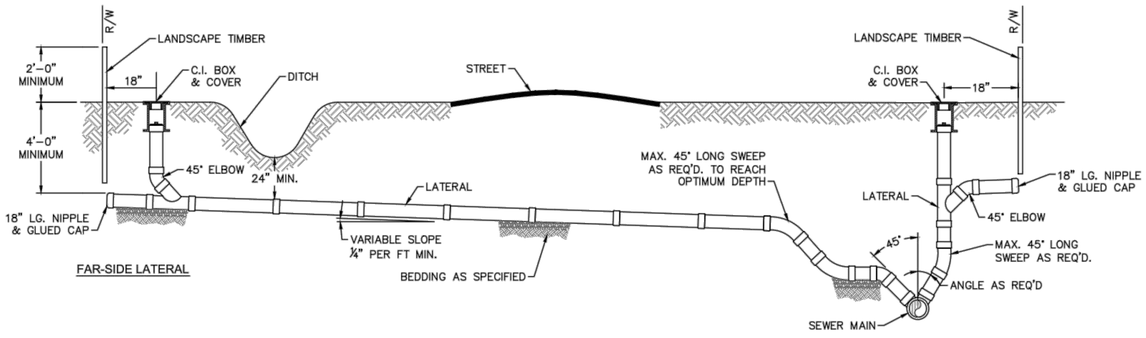

NOTE: FOR PRIVATE 8" SERVICES, MANHOLES ARE REQUIRED FOR TIE–IN TO MAIN

STANDARD SERVICE CONNECTION TO SANITARY SEWER

NOT TO SCALE

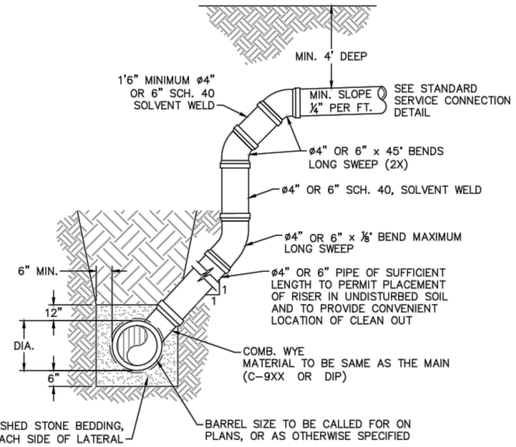

NOTES:
1. SPECIAL CARE SHALL BE TAKEN DURING BACKFILL OPERATIONS. THE RISER SHALL BE PLUMB AND TRUE AT ALL TIMES, AND REST ON FIRM, STABLE FOUNDATION.
2. FOR PRIVATE 8" SERVICES, MANHOLES ARE REQUIRED FOR TIE–IN TO MAIN.

MAIN DEPTH GREATER THAN 8 FT

DEEP SERVICE LATERAL

NOT TO SCALE

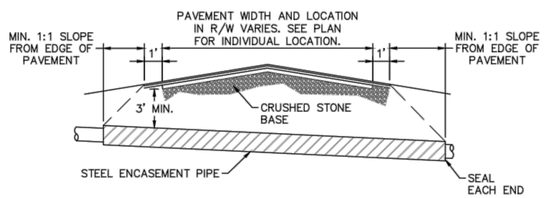

NOTES:
1. CASING WILL BE INSTALLED AT LINE AND GRADE SHOWN ON INDIVIDUAL PROFILE FOR EACH CROSSING. BORING/JACKING TO LINE AND GRADE IS REQUIRED.
2. TRACER WIRE SHALL BE CONTINUED THROUGH CASING.

TYPICAL BORING/ JACKING DETAIL

NOT TO SCALE

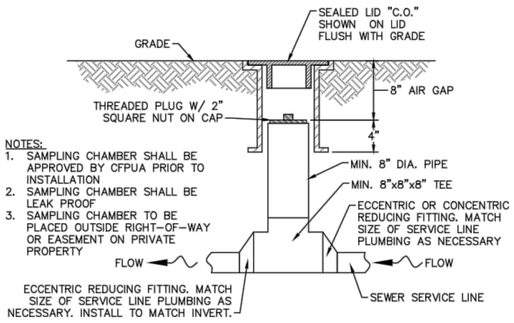

NOTES:
1. SAMPLING CHAMBER SHALL BE APPROVED BY CFPUA PRIOR TO INSTALLATION
2. SAMPLING CHAMBER SHALL BE LEAK PROOF
3. SAMPLING CHAMBER TO BE PLACED OUTSIDE RIGHT–OF–WAY OR EASEMENT ON PRIVATE PROPERTY

SAMPLING CHAMBER

NOT TO SCALE

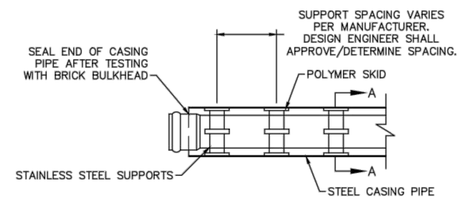

PLAN

NOTE: PIPE SUPPORT TO BE PLACED TO PROVIDE PROPER SUPPORT, ALIGNMENT, AND GRADE AS SPECIFIED. CONTINUOUS SUPPORTS MAY BE USED AS ALTERNATIVE. OIL, GREASE, OR PETROLEUM PRODUCT MAY NOT BE USED AS LUBRICANT.

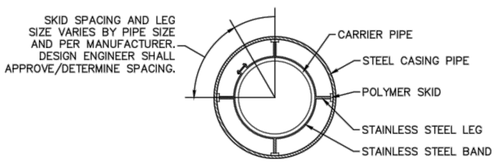

SECTION A-A

PIPE CASING SUPPORT DETAIL

NOT TO SCALE

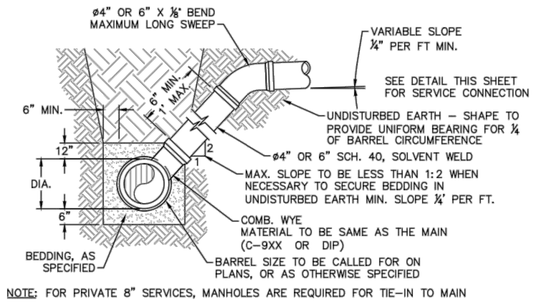

NOTE: FOR PRIVATE 8" SERVICES, MANHOLES ARE REQUIRED FOR TIE–IN TO MAIN

MAIN DEPTH LESS THAN 8 FT

STANDARD SERVICE LATERAL

NOT TO SCALE

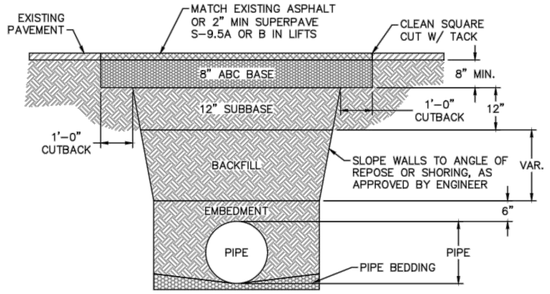

NOTES:
1. BACKFILL SHALL BE SUITABLE MATERIAL THAT IS FREE FROM HEAVY CLAY, GUMBOS, DEBRIS, ORGANICS AND LITTLE TO NO EXCESSIVE MOISTURE.
2. SELECT BACKFILL MAY BE SUBSTITUTED OR REQUIRED BY CITY TO ACHIEVE COMPACTION, (I.E. #57, ABC, CRUSHED LIMESTONE, CLEAN SAND, FLOWABLE FILL, ETC).
3. 8–INCH OF ABC BASE MATERIAL SHALL BE USED ON CITY STREETS.
4. BACKFILL AND BASE MATERIALS SHALL BE COMPACTED 12" MINIMUM LIFTS
5. SOIL SHALL BE COMPACTED BY A MECHANIZED TAMPER (I.E JUMPING JACK), HOWEVER, VIBRATORY ROLLERS > 18" WIDTH MAY BE USED FOR LARGER EXCAVATIONS. THE PLATE TAMP METHOD SHALL NOT BE USED.
6. ALL APPROVED CASTINGS SHALL BE SET FLUSH TO GRADE AND SUPPORTED IF APPLICABLE.
7. ABC BASE AND SUBBASE COMPACTED TO 98% AND BACKFILL AND EMBEDMENT COMPACTED TO 90% AS DETERMINED BY THE MODIFIED PROCTOR AASHTO METHOD T–99.
8. 1–FOOT CUTBACKS OF ASPHALT SHALL BE PREPARED ON UNDISTURBED SOIL. MINIMUM ASPHALT DENSITY IS 90%.

(FOR PRIVATE ROADS AND PAVED AREAS; CONTRACTOR TO MEET MIN. REQUIREMENTS AS DEFINED BY RIGHT-OF-WAY OWNER FOR PUBLIC ROAD REPAIRS)

PAVEMENT REPAIR WHERE PIPE INSTALLED

NOT TO SCALE

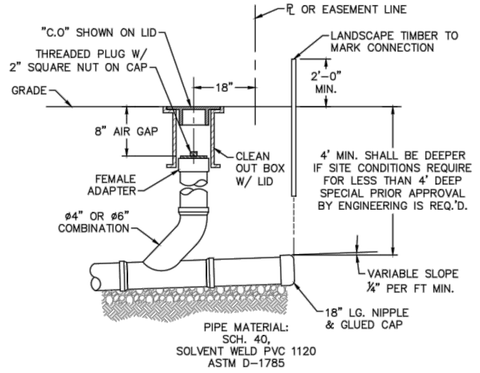

NOTE: FOR PRIVATE 8" SERVICES, MANHOLES ARE REQUIRED FOR TIE–IN TO MAIN

SERVICE CONNECTION & CLEAN-OUT

NOT TO SCALE

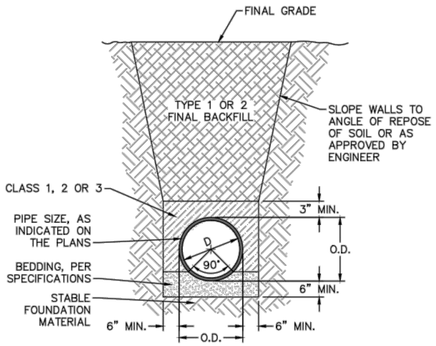

TYPICAL TRENCH DETAIL

NOT TO SCALE

GENERAL NOTES:
1. NO EXCAVATED MATERIAL SHALL BE PLACED IN ANY STREAM, DITCH OR DRAINAGE–WAY.
2. THE CONTRACTOR IS RESPONSIBLE FOR LOCATING ALL UNDERGROUND UTILITIES BEFORE ANY CONSTRUCTION BEGINS.
3. THE CONTRACTOR IS RESPONSIBLE FOR TEMPORARY SEDIMENT AND EROSION CONTROL MEASURES WHILE CONSTRUCTION IS IN PROGRESS.
4. THE CONTRACTOR IS RESPONSIBLE FOR STABILIZATION OF ALL DISTURBED AREAS.
5. THE CONTRACTOR IS RESPONSIBLE FOR LAY DOWN AND STOCKPILE AREAS (TO ARRANGE AND ENSURE COMPLIANCE WITH ALL LOCAL AND STATE REGULATIONS).

THE DETAILS SHOWN HEREON SUPERCEDE CFPUA WRITTEN TECHNICAL SPECIFICATIONS VERSIONS 1.00 - 1.04

REV:	DESCRIPTION:	DATE:
1	SAMPLING CHAMBER REVISED	10/26/12

CFPUA SANITARY SEWER

NORTH CAROLINA PROFESSIONAL SEAL CIVIL 035107 ENGINEER NICHOLAS J. LAURETTA
12/29/15

STANDARD DETAILS

CAPE FEAR PUBLIC UTILITY AUTHORITY
235 GOVERNMENT CENTER DRIVE
WILMINGTON, NC 28403
OFFICE: (910)332-6560
Stewardship. Sustainability. Service.

DATE: 1/9/12
SCALE: N/A
DRAWN BY: CFPUA
CHECKED BY: CFPUA
PROJECT NO. :

SHEET NO: SSD-2

S:\27350124 Marina Village\80-Drawings\Phase 1B\CG-503.dwg, 1/14/2016 11:02:17 AM, AMendenhall

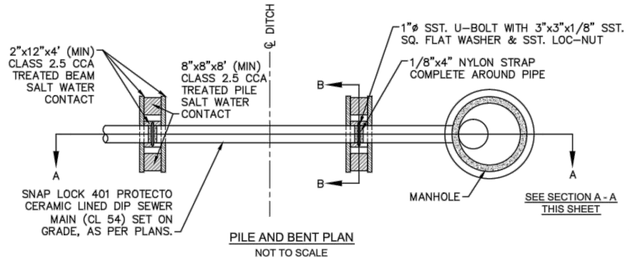

PILE AND BENT PLAN

NOT TO SCALE

NOTES:
1. PILES AND PILE DRIVING SHALL CONFORM TO NCDOT STANDARD SPECIFICATIONS FOR ROADS AND STRUCTURES, JANUARY 2002, SECTIONS 445, 450, 1082-2 & 1084-2.
2. CENTERLINE OF BOLTS TO BE A MINIMUM OF 3" FROM OUTSIDE EDGE OF TIMBER. BOLTS TO BE A MINIMUM OF 3" CENTERLINE TO CENTERLINE.
3. ALL STAINLESS STEEL SHALL BE 316. STAINLESS STRAP TO BE COLD FORMED.
4. PILE SHALL NOT OBSTRUCT FLOW OR CAUSE EROSION OF DITCH/STREAM BANK.
5. MIN. CLASS 54 DIP-ENGINEER MUST DESIGN LOADING.
6. DESIGN SHALL BE APPROVED BY CFPUA.

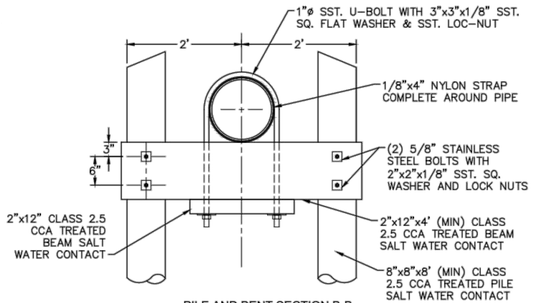

PILE AND BENT SECTION B-B

NOT TO SCALE

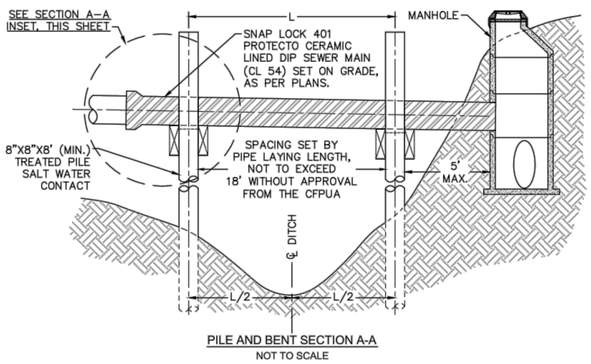

PILE AND BENT SECTION A-A

NOT TO SCALE

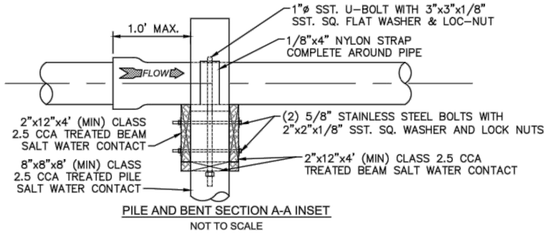

PILE AND BENT SECTION A-A INSET

NOT TO SCALE

PILE AND BENT DETAIL

NOT TO SCALE

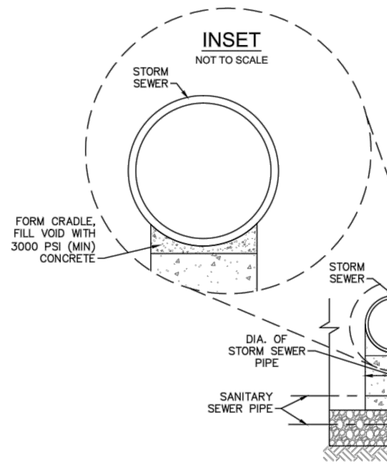

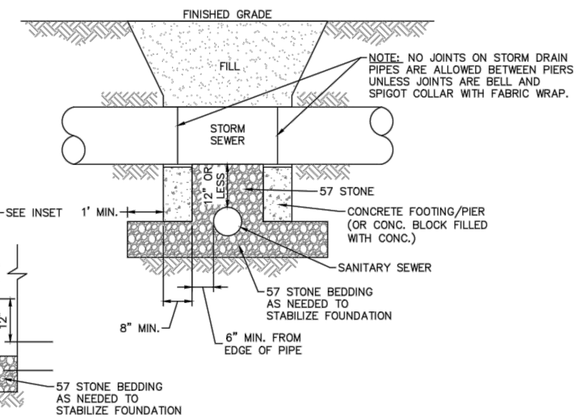

STRUCTURAL BRIDGING DETAIL FOR STORMWATER OVER GRAVITY SEWER INSTALLATIONS WITH LESS THAN 12" SEPARATION

NOT TO SCALE

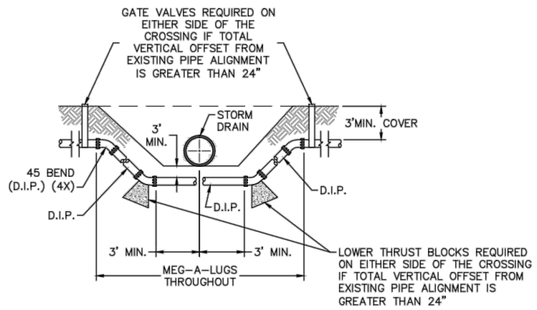

NOTE: USE D.I.P. (CL50 OR BETTER)

FORCE MAIN DITCH AND STORM DRAIN CROSSING

NOT TO SCALE

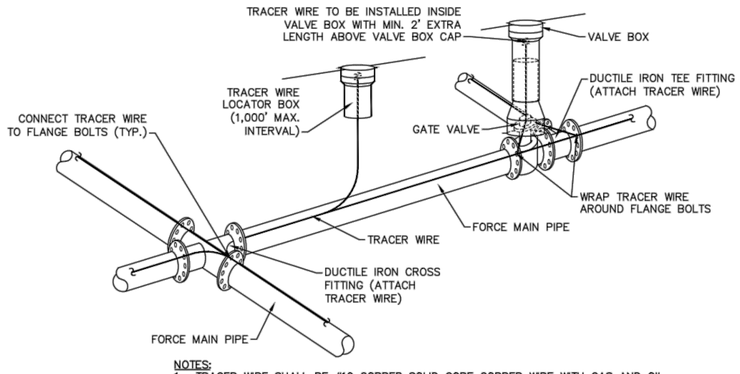

NOTES:
1. TRACER WIRE SHALL BE #10 COPPER SOLID CORE COPPER WIRE WITH GAS AND OIL RESISTANT INSULATION
2. WIRE SHALL BE STRAPPED TO ALL PVC FORCE MAIN PIPING WITH DUCT TAPE AT 12-FT. INTERVALS.
3. SECURE WIRE TO ALL TEE AND CROSS FITTINGS.
4. ALL WIRE SPLICES SHALL HAVE WATER PROOF WIRE CONNECTIONS.

TRACER WIRE DETAIL

NOT TO SCALE

GENERAL NOTES:
1. NO EXCAVATED MATERIAL SHALL BE PLACED IN ANY STREAM, DITCH OR DRAINAGE-WAY.
2. THE CONTRACTOR IS RESPONSIBLE FOR LOCATING ALL UNDERGROUND UTILITIES BEFORE ANY CONSTRUCTION BEGINS.
3. THE CONTRACTOR IS RESPONSIBLE FOR TEMPORARY SEDIMENT AND EROSION CONTROL MEASURES WHILE CONSTRUCTION IS IN PROGRESS.
4. THE CONTRACTOR IS RESPONSIBLE FOR STABILIZATION OF ALL DISTURBED AREAS.
5. THE CONTRACTOR IS RESPONSIBLE FOR LAY DOWN AND STOCKPILE AREAS (TO ARRANGE AND ENSURE COMPLIANCE WITH ALL LOCAL AND STATE REGULATIONS).

THE DETAILS SHOWN HEREON SUPERCEDE CFPUA WRITTEN TECHNICAL SPECIFICATIONS VERSIONS 1.00 - 1.04

REV:	DESCRIPTION:	DATE:

NORTH CAROLINA PROFESSIONAL CIVIL 035107 ENGINEER NICHOLAS J. LAURETTA
12/29/15

CFPUA SANITARY SEWER

STANDARD DETAILS

CAPE FEAR PUBLIC UTILITY AUTHORITY
235 GOVERNMENT CENTER DRIVE
WILMINGTON, NC 28403
OFFICE: (910)332-6560
Stewardship. Sustainability. Service.

DATE: 1/9/12
SCALE: N/A
DRAWN BY: CFPUA
CHECKED BY: CFPUA
PROJECT NO. :

SHEET NO: SSD-3

S:\3725\0124 Marina Village\90-Drawings\Phase 1B\CG-503.dwg, 1/14/2016 11:02:19 AM, AMendenhall

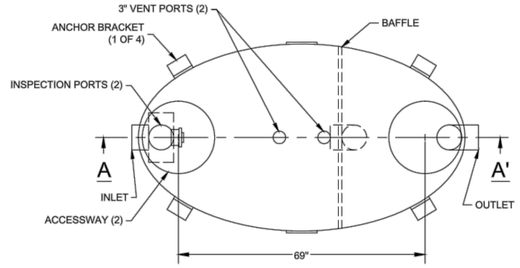

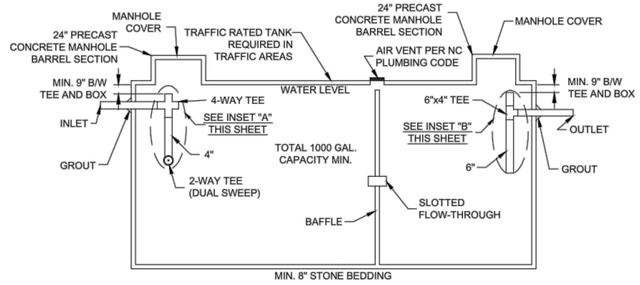

CONCRETE GREASE INTERCEPTOR

NOT TO SCALE

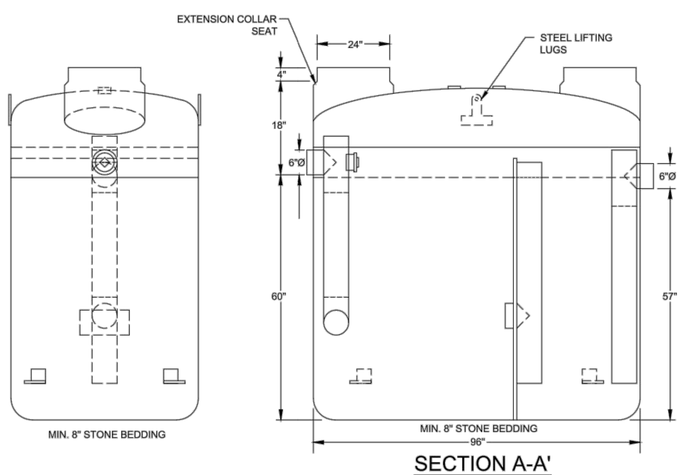

SECTION A-A'

NOTES:
1. FOR GRAVITY APPLICATIONS ONLY
2. MIN. THICKNESS: 1/4" WALL AND 3/8" TOP AND BOTTOM BOWLS
3. STANDARD PIPE STUBS ARE SOCKET SDR 35 PVC
4. EXTENSION COLLARS SHALL BE CAULKED WITH SIKAFLEX OR EQUIVALENT FOR WATERTIGHT SEAL
5. FOLLOW MANUFACTURE'S SPECS FOR TRAFFIC OR PEDESTRIAN LOADING

FIBERGLASS GREASE INTERCEPTOR

NOT TO SCALE

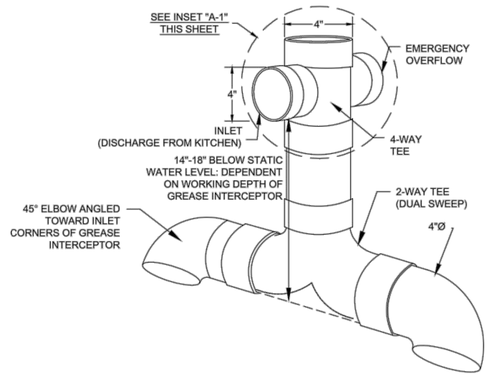

GREASE INTERCEPTOR INSET "A" 4" SANITARY TEE

NOT TO SCALE

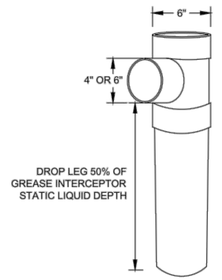

GREASE INTERCEPTOR INSET "B" 6" X 6" X 4" OUTLET SANITARY TEE

NOT TO SCALE

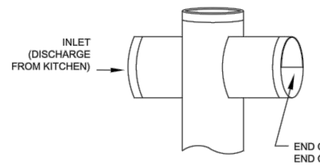

GREASE INTERCEPTOR INSET "A-1" EMERGENCY OVERFLOW CLOSE-UP

NOT TO SCALE

GENERAL NOTES:

1. NO EXCAVATED MATERIAL SHALL BE PLACED IN ANY STREAM, DITCH OR DRAINAGE-WAY.
2. THE CONTRACTOR IS RESPONSIBLE FOR LOCATING ALL UNDERGROUND UTILITIES BEFORE ANY CONSTRUCTION BEGINS.
3. THE CONTRACTOR IS RESPONSIBLE FOR TEMPORARY SEDIMENT AND EROSION CONTROL MEASURES WHILE CONSTRUCTION IS IN PROGRESS.
4. THE CONTRACTOR IS RESPONSIBLE FOR STABILIZATION OF ALL DISTURBED AREAS.
5. THE CONTRACTOR IS RESPONSIBLE FOR LAY DOWN & STOCKPILE AREAS (TO ARRANGE AND INSURE COMPLIANCE WITH ALL LOCAL AND STATE REGULATIONS).

THE DETAILS SHOWN HEREON SUPERCEDE CFPUA WRITTEN TECHNICAL SPECIFICATIONS VERSIONS 1.00 - 1.04

REV:	DESCRIPTION:	DATE:

CFPUA SANITARY SEWER

STANDARD DETAILS

NORTH CAROLINA PROFESSIONAL ENGINEER SEAL 035107 NICHOLAS J. LAURETTA
12/29/15

CAPE FEAR PUBLIC UTILITY AUTHORITY
235 GOVERNMENT CENTER DRIVE
WILMINGTON, NC 28403
OFFICE: (910)332-6560
Stewardship. Sustainability. Service.

DATE: 1/9/12
SCALE: N/A
DRAWN BY: CFPUA
CHECKED BY: CFPUA
PROJECT NO. :

SHEET NO: SSD-4

S:\2735\0124 Marina Village\60\Drawings\Phase 1B\CG-503.dwg, 1/14/2016 11:02:20 AM, AMendenhall