RIVERLIGHTS
CONVENTIONAL PHASE II (SF-2)
CITY OF WILMINGTON, NC
JANUARY 2016
TECHNICAL REVIEW COMMITEE RE-SUBMITTAL

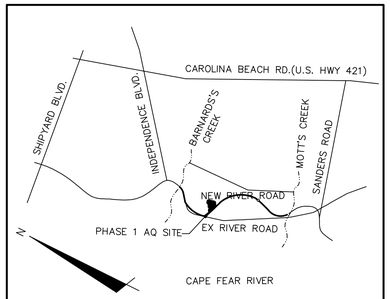

VICINITY MAP
NOT TO SCALE

COUNTY AND AGENCY CONTACTS

A. City of Wilmington
Planning Department
102 North Third Street
PO BOX 1810
Wilmington, NC 28402-1810
(910)341-3255
Contact: Ron Satterfield
Email: Ron.Satterfield@wilmingtonnc.gov

B. City of Wilmington
Engineering
212 Operations Center Drive
PO BOX 1810
Wilmington, NC 28402-1810
(910) 341-7807
Contact: Rob Gordon
Email: Rob.Gordon@wilmingtonnc.gov

C. New Hanover County
Sediment and Erosion Control
230 Government Center Drive, Suite 160
Wilmington, NC 28403
(910) 798-7432
Contact: Beth Wetherill
Email: BWetherill@nhcgov.com

D. Cape Fear Public Utility Authority
235 Government Center Drive
Wilmington, NC 28403
(910) 332-6626
Contact: David Dailey
Email: David.Dailey@cfpua.org

E. NCDENR
Division of Environmental Health
Public Water Supply Section
1634 Mail Service Center
Raleigh, NC 27699-1634
(919) 707-9051
Contact: Tammy Kaufman
Email: tammy.kaufman@ncdenr.gov

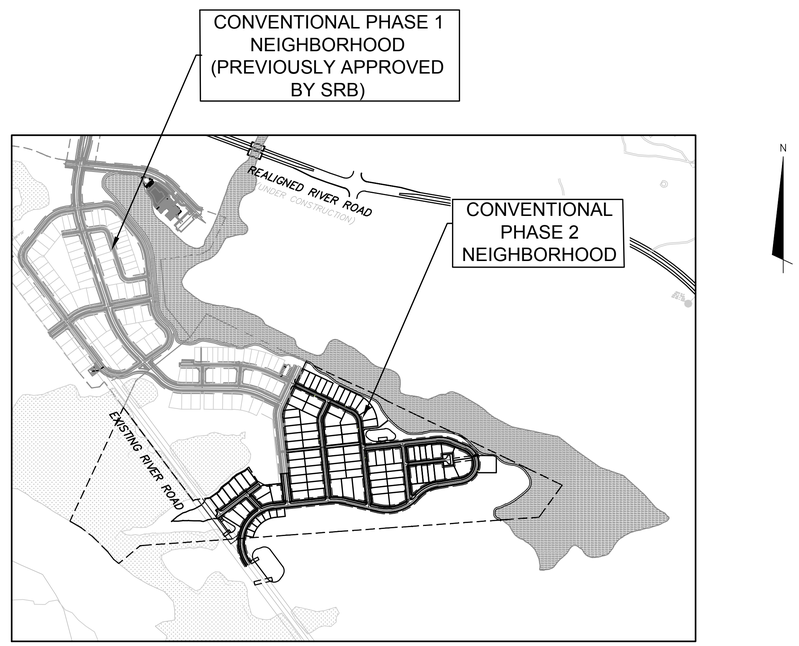

VICINITY MAP
1"=500'

PROJECT DATA

NAME OF PROJECT:
RIVERLIGHTS- CONVENTIONAL PHASE 2 NEIGHBORHOOD (SF-2)
WILMINGTON, NORTH CAROLINA

OWNER/DEVELOPER:
NNP IV-CAPE FEAR RIVER, LLC
3410 RIVER ROAD, SUITE 103
WILMINGTON, NC 28412
PHONE: (704)813-8697
CONTACT: DOUG BROWN

PREPARED BY:
MCKIM & CREED, INC
243 NORTH FRONT ST
WILMINGTON, NC 28401
PHONE: (910)343-1048
FAX: (910)251-8282
CONTACT: KATHRYN ESPINOZA, PE
EMAIL: KESPINOZA@MCKIMCREED.COM

NORTH AMERICA SEKISUI HOUSE, LLC

RIVERLIGHTS™ by Newland COMMUNITIES

Know what's **below.** **Call** before you dig.

McKIM&CREED
243 North Front Street
Wilmington, North Carolina 28401
Phone: (910)343-1048 , Fax: (910)251-8282
License: F-1222
www.mckimcreed.com

FINAL DRAWINGS - FOR REVIEW PURPOSES ONLY

SHEET INDEX

SHEET NUMBER	SHEET TITLE	SHEET DESCRIPTION
1	G-001	COVER SHEET
2	G-002	NOTES
3	CX-101	EXISTING CONDITIONS/SITE INVENTORY PLAN
4	CX-102	TREE REMOVAL & PRESERVATION PLAN
5	CE-101	EROSION CONTROL PLAN PHASE 1
6	CE-102	EROSION CONTROL PLAN PHASE 2
7	CG-101	STORM DRAINAGE AND GRADING PLAN
8	CG-102	STORM DRAINAGE AND GRADING PLAN
9	CS-100	OVERALL SITE PLAN
10	CS-101	SITE PLAN
11	CS-102	SITE PLAN
12	CU-101	UTILITY PLAN
13	CU-102	UTILITY PLAN
14	CU-701	WORTHYLAKE RUN PLAN AND PROFILE STA 10+00 TO STA 17+20
15	CU-702	WAVES POINTE PLAN AND PROFILE STA 10+00 TO STA 21+61
16	CU-703	TRISAIL TERRACE PLAN AND PROFILE STA 10+00 TO STA 24+00
17	CU-704	TRISAIL TERRACE PLAN AND PROFILE STA 24+00 TO STA 39+63
18	CU-705	WATERTAXI ROW BACHE COURT PLAN AND PROFILE
19	CU-706	FULL SWEEP LANE BOTANY BAY PLACE PLAN AND PROFILE
20	CU-707	ENDURANCE TRAIL PLAN AND PROFILE STA 17+76 TO STA 20+00
21	CT-301	TYPICAL CROSS SECTIONS
22	CE-501	EROSION AND SEDIMENT CONTROL DETAILS
23	CE-502	EROSION AND SEDIMENT CONTROL DETAILS
24	CG-501	STORM DRAINAGE DETAILS
25	CG-502	STORM DRAINAGE DETAILS
26	CG-503	STORM DRAINAGE DETAILS
27	CS-501	SITE DETAILS
28	CS-502	SITE DETAILS
29	CU-501	UTILITY DETAILS
30	CU-502	UTILITY DETAILS
31	CU-503	UTILITY DETAILS
32	CU-504	UTILITY DETAILS
33	CU-505	UTILITY DETAILS
34	CU-506	UTILITY DETAILS
35	CN-501	STORMWATER MANAGEMENT DETAILS
36	CN-502	STORMWATER MANAGEMENT DETAILS
37	CN-503	STORMWATER MANAGEMENT DETAILS
38	L-160	OVERALL SHEET REFERENCE PLAN
39	L-161	STREET TREE PLAN
40	L-162	STREET TREE PLAN
41	L-501	DETAILS

PHASE II
02735-0141
JANUARY 2016

CONSTRUCTION NOTES

1. CONSTRUCTION AND MATERIALS SHALL BE IN ACCORDANCE WITH THE CITY OF WILMINGTON STANDARDS AND SPECIFICATIONS.
2. CONTRACTOR IS FULLY RESPONSIBLE FOR ACQUIRING THE LOCATION OF EXISTING UTILITIES FROM THE APPROPRIATE PARTIES PRIOR TO CONSTRUCTION.
3. CONTRACTOR IS RESPONSIBLE FOR PLACING BARRICADES, USING FLAGMEN, ETC. AS NECESSARY TO INSURE SAFETY TO THE PUBLIC.
4. THESE DRAWINGS SHOW INFORMATION OBTAINED FROM THE AVAILABLE RECORDS REGARDING PIPES, CONDUITS, TELEPHONE LINES, AND OTHER STRUCTURES AND CONDITIONS WHICH EXIST ALONG THE LINES OF WORK AND BELOW THE SURFACE OF THE GROUND. THE OWNER AND ENGINEER DISCLAIM ANY RESPONSIBILITIES FOR THE ACCURACY OR COMPLETENESS OF SAID INFORMATION, AND SUCH INFORMATION IS BEING SHOWN ONLY FOR THE CONVENIENCE OF THE CONTRACTOR WHO MUST VERIFY THE INFORMATION TO HIS OWN SATISFACTION DURING THE BIDDING AND CONSTRUCTION PHASES. IF THE CONTRACTOR RELIES ON SAID INFORMATION, HE DOES SO AT HIS OWN RISK. THE GIVING OF THE INFORMATION ON THE CONTRACT DRAWINGS WILL NOT RELIEVE THE CONTRACTOR OF HIS OBLIGATIONS TO SUPPORT AND PROTECT ALL PIPES, CONDUITS, TELEPHONE LINES, AND OTHER STRUCTURES, WHETHER ABOVE OR BELOW GRADE.
5. SHOULD ANY DAMAGE OCCUR TO EXISTING UTILITIES, IT SHALL BE REPAIRED SOLELY AT THE CONTRACTOR'S EXPENSE.
6. THE CONTRACTOR SHALL VERIFY EXISTING INVERTS PRIOR TO CONSTRUCTION OF UNDERGROUND UTILITIES. TEST PITTING OF EXISTING LINES PRIOR TO CONSTRUCTION, IF NECESSARY, SHALL BE COORDINATED WITH THE OWNER.
7. ALL MATERIALS AND METHODS OF CONSTRUCTION SHALL CONFORM TO THE DRAWINGS, PROJECT SPECIFICATIONS, AND LOCAL BUILDING CODES.
8. ALL DISTURBED AREAS SHALL BE SMOOTHLY GRADED TO PROMOTE POSITIVE DRAINAGE AND STABILIZED WITH TOPSOIL, SEED, AND MULCH. IF SETTLEMENT OCCURS, TOPSOIL, SEEDING, AND MULCH SHALL BE REPEATED UNTIL SETTLEMENT SUBSIDES. (SEE EROSION AND SEDIMENT CONTROL DETAILS AND SPECIFICATIONS.)
9. WATER MAINS WILL BE INSTALLED AT A DEPTH THAT WILL PROVIDE 36" COVER OVER THE PIPES BELOW PROPOSED GRADE UNLESS SHOWN OTHERWISE ON THESE PLANS OR DIRECTED OTHERWISE BY THE ENGINEER.
10. WHEREVER SEWER OR WATER MAINS CROSS ONE ANOTHER, A MINIMUM VERTICAL CLEARANCE OF 18" SHALL BE PROVIDED BETWEEN THE BOTTOM OF THE WATER PIPE AND THE TOP OF THE SEWER PIPE.
11. WHEREVER SEWER OR WATER MAINS RUN PARALLEL TO EACH OTHER, A MINIMUM HORIZONTAL SEPARATION OF 10' SHALL BE PROVIDED, OR 18" VERTICAL SEPARATION.
12. IF NEITHER OF THESE CONDITIONS (#10 OR #11 ABOVE) CAN BE MET, THEN THE SEWER SHALL BE CLASS 50 DIP, MINIMUM OF 20 LF CENTERED OVER THE CROSSING.
13. ALL WATER VALVES, BOXES, AND FIRE HYDRANT ASSEMBLES SHALL BE SET AND ADJUSTED TO FINISHED GRADE.
14. THE OWNER IS RESPONSIBLE FOR THE ACQUISITION OF ALL EASEMENTS, BOTH TEMPORARY AND PERMANENT.
15. THE CONTRACTOR SHALL VERIFY HORIZONTAL AND VERTICAL SURVEY CONTROL PRIOR TO STAKING OUT CONSTRUCTION. ANY DISCREPANCIES SHALL BE BROUGHT TO THE ATTENTION OF THE ENGINEER PRIOR TO PROCEEDING WITH WORK.
16. ANY PROPERTY LINE MONUMENTATION DISTURBED DURING CONSTRUCTION SHALL BE REPLACED SOLELY AT THE CONTRACTOR'S EXPENSE.
17. THE CONTRACTOR ASSUMES ALL RESPONSIBILITY FOR ANY DEVIATION FROM THESE PLANS.
18. FIRE HYDRANTS SHALL BE PLACED A MINIMUM DISTANCE OF 6 FEET FROM BACK OF CURB AND SHALL HAVE A CLEAR SPACE OF 3 FEET FROM ANY PERMANENT STRUCTURE PER CFPUA STANDARDS.
19. ALL SELECT AND BORROW MATERIAL SHALL MEET CRITERIA SET FORTH BY SECTIONS 1016 AND 1018 OF THE NORTH CAROLINA DEPARTMENT OF TRANSPORTATION'S STANDARDS AND SPECIFICATIONS FOR ROADS AND STRUCTURES. SEE SECTION FOR PLACEMENT AND COMPACTION INFORMATION.
20. THE ENGINEER AND THE CONTRACTOR SHALL INSPECT ALL EXISTING PIPES USED IN THE FINAL DRAINAGE SYSTEM AND AGREE ON THE CONDITION OF THE PIPES PRIOR TO CONSTRUCTION. IF DAMAGE OCCURS TO THESE PIPES DURING CONSTRUCTION, THE CONTRACTOR SHALL BE RESPONSIBLE FOR THE REPAIR OR REPLACEMENT OF THE PIPE(S).
21. EXISTING PAVING, CONCRETE, AND OTHER UNSUITABLE MATERIALS INCLUDING UNDERCUT EXCAVATION SHALL NOT BE USED AS FILL MATERIAL AND SHALL BE DISPOSED OF OUTSIDE THE PROJECT LIMITS AT THE CONTRACTOR'S EXPENSE. THE CONTRACTOR IS RESPONSIBLE FOR ALL PERMITTING AND FEES FOR DISPOSAL.
22. ALL TREES, STUMPS, ROOT MAT, ETC. SHALL BE ENTIRELY REMOVED REGARDLESS OF DEPTH. BURIAL OF ORGANIC MATERIAL WITHIN THE PROJECT LIMITS IS NOT PERMITTED. OPEN BURNING OF DOWNED TREES AND STUMPS IS NOT PERMITTED. CHIPPED MATERIALS MUST BE REMOVED PRIOR TO THE PLACEMENT OF EMBANKMENT OR TOPSOIL.
23. THE CONTRACTOR IS SOLELY RESPONSIBLE TO OBTAIN OFF-SITE SPOIL AREAS FOR DISPOSAL OF EXCESS AND/OR UNSUITABLE MATERIALS AS NECESSARY. OFF-SITE SPOIL AREAS MUST BE SUBMITTED TO THE ENGINEER AND APPLICABLE REGULATORY AGENCIES PRIOR TO UTILIZATION BY THE CONTRACTOR. NO AREAS DESIGNATED AS WETLANDS WILL BE PERMITTED FOR USE AS A DISPOSAL SITE. THE CONTRACTOR SHALL SUBMIT DOCUMENTATION TO THE ENGINEER THAT NO WETLANDS WILL BE IMPACTED. THE ENGINEER WILL NOT CONSIDER ANY DELAYS OR MONETARY CLAIMS OF ANY NATURE RESULTING FROM THE CONTRACTOR'S FAILURE OR DIFFICULTY IN FINDING NECESSARY DISPOSAL SITES TO MEET THE TIME FRAMES AND CAPACITIES REQUIRED. THE CONTRACTOR SHALL BE RESPONSIBLE FOR ALL PLANS, PERMITS, EROSION AND SEDIMENT CONTROL MEASURES, ETC. REQUIRED BY THE APPROPRIATE REGULATORY AGENCIES FOR UTILIZING OFF-SITE SPOIL AREAS. THE CONTRACTOR SHALL CERTIFY TO THE ENGINEER THAT ALL REQUIRED PERMITS HAVE BEEN OBTAINED PRIOR TO UTILIZING THE OFF-SITE SPOIL AREAS. ALL COSTS FOR PROCURING AND UTILIZING THE OFF-SITE SPOIL AREAS ARE TO BE INCIDENTAL TO THE BASE BID.

GROUND STABILIZATION CRITERIA

SITE AREA DESCRIPTION	STABILIZATION TIMEFRAME	STABILIZATION TIMEFRAME EXCEPTIONS
PERIMETER DIKES, SWALES, DITCHES AND SLOPES	7 DAYS	NONE
HIGH QUALITY WATER ZONES	7 DAYS	NONE
SLOPES STEEPER THAN 3:1	7 DAYS	IF SLOPES ARE 10 FT OR LESS IN IN LENGTH AND ARE NOT STEEPER THAN 2:1, 14 DAYS ARE ALLOWED
SLOPES 3:1 OR FLATTER	14 DAYS	7 DAYS FOR SLOPES GREATER THAN 50 FT IN LENGTH
ALL OTHER AREAS WITH SLOPES FLATTER THAN 4:1	14 DAYS	NONE (EXCEPT FOR PERIMETERS AND HQW ZONES)

DEMOLITION NOTES

1. THE CONTRACTOR SHALL VISIT THE SITE TO BECOME FAMILIARIZED WITH FIELD DEMOLITION CONDITIONS.
2. THE CONTRACTOR IS RESPONSIBLE FOR THE PROPER DISPOSAL OF ALL DEMOLISHED DEBRIS ASSOCIATED WITH THE PROJECT IN ACCORDANCE WITH THE PROJECT SPECIFICATIONS.
3. THE CONTRACTOR IS RESPONSIBLE FOR CONTROLLING DUST GENERATED BY THE WORK, INCLUDING BUT NOT LIMITED TO DEMOLITION AND CONSTRUCTION ACTIVITIES, SITE VEHICULAR TRAFFIC AND RELATED OPERATIONS.
4. THE CONTRACTOR IS RESPONSIBLE FOR HAVING ALL EXISTING UTILITIES LOCATED PRIOR TO BEGINNING ANY DEMOLITION. CONTRACTOR SHALL CONTACT NC ONE CALL AT LEAST 72 HOURS PRIOR TO BEGINNING CONSTRUCTION OR EXCAVATION TO HAVE EXISTING UTILITIES LOCATED.
5. EXISTING UTILITIES AND STRUCTURES SHOWN, BOTH UNDERGROUND AND ABOVE GROUND, ARE BASED ON FIELD SURVEY AND THE BEST AVAILABLE RECORD DRAWINGS. THE CONTRACTOR SHALL VERIFY FIELD CONDITIONS PRIOR TO BEGINNING RELATED CONSTRUCTION. ANY DISCREPANCIES SHALL BE REPORTED TO THE OWNER'S REPRESENTATIVE AND ENGINEER IMMEDIATELY.
6. THE CONTRACTOR IS RESPONSIBLE FOR THE COORDINATION OF DISCONNECTING AND ABANDONING ALL EXISTING UTILITIES WITH THE OWNER UNLESS OTHERWISE NOTED. ALL EXISTING UTILITIES AND ASSOCIATED PIPING, ETC. NOT IN USE ON THE SITE SHALL BE PROPERLY ABANDONED AND REMOVED AS REQUIRED. COORDINATE WITH THE OWNER.
7. THE CONTRACTOR IS RESPONSIBLE FOR THE PROTECTION OF ANY EXISTING UTILITIES THAT REMAIN IN SERVICE DURING DEMOLITION.
8. THE CONTRACTOR IS RESPONSIBLE FOR STABILIZATION OF ALL DISTURBED AREAS AND SLOPES ON AND OFF SITE IN ACCORDANCE WITH THE EROSION CONTROL MEASURES SPECIFIED ON THE PLANS AND IN THE SPECIFICATIONS. THE CONTRACTOR SHALL COORDINATE WITH THE OWNER TO DETERMINE WHO IS RESPONSIBLE FOR PROVIDING THE PERMANENT STABILIZATION MEASURES AND THE TYPE OF PERMANENT MEASURES PRIOR TO BEGINNING DEMOLITION AND CONSTRUCTION. THE PERMANENT STABILIZATION MEASURES SHALL BE IN PLACE AND ACCEPTABLE TO THE OWNER'S REPRESENTATIVE AND ENGINEER PRIOR TO PROJECT CLOSEOUT. COORDINATE INSPECTION WITH THE OWNER AND ENGINEER PRIOR TO PROJECT CLOSEOUT.
9. THE CONTRACTOR IS RESPONSIBLE FOR COORDINATING AND CONTACTING THE ENGINEER FOR THE REQUIRED INSPECTIONS ON THE PROJECT.
10. WETLANDS DO EXIST ON SITE AND ARE NOTED ON THE PLANS. UNLESS OTHERWISE INDICATED, THE WETLANDS SHALL NOT BE DISTURBED DURING CONSTRUCTION OF THIS PROJECT.

EXCAVATION, GRADING, AND BACKFILLING NOTES

1. ANY UNDERCUTTING IN GOOD SOIL SHALL BE REPLACED AND THE REPLACEMENT MATERIAL SHALL BE COMPACTED TO NINETY-FIVE (95) PERCENT OF MAXIMUM DENSITY OBTAINED AT OPTIMUM MOISTURE CONTENT, AS DETERMINED BY THE ASTM D 698 STANDARD PROCTOR TEST METHOD. IN THE EVENT THAT MATERIAL ENCOUNTERED AT PIPE GRADE, SUBGRADE OF PARKING OR ROADWAYS AND SUBGRADE OF BUILDING FOUNDATIONS IS FOUND TO BE SOFT, SPONGY, OR IN ANY OTHER WAY UNSUITABLE, THE CONTRACTOR SHALL NOTIFY THE GEOTECHNICAL ENGINEER IMMEDIATELY. SUCH UNSUITABLE MATERIAL SHALL BE REMOVED TO A DEPTH AS SPECIFIED BY THE GEOTECHNICAL ENGINEER AND REPLACED WITH A MINIMUM OF SIX (6) INCHES OF STONE, OR AS DIRECTED BY THE GEOTECHNICAL ENGINEER.
2. BEFORE BACKFILLING IS COMMENCED OVER PIPES AND OTHER INSTALLATIONS, EARTH FILL SHALL BE SOLIDLY TAMPED AROUND AND ABOVE THE PIPE TO A DEPTH OF ONE (1) FOOT ABOVE THE TOP OF THE PIPE. CARE SHALL BE TAKEN TO PREVENT ANY DISTURBANCE TO THE PIPE OR DAMAGE TO NEWLY MADE JOINTS. THE FILLING OF THE TRENCH SHALL BE CARRIED OUT SIMULTANEOUSLY ON BOTH SIDES OF THE PIPES IN SUCH A MANNER THAT INJURIOUS SIDE PRESSURES DO NOT OCCUR.
3. THE MATERIAL FOR BACKFILLING SHALL BE FREE FROM ALL PERISHABLE AND OBJECTIONABLE MATERIALS. BEFORE PLACING ANY BACKFILL, ALL RUBBISH, FORM, BLOCKS, WIRES OR OTHER UNSUITABLE MATERIAL SHALL BE REMOVED FROM EXCAVATION. THE BACK-FILLING OVER PIPES SHALL BE PLACED IN LAYERS NOT OVER SIX (6) INCHES THICK AND COMPACTED TO A MINIMUM DENSITY OF NINETY-FIVE (95) PERCENT OF THE MAXIMUM DRY DENSITY AS DETERMINED BY THE MODIFIED PROCTOR COMPACTION TEST TO A DEPTH OF 12 INCHES BELOW FINISHED GRADE. THE LAST 12 INCHES OF BACKFILL SHALL BE PLACED IN LAYERS NOT OVER SIX (6) INCHES THICK AND COMPACTED TO A MINIMUM DENSITY OF NINETY-EIGHT (98) PERCENT OF THE MAXIMUM DRY DENSITY AS DETERMINED BY THE MODIFIED PROCTOR COMPACTION TEST.

STORM DRAINAGE AND GRADING NOTES

1. IN ACCORDANCE WITH NC GENERAL STATUTES, NPDES REGULATIONS, AND NCDENR REQUIREMENTS, STORMWATER DISCHARGE OUTFALLS SHALL BE INSPECTED BY THE CONTRACTOR. INSPECTIONS SHALL BE PERFORMED BY THE CONTRACTOR AFTER EACH STORM EVENT OF 1/2 INCH OR GREATER, WITH ONE WEEKLY INSPECTION MINIMUM. NCDENR STANDARD INSPECTION REPORTS SHALL BE PREPARED AND SIGNED WITH COPIES PROVIDED TO THE OWNER, ARCHITECT, AND ENGINEER, BY THE CONTRACTOR.
2. INLET PROTECTION SHALL BE INSTALLED AROUND OUTFALL. DEVICES SHALL BE CONSTRUCTED TO FINAL PROPOSED CONDITION UPON STABILIZATION OF CONTRIBUTING GROUND SURFACES AND REMOVAL OF SEDIMENT FROM STORM PIPES.
3. ALL DIMENSIONS AND GRADES SHOWN ON THE PLANS SHALL BE FIELD VERIFIED BY THE CONTRACTOR PRIOR TO CONSTRUCTION. CONTRACTOR SHALL NOTIFY CONSTRUCTION MANAGER IF ANY DISCREPANCIES EXIST PRIOR TO PROCEEDING WITH CONSTRUCTION FOR NECESSARY PLAN OR GRADE CHANGES. NO EXTRA COMPENSATION SHALL BE PAID TO CONTRACTOR FOR ANY WORK DONE DUE TO DIMENSIONS OR GRADES SHOWN INCORRECTLY ON THESE PLANS IF SUCH NOTIFICATION HAS NOT BEEN GIVEN.
4. UNLESS OTHERWISE NOTED, GRADES AND SPOT ELEVATIONS NOTED ON PLANS INDICATE FINISHED GRADE OR PAVEMENT SURFACE. ALL DIMENSIONS ARE MEASURED TO THE BACK OF CURB UNLESS OTHERWISE INDICATED.

UTILITY NOTES

1. SCHEDULE A PRECONSTRUCTION MEETING WITH CAPE FEAR PUBLIC UTILITY AUTHORITY 48 HOURS PRIOR TO CONSTRUCTION OF WATER AND SEWER LINES.
2. WATER AND SANITARY SEWER UTILITY MAINS ARE PRIVATE BEYOND THE PUBLIC STREET RIGHT-OF-WAY.
3. THIS PROJECT SHALL COMPLY WITH THE CFPUA CROSS CONNECTION CONTROL REQUIREMENTS. WATER METER(S) CANNOT BE RELEASED UNTIL ALL REQUIREMENTS ARE MET AND NCDENR HAS ISSUED THE "FINAL APPROVAL".
4. ALL COMMERCIAL WATER SERVICES AND ANY IRRIGATION SYSTEMS SUPPLIED BY CFPUA WATER SHALL HAVE A BACKFLOW PREVENTION DEVICE ACCEPTABLE TO CFPUA AND APPROVED BY USCFCCCHR OR ASSE.
5. BACKFLOW PREVENTION AND METERS WILL BE PROVIDED FOR BOTH FIRE LINES (RPDA) AND DOMESTIC SERVICE (RPZ). FIRE LINE BACKFLOW PREVENTER AND DOMESTIC SERVICE BACKFLOW PREVENTER WILL BE LOCATED AS SHOWN ON THE UTILITY PLANS. INSTALLER OF BACKFLOW PREVENTERS MUST CONTACT CFPUA PRIOR TO INSTALLING UNITS TO GIVE CFPUA THE OPTION TO VERIFY INSTALLATION PROCEDURES.
   - 5.1. REDUCED PRESSURE PRINCIPLE ASSEMBLY FOR DOMESTIC WATER SERVICE
   - 5.2. REDUCE PRESSURE DETECTOR ASSEMBLY WILL BE UTILIZED FOR THE BACKFLOW PREVENTER ON THE FIRE SERVICE.
6. IF THE CONTRACTOR DESIRES CFPUA WATER FOR CONSTRUCTION HE SHALL APPLY IN ADVANCE FOR THIS SERVICE AND MUST PROVIDE A REDUCED PRESSURE ZONE (RPZ) BACKFLOW PREVENTION DEVICE ON THE DEVELOPER'S SIDE OF THE WATER METER BOX.
7. WATER: 1.5" & 2" PVC MAINS SHALL BE CONSTRUCTED USING ASTM D2241, IPS, GASKETED PIPE, SDR 21. 4"-12" PVC MAINS AND SERVICES SHALL BE CONSTRUCTED USING AWWA C-900 PVC, CL235 (DR-18).
8. SANITARY SEWER: FOR PIPE SIZES 4" AND 6" PIPE SHALL BE SCH 40 CONFORMING TO THE REQUIREMENTS OF ASTM D1785 WITH SOLVENT WELD JOINTS CONFORMING TO ASTM D2672. FOR PIPE SIZES 8" THROUGH 12", PIPE SHALL BE CLASS 150, DR18 CONFORMING TO THE REQUIREMENTS OF AWWA C900 WITH ELASTOMERIC PUSH-ON JOINTS CONFORMING TO ASTM D3212 OR ASTM D3139.
9. WATER AND SEWER SERVICES CANNOT BE ACTIVATED ON NEW MAINS UNTIL ENGINEER'S CERTIFICATION AND AS-BUILTS ARE RECEIVED AND "FINAL APPROVAL" ISSUED BY PUBLIC WATER SUPPLY SECTION OF NCDENR AND "FINAL ENGINEERING CERTIFICATION" ISSUED BY DIVISION OF WATER QUALITY OF NCDENR.
10. PVC WATER MAINS AND POLYETHYLENE SERVICES ARE TO BE MARKED WITH NO. 10 SINGLE STRAND INSULATED COPPER WIRE INSTALLED THE ENTIRE LENGTH AND STRAPPED TO THE PIPES WITH DUCT TAPE. THE INSULATED WIRE IS TO BE STRIPPED TO BARE WIRE AND SECURED TO ALL VALVES. THIS WIRE IS TO BE ACCESSIBLE AT ALL FIRE HYDRANTS AND WATER METER BOXES TO AID IN FUTURE LOCATION OF FACILITIES.
11. SITE UTILITY CONTRACTOR TO PROVIDE WATER AND SANITARY SEWER SERVICE TO WITHIN 5 FEET OF THE BUILDING. CONTRACTOR SHALL COORDINATE SITE PLAN CONNECTIONS WITH THE ARCHITECTURAL BUILDING PLANS.
12. MAXIMUM BENDING RADIUS FOR 8" C-900 PVC WATER MAIN BENDS IS 380' (ONE-HALF MANUFACTURER'S RECOMMENDED ALLOWABLE LONGITUDINAL BENDING).
13. UNDERGROUND UTILITIES: ALL NEW UTILITIES SHALL BE INSTALLED UNDERGROUND, EXCEPT WHERE SUCH PLACEMENT IS PROHIBITED OR DEEMED IMPRACTICAL BY THE UTILITY PROVIDER. UNDERGROUND TERMINAL FACILITIES FOR STREET LIGHTING ALONG THE PUBLIC STREETS ABUTTING THE SUBJECT SITE SHALL BE INSTALLED BY THE DEVELOPER.
14. MINIMUM OF 36" COVERAGE ABOVE ALL WATERMAINS.
15. MINIMUM OF 36" VERTICAL SEPARATION BETWEEN WATERLINES AND STORMDRAIN CURB INLETS
16. A VARIANCE IS NOT ANTICIPATED FROM ANY NORTH CAROLINA DIVISION OF WATER QUALITY (DWQ) REQUIREMENT.
17. PLANS ARE IN COMPLIANCE WITH CAPE FEAR PUBLIC UTILITY AUTHORITY TECHNICAL STANDARDS AND SPECIFICATIONS.

RELATION OF WATER MAINS TO SANITARY SEWERS:

1. LATERAL SEPARATION OF SANITARY SEWERS AND WATER MAINS: WATER MAINS SHALL BE LAID AT LEAST 10 FEET LATERALLY FROM EXISTING OR PROPOSED SEWERS UNLESS LOCAL CONDITIONS OR BARRIERS PREVENT A 10 FOOT LATERAL SEPARATION, IN WHICH CASE:
   - 1.1. THE WATER MAIN IS LAID IN A SEPARATE TRENCH, WITH THE ELEVATION OF THE BOTTOM OF THE WATER MAIN AT LEAST 18 INCHES ABOVE THE TOP OF THE SEWER, OR
   - 1.2. THE WATER MAIN IS LAID IN THE SAME TRENCH AS THE SEWER WITH THE WATER MAIN LOCATED AT ONE SIDE ON A BENCH OF UNDISTURBED EARTH, AND ABOVE THE TOP OF THE SEWER.
2. CROSSING A WATER MAIN OVER A SEWER MAIN: WHENEVER IT IS NECESSARY FOR A WATER MAIN TO CROSS OVER A SEWER THE WATER MAIN SHALL BE LAID AT SUCH AN ELEVATION THAT THE BOTTOM OF THE WATER MAIN IS AT LEAST 24 INCHES ABOVE THE TOP OF THE SEWER MAIN. UNLESS LOCAL CONDITIONS OR BARRIERS PREVENT AN 18 INCH VERTICAL SEPARATION – IN WHICH CASE BOTH THE WATER MAIN AND THE SEWER MAIN SHALL BE CONSTRUCTED OF FERROUS MATERIALS AND WITH JOINTS THAT ARE EQUIVALENT TO WATER MAIN STANDARDS FOR A DISTANCE OF 10 FEET ON EACH SIDE OF THE POINT OF CROSSING.
3. CROSSING A WATER MAIN UNDER A SEWER MAIN: WHENEVER IT IS NECESSARY FOR A WATER MAIN TO CROSS UNDER A SEWER MAIN BOTH THE WATER MAIN AND THE SEWER MAIN SHALL BE CONSTRUCTED OF FERROUS MATERIALS AND WITH JOINTS EQUIVALENT TO WATER MAIN STANDARDS FOR A DISTANCE OF 10 FEET ON EACH SIDE OF THE POINT OF CROSSING.
4. CROSSING A SEWER MAIN/WATER MAIN OVER OR UNDER A STORM DRAIN: WHENEVER IT IS NECESSARY FOR A SEWER MAIN/WATER MAIN TO CROSS A STORM DRAIN PIPE, THE SEWER MAIN/WATER MAIN SHALL BE LAID AT SUCH AN ELEVATION THAT THE OUTSIDE OF THE SEWER MAIN/WATER MAIN NEAREST TO THE OUTSIDE OF THE STORM DRAIN PIPE SHALL MAINTAIN A 24 INCH CLEAR SEPARATION DISTANCE HORIZONTAL, OR THE SEWER MAIN/WATER MAIN SHALL EITHER BE CONSTRUCTED OF DUCTILE IRON PIPE OR ENCASED IN EITHER CONCRETE OR DUCTILE IRON PIPE FOR AT LEAST 5 FEET ON EITHER SIDE OF THE CROSSING.

MATERIALS AND EASEMENT NOTES:

- ALL CATCH BASINS ARE NCDOT STD 840.01
- ALL DROP INLETS ARE NCDOT STD 840.15
- ALL STORM DRAINAGE PIPING TO BE CLASS III RCP, UNLESS OTHERWISE NOTED
- ALL STORM DRAINAGE PIPING CONVEYING DISCHARGE FROM THE PUBLIC RIGHT-OF-WAY SHALL BE CONTAINED WITHIN A PUBLIC DRAINAGE EASEMENT WHOSE WIDTH IS DETERMINED BY THE DEPTH OF BURY
- ALL SANITARY SEWER LINES AND WATERLINES SHALL BE C-900 PVC, UNLESS OTHERWISE NOTED AND MEET CAPE FEAR PUBLIC UTILITY SPECIFICATIONS
- A PUBLIC UTILITY EASEMENT SHALL BE RESERVED WITHIN THE STREET RIGHT-OF-WAY. A 10' NON-MUNICIPAL EASEMENT SHALL BE RESERVED ALONG BOTH SIDES OF ALL STREETS
- WATER AND SANITARY SEWER UTILITIES ARE PUBLIC – CAPE FEAR PUBLIC UTILITY AUTHORITY

EROSION CONTROL NOTES

1. ANY GRADING BEYOND THE DENUDED LIMITS SHOWN ON THE PLAN IS A VIOLATION OF THE COUNTY EROSION CONTROL ORDINANCE AND IS SUBJECT TO A FINE.
2. GRADING MORE THAN ONE ACRE WITHOUT AN APPROVED EROSION CONTROL PLAN IS A VIOLATION OF STATE LAW AND IS SUBJECT TO A FINE. ANY BUILDER THAT ANTICIPATED THE DISTURBANCE OF MORE THAN ONE ACRE WILL BE REQUIRED TO GET AN EROSION CONTROL PERMIT FROM NEW HANOVER COUNTY.
3. GROUND COVER MUST BE PROVIDED ON EXPOSED SLOPES WITHIN 21 CALENDAR DAYS FOLLOWING COMPLETION OF ANY PHASE OF GRADING; AND, A PERMANENT GROUND COVER FOR ALL DISTURBED AREAS WITHIN 15 WORKING DAYS OR 90 CALENDAR DAYS (WHICHEVER IS SHORTER) FOLLOWING COMPLETION OF CONSTRUCTION OR DEVELOPMENT.
4. ADDITIONAL MEASURES TO CONTROL EROSION AND SEDIMENT MAY BE REQUIRED BY A REPRESENTATIVE OF NEW HANOVER COUNTY.
5. SLOPES SHALL BE GRADED NO STEEPER THAN 3:1.
6. ADDITIONAL DEVICES MAY BE REQUIRED AS AGREED UPON BY THE FIELD INSPECTOR, ENGINEER, AND OWNER.
7. IF ACTIVE CONSTRUCTION CEASES IN ANY AREA FOR MORE THAN 15 WORKING DAYS OR 90 CALENDAR DAYS (WHICHEVER IS SHORTER), ALL DISTURBED AREAS MUST BE SEEDED, MULCHED, AND TACKED.
8. WITHIN 24 HOURS FOLLOWING ANY RAIN EVENT, THE CONTRACTOR SHALL INSPECT AND REPAIR, AS NECESSARY, ALL DAMAGED EROSION CONTROL MEASURES.
9. ALL ACTIVITY AND INSTALLATION OF EROSION CONTROL MATTING WILL BE COMPLETE PRIOR TO ANY RAIN EVENT.

EROSION CONTROL MAINTENANCE PLAN:

1. ALL SEDIMENT AND EROSION CONTROL DEVICES SHALL BE INSPECTED AND REPAIRED, AS NECESSARY, EVERY SEVEN (7) DAYS AND WITHIN 24 HOURS OF EVERY ONE-HALF (0.5) INCH OR GREATER RAINFALL.
2. ALL EROSION CONTROL DEVICES SHALL BE PROPERLY MAINTAINED DURING ALL PHASES OF CONSTRUCTION UNTIL THE COMPLETION OF ALL CONSTRUCTION ACTIVITIES AND ALL DISTURBED AREAS HAVE BEEN STABILIZED. ADDITIONAL CONTROL DEVICES MAY BE REQUIRED DURING CONSTRUCTION IN ORDER TO CONTROL EROSION AND/OR OFFSITE SEDIMENTATION. ALL TEMPORARY CONTROL DEVICES SHALL BE REMOVED ONCE CONSTRUCTION IS COMPLETE AND THE SITE IS STABILIZED.
3. SEDIMENT SHALL BE REMOVED FROM BEHIND THE SILT FENCE WHEN IT BECOMES ABOUT 0.5 FEET DEEP. THE SEDIMENT FENCE WILL BE REPAIRED OR REPLACED AS NECESSARY TO MAINTAIN A BARRIER.
4. ALL AREAS WILL BE FERTILIZED, RESEEDED AS NECESSARY, AND MULCHED ACCORDING TO SPECIFICATIONS IN THE VEGETATIVE PLAN TO MAINTAIN A VIGOROUS, DENSE VEGETATIVE COVER.
5. STONE CONSTRUCTION ENTRANCE TO BE CLEANED WHEN SEDIMENT ACCUMULATIONS ARE VISIBLE OR SEDIMENT IS TRACKED ON TO THE PAVEMENT. STONE WILL BE PERIODICALLY TOP DRESSED WITH 2 INCHES OF #4 STONE TO MAINTAIN 6 INCH DEPTH. THE CONTRACTOR SHALL DAILY REMOVE MUD/SOIL FROM PAVEMENT, AS REQUIRED.
6. INSPECT TEMPORARY DIVERSIONS AND CHECK DAMS ONCE A WEEK AND AFTER EVERY RAINFALL. IMMEDIATELY REMOVE SEDIMENT FROM THE FLOW AREA AND REPAIR THE DIVERSION RIDGE AND CHECK DAM. CAREFULLY CHECK OUTLETS AND MAKE TIMELY REPAIRS AS NEEDED. WHEN THE AREA PROTECTED IS PERMANENTLY STABILIZED, REMOVE THE RIDGE AND THE CHANNEL TO BLEND WITH THE NATURAL GROUND LEVEL AND APPROPRIATELY STABILIZE IT.
7. INSPECT TEMPORARY SEDIMENT BASINS AT LEAST WEEKLY AND AFTER EACH SIGNIFICANT (1/2" OR GREATER) RAINFALL EVENT AND REPAIR IMMEDIATELY. REMOVE SEDIMENT AND RESTORE THE BASIN TO ITS ORIGINAL DIMENSIONS WHEN IT ACCUMULATES TO ONE-HALF THE DESIGN DEPTH. PLACE REMOVED SEDIMENT IN AN AREA WITH SEDIMENT CONTROLS.
8. CHECK THE SEDIMENT BASIN EMBANKMENT, SPILLWAYS, AND OUTLET FOR EROSION DAMAGE, AND INSPECT THE EMBANKMENT FOR PIPING AND SETTLEMENT. MAKE ALL NECESSARY REPAIRS IMMEDIATELY. REMOVE ALL TRASH AND OTHER DEBRIS FROM THE RISER AND POOL AREA.
9. INSPECT INLETS AT LEAST WEEKLY AND AFTER EACH SIGNIFICANT (0.5" OR GREATER) RAINFALL EVENT. CLEAR THE MESH WIRE OF ANY DEBRIS OR OTHER OBJECTS TO PROVIDE ADEQUATE FLOW FOR SUBSEQUENT RAINS. TAKE CARE NOT TO DAMAGE OR UNDERCUT THE WIRE MESH DURING SEDIMENT REMOVAL. REPLACE STONE AS NEEDED. INLET PROTECTION SHOULD BE CLEANED OUT WHEN IT IS HALF FULL.
10. INSPECT BAFFLES AT LEAST ONCE A WEEK AND AFTER EACH RAINFALL. MAKE ANY REQUIRED REPAIRS IMMEDIATELY. BE SURE TO MAINTAIN ACCESS TO THE BAFFLES. SHOULD THE FABRIC OF A BAFFLE COLLAPSE, TEAR, DECOMPOSE, OR BECOME INEFFECTIVE, REPLACE IT PROMPTLY. REMOVE SEDIMENT DEPOSITS WHEN IT REACHES HALF FULL TO PROVIDE ADEQUATE STORAGE VOLUME FOR THE NEXT RAIN AND TO REDUCE PRESSURE ON THE BAFFLES. TAKE CARE TO AVOID DAMAGING THE BAFFLES DURING CLEAN OUT. SEDIMENT DEPTH SHOULD NEVER EXCEED HALF THE DESIGNED STORAGE DEPTH. AFTER THE CONTRIBUTING DRAINAGE AREAS HAS BEEN PROPERLY STABILIZED, REMOVE ALL BAFFLE MATERIALS AND UNSTABLE SEDIMENT DEPOSITS, BRING THE AREA TO GRADE, AND STABILIZE IT.
11. INSPECT THE SKIMMER FOR CLOGGING. PULL THE SKIMMER TO THE SIDE OF THE BASIN AND REMOVE ANY DEBRIS. ALSO CHECK THE ORIFICE INSIDE THE SKIMMER AND THE ARM OR BARREL PIPE FOR CLOGGING; IF CLOGGED, REMOVE THE DEBRIS.

NOTE (G.S. 113A-57 (2))

THE ANGLE FOR GRADED SLOPES AND FILLS SHALL BE NO GREATER THAN THE ANGLE THAT CAN BE RETAINED BY VEGETATIVE COVER OR OTHER ADEQUATE EROSION CONTROL DEVICES OR STRUCTURES. IN ANY EVENT, SLOPES LEFT EXPOSED WILL, WITHIN 21 CALENDAR DAYS OF COMPLETION OF ANY GRADING, BE PLANTED OR OTHERWISE PROVIDED WITH TEMPORARY OR PERMANENT GROUND COVER, DEVICES, OR STRUCTURES SUFFICIENT TO RESTRAIN EROSION.

CITY OF WILMINGTON STANDARD NOTES

1. CONTACT THE NORTH CAROLINA ONE CALL CENTER PRIOR TO DOING ANY DIGGING AT 1-800-632-4949.
2. PRIOR TO ANY CLEARING, GRADING OR CONSTRUCTION ACTIVITY, TREE PROTECTION FENCING SHALL BE INSTALLED AROUND PROTECTED TREES OR GROVES OF TREES AND NO CONSTRUCTION WORKERS, TOOLS, MATERIALS, OR VEHICLES ARE PERMITTED WITHIN THE TREE PROTECTION FENCING.
3. ALL PAVEMENT MARKINGS IN PUBLIC RIGHTS-OF-WAY AND FOR DRIVEWAYS ARE TO BE THERMOPLASTIC AND MEET CITY AND/OR NCDOT STANDARDS.
4. ONCE STREETS ARE OPEN TO TRAFFIC, THE DEVELOPER SHALL CONTACT TRAFFIC ENGINEERING TO REQUEST INSTALLATION OF TRAFFIC AND STREET NAME SIGNS. PROPOSED STREET NAMES MUST BE APPROVED PRIOR TO INSTALLATION OF STREET NAME SIGNS.
5. TRAFFIC CONTROL DEVICES (INCLUDING SIGNS AND PAVEMENT MARKINGS) IN AREAS OPEN TO PUBLIC TRAFFIC ARE TO MEET MUTCD (MANUAL ON UNIFORM TRAFFIC CONTROL DEVICES) STANDARDS.
6. ALL TRAFFIC CONTROL SIGNS AND MARKING OFF THE RIGHT-OF-WAY ARE TO BE MAINTAINED BY THE PROPERTY OWNER IN ACCORDANCE WITH MUTCD STANDARDS.
7. ANY BROKEN OR MISSING SIDEWALK PANELS AND CURBING SHALL BE REPLACED BY THE CONTRACTOR.
8. CONTACT CITY OF WILMINGTON TRAFFIC ENGINEERING AT 341-7852 TO DISCUSS STREET LIGHTING OPTIONS.
9. IF THE CONTRACTOR DESIRES WATER FOR CONSTRUCTION HE SHALL APPLY WITH THE CAPE FEAR PUBLIC UTILITY AUTHORITY IN ADVANCE FOR THIS SERVICE AND MUST PROVIDE A REDUCED PRESSURE ZONE (RPZ) BACKFLOW PREVENTION DEVICE ON THE DEVELOPER'S SIDE OF THE WATER METER BOX.
10. THE NUMBER AND SPACING OF DRIVEWAYS FOR ALL INTERCONNECTED SITES WILL BE DETERMINED BY THE COMBINED FRONTAGE OF THE INTERCONNECTED PROPERTIES.
11. CONTACT TRAFFIC ENGINEERING TO ENSURE THAT ALL TRAFFIC SIGNAL FACILITIES AND EQUIPMENT ARE SHOWN ON THE PLAN. CALL TRAFFIC ENGINEERING FORTY-EIGHT HOURS PRIOR TO ANY EXCAVATION IN THE RIGHT-OF-WAY.
12. TACTILE WARNING MATS ARE TO BE INSTALLED ON ALL WHEELCHAIR RAMPS.
13. NO LAND DISTURBANCE INCLUDING TREE REMOVAL IS TO OCCUR OUTSIDE THE LIMITS OF DISTURBANCE SHOWN ON THE PLANS.
14. IF UNITS ARE SOLD AT ANY POINT, THE BUYER MUST RECEIVE A SUBDIVISION STREET DISCLOSURE STATEMENT.

FIRE PROTECTION NOTES

1. HYDRANT MUST BE WITHIN 150' OF THE FDC.
2. THE FDC MUST BE WITHIN 40' OF FIRE APPARATUS PLACEMENT.
3. ALL HYDRANTS MUST BE WITHIN 600 FEET.
4. LANDSCAPING OR PARKING CANNOT BLOCK OR IMPEDE THE FDC OR FIRE HYDRANTS. A 3-FOOT CLEAR SPACE SHALL BE MAINTAINED AROUND THE CIRCUMFERENCE OF THE HYDRANT AND FDC.
5. HYDRANTS MUST BE LOCATED WITHIN 8' OF THE CURB PER CITY OF WILMINGTON STANDARDS. HYDRANTS WILL BE LOCATED WITHIN 6' OF THE CURB PER CFPUA STANDARDS.
6. COMBUSTIBLE MATERIALS MAY NOT BE STORED OR ERECTED ONSITE WITHOUT CITY FIRE INSPECTOR APPROVAL.
7. NEW HYDRANTS MUST BE AVAILABLE FOR USE PRIOR TO CONSTRUCTION.
8. UNDERGROUND FIRE LINE AND PRIVATE WATER MAINS MUST BE PERMITTED AND INSPECTED BY THE WILMINGTON FIRE DEPARTMENT FROM THE PUBLIC RIGHT-OF-WAY TO THE BUILDING. CONTACT THE WILMINGTON FIRE DEPARTMENT DIVISION OF FIRE AND LIFE SAFETY AT 910-343-0696 FOR ADDITIONAL INFORMATION.
9. A MINIMUM OF 5' SHALL SEPARATE UNDERGROUND FIRE LINES OR PRIVATE WATER MAINS FROM UNDERGROUND UTILITIES
10. CONTRACTOR SHALL MAINTAIN AN ALL-WEATHER ACCESS TO ALL PORTIONS OF THE JOBSITE WHERE COMBUSTIBLES ARE PRESENT AT ALL TIMES DURING CONSTRUCTION.
11. TEMPORARY STREET SIGNS SHALL BE INSTALLED AT EACH STREET INTERSECTION WHEN CONSTRUCTION OF NEW ROADWAYS ALLOWS PASSAGE BY VEHICLES.
12. FIRE DEPARTMENT ACCESS WIDTHS SHALL BE A MINIMUM OF 20-FEET UNLESS LESSER WIDTHS ARE APPROVED BY THE FIRE CODE OFFICIAL.

UTILITY COMPANY CONTACTS

DUKE/PROGRESS ENERGY: SID LIVINGSTON/MARK HATFIELD (910) 452-2777

DUKE ENERGY (TRANSMISSION): BILL WILDER (910) 772-4903

AT&T (BELLSOUTH): JAMES BATSON (910) 452-5300

TIME WARNER CABLE: ROBERT JOHN (910) 216-4494

PIEDMONT NATURAL GAS: PAUL GONKA (910) 512-2841
DJ MEDEIROS (910) 431-3233

CAPE FEAR PUBLIC UTILITY AUTHORITY (910) 332-6550

REV.NO.	DESCRIPTIONS	DATE
E	CITY OF WILMINGTON TRC / STORMWATER / CFPUA RE-SUBMITTAL	01/22/2016
D	CITY OF WILMINGTON TRC RE-SUBMITTAL	11/12/2015
C	CITY OF WILMINGTON TRC / STORMWATER / TREE REMOVAL, NEW HANOVER COUNTY EROSION CONTROL AND CFPUA SUBMITTAL	09/16/2015
B	CITY OF WILMINGTON SRB MYLARS	07/27/2015
A	CITY OF WILMINGTON TRC CONCEPT SUBMITTAL	05/06/2015

REVISIONS

SEAL

FINAL DRAWINGS - FOR REVIEW PURPOSES ONLY

SEAL

McKIM&CREED
243 North Front Street
Wilmington, North Carolina 28401
Phone: (910)343-1048, Fax: (910)251-8282
License: F-1222
www.mckimcreed.com

NASH
NORTH AMERICA SEKISUI HOUSE, LLC

RIVERLIGHTS™ by Newland COMMUNITIES

RIVERLIGHTS CONVENTIONAL NEIGHBORHOOD PHASE II

NOTES

DATE:	05/06/2015
MCE PROJ. #	02735-0141
DRAWN	TCM/EEM
DESIGNED	KCBE
CHECKED	NJL
PROJ. MGR.	RMC

SCALE
HORIZONTAL: 1"=80'
VERTICAL: N/A

M&C FILE NUMBER: G-002
DRAWING NUMBER: 2

STATUS: FINAL DESIGN
ISSUED FOR PERMITTING

REVISION: E

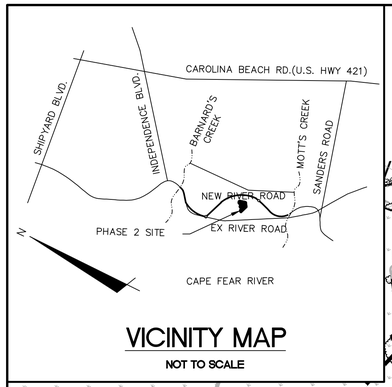

VICINITY MAP

NOT TO SCALE

SITE DATA TABLE	CONVENTIONAL – PHASE 2	
GENERAL INFORMATION		
APPLICANT NAME	NNP IV– CAPE FEAR RIVER, LLC	
SITE ADDRESS	4410 RIVER ROAD	
PROPERTY OWNER	NNP IV– CAPE FEAR RIVER, LLC	
DEVELOPER	NNP IV– CAPE FEAR RIVER LLC	
MAP SCALE	1"=100'	
PROPERTY BOUNDARY		
TAX PARCEL IDENTIFICATION NUMBER	R07000–006–009–000	
ZONING DISTRICT	R–7/CD CLUSTER	
TOTAL ACREAGE WITHIN THE RIVER ROAD BOUNDARY	1,329.41 ACRES (57,909,099.6 SF)	
TOTAL ACREAGE WITHIN THE SF–2 BOUNDARY	51.89 ACRES (1,684,343 SF)	
ADJACENT PROPERTY		
ADJACENT PROPERTY	PROPERTY	ZONING
	WATERMARK MARINA	LI
	DUKE PROGRESS ENERGY	I–2
VICINITY		
VICINITY MAP	SEE CX–101	

SITE DATA TABLE	CONVENTIONAL – PHASE 2	
TOPOGRAPHY AND DRAINAGE		
2–FT TOPOGRAPHY MINIMUM INTERVAL	SEE CX–101	
DATE OF TOPOGRAPHY DATA	5/5/2015	
100–YR FLOODPLAIN LINE	SEE CX–101	
LOCATION OF NATURAL WATER FEATURES	LOCATION	CLASSIFICATION
DITCHES	SEE CX–101	NON–JURISDICTIONAL
STREAMS	N/A	
CREEKS	N/A	
FLOOD PRONE AREAS	SEE CX–101	
AREAS OF NATURALLY CONCENTRATED SURFACE DRAINAGE	N/A	
SOIL		
SOIL TYPE(S) AND BOUNDARIES	SEE CX–101	
NORTH CAROLINA COASTAL AREA MANAGEMENT AD INFORMATION		
CAMA AREA OF ENVIRONMENTAL CONCERN	SEE CX–101	
SETBACKS	75 FT	
CAMA LAND USE CLASSIFICATION(S)	TRANSITION/CONSERVATION	
CONSERVATION RESOURCE REGULATIONS		
PRESENCE OF CONSERVATION RESOURCE	PRESENCE; SEE CX–101	
SETBACKS	TABLE; SEE CX–101	
VEGETATED BUFFER	35' BUFFER, SEE CX–101	
HISTORIC AND ARCHEOLOGICAL SITES		
LOCAL, STATE,OR FEDERALLY RECOGNIZED HISTORIC STRUCTURE(S) OR ARCHEOLOGICAL RESOURCES	NOT PRESENT	
LOCATION	N/A	
CEMETERIES		
CEMETERIES, BURIAL SITES, OR BURIAL GROUNDS?	NOT PRESENT	
FORESTED AREAS		
BOUNDARIES OF FORESTED AREAS	SEE CX–101	
FOREST AREA	39.66 ACRES (1,727,739 SF)	
HABITAT	FORESTED WETLAND/TIDAL MARSH	
DOMINANT SPECIES	OAK, PINE	
WETLANDS		
404/SECTION 10 WETLAND LOCATION	PRESENCE; SEE CX–101	
METHOD OF DETERMINATION	N/A	
IMPACTED WETLANDS	N/A	
ENDANGERED SPECIES OR HABITAT		
ENDANGERED SPECIES OR HABITAT IN PROJECT AREA	NOT PRESENT	
AUTOMOBILE, BICYCLE, PEDESTRIAN, OR TRANSIT FACILITIES		
EXISTING OR PROPOSED THOROUGHFARES, BIKE ROUTES, PEDESTRIAN SIDEWALKS OR TRAILS, AND TRANSIT FACILITIES	NOT PRESENT	

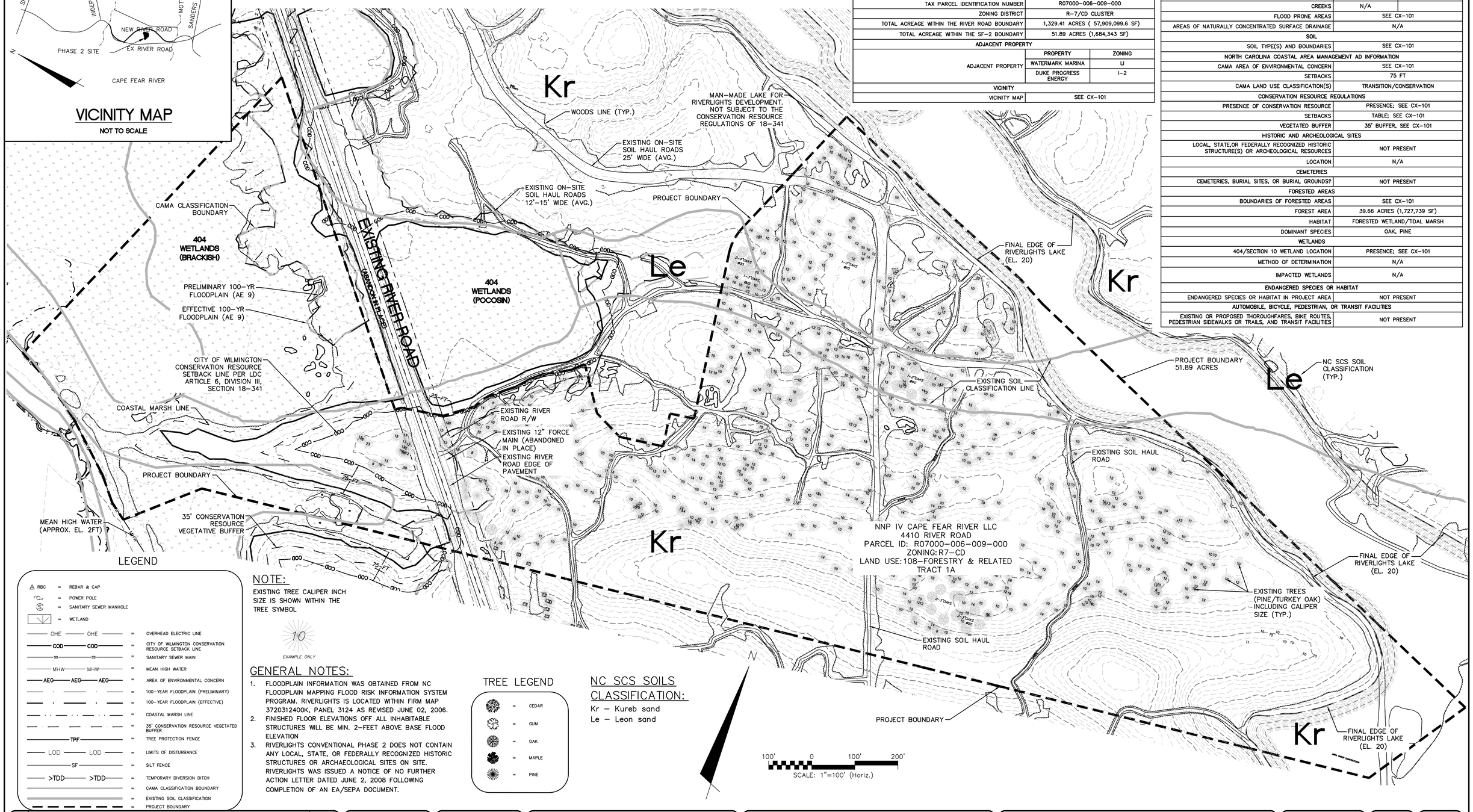

LEGEND

RBC	=	REBAR & CAP
	=	POWER POLE
S	=	SANITARY SEWER MANHOLE
	=	WETLAND
OHE	=	OVERHEAD ELECTRIC LINE
COD	=	CITY OF WILMINGTON CONSERVATION RESOURCE SETBACK LINE
SS	=	SANITARY SEWER MAIN
MHW	=	MEAN HIGH WATER
AEC	=	AREA OF ENVIRONMENTAL CONCERN
	=	100–YEAR FLOODPLAIN (PRELIMINARY)
	=	100–YEAR FLOODPLAIN (EFFECTIVE)
	=	COASTAL MARSH LINE
	=	35' CONSERVATION RESOURCE VEGETATED BUFFER
TPF	=	TREE PROTECTION FENCE
LOD	=	LIMITS OF DISTURBANCE
SF	=	SILT FENCE
>TDD	=	TEMPORARY DIVERSION DITCH
	=	CAMA CLASSIFICATION BOUNDARY
	=	EXISTING SOIL CLASSIFICATION
	=	PROJECT BOUNDARY

NOTE:

EXISTING TREE CALIPER INCH SIZE IS SHOWN WITHIN THE TREE SYMBOL

10

EXAMPLE ONLY

GENERAL NOTES:

1. FLOODPLAIN INFORMATION WAS OBTAINED FROM NC FLOODPLAIN MAPPING FLOOD RISK INFORMATION SYSTEM PROGRAM. RIVERLIGHTS IS LOCATED WITHIN FIRM MAP 3720312400K, PANEL 3124 AS REVISED JUNE 02, 2006.
2. FINISHED FLOOR ELEVATIONS OFF ALL INHABITABLE STRUCTURES WILL BE MIN. 2–FEET ABOVE BASE FLOOD ELEVATION
3. RIVERLIGHTS CONVENTIONAL PHASE 2 DOES NOT CONTAIN ANY LOCAL, STATE, OR FEDERALLY RECOGNIZED HISTORIC STRUCTURES OR ARCHAEOLOGICAL SITES ON SITE. RIVERLIGHTS WAS ISSUED A NOTICE OF NO FURTHER ACTION LETTER DATED JUNE 2, 2008 FOLLOWING COMPLETION OF AN EA/SEPA DOCUMENT.

TREE LEGEND

	=	CEDAR
	=	GUM
	=	OAK
	=	MAPLE
	=	PINE

NC SCS SOILS CLASSIFICATION:

Kr – Kureb sand

Le – Leon sand

REV.NO.	DESCRIPTIONS	DATE
E	CITY OF WILMINGTON TRC / STORMWATER / CFPUA RE–SUBMITTAL	01/22/2016
D	CITY OF WILMINGTON TRC RE–SUBMITTAL	11/12/2015
C	CITY OF WILMINGTON TRC / STORMWATER / TREE REMOVAL, NEW HANOVER COUNTY EROSION CONTROL AND CFPUA SUBMITTAL	09/16/2015
B	CITY OF WILMINGTON SRB MYLARS	07/27/2015
A	CITY OF WILMINGTON TRC CONCEPT SUBMITTAL	05/06/2015

REVISIONS

SEAL

FINAL DRAWINGS - FOR REVIEW PURPOSES ONLY

SEAL

McKIM&CREED
243 North Front Street
Wilmington, North Carolina 28401
Phone: (910)343–1048, Fax: (910)251–8282
License: F–1222
www.mckimcreed.com

NASH NORTH AMERICA SEKISUI HOUSE, LLC

RIVERLIGHTS™ by Newland COMMUNITIES

RIVERLIGHTS CONVENTIONAL NEIGHBORHOOD PHASE II

EXISTING CONDITIONS/SITE INVENTORY PLAN

DATE:	05/06/2015
MCE PROJ. #	02735–0141
DRAWN	TCM/EEM
DESIGNED	KCBE
CHECKED	NJL
PROJ. MGR.	RMC

SCALE
HORIZONTAL: 1"=100'
VERTICAL: N/A

M&C FILE NUMBER CX–101

DRAWING NUMBER 3

STATUS: FINAL DESIGN
ISSUED FOR PERMITTING

REVISION E

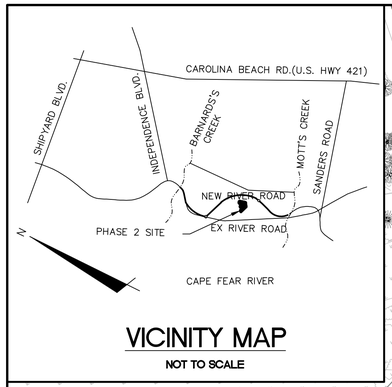

VICINITY MAP

NOT TO SCALE

100' 0 100' 200'

SCALE: 1"=100' (Horiz.)

N

TREE LEGEND

- = CEDAR
- = GUM
- = OAK
- = MAPLE
- = PINE
- = TREE TO BE REMOVED

DEMOLITION NOTES:

1. NO EARTH DISTURBING ACTIVITIES SHALL COMMENCE UNTIL ALL PERIMETER EROSION CONTROL MEASURES ARE IN PLACE IN ACCORDANCE WITH THE EROSION CONTROL SEQUENCE SHOWN IN THESE PLANS.
2. NO EARTH-DISTURBING ACTIVITY OR OTHER WORK SHALL TAKE PLACE WITHIN WETLANDS AREAS NOTED ON SURVEY. CONTRACTOR SHALL FIELD VERIFY WETLAND LIMITS FLAGGING IS IN PLACE AND SHALL NOT ENTER WETLAND AREAS. IF WETLAND FLAGGING IS MISSING OR OTHERWISE DAMAGED, IT IS THE CONTRACTOR'S RESPONSIBILITY TO NOTE WETLAND LIMITS AND PREVENT DISTURBANCE OR OTHER ACTIVITY WITHIN WETLANDS.
3. THE CONTRACTOR SHALL ASSUME RESPONSIBILITY FOR THE PROTECTION OF ALL PROPERTY CORNER MONUMENTS, AND SHALL HAVE, AT HIS EXPENSE. ALL CORNER MONUMENTS REPLACED WHICH ARE DISTURBED BY CONSTRUCTION ACTIVITIES.
4. CONTRACTOR IS RESPONSIBLE FOR REPAIRS OF DAMAGE TO ANY EXISTING IMPROVEMENTS, AT HIS EXPENSE, DURING CONSTRUCTION, SUCH AS, BUT NOT LIMITED TO, DRAINAGE, UTILITIES, PAVEMENT, STRIPING, CURB, ETC. REPAIRS SHALL BE EQUAL TO OR BETTER THAN EXISTING CONDITIONS.
5. CONTRACTOR SHALL COMPLY TO THE FULLEST EXTENT WITH ALL REGULATIONS GOVERNING THE DEMOLITION, REMOVAL, TRANSPORTATION AND DISPOSAL OF ALL DEMOLITION DEBRIS.
6. CONTRACTOR SHALL COMPLY TO THE FULLEST EXTENT WITH THE LATEST OSHA STANDARDS FOR EXCAVATION AND TRENCHING PROCEDURES. CONTRACTOR SHALL USE SUPPORT SYSTEMS, SLOPING, BENCHING, ETC. AS NECESSARY FOR THESE OPERATIONS, AND SHALL COMPLY WITH ALL OSHA PERFORMANCE CRITERIA.
7. CONTRACTOR SHALL TAKE SPECIAL CARE TO PROTECT ALL UTILITIES AND APPURTENANCES TO REMAIN.

RIVERLIGHTS LAKE

CONVENTIONAL PHASE 1

FUTURE VEHICULAR / PED BRIDGE

CONSERVATION RESOURCE SETBACK LINE

EFFECTIVE 100-YR FLOODPLAIN (AE 9)

PRELIMINARY 100-YR FLOODPLAIN (AE 9)

EXISTING RIVER ROAD (ABANDON IN PLACE)

404 WETLANDS (BRACKISH)

COASTAL MARSH LINE

CAMA AREA OF ENVIRONMENTAL CONCERN (AEC)

404 WETLANDS (POCOSIN)

PROPOSED STORMWATER BMP

OPEN SPACE

10' WALKING TRAIL

PROJECT BOUNDARY

PROPOSED STORMWATER BMP

RIVERLIGHTS LAKE

END EXISTING PAVEMENT

EXISTING WOODS LINE

MEAN HIGH WATER (APPROX. EL. 2FT)

35' CONSERVATION RESOURCE VEGETATIVE BUFFER

PROPOSED STORMWATER BMP

TREE PROTECTION FENCING (TYP.)

SAND RIDGE PRESERVATION AREA

FUTURE AMENITY

REMOVE EXISTING PAVEMENT. REMOVE EXISTING UTILITIES. CONTRACTOR TO COORDINATE WITH ALL APPLICABLE UTILITY COMPANIES.

END PHASE II

END PROPOSED PAVEMENT

PROPOSED STORMWATER BMP

EXISTING 12" FORCE MAIN (ABANDONED IN PLACE)

EXISTING RIVER ROAD EDGE OF PAVEMENT

404 WETLANDS (BRACKISH)

OPEN SPACE/COMMON SPACE

TREE PROTECTION FENCING (TYP.)

SAND RIDGE PRESERVATION AREA

OPEN SPACE/COMMON SPACE

RIVERLIGHTS LAKE

LEGEND

RBC	=	REBAR & CAP
	=	POWER POLE
	=	SANITARY SEWER MANHOLE
	=	WETLAND
OHE OHE	=	OVERHEAD ELECTRIC LINE
COD COD	=	CITY OF WILMINGTON CONSERVATION RESOURCE SETBACK LINE
SS SS	=	SANITARY SEWER MAIN
MHW MHW	=	MEAN HIGH WATER
AEC AEC AEC	=	AREA OF ENVIRONMENTAL CONCERN
	=	100-YEAR FLOODPLAIN (PRELIMINARY)
	=	100-YEAR FLOODPLAIN (EFFECTIVE)
	=	COASTAL MARSH LINE
	=	35' CONSERVATION RESOURCE VEGETATED BUFFER
TPF	=	TREE PROTECTION FENCE
LOD LOD	=	LIMITS OF DISTURBANCE
SF	=	SILT FENCE
>TDD >TDD	=	TEMPORARY DIVERSION DITCH

REVISIONS

REV.NO.	DESCRIPTIONS	DATE
E	CITY OF WILMINGTON TRC / STORMWATER / CFPUA RE-SUBMITTAL	01/22/2016
D	CITY OF WILMINGTON TRC RE-SUBMITTAL	11/12/2015
C	CITY OF WILMINGTON TRC / STORMWATER / TREE REMOVAL, NEW HANOVER COUNTY EROSION CONTROL AND CFPUA SUBMITTAL	09/16/2015
B	CITY OF WILMINGTON SRB MYLARS	07/27/2015
A	CITY OF WILMINGTON TRC CONCEPT SUBMITTAL	05/06/2015

FINAL DRAWINGS - FOR REVIEW PURPOSES ONLY

SEAL

SEAL

McKIM&CREED
243 North Front Street
Wilmington, North Carolina 28401
Phone: (910)343-1048, Fax: (910)251-8282
License: F-1222
www.mckimcreed.com

NASH NORTH AMERICA SEKISUI HOUSE, LLC

RIVERLIGHTS™ by Newland COMMUNITIES

RIVERLIGHTS CONVENTIONAL NEIGHBORHOOD PHASE II

TREE REMOVAL & PRESERVATION PLAN

DATE:	05/06/2015
MCE PROJ. #	02735-0141
DRAWN	TCM/EEM
DESIGNED	KCBE
CHECKED	NJL
PROJ. MGR.	RMC

SCALE
HORIZONTAL: 1"=100'
VERTICAL: N/A

M&C FILE NUMBER CX-102

DRAWING NUMBER 4

STATUS: FINAL DESIGN
ISSUED FOR PERMITTING

REVISION E

LEGEND

RBC	REBAR & CAP
	POWER POLE
	SANITARY SEWER MANHOLE
	WETLAND
OHE	OVERHEAD ELECTRIC LINE
COD	CITY OF WILMINGTON CONSERVATION RESOURCE SETBACK LINE
SS	SANITARY SEWER MAIN
MHW	MEAN HIGH WATER
AEC	AREA OF ENVIRONMENTAL CONCERN
	100-YEAR FLOODPLAIN (PRELIMINARY)
	100-YEAR FLOODPLAIN (EFFECTIVE)
	COASTAL MARSH LINE
	35' CONSERVATION RESOURCE VEGETATED BUFFER
TPF	TREE PROTECTION FENCE
LOD	LIMITS OF DISTURBANCE
SF	SILT FENCE
>TDD	TEMPORARY DIVERSION DITCH

TREE LEGEND

	CEDAR
	GUM
	HOLLY
	OAK
	MAPLE
	PINE

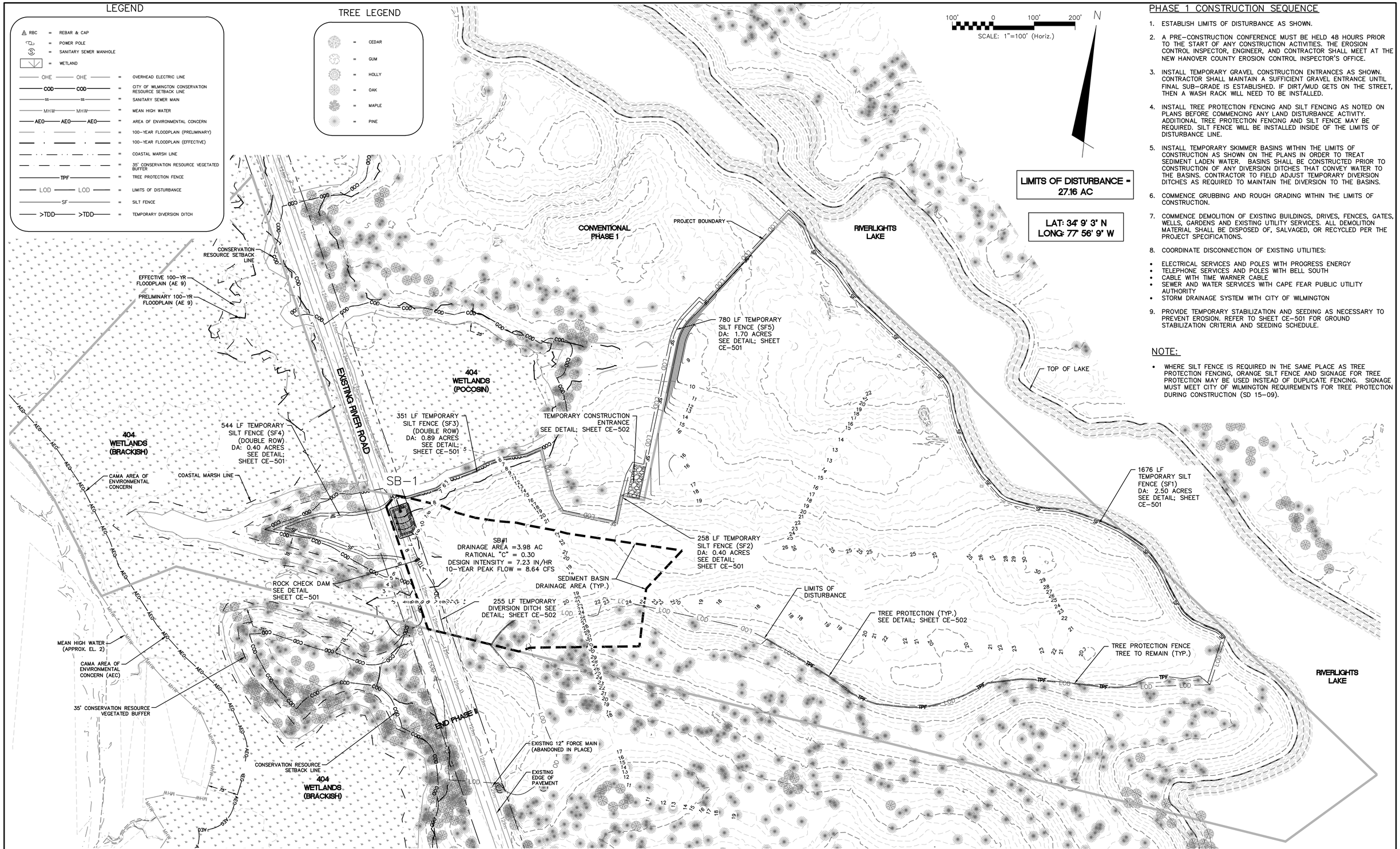

PHASE 1 CONSTRUCTION SEQUENCE

1. ESTABLISH LIMITS OF DISTURBANCE AS SHOWN.
2. A PRE-CONSTRUCTION CONFERENCE MUST BE HELD 48 HOURS PRIOR TO THE START OF ANY CONSTRUCTION ACTIVITIES. THE EROSION CONTROL INSPECTOR, ENGINEER, AND CONTRACTOR SHALL MEET AT THE NEW HANOVER COUNTY EROSION CONTROL INSPECTOR'S OFFICE.
3. INSTALL TEMPORARY GRAVEL CONSTRUCTION ENTRANCES AS SHOWN. CONTRACTOR SHALL MAINTAIN A SUFFICIENT GRAVEL ENTRANCE UNTIL FINAL SUB-GRADE IS ESTABLISHED. IF DIRT/MUD GETS ON THE STREET, THEN A WASH RACK WILL NEED TO BE INSTALLED.
4. INSTALL TREE PROTECTION FENCING AND SILT FENCING AS NOTED ON PLANS BEFORE COMMENCING ANY LAND DISTURBANCE ACTIVITY. ADDITIONAL TREE PROTECTION FENCING AND SILT FENCE MAY BE REQUIRED. SILT FENCE WILL BE INSTALLED INSIDE OF THE LIMITS OF DISTURBANCE LINE.
5. INSTALL TEMPORARY SKIMMER BASINS WITHIN THE LIMITS OF CONSTRUCTION AS SHOWN ON THE PLANS IN ORDER TO TREAT SEDIMENT LADEN WATER. BASINS SHALL BE CONSTRUCTED PRIOR TO CONSTRUCTION OF ANY DIVERSION DITCHES THAT CONVEY WATER TO THE BASINS. CONTRACTOR TO FIELD ADJUST TEMPORARY DIVERSION DITCHES AS REQUIRED TO MAINTAIN THE DIVERSION TO THE BASINS.
6. COMMENCE GRUBBING AND ROUGH GRADING WITHIN THE LIMITS OF CONSTRUCTION.
7. COMMENCE DEMOLITION OF EXISTING BUILDINGS, DRIVES, FENCES, GATES, WELLS, GARDENS AND EXISTING UTILITY SERVICES. ALL DEMOLITION MATERIAL SHALL BE DISPOSED OF, SALVAGED, OR RECYCLED PER THE PROJECT SPECIFICATIONS.
8. COORDINATE DISCONNECTION OF EXISTING UTILITIES:
   - ELECTRICAL SERVICES AND POLES WITH PROGRESS ENERGY
   - TELEPHONE SERVICES AND POLES WITH BELL SOUTH
   - CABLE WITH TIME WARNER CABLE
   - SEWER AND WATER SERVICES WITH CAPE FEAR PUBLIC UTILITY AUTHORITY
   - STORM DRAINAGE SYSTEM WITH CITY OF WILMINGTON
9. PROVIDE TEMPORARY STABILIZATION AND SEEDING AS NECESSARY TO PREVENT EROSION. REFER TO SHEET CE-501 FOR GROUND STABILIZATION CRITERIA AND SEEDING SCHEDULE.

NOTE:

- WHERE SILT FENCE IS REQUIRED IN THE SAME PLACE AS TREE PROTECTION FENCING, ORANGE SILT FENCE AND SIGNAGE FOR TREE PROTECTION MAY BE USED INSTEAD OF DUPLICATE FENCING. SIGNAGE MUST MEET CITY OF WILMINGTON REQUIREMENTS FOR TREE PROTECTION DURING CONSTRUCTION (SD 15-09).

REV.NO.	DESCRIPTIONS	DATE
E	CITY OF WILMINGTON TRC / STORMWATER / CFPUA RE-SUBMITTAL	01/22/2016
D	CITY OF WILMINGTON TRC RE-SUBMITTAL	11/12/2015
C	CITY OF WILMINGTON TRC / STORMWATER / TREE REMOVAL, NEW HANOVER COUNTY EROSION CONTROL AND CFPUA SUBMITTAL	09/16/2015
B	CITY OF WILMINGTON SRB MYLARS	07/27/2015
A	CITY OF WILMINGTON TRC CONCEPT SUBMITTAL	05/06/2015

REVISIONS

FINAL DRAWINGS - FOR REVIEW PURPOSES ONLY

SEAL

SEAL

McKIM&CREED
243 North Front Street
Wilmington, North Carolina 28401
Phone: (910)343-1048, Fax: (910)251-8282
License: F-1222
www.mckimcreed.com

NORTH AMERICA SEKISUI HOUSE, LLC

RIVERLIGHTS™ by Newland COMMUNITIES

RIVERLIGHTS CONVENTIONAL NEIGHBORHOOD PHASE II

EROSION CONTROL PLAN PHASE 1

DATE:	05/06/2015
MCE PROJ. #	02735-0141
DRAWN	TCM/EEM
DESIGNED	KCBE
CHECKED	NJL
PROJ. MGR.	RMC

SCALE
HORIZONTAL: 1"=100'
VERTICAL: N/A

M&C FILE NUMBER CE-101
DRAWING NUMBER 5

STATUS: FINAL DESIGN
ISSUED FOR PERMITTING
REVISION E

LEGEND

RBC	=	REBAR & CAP
	=	POWER POLE
	=	SANITARY SEWER MANHOLE
	=	WETLAND
OHE OHE	=	OVERHEAD ELECTRIC LINE
COD COD	=	CITY OF WILMINGTON CONSERVATION RESOURCE SETBACK LINE
SS SS	=	SANITARY SEWER MAIN
MHW MHW	=	MEAN HIGH WATER
AEC AEC AEC	=	AREA OF ENVIRONMENTAL CONCERN
	=	100-YEAR FLOODPLAIN (PRELIMINARY)
	=	100-YEAR FLOODPLAIN (EFFECTIVE)
	=	COASTAL MARSH LINE
	=	35' CONSERVATION RESOURCE VEGETATED BUFFER
TPF	=	TREE PROTECTION FENCE
LOD LOD	=	LIMITS OF DISTURBANCE
SF	=	SILT FENCE
>TDD >TDD	=	TEMPORARY DIVERSION DITCH

TREE LEGEND

	=	CEDAR
	=	GUM
	=	HOLLY
	=	OAK
	=	MAPLE
	=	PINE

100' 0 100' 200'
SCALE: 1"=100' (Horiz.)

N

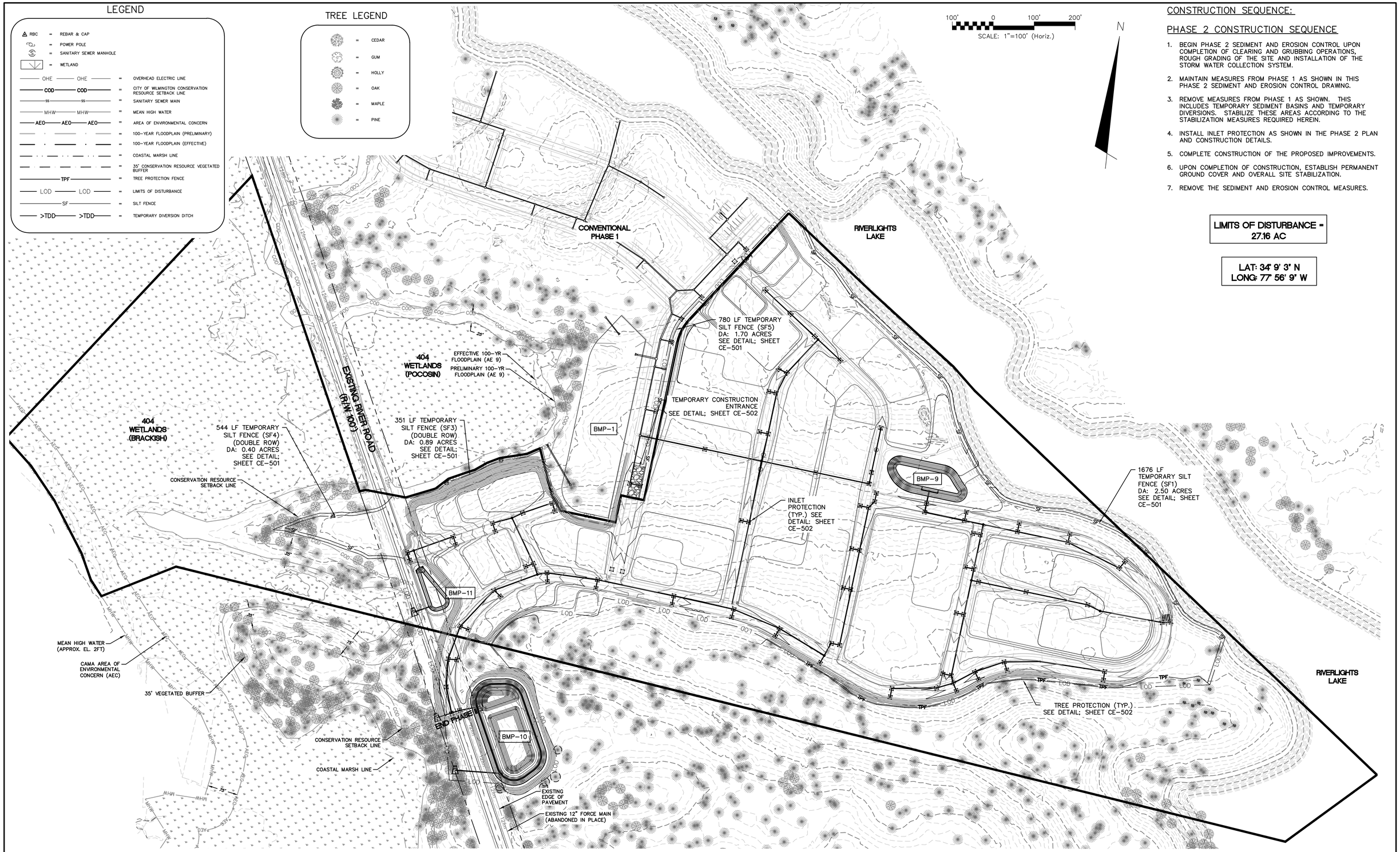

CONSTRUCTION SEQUENCE:

PHASE 2 CONSTRUCTION SEQUENCE

1. BEGIN PHASE 2 SEDIMENT AND EROSION CONTROL UPON COMPLETION OF CLEARING AND GRUBBING OPERATIONS, ROUGH GRADING OF THE SITE AND INSTALLATION OF THE STORM WATER COLLECTION SYSTEM.
2. MAINTAIN MEASURES FROM PHASE 1 AS SHOWN IN THIS PHASE 2 SEDIMENT AND EROSION CONTROL DRAWING.
3. REMOVE MEASURES FROM PHASE 1 AS SHOWN. THIS INCLUDES TEMPORARY SEDIMENT BASINS AND TEMPORARY DIVERSIONS. STABILIZE THESE AREAS ACCORDING TO THE STABILIZATION MEASURES REQUIRED HEREIN.
4. INSTALL INLET PROTECTION AS SHOWN IN THE PHASE 2 PLAN AND CONSTRUCTION DETAILS.
5. COMPLETE CONSTRUCTION OF THE PROPOSED IMPROVEMENTS.
6. UPON COMPLETION OF CONSTRUCTION, ESTABLISH PERMANENT GROUND COVER AND OVERALL SITE STABILIZATION.
7. REMOVE THE SEDIMENT AND EROSION CONTROL MEASURES.

LIMITS OF DISTURBANCE = 27.16 AC

LAT: 34° 9' 3" N
LONG: 77° 56' 9" W

REV.NO.	DESCRIPTIONS	DATE
E	CITY OF WILMINGTON TRC / STORMWATER / CFPUA RE-SUBMITTAL	01/22/2016
D	CITY OF WILMINGTON TRC RE-SUBMITTAL	11/12/2015
C	CITY OF WILMINGTON TRC / STORMWATER / TREE REMOVAL, NEW HANOVER COUNTY EROSION CONTROL AND CFPUA SUBMITTAL	09/16/2015
B	CITY OF WILMINGTON SRB MYLARS	07/27/2015
A	CITY OF WILMINGTON TRC CONCEPT SUBMITTAL	05/06/2015

REVISIONS

FINAL DRAWINGS - FOR REVIEW PURPOSES ONLY

SEAL

SEAL

McKIM&CREED
243 North Front Street
Wilmington, North Carolina 28401
Phone: (910)343-1048, Fax: (910)251-8282
License: F-1222
www.mckimcreed.com

NASH North America Sekisui House, LLC

RIVERLIGHTS™ by Newland COMMUNITIES

RIVERLIGHTS CONVENTIONAL NEIGHBORHOOD PHASE II

EROSION CONTROL PLAN PHASE 2

DATE:	05/06/2015
MCE PROJ. #	02735-0141
DRAWN	TCM/EEM
DESIGNED	KCBE
CHECKED	NJL
PROJ. MGR.	RMC

SCALE
HORIZONTAL: 1"=100'
VERTICAL: N/A

M&C FILE NUMBER: CE-102
DRAWING NUMBER: 6

STATUS: FINAL DESIGN
ISSUED FOR PERMITTING
REVISION: E

STORM DRAINAGE SCHEDULE							
FROM	TO	Inlet Invert (ft)	Outlet Invert (ft)	Size	Length	Slope	Material
MH-1-76	CB-1-78	15.50'	14.28'	15"	111.54'	1.09%	RCP Class III
JB-1-61	DI-1-60	13.13'	12.51'	15"	141.00'	0.44%	RCP Class III
DI-1-77	MH-1-76	16.92'	16.04'	15"	75.04'	1.17%	RCP Class III
DI-1-75B	MH-1-76	15.80'	15.50'	15"	20.37'	1.47%	RCP Class III
DI-1-75A	DI-1-75B	15.88'	15.80'	15"	4.01'	2.00%	RCP Class III
DI-1-74	DI-1-75A	17.10'	15.88'	15"	67.27'	1.81%	RCP Class III
DI-1-73	DI-1-74	18.20'	17.10'	15"	84.09'	1.31%	RCP Class III
DI-1-71B	DI-1-70C	16.23'	15.92'	15"	51.59'	0.61%	RCP Class III
DI-1-71A	DI-1-71B	16.25'	16.23'	15"	4.01'	0.50%	RCP Class III
DI-1-70C	DI-1-70A	15.92'	15.60'	15"	51.59'	0.61%	RCP Class III
DI-1-70B		15.65'	15.52'	15"	24.48'	0.54%	RCP Class III
DI-1-70A	DI-1-70B	15.60'	15.56'	15"	3.99'	1.00%	RCP Class III
DI-1-69B	DI-1-68A	15.50'	14.25'	15"	133.22'	0.94%	RCP Class III
DI-1-68B	JB-1-61	14.20'	13.13'	15"	131.77'	0.81%	RCP Class III
DI-1-68A	DI-1-68B	14.25'	14.20'	15"	4.01'	1.25%	RCP Class III
DI-1-60		12.51'	11.72'	18"	159.64'	0.49%	RCP Class III
CB-1-79	CB-1-78	14.50'	14.28'	15"	22.29'	0.99%	RCP Class III
CB-1-78	CB-1-67	14.28'	14.00'	15"	55.33'	0.51%	RCP Class III
CB-1-67	CB-1-65	14.00'	13.49'	15"	101.72'	0.50%	RCP Class III
CB-1-66	CB-1-67	14.11'	14.00'	15"	21.30'	0.52%	RCP Class III

STORM DRAINAGE SCHEDULE							
FROM	TO	Inlet Invert (ft)	Outlet Invert (ft)	Size	Length	Slope	Material
NS-9-2	I-9B	12.58'	12.50'	18"	8.66'	0.92%	RCP Class III
NS-9-1	I-9A	12.59'	12.50'	18"	8.24'	1.09%	RCP Class III
MH-9-39	CB-9-10	13.61'	13.46'	18"	46.71'	0.32%	RCP Class III
MH-9-19	DI-9-18	17.55'	17.35'	15"	33.60'	0.60%	RCP Class III
MH-9-15	CB-9-13	14.31'	14.22'	18"	28.50'	0.31%	RCP Class III
I-9	NS-9-1	12.69'	12.59'	18"	19.00'	0.50%	RCP Class III
I-9	NS-9-2	12.69'	12.58'	18"	21.00'	0.50%	RCP Class III
DI-9-26	CB-9-24	15.66'	15.53'	15"	19.21'	0.68%	RCP Class III
DI-9-18	DI-9-17	17.35'	16.50'	15"	153.72'	0.55%	RCP Class III
DI-9-17	DI-9-16	16.50'	15.91'	15"	118.51'	0.50%	RCP Class III
DI-9-16	MH-9-15	15.91'	15.82'	15"	18.09'	0.51%	RCP Class III
CB-9-38	CB-9-36	16.65'	16.11'	15"	109.37'	0.49%	RCP Class III
CB-9-37	CB-9-38	16.76'	16.65'	15"	21.28'	0.50%	RCP Class III
CB-9-36	DI-9-26	16.11'	15.91'	15"	41.91'	0.49%	RCP Class III
CB-9-35	CB-9-33	18.24'	17.44'	15"	159.44'	0.50%	RCP Class III
CB-9-34	CB-9-35	18.35'	18.24'	15"	21.30'	0.50%	RCP Class III
CB-9-33	CB-9-32	17.44'	16.52'	15"	87.99'	1.05%	RCP Class III
CB-9-32	CB-9-30	16.52'	16.14'	15"	75.46'	0.50%	RCP Class III
CB-9-31	CB-9-32	16.63'	16.52'	15"	21.52'	0.51%	RCP Class III
CB-9-30	DI-9-26	16.14'	15.84'	15"	60.12'	0.50%	RCP Class III

STORM DRAINAGE SCHEDULE							
FROM	TO	Inlet Invert (ft)	Outlet Invert (ft)	Size	Length	Slope	Material
OUT P10	O-10	7.50'	6.98'	15"	115.46'	0.45%	RCP Class III
MH-10-30A	CB-10-30	13.48'	12.84'	15"	127.45'	0.50%	RCP Class III
MH-10-15	CB-10-21	14.89'	12.50'	15"	123.32'	1.94%	RCP Class III
MH-10-10	CB-10-9	9.86'	9.30'	18"	112.69'	0.50%	RCP Class III
DI-10-42	CB-10-25	12.26'	11.52'	18"	149.98'	0.49%	RCP Class III
CB-10-41	CB-10-40	15.81'	15.70'	15"	21.30'	0.50%	RCP Class III
CB-10-40	CB-10-39	15.70'	15.60'	15"	20.85'	0.47%	RCP Class III
CB-10-39	CB-10-37	15.60'	15.00'	15"	106.71'	0.56%	RCP Class III
CB-10-38	CB-10-39	16.00'	15.88'	15"	21.29'	0.56%	RCP Class III
CB-10-37	CB-10-35	15.00'	14.51'	15"	97.79'	0.50%	RCP Class III
CB-10-36	CB-10-37	16.25'	16.14'	15"	21.29'	0.52%	RCP Class III
CB-10-35	CB-10-33	14.51'	13.82'	15"	138.65'	0.50%	RCP Class III
CB-10-34	CB-10-35	16.40'	16.29'	15"	21.29'	0.52%	RCP Class III
CB-10-33	CB-10-32	13.82'	13.70'	15"	21.29'	0.56%	RCP Class III
CB-10-32	MH-10-30A	13.70'	13.48'	15"	34.36'	0.64%	RCP Class III
CB-10-31	MH-10-30A	13.60'	13.48'	15"	20.65'	0.58%	RCP Class III
CB-10-30	DI-10-42	12.84'	12.26'	15"	121.60'	0.48%	RCP Class III
CB-10-29	CB-10-30	16.50'	16.39'	15"	21.30'	0.52%	RCP Class III
CB-10-26	DI-10-42	16.50'	16.39'	15"	19.94'	0.55%	RCP Class III
CB-10-25	CB-10-23	11.52'	10.57'	18"	190.13'	0.50%	RCP Class III
CB-10-24	CB-10-25	16.50'	16.39'	15"	21.30'	0.52%	RCP Class III
CB-10-23	CB-10-20	10.57'	9.97'	18"	124.80'	0.48%	RCP Class III

STORM DRAINAGE SCHEDULE							
FROM	TO	Inlet Invert (ft)	Outlet Invert (ft)	Size	Length	Slope	Material
CB-1-65	JB-1-61	13.49'	13.13'	15"	68.47'	0.53%	RCP Class III
CB-1-64	CB-1-65	13.60'	13.49'	15"	21.30'	0.52%	RCP Class III
CB-1-63	JB-1-61	14.86'	13.13'	15"	152.46'	1.13%	RCP Class III
CB-1-62	CB-1-63	15.07'	14.86'	15"	21.30'	0.99%	RCP Class III
	DI-1-69B	15.52'	15.50'	15"	4.01'	0.50%	RCP Class III

STORM DRAINAGE SCHEDULE							
FROM	TO	Inlet Invert (ft)	Outlet Invert (ft)	Size	Length	Slope	Material
MH-11-6	I-11	7.32'	7.00'	15"	50.93'	0.63%	RCP Class III
CB-11-5	MH-11-6	11.00'	8.50'	15"	102.15'	2.45%	RCP Class III
CB-11-4	CB-11-5	11.31'	11.00'	15"	21.31'	1.46%	RCP Class III
CB-11-3	MH-11-6	7.40'	7.32'	15"	16.54'	0.48%	RCP Class III
CB-11-2	CB-11-3	7.50'	7.40'	15"	19.81'	0.50%	RCP Class III
	O-11	8.00'	7.75'	15"	42.86'	0.58%	RCP Class III

STORM DRAINAGE SCHEDULE							
FROM	TO	Inlet Invert (ft)	Outlet Invert (ft)	Size	Length	Slope	Material
CB-9-29	CB-9-30	16.25'	16.14'	15"	21.32'	0.52%	RCP Class III
CB-9-27	DI-9-26	15.76'	15.66'	15"	20.65'	0.51%	RCP Class III
CB-9-25	CB-9-24	16.50'	16.35'	15"	21.29'	0.70%	RCP Class III
CB-9-24	CB-9-22	15.53'	14.74'	18"	151.89'	0.52%	RCP Class III
CB-9-23	CB-9-22	18.00'	17.90'	15"	21.29'	0.49%	RCP Class III
CB-9-22	MH-9-15	14.74'	14.31'	18"	85.66'	0.50%	RCP Class III
CB-9-21	CB-9-20	19.53'	19.42'	15"	21.30'	0.51%	RCP Class III
CB-9-20	MH-9-19	19.42'	18.65'	15"	153.98'	0.50%	RCP Class III
CB-9-14	CB-9-13	18.25'	18.00'	15"	21.29'	1.17%	RCP Class III
CB-9-13	CB-9-12	14.22'	13.74'	18"	85.00'	0.56%	RCP Class III
CB-9-12	MH-9-39	13.74'	13.61'	18"	25.85'	0.50%	RCP Class III
CB-9-11	CB-9-12	13.85'	13.74'	15"	21.29'	0.52%	RCP Class III
CB-9-10	CB-9-2	13.46'	12.96'	24"	99.46'	0.50%	RCP Class III
CB-9-9	CB-9-7	19.00'	18.00'	15"	140.38'	0.71%	RCP Class III
CB-9-8	CB-9-9	19.25'	19.00'	15"	21.30'	1.17%	RCP Class III
CB-9-7	CB-9-5	18.00'	17.25'	15"	126.13'	0.59%	RCP Class III
CB-9-6	CB-9-7	18.25'	18.00'	15"	21.30'	1.17%	RCP Class III
CB-9-5	MH-9-39	17.25'	16.44'	15"	85.57'	0.94%	RCP Class III
CB-9-4	CB-9-5	17.50'	17.25'	15"	21.30'	1.17%	RCP Class III
CB-9-1	I-9	12.85'	12.69'	24"	31.18'	0.50%	RCP Class III

STORM DRAINAGE SCHEDULE							
FROM	TO	Inlet Invert (ft)	Outlet Invert (ft)	Size	Length	Slope	Material
CB-10-22	CB-10-23	16.50'	16.39'	15"	21.30'	0.52%	RCP Class III
CB-10-21	MH-10-10	12.50'	12.24'	15"	28.05'	0.93%	RCP Class III
CB-10-20	MH-10-10	9.97'	9.86'	18"	23.80'	0.46%	RCP Class III
CB-10-19	CB-10-20	10.84'	10.73'	15"	21.29'	0.52%	RCP Class III
CB-10-18	CB-10-16	15.75'	15.39'	15"	76.06'	0.48%	RCP Class III
CB-10-17	CB-10-18	15.86'	15.75'	15"	21.30'	0.52%	RCP Class III
CB-10-16	MH-10-15	15.39'	14.89'	15"	28.84'	1.73%	RCP Class III
CB-10-14	MH-10-15	15.13'	14.89'	15"	49.32'	0.50%	RCP Class III
CB-10-13	CB-10-14	15.24'	15.13'	15"	21.31'	0.50%	RCP Class III
CB-10-11	CB-10-21	14.25'	14.00'	15"	21.39'	1.17%	RCP Class III
CB-10-9	CB-10-7	9.30'	8.80'	18"	121.11'	0.41%	RCP Class III
CB-10-8	CB-10-9	12.75'	12.64'	15"	21.95'	0.50%	RCP Class III
CB-10-7	CB-10-5	8.80'	8.40'	18"	85.03'	0.47%	RCP Class III
CB-10-6	CB-10-7	11.50'	11.39'	15"	21.61'	0.51%	RCP Class III
CB-10-5	CB-10-3	8.40'	8.09'	18"	67.86'	0.46%	RCP Class III
CB-10-4	CB-10-5	11.50'	11.39'	15"	21.49'	0.50%	RCP Class III
CB-10-3	CB-10-2	8.09'	7.78'	18"	65.18'	0.48%	RCP Class III
CB-10-2	O-10A	11.50'	8.00'	24"	37.31'	9.38%	RCP Class III
CB-10-2	CB-10-1	7.78'	7.67'	18"	21.30'	0.50%	RCP Class III
CB-10-1	I-10	7.67'	7.50'	24"	50.36'	0.35%	RCP Class III

NOTE:
SEE SHEET CG-503 FOR STORM DRAINAGE STRUCTURE SCHEDULE

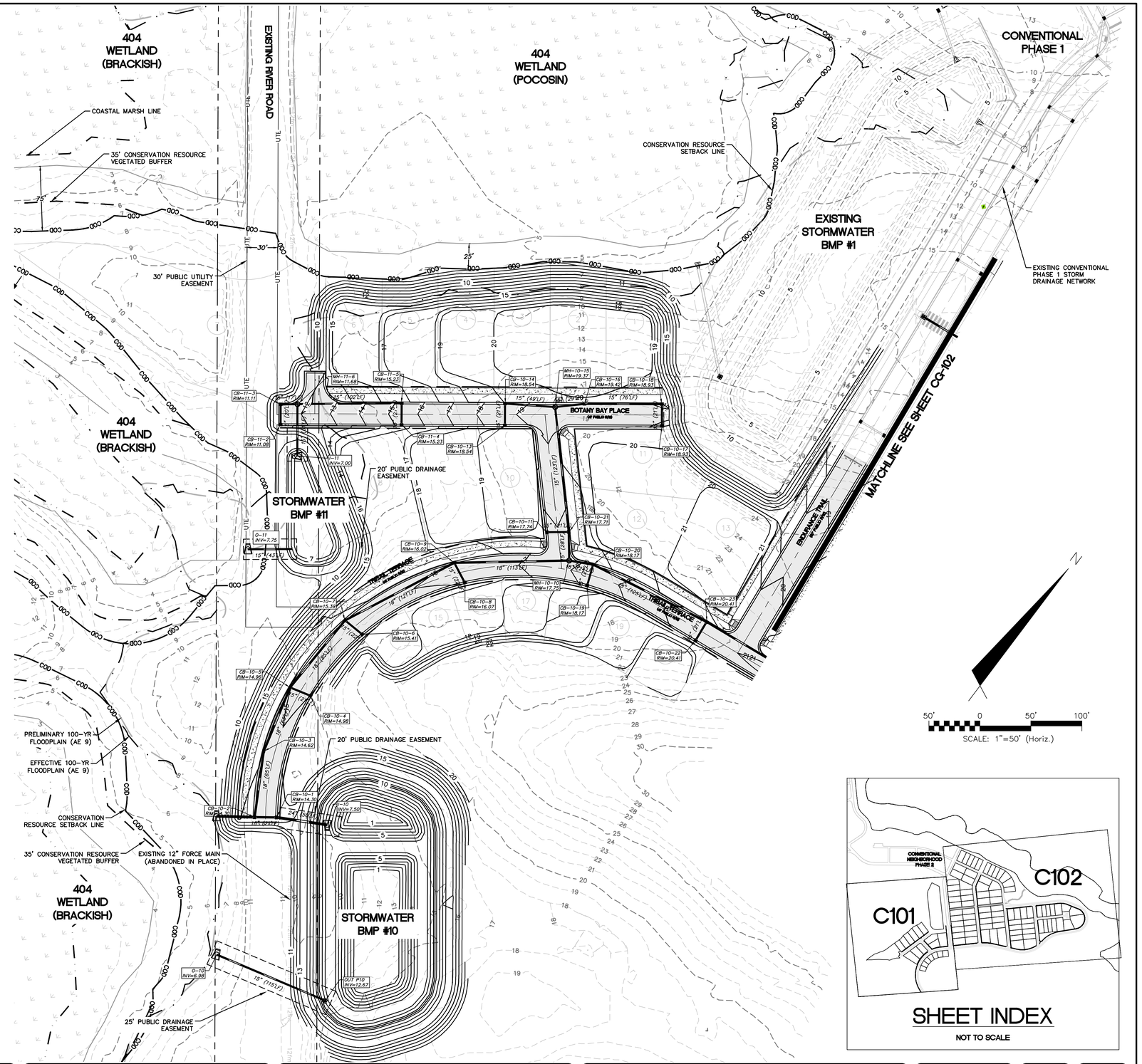

SHEET INDEX

NOT TO SCALE

REV.NO.	DESCRIPTIONS	DATE
E	CITY OF WILMINGTON TRC / STORMWATER / CFPUA RE-SUBMITTAL	01/22/2016
D	CITY OF WILMINGTON TRC RE-SUBMITTAL	11/12/2015
C	CITY OF WILMINGTON TRC / STORMWATER / TREE REMOVAL, NEW HANOVER COUNTY EROSION CONTROL AND CFPUA SUBMITTAL	09/16/2015
B	CITY OF WILMINGTON SRB MYLARS	07/27/2015
A	CITY OF WILMINGTON TRC CONCEPT SUBMITTAL	05/06/2015

REVISIONS

FINAL DRAWINGS - FOR REVIEW PURPOSES ONLY

SEAL

SEAL

McKIM&CREED
243 North Front Street
Wilmington, North Carolina 28401
Phone: (910)343-1048, Fax: (910)251-8282
License: F-1222
www.mckimcreed.com

NASH — North America Sekisui House, LLC

RIVERLIGHTS™ by Newland COMMUNITIES

RIVERLIGHTS CONVENTIONAL NEIGHBORHOOD PHASE II

STORM DRAINAGE AND GRADING PLAN

DATE:	05/06/2015
MCE PROJ. #	02735-0141
DRAWN	TCM/EEM
DESIGNED	KCBE
CHECKED	NJL
PROJ. MGR.	RMC

SCALE: HORIZONTAL: 1"=50' VERTICAL: N/A

MAC FILE NUMBER: CG-101

DRAWING NUMBER: 7

STATUS: FINAL DESIGN — ISSUED FOR PERMITTING

REVISION: E

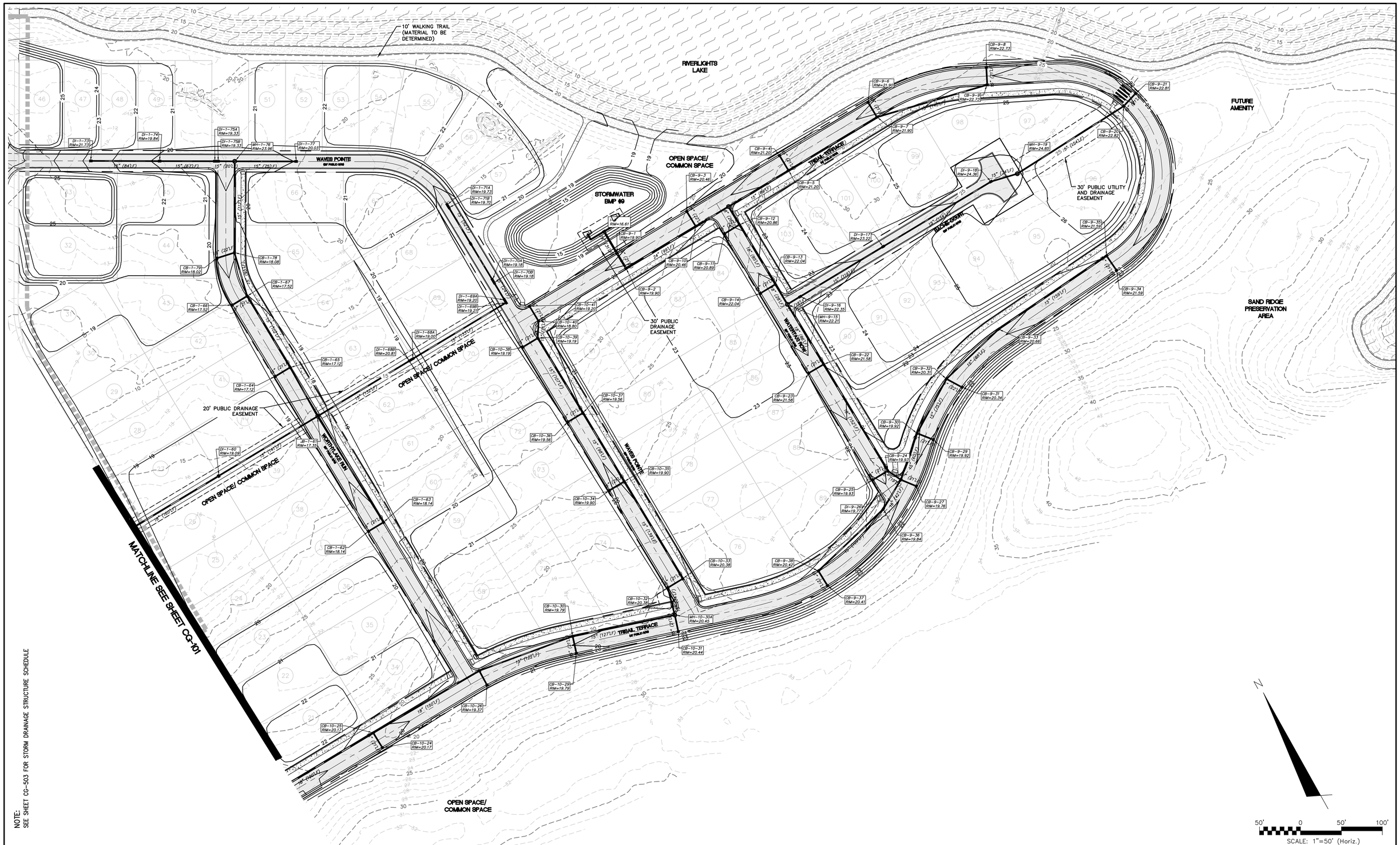

NOTE:
SEE SHEET CG-503 FOR STORM DRAINAGE STRUCTURE SCHEDULE

REV.NO.	DESCRIPTIONS	DATE
E	CITY OF WILMINGTON TRC / STORMWATER / CFPUA RE-SUBMITTAL	01/22/2016
D	CITY OF WILMINGTON TRC RE-SUBMITTAL	11/12/2015
C	CITY OF WILMINGTON TRC / STORMWATER / TREE REMOVAL, NEW HANOVER COUNTY EROSION CONTROL AND CFPUA SUBMITTAL	09/16/2015
B	CITY OF WILMINGTON SRB MYLARS	07/27/2015
A	CITY OF WILMINGTON TRC CONCEPT SUBMITTAL	05/06/2015

REVISIONS

SEAL

FINAL DRAWINGS - FOR REVIEW PURPOSES ONLY

SEAL

McKIM&CREED
243 North Front Street
Wilmington, North Carolina 28401
Phone: (910)343-1048, Fax: (910)251-8282
License: F-1222
www.mckimcreed.com

NASH
NORTH AMERICA SEKISUI HOUSE, LLC

RIVERLIGHTS™ by Newland COMMUNITIES

RIVERLIGHTS CONVENTIONAL NEIGHBORHOOD PHASE II

STORM DRAINAGE AND GRADING PLAN

DATE:	05/06/2015
MCE PROJ. #	02735-0141
DRAWN	TCM/EEM
DESIGNED	KCBE
CHECKED	NJL
PROJ. MGR.	RMC

SCALE
HORIZONTAL: 1"=50'
VERTICAL: N/A

M&C FILE NUMBER CG-102
DRAWING NUMBER 8

STATUS: FINAL DESIGN
ISSUED FOR PERMITTING
REVISION E

SITE DATA TABLE	PHASE 2
PARCEL ADDRESS	4410 RIVER ROAD
TAX PARCEL IDENTIFICATION NUMBER	R07000-006-009-000
ZONING DISTRICT	R-7/CD CLUSTER
CAMA LAND USE CLASSIFICATION	TRANSITION AND CONSERVATION
WATER BODY CLASSIFICATION	SC
TOTAL ACREAGE WITHIN RIVER LIGHTS BOUNDARY	1,329.41 ACRES (57,909,099.6 SF)
TOTAL ACREAGE PHASE 2 BOUNDARY	51.89 ACRES (2,260,510.3 SF)
PROPOSED NUMBER OF LOTS	103 SINGLE FAMILY
TOTAL AMOUNT OF DISTURBED AREA	27.16 ACRES (1,168,284 SF)
IMPERVIOUS AREA (EXISITNG)	
LOT COVERAGE	0
DRIVEWAYS	0
SIDEWALKS	0
CONCRETE OR ASPHALT STREETS	0.38 ACRES (16,610 SF)
TOTAL S.F	0.38 ACRES (16,610 SF)
PERCENT S.F	0.77%
IMPERVIOUS AREA (PROPOSED)	
LOT COVERAGE	8.61 ACRES (374,920 SF)
SIDEWALKS	0.63 ACRES (27,318 SF)
CONCRETE OR ASPHALT STREETS	3.03 ACRES (132,161 SF)
TOTAL S.F	12.26 ACRES (534,399 SF)
PERCENT S.F	24%

*PROPOSED R7-CD CLUSTER FOR ENTIRE RIVER LIGHTS DEVELOPMENT = 1,155.6 ACRES
(@ 40% OPEN SPACE) = 462.24 ACRES REQUIRED FOR ENTIRE RIVER LIGHTS DEVELOPMENT

GENERAL NOTES:

1. A LANDSCAPING PLAN INDICATING THE LOCATION OF REQUIRED STREET TREES SHALL BE SUBMITTED TO THE CITY OF WILMINGTON TRAFFIC ENGINEERING DIVISION AND PARKS AND RECREATION DEPARTMENT FOR REVIEW AND APPROVAL PRIOR TO THE RECORDING OF THE FINAL PLAT.
2. 10 FT SEPARATION REQUIRED BETWEEN BUILDINGS.
3. ZERO LOT LINES ARE PERMITTED IN CLUSTER SUBDIVISIONS.
4. ZONING AND LAND USE OF ADJACENT PROPERTIES IS AS FOLLOWS:
   NORTH- FUTURE R7-CD CLUSTER/TRANSITION
   SOUTH- FUTURE R7-CD CLUSTER/TRANSITION
   EAST- FUTURE R7-CD CLUSTER/TRANSITION
   WEST- FUTURE R7-CD CLUSTER/TRANSITION

Parcel Table			Parcel Table			Parcel Table			Parcel Table		
Parcel #	Area (SF)	Area (AC)	Parcel #	Area (SF)	Area (AC)	Parcel #	Area (SF)	Area (AC)	Parcel #	Area (SF)	Area (AC)
1	6287	0.14	29	6600	0.15	55	7241	0.17	81	6747	0.15
2	6691	0.15	30	6600	0.15	56	7359	0.17	82	6746	0.15
3	6579	0.15	31	6464	0.15	57	5400	0.12	83	6746	0.15
4	6376	0.15	32	7800	0.18	58	10379	0.24	84	6749	0.15
5	5962	0.14	33	7800	0.18	59	6600	0.15	85	6137	0.14
8	9496	0.22	34	7799	0.18	60	6600	0.15	86	6137	0.14
9	7525	0.17	35	6600	0.15	61	6600	0.15	87	6137	0.14
10	5872	0.13	36	6600	0.15	62	6697	0.15	88	6137	0.14
11	7825	0.18	37	6600	0.15	63	7802	0.18	89	10617	0.24
12	6397	0.15	38	6600	0.15	64	7791	0.18	90	6483	0.15
13	10500	0.24	39	6600	0.15	65	9466	0.22	91	5187	0.12
14	2619	0.06	40	6600	0.15	66	7735	0.18	92	5188	0.12
15	2619	0.06	41	6600	0.15	67	8185	0.19	93	5836	0.13
16	2619	0.06	42	6600	0.15	68	7809	0.18	94	8757	0.20
17	2619	0.06	43	8552	0.20	69	7798	0.18	95	8412	0.19
18	2907	0.07	44	7837	0.18	70	6702	0.15	96	14020	0.32
19	3019	0.07	45	7800	0.18	71	6627	0.15	97	7896	0.18
20	3324	0.08	46	6050	0.14	72	6627	0.15	98	5648	0.13
21	7799	0.18	47	4950	0.11	73	6627	0.15	99	7473	0.17
22	6600	0.15	48	4950	0.11	74	14279	0.33	100	4949	0.11
23	6600	0.15	49	4950	0.11	75	10942	0.25	101	4399	0.10
24	6600	0.15	50	4950	0.11	76	10234	0.23	102	4399	0.10
25	6600	0.15	51	4950	0.11	77	6138	0.14	103	5498	0.13
26	6600	0.15	52	4950	0.11	78	6138	0.14			
27	6600	0.15	53	4950	0.11	79	6138	0.14			
28	6600	0.15	54	5150	0.12	80	6138	0.14			

* SEE SHEETS CS-101 AND CS-102 FOR INDIVIDUAL LOT DIMENSIONS

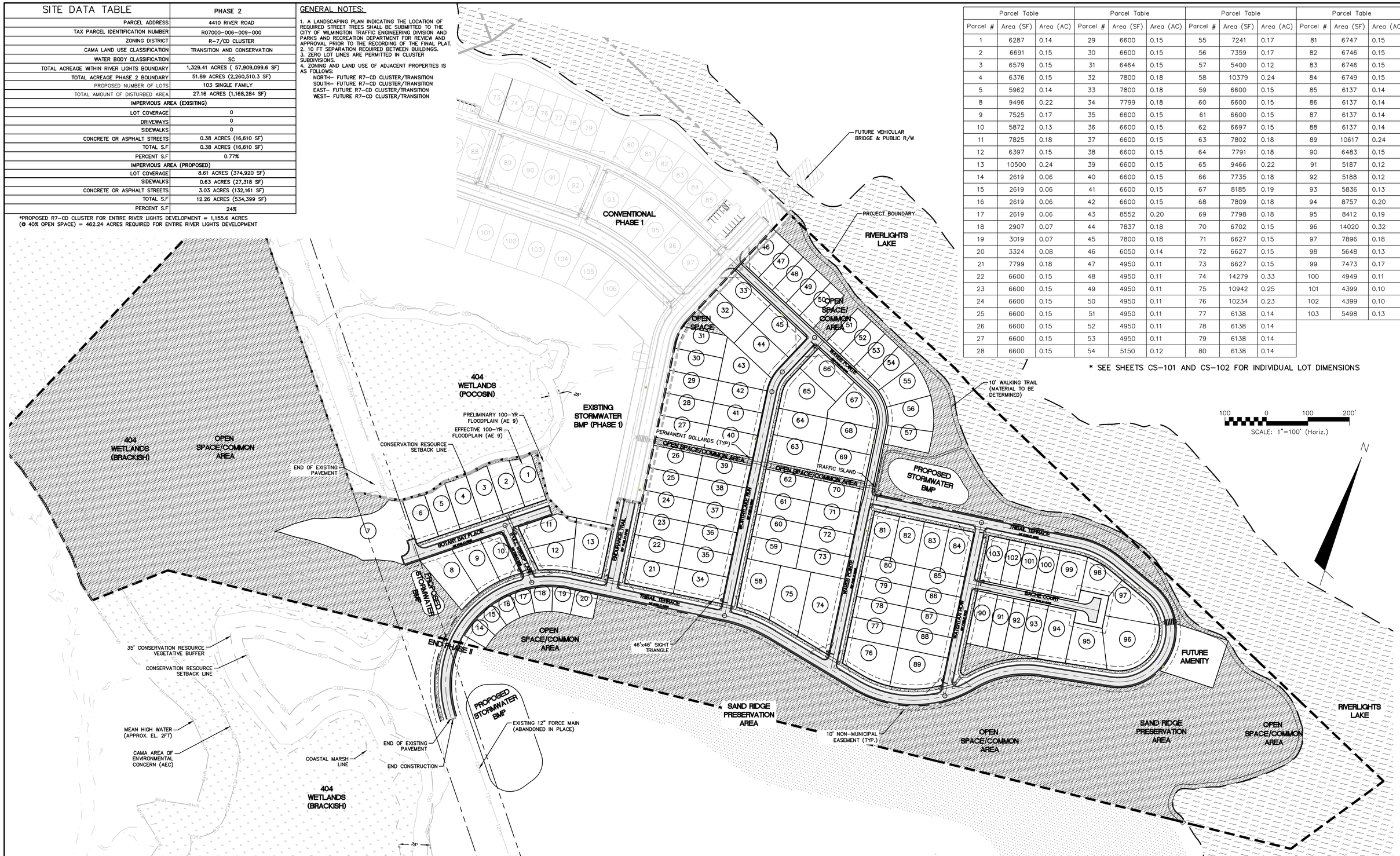

REV.NO.	DESCRIPTIONS	DATE
E	CITY OF WILMINGTON TRC / STORMWATER / CFPUA RE-SUBMITTAL	01/22/2016
D	CITY OF WILMINGTON TRC RE-SUBMITTAL	11/12/2015
C	CITY OF WILMINGTON TRC / STORMWATER / TREE REMOVAL, NEW HANOVER COUNTY EROSION CONTROL AND CFPUA SUBMITTAL	09/16/2015
B	CITY OF WILMINGTON SRB MYLARS	07/27/2015
A	CITY OF WILMINGTON TRC CONCEPT SUBMITTAL	05/06/2015

REVISIONS

FINAL DRAWINGS - FOR REVIEW PURPOSES ONLY

SEAL

SEAL

McKIM&CREED
243 North Front Street
Wilmington, North Carolina 28401
Phone: (910)343-1048, Fax: (910)251-8282
License: F-1222
www.mckimcreed.com

NASH — NORTH AMERICA SEKISUI HOUSE, LLC

RIVERLIGHTS™ by Newland COMMUNITIES

RIVERLIGHTS CONVENTIONAL NEIGHBORHOOD PHASE II

OVERALL SITE PLAN

DATE:	05/06/2015
MCE PROJ. #	02735-0141
DRAWN	TCM/EEM
DESIGNED	KCBE
CHECKED	NJL
PROJ. MGR.	RMC

SCALE: HORIZONTAL: 1"=100' VERTICAL: N/A

MAC FILE NUMBER: CS-100
DRAWING NUMBER: 9

STATUS: FINAL DESIGN
ISSUED FOR PERMITTING
REVISION: E

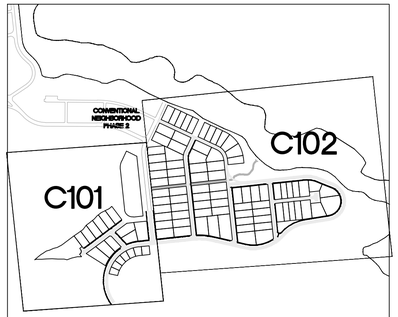

SHEET INDEX

NOT TO SCALE

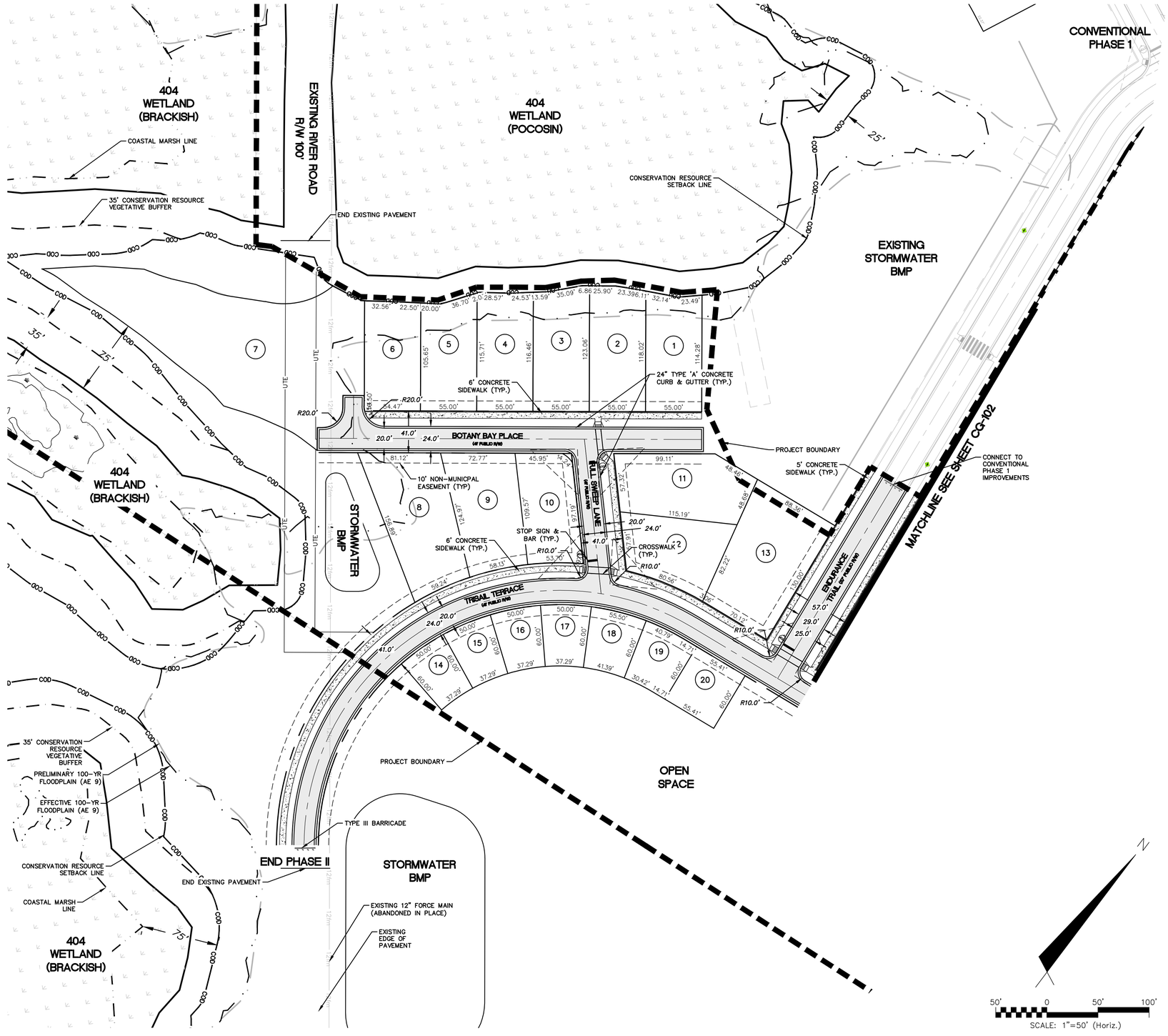

REV.NO.	DESCRIPTIONS	DATE
E	CITY OF WILMINGTON TRC / STORMWATER / CFPUA RE-SUBMITTAL	01/22/2016
D	CITY OF WILMINGTON TRC RE-SUBMITTAL	11/12/2015
C	CITY OF WILMINGTON TRC / STORMWATER / TREE REMOVAL, NEW HANOVER COUNTY EROSION CONTROL AND CFPUA SUBMITTAL	09/16/2015
B	CITY OF WILMINGTON SRB MYLARS	07/27/2015
A	CITY OF WILMINGTON TRC CONCEPT SUBMITTAL	05/06/2015

REVISIONS

FINAL DRAWINGS - FOR REVIEW PURPOSES ONLY

SEAL

SEAL

McKIM&CREED
243 North Front Street
Wilmington, North Carolina 28401
Phone: (910)343-1048, Fax: (910)251-8282
License: F-1222
www.mckimcreed.com

NASH — NORTH AMERICA SEKISUI HOUSE, LLC

RIVERLIGHTS™ by Newland COMMUNITIES

RIVERLIGHTS CONVENTIONAL NEIGHBORHOOD PHASE II

SITE PLAN

DATE:	05/06/2015
MCE PROJ. #	02735-0141
DRAWN	TCM/EEM
DESIGNED	KCBE
CHECKED	NJL
PROJ. MGR.	RMC

SCALE
HORIZONTAL: 1"=50'
VERTICAL: N/A

M&C FILE NUMBER CS-101
DRAWING NUMBER 10

STATUS: FINAL DESIGN
ISSUED FOR PERMITTING
REVISION E

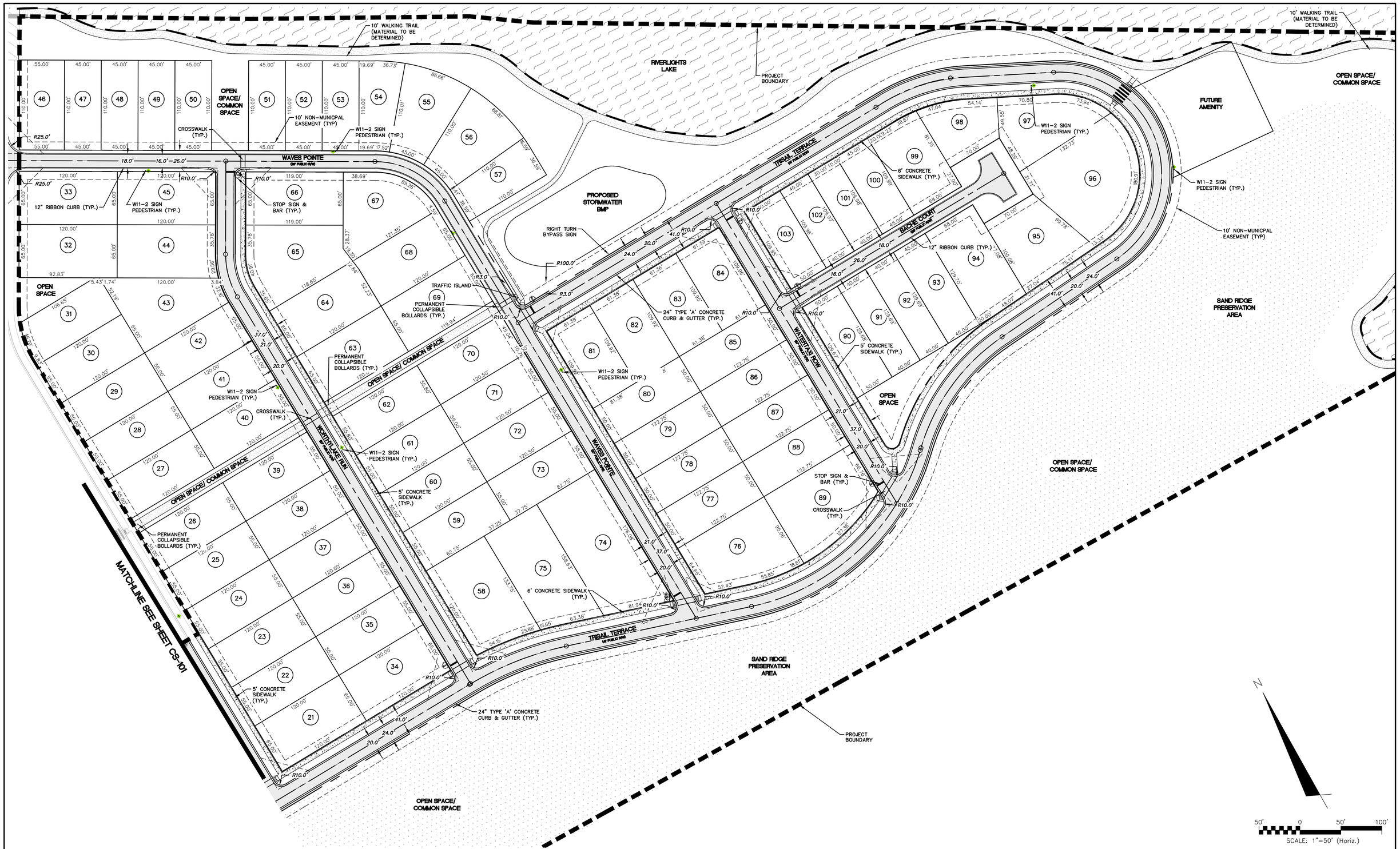

SCALE: 1"=50' (Horiz.)

REV.NO.	DESCRIPTIONS	DATE
E	CITY OF WILMINGTON TRC / STORMWATER / CFPUA RE-SUBMITTAL	01/22/2016
D	CITY OF WILMINGTON TRC RE-SUBMITTAL	11/12/2015
C	CITY OF WILMINGTON TRC / STORMWATER / TREE REMOVAL, NEW HANOVER COUNTY EROSION CONTROL AND CFPUA SUBMITTAL	09/18/2015
B	CITY OF WILMINGTON SRB MYLARS	07/27/2015
A	CITY OF WILMINGTON TRC CONCEPT SUBMITTAL	05/06/2015

REVISIONS

FINAL DRAWINGS - FOR REVIEW PURPOSES ONLY

SEAL

SEAL

McKIM&CREED
243 North Front Street
Wilmington, North Carolina 28401
Phone: (910)343-1048, Fax: (910)251-8282
License: F-1222
www.mckimcreed.com

NASH NORTH AMERICA SEKISUI HOUSE, LLC

RIVERLIGHTS™ by Newland COMMUNITIES

RIVERLIGHTS CONVENTIONAL NEIGHBORHOOD PHASE II

SITE PLAN

DATE:	05/06/2015
MCE PROJ. #	02735-0141
DRAWN	TCM/EEM
DESIGNED	KCBE
CHECKED	NJL
PROJ. MGR.	RMC

SCALE
HORIZONTAL: 1"=50'
VERTICAL: N/A

M&C FILE NUMBER CS-102
DRAWING NUMBER 11

STATUS: FINAL DESIGN
ISSUED FOR PERMITTING
REVISION E

Sanitary Sewer Pipe Data Table							
FROM	TO	Length	Size	PIPE TYPE	Slope	DOWNSTREAM INVERT	UPSTREAM INVERT
M3	A10 (LINED DROP MH)	131.59'	8"	C-900 PVC	2.72%	6.74'	3.16'
M2	M3	63.14'	8"	C-900 PVC	0.40%	6.99'	6.74'
M1 (DROP MH)	M2	232.37'	8"	C-900 PVC	0.40%	7.92'	6.99'
L1		20.00'	8"	C-900 PVC	0.40%	2.16'	2.08'
L1	C9 (DROP MH)	150.70'	8"	C-900 PVC	0.40%	2.08'	1.48'
K1	C1	66.39'	8"	C-900 PVC	0.40%	8.28'	8.02'
J4		47.00'	8"	C-900 PVC	0.40%	14.44'	14.25'
J4	J3	243.64'	8"	C-900 PVC	0.40%	14.25'	13.28'
J3	J2	143.33'	8"	C-900 PVC	0.40%	13.28'	12.71'
J2	J1	143.33'	8"	C-900 PVC	0.40%	12.71'	12.14'
J1	C1	405.97'	8"	C-900 PVC	0.40%	12.14'	10.52'
I4	Future Connection 2	23.46'	8"	C-900 PVC	0.40%	8.24'	8.15'
I3	I4	399.58'	8"	C-900 PVC	0.40%	9.84'	8.24'
I2	I3	58.88'	8"	C-900 PVC	0.40%	10.07'	9.84'
I1	I2	184.52'	8"	C-900 PVC	4.83%	18.99'	10.07'
H5	H4 (DROP MH)	25.45'	8"	C-900 PVC	0.40%	16.51'	16.41'
H4 (DROP MH)	E4	164.84'	8"	C-900 PVC	2.87%	13.23'	8.50'
H3	H4 (DROP MH)	222.91'	8"	C-900 PVC	0.40%	14.12'	13.23'
H2	H3	139.59'	8"	C-900 PVC	0.40%	14.68'	14.12'
H1	H2	141.81'	8"	C-900 PVC	0.40%	15.25'	14.68'
G1	E7	169.13'	8"	C-900 PVC	1.78%	14.83'	11.82'
Future Connection	K1	56.24'	8"	C-900 PVC	0.40%	8.50'	8.28'
F1	E7	255.02'	8"	C-900 PVC	0.40%	10.33'	9.32'
E8	A11 (LINED DROP MH)	157.85'	8"	C-900 PVC	1.18%	8.92'	7.05'
E7	E8	100.76'	8"	C-900 PVC	0.40%	9.32'	8.92'
E5	E4	110.20'	8"	C-900 PVC	0.41%	11.45'	11.00'
E4	M1 (DROP MH)	148.16'	8"	C-900 PVC	0.39%	8.50'	7.92'
E3	E4	269.71'	8"	C-900 PVC	0.40%	11.54'	10.46'
E2	E3	118.15'	8"	C-900 PVC	0.40%	12.01'	11.54'
E1	E2	103.61'	8"	C-900 PVC	0.40%	12.42'	12.01'
D4	C6	325.60'	8"	C-900 PVC	0.40%	10.68'	9.37'
D3	D4	165.45'	8"	C-900 PVC	0.40%	11.34'	10.68'
D2	D3	55.61'	8"	C-900 PVC	0.40%	11.56'	11.34'
D1	D2	382.68'	8"	C-900 PVC	0.40%	13.09'	11.56'
C10		61.73'	16"	C-900 PVC	5.70%	−8.78'	−12.30'
C9 (DROP MH)	C10	381.51'	10"	C-900 PVC	0.28%	−7.71'	−8.78'
C8	C9 (DROP MH)	110.38'	8"	C-900 PVC	0.40%	7.66'	7.22'
C7	C8	74.90'	8"	C-900 PVC	0.40%	7.96'	7.66'
C6	C7	114.24'	8"	C-900 PVC	0.40%	8.42'	7.96'
C5	C6	264.13'	8"	C-900 PVC	0.40%	9.47'	8.42'
C4	C5	249.39'	8"	C-900 PVC	0.40%	10.47'	9.47'
C3 (DROP MH)	B1	77.93'	8"	C-900 PVC	0.40%	6.82'	6.50'
C2	C3 (DROP MH)	148.65'	8"	C-900 PVC	0.40%	7.41'	6.82'
C1	C2	153.14'	8"	C-900 PVC	0.40%	8.02'	7.41'
B7	C9 (DROP MH)	214.33'	10"	C-900 PVC	0.28%	−7.11'	−7.71'
B6 (DROP MH)	B7	300.76'	10"	C-900 PVC	0.28%	−6.27'	−7.11'
B5	B6 (DROP MH)	59.39'	8"	C-900 PVC	0.40%	4.61'	4.38'
B4	B5	61.47'	8"	C-900 PVC	0.40%	4.86'	4.61'
B3	B4	236.40'	8"	C-900 PVC	0.40%	5.81'	4.86'
B2	B3	87.97'	8"	C-900 PVC	0.40%	6.16'	5.81'
B1	B2	85.42'	8"	C-900 PVC	0.40%	6.50'	6.16'
A11 (LINED DROP MH)	C10	122.25'	10"	C-900 PVC	0.29%	−8.43'	−8.78'
A10 (LINED DROP MH)	A11 (LINED DROP MH)	384.66'	10"	C-900 PVC	0.28%	−7.37'	−8.43'
A1	C3 (DROP MH)	149.68'	8"	C-900 PVC	0.40%	11.47'	10.87'

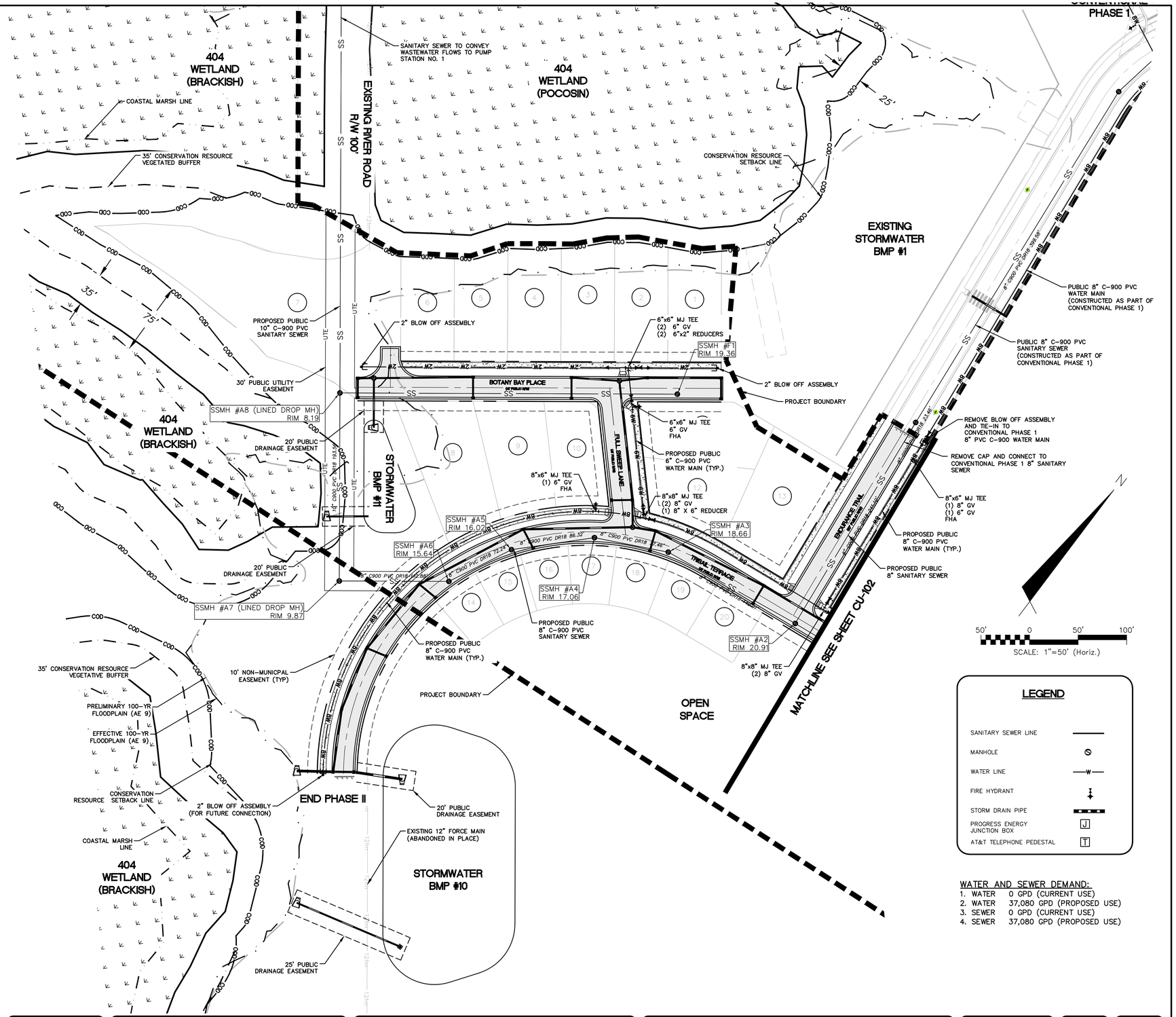

LEGEND

SANITARY SEWER LINE	
MANHOLE	S
WATER LINE	W
FIRE HYDRANT	
STORM DRAIN PIPE	
PROGRESS ENERGY JUNCTION BOX	J
AT&T TELEPHONE PEDESTAL	T

WATER AND SEWER DEMAND:

1. WATER 0 GPD (CURRENT USE)
2. WATER 37,080 GPD (PROPOSED USE)
3. SEWER 0 GPD (CURRENT USE)
4. SEWER 37,080 GPD (PROPOSED USE)

REV.NO.	DESCRIPTIONS	DATE
E	CITY OF WILMINGTON TRC / STORMWATER / CFPUA RE-SUBMITTAL	01/22/2016
D	CITY OF WILMINGTON TRC RE-SUBMITTAL	11/12/2015
C	CITY OF WILMINGTON TRC / STORMWATER / TREE REMOVAL, NEW HANOVER COUNTY EROSION CONTROL AND CFPUA SUBMITTAL	09/16/2015
B	CITY OF WILMINGTON SRB MYLARS	07/27/2015
A	CITY OF WILMINGTON TRC CONCEPT SUBMITTAL	05/06/2015

REVISIONS

FINAL DRAWINGS - FOR REVIEW PURPOSES ONLY

SEAL

SEAL

McKIM&CREED
243 North Front Street
Wilmington, North Carolina 28401
Phone: (910)343-1048, Fax: (910)251-8282
License: F-1222
www.mckimcreed.com

NASH — North America Sekisui House, LLC

RIVERLIGHTS™ by Newland COMMUNITIES

RIVERLIGHTS CONVENTIONAL NEIGHBORHOOD PHASE II

UTILITY PLAN

DATE:	05/06/2015
MCE PROJ. #	02735-0141
DRAWN	TCM/EEM
DESIGNED	KCBE
CHECKED	NJL
PROJ. MGR.	RMC

SCALE: HORIZONTAL: 1"=50' VERTICAL: N/A

M&C FILE NUMBER: CU-101

DRAWING NUMBER: 12

STATUS: FINAL DESIGN — ISSUED FOR PERMITTING

REVISION: E

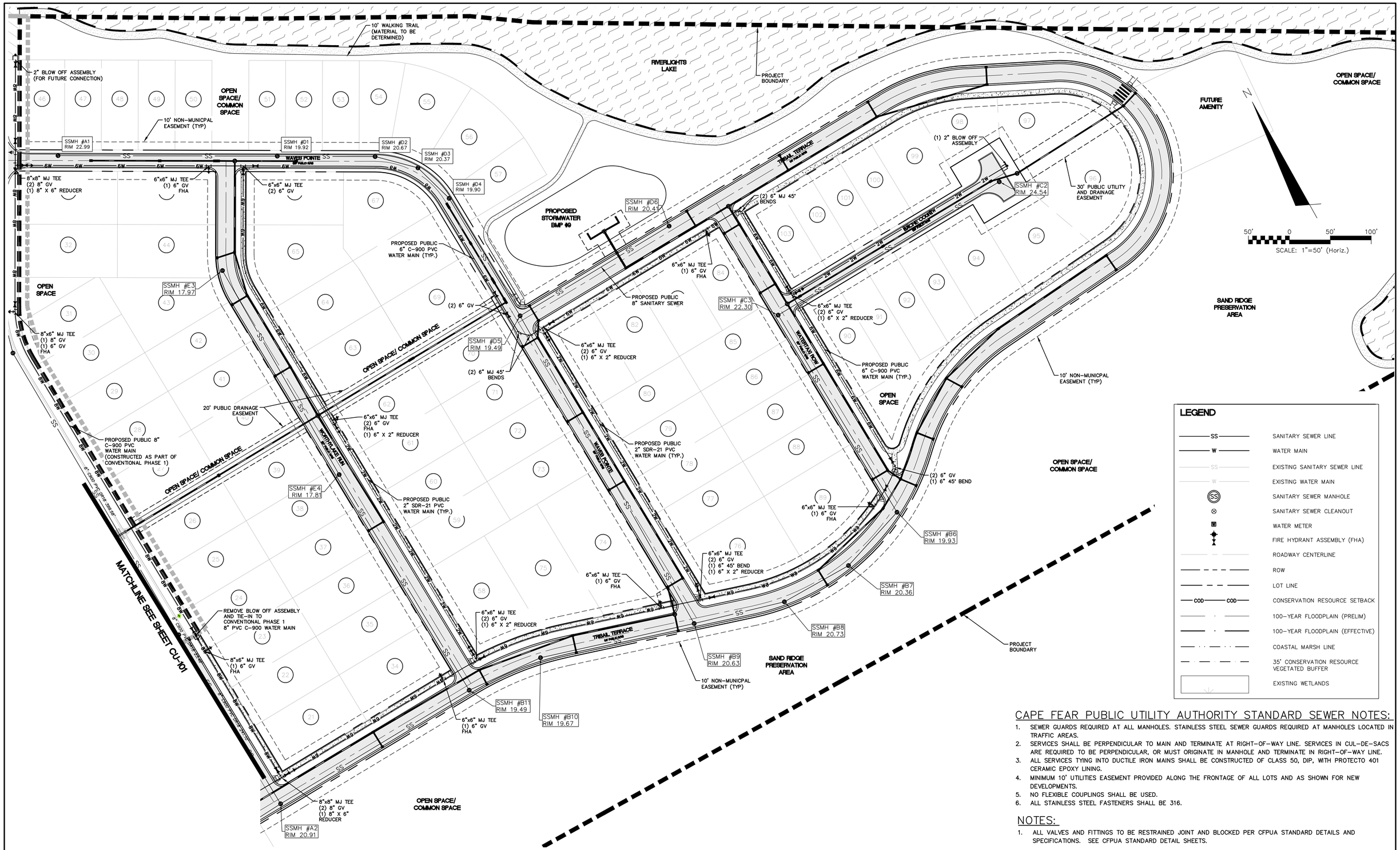

CAPE FEAR PUBLIC UTILITY AUTHORITY STANDARD SEWER NOTES:

1. SEWER GUARDS REQUIRED AT ALL MANHOLES. STAINLESS STEEL SEWER GUARDS REQUIRED AT MANHOLES LOCATED IN TRAFFIC AREAS.
2. SERVICES SHALL BE PERPENDICULAR TO MAIN AND TERMINATE AT RIGHT-OF-WAY LINE. SERVICES IN CUL-DE-SACS ARE REQUIRED TO BE PERPENDICULAR, OR MUST ORIGINATE IN MANHOLE AND TERMINATE IN RIGHT-OF-WAY LINE.
3. ALL SERVICES TYING INTO DUCTILE IRON MAINS SHALL BE CONSTRUCTED OF CLASS 50, DIP, WITH PROTECTO 401 CERAMIC EPOXY LINING.
4. MINIMUM 10' UTILITIES EASEMENT PROVIDED ALONG THE FRONTAGE OF ALL LOTS AND AS SHOWN FOR NEW DEVELOPMENTS.
5. NO FLEXIBLE COUPLINGS SHALL BE USED.
6. ALL STAINLESS STEEL FASTENERS SHALL BE 316.

NOTES:

1. ALL VALVES AND FITTINGS TO BE RESTRAINED JOINT AND BLOCKED PER CFPUA STANDARD DETAILS AND SPECIFICATIONS. SEE CFPUA STANDARD DETAIL SHEETS.

REV.NO.	DESCRIPTIONS	DATE
E	CITY OF WILMINGTON TRC / STORMWATER / CFPUA RE-SUBMITTAL	01/22/2016
D	CITY OF WILMINGTON TRC RE-SUBMITTAL	11/12/2015
C	CITY OF WILMINGTON TRC / STORMWATER / TREE REMOVAL, NEW HANOVER COUNTY EROSION CONTROL AND CFPUA SUBMITTAL	09/16/2015
B	CITY OF WILMINGTON SRB MYLARS	07/27/2015
A	CITY OF WILMINGTON TRC CONCEPT SUBMITTAL	05/06/2015

REVISIONS

SEAL

FINAL DRAWINGS - FOR REVIEW PURPOSES ONLY

SEAL

McKIM&CREED
243 North Front Street
Wilmington, North Carolina 28401
Phone: (910)343-1048, Fax: (910)251-8282
License: F-1222
www.mckimcreed.com

NASH — NORTH AMERICA SEKISUI HOUSE, LLC

RIVERLIGHTS™ by Newland COMMUNITIES

RIVERLIGHTS CONVENTIONAL NEIGHBORHOOD PHASE II

UTILITY PLAN

DATE:	05/06/2015
MCE PROJ. #	02735-0141
DRAWN	TCM/EEM
DESIGNED	KCBE
CHECKED	NJL
PROJ. MGR.	RMC

SCALE
HORIZONTAL: 1"=50'
VERTICAL: N/A

M&C FILE NUMBER CU-102

DRAWING NUMBER 13

STATUS: FINAL DESIGN
ISSUED FOR PERMITTING

REVISION E

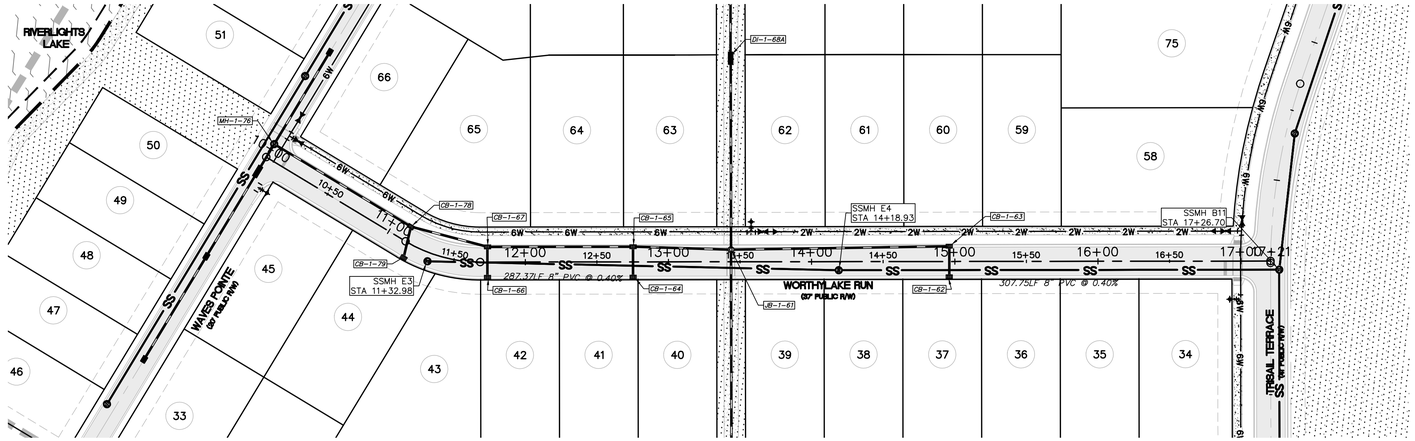

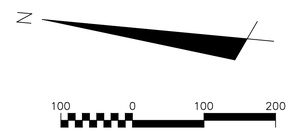

WORTHY LAKE RUN
(STA 10+00 TO 17+20.7)

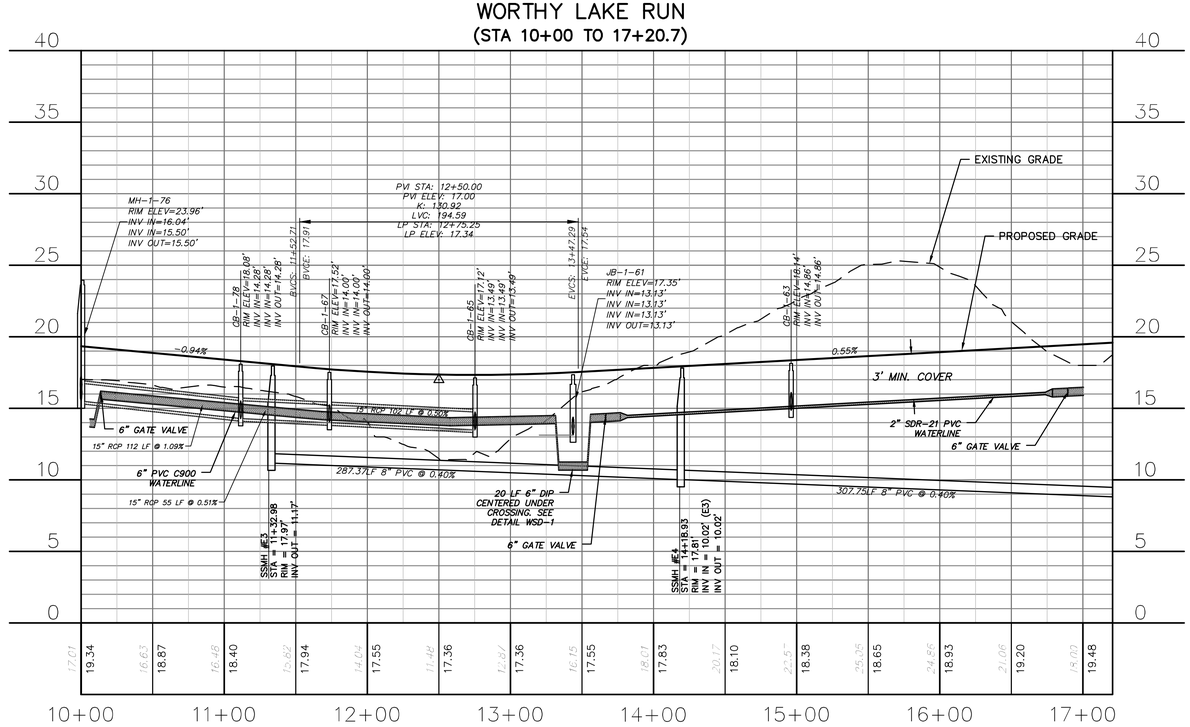

WORTHY LAKE RUN
(STA 10+00 TO 17+20.7)

REV.NO.	DESCRIPTIONS	DATE
E	CITY OF WILMINGTON TRC / STORMWATER / CFPUA RE-SUBMITTAL	01/22/2016
D	CITY OF WILMINGTON TRC RE-SUBMITTAL	11/12/2015
C	CITY OF WILMINGTON TRC / STORMWATER / TREE REMOVAL, NEW HANOVER COUNTY EROSION CONTROL AND CFPUA SUBMITTAL	09/18/2015
B	CITY OF WILMINGTON SRB MYLARS	07/27/2015
A	CITY OF WILMINGTON TRC CONCEPT SUBMITTAL	05/06/2015

REVISIONS

FINAL DRAWINGS - FOR REVIEW PURPOSES ONLY

SEAL

SEAL

McKIM&CREED
243 North Front Street
Wilmington, North Carolina 28401
Phone: (910)343-1048, Fax: (910)251-8282
License: F-1222
www.mckimcreed.com

NASH NORTH AMERICA SEKISUI HOUSE, LLC

RIVERLIGHTS™ by Newland COMMUNITIES

RIVERLIGHTS CONVENTIONAL NEIGHBORHOOD PHASE II

WORTHYLAKE RUN
PLAN AND PROFILE
STA 10+00 TO STA 17+20

DATE:	05/06/2015
MCE PROJ. #	02735-0141
DRAWN	TCM/EEM
DESIGNED	KCBE
CHECKED	NJL
PROJ. MGR.	RMC

SCALE
HORIZONTAL: 1"=50'
VERTICAL: 1"=5'

M&C FILE NUMBER CU-701

DRAWING NUMBER 14

STATUS: FINAL DESIGN
ISSUED FOR PERMITTING

REVISION E

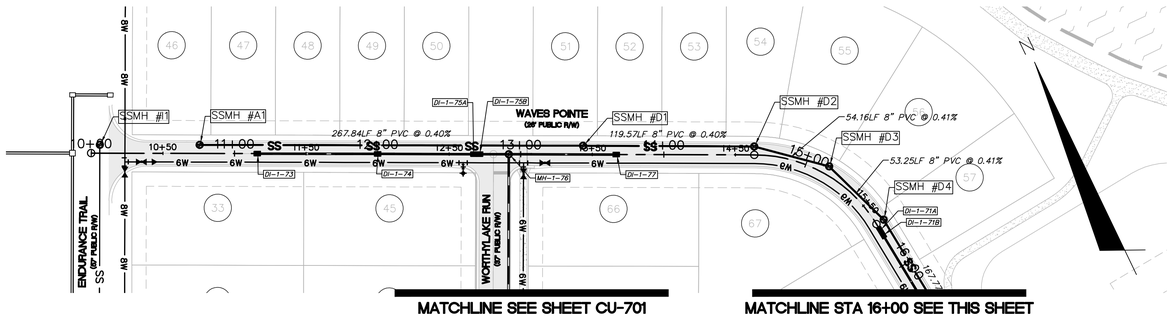

WAVES POINTE
(STA 10+00 TO 16+00)

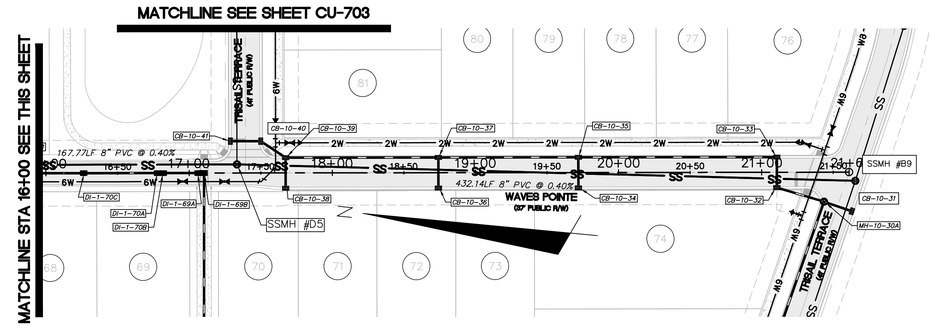

WAVES POINTE
(STA 16+00 TO 21+61.10)

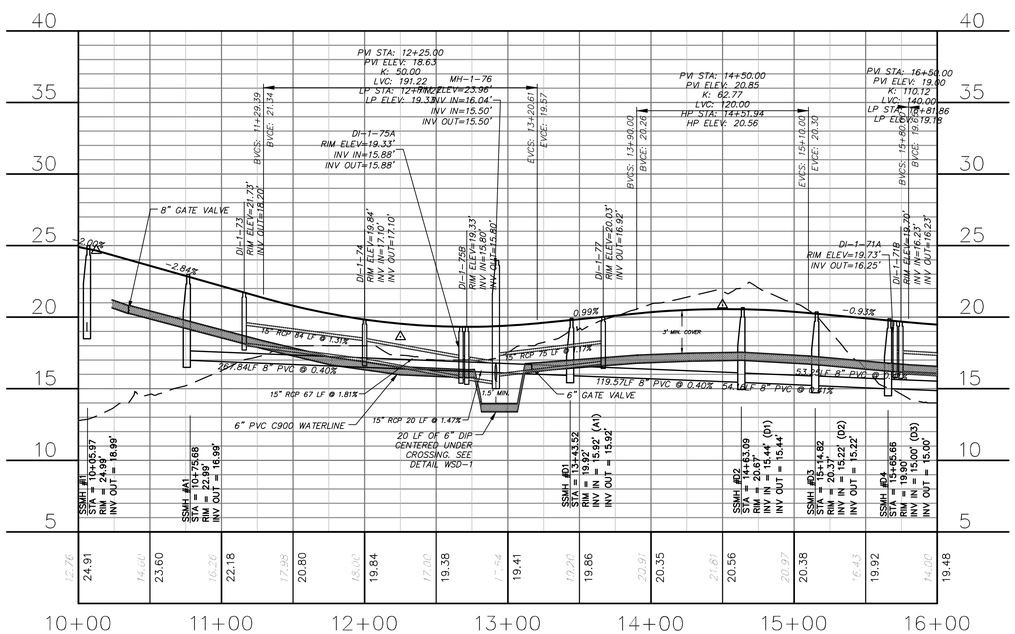

WAVES POINTE
(STA 10+00 TO 16+00)

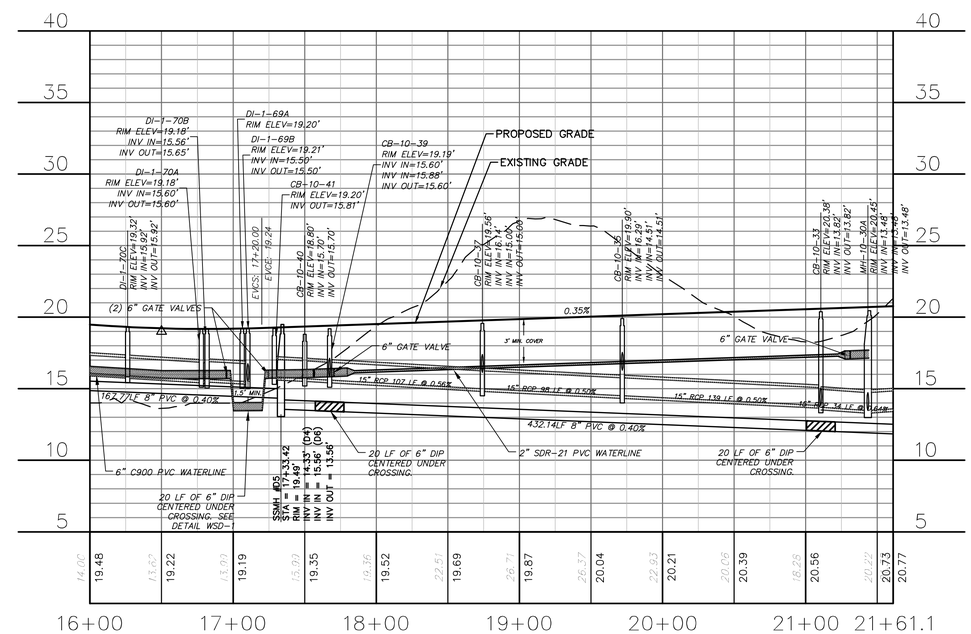

WAVES POINTE
(STA 16+00 TO 21+61.10)

50 0 50 100

REV.NO.	DESCRIPTIONS	DATE
E	CITY OF WILMINGTON TRC / STORMWATER / CFPUA RE-SUBMITTAL	01/22/2016
D	CITY OF WILMINGTON TRC RE-SUBMITTAL	11/12/2015
C	CITY OF WILMINGTON TRC / STORMWATER / TREE REMOVAL, NEW HANOVER COUNTY EROSION CONTROL AND CFPUA SUBMITTAL	09/16/2015
B	CITY OF WILMINGTON SRB MYLARS	07/27/2015
A	CITY OF WILMINGTON TRC CONCEPT SUBMITTAL	05/06/2015

REVISIONS

FINAL DRAWINGS - DO NOT USE FOR CONSTRUCTION

SEAL

McKIM&CREED
243 North Front Street
Wilmington, North Carolina 28401
Phone: (910)343-1048, Fax: (910)251-8282
License: F-1222
www.mckimcreed.com

NASH — NORTH AMERICA SEKISUI HOUSE, LLC

RIVERLIGHTS™ by Newland COMMUNITIES

RIVERLIGHTS CONVENTIONAL NEIGHBORHOOD PHASE II

WAVES POINTE PLAN AND PROFILE STA 10+00 TO STA 21+61

DATE:	05/06/2015
MCE PROJ. #	02735-0141
DRAWN	TCM/EEM
DESIGNED	KCBE
CHECKED	NJL
PROJ. MGR.	RMC

SCALE
HORIZONTAL: 1"=50'
VERTICAL: 1"=5'

MAC FILE NUMBER: CU-702
DRAWING NUMBER: 15

STATUS: FINAL DESIGN
ISSUED FOR PERMITTING
REVISION: E

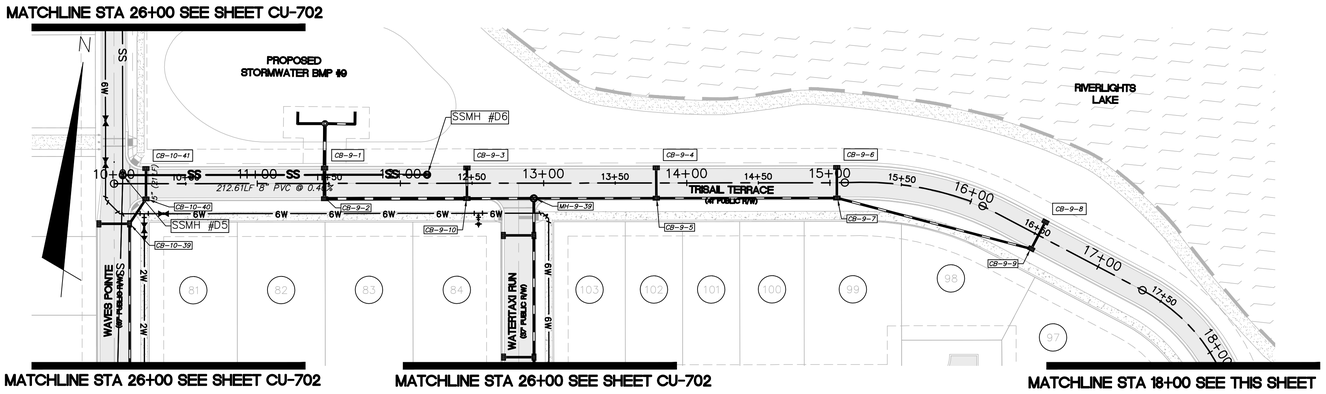

TRISAIL TERRACE
(STA 10+00 TO 18+00)

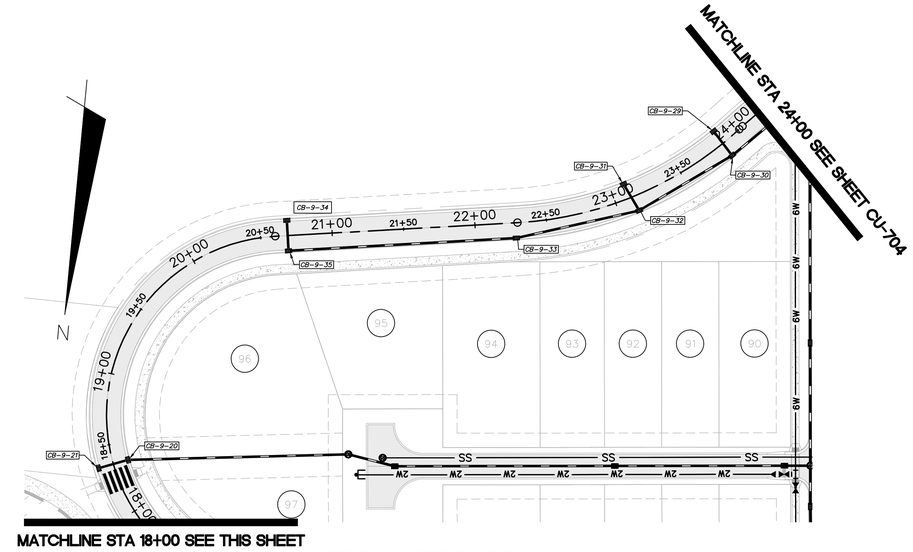

TRISAIL TERRACE
(STA 18+00 TO 24+00)

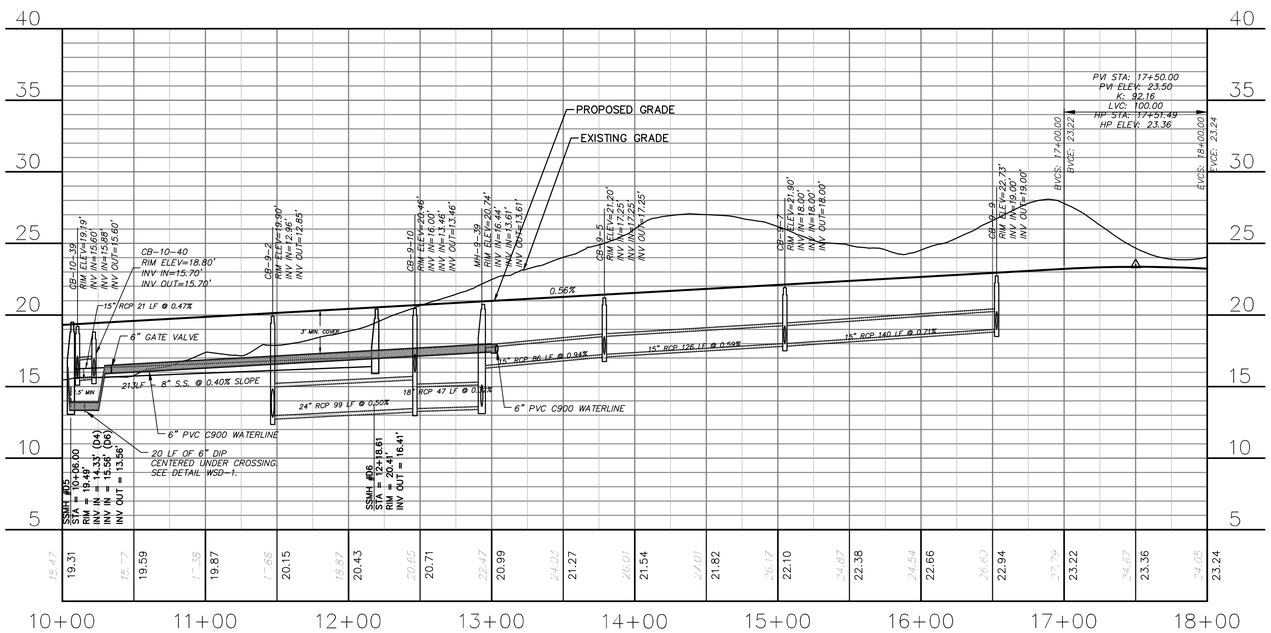

TRISAIL TERRACE
(STA 10+00 TO 18+00)

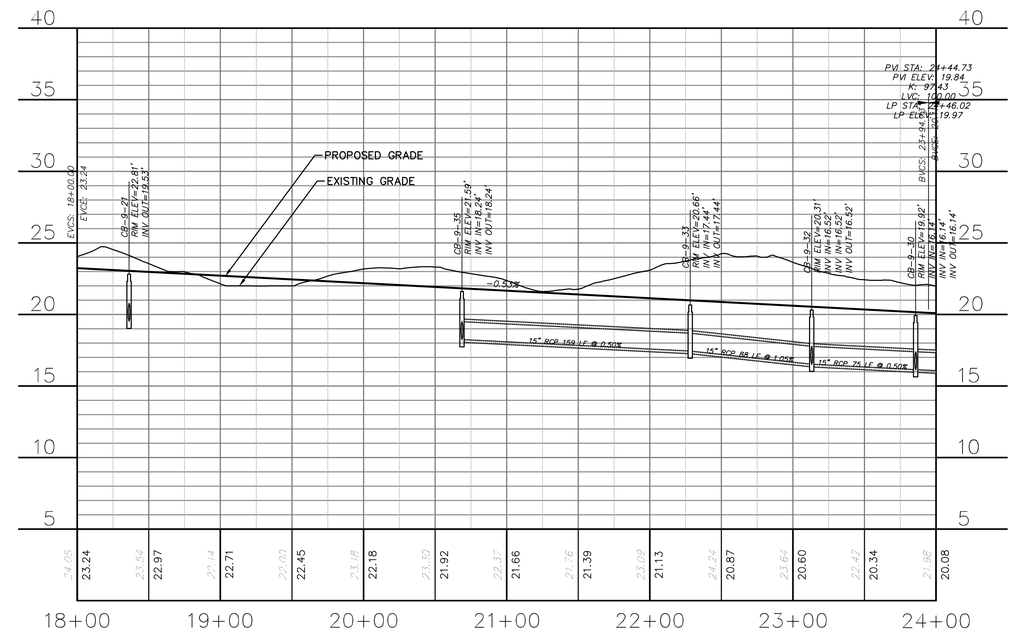

TRISAIL TERRACE
(STA 18+00 TO 24+00)

50 0 50 100

REV.NO.	DESCRIPTIONS	DATE
E	CITY OF WILMINGTON TRC / STORMWATER / CFPUA RE-SUBMITTAL	01/22/2016
D	CITY OF WILMINGTON TRC RE-SUBMITTAL	11/12/2015
C	CITY OF WILMINGTON TRC / STORMWATER / TREE REMOVAL, NEW HANOVER COUNTY EROSION CONTROL AND CFPUA SUBMITTAL	09/16/2015
B	CITY OF WILMINGTON SRB MYLARS	07/27/2015
A	CITY OF WILMINGTON TRC CONCEPT SUBMITTAL	05/06/2015

REVISIONS

SEAL

FINAL DRAWINGS - FOR REVIEW PURPOSES ONLY

SEAL

McKIM&CREED
243 North Front Street
Wilmington, North Carolina 28401
Phone: (910)343-1048, Fax: (910)251-8282
License: F-1222
www.mckimcreed.com

NASH NORTH AMERICA SEKISUI HOUSE, LLC

RIVERLIGHTS™ by Newland COMMUNITIES

RIVERLIGHTS CONVENTIONAL NEIGHBORHOOD PHASE II

TRISAIL TERRACE PLAN AND PROFILE STA 10+00 TO STA 24+00

DATE:	05/06/2015
MCE PROJ. #	02735-0141
DRAWN	TCM/EEM
DESIGNED	KCBE
CHECKED	NJL
PROJ. MGR.	RMC

SCALE
HORIZONTAL: 1"=50'
VERTICAL: 1"=5'

M&C FILE NUMBER CU-703

DRAWING NUMBER 16

STATUS: FINAL DESIGN
ISSUED FOR PERMITTING

REVISION E

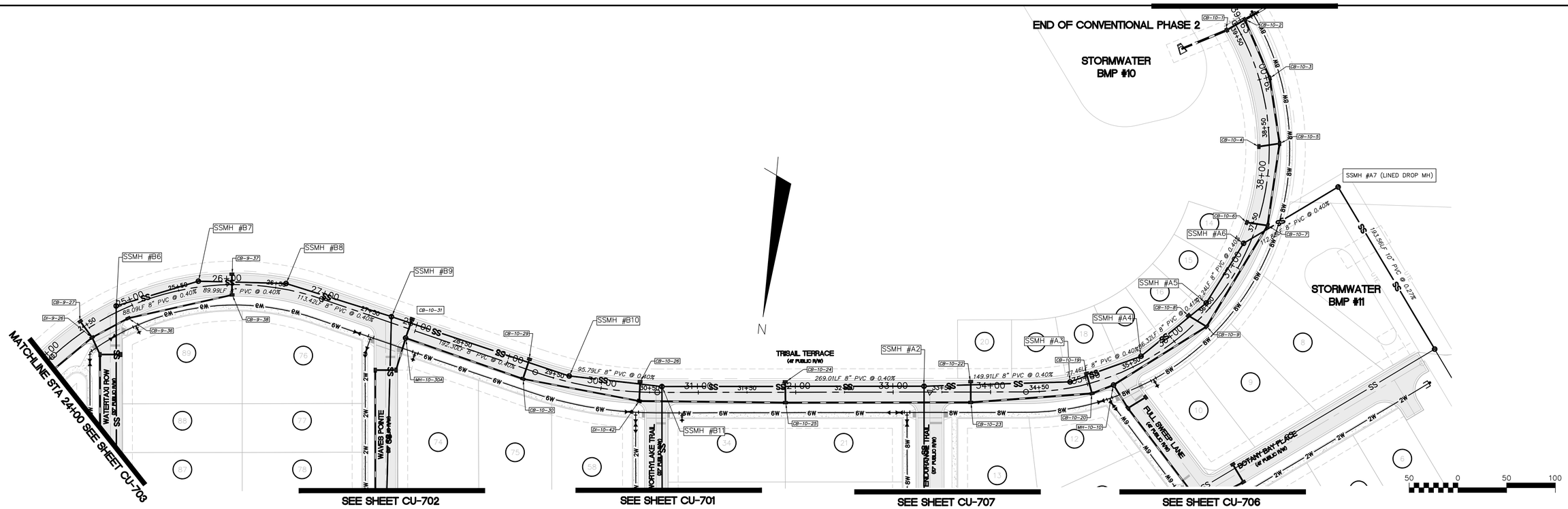

TRISAIL TERRACE (STA 24+00 TO 39+63.1)

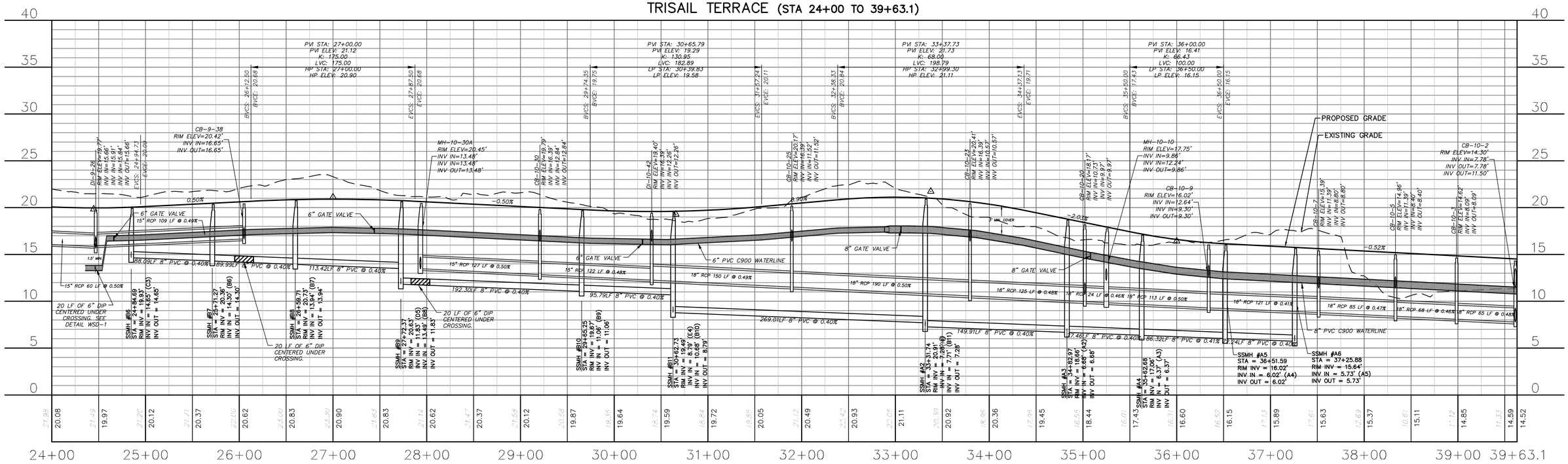

TRISAIL TERRACE (STA 24+00 TO 39+63.1)

REV.NO.	DESCRIPTIONS	DATE
E	CITY OF WILMINGTON TRC / STORMWATER / CFPUA RE-SUBMITTAL	01/22/2016
D	CITY OF WILMINGTON TRC RE-SUBMITTAL	11/12/2015
C	CITY OF WILMINGTON TRC / STORMWATER / TREE REMOVAL, NEW HANOVER COUNTY EROSION CONTROL AND CFPUA SUBMITTAL	09/16/2015
B	CITY OF WILMINGTON SRB MYLARS	07/27/2015
A	CITY OF WILMINGTON TRC CONCEPT SUBMITTAL	05/06/2015

REVISIONS

FINAL DRAWINGS - FOR REVIEW PURPOSES ONLY

SEAL

SEAL

McKIM&CREED
243 North Front Street
Wilmington, North Carolina 28401
Phone: (910)343-1048, Fax: (910)251-8282
License: F-1222
www.mckimcreed.com

NASH — NORTH AMERICA SEKISUI HOUSE, LLC

RIVERLIGHTS™ by Newland COMMUNITIES

RIVERLIGHTS CONVENTIONAL NEIGHBORHOOD PHASE II

TRISAIL TERRACE PLAN AND PROFILE STA 24+00 TO STA 39+63

DATE:	05/06/2015
MCE PROJ. #	02735-0141
DRAWN	TCM/EEM
DESIGNED	KCBE
CHECKED	NJL
PROJ. MGR.	RMC

SCALE
HORIZONTAL: 1"=50'
VERTICAL: 1"=5'

M&C FILE NUMBER CU-704
DRAWING NUMBER 17

STATUS: FINAL DESIGN
ISSUED FOR PERMITTING
REVISION E

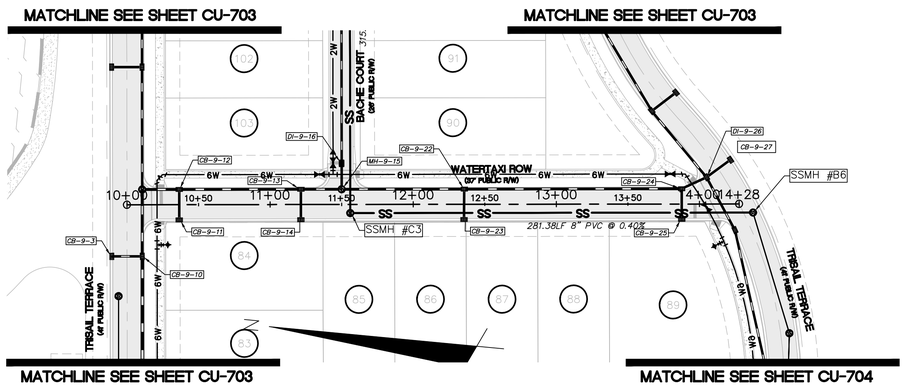

WATERTAXI ROW
(STA 10+00 TO 14+27.65)

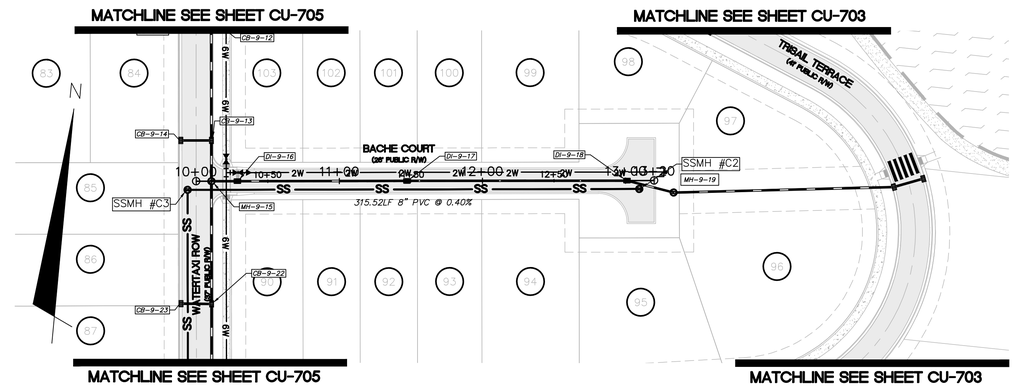

BACHE COURT
(STA 10+00 TO 13+19.96)

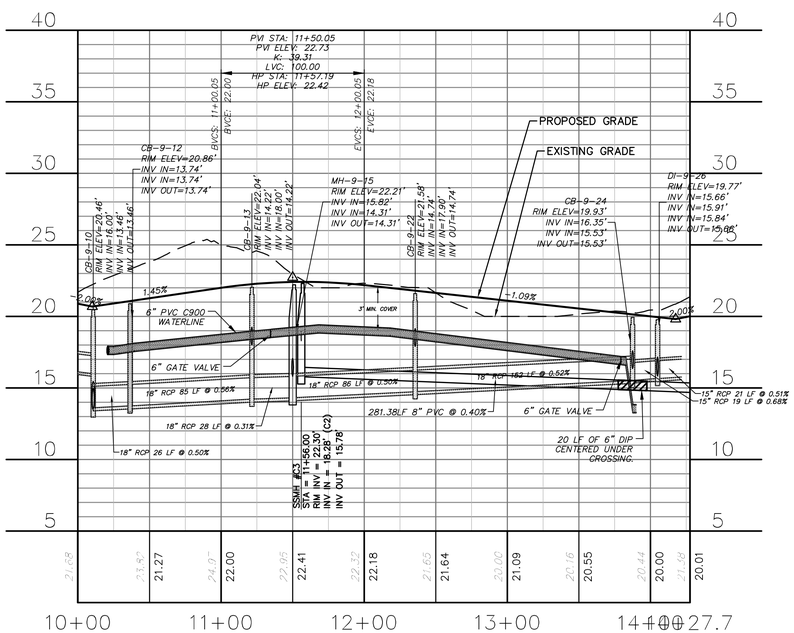

WATERTAXI ROW
(STA 10+00 TO 14+27.65)

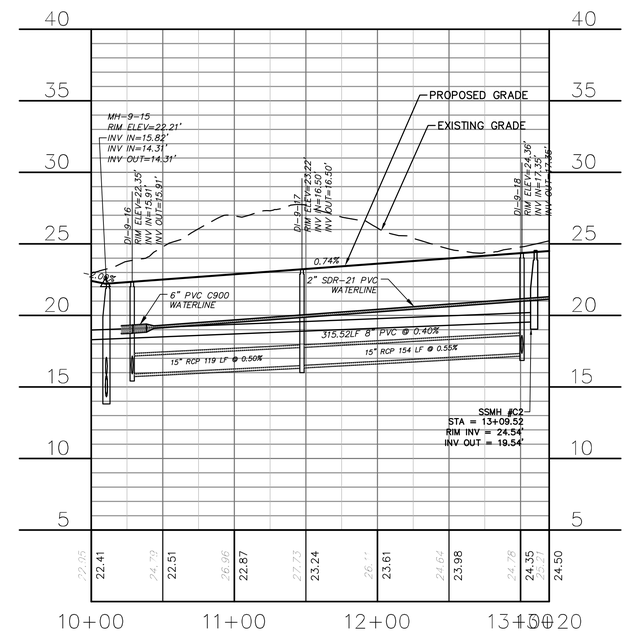

BACHE COURT
(STA 10+00 TO 13+19.96)

50 0 50 100

REV.NO.	DESCRIPTIONS	DATE
E	CITY OF WILMINGTON TRC / STORMWATER / CFPUA RE-SUBMITTAL	01/22/2016
D	CITY OF WILMINGTON TRC RE-SUBMITTAL	11/12/2015
C	CITY OF WILMINGTON TRC / STORMWATER / TREE REMOVAL, NEW HANOVER COUNTY EROSION CONTROL AND CFPUA SUBMITTAL	09/16/2015
B	CITY OF WILMINGTON SRB MYLARS	07/27/2015
A	CITY OF WILMINGTON TRC CONCEPT SUBMITTAL	05/06/2015

REVISIONS

SEAL

FINAL DRAWINGS - FOR REVIEW PURPOSES ONLY

SEAL

McKIM&CREED
243 North Front Street
Wilmington, North Carolina 28401
Phone: (910)343-1048, Fax: (910)251-8282
License: F-1222
www.mckimcreed.com

NASH — NORTH AMERICA SEKISUI HOUSE, LLC

RIVERLIGHTS™ by Newland COMMUNITIES

RIVERLIGHTS CONVENTIONAL NEIGHBORHOOD PHASE II

WATERTAXI ROW
BACHE COURT
PLAN AND PROFILE

DATE:	05/06/2015
MCE PROJ. #	02735-0141
DRAWN	TCM/EEM
DESIGNED	KCBE
CHECKED	NJL
PROJ. MGR.	RMC

SCALE
HORIZONTAL: 1"=50'
VERTICAL: 1"=5'

MAC FILE NUMBER CU-705
DRAWING NUMBER 18

STATUS: FINAL DESIGN
ISSUED FOR PERMITTING
REVISION E

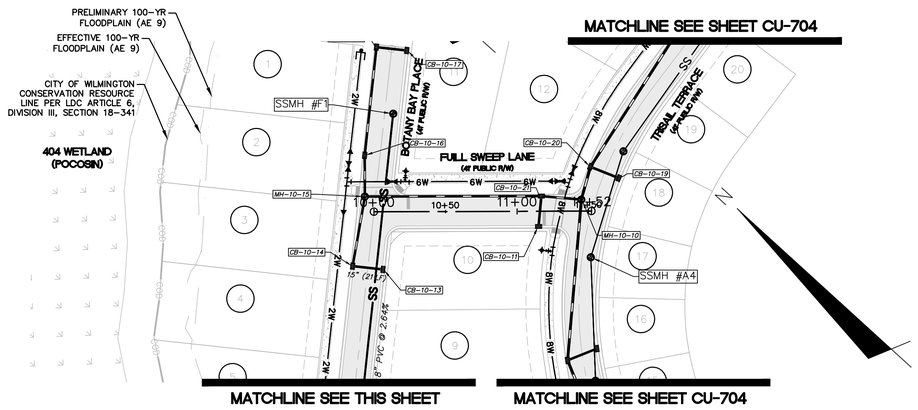

FULL SWEEP LANE
(STA 10+00 TO 11+52.06)

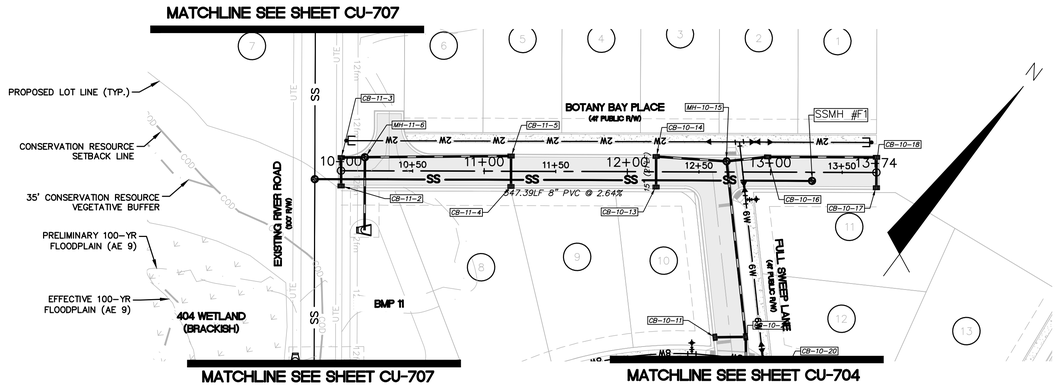

BOTANY BAY PLACE
(STA 10+00 TO 13+74.00)

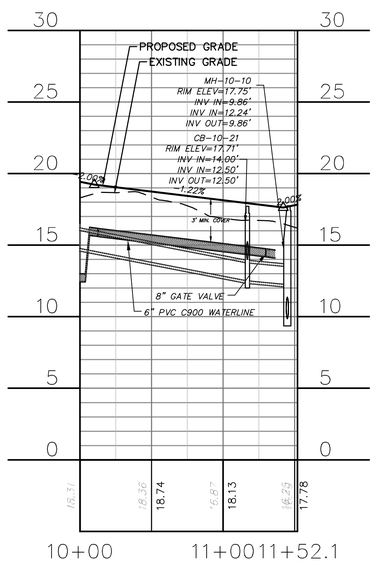

FULL SWEEP LANE
(STA 10+00 TO 11+52.06)

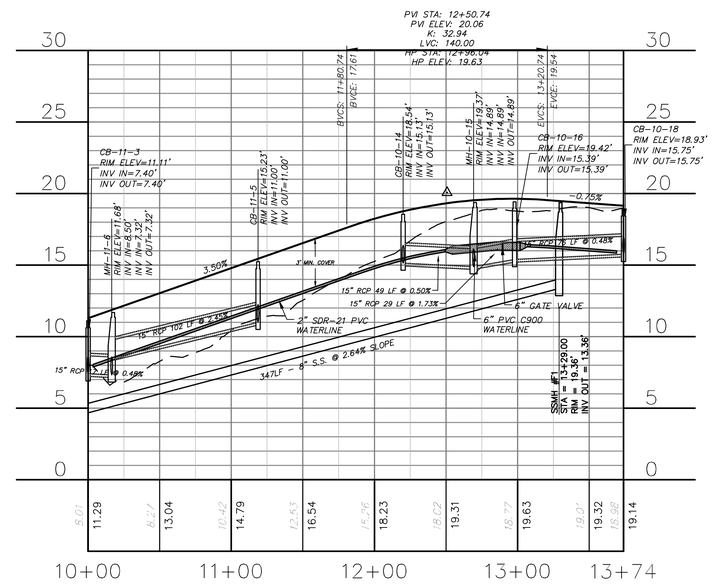

BOTANY BAY PLACE
(STA 10+00 TO 13+74.00)

50 0 50 100

REV.NO.	DESCRIPTIONS	DATE
E	CITY OF WILMINGTON TRC / STORMWATER / CFPUA RE-SUBMITTAL	01/22/2016
D	CITY OF WILMINGTON TRC RE-SUBMITTAL	11/12/2015
C	CITY OF WILMINGTON TRC / STORMWATER / TREE REMOVAL, NEW HANOVER COUNTY EROSION CONTROL AND CFPUA SUBMITTAL	09/16/2015
B	CITY OF WILMINGTON SRB MYLARS	07/27/2015
A	CITY OF WILMINGTON TRC CONCEPT SUBMITTAL	05/06/2015

REVISIONS

SEAL

FINAL DRAWINGS - FOR REVIEW PURPOSES ONLY

SEAL

McKIM&CREED
243 North Front Street
Wilmington, North Carolina 28401
Phone: (910)343-1048, Fax: (910)251-8282
License: F-1222
www.mckimcreed.com

NASH — NORTH AMERICA SEKISUI HOUSE, LLC

RIVERLIGHTS™ by Newland COMMUNITIES

RIVERLIGHTS CONVENTIONAL NEIGHBORHOOD PHASE II

FULL SWEEP LANE
BOTANY BAY PLACE
PLAN AND PROFILE

DATE:	05/06/2015
MCE PROJ. #	02735-0141
DRAWN	TCM/EEM
DESIGNED	KCBE
CHECKED	NJL
PROJ. MGR.	RMC

SCALE
HORIZONTAL: 1"=50'
VERTICAL: 1"=5'

M&C FILE NUMBER CU-706
DRAWING NUMBER 19

STATUS: FINAL DESIGN
ISSUED FOR PERMITTING
REVISION E

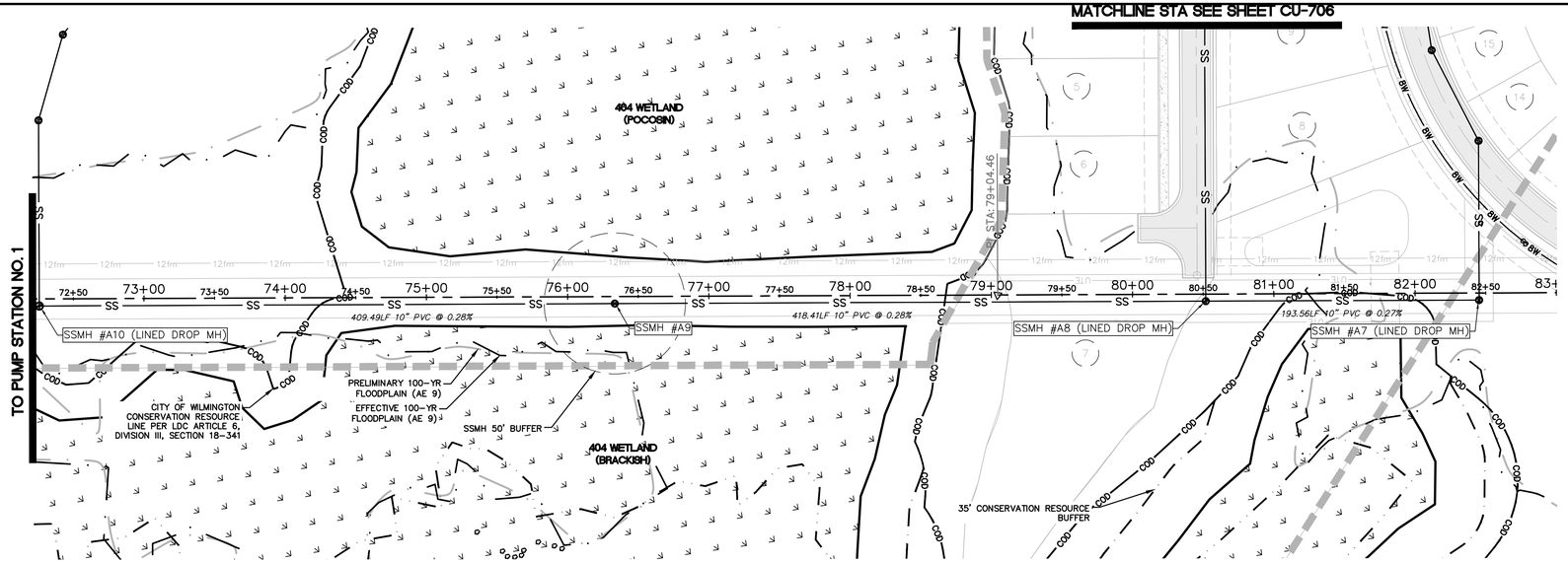

EXISTING RIVER ROAD
(STA 72+25.00 TO 83+50.00)

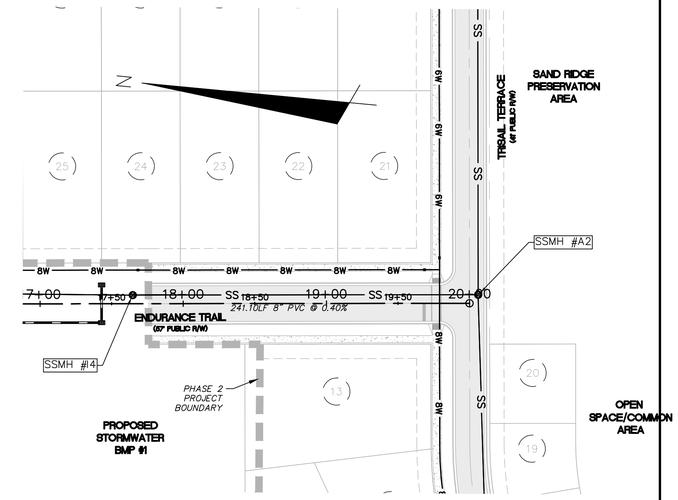

ENDURANCE TRAIL
(STA 17+75.69 TO 20+00.00)

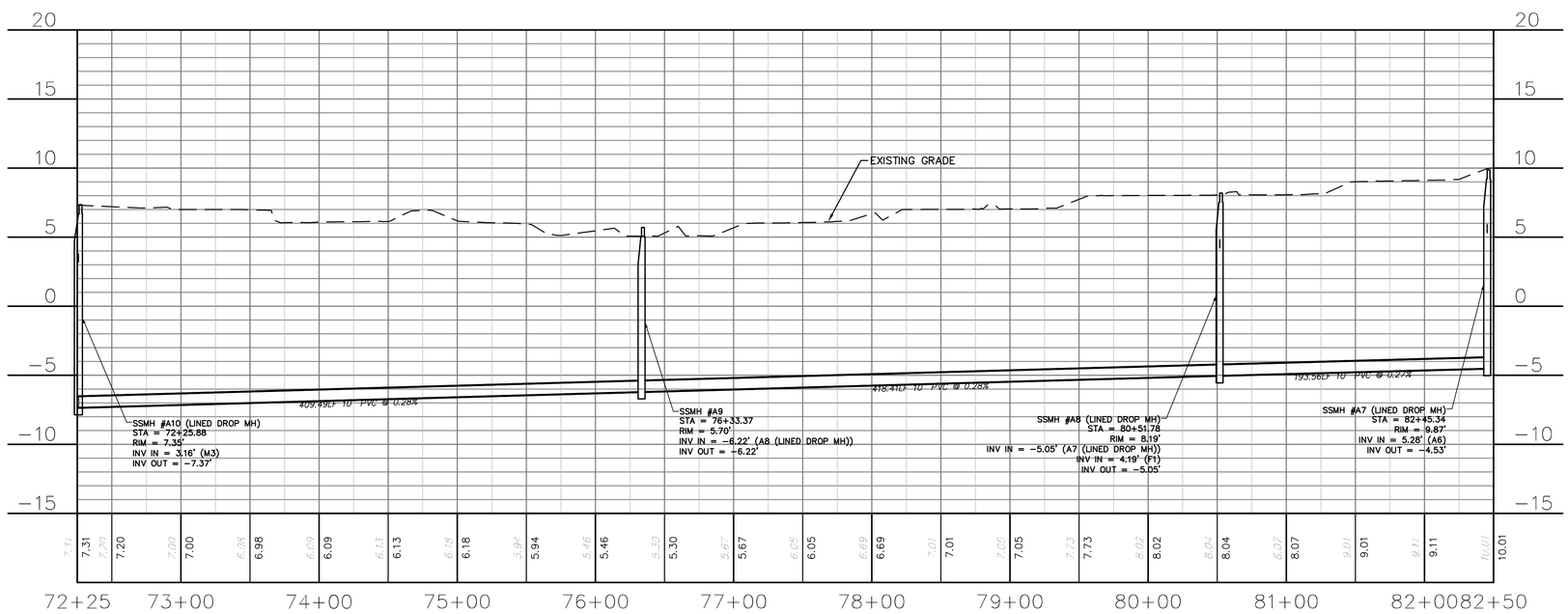

EXISTING RIVER ROAD
(STA 72+25.00 TO 83+50.00)

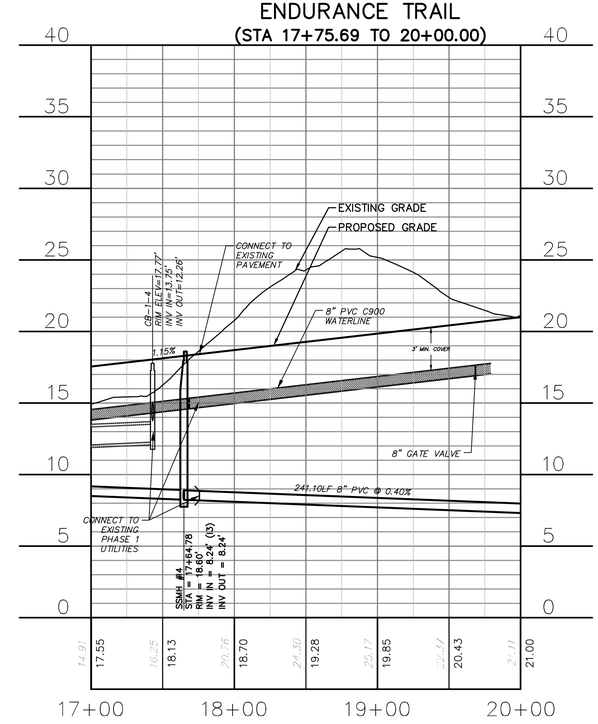

ENDURANCE TRAIL
(STA 17+75.69 TO 20+00.00)

CRITERIA FOR SANITARY SEWER MANHOLES WITHIN 50-FT OF WETLANDS

1. MANHOLES SHALL BE PROVIDED WITH A WATERTIGHT FRAME AND COVER WITH GASKET.
2. ALL MANHOLE SEAMS SHALL BE EXTERNALLY TAPED/SEALED.
3. MANHOLES SHALL BE PROVIDED WITH A FULL WATERPROOF INTERIOR COATING/LINING.
4. WATERTIGHT PIPE CONNECTIONS SHALL BE PROVIDED CONSISTING OF A FLEXIBLE RUBBER BOOT OR COMPRESSION TYPE CONNECTOR.
5. ALL MANHOLES SHALL BE TESTED IN ACCORDANCE WITH ASTM C1244 "STANDARD TEST METHOD FOR CONCRETE SEWER MANHOLES BY THE NEGATIVE AIR PRESSURE (VACUUM) TEST PRIOR TO BACKFILL".
6. "DOG HOUSE" TYPE MANHOLES SHALL NOT BE USED.
7. ALL MANHOLES NOT INCLUDED AS PART OF A USACOE 404 PERMIT OR DIVISION 401 CERTIFICATION SHALL MAINTAIN A SEPARATION OF NO LESS THAN 10 FEET FROM WETLANDS.

EXISTING RIVER ROAD
(STA 72+25.00 TO 83+50.00)

50 0 50 100

REV.NO.	DESCRIPTIONS	DATE
E	CITY OF WILMINGTON TRC / STORMWATER / CFPUA RE-SUBMITTAL	01/22/2016
D	CITY OF WILMINGTON TRC RE-SUBMITTAL	11/12/2015
C	CITY OF WILMINGTON TRC / STORMWATER / TREE REMOVAL, NEW HANOVER COUNTY EROSION CONTROL AND CFPUA SUBMITTAL	09/16/2015
B	CITY OF WILMINGTON SRB MYLARS	07/27/2015
A	CITY OF WILMINGTON TRC CONCEPT SUBMITTAL	05/06/2015

REVISIONS

SEAL

FINAL DRAWINGS - FOR REVIEW PURPOSES ONLY

SEAL

McKIM&CREED
243 North Front Street
Wilmington, North Carolina 28401
Phone: (910)343-1048, Fax: (910)251-8282
License: F-1222
www.mckimcreed.com

NORTH AMERICA SEKISUI HOUSE, LLC

RIVERLIGHTS™ by Newland COMMUNITIES

RIVERLIGHTS CONVENTIONAL NEIGHBORHOOD PHASE II

ENDURANCE TRAIL
PLAN AND PROFILE
STA 17+76 TO STA 20+00

DATE:	05/06/2015
MCE PROJ. #	02735-0141
DRAWN	TCM/EEM
DESIGNED	KCBE
CHECKED	NJL
PROJ. MGR.	RMC

SCALE
HORIZONTAL: 1"=50'
VERTICAL: 1"=5'

M&C FILE NUMBER CU-707
DRAWING NUMBER 20

STATUS: FINAL DESIGN
ISSUED FOR PERMITTING
REVISION E

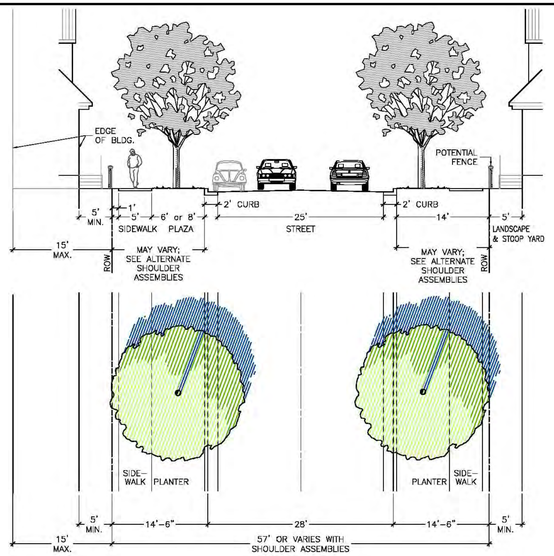

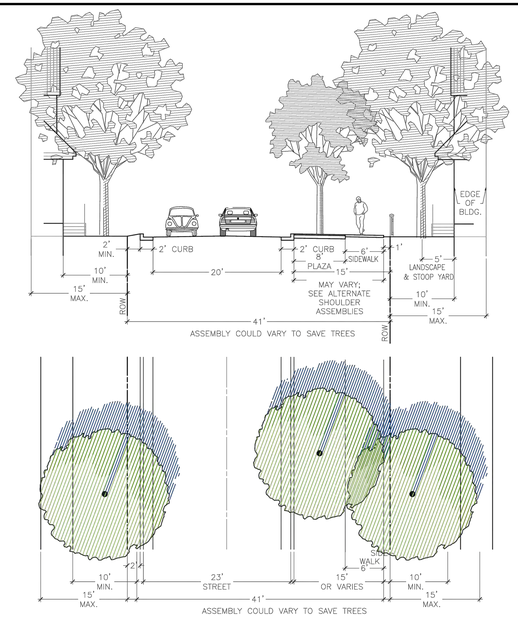

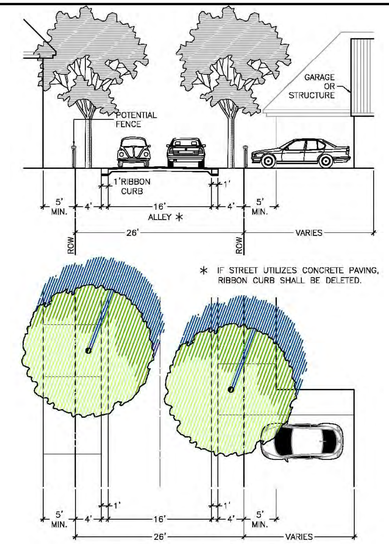

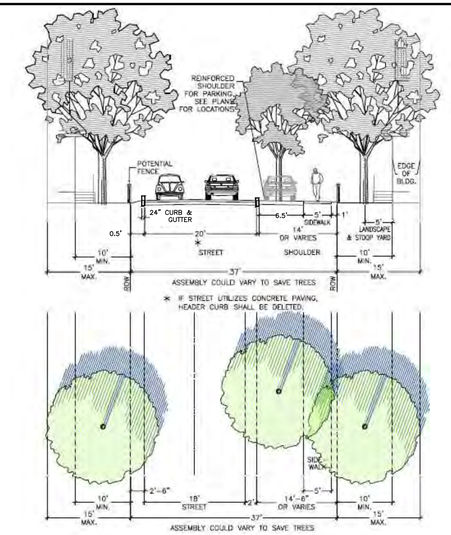

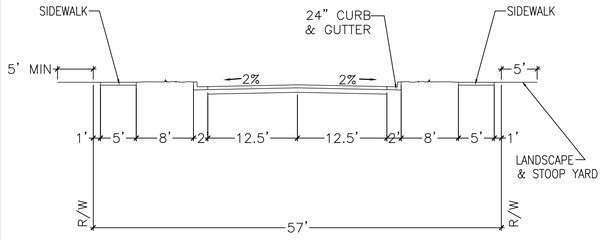

57' RIGHT-OF-WAY

(PUBLIC)

Right-of-Way Width	57 feet
Asphalt Width	25 feet
Design Speed	25 MPH
Traffic Lanes	2 lanes
Parking Lanes	One Side @ 8 feet, marked
Curb Radius	25 feet
Walkway Type	5 foot sidewalk
Curb Type	Curb A
Landscape Type	Irregular spacing-50'oc max

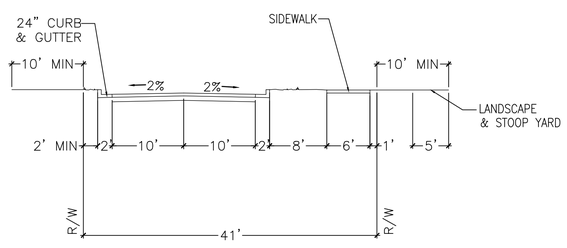

41' RIGHT-OF-WAY

(PUBLIC)

Right-of-Way Width	41 feet
Asphalt Width	20 feet
Design Speed	25 MPH
Traffic Lanes	2 lanes
Parking Lanes	No Parking
Curb Radius	10 feet
Walkway Type	6 foot sidewalk
Curb Type	Curb A
Landscape Type	Irregular Tree Spacing

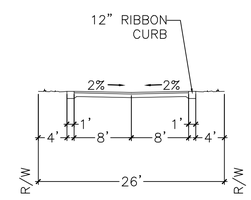

26' RIGHT-OF-WAY

(PUBLIC)

Right-of-Way Width	26 feet
Asphalt Width	16 feet
Design Speed	25 MPH
Traffic Lanes	2 lanes
Parking Lanes	No Parking
Curb Radius	5 feet
Walkway Type	N/A
Curb Type	12" Ribbon Curb
Landscape Type	Irregular Tree Spacing

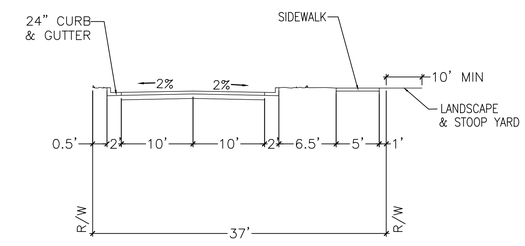

37' RIGHT-OF-WAY

(PUBLIC)

Right-of-Way Width	37 feet
Asphalt Width	20 feet
Design Speed	25 MPH
Traffic Lanes	2 lanes
Parking Lanes	On Shoulder
Curb Radius	10 feet
Walkway Type	5 foot Sidewalk
Curb Type	Curb A
Landscape Type	Irregular Tree Spacing

REV.NO.	DESCRIPTIONS	DATE
E	CITY OF WILMINGTON TRC / STORMWATER / CFPUA RE-SUBMITTAL	01/22/2016
D	CITY OF WILMINGTON TRC RE-SUBMITTAL	11/12/2015
C	CITY OF WILMINGTON TRC / STORMWATER / TREE REMOVAL, NEW HANOVER COUNTY EROSION CONTROL AND CFPUA SUBMITTAL	09/16/2015
B	CITY OF WILMINGTON SRB MYLARS	07/27/2015
A	CITY OF WILMINGTON TRC CONCEPT SUBMITTAL	05/06/2015

REVISIONS

FINAL DRAWINGS - FOR REVIEW PURPOSES ONLY

SEAL

SEAL

McKIM&CREED
243 North Front Street
Wilmington, North Carolina 28401
Phone: (910)343-1048, Fax: (910)251-8282
License: F-1222
www.mckimcreed.com

NASH
NORTH AMERICA SEKISUI HOUSE, LLC
RIVERLIGHTS™ by Newland COMMUNITIES

RIVERLIGHTS CONVENTIONAL NEIGHBORHOOD PHASE II

TYPICAL CROSS SECTIONS

DATE:	05/06/2015
MCE PROJ. #	02735-0141
DRAWN	TCM/EEM
DESIGNED	KCBE
CHECKED	NJL
PROJ. MGR.	RMC

SCALE
HORIZONTAL: N/A
VERTICAL: N/A

M&C FILE NUMBER CT-301
DRAWING NUMBER 21

STATUS: FINAL DESIGN
ISSUED FOR PERMITTING
REVISION E

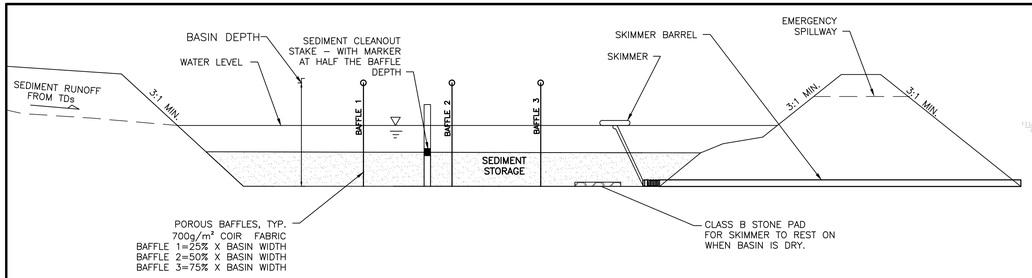

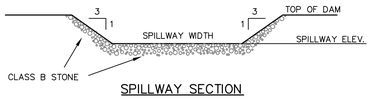

SPILLWAY SECTION

SKIMMER SEDIMENT BASINS

PHASE 1: SB–1
PHASE 2: BMP 9 AND 11

NOTES:

1. BAFFLE MATERIAL SHALL BE MATERIALS SUCH AS 700 G/M COIR EROSION BLANKET OR COIR MESH
2. THE BAFFLE MATERIAL NEEDS TO BE SECURED AT THE BOTTOM AND SIDES USING STAPLES OR BY TRENCHING AS FOR SILT FENCE.
3. LOCATE THE EMERGENCY SPILLWAY ON NATURAL SOILS. AVOID PLACING IT THROUGH FILL MATERIAL WHEREVER POSSIBLE.
4. ALL RUNOFF MUST DISCHARGE TO THE INLET SIDE OF THE BASIN. DISCHARGE RUNOFF INTO THE BASIN IN A MANNER THAT MINIMIZES EROSION.

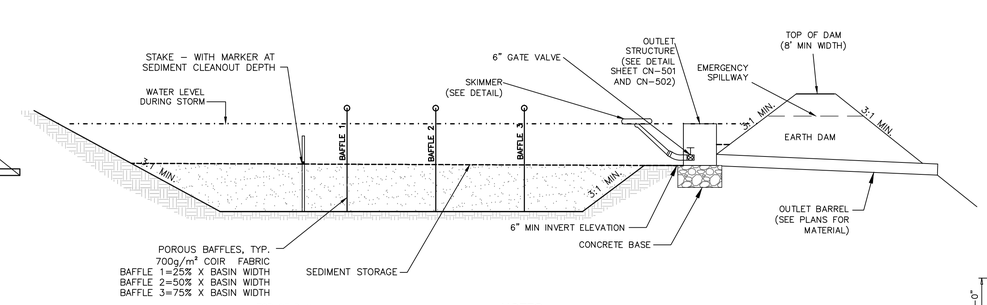

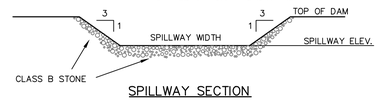

SPILLWAY SECTION

SKIMMER SEDIMENT BASINS

PHASE 2: BMP 1 AND 10

NOTES:

ORIFICE SIZES ARE FOR THE FAIRCLOTH SKIMMER. IF ANOTHER TYPE OF SKIMMER IS USED THE DEVICE MUST BE ABLE TO DRAIN THE BASIN WITHIN 24 – 72 HOURS.

NOTES:

1. BAFFLE MATERIAL SHALL BE MATERIALS SUCH AS 700 G/M COIR EROSION BLANKET, COIR MESH, OR TREE PROTECTION FENCE FOLDED OVER TO REDUCE PORE SIZE.
2. THE BAFFLE MATERIAL NEEDS TO BE SECURED AT THE BOTTOM AND SIDES USING STAPLES OR BY TRENCHING AS FOR SILT FENCE.
3. LOCATE THE EMERGENCY SPILLWAY ON NATURAL SOILS. AVOID PLACING IT THROUGH FILL MATERIAL WHEREVER POSSIBLE.
4. ALL RUNOFF MUST DISCHARGE TO THE INLET SIDE OF THE BASIN. DISCHARGE RUNOFF INTO THE BASIN IN A MANNER THAT MINIMIZES EROSION.
5. PHASE 2 SKIMMER CONNECTION WILL BE MADE AT THE INVERT OF THE BOTTOM OF THE STORMWATER STRUCTURE AS SHOWN IN SHEETS CN–501 THROUGH CN–504.

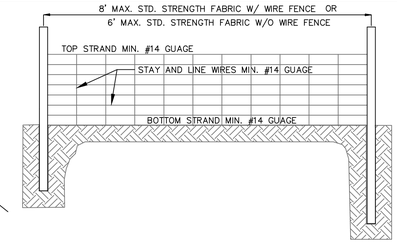

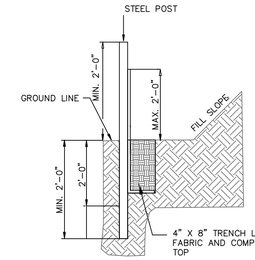

NOTES:
1. WIRE FENCE (IF USED) SHALL BE MINUMUM 14 GAUGE WITH A MAXIMUM MESH OPENING OF 6–INCHES.
2. SYNTHETIC FILTER FABRIC OF AT LEAST 95% BY WEIGHT OF POLYOLEFINS OR POLYESTER, WHICH IS CERTIFIED BY THE MANUFACTURER OR SUPPLIER AS CONFORMING TO THE REQUIREMENTS IN ASTM D 6461 AND ALSO SHOULD CONTAIN ULTRAVIOLET RAY INHIBITORS AND STABILIZERS ACCORDING TO ASTM D 4355.
3. SEE THE NC EROSION CONTROL MANUAL FOR SPECIFICATIONS INSTALLING SEDIMENT FENCE USING THE SLICING METHOD MACHINERY.

TEMPORARY SILT FENCE

NOT TO SCALE

SKIMMER BASIN CALCULATION TABLE (PHASE 1)

Skimmer No.	Drainage Area ac	Rational C Runoff Coeff.	I10 Intensity in/hr	Q10 Peak Flow cfs		Required SA (325 x Q10) sf	Provided SA sf	Required Vol (1800cf/ac x DA) cf	Provided Vol cf	Storage Depth ft	Storage Vol Drained cf		Weir Width ft
SB-1	3.98	0.30	7.23	8.64		2,808	2,895	7,170	7,801	3.00	4,559		10.0

FAIRCLOTH SKIMMER SIZE CALCULATION

Skimmer No.	Dewatering Time (days)	Skimmer Outflow cf/day	Skimmer Size in	Orifice Diameter in	Orifice Radius in	Barrel Outflow gpm	Barrel Pipe in
SB-1	3	1,520	1.5	1.4	0.7	7.9	4.0

Faircloth Skimmer Selection Table		
Skimmer Size in	Outflow Qmax cf/day	Head ft
1.5	1,728	0.125
2	3,283	0.167
2.5	6,234	0.208
3	9,774	0.250
4	20,109	0.333

NOTES:
1. Q10 Peak Flow were taken from Rational Method.
2. Required Surface Areas and Volumes were taken from NCDENR ESC Manual.
3. Faircloth Skimmer Selection Table taken from Table 4-2. NCDOT Level III-A Design of Sediment & Erosion Control Plans Manual
4. Emergency Weir Width taken from Skimmer Basin Criteria Section of NCDENR ESC Manual Table and/or Hydraulic Routing of the basin to ensure non-erosive velocity.
5. Minimum Barrel Pipe on the Skimmer is 4-inches. (On a 1% slope the capacity is 100 GPM)
6. Skimmer Orifice Diameter / Radius were obtained using the Faircloth Skimmer sizinf spreadsheet (obtained from their website: http://www.fairclothskimmer.com/skimmer-sizing)

SKIMMER BASIN CALCULATION TABLE (PHASE 2)

Skimmer No.	Drainage Area ac	Rational C Runoff Coeff.	I10 Intensity in/hr	Q10 Peak Flow cfs		Required SA (325 x Q10) sf	Provided SA sf	Required Vol (1800cf/ac x DA) cf	Provided Vol cf	Storage Depth ft	Storage Vol Drained cf		Weir Width ft
BMP-1	23.65	0.56	7.23	95.75		31,120	31,120	42,570	42,570	3.00	42,570		20.0
BMP-9	9.23	0.50	7.23	33.37		10,844	10,844	16,614	16,614	3.00	16,614		20.0
BMP-10	20.53	0.36	7.23	53.44		17,367	17,367	36,954	36,954	3.00	36,954		20.0
BMP-11	1.10	0.65	7.23	5.17		1,680	1,680	1,980	1,980	3.00	1,980		6.0

FAIRCLOTH SKIMMER SIZE CALCULATION

Skimmer No.	Dewatering Time (days)	Skimmer Outflow cf/day	Skimmer Size in	Orifice Diameter in	Orifice Radius in	Barrel Outflow gpm	Barrel Pipe in
BMP-1	3	14,190	4.0	3.4	1.7	73.7	4.0
BMP-9	3	5,538	2.5	2.4	1.2	28.8	4.0
BMP-10	3	12,318	4.0	3.1	1.6	64.0	4.0
BMP-11	3	660	1.5	0.9	0.5	3.4	4.0

Faircloth Skimmer Selection Table		
Skimmer Size in	Outflow Qmax cf/day	Head ft
1.5	1,728	0.125
2	3,283	0.167
2.5	6,234	0.208
3	9,774	0.250
4	20,109	0.333

NOTES:
1. Q10 Peak Flow were taken from Rational Method.
2. Required Surface Areas and Volumes were taken from NCDENR ESC Manual.
3. Faircloth Skimmer Selection Table taken from Table 4-2. NCDOT Level III-A Design of Sediment & Erosion Control Plans Manual
4. Emergency Weir Width taken from Skimmer Basin Criteria Section of NCDENR ESC Manual Table and/or Hydraulic Routing of the basin to ensure non-erosive velocity.
5. Minimum Barrel Pipe on the Skimmer is 4-inches. (On a 1% slope the capacity is 100 GPM)
6. Skimmer Orifice Diameter / Radius were obtained using the Faircloth Skimmer sizinf spreadsheet (obtained from their website: http://www.fairclothskimmer.com/skimmer-sizing)

SILT FENCE CALCULATION TABLE

SILT FENCE No.	Drainage Area ac	Length ft	Acre per 100 ft	0.25 Acre per 100 ft YES/NO
SF 1	2.51	1676.00	0.15	YES
SF 2	0.40	258.00	0.15	YES
SF 3	0.89	351.00	0.25	YES
SF 4	0.40	544.00	0.07	YES
SF 5	1.70	780.00	0.22	YES

Notes:
1. Calculation taken from Table 6.62a of the NCDENR ESC Manual for slopes < 2% only.

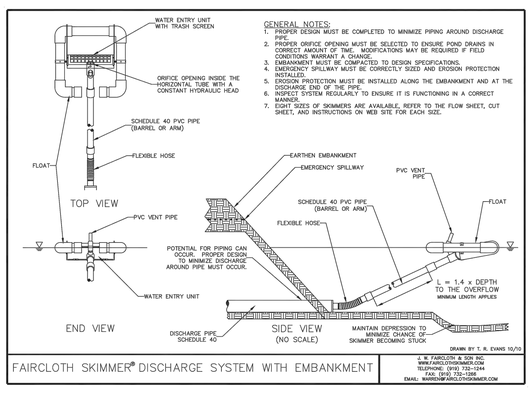

SKIMMER DETAIL WITH EMBANKMENT

NOT TO SCALE

NOTES:

ORIFICE SIZES ARE FOR THE FAIRCLOTH SKIMMER. IF ANOTHER TYPE OF SKIMMER IS USED THE DEVICE MUST BE ABLE TO DRAIN THE BASIN WITHIN 24 – 72 HOURS.

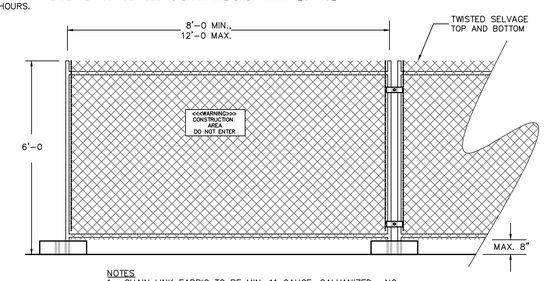

NOTES
1. CHAIN LINK FABRIC TO BE MIN. 11 GAUGE, GALVANIZED. NO RUSTED OR EXCESSIVELY MALFORMED FABRIC.
2. FENCE BASES SHALL BE OF SUFFICIENT WEIGHT and/or SPREAD TO ADEQUATELY SUPPORT EACH PANEL.
3. PANEL–TO–PANEL CONNECTIONS SHALL BE MADE AT A MIN. TWO LOCATIONS PER CONNECTION UNLESS OTHERWISE APPROVED.
4. PROVIDE CONSTRUCTION WARNING SIGNAGE 50'O.C. ALONG FENCING INSTALLATION.

TEMPORARY CONSTRUCTION FENCING

NOT TO SCALE

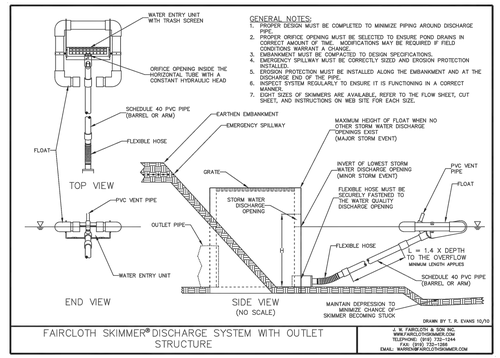

SKIMMER DETAIL WITH OUTLET STRUCTURE

NOT TO SCALE

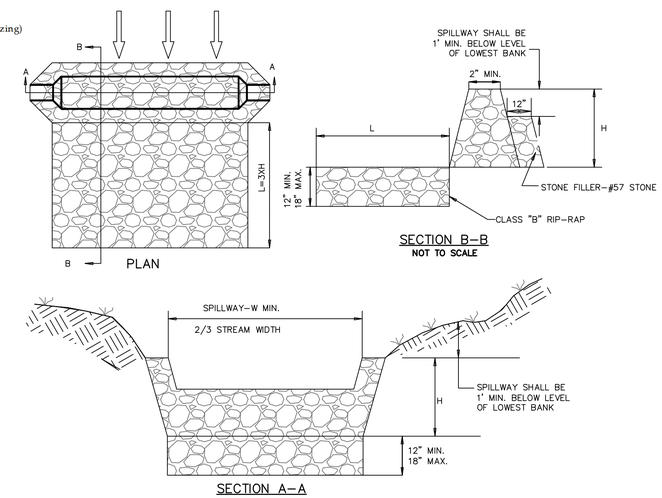

DITCH CHECK DAM

SD 13–04

NOT TO SCALE

REV.NO.	DESCRIPTIONS	DATE
E	CITY OF WILMINGTON TRC / STORMWATER / CFPUA RE–SUBMITTAL	01/22/2016
D	CITY OF WILMINGTON TRC RE–SUBMITTAL	11/12/2015
C	CITY OF WILMINGTON TRC / STORMWATER / TREE REMOVAL, NEW HANOVER COUNTY EROSION CONTROL AND CFPUA SUBMITTAL	09/16/2015
B	CITY OF WILMINGTON SRB MYLARS	07/27/2015
A	CITY OF WILMINGTON TRC CONCEPT SUBMITTAL	05/06/2015

REVISIONS

FINAL DRAWINGS - FOR REVIEW PURPOSES ONLY

SEAL

SEAL

McKIM&CREED
243 North Front Street
Wilmington, North Carolina 28401
Phone: (910)343–1048, Fax: (910)251–8282
License: F–1222
www.mckimcreed.com

NASH NORTH AMERICA SEKISUI HOUSE, LLC

RIVERLIGHTS™ by Newland COMMUNITIES

RIVERLIGHTS CONVENTIONAL NEIGHBORHOOD PHASE II

EROSION AND SEDIMENT CONTROL DETAILS

DATE:	05/06/2015
MCE PROJ. #	02735–0141
DRAWN	TCM/EEM
DESIGNED	KCBE
CHECKED	NJL
PROJ. MGR.	RMC

SCALE
HORIZONTAL: 1"=100'
VERTICAL: N/A

M&C FILE NUMBER CE–501
DRAWING NUMBER 22

STATUS: FINAL DESIGN
ISSUED FOR PERMITTING
REVISION E

SEEDBED PREPARATION:

1. CHISEL COMPACTED AREAS AND SPREAD TOPSOIL 3 INCHES DEEP OVER ADVERSE SOIL CONDITIONS, IF AVAILABLE.
2. RIP THE ENTRANCE AREA TO 6 INCHES DEPTH.
3. REMOVE ALL LOOSE ROCK, ROOTS, AND OTHER OBSTRUCTIONS LEAVING SURFACE REASONABLY SMOOTH AND UNIFORM.
4. APPLY AGRICULTURAL LIME, FERTILIZER, AND SUPERPHOSPHATE UNIFORMLY AND MIX WITH SOIL (SEE BELOW*).
5. CONTINUE TILLAGE UNTIL A WELL – PULVERIZED, FIRM, REASONABLY UNIFORM SEEDBED IS PREPARED 4 TO 6 INCHES DEEP.
6. SEED ON A FRESHLY PREPARED SEEDBED AND COVER SEED LIGHTLY WITH SEEDING EQUIPMENT OR CULTIPACK AFTER SEEDING.
7. MULCH IMMEDIATELY AFTER SEEDING AND ANCHOR MULCH.
8. INSPECT ALL SEEDED AREAS AND MAKE NECESSARY REPAIRS OR RESEEDINGS WITHIN THE PLANTING SEASON, IF POSSIBLE. IF STAND SHOULD BE OVER 60% DAMAGED, REESTABLISH FOLLOWING ORIGINAL LIME, FERTILIZER AND SEEDING RATES.
9. CONSULT CONSERVATION INSPECTOR ON MAINTENANCE TREATMENT AND FERTILIZATION AFTER PERMANENT COVER IS ESTABLISHED.
10. APPLY:
    AGRICULTURAL LIMESTONE – 2 TONS/ACRE
    FERTILIZER – 1000 LBS/ACRE (10–10–10)
    SUPERPHOSPHATE – 500 LBS/ACRE (20%)
    MULCH – 2 TONS/ACRE (SMALL GRAIN STRAW)
    ANCHOR – ASPHALT EMULSION AT 450 GAL/ACRE

TREE PROTECTION NOTES:

1. NO LAND DISTURBANCE INCLUDING TREE REMOVAL IS TO OCCUR OUTSIDE THE LIMITS OF DISTURBANCE SHOWN ON THE PLANS. [18–457(b)]
2. PROTECTIVE FENCING IS TO BE PROPERLY MAINTAINED THROUGHOUT THE DURATION OF THE PROJECT. [18–458]
3. LAND CLEARING AND CONSTRUCTION CONTRACTORS SHALL RECEIVE ADEQUATE INSTRUCTION ON TREE PROTECTION REQUIREMENTS AND METHODS. [18–457(d)]
4. ANY TREES AND/OR AREAS DESIGNATED TO BE PROTECTED MUST PROPERLY BARRICADED WITH FENCING AND PROTECTED THROUGHOUT CONSTRUCTION TO INSURE THAT NO CLEARING AND GRADING OR STAGING OF MATERIALS WILL OCCUR IN THOSE AREAS. [18–458]
5. NO EQUIPMENT IS ALLOWED ON THE SITE UNTIL ALL TREE PROTECTION FENCING AND SILT FENCING HAS BEEN INSTALLED AND APPROVED. [18–458]
6. REGULATED AND SIGNIFICANT TREES IN THE STREET YARD [18–456(c)] AND ANY TREES IN ANY REQUIRED BUFFERS [18–456(b)] ARE REQUIRED TO BE RETAINED.

TEMPORARY SEEDING			
GRASS TYPE	AMOUNT/ 1000 S.F.	TIME OF SEEDING	INITIAL
RYE GRAIN	1–2 LBS.	APRIL – JUNE	25 LBS. 10–10–10
BROWNTOP MILLET	1–2 LBS	JUNE – AUGUST	25 LBS 10–10–10

PERMANENT SEEDING			
GRASS TYPE	AMOUNT/ 1000 S.F.	TIME OF SEEDING	INITIAL
BERMUDA, COMMON	1–2 LBS.	APRIL – JUNE	25 LBS. 10–10–10
FESCUE, TALL (KENTUCKY 31)	5–7 LBS	JUNE – AUGUST FEB. – OCT.	25 LBS 10–10–10
SERICEA LESPEDEZA (SLOPES	1–2 LBS	MARCH – APRIL	25 LBS 10–10–10

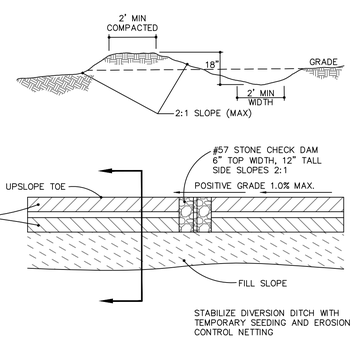

TEMPORARY DIVERSION DITCH

NOT TO SCALE

NOTE:
THE CRITICAL ROOT ZONE (CRZ) OF A TREE IS WHERE THE MAJORITY OF A TREE'S ROOTS LAY. 85% OF MOST TREE ROOTS ARE FOUND IN THE TOP 24" OF THE SOIL AND SUPPLY THE MAJORITY OF NUTRIENTS AND WATER. GENERALLY, ROOTS SPREAD OUT 2–3X THE HEIGHT OF THE TREE.

NOTE:
CROWN OF THE TREE IS NEEDED FOR LEAF GROWTH TO PRODUCE OXYGEN, FILTER THE AIR, REDUCE WIND AND SOFTEN NOISE. DO NOT DISFIGURE CROWN WITH INTENSIVE PRUNING.

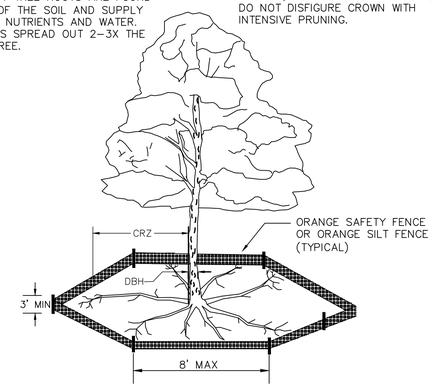

NOTES:
1. PROTECT CRITICAL ROOT ZONE (CRZ) OF TREES PRIOR TO CONSTRUCTION. CLEARLY MARK THE TREES AND ERECT A PROTECTIVE BARRIER AT THE CRZ. BARRIER SHALL BE MAINTAINED UNTIL CONSTRUCTION IS COMPLETE.
2. CRZ RADIUS IS 1 FT PER INCH OF TREE DIAMETER AT BREAST HEIGHT (DBH).
3. IF CONSTRUCTION OCCURS WITHIN THE CRZ, AT LEAST 12" OF MULCH AND/OR LOGGING MATTS SHALL BE PLACED WHERE MACHINERY MANEUVERS TO REDUCE SOIL COMPACTION IN THIS ZONE.
4. WHERE SIDEWALKS AND PATHWAYS PASS WITHIN CRZ, EXTRA CARE SHALL BE TAKEN TO AVOID DAMAGE TO THE ROOTS. ALTERNATE CONSTRUCTION METHODS, SUCH AS A REINFORCED SIDEWALK, SHALL BE IMPLEMENTED AS NECESSARY.
5. FOR ALL TREES, CUTTING OF LARGE STRUCTURAL ROOTS LOCATED NEAR THE BASE OF THE TRUNK IS PROHIBITED. DO NOT COMPACT SOIL BENEATH TREES. NO VEHICLE SHALL BE ALLOWED TO PARKUNDER TREES. NO MATERIALS OR EQUIPMENT SHALL BE STORED BENEATH TREES. DAMAGING THE BARK WITH LAWNMOWERS, CONSTRUCTION EQUIPMENT, OR ANYTHING ELSE IS PROHIBITED. CONTRACTOR SHALL REPAIR DAMAGE TO TREES.
6. FAILING TO INSTALL OR MAINTAIN PROTECTION MEASURES SHALL RESULT IN A STOP WORK ORDER AND FINE OF $500/DAY. DISTURBANCE OTHER THAN THAT ALLOWED ON THE APPROVED PLAN WILL REQUIRE OWNER TO POST A LETTER OF CREDIT FOR 3 YRS FOR TREE MITIGATION.

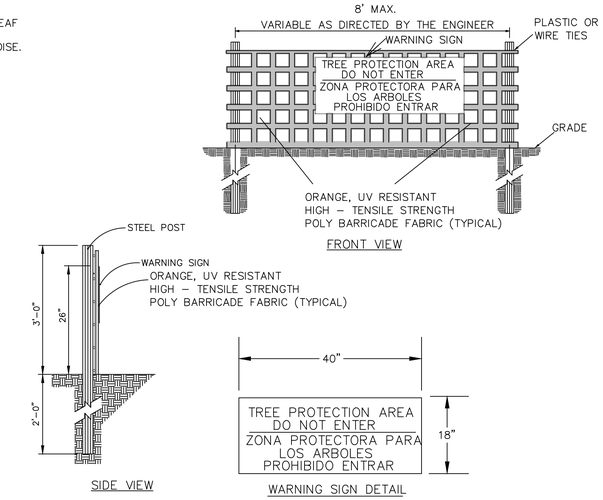

NOTES:
1. THE TREE PROTECTION FENCING SHALL NOT BE VIOLATED FOR THE ENTIRE DURATION OF THE PROJECT WITHOUT APPROVAL FROM URBAN FORESTRY STAFF.
2. WARNING SIGNS TO BE MADE OF DURABLE, WEATHERPROOF MATERIAL. LETTERS TO BE 3" HIGH, MINIMUM, CLEARLY LEGIBLE AND SPACED AS DETAILED.
3. SIGNS SHALL BE PLACED AT 50' MAXIMUM INTERVALS. PLACE A SIGN AT EACH END OF LINEAR TREE PROTECTION AND 50' ON CENTER THEREAFTER. FOR TREE PROTECTION AREAS LESS THAN 100' IN PERIMETER, PROVIDE NO LESS THAN TWO SIGNS PER PROTECTION AREA.
4. ATTACH SIGNS SECURELY TO FENCE POSTS AND FABRIC. MAINTAIN TREE PROTECTION FENCE AND SIGNS THROUGHOUT DURATION OF PROJECT.
5. TREE PROTECTION FENCING AND SIGNAGE SHALL BE REMOVED AFTER CONSTRUCTION.
6. ADDITIONAL SIGNS MAY BE REQUIRED BY CITY OF WILMINGTON, BASED ON ACTUAL FIELD CONDITIONS.

METHOD OF TREE PROTECTION DURING CONSTRUCTION

SD 15–09

NOT TO SCALE

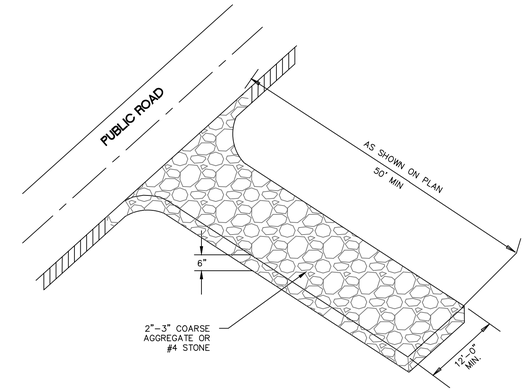

CONSTRUCTION ENTRANCE/EXIT

SD 13–03

NOT TO SCALE

TDD NUMBER	DA (AC)	Q 10 (CFS)	LENGTH (FT)	HIGH (FT)	LOW (FT)	ELEVATION DIFF. (FT)	SLOPE (%)	INITIAL LINING	MANNING n	VELOCITY (FPS)	COMMENT
TDD 1	3.58	7.8	255	8.93	6.28	2.65	1.04	BARE EARTH	0.020	3.69	LINING REQ

							TEMPORARY ROCK CHECK DAMS/WATTLES		
TDD NUMBER	SECONDARY LINING	MANNING n	VELOCITY (FPS)	COMMENT	DEPTH in	MIN. DEPTH in	CHECK DAM SPACING (FT)	NUMBER REQUIRED	NUMBER PROVIDED
TDD 1	EXCELSIOR	0.035	2.43	EXCELSIOR OK	10.6	18	192	1	1

Notes:
1. Q10 taken from Rational Method.
2. Manning n value for bare earth = 0.020 per NC ESC Manual Table 8.05f
3. Manning n value for excelsior (curled wood) matting = 0.035 per NC ESC Manual Table 8.05f
4. Tractive Force (Shear Stress) was also evaluated and found to be sufficient for the proposed lining.

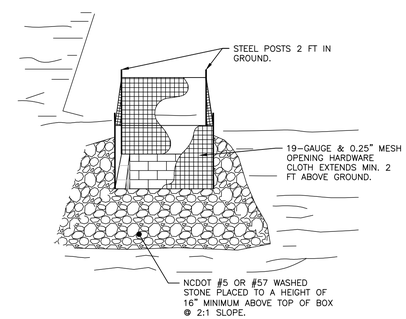

NOTES:
1. DRIVE 5–FOOT STEEL POSTS (1.25 lb/lf steel) 2 FEET INTO THE GROUND SURROUNDING THE INLET. SPACE POSTS EVENLY AROUND THE PERIMETER OF THE INLET, A MAXIMUM OF 4 FEET APART.
2. SURROUND THE POSTS WITH AT LEAST 19–GAUGE HARDWARE CLOTH WITH A 1/4–INCH MESH OPENING. SECURE THE WIRE MESH TO THE STEEL POSTS AT THE TOP, MIDDLE, AND BOTTOM FOR A MIN. 2 FEET ABOVE THE GROUND. PLACING A 2–FOOT FLAP OF THE WIRE MESH UNDER THE GRAVEL FOR ANCHORING AND REMOVAL IS RECOMMENDED.
3. UNIFORMLY GRADE A SHALLOW DEPRESSION APPROACHING THE INLET. THE TOP ELEVATION OF THE STRUCTURE MUST BE AT LEAST 12–INCHES LOWER THAN THE SURROUNDING GROUND ELEVATION DOWNSLOPE FROM THE INLET TO ENSURE THAT STORM FLOWS GET INTO THE INTENDED INLET; UNLESS OTHER SEDIMENT–CONTROL DEVICES ARE INSTALLED TO PREVENT OFF–SITE SEDIMENT–RUNOFF.

TEMP. STORM DRAIN INLET PROTECTION

NOT TO SCALE

REV.NO.	DESCRIPTIONS	DATE
E	CITY OF WILMINGTON TRC / STORMWATER / CFPUA RE–SUBMITTAL	01/22/2016
D	CITY OF WILMINGTON TRC RE–SUBMITTAL	11/12/2015
C	CITY OF WILMINGTON TRC / STORMWATER / TREE REMOVAL, NEW HANOVER COUNTY EROSION CONTROL AND CFPUA SUBMITTAL	09/16/2015
B	CITY OF WILMINGTON SRB MYLARS	07/27/2015
A	CITY OF WILMINGTON TRC CONCEPT SUBMITTAL	05/06/2015

REVISIONS

SEAL

FINAL DRAWINGS - FOR REVIEW PURPOSES ONLY

SEAL

McKIM&CREED
243 North Front Street
Wilmington, North Carolina 28401
Phone: (910)343–1048, Fax: (910)251–8282
License: F–1222
www.mckimcreed.com

NASH North America Sekisui House, LLC

RIVERLIGHTS™ by Newland COMMUNITIES

RIVERLIGHTS CONVENTIONAL NEIGHBORHOOD PHASE II

EROSION AND SEDIMENT CONTROL DETAILS

DATE:	05/06/2015
MCE PROJ. #	02735–0141
DRAWN	TCM/EEM
DESIGNED	KCBE
CHECKED	NJL
PROJ. MGR.	RMC

SCALE
HORIZONTAL: 1"=100'
VERTICAL: N/A

M&C FILE NUMBER CE–502
DRAWING NUMBER 23

STATUS: FINAL DESIGN
ISSUED FOR PERMITTING
REVISION E

840.02 — English Standard Drawing for Concrete Catch Basin, 12" thru 54" Pipe (Sheet 1 of 2)

STATE OF NORTH CAROLINA
DEPT. OF TRANSPORTATION
DIVISION OF HIGHWAYS
RALEIGH, N.C.

1-12

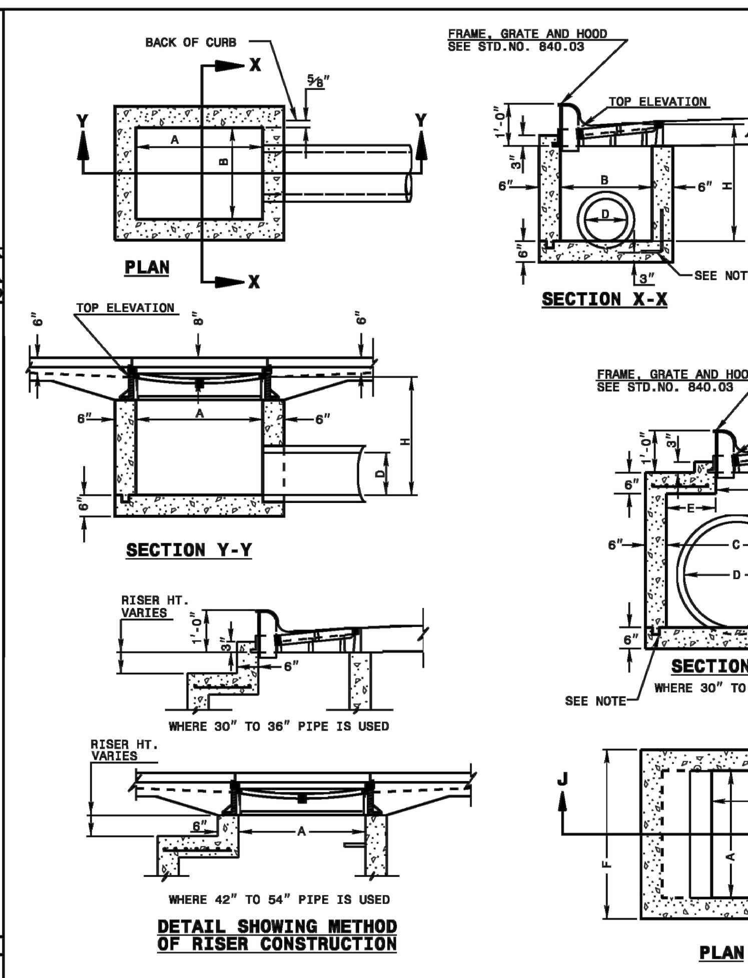

GENERAL NOTES:

USE CLASS "B" CONCRETE THROUGHOUT.

PROVIDE ALL CATCH BASINS OVER 3'-6" IN DEPTH WITH STEPS 12" ON CENTER. USE STEPS WHICH COMPLY WITH STD. DRAWING 840.66.

OPTIONAL CONSTRUCTION - MONOLITHIC POUR, 2" KEYWAY, OR #4 BAR DOWELS AT 12" CENTERS AS DIRECTED BY THE ENGINEER.

USE FORMS FOR THE CONSTRUCTION OF THE BOTTOM SLAB.

IF REINFORCED CONCRETE PIPE IS SET IN BOTTOM SLAB OF BOX, ADD TO SLAB AS SHOWN ON STD. NO. 840.00.

USE TYPE "E", "F" AND "G" GRATES UNLESS OTHERWISE INDICATED.

FOR 8'-0" IN HEIGHT OR LESS USE 6" WALLS AND BOTTOM SLAB. OVER 8'-0" TO 16'-0" IN HEIGHT USE 8" WALLS AND BOTTOM SLAB. ADJUST QUANTITIES ACCORDINGLY.

CONSTRUCT WITH PIPE CROWNS MATCHING.

CHAMFER ALL EXPOSED CORNERS 1".

DRAWING NOT TO SCALE.

SHEET 1 OF 2 — 840.02

840.02 — English Standard Drawing for Concrete Catch Basin, 12" thru 54" Pipe (Sheet 2 of 2)

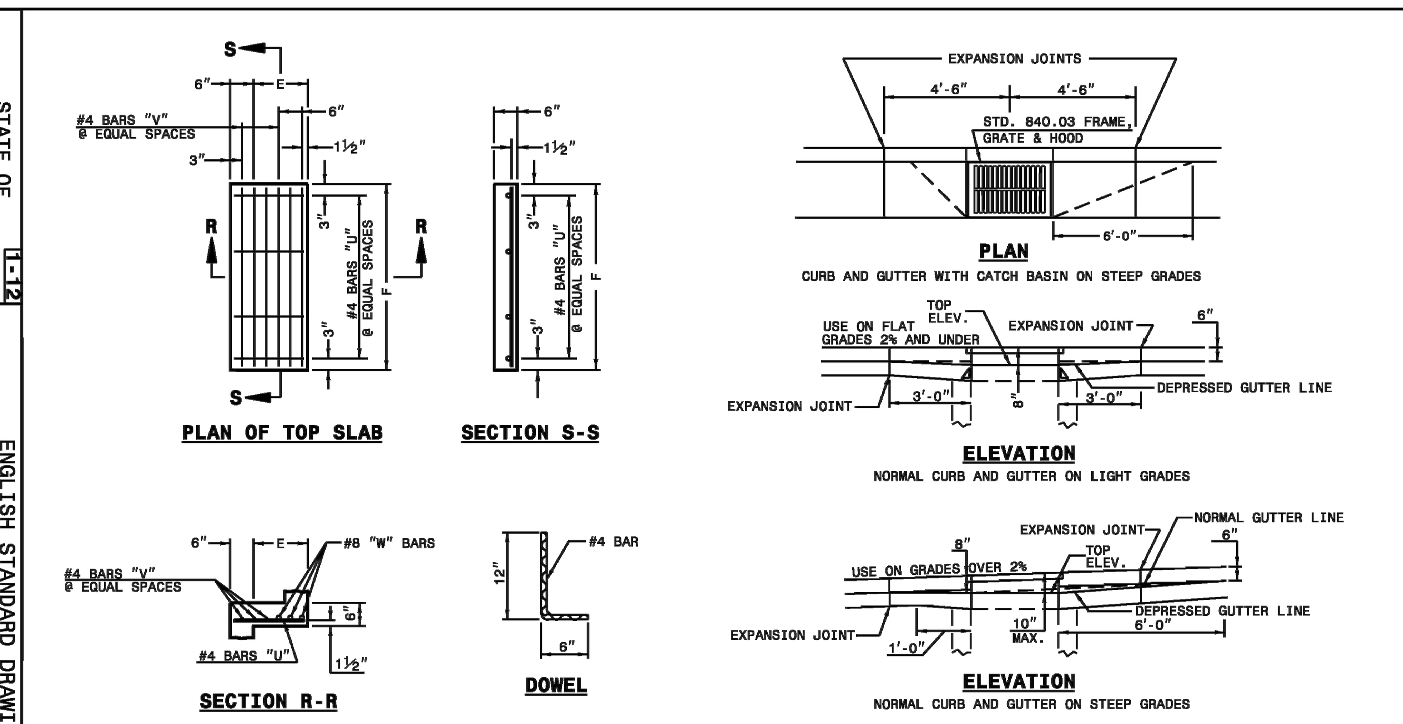

MINIMUM DIMENSIONS AND QUANTITIES FOR CONCRETE CATCH BASIN (BASED ON MIN. HEIGHT, H, WITH NO RISER) *

PIPE D	SPAN A	WIDTH B	WIDTH C	SPAN G	MIN. HEIGHT H	COVER DIMENSION E	COVER DIMENSION F	BARS-U NO.	BARS-U LENGTH	BARS-V NO.	BARS-V LENGTH	BARS-W NO.	BARS-W LENGTH	TOTAL LBS.	CU.YDS. CONC. IN BOX TOP SLAB	BOTTOM SLAB	TOT. CONC. FOR MINIMUM HEIGHT, H	DEDUCTIONS ONE PIPE C.M.	R.C.
12"	3'-0"	2'-2"	--	--	2'-9"	--	--	--	--	--	--	--	--	--	--	0.235	0.772	0.015	0.026
15"	3'-0"	2'-2"			3'-0"											0.235	0.829	0.023	0.036
18"	3'-0"	2'-2"			3'-3"											0.235	0.887	0.033	0.049
24"	3'-0"	2'-2"			3'-9"											0.235	1.001	0.059	0.085
30"	3'-0"	2'-2"	3'-4"		4'-3"	1'-2"	4'-0"	4	1'-5"	2	3'-9"	3	3'-9"	39	0.123	0.321	1.433	0.092	0.127
36"	3'-0"	2'-2"	3'-10"		4'-9"	1'-8"	4'-0"	4	1'-11"	3	3'-9"	3	3'-9"	43	0.161	0.358	1.714	0.132	0.178
42"	3'-0"	2'-2"		4'-5"	5'-3"	1'-5"	3'-2"	4	1'-8"	2	2'-11"	3	2'-11"	32	0.112	0.318	1.738	0.180	0.243
48"	3'-0"	2'-2"		5'-0"	5'-9"	2'-0"	3'-2"	4	2'-3"	3	2'-11"	3	2'-11"	35	0.145	0.352	2.052	0.235	0.317
54"	3'-0"	2'-2"		5'-7"	6'-3"	2'-7"	3'-2"	4	2'-10"	5	2'-11"	3	2'-11"	41	0.180	0.386	2.387	0.297	0.401

* RISER HAS .228 CUBIC YARDS OF CONCRETE PER FOOT HEIGHT

SHEET 2 OF 2 — 840.02

840.46 — English Standard Drawing for Traffic Bearing Precast Drainage Structure (Sheet 1 of 1)

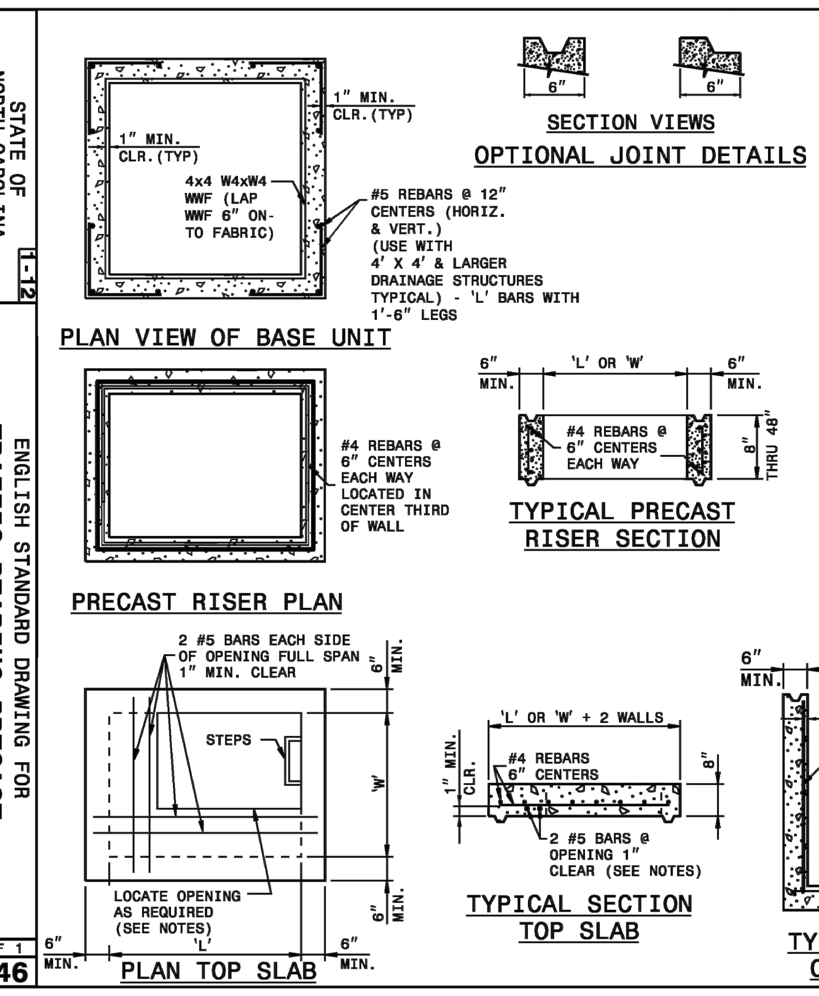

GENERAL NOTES:

- THIS PRECAST BOX MAY BE USED FOR THE FOLLOWING STANDARDS: 840.04, 840.05, 840.14, 840.15, 840.31, 840.32, 840.34, 840.35, 840.36 AND 840.41.
- INSTALL AND PAY FOR PRECAST DRAINAGE STRUCTURES IN ACCORDANCE WITH NCDOT STANDARD SPECIFICATION SECTION 840.
- USE 4000 PSI MINIMUM COMPRESSIVE STRENGTH CONCRETE.
- USE ASTM A615 GRADE 60 REINFORCING STEEL. USE ASTM A185 WELDED WIRE FABRIC (WWF).
- LIMIT MAXIMUM DEPTH TO TOP OF BOTTOM SLAB TO 15'-0".
- PLACE LIFT HOLES OR PINS IN ACCORDANCE WITH OSHA STANDARD 1926.704.
- ORIENT STRUCTURES SO THAT CORNERS WILL NOT BE CUT OR MODIFIED UNLESS ALLOWED BY DETAIL IN PLANS.
- PRECAST ALL ELEMENTS TO MEET ASTM C913.
- FRAME AND GRATE HEIGHT MAY BE ADJUSTED WITH CONCRETE OR BRICK IN ACCORDANCE WITH STANDARD 840.25.
- PROVIDE PRECAST STRUCTURES OVER 4'-0" IN DEPTH WITH STEPS 12" ON CENTERS IN ACCORDANCE WITH STD. NO. 840.66.
- WELDED WIRE FABRIC MAY BE SUBSTITUTED FOR REBAR IF THE SAME MIN. AREA OF STEEL IS PROVIDED.
- SEAL JOINTS WITH AN APPROVED SEALANT (SEE SECTION 840 OF NCDOT STANDARD SPECIFICATIONS.
- LIMIT MAXIMUM STRUCTURE SIZE INSIDE CLEAR DIMENSIONS TO 6'-0" X 6'-0".
- THE OUTSIDE PIPE DIAMETER PLUS 2" IS THE MINIMUM STRUCTURE SIZE OR THE OPENING REQUIRED FOR GRATE AND FRAME WHICHEVER IS GREATER.
- ROUND MANHOLE MAY BE USED IN LIEU OF SQUARE PROVIDED 2 EXTRA #5'S ARE PLACED ON EVERY SIDE NOT ADJACENT TO A WALL. SEE STD. DWG. 840.34 FOR MANHOLE INSTALLATION.

SHEET 1 OF 1 — 840.46

840.03 — English Standard Drawing for Frame, Grates, and Hood for Use on Standard Catch Basin (Sheet 1 of 2)

NOTE: USE TYPE "E", "F" AND "G" GRATE UNLESS OTHERWISE NOTED.

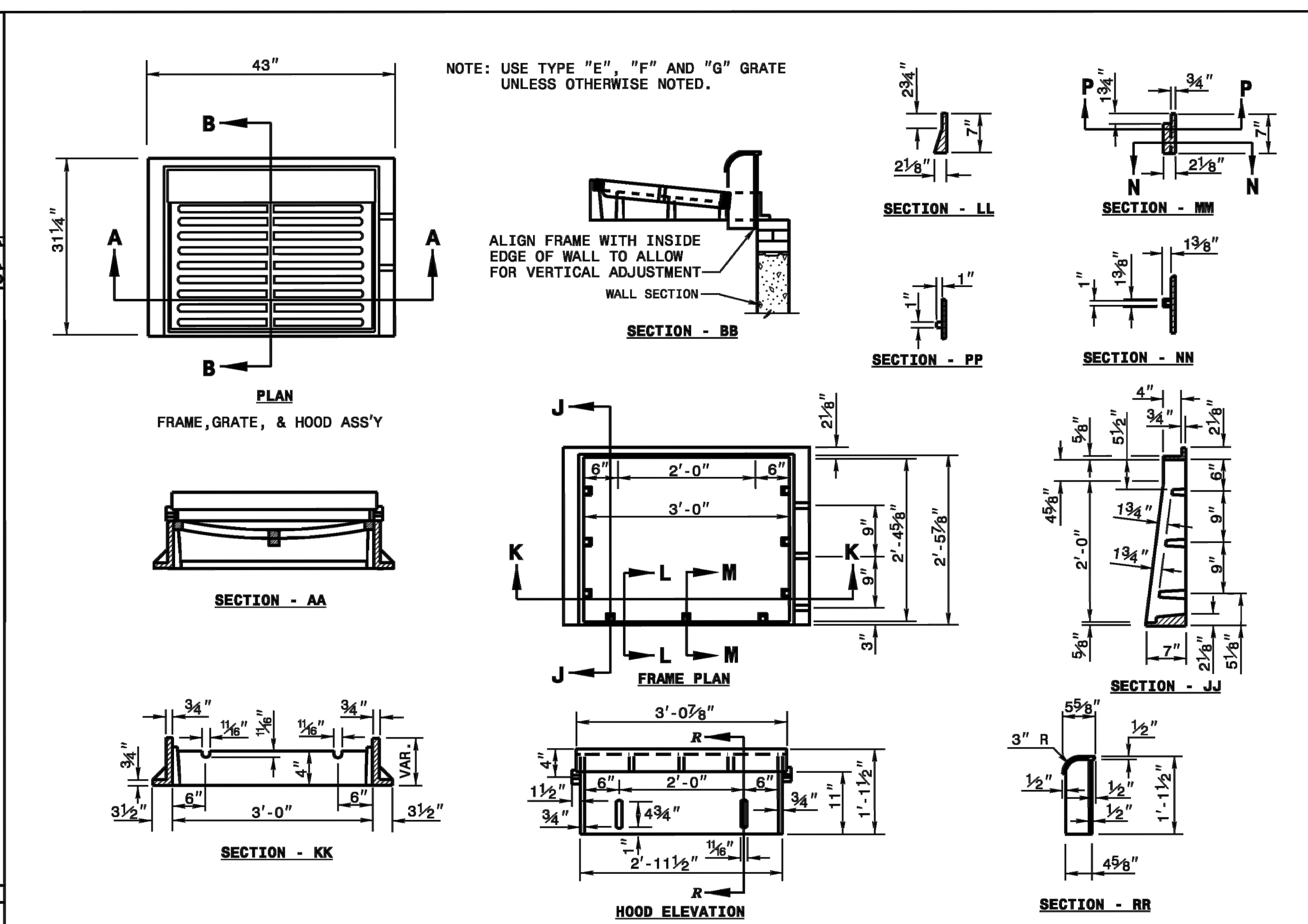

SHEET 1 OF 2 — 840.03

840.03 — English Standard Drawing for Frame, Grates, and Hood for Use on Standard Catch Basin (Sheet 2 of 2)

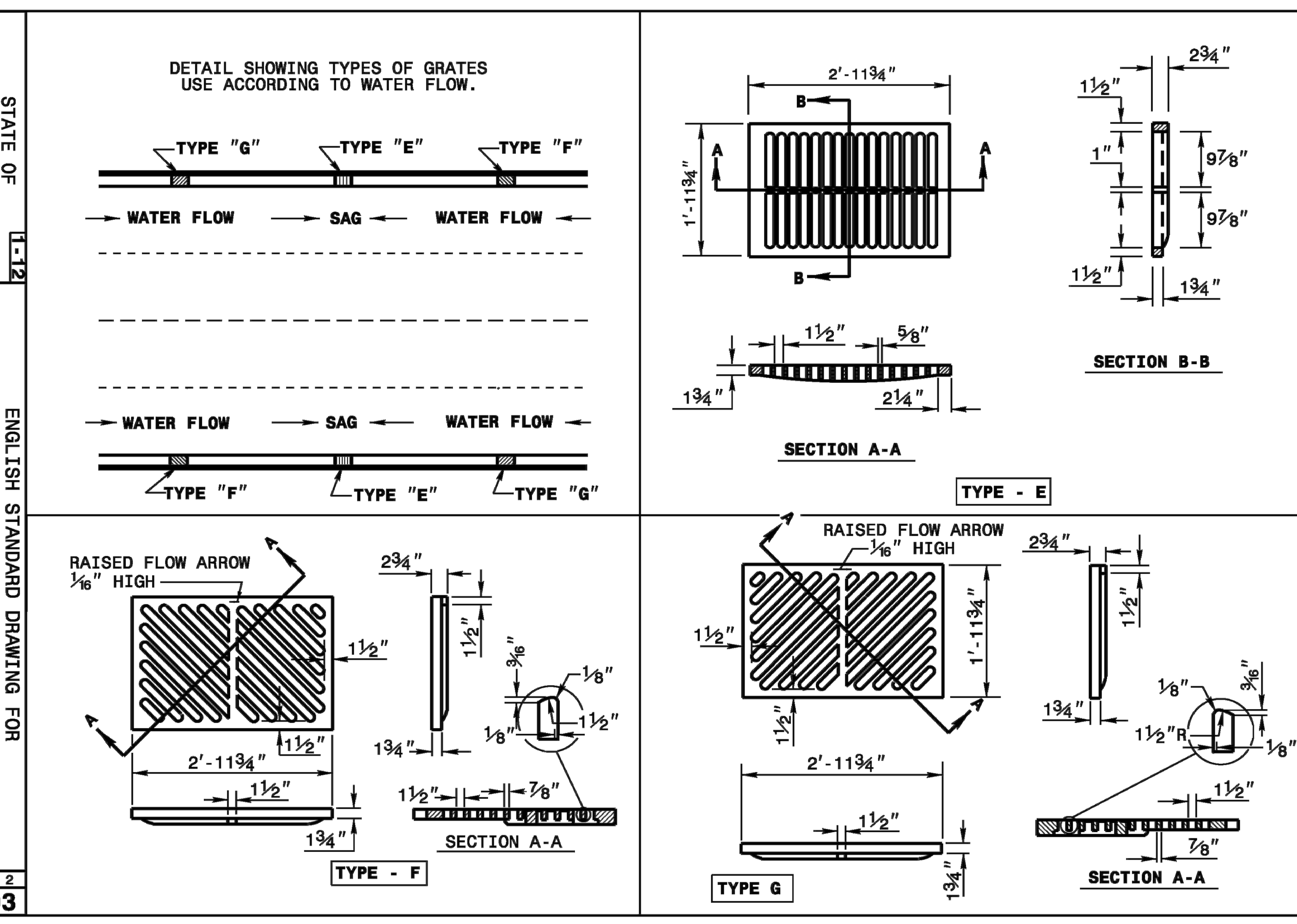

SHEET 2 OF 2 — 840.03

840.14 — English Standard Drawing for Concrete Drop Inlet, 12" thru 30" Pipe (Sheet 1 of 1)

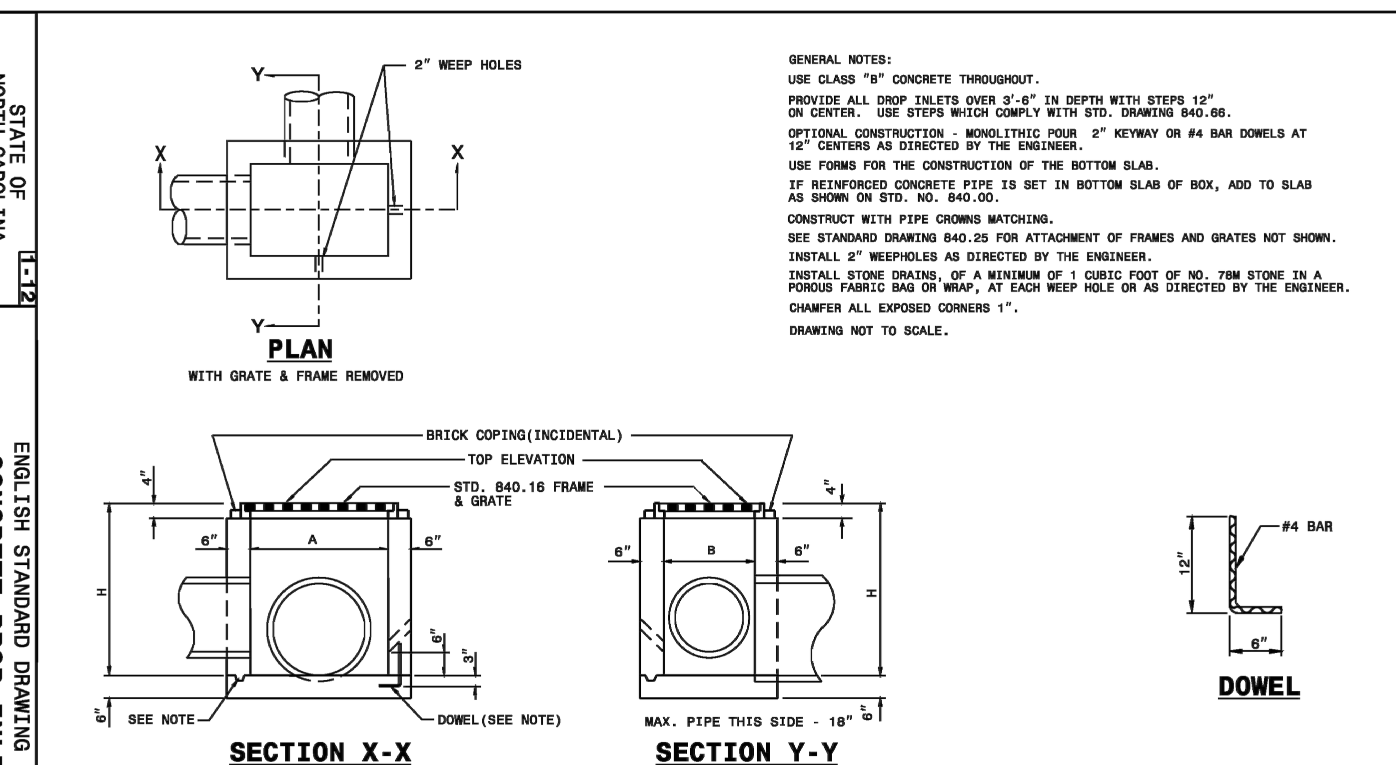

GENERAL NOTES:

USE CLASS "B" CONCRETE THROUGHOUT.

PROVIDE ALL DROP INLETS OVER 3'-6" IN DEPTH WITH STEPS 12" ON CENTER. USE STEPS WHICH COMPLY WITH STD. DRAWING 840.66.

OPTIONAL CONSTRUCTION - MONOLITHIC POUR 2" KEYWAY OR #4 BAR DOWELS AT 12" CENTERS AS DIRECTED BY THE ENGINEER.

USE FORMS FOR THE CONSTRUCTION OF THE BOTTOM SLAB.

IF REINFORCED CONCRETE PIPE IS SET IN BOTTOM SLAB OF BOX, ADD TO SLAB AS SHOWN ON STD. NO. 840.00.

CONSTRUCT WITH PIPE CROWNS MATCHING.

SEE STANDARD DRAWING 840.25 FOR ATTACHMENT OF FRAMES AND GRATES NOT SHOWN.

INSTALL 2" WEEPHOLES AS DIRECTED BY THE ENGINEER.

INSTALL STONE DRAINS, OF A MINIMUM OF 1 CUBIC FOOT OF NO. 78M STONE IN A POROUS FABRIC BAG OR WRAP, AT EACH WEEP HOLE OR AS DIRECTED BY THE ENGINEER.

CHAMFER ALL EXPOSED CORNERS 1".

DRAWING NOT TO SCALE.

DIMENSIONS AND QUANTITIES FOR DROP INLET (BASED ON MIN. HEIGHT, H)

PIPE D	SPAN A	WIDTH B	MIN. HEIGHT H	CUBIC YARDS CONC. IN BOX BOTTOM SLAB	WALL PER FT. HT.	TOTAL CONCRETE FOR MINIMUM HEIGHT, H	DEDUCTIONS FOR ONE PIPE C.M.	R.C.
12"	3'-0"	2'-0"	2'-0"	0.222	0.222	0.592	0.015	0.026
15"			2'-3"			0.648	0.023	0.036
18"			2'-6"			0.703	0.033	0.049
24"			3'-0"			0.814	0.059	0.085
30"	3'-0"	2'-0"	3'-6"	0.222	0.222	0.925	0.092	0.127

SHEET 1 OF 1 — 840.14

840.16 — English Standard Drawing for Drop Inlet Frame and Grates for Use with Std. Dwg.s 840.14 and 840.15 (Sheet 1 of 1)

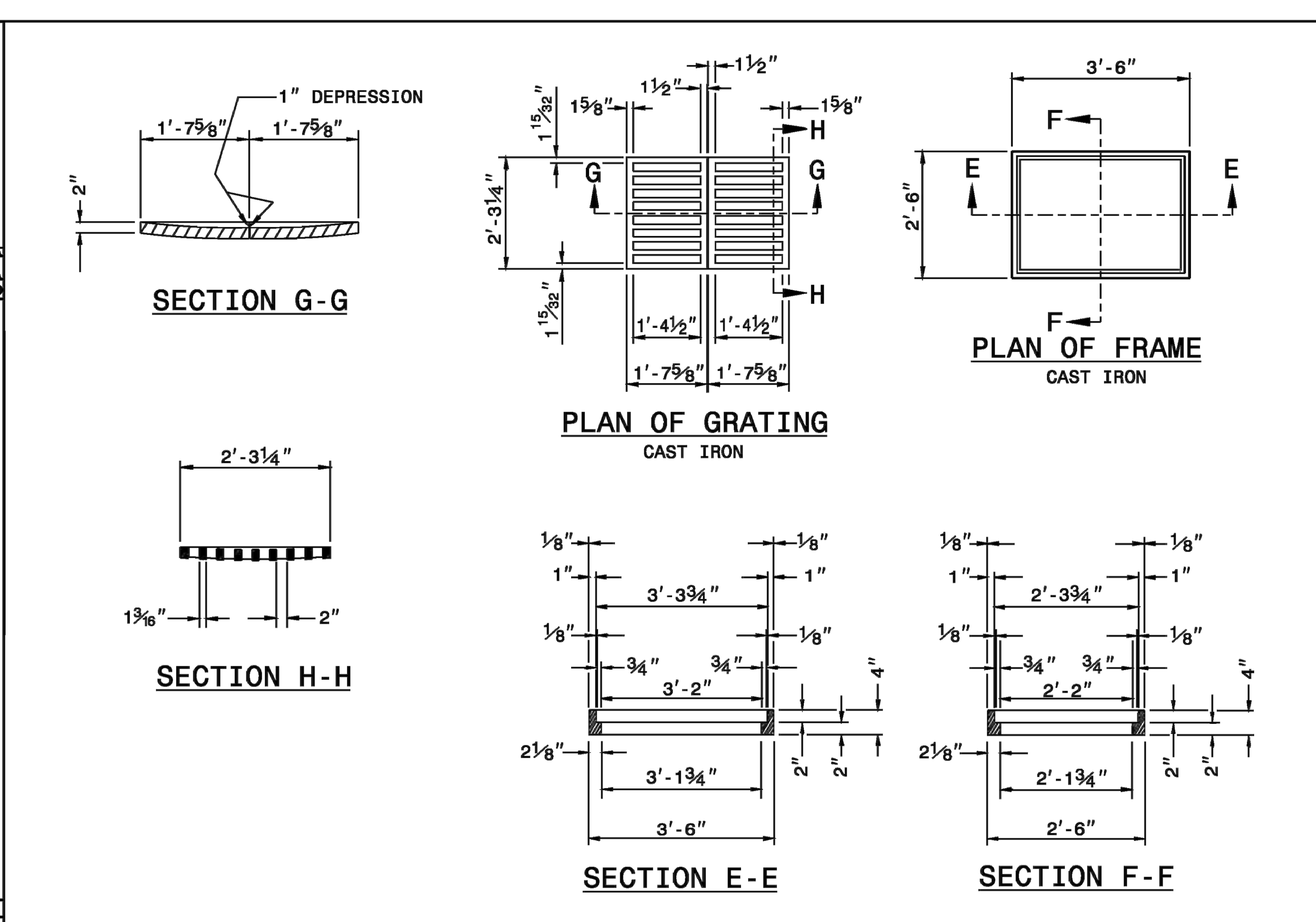

SHEET 1 OF 1 — 840.16

840.25 — English Standard Drawing for Anchorage for Frames, Brick/Concrete/Precast Concrete (Sheet 1 of 1)

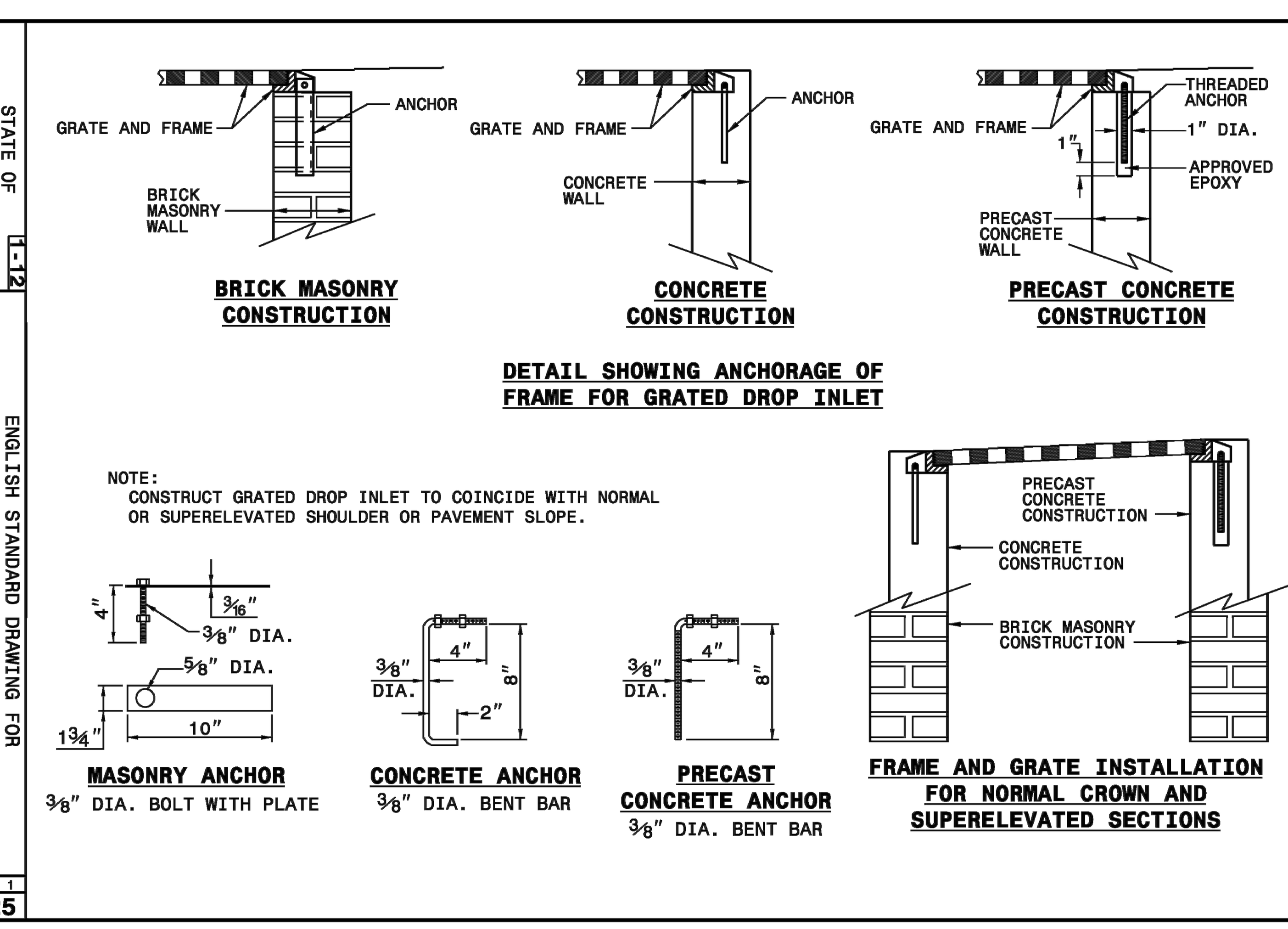

NOTE:
CONSTRUCT GRATED DROP INLET TO COINCIDE WITH NORMAL OR SUPERELEVATED SHOULDER OR PAVEMENT SLOPE.

SHEET 1 OF 1 — 840.25

840.66 — English Standard Drawing for Drainage Structure Steps (Sheet 1 of 1)

NOTES:
INSTALL ALL STEPS PROTRUDING 4" FROM INSIDE FACE OF STRUCTURE WALL.
STEPS DIFFERING IN DIMENSIONS, CONFIGURATION, OR MATERIALS FROM THOSE SHOWN MAY ALSO BE USED PROVIDED THE CONTRACTOR HAS FURNISHED THE ENGINEER WITH DETAILS OF THE PROPOSED STEPS AND HAS RECEIVED WRITTEN APPROVAL FROM THE ENGINEER FOR THE USE OF SUCH STEPS.

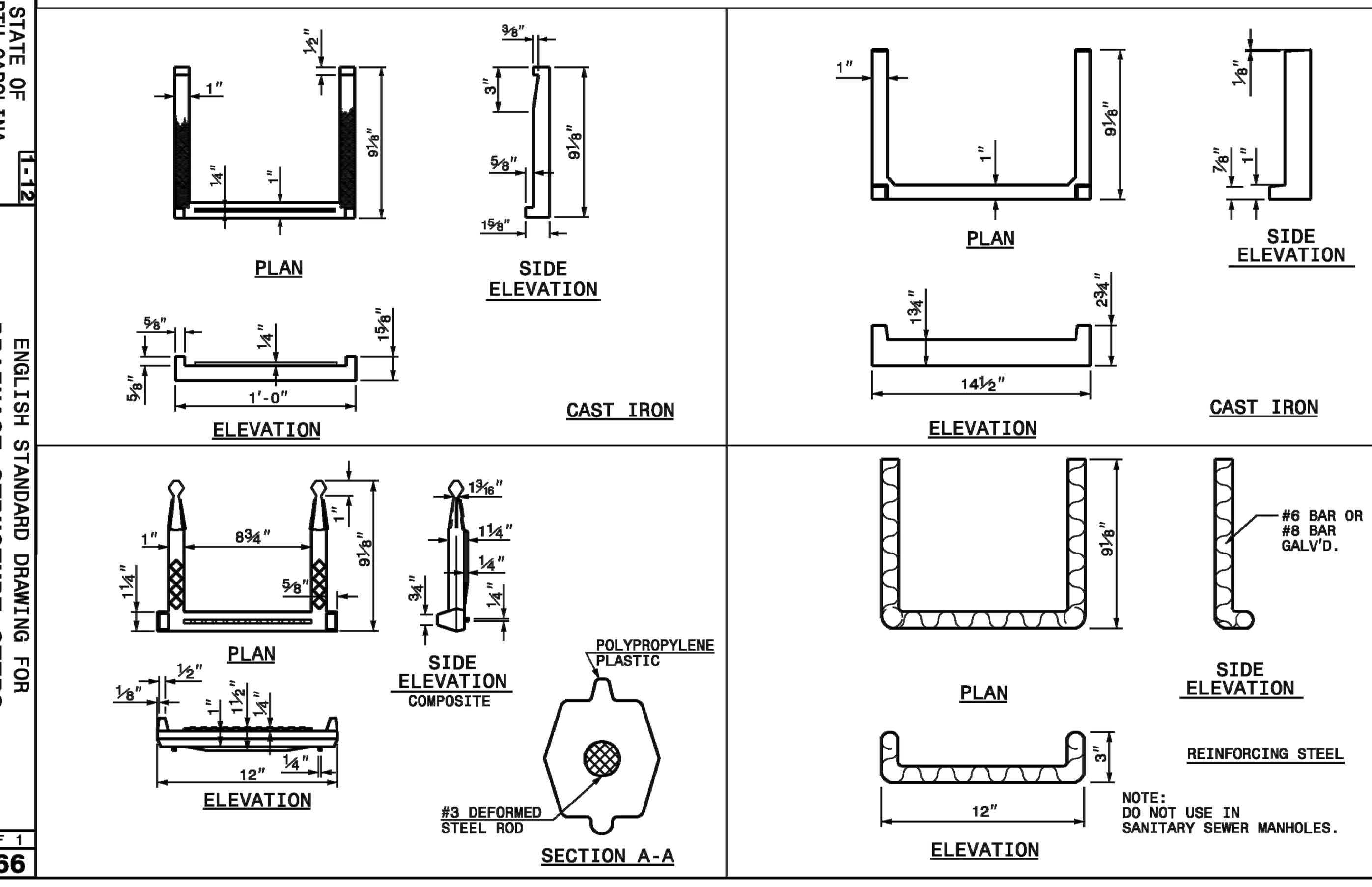

SHEET 1 OF 1 — 840.66

REV.NO.	DESCRIPTIONS	DATE
E	CITY OF WILMINGTON TRC / STORMWATER / CFPUA RE-SUBMITTAL	01/22/2016
D	CITY OF WILMINGTON TRC RE-SUBMITTAL	11/12/2015
C	CITY OF WILMINGTON TRC / STORMWATER / TREE REMOVAL, NEW HANOVER COUNTY EROSION CONTROL AND CFPUA SUBMITTAL	09/16/2015
B	CITY OF WILMINGTON SRB MYLARS	07/27/2015
A	CITY OF WILMINGTON TRC CONCEPT SUBMITTAL	05/06/2015

REVISIONS

SEAL

FINAL DRAWINGS - FOR REVIEW PURPOSES ONLY

SEAL

McKIM&CREED
243 North Front Street
Wilmington, North Carolina 28401
Phone: (910)343-1048, Fax: (910)251-8282
License: F-1222
www.mckimcreed.com

NORTH AMERICA SEKISUI HOUSE, LLC

RIVERLIGHTS™ by Newland COMMUNITIES

RIVERLIGHTS CONVENTIONAL NEIGHBORHOOD PHASE II

STORM DRAINAGE DETAILS

DATE:	05/06/2015
MCE PROJ. #	02735-0141
DRAWN	TCM/EEM
DESIGNED	KCBE
CHECKED	NJL
PROJ. MGR.	RMC

SCALE
HORIZONTAL: 1"=100'
VERTICAL: N/A

M&C FILE NUMBER: CG-501
DRAWING NUMBER: 24

STATUS: FINAL DESIGN
ISSUED FOR PERMITTING
REVISION: E

STATE OF NORTH CAROLINA DEPT. OF TRANSPORTATION DIVISION OF HIGHWAYS RALEIGH, N.C.

1-12

ENGLISH STANDARD DRAWING FOR **TRAFFIC BEARING GRATED DROP INLET** FOR CAST IRON DOUBLE FRAME AND GRATES

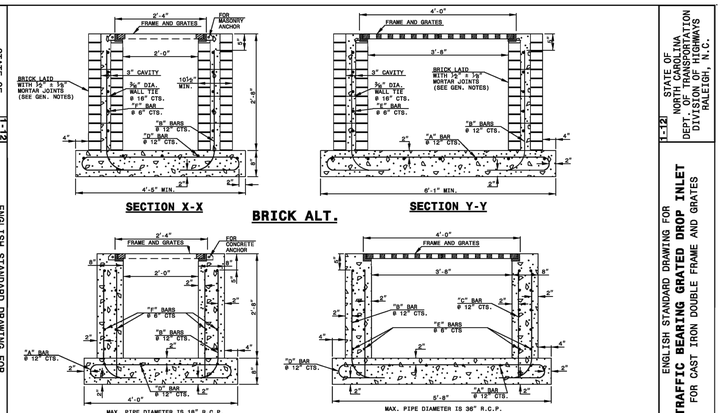

NOTES:
- HORIZONTAL AND VERTICAL DIMENSIONS MAY BE ADJUSTED AS THE FIELD CONDITIONS AND/OR ALTERNATE DESIGN REQUIRE.
- MAXIMUM HEIGHT FOR THIS STRUCTURE IS 14'-0".
- MAKE ALL ADJUSTMENTS AS DIRECTED BY THE ENGINEER.
- DEPTH OF STEEL GRATE WILL REQUIRE DEEPER SEAT ALONG SHORT WALLS.

SHEET 1 OF 2
840.35

STATE OF NORTH CAROLINA DEPT. OF TRANSPORTATION DIVISION OF HIGHWAYS RALEIGH, N.C.

1-12

ENGLISH STANDARD DRAWING FOR **TRAFFIC BEARING GRATED DROP INLET** FOR CAST IRON DOUBLE FRAME AND GRATES

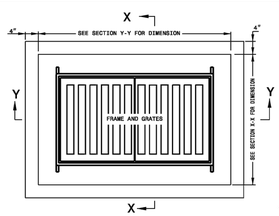

PLAN

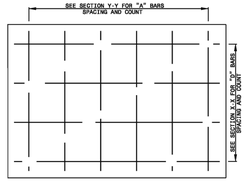

PLAN OF BASE

BILL OF MATERIALS

	COMMON CONCRETE ALT.				BRICK ALT.		
BAR	SIZE	LENGTH	QUANTITY	WEIGHT	LENGTH	QUANTITY	WEIGHT
A	#5	6'-4½"	6	39.9	7'-7½"	6	47.7
B	#5	3'-4½"	16	56.3	3'-4½"	16	56.3
C	#5	3'-8"	14	38.9	-0-	-0-	-0-
D	#5	6'-0½"	4	33.6	9'-3½"	4	38.8
E	#5	3'-0"	20	62.6	3'-0"	10	31.3
F	#5	4'-8"	20	97.3	4'-8"	10	48.7
RETNF. STEEL (TOTAL WEIGHT LBS.)				328.6			222.8
CONCRETE IN BASE CLASS "AA" (CUBIC YARDS)				0.56			0.56
CONCRETE IN WALLS CLASS "A" (CUBIC YARDS)				0.92			0.92
CONCRETE IN WALLS CLASS "B" (CUBIC YARDS)				-0-			0.38
BRICK IN WALLS (CUBIC YARDS)				-0-			0.91
CONCRETE (TOTAL CUBIC YARDS)				1.48			1.02
BRICK & CONCRETE (TOTAL CUBIC YARDS)				1.48			1.93
CONC. CUBIC YARDS IN WALL/FOOT OF HEIGHT				0.28			0.14
BRICK CUBIC YARDS IN WALL/FOOT OF HEIGHT				-0-			0.34
LBS. OF REINF. STEEL IN WALL/FOOT OF HEIGHT				94.9			47.6

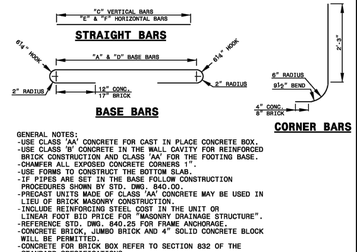

GENERAL NOTES:
- USE CLASS 'AA' CONCRETE FOR CAST IN PLACE CONCRETE BOX.
- USE CLASS 'B' CONCRETE IN THE WALL CAVITY FOR REINFORCED BRICK CONSTRUCTION AND CLASS 'AA' FOR THE FOOTING BASE.
- CHAMFER ALL EXPOSED CONCRETE CORNERS 1".
- USE FORMS TO CONSTRUCT THE BOTTOM SLAB.
- IF PIPES ARE SET IN THE BASE FOLLOW CONSTRUCTION PROCEDURES SHOWN BY STD. DWG. 840.00.
- PRECAST UNITS MADE OF CLASS 'AA' CONCRETE MAY BE USED IN LIEU OF BRICK MASONRY CONSTRUCTION.
- INCLUDE REINFORCING STEEL COST IN THE UNIT OR LINEAR FOOT BID PRICE FOR "MASONRY DRAINAGE STRUCTURE".
- REFERENCE STD. DWG. 840.25 FOR FRAME ANCHORAGE.
- CONCRETE BRICK, JUMBO BRICK AND 4" SOLID CONCRETE BLOCK WILL BE PERMITTED.
- CONCRETE FOR BRICK BOX REFER TO SECTION 832 OF THE STANDARD SPECIFICATIONS.
- PROVIDE GRATED DROP INLETS OVER 3'-6" DEEP WITH STEPS SPACED 12" ON CENTER AS DIRECTED BY STD. DWG. 840.66.
- FRAME AND GRATES ARE SEPARATE CONTRACT ITEMS.

SHEET 2 OF 2
840.35

STATE OF NORTH CAROLINA DEPT. OF TRANSPORTATION DIVISION OF HIGHWAYS RALEIGH, N.C.

1-12

ENGLISH STANDARD DRAWING FOR **FRAMES AND WIDE SLOT SAG GRATES**

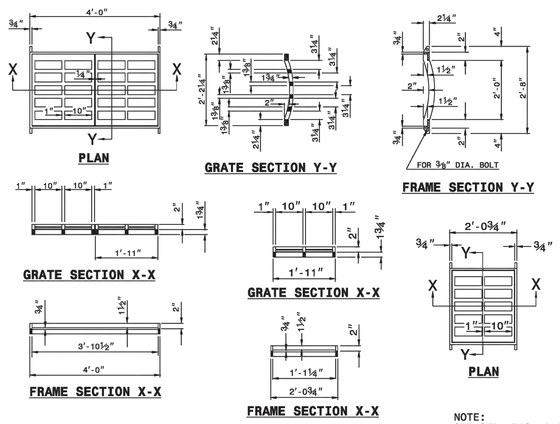

NOTE:
SEE STD. DWG. 840.25 FOR FRAME ANCHORAGE.

SHEET 1 OF 1
840.22

STORM DRAINAGE NOTES:

1. ALL PIPE BEDDING SHALL BE CLASS "C" UNLESS OTHERWISE DIRECTED BY THE ENGINEER.
2. ALL STORM DRAINAGE PIPES SHALL BE RCP CLASS III UNLESS OTHERWISE NOTED ON THE PLANS.
3. DO NOT PLANT TREES WITHIN UTILITY AND DRAINAGE EASEMENTS.
4. THE ENGINEER AND THE CONTRACTOR SHALL INSPECT ALL EXISTING PIPES USED IN THE FINAL DRAINAGE SYSTEM AND AGREE ON THE CONDITION OF THE PIPES PRIOR TO CONSTRUCTION. IF DAMAGE OCCURS TO THESE PIPES DURING CONSTRUCTION, THE CONTRACTOR SHALL BE RESPONSIBLE FOR THE REPAIR OR REPLACEMENT OF THE PIPE(S).
5. THE CONTRACTOR SHALL CONTACT ONECALL BEFORE COMMENCING ANY WORK. THE CONTRACTOR SHALL VERIFY THE LOCATION OF ALL UNDERGROUND UTILITIES WHETHER INDICATED ON THE DRAWINGS OR NOT. THE CONTRACTOR WILL ASSURE THE PRESENCE ONSITE OF A REPRESENTATIVE OF THE GAS COMPANY WHEN WORKING IN THE VICINITY OF ANY GAS MAINS.

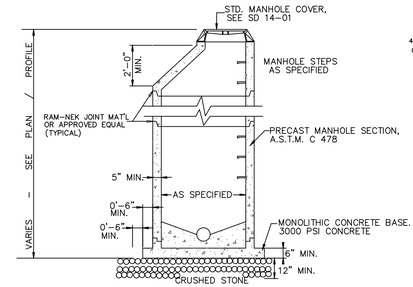

NOTE:
EXTENDED BASE MAY NOT BE REQUIRED WHERE MANHOLES ARE GREATER THAN 4 FEET INSIDE DIAMETER

PRECAST MANHOLE
SD 14-11
NOT TO SCALE

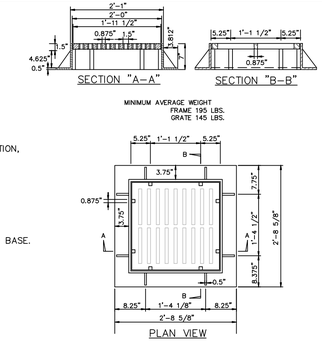

GRILL BASIN CASTINGS
SD 14-04
NOT TO SCALE

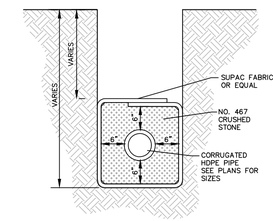

TYPICAL SECTION

GUIDELINES FOR SUB-DRAIN
SD 2-04
NOT TO SCALE

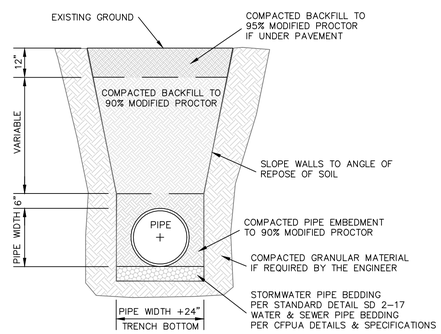

STANDARD PIPE TRENCH DETAIL
SD 1-07
NOT TO SCALE

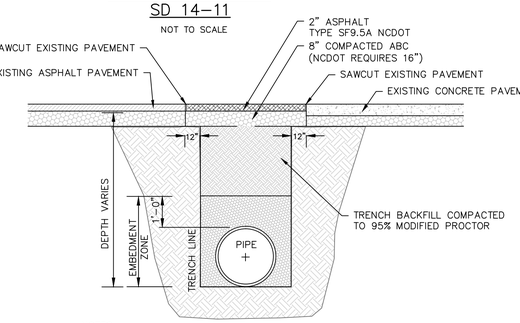

NOTES:
- BACKFILL TO BE INSTALLED IN 6" LIFTS (MAXIMUM) AND COMPACTED TO A MINIMUM DENSITY OF 95% AS DETERMINED BY THE MODIFIED A.A.S.H.T.O. STANDARD METHOD T-99
- CUT – BACK TO BE PREPARED AFTER TRENCH BACKFILLING AND COMPACTION

STANDARD SHOWING METHOD MAKING PAVEMENT REPAIRS WHERE PIPE IS INSTALLED

PAVEMENT REPAIR DETAIL
SD 1-16
NOT TO SCALE

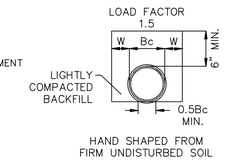

FIG. 1
CLASS – C
SHAPED BOTTOM

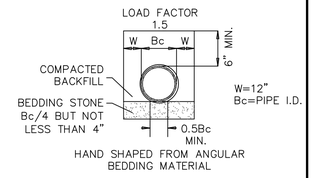

FIG. 2
CLASS – C
SHAPED BOTTOM

GUIDELINES FOR BEDDING DETAILS, STORM SEWER CLASS C
SD 2-17
NOT TO SCALE

- EXCAVATION FOR STORM DRAINAGE PIPE SHALL BE TO THE LINES AND GRADES AS SHOWN ON THE PLANS.
- THE BEDDING SHALL BE SHAPED IN ACCORDANCE WITH CLASS "C" BEDDING AS SHOWN ON CITY STANDARD DETAIL SD 2-17.
- THE BEDDING SHALL PROVIDE A FIRM FOUNDATION OF UNIFORM DENSITY ALONG THE ENTIRE LENGTH OF PIPE. RECESSES SHALL BE MADE TO ACCOMMODATE BELLS AND JOINTS.
- WHERE UNSTABLE SOILS ARE ENCOUNTERED AS DETERMINED BY GEOTECHNICAL ENGINEER, A MINIMUM 4-INCH THICK BEDDING OF STONE SHALL BE PLACED, SEE FIGURE 2, SD 2-17.
- THE STONE SHALL BE UNIFORMLY GRADED FROM 3/4 INCH TO NO. 4 IN ACCORDANCE WITH ASTM C-33. CARE SHALL BE TAKEN TO PREVENT UNDERCUTTING IN SUITABLE SOIL.
- AREAS UNDERCUT SHALL BE FILLED WITH SUITABLE SOIL AND COMPACTED TO 95% OF MAXIMUM DENSITY AT OPTIMUM MOISTURE CONTENT AS DETERMINED BY ASTM D 1557 STANDARD TEST METHOD.

ACF GRASS CELL

PANEL SIZE: 23.6" X 19.7" X 2"

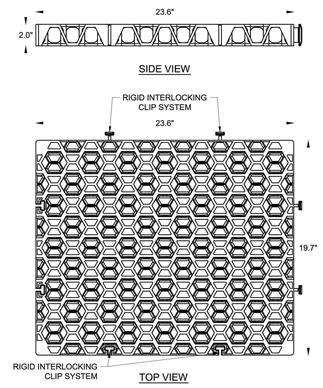

SPECIFICATIONS

WIDTH	19.7"
LENGTH	23.6"
HEIGHT	2.0"
AREA PER UNIT	3.23 SF
UNIT WEIGHT	1.24 LBS/SF
SURFACE OPEN AREA	>90%
INTERNAL VOID AREA	>95%
BASE MATERIAL	100% RECYCLED POLYPROPYLENE
BIOLOGICAL & CHEMICAL RESISTANCE	UNAFFECTED BY MOLD, ALGAE, SOIL BORN CHEMICALS, BACTERIA, AND BITUMEN
SERVICE TEMPERATURE	-14 TO 185 °F
COMPRESSIVE STRENGTH (UNFILLED)	320.02 PSI
COMPRESSIVE STRENGTH (FILLED)	6,351.70 PSI

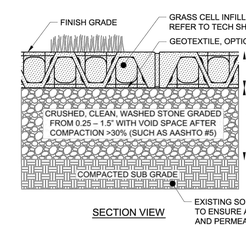

SECTION VIEW

ACF GRASS CELL

FOR ADDITIONAL INFORMATION PLEASE CONTACT: ACF ENVIRONMENTAL, 1-800-448-3636, www.acfenvironmental.com

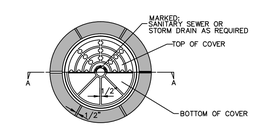

NOTE:
RING & COVER CONTACT SURFACES SHALL BE MACHINED SO AS TO INSURE EVEN BEARING OF COVER ON RING

MINIMUM WEIGHTS:
RING 190 LBS.
COVER 120 LBS.

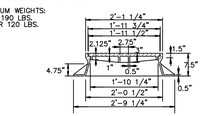

STANDARD MANHOLE RING AND COVER
SD 14-01
NOT TO SCALE

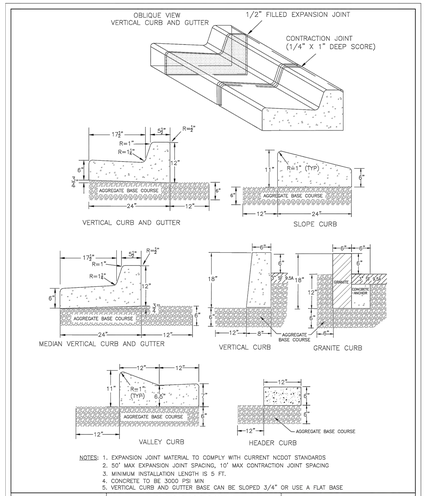

NOTES:
1. EXPANSION JOINT MATERIAL TO COMPLY WITH CURRENT NCDOT STANDARDS
2. 50' MAX EXPANSION JOINT SPACING, 10' MAX CONTRACTION JOINT SPACING
3. MINIMUM INSTALLATION LENGTH IS 5 FT.
4. CONCRETE TO BE 3000 PSI MIN.
5. VERTICAL CURB AND GUTTER BASE CAN BE SLOPED 3/4" OR USE A FLAT BASE

STANDARD DETAIL

CURBING

CITY OF WILMINGTON ENGINEERING
PO BOX 1810
WILMINGTON N.C. 28402
(910) 341-7857

SD 3-11

DATE: AUGUST, 2011
DRAWN: PB/JSR
CHECKED: DEC
SCALE: NOT TO SCALE

REV.NO.	DESCRIPTIONS	DATE
E	CITY OF WILMINGTON TRC / STORMWATER / CFPUA RE-SUBMITTAL	01/22/2016
D	CITY OF WILMINGTON TRC RE-SUBMITTAL	11/12/2015
C	CITY OF WILMINGTON TRC / STORMWATER / TREE REMOVAL, NEW HANOVER COUNTY EROSION CONTROL AND CFPUA SUBMITTAL	09/16/2015
B	CITY OF WILMINGTON SRB MYLARS	07/27/2015
A	CITY OF WILMINGTON TRC CONCEPT SUBMITTAL	05/06/2015

REVISIONS

FINAL DRAWINGS - FOR REVIEW PURPOSES ONLY

SEAL

SEAL

McKIM&CREED
243 North Front Street
Wilmington, North Carolina 28401
Phone: (910)343-1048, Fax: (910)251-8282
License: F-1222
www.mckimcreed.com

NASH — NORTH AMERICA SEKISUI HOUSE, LLC

RIVERLIGHTS™ by Newland COMMUNITIES

RIVERLIGHTS CONVENTIONAL NEIGHBORHOOD PHASE II

STORM DRAINAGE DETAILS

DATE:	05/06/2015
MCE PROJ. #	02735-0141
DRAWN	TCM/EEM
DESIGNED	KCBE
CHECKED	NJL
PROJ. MGR.	RMC

SCALE
HORIZONTAL: 1"=100'
VERTICAL: N/A

M&C FILE NUMBER CG-502
DRAWING NUMBER 25

STATUS: FINAL DESIGN
ISSUED FOR PERMITTING
REVISION E

S:\2735\0141 Ph 2 SF\80-Drawings\DETAILS_02735\0141.dwg, 1/22/2016 9:42:15 AM, EMcArthur

Structure Table

Structure Name	Details
CB-1-62	RIM = 18.141 INV OUT = 15.070
CB-1-63	RIM = 18.141 INV IN = 14.860 INV OUT = 14.860
CB-1-64	RIM = 17.124 INV OUT = 13.600
CB-1-65	RIM = 17.124 INV IN = 13.490 INV IN = 13.490 INV OUT = 13.490
CB-1-66	RIM = 17.520 INV OUT = 14.110
CB-1-67	RIM = 17.520 INV IN = 14.000 INV IN = 14.000 INV OUT = 14.000
CB-1-78	RIM = 18.083 INV IN = 14.280 INV IN = 14.280 INV OUT = 14.280
CB-1-79	RIM = 18.020 INV OUT = 14.500
DI-1-60	RIM = 19.088 INV IN = 12.510 INV OUT = 12.510
DI-1-68A	RIM = 19.000 INV IN = 14.250 INV OUT = 14.250
DI-1-68B	RIM = 20.812 INV IN = 14.200 INV OUT = 14.200
DI-1-69A	RIM = 21.026
DI-1-69B	RIM = 19.213 INV IN = 15.500 INV OUT = 15.500
DI-1-70A	RIM = 19.177 INV IN = 15.600 INV OUT = 15.600
DI-1-70B	RIM = 19.176 INV IN = 15.560 INV OUT = 15.653
DI-1-70C	RIM = 19.317 INV IN = 15.915 INV OUT = 15.915
DI-1-71A	RIM = 19.734 INV OUT = 16.250
DI-1-71B	RIM = 19.697 INV IN = 16.230 INV OUT = 16.230
DI-1-73	RIM = 21.726 INV OUT = 18.200
DI-1-74	RIM = 19.838 INV IN = 17.100 INV OUT = 17.100

Structure Table

Structure Name	Details
CB-9-1	RIM = 19.902 INV IN = 12.960 INV OUT = 12.850
CB-9-2	RIM = 19.902 INV IN = 12.960 INV OUT = 12.850
CB-9-3	RIM = 20.457
CB-9-4	RIM = 21.196 INV OUT = 17.500
CB-9-5	RIM = 21.196 INV IN = 17.250 INV IN = 17.250 INV OUT = 17.250
CB-9-6	RIM = 21.901 INV OUT = 18.250
CB-9-7	RIM = 21.901 INV IN = 18.000 INV IN = 18.000 INV OUT = 18.000
CB-9-8	RIM = 22.728 INV OUT = 19.250
CB-9-9	RIM = 22.728 INV IN = 19.000 INV OUT = 19.000
CB-9-10	RIM = 20.457 INV IN = 16.000 INV IN = 13.460 INV OUT = 13.460
CB-9-11	RIM = 20.892 INV OUT = 13.850
CB-9-12	RIM = 20.864 INV IN = 13.740 INV IN = 13.740 INV OUT = 13.740
CB-9-13	RIM = 22.041 INV IN = 14.220 INV IN = 18.000 INV OUT = 14.216
CB-9-14	RIM = 22.041 INV OUT = 18.250
CB-9-20	RIM = 22.821 INV IN = 19.420 INV OUT = 19.420
CB-9-21	RIM = 22.812 INV OUT = 19.528
CB-9-22	RIM = 21.582 INV IN = 14.740 INV IN = 17.896 INV OUT = 14.738
CB-9-23	RIM = 21.584 INV OUT = 18.000
CB-9-24	RIM = 19.927 INV IN = 16.350 INV IN = 15.530 INV OUT = 15.527
CB-9-25	RIM = 19.925 INV OUT = 16.500

Structure Table

Structure Name	Details
CB-9-27	RIM = 19.758 INV OUT = 15.765
CB-9-29	RIM = 19.922 INV OUT = 16.250
CB-9-30	RIM = 19.922 INV IN = 16.140 INV IN = 16.140 INV OUT = 16.141
CB-9-31	RIM = 20.335 INV OUT = 16.630
CB-9-32	RIM = 20.306 INV IN = 16.520 INV IN = 16.520 INV OUT = 16.517
CB-9-33	RIM = 20.657 INV IN = 17.443 INV OUT = 17.440
CB-9-34	RIM = 21.592 INV OUT = 18.350
CB-9-35	RIM = 21.592 INV IN = 18.244 INV OUT = 18.240
CB-9-36	RIM = 19.844 INV IN = 16.115 INV OUT = 16.115
CB-9-37	RIM = 20.413 INV OUT = 16.756
CB-9-38	RIM = 20.418 INV IN = 16.650 INV OUT = 16.655
DI-9-16	RIM = 22.348 INV IN = 15.907 INV OUT = 15.910
DI-9-17	RIM = 23.223 INV IN = 16.500 INV OUT = 16.500
DI-9-18	RIM = 24.358 INV IN = 17.350 INV OUT = 17.350
DI-9-26	RIM = 19.771 INV IN = 15.660 INV IN = 15.910 INV IN = 15.840 INV OUT = 15.660
I-9	RIM = 16.611 INV IN = 12.694 INV OUT = 12.690 INV OUT = 12.690
MH-9-15	RIM = 22.215 INV IN = 15.818 INV IN = 14.310 INV OUT = 14.309
MH-9-19	RIM = 24.848 INV IN = 18.650 INV OUT = 17.550
MH-9-39	RIM = 20.741 INV IN = 16.441 INV IN = 13.610 INV OUT = 13.610
NS-9-1	RIM = 14.399 INV IN = 12.595 INV OUT = 12.590

Structure Table

Structure Name	Details
CB-10-1	RIM = 14.298 INV IN = 7.670 INV OUT = 7.675
CB-10-2	RIM = 14.298 INV IN = 7.780 INV OUT = 7.777 INV OUT = 11.500
CB-10-3	RIM = 14.624 INV IN = 8.090 INV OUT = 8.090
CB-10-4	RIM = 14.981 INV OUT = 11.500
CB-10-5	RIM = 14.964 INV IN = 11.393 INV IN = 8.400 INV OUT = 8.400
CB-10-6	RIM = 15.414 INV OUT = 11.500
CB-10-7	RIM = 15.392 INV IN = 11.390 INV IN = 8.800 INV OUT = 8.800
CB-10-8	RIM = 16.068 INV OUT = 12.750
CB-10-9	RIM = 16.023 INV IN = 12.640 INV IN = 9.300 INV OUT = 9.300
CB-10-11	RIM = 17.737 INV OUT = 14.250
CB-10-13	RIM = 18.543 INV OUT = 15.237
CB-10-14	RIM = 18.543 INV IN = 15.130 INV OUT = 15.134
CB-10-16	RIM = 19.418 INV IN = 15.387 INV OUT = 15.390
CB-10-17	RIM = 18.927 INV OUT = 15.860
CB-10-18	RIM = 18.927 INV IN = 15.750 INV OUT = 15.750
CB-10-19	RIM = 18.169 INV OUT = 10.840
CB-10-20	RIM = 18.168 INV IN = 10.730 INV IN = 9.970 INV OUT = 9.970
CB-10-21	RIM = 17.713 INV IN = 14.000 INV IN = 12.500 INV OUT = 12.500
CB-10-22	RIM = 20.407 INV OUT = 16.500
CB-10-23	RIM = 20.407 INV IN = 16.390 INV IN = 10.570 INV OUT = 10.570

Structure Table

Structure Name	Details
CB-10-24	RIM = 20.168 INV OUT = 16.500
CB-10-25	RIM = 20.170 INV IN = 16.390 INV IN = 11.520 INV OUT = 11.520
CB-10-26	RIM = 19.371 INV OUT = 16.500
CB-10-29	RIM = 19.787 INV OUT = 16.500
CB-10-30	RIM = 19.786 INV IN = 16.390 INV IN = 12.840 INV OUT = 12.844
CB-10-31	RIM = 20.440 INV OUT = 13.600
CB-10-32	RIM = 20.382 INV IN = 13.700 INV OUT = 13.700
CB-10-33	RIM = 20.382 INV IN = 13.820 INV OUT = 13.820
CB-10-34	RIM = 19.902 INV OUT = 16.400
CB-10-35	RIM = 19.902 INV IN = 16.290 INV IN = 14.510 INV OUT = 14.510
CB-10-36	RIM = 19.563 INV OUT = 16.250
CB-10-37	RIM = 19.563 INV IN = 16.140 INV IN = 15.000 INV OUT = 15.000
CB-10-38	RIM = 19.194 INV OUT = 16.000
CB-10-39	RIM = 19.194 INV IN = 15.600 INV IN = 15.880 INV OUT = 15.600
CB-10-40	RIM = 18.804 INV IN = 15.700 INV OUT = 15.698
CB-10-41	RIM = 19.205 INV OUT = 15.806
DI-10-42	RIM = 19.398 INV IN = 16.390 INV IN = 12.260 INV OUT = 12.260
I-10	RIM = 9.833 INV IN = 7.500
MH-10-10	RIM = 17.752 INV IN = 9.860 INV IN = 12.240 INV OUT = 9.860
MH-10-15	RIM = 19.374 INV IN = 14.890 INV IN = 14.890 INV OUT = 14.890

Structure Table

Structure Name	Details
MH-10-30A	RIM = 20.453 INV IN = 13.480 INV IN = 13.480 INV OUT = 13.480
O-10	RIM = 8.501 INV IN = 6.980
OUT P10	RIM = 12.668 INV OUT = 7.500
Structure - (353)	RIM = -6.066 INV IN = 8.000

Structure Table

Structure Name	Details
CB-11-2	RIM = 11.075 INV OUT = 7.500
CB-11-3	RIM = 11.106 INV IN = 7.400 INV OUT = 7.400
CB-11-4	RIM = 15.229 INV OUT = 11.310
CB-11-5	RIM = 15.229 INV IN = 11.000 INV OUT = 11.000
I-11	RIM = 8.521 INV IN = 7.000
MH-11-6	RIM = 11.679 INV IN = 8.500 INV IN = 7.320 INV OUT = 7.320
O-11	RIM = 9.271 INV IN = 7.750

REV.NO.	DESCRIPTIONS	DATE
E	CITY OF WILMINGTON TRC / STORMWATER / CFPUA RE-SUBMITTAL	01/22/2016
D	CITY OF WILMINGTON TRC RE-SUBMITTAL	11/12/2015
C	CITY OF WILMINGTON TRC / STORMWATER / TREE REMOVAL, NEW HANOVER COUNTY EROSION CONTROL AND CFPUA SUBMITTAL	09/16/2015
B	CITY OF WILMINGTON SRB MYLARS	07/27/2015
A	CITY OF WILMINGTON TRC CONCEPT SUBMITTAL	05/06/2015

REVISIONS

SEAL

FINAL DRAWINGS - FOR REVIEW PURPOSES ONLY

SEAL

McKIM&CREED
243 North Front Street
Wilmington, North Carolina 28401
Phone: (910)343-1048, Fax: (910)251-8282
License: F-1222
www.mckimcreed.com

NASH North America Sekisui House, LLC

RIVERLIGHTS™ by Newland COMMUNITIES

RIVERLIGHTS CONVENTIONAL NEIGHBORHOOD PHASE II

STORM DRAINAGE DETAILS

DATE:	05/06/2015
MCE PROJ. #	02735-0141
DRAWN	TCM/EEM
DESIGNED	KCBE
CHECKED	NJL
PROJ. MGR.	RMC

SCALE
HORIZONTAL: 1"=100'
VERTICAL: N/A

M&C FILE NUMBER CG-503
DRAWING NUMBER 26

STATUS: FINAL DESIGN
ISSUED FOR PERMITTING
REVISION E

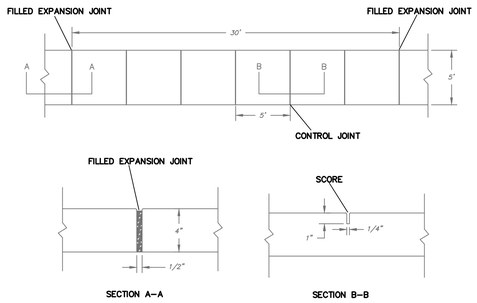

NOTES:

1. JOINT MATERIAL TO COMPLY WITH CURRENT NCDOT STANDARDS.
2. SANITARY SEWER CLEAN-OUTS, WATER METERS, MANHOLES, AND VALVE LIDS TO BE LOCATED OUTSIDE SIDEWALK WHERE FEASIBLE.
3. MINIMUM SIDEWALK WIDTH TO BE 6' MINIMUM IF PLACED AT BACK OF CURB.
4. CONCRETE FOR ALL SIDEWALKS (EXCEPT ANY PORTION CONTAIN WITHIN A DRIVEWAY APRON) SHALL BE CLASS "A" – 3,000 PSI.
5. MINIMUM REPLACEMENT FOR REPAIRS IS A 5' X 5' PANEL
6. 4" STONE BASE MAY BE REQUIRED FOR POOR SOIL CONDITIONS
7. MINIMUM DEPTH FOR TUNNELING BELOW SIDEWALK IS 12"
8. MAX ADJACENT GROUND SLOPE WITHOUT RAILING IS 2:1
9. MIN GRADE FOR PROPER DRAINAGE IS 1% IN AT LEAST 1 DIRECTION. MAX CROSS SLOPE IS 2% MAX LONGITUDINAL SLOPE IS 8.3%, 10% IF LIMITED BY EXISTING CONDITIONS, OR NO GREATER THAN THE SLOPE OF THE EXISTING ADJACENT ROAD.

DATE: OCTOBER, 2010	STANDARD DETAIL	CITY OF WILMINGTON NORTH CAROLINA
DRAWN: PB/JSR	SIDEWALK	PO BOX 1810
CHECKED BY DEC		
SCALE NOT TO SCALE		SD 3-10

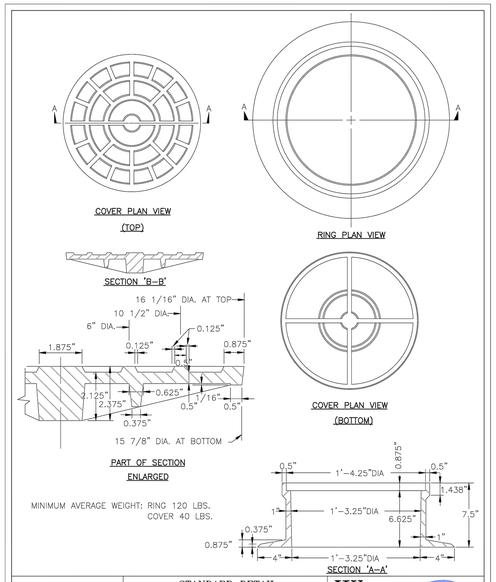

DATE: 2001	STANDARD DETAIL	CITY OF WILMINGTON NORTH CAROLINA
DRAWN BY JSR/CMR	MONUMENT CASTING DETAIL	CITY OF WILMINGTON ENGINEERING PO BOX 1810 WILMINGTON, NC 28402 (910) 341–7807
CHECKED BY B.P., P.E.		
SCALE NOT TO SCALE		SD 14-05

**** COMPACTED ABC NOTE–1:**
COMPACTED ABC MUST MEET THE NCDOT STANDARD SPECIFICATION GRADATION. REFER TO NCDOT STD SPECS (JAN 2012 EDITION) SECTION 520, AND SECTIONS 1005, 1006, AND 1010 FOR ALL OF THE MATERIAL GRADATION AND SPECIFICATIONS.

**** COMPACTED ABC NOTE–2:**
GRANITE BASED ABC IS NOT REQUIRED FOR THIS PROJECT. THE FOLLOWING TYPE OF MATERIALS MAY BE USED FOR ABC;

1. MARL – 6" IN DEPTH;
2. CRUSHED CONCRETE – CAN REDUCE TO 4" IN DEPTH;
3. ASPHALT MILLING CRUSHED TO ½" DIAMETER – 6" IN DEPTH.

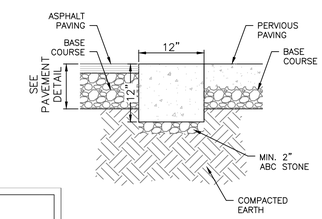

(L) 12" RIBBON CURB DETAIL
NOT TO SCALE

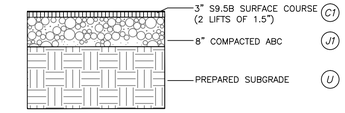

ASPHALT PAVEMENT SECTION
(STREET SECTION)
NOT TO SCALE

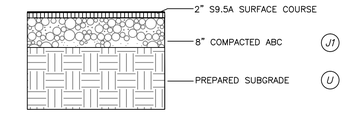

ASPHALT PAVEMENT SECTION
(ACCESS DRIVE/PARKING LOT)
NOT TO SCALE

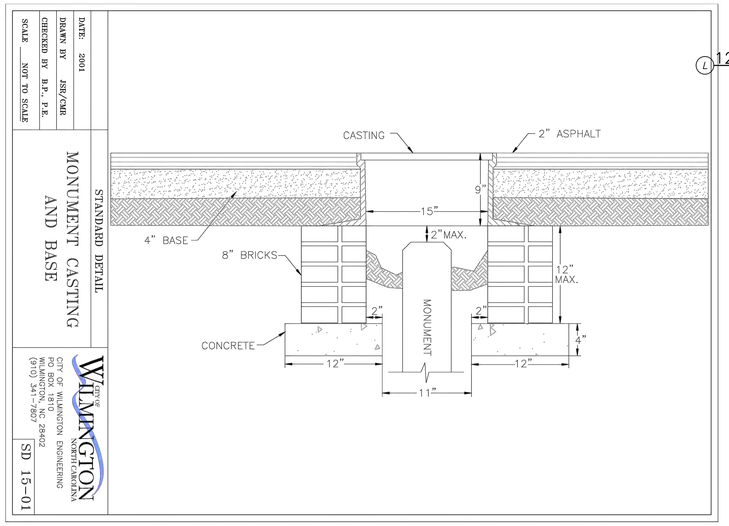

DATE: 2001	STANDARD DETAIL	CITY OF WILMINGTON NORTH CAROLINA
DRAWN BY JSR/CMR	MONUMENT CASTING AND BASE	CITY OF WILMINGTON ENGINEERING PO BOX 1810 WILMINGTON, NC 28402 (910) 341–7807
CHECKED BY B.P., P.E.		
SCALE NOT TO SCALE		SD 15-01

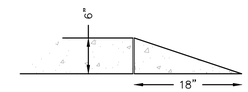

CURB TAPER
NOT TO SCALE

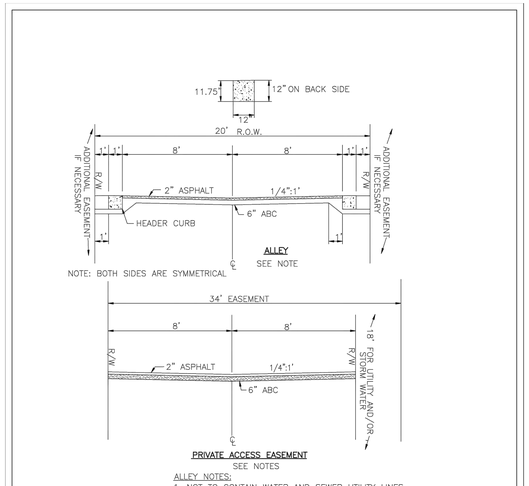

ALLEY NOTES:
1. NOT TO CONTAIN WATER AND SEWER UTILITY LINES

PRIVATE ACCESS EASEMENT NOTES:
1. 400' MAXIMUM LENGTH TO FURTHEST UNIT FROM PUBLIC STREET.
2. SERVES A MAXIMUM OF 4 SINGLE FAMILY OR DUPLEX UNITS.
3. 23' WIDTH REQUIRED AT STREET INTERSECTION.

DATE: OCTOBER, 2012	STANDARD DETAIL	CITY OF WILMINGTON NORTH CAROLINA
DRAWN BY JSR/CMR	ALLEY & PRIVATE ACCESS EASEMENT SECTIONS W/HEADER CURB, RESIDENTIAL	CITY OF WILMINGTON ENGINEERING PO BOX 1810 WILMINGTON, NC 28402 (910) 341–7807
CHECKED BY B.P., P.E.		
SCALE NOT TO SCALE		SD 1-14

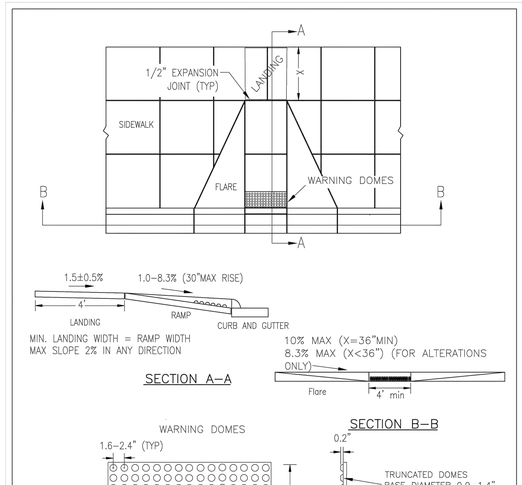

WARNING DOME NOTES:
1. USE CONTRASTING COLORS, RED OR BLACK ON WHITE PAVEMENT.
2. USE CAST IN PLACE PAVERS FOR NEW CONSTRUCTION.
3. RUBBER MATS ARE PERMITTED FOR RETROFITS.
4. LANDING AND RAMP WIDTH MAY BE REDUCED TO 3' WHERE SPACE IS LIMITED AND DESIGN IS APPROVED BY THE CITY ENGINEER.

DATE: DECEMBER, 2010	STANDARD DETAIL	CITY OF WILMINGTON NORTH CAROLINA
DRAWN: PB/JSR	PERPENDICULAR CURB RAMP ADJACENT TO WALKING SURFACE	CITY OF WILMINGTON ENGINEERING PO BOX 1810 WILMINGTON N.C. 28402 (910) 341–7807
CHECKED: DEC		
SCALE NOT TO SCALE		SD 3-07

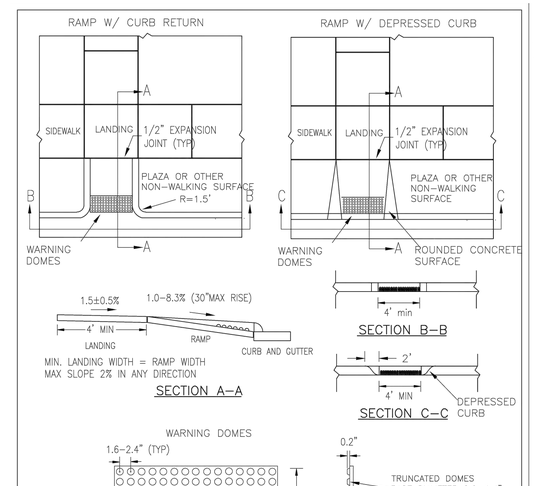

WARNING DOME NOTES:
1. USE CONTRASTING COLORS, RED OR BLACK ON WHITE PAVEMENT.
2. USE CAST IN PLACE PAVERS FOR NEW CONSTRUCTION.
3. RUBBER MATS ARE PERMITTED FOR RETROFITS.
4. LANDING AND RAMP WIDTH MAY BE REDUCED TO 3' WHERE SPACE IS LIMITED AND DESIGN IS APPROVED BY THE CITY ENGINEER.

DATE: DECEMBER, 2010	STANDARD DETAIL	CITY OF WILMINGTON NORTH CAROLINA
DRAWN: PB/JSR	PERPENDICULAR CURB RAMP ADJACENT TO PLAZA	CITY OF WILMINGTON ENGINEERING PO BOX 1810 WILMINGTON N.C. 28402 (910) 341–7807
CHECKED: DEC		
SCALE NOT TO SCALE		SD3-08

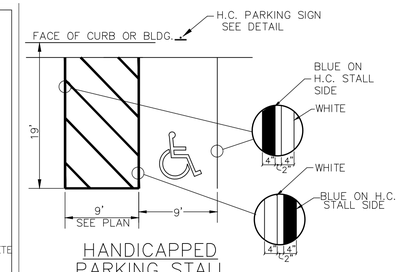

HANDICAPPED PARKING STALL
NOT TO SCALE

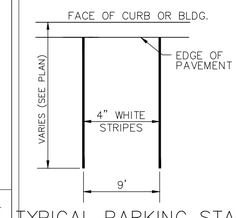

TYPICAL PARKING STALL
NOT TO SCALE

REV.NO.	DESCRIPTIONS	DATE
E	CITY OF WILMINGTON TRC / STORMWATER / CFPUA RE–SUBMITTAL	01/22/2016
D	CITY OF WILMINGTON TRC RE–SUBMITTAL	11/12/2015
C	CITY OF WILMINGTON TRC / STORMWATER / TREE REMOVAL, NEW HANOVER COUNTY EROSION CONTROL AND CFPUA SUBMITTAL	09/16/2015
B	CITY OF WILMINGTON SRB MYLARS	07/27/2015
A	CITY OF WILMINGTON TRC CONCEPT SUBMITTAL	05/06/2015

REVISIONS

SEAL

FINAL DRAWINGS - FOR REVIEW PURPOSES ONLY

SEAL

McKIM&CREED
243 North Front Street
Wilmington, North Carolina 28401
Phone: (910)343–1048, Fax: (910)251–8282
License: F–1222
www.mckimcreed.com

NASH
NORTH AMERICA SEKISUI HOUSE, LLC
RIVERLIGHTS™
by
Newland COMMUNITIES

RIVERLIGHTS CONVENTIONAL NEIGHBORHOOD PHASE II

SITE DETAILS

DATE:	----
MCE PROJ. #	02735–0141
DRAWN	TCM/EEM
DESIGNED	KCBE
CHECKED	NJL
PROJ. MGR.	RMC

SCALE
HORIZONTAL: 1"=100'
VERTICAL: N/A

M&C FILE NUMBER CS–501
DRAWING NUMBER 27

STATUS: FINAL DESIGN
ISSUED FOR PERMITTING
REVISION E

GENERAL NOTES

1. IN ACCORDANCE WITH N.C.G.S. 136-44.14, ALL STREET CURBS BEING CONSTRUCTED OR RECONSTRUCTED SHALL PROVIDE WHEELCHAIR RAMPS FOR THE PHYSICALLY HANDICAPPED ON EACH SIDE OF ANY STREET OR ROAD, WHERE CURBS AND SIDEWALKS ARE PROVIDED AND AT OTHER MAJOR POINTS OF PEDESTRIAN FLOW.
2. WHEELCHAIR RAMPS SHALL BE LOCATED AS INDICATED IN DETAIL DRAWINGS; HOWEVER, EXISTING LIGHT POLES, FIRE HYDRANTS, DROP INLETS, ETC. MAY AFFECT PLACEMENT.
3. CURB RAMPS SHALL HAVE DETECTABLE WARNINGS EXTENDING THE FULL WIDTH OF THE RAMP AND A MINIMUM OF 2-FT. IN LENGTH.

CONSTRUCTION NOTES

1. CONSTRUCTION SHALL CONFORM WITH CONSTRUCTION STANDARDS OF THE GOVERNING BODY WHICH HAS JURISDICTION OF THE PARTICULAR STREET.
2. WHEELCHAIR RAMPS SHALL BE CONSTRUCTED OF CLASS "A" CONCRETE WITH THE SURFACE HAVING A ROUGH, NON-SKID TYPE FINISH.
3. A ½-IN. EXPANSION JOINT SHALL BE REQUIRED WHERE THE CONCRETE WHEELCHAIR RAMP JOINS ANY RIGID PAVEMENT OR STRUCTURE.
4. IN NO CASE SHALL THE WIDTH OF A CURB RAMP OR CURB CUT BE LESS THAN 40-IN. (3-FT, 4-IN.), NOT INCLUDING THE FLARED SIDES.
5. TRANSITIONS FROM RAMPS TO WALKS, GUTTERS OR STREETS SHALL BE FLUSH AND FREE OF ABRUPT CHANGES.
6. THE MAXIMUM SLOPE ON THE CURB RAMP RUN IS 1:12.
7. THE MAXIMUM CROSS SLOPE OF THE CURB RAMP IS 1:50.
8. MAXIMUM SLOPES OF ADJOINING GUTTERS, ROAD SURFACE IMMEDIATELY ADJACENT TO THE CURB RAMP, OR ACCESSIBLE ROUTE SHALL NOT EXCEED 1:20.
9. ANY RAISED ISLANDS IN CROSSINGS SHALL BE CUT THROUGH LEVEL WITH THE STREET OR HAVE CURB RAMPS AT BOTH SIDES AND A LEVEL AREA AT LEAST 48-IN. LONG BETWEEN THE CURB RAMPS.
10. DETECTABLE WARNINGS SHALL CONSIST OF RAISED TRUNCATED DOMES WITH A DIAMETER OF NOMINAL 0.9-IN., A HEIGHT OF NOMINAL 0.2-IN. AND A CENTER-TO-CENTER SPACING OF NOMINAL 2.35-IN. AND SHALL CONTRAST VISUALLY WITH ADJOINING SURFACES, EITHER LIGHT-ON-DARK, OR DARK-ON-LIGHT.

ADDITIONAL NOTES

1. STOP BARS SHALL BE USED WHERE IT IS IMPORTANT TO INDICATE THE POINT BEHIND WHICH VEHICLES ARE REQUIRED TO STOP IN COMPLIANCE WITH A TRAFFIC SIGNAL, STOP SIGN OR OTHER LEGAL REQUIREMENT.
2. PARKING SHALL BE ELIMINATED A MINIMUM OF 20 FEET BACK OF THE PEDESTRIAN CROSSWALK.
3. ALL PAVEMENT MARKINGS SHALL BE IN ACCORDANCE WITH THE LATEST EDITION OF THE MANUAL OF UNIFORM TRAFFIC CONTROL DEVICES, PUBLISHED BY THE FEDERAL HIGHWAY ADMINISTRATION. THIS DOCUMENT IS AVAILABLE FROM THE SUPERINTENDENT OF DOCUMENTS, U.S. GOVERNMENT PRINTING OFFICE, WASHINGTON, D.C. 20402.
4. INSTALL REFLECTORS PER CITY AND NCDOT STANDARDS. TRAFFIC ENGINEERING MUST APPROVE OF PAVEMENT MARKING LAYOUT PRIOR TO ACTUAL STRIPING.
5. CURB RAMPS AT MARKED CROSSINGS SHALL BE WHOLLY CONTAINED WITHIN THE MARKINGS, EXCLUDING ANY FLARED SIDES.
6. THE BOTTOM OF DIAGONAL (CORNER TYPE) CURB RAMPS AT MARKED CROSSINGS SHALL HAVE 48-IN. MINIMUM CLEAR SPACE WITHIN THE MARKINGS.
7. IF DIAGONAL CURB RAMPS HAVE FLARED SIDES, THEY SHALL HAVE AT LEAST A 24-IN. LONG SEGMENT OF STRAIGHT CURB LOCATED ON EACH SIDE OF THE CURB RAMP AND WITHIN THE MARKED CROSSING.

PAVEMENT MARKER SPACING CHART

TYPE OF PAVEMENT MARKING	TYPICAL SPACING in FT (speed limit <= 45mph)
Centerlines--along through lanes	40
Centerlines--along horizontal curves	per Traffic Engineering
Skip Lines--along through lanes	40
Turn Lanes--Skip Lines	40
Turn Lanes--Solid Lane Lines	20
Turn Lanes--Centerlines	40
Painted Islands--White	20
Painted Islands--Yellow	40
Raised Median Islands	40
Other Markings	per Traffic Engineering

GENERAL NOTES

-CRYSTAL/RED MARKERS SHALL BE USED ALONG WHITE PAVEMENT MARKINGS UNLESS OTHERWISE DIRECTED BY TRAFFIC ENGINEERING. RED SIDE OF MARKER TO FACE "WRONG-WAY" TRAFFIC.
-PAVEMENT MARKERS SHOULD NOT BE PLACED CLOSER THAN 2 INCHES TO A PAVEMENT CONSTRUCTION JOINT, EXCEPT WHEN PLACED BETWEEN DOUBLE YELLOW CENTERLINES.
-PAVEMENT MARKERS SHALL NOT BE PLACED DIRECTLY ON PAVEMENT MARKINGS.
-PAVEMENT MARKERS USED IN CONJUNCTION WITH DOUBLE YELLOW CENTERLINES SHALL BE PLACED MID-WAY BETWEEN THE LINES, WITH A GAP BETWEEN MARKER AND MARKINGS.

PLACEMENT ALONG YELLOW CENTERLINES

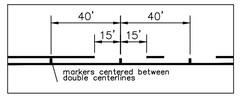

PLACEMENT ALONG TURN LANE LINES

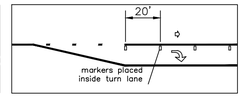

PLACEMENT ALONG WHITE SKIP LINES

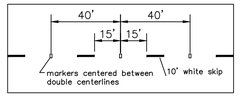

PAVEMENT MARKINGS
RAISED PAVEMENT MARKERS
SD 11-10

LEGEND

- DIRECTION OF TRAFFIC FLOW
- AMBER / AMBER MARKER
- CRYSTAL / RED MARKER

LANE LINE OFFSET DETAIL

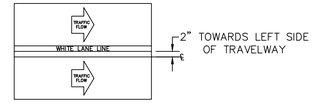

EDGE LINE OFFSET DETAIL

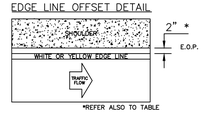

CENTER LINE OFFSET DETAIL

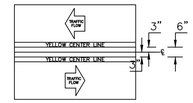

PAVEMENT MARKINGS
OFFSETS
SD 11-02

TABLE 1

EDGE LINE OFFSETS FOR 2-LANE, 2-WAY ROADWAYS WITH UN-PAVED SHOULDERS

WIDTH OF TRAVEL PAVEMENT	MAX. EDGE LINE OFFSET FROM E. O. P.	MINIMUM LANE WIDTH
16' – 20'	2'	8' – 10'
22'	2"	11'
24'	1"	11'
26'	2'	11'
28'	2'	12'
30'	3'	12'
32'	4'	12'

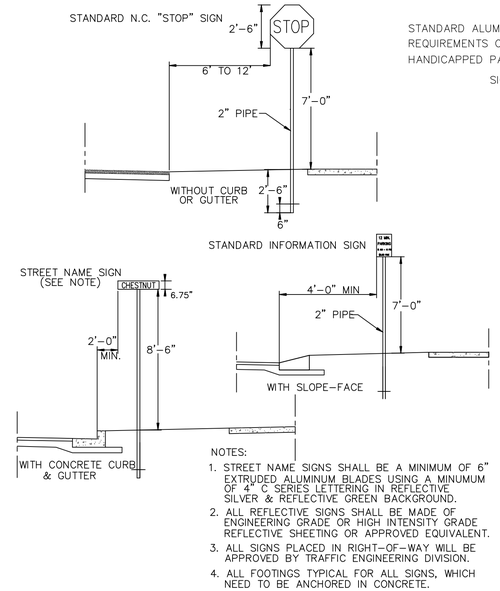

NOTES:

1. STREET NAME SIGNS SHALL BE A MINIMUM OF 6" EXTRUDED ALUMINUM BLADES USING A MINUMUM OF 4" C SERIES LETTERING IN REFLECTIVE SILVER & REFLECTIVE GREEN BACKGROUND.
2. ALL REFLECTIVE SIGNS SHALL BE MADE OF ENGINEERING GRADE OR HIGH INTENSITY GRADE REFLECTIVE SHEETING OR APPROVED EQUIVALENT.
3. ALL SIGNS PLACED IN RIGHT-OF-WAY WILL BE APPROVED BY TRAFFIC ENGINEERING DIVISION.
4. ALL FOOTINGS TYPICAL FOR ALL SIGNS, WHICH NEED TO BE ANCHORED IN CONCRETE.

STANDARD SIGN INSTALLATION LOCATION
SD 15-04
NOT TO SCALE

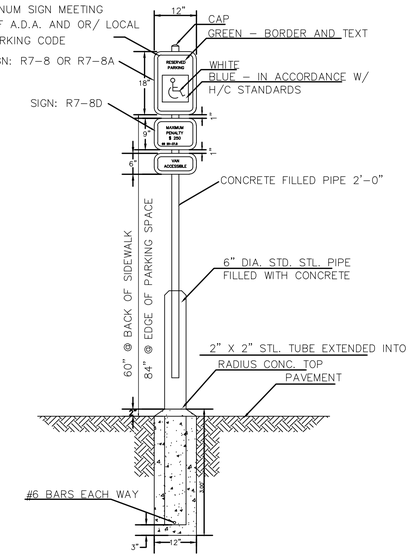

HANDICAP PARKING SIGN
NOT TO SCALE

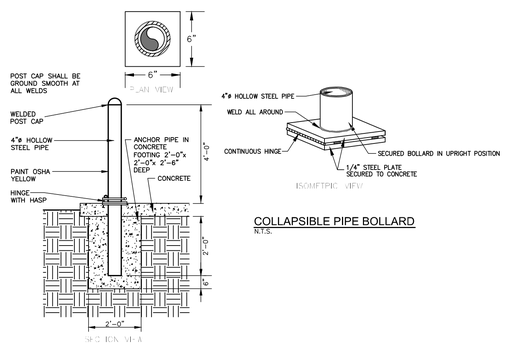

COLLAPSIBLE PIPE BOLLARD
N.T.S.

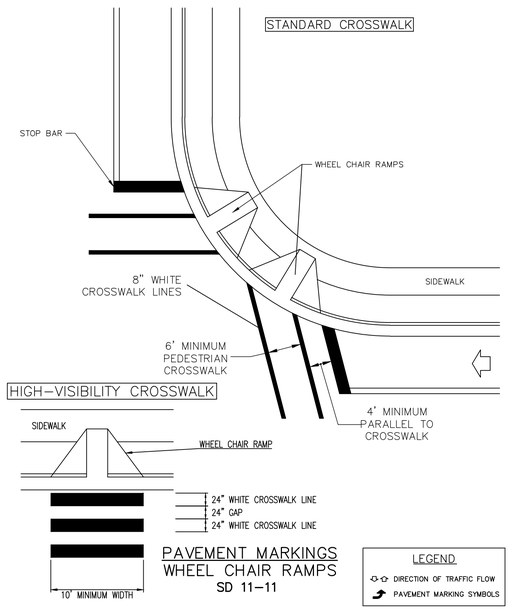

PAVEMENT MARKINGS
WHEEL CHAIR RAMPS
SD 11-11

LEGEND

- DIRECTION OF TRAFFIC FLOW
- PAVEMENT MARKING SYMBOLS

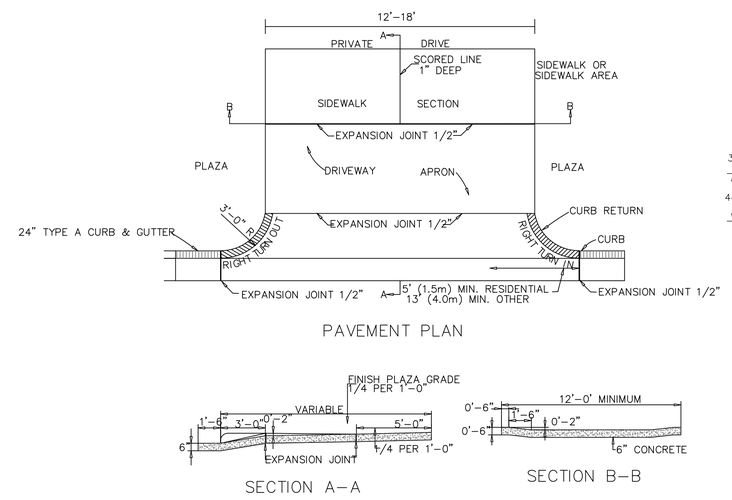

MODIFIED STANDARD DRIVEWAY DETAIL
MODIFIED SD 8-02
NOT TO SCALE

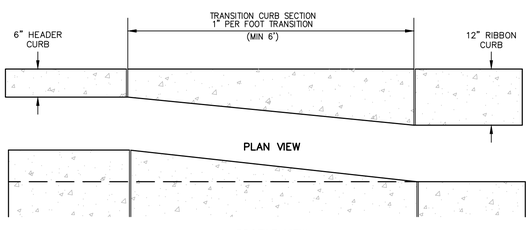

TRANSITION CURB
NOT TO SCALE

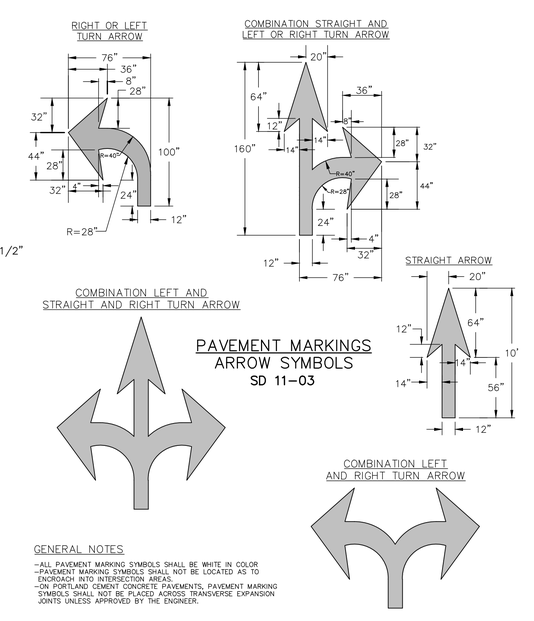

PAVEMENT MARKINGS
ARROW SYMBOLS
SD 11-03

GENERAL NOTES

-ALL PAVEMENT MARKING SYMBOLS SHALL BE WHITE IN COLOR
-PAVEMENT MARKING SYMBOLS SHALL NOT BE LOCATED AS TO ENCROACH INTO INTERSECTION AREAS.
-ON PORTLAND CEMENT CONCRETE PAVEMENTS, PAVEMENT MARKING SYMBOLS SHALL NOT BE PLACED ACROSS TRANSVERSE EXPANSION JOINTS UNLESS APPROVED BY THE ENGINEER.

REV.NO.	DESCRIPTIONS	DATE
E	CITY OF WILMINGTON TRC / STORMWATER / CFPUA RE-SUBMITTAL	01/22/2016
D	CITY OF WILMINGTON TRC RE-SUBMITTAL	11/12/2015
C	CITY OF WILMINGTON TRC / STORMWATER / TREE REMOVAL, NEW HANOVER COUNTY EROSION CONTROL AND CFPUA SUBMITTAL	09/18/2015
B	CITY OF WILMINGTON SRB MYLARS	07/27/2015
A	CITY OF WILMINGTON TRC CONCEPT SUBMITTAL	05/06/2015

REVISIONS

FINAL DRAWINGS - FOR REVIEW PURPOSES ONLY

SEAL

SEAL

McKIM&CREED
243 North Front Street
Wilmington, North Carolina 28401
Phone: (910)343-1048, Fax: (910)251-8282
License: F-1222
www.mckimcreed.com

NASH — NORTH AMERICA SEKISUI HOUSE, LLC

RIVERLIGHTS™ by Newland COMMUNITIES

RIVERLIGHTS CONVENTIONAL NEIGHBORHOOD PHASE II

SITE DETAILS

DATE:	05/06/2015
MCE PROJ. #	02735-0141
DRAWN	TCM/EEM
DESIGNED	KCBE
CHECKED	NJL
PROJ. MGR.	RMC

SCALE
HORIZONTAL: 1"=100'
VERTICAL: N/A

M&C FILE NUMBER CS-502
DRAWING NUMBER 28

STATUS: FINAL DESIGN
ISSUED FOR PERMITTING
REVISION E

NOTES:
1. NO JOINT SHALL BE INSTALLED BETWEEN THE MAIN SERVICE TAP AND THE METER STOP. ALL SERVICES SHALL BE INSTALLED PERPENDICULAR TO MAIN.
2. SERVICE SADDLES ON PVC MAINS SHALL BE WIDE BAND BRASS BODY: SADDLE McDONALD 3801 OR EQUIVALENT.
3. METER BOXES SUSCEPTIBLE TO TRAFFIC SHALL CONFORM TO ASTM A48, CLASS 30B AND AASHTO H20 LOAD RATING STANDARDS (SIP MODEL 4242, OR APPROVED EQUIVALENT).

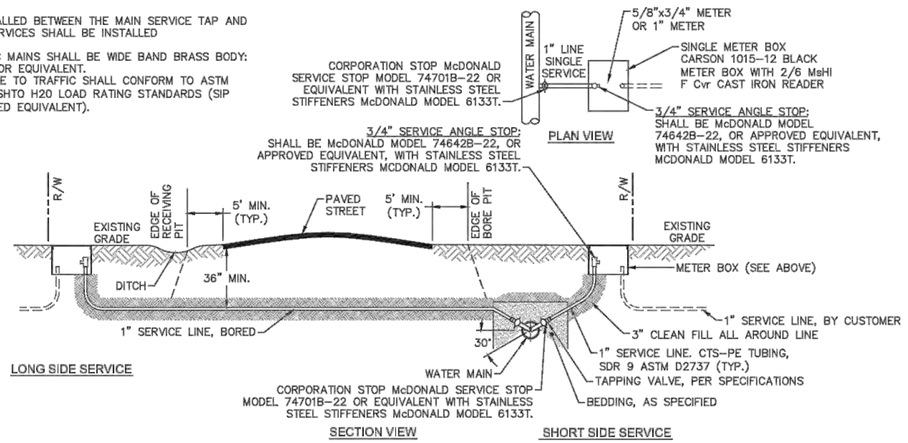

NOTE:
TYPICAL WATER SERVICE CONNECTION FOR RESIDENTIAL SINGLE FAMILY HOME ON CFPUA WATER SYSTEM

WD-18 SINGLE SERVICE CONNECTION
NOT TO SCALE

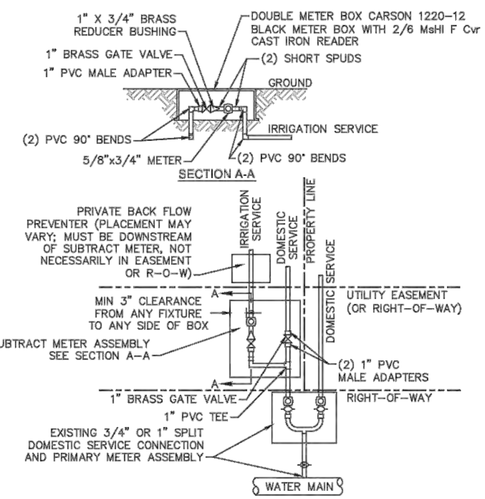

NOTES:
1. BEYOND THE PRIMARY DOMESTIC METER ASSEMBLY, CFPUA IS ONLY RESPONSIBLE FOR METER AND WASHERS OF SUBTRACT METER ASSEMBLY.
2. ALL PIPE AND FITTINGS UP TO FINAL SERVICE LINE TO BE 1" EXCLUDING METERS.

PLAN VIEW

(MULTIPLE DOMESTIC SERVICES PER TAP)

WD-8 DOUBLE SERVICE CONNECTION USING SUBTRACT METER
NOT TO SCALE

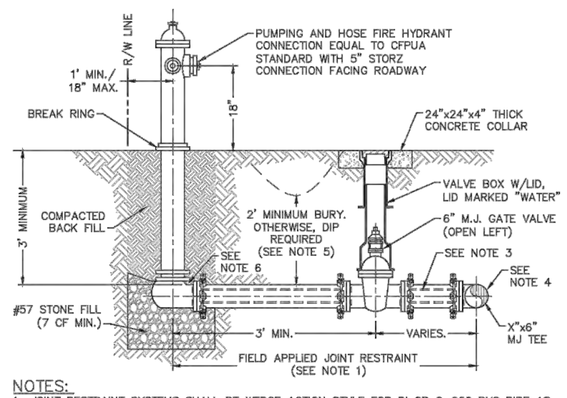

NOTES:
1. JOINT RESTRAINT SYSTEMS SHALL BE WEDGE ACTION STYLE FOR DI OR C-900 PVC PIPE AS MANUFACTURED BY EBAA IRON, SIGMA, STAR PIPE PRODUCTS OR APPROVED EQUAL.
2. WHEN HYDRANT LEGS REQUIRE FULL LENGTH PIPE SECTIONS, OVER BELL RESTRAINT SYSTEM SHALL HAVE 316 STAINLESS STEEL HARNESS AND FASTENERS.
3. CONTINUOUS 316 STAINLESS STEEL RODS (TEE TO VALVE AND VALVE TO HYDRANT) MAY BE USED WITH COR-BLUE MJ T-BOLT AND GASKET KITS, AS AN ALTERNATIVE.
4. HYDRANT TEE SHALL BE RESTRAINED ON EACH SIDE OF MAIN PLUS ANY VALVE, FITTING, OR JOINT IN MAIN WITHIN 10-FEET OF HYDRANT TEE.
5. HYDRANT AND VALVE SHALL BE PLACED OUTSIDE DITCH LIMITS.
6. WEEP HOLES OPEN AND UNBLOCKED TO DRAIN.

WD-10 FIRE HYDRANT ASSEMBLY
NOT TO SCALE

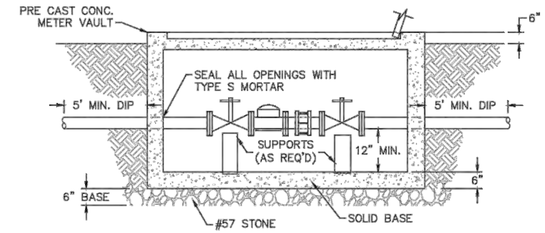

METER VAULT SECTION A-A

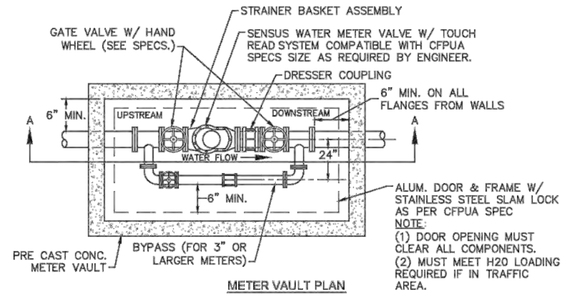

METER VAULT PLAN

FOR WATER METERS LARGER THAN 2"

WD-1 WATER METER VAULT
NOT TO SCALE

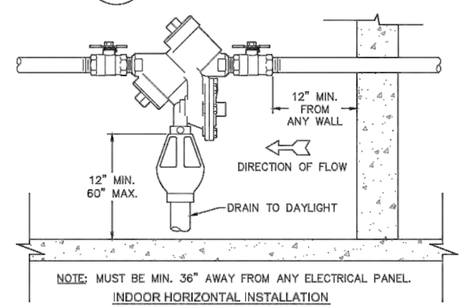

NOTE: MUST BE MIN. 36" AWAY FROM ANY ELECTRICAL PANEL.

INDOOR HORIZONTAL INSTALLATION

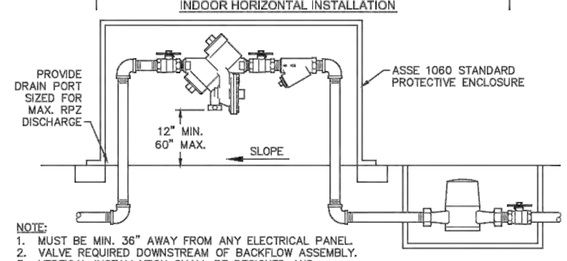

NOTE:
1. MUST BE MIN. 36" AWAY FROM ANY ELECTRICAL PANEL.
2. VALVE REQUIRED DOWNSTREAM OF BACKFLOW ASSEMBLY.
3. VERTICAL INSTALLATION SHALL BE DESIGNED AND SUBMITTED TO CFPUA ESMD FOR APPROVAL.

OUTDOOR HORIZONTAL INSTALLATION

WD-12 REDUCED PRESSURE PRINCIPLE ASSEMBLY
NOT TO SCALE

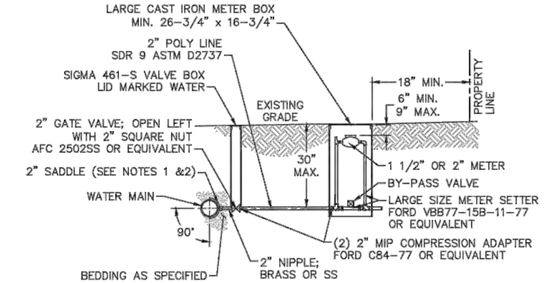

NOTES:
1. ALL SERVICES SHALL BE INSTALLED PERPENDICULAR TO MAIN.
2. SERVICE SADDLES ON PVC MAINS SHALL BE WIDE BAND BRASS BODY: McDONALD 3800, FORD S90 (DOUBLE STRAP) OR EQUIVALENT.
3. METER BOXES SUSCEPTIBLE TO TRAFFIC SHALL CONFORM TO ASTM A48, CLASS 30B AND AASHTO H20 LOAD RATING STANDARDS (OLDCASTLE PRECAST MODEL B1730 OR APPROVED EQUIVALENT).
4. METER BOXES SUSCEPTIBLE TO INCIDENTAL, NON-DELIBERATE TRAFFIC SHALL CONFORM TO ANSI/SCTE 77 TIER 15 LOAD RATING STANDARDS (SYNERTECH MODEL DUO 17x30 OR APPROVED EQUIVALENT).
5. NON-TRAFFIC METER BOXES SHALL BE SIGMA MB2203 OR APPROVED EQUIVALENT.
6. 3" CLEAN FILL REQUIRED ALL AROUND 2" POLY SERVICE LINE.

FOR 1-1/2" OR 2" WATER SERVICES

WD-11 LARGE METER
NOT TO SCALE

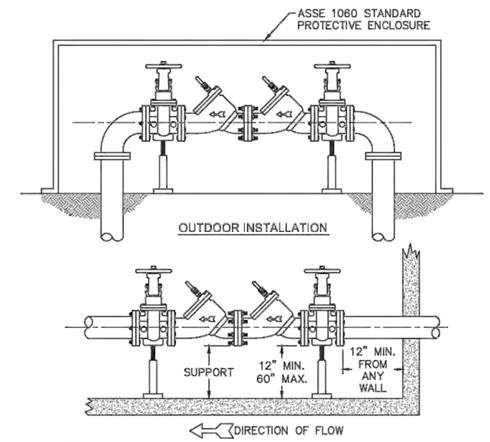

NOTE:
1. MUST BE MIN. 36" AWAY FROM ANY ELECTRICAL PANEL.
2. VALVE REQUIRED DOWNSTREAM OF BACKFLOW ASSEMBLY.
3. VERTICAL INSTALLATION SHALL BE DESIGNED AND SUBMITTED TO CFPUA ESMD FOR APPROVAL

INDOOR INSTALLATION

WD-7 DOUBLE CHECK VALVE ASSEMBLY
NOT TO SCALE

GENERAL NOTES:
1. NO EXCAVATED MATERIAL SHALL BE PLACED IN ANY STREAM, DITCH OR DRAINAGE-WAY.
2. THE CONTRACTOR IS RESPONSIBLE FOR LOCATING ALL UNDERGROUND UTILITIES BEFORE ANY CONSTRUCTION BEGINS.
3. THE CONTRACTOR IS RESPONSIBLE FOR TEMPORARY SEDIMENT AND EROSION CONTROL MEASURES WHILE CONSTRUCTION IS IN PROGRESS.
4. THE CONTRACTOR IS RESPONSIBLE FOR STABILIZATION OF ALL DISTURBED AREAS.
5. THE CONTRACTOR IS RESPONSIBLE FOR LAY DOWN AND STOCKPILE AREAS (TO ARRANGE AND ENSURE COMPLIANCE WITH ALL LOCAL AND STATE REGULATIONS).

THE DETAILS SHOWN HEREON SUPERCEDE CFPUA WRITTEN TECHNICAL SPECIFICATIONS VERSIONS 1.00 - 1.04

REV:	DESCRIPTION:	DATE:
1	Single Service Connection, Double Service Connection, and Large Meter Revised	10/26/12
2	Single Service Connection and Fire Hydrant Details Revised	7/23/13
3	Fire Hydrant Detail Revised	01/03/14
4	Revised Fire Hydrant Assembly To Show 5" STORZ Connection	04/10/15

CFPUA WATER DISTRIBUTION SYSTEM

STANDARD DETAILS

CAPE FEAR PUBLIC UTILITY AUTHORITY
235 GOVERNMENT CENTER DRIVE
WILMINGTON, NC 28403
OFFICE: (910)332-6560

Stewardship. Sustainability. Service.

DATE 1/9/12
SCALE N/A
DRAWN BY: CFPUA
CHECKED BY: CFPUA
PROJECT NO

SHEET NO: WSD-1

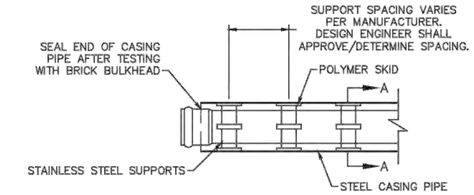

PLAN

NOTE: PIPE SUPPORT TO BE PLACED TO PROVIDE PROPER SUPPORT, ALIGNMENT, AND GRADE AS SPECIFIED. CONTINUOUS SUPPORTS MAY BE USED AS ALTERNATIVE. OIL, GREASE, OR PETROLEUM PRODUCT MAY NOT BE USED AS LUBRICANT.

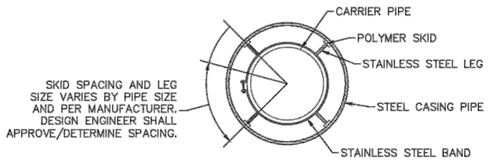

SECTION A-A

WD-15 PIPE CASING SUPPORT DETAIL

NOT TO SCALE

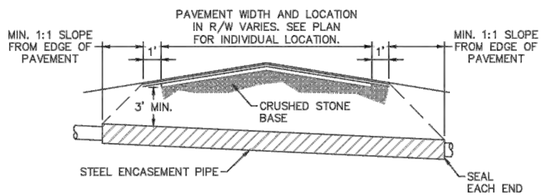

NOTES:
1. CASING WILL BE INSTALLED AT LINE AND GRADE SHOWN ON INDIVIDUAL PROFILE FOR EACH CROSSING. BORING/JACKING TO LINE AND GRADE IS REQUIRED.
2. TRACER WIRE SHALL BE CONTINUED THROUGH CASING.

WD-16 TYPICAL BORING/ JACKING DETAIL

NOT TO SCALE

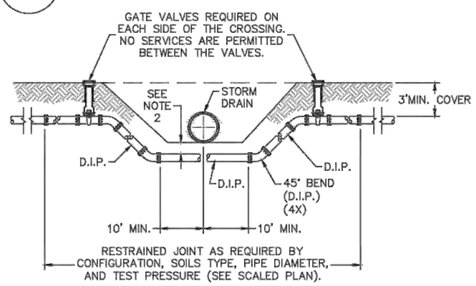

NOTES:
1. USE PRESSURE CLASS 350 DIP, UNLESS SPECIFIED OTHERWISE.
2. MINIMUM DEPTH REQUIRED, UNLESS SPECIFIED OTHERWISE BY CFPUA:
   a. IN DOT R/W, 36" MIN. TYPICAL, OR 24" MIN. WHEN CROSSING A DITCH LINE.
   b. ALL OTHER LOCATIONS, 30" MIN.
   c. WHEN STORM DRAIN INVERT IS BURIED AT OR BELOW ABOVE DEPTHS, 18" MIN. CLEARANCE IS REQUIRED.

WD-2 WATER MAIN DITCH AND STORM DRAIN CROSSING

NOT TO SCALE

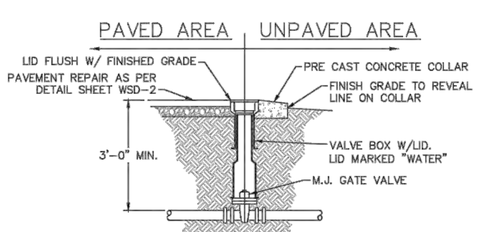

WD-3 VALVE DETAIL

NOT TO SCALE

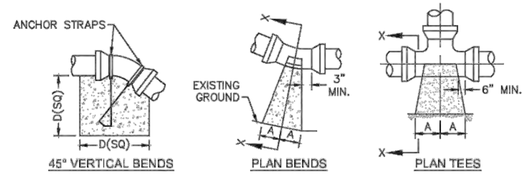

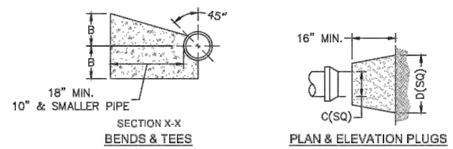

SIZE	90 BENDS		45 BENDS		22-1/2 BENDS		TEES/PLUGS		45 VERT. BENDS
	A	B	A	B	A	B	A	B	
3"	8"	6"	5"	6"	3"	7"	6"	8"	27"
4"	8"	9"	5"	8"	3"	11"	6"	9"	28"
6"	14"	11"	9"	9"	8"	8"	12"	9"	36"
8"	16"	16"	12"	12"	10"	13"	14"	13"	42"
10"	18"	22"	15"	14"	14"	16"	18"	15"	50"
12"	20"	28"	18"	17"	16"	16"	22"	18"	62"
14"	26"	29"	21"	19"	18"	18"	26"	20"	72"
16"	33"	29"	25"	21"	20"	21"	32"	21"	83"
18"	40"	30"	28"	24"	22"	23"	36"	24"	88"

NOTES:
1. BASED ON 160 PSI TEST PRESSURE AND 2000 PSF SOIL BEARING CAPACITY.
2. ALL BEARING SURFACES TO BE CARRIED TO UNDISTURBED GROUND.
3. USE MEG-A-LUG (PREFERRED) IN LIEU OF BLOCKING AND RODDING.

WD-4 THRUST BLOCK DETAIL

NOT TO SCALE

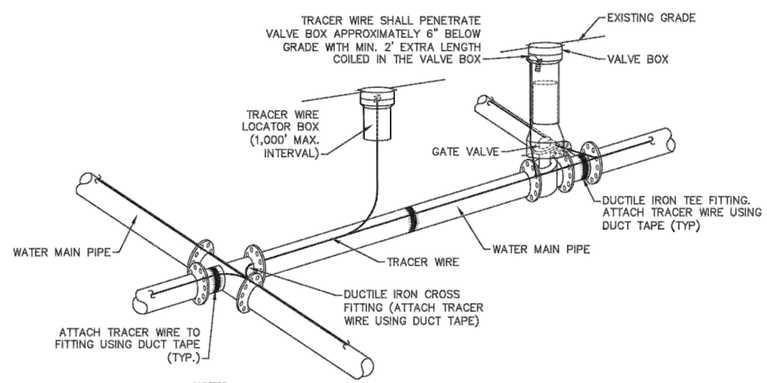

NOTES:
1. TRACER WIRE SHALL BE #10 COPPER SOLID CORE COPPER WIRE WITH GAS AND OIL RESISTANT INSULATION.
2. WIRE SHALL BE STRAPPED TO ALL PVC WATER MAIN PIPING WITH DUCT TAPE AT 12 FOOT INTERVALS ALONG THE PIPE.
3. SECURE WIRE TO ALL TEE AND CROSS FITTINGS WITH DUCT TAPE.
4. ALL SPLICES IN THE WIRE SHALL BE MADE WITH 3M DBR DIRECT BURY SPLICE KIT AN UNDERGROUND RATED, WATERTIGHT, AND APPROVED SPLICE CONNECTOR OR APPROVED EQUAL.

WD-17 TRACER WIRE DETAIL

NOT TO SCALE

WD-6 SAMPLING STATION

NOT TO SCALE

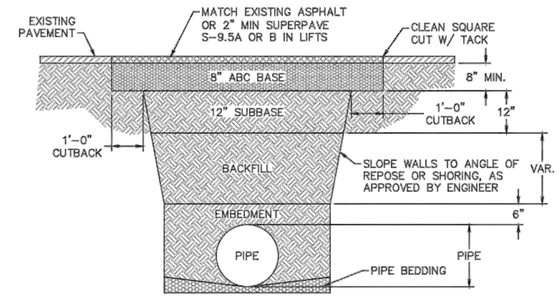

NOTES:
1. BACKFILL SHALL BE SUITABLE MATERIAL THAT IS FREE FROM HEAVY CLAY, GUMBOS, DEBRIS, ORGANICS AND LITTLE TO NO EXCESSIVE MOISTURE.
2. SELECT BACKFILL MAY BE SUBSTITUTED OR REQUIRED BY CITY TO ACHIEVE COMPACTION, (I.E. #57, ABC, CRUSHED LIMESTONE, CLEAN SAND, FLOWABLE FILL, ETC).
3. 8-INCH OF ABC BASE MATERIAL SHALL BE USED ON CITY STREETS.
4. BACKFILL AND BASE MATERIALS SHALL BE COMPACTED 12" MINIMUM LIFTS
5. SOIL SHALL BE COMPACTED BY A MECHANIZED TAMPER (I.E JUMPING JACK), HOWEVER, VIBRATORY ROLLERS > 18" WIDTH MAY BE USED FOR LARGER EXCAVATIONS. THE PLATE TAMP METHOD SHALL NOT BE USED.
6. ALL APPROVED CASTINGS SHALL BE SET FLUSH TO GRADE AND SUPPORTED IF APPLICABLE.
7. ABC BASE AND SUBBASE COMPACTED TO 98% AND BACKFILL AND EMBEDMENT COMPACTED TO 90% AS DETERMINED BY THE MODIFIED PROCTOR AASHTO METHOD T-99.
8. 1-FOOT CUTBACKS OF ASPHALT SHALL BE PREPARED ON UNDISTURBED SOIL. MINIMUM ASPHALT DENSITY IS 90%.

[FOR PRIVATE ROADS AND PAVED AREAS: CONTRACTOR TO MEET MIN. REQU REMENTS AS DEF NED BY RIGHT-OF-WAY OWNER FOR PUBLIC ROAD REPAIRS]

WD-14 PAVEMENT REPAIR WHERE PIPE INSTALLED

NOT TO SCALE

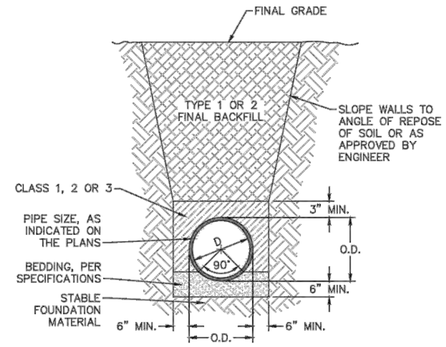

WD-13 TYPICAL TRENCH DETAIL

NOT TO SCALE

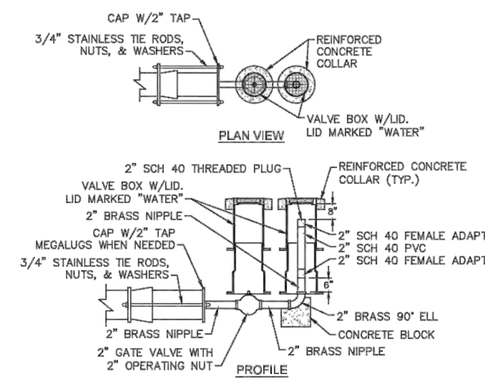

WD-5 2" BLOW-OFF

NOT TO SCALE

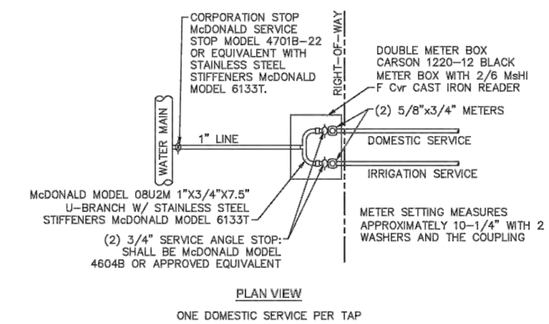

PLAN VIEW

ONE DOMESTIC SERVICE PER TAP

WD-9 DOUBLE SERVICE CONNECTION

NOT TO SCALE

GENERAL NOTES:
1. NO EXCAVATED MATERIAL SHALL BE PLACED IN ANY STREAM, DITCH OR DRAINAGE-WAY.
2. THE CONTRACTOR IS RESPONSIBLE FOR LOCATING ALL UNDERGROUND UTILITIES BEFORE ANY CONSTRUCTION BEGINS.
3. THE CONTRACTOR IS RESPONSIBLE FOR TEMPORARY SEDIMENT AND EROSION CONTROL MEASURES WHILE CONSTRUCTION IS IN PROGRESS.
4. THE CONTRACTOR IS RESPONSIBLE FOR STABILIZATION OF ALL DISTURBED AREAS.
5. THE CONTRACTOR IS RESPONSIBLE FOR LAY DOWN AND STOCKPILE AREAS (TO ARRANGE AND ENSURE COMPLIANCE WITH ALL LOCAL AND STATE REGULATIONS).

THE DETAILS SHOWN HEREON SUPERCEDE CFPUA WRITTEN TECHNICAL SPECIFICATIONS VERSIONS 1.00 - 1.04

REV:	DESCRIPTION:	DATE:
1	Revised Water Main Ditch and Storm Crossing Detail	11/12/13
2	Revised Water Main Ditch and Storm Crossing Detail	05/05/14
3	Revised Tracer Wire Detail	10/20/15

CFPUA WATER DISTRIBUTION SYSTEM

STANDARD DETAILS

CAPE FEAR PUBLIC UTILITY AUTHORITY
235 GOVERNMENT CENTER DRIVE
WILMINGTON, NC 28403
OFFICE: (910)332-6560
Stewardship. Sustainability. Service.

DATE 1/9/12
SCALE N/A
DRAWN BY CFPUA
CHECKED BY CFPUA
PROJECT NO. :

SHEET NO: WSD-2

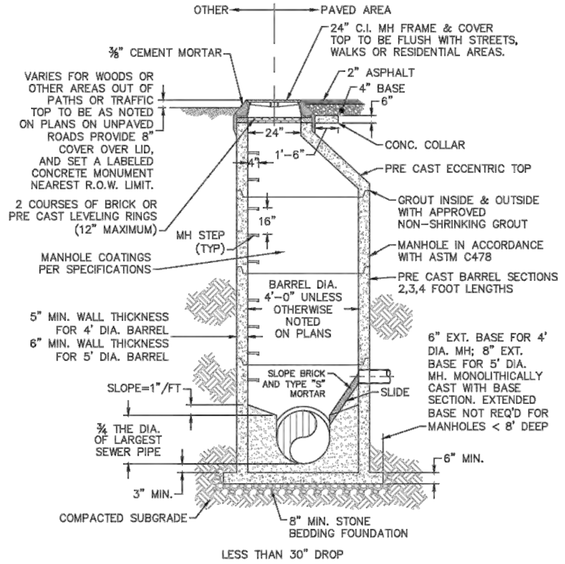

SD-1 PRECAST CONCRETE OFFSET MANHOLE TYPICAL
NOT TO SCALE

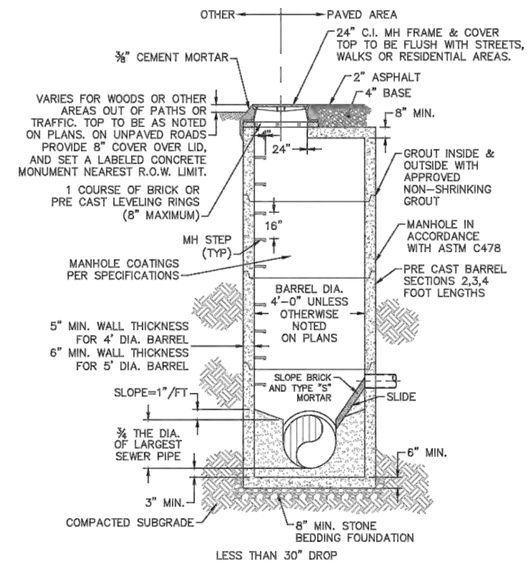

SD-2 PRECAST CONCRETE FLAT TOP MANHOLE TYPICAL
NOT TO SCALE

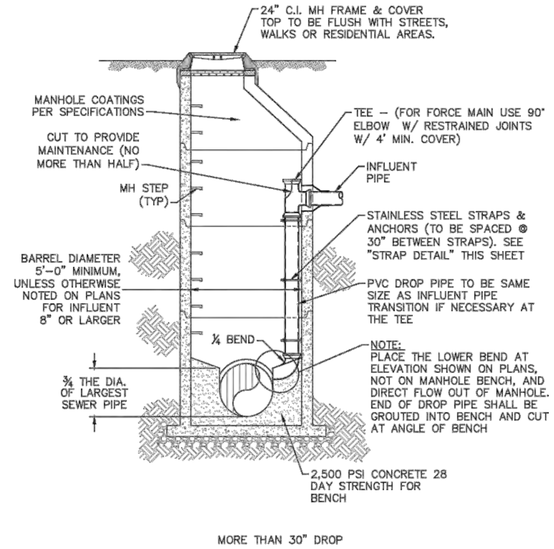

SD-3 DROP MANHOLE
NOT TO SCALE

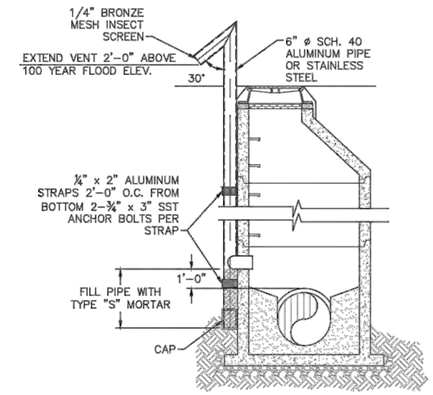

SD-4 STANDARD VENT MANHOLE
NOT TO SCALE

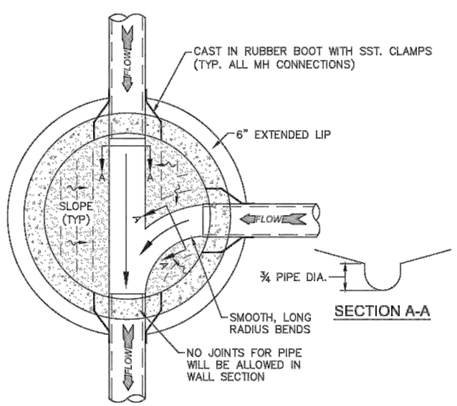

SD-5 MANHOLE FLOOR PLAN
NOT TO SCALE

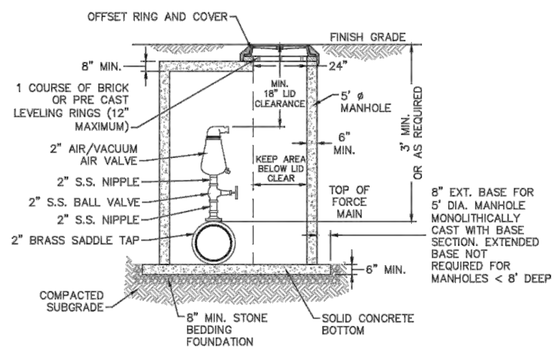

NOTES:
1. CONTRACTOR TO INSTALL VALVE AND MANHOLE AT SUFFICIENT DEPTH TO ALLOW FOR ACCESS.
2. FORCE MAIN TO BE OFFSET IN MANHOLE TO KEEP AREA BELOW LID CLEAR.
3. REFER TO SPECIFICATIONS FOR ADDITIONAL DETAILS.
4. USE CAST IN RUBBER BOOT WITH SST. CLAMPS FOR ALL MH CONNECTIONS, INCLUDING FORCE MAIN.

SD-6 AIR/ VACUUM AND AIR RELEASE COMBINATION VALVE
NOT TO SCALE

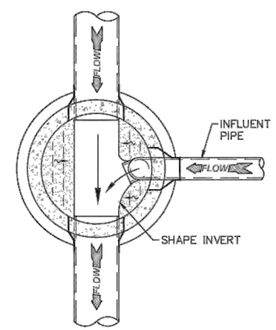

SD-7 DROP MANHOLE FLOOR PLAN
NOT TO SCALE

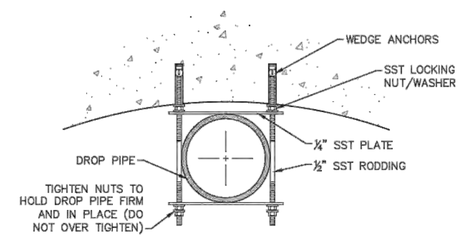

NOTE: ALL PARTS TO BE SST.

SD-8 STRAP DETAIL
NOT TO SCALE

CAPE FEAR PUBLIC UTILITY AUTHORITY STANDARD SEWER NOTES:

1. SEWER GUARDS REQUIRED AT ALL MANHOLES. STAINLESS STEEL SEWER GUARDS REQUIRED AT MANHOLES LOCATED IN TRAFFIC AREAS.
2. SERVICES SHALL BE PERPENDICULAR TO MAIN AND TERMINATE AT RIGHT-OF-WAY LINE. SERVICES IN CUL-DE-SACS ARE REQUIRED TO BE PERPENDICULAR, OR MUST ORIGINATE IN MANHOLE AND TERMINATE AT RIGHT-OF-WAY LINE.
3. ALL SERVICES TYING INTO DUCTILE IRON MAINS SHALL BE CONSTRUCTED OF CLASS 50, DIP, WITH PROTECTO 401 CERAMIC EPOXY LINING.
4. MINIMUM 10' UTILITIES EASEMENT PROVIDED ALONG THE FRONTAGE OF ALL LOTS AND AS SHOWN FOR NEW DEVELOPMENTS.
5. NO FLEXIBLE COUPLINGS SHALL BE USED.
6. ALL STAINLESS STEEL FASTENERS SHALL BE 316.

SD-9 STANDARD SEWER NOTES
(REQUIRED ON ALL SEWER PLAN AND PROFILE SHEETS)

GENERAL NOTES:
1. NO EXCAVATED MATERIAL SHALL BE PLACED IN ANY STREAM, DITCH OR DRAINAGE-WAY.
2. THE CONTRACTOR IS RESPONSIBLE FOR LOCATING ALL UNDERGROUND UTILITIES BEFORE ANY CONSTRUCTION BEGINS.
3. THE CONTRACTOR IS RESPONSIBLE FOR TEMPORARY SEDIMENT AND EROSION CONTROL MEASURES WHILE CONSTRUCTION IS IN PROGRESS.
4. THE CONTRACTOR IS RESPONSIBLE FOR STABILIZATION OF ALL DISTURBED AREAS.
5. THE CONTRACTOR IS RESPONSIBLE FOR LAY DOWN AND STOCKPILE AREAS (TO ARRANGE AND ENSURE COMPLIANCE WITH ALL LOCAL AND STATE REGULATIONS).

THE DETAILS SHOWN HEREON SUPERCEDE CFPUA WRITTEN TECHNICAL SPECIFICATIONS VERSIONS 1.00 - 1.04

REV:	DESCRIPTION:	DATE:
1	AIR / VACUUM AND AIR RELEASE COMBINATION VALVE REVISED	10/26/12
2	STANDARD SEWER NOTE #6 REVISED	12/10/12
3	REVISED STANDARD VENT MANHOLE TO EXTEND VENT 2'-0" ABOVE 100 YR FLOOD	11/20/14

CFPUA SANITARY SEWER

STANDARD DETAILS

CAPE FEAR PUBLIC UTILITY AUTHORITY
235 GOVERNMENT CENTER DRIVE
WILMINGTON, NC 28403
OFFICE: (910)332-6560
Stewardship, Sustainability, Service

DATE	1/9/12
SCALE	N/A
DRAWN BY	CFPUA
CHECKED BY	CFPUA
PROJECT NO. :	

SHEET NO: SSD-1

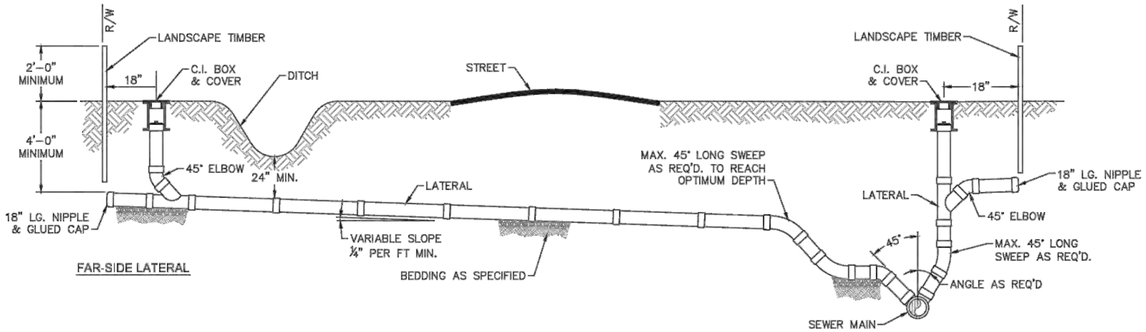

NOTE: FOR PRIVATE 8" SERVICES, MANHOLES ARE REQUIRED FOR TIE-IN TO MAIN

SD-19 STANDARD SERVICE CONNECTION TO SANITARY SEWER

NOT TO SCALE

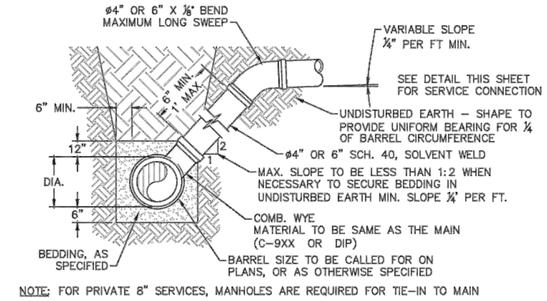

NOTE: FOR PRIVATE 8" SERVICES, MANHOLES ARE REQUIRED FOR TIE-IN TO MAIN

MAIN DEPTH LESS THAN 8 FT

SD-10 STANDARD SERVICE LATERAL

NOT TO SCALE

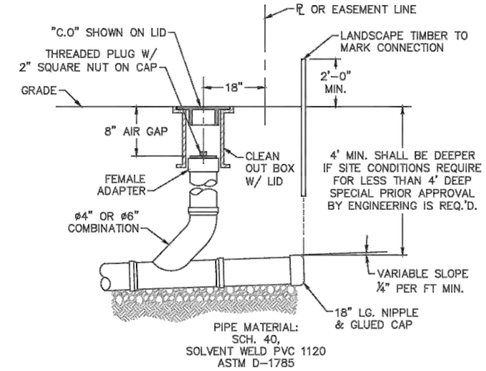

NOTE: FOR PRIVATE 8" SERVICES, MANHOLES ARE REQUIRED FOR TIE-IN TO MAIN

SD-11 SERVICE CONNECTION AND CLEAN-OUT

NOT TO SCALE

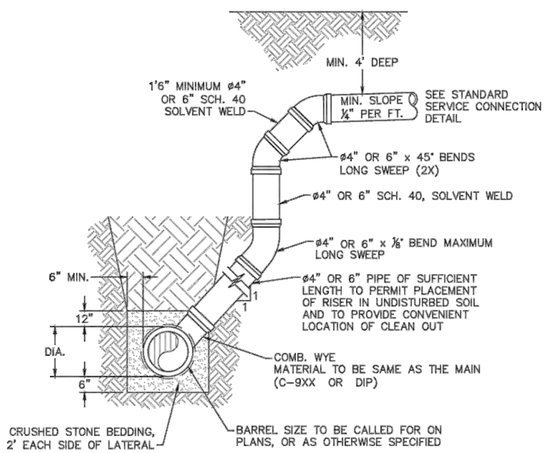

NOTES:
1. SPECIAL CARE SHALL BE TAKEN DURING BACKFILL OPERATIONS. THE RISER SHALL BE PLUMB AND TRUE AT ALL TIMES, AND REST ON FIRM, STABLE FOUNDATION.
2. FOR PRIVATE 8" SERVICES, MANHOLES ARE REQUIRED FOR TIE-IN TO MAIN.

MAIN DEPTH GREATER THAN 8 FT

SD-12 DEEP SERVICE LATERAL

NOT TO SCALE

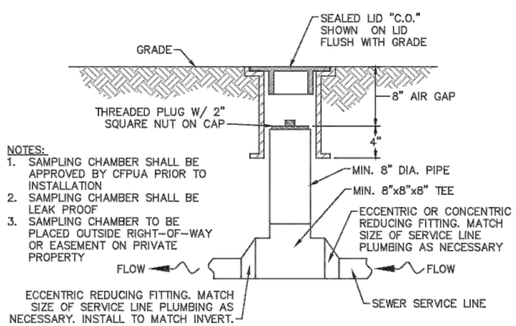

NOTES:
1. SAMPLING CHAMBER SHALL BE APPROVED BY CFPUA PRIOR TO INSTALLATION
2. SAMPLING CHAMBER SHALL BE LEAK PROOF
3. SAMPLING CHAMBER TO BE PLACED OUTSIDE RIGHT-OF-WAY OR EASEMENT ON PRIVATE PROPERTY

SD-13 SAMPLING CHAMBER

NOT TO SCALE

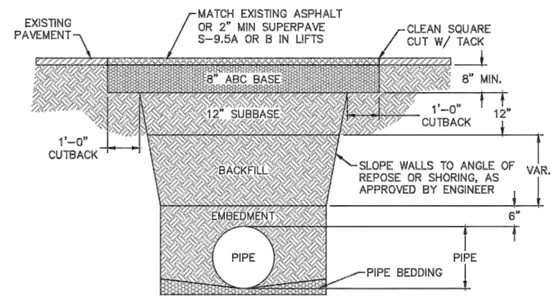

NOTES:
1. BACKFILL SHALL BE SUITABLE MATERIAL THAT IS FREE FROM HEAVY CLAY, GUMBOS, DEBRIS, ORGANICS AND LITTLE TO NO EXCESSIVE MOISTURE.
2. SELECT BACKFILL MAY BE SUBSTITUTED OR REQUIRED BY CITY TO ACHIEVE COMPACTION, (I.E. #57, ABC, CRUSHED LIMESTONE, CLEAN SAND, FLOWABLE FILL, ETC).
3. 8-INCH OF ABC BASE MATERIAL SHALL BE USED ON CITY STREETS.
4. BACKFILL AND BASE MATERIALS SHALL BE COMPACTED 12" MINIMUM LIFTS
5. SOIL SHALL BE COMPACTED BY A MECHANIZED TAMPER (I.E JUMPING JACK), HOWEVER, VIBRATORY ROLLERS > 18" WIDTH MAY BE USED FOR LARGER EXCAVATIONS. THE PLATE TAMP METHOD SHALL NOT BE USED.
6. ALL APPROVED CASTINGS SHALL BE SET FLUSH TO GRADE AND SUPPORTED IF APPLICABLE.
7. ABC BASE AND SUBBASE COMPACTED TO 98% AND BACKFILL AND EMBEDMENT COMPACTED TO 90% AS DETERMINED BY THE MODIFIED PROCTOR AASHTO METHOD T-99.
8. 1-FOOT CUTBACKS OF ASPHALT SHALL BE PREPARED ON UNDISTURBED SOIL. MINIMUM ASPHALT DENSITY IS 90%.

(FOR PRIVATE ROADS AND PAVED AREAS; CONTRACTOR TO MEET MIN. REQUIREMENTS AS DEFINED BY RIGHT-OF-WAY OWNER FOR PUBLIC ROAD REPAIRS)

SD-14 PAVEMENT REPAIR WHERE PIPE INSTALLED

NOT TO SCALE

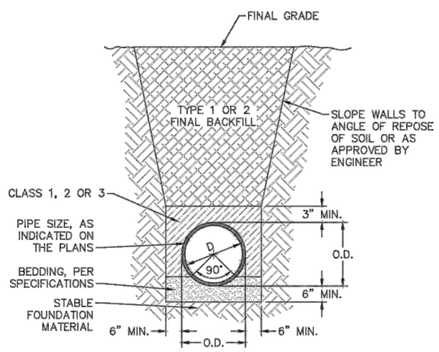

SD-15 TYPICAL TRENCH DETAIL

NOT TO SCALE

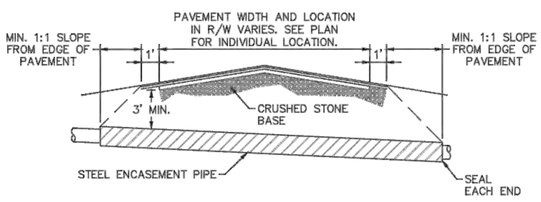

NOTES:
1. CASING WILL BE INSTALLED AT LINE AND GRADE SHOWN ON INDIVIDUAL PROFILE FOR EACH CROSSING. BORING/JACKING TO LINE AND GRADE IS REQUIRED.
2. TRACER WIRE SHALL BE CONTINUED THROUGH CASING.

SD-16 TYPICAL BORING/ JACKING DETAIL

NOT TO SCALE

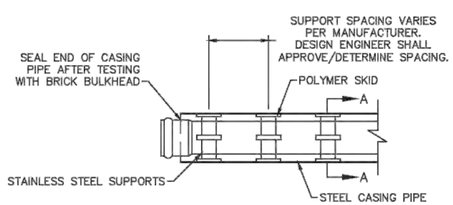

PLAN

NOTE: PIPE SUPPORT TO BE PLACED TO PROVIDE PROPER SUPPORT, ALIGNMENT, AND GRADE AS SPECIFIED. CONTINUOUS SUPPORTS MAY BE USED AS ALTERNATIVE. OIL, GREASE, OR PETROLEUM PRODUCT MAY NOT BE USED AS LUBRICANT.

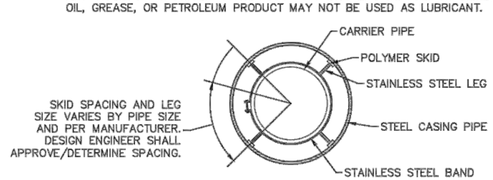

SECTION A-A

SD-17 PIPE CASING SUPPORT DETAIL

NOT TO SCALE

GENERAL NOTES:
1. NO EXCAVATED MATERIAL SHALL BE PLACED IN ANY STREAM, DITCH OR DRAINAGE-WAY.
2. THE CONTRACTOR IS RESPONSIBLE FOR LOCATING ALL UNDERGROUND UTILITIES BEFORE ANY CONSTRUCTION BEGINS.
3. THE CONTRACTOR IS RESPONSIBLE FOR TEMPORARY SEDIMENT AND EROSION CONTROL MEASURES WHILE CONSTRUCTION IS IN PROGRESS.
4. THE CONTRACTOR IS RESPONSIBLE FOR STABILIZATION OF ALL DISTURBED AREAS.
5. THE CONTRACTOR IS RESPONSIBLE FOR LAY DOWN AND STOCKPILE AREAS (TO ARRANGE AND ENSURE COMPLIANCE WITH ALL LOCAL AND STATE REGULATIONS).

THE DETAILS SHOWN HEREON SUPERCEDE CFPUA WRITTEN TECHNICAL SPECIFICATIONS VERSIONS 1.00 - 1.04

REV:	DESCRIPTION:	DATE:
1	SAMPLING CHAMBER REVISED	10/26/12

CFPUA SANITARY SEWER

STANDARD DETAILS

CAPE FEAR PUBLIC UTILITY AUTHORITY
235 GOVERNMENT CENTER DRIVE
WILMINGTON, NC 28403
OFFICE: (910)332-6560
Stewardship. Sustainability. Service.

DATE	1/9/12
SCALE:	N/A
DRAWN BY	CFPUA
CHECKED BY:	CFPUA
PROJECT NO :	
SHEET NO:	SSD-2

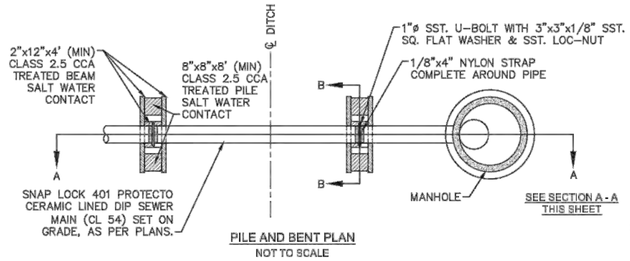

PILE AND BENT PLAN

NOT TO SCALE

NOTES:
1. PILES AND PILE DRIVING SHALL CONFORM TO NCDOT STANDARD SPECIFICATIONS FOR ROADS AND STRUCTURES, JANUARY 2002, SECTIONS 445, 450, 1082-2 & 1084-2.
2. CENTERLINE OF BOLTS TO BE A MINIMUM OF 3" FROM OUTSIDE EDGE OF TIMBER. BOLTS TO BE A MINIMUM OF 3" CENTERLINE TO CENTERLINE.
3. ALL STAINLESS STEEL SHALL BE 316. STAINLESS STRAP TO BE COLD FORMED.
4. PILE SHALL NOT OBSTRUCT FLOW OR CAUSE EROSION OF DITCH/STREAM BANK.
5. MIN. CLASS 54 DIP-ENGINEER MUST DESIGN LOADING.
6. DESIGN SHALL BE APPROVED BY CFPUA.

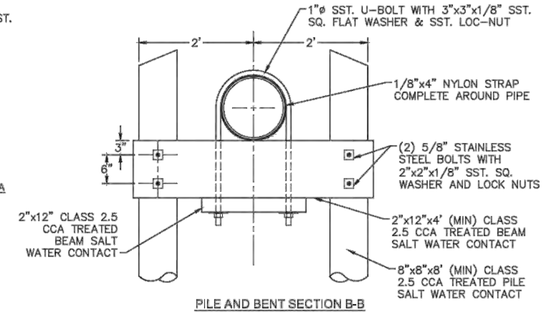

PILE AND BENT SECTION B-B

NOT TO SCALE

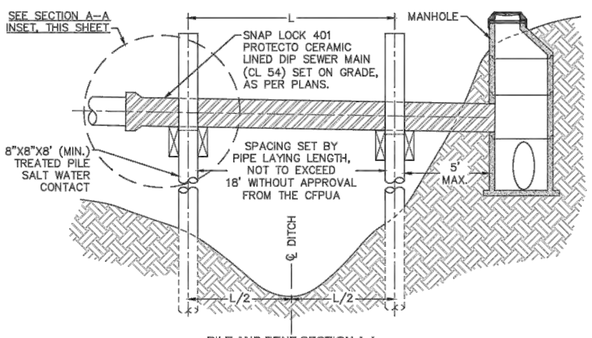

PILE AND BENT SECTION A-A

NOT TO SCALE

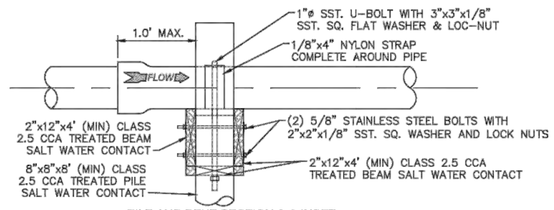

PILE AND BENT SECTION A-A INSET

NOT TO SCALE

SD-20 PILE AND BENT DETAIL

NOT TO SCALE

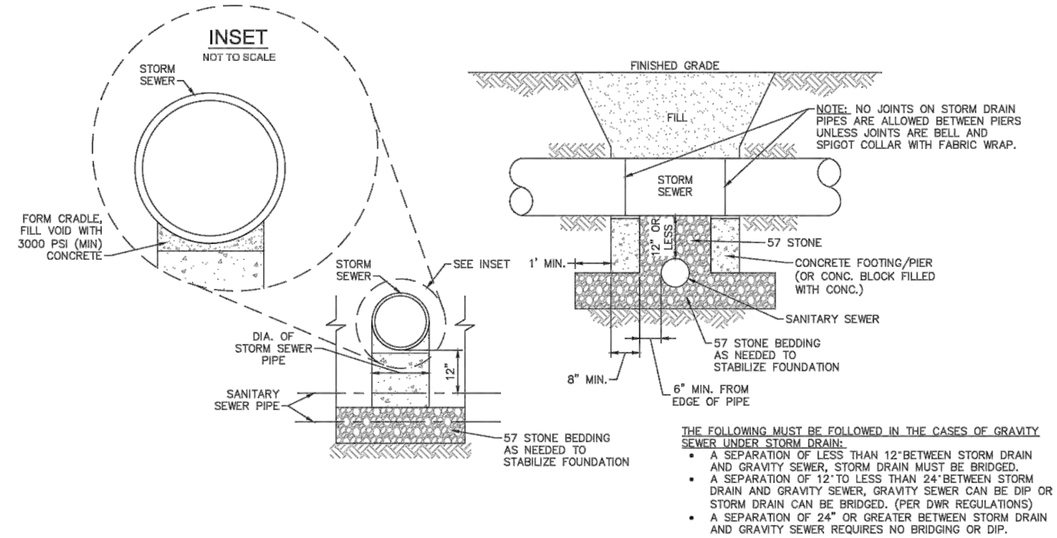

THE FOLLOWING MUST BE FOLLOWED IN THE CASES OF GRAVITY SEWER UNDER STORM DRAIN:
- A SEPARATION OF LESS THAN 12"BETWEEN STORM DRAIN AND GRAVITY SEWER, STORM DRAIN MUST BE BRIDGED.
- A SEPARATION OF 12"TO LESS THAN 24"BETWEEN STORM DRAIN AND GRAVITY SEWER, GRAVITY SEWER CAN BE DIP OR STORM DRAIN CAN BE BRIDGED. (PER DWR REGULATIONS)
- A SEPARATION OF 24" OR GREATER BETWEEN STORM DRAIN AND GRAVITY SEWER REQUIRES NO BRIDGING OR DIP.

SD-24 STRUCTURAL BRIDGING DETAIL FOR STORMWATER OVER GRAVITY SEWER INSTALLATIONS WITH LESS THAN 12" SEPARATION

NOT TO SCALE

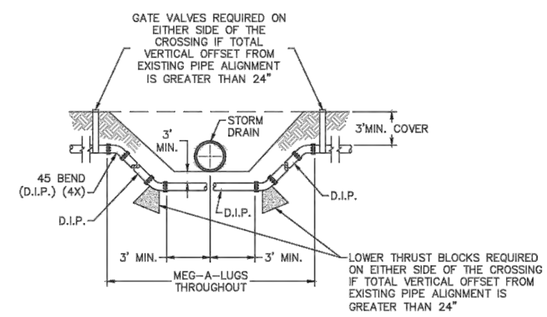

NOTE: USE D.I.P. (CL50 OR BETTER)

SD-18 FORCE MAIN DITCH AND STORM DRAIN CROSSING

NOT TO SCALE

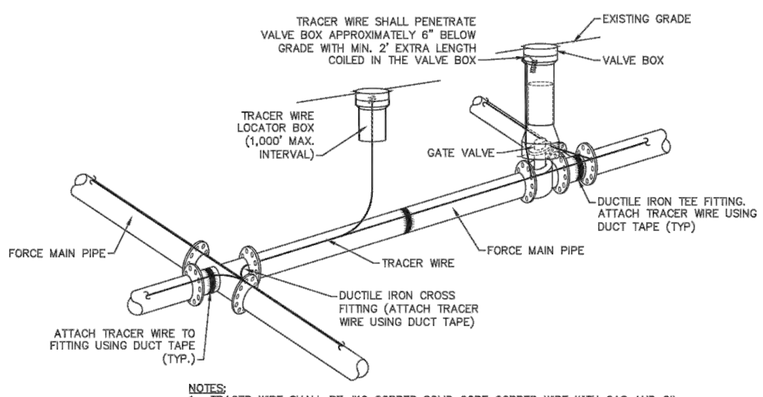

NOTES:
1. TRACER WIRE SHALL BE #10 COPPER SOLID CORE COPPER WIRE WITH GAS AND OIL RESISTANT INSULATION.
2. WIRE SHALL BE STRAPPED TO ALL PVC FORCE MAIN PIPING WITH DUCT TAPE AT 12 FOOT INTERVALS ALONG THE PIPE.
3. SECURE WIRE TO ALL TEE AND CROSS FITTINGS WITH DUCT TAPE.
4. ALL SPLICES IN THE WIRE SHALL BE MADE WITH 3M DBR DIRECT BURY SPLICE KIT AN UNDERGROUND RATED, WATERTIGHT, AND APPROVED SPLICE CONNECTOR OR APPROVED EQUAL.

SD-21 TRACER WIRE DETAIL

NOT TO SCALE

GENERAL NOTES:
1. NO EXCAVATED MATERIAL SHALL BE PLACED IN ANY STREAM, DITCH OR DRAINAGE-WAY.
2. THE CONTRACTOR IS RESPONSIBLE FOR LOCATING ALL UNDERGROUND UTILITIES BEFORE ANY CONSTRUCTION BEGINS.
3. THE CONTRACTOR IS RESPONSIBLE FOR TEMPORARY SEDIMENT AND EROSION CONTROL MEASURES WHILE CONSTRUCTION IS IN PROGRESS.
4. THE CONTRACTOR IS RESPONSIBLE FOR STABILIZATION OF ALL DISTURBED AREAS.
5. THE CONTRACTOR IS RESPONSIBLE FOR LAY DOWN AND STOCKPILE AREAS (TO ARRANGE AND ENSURE COMPLIANCE WITH ALL LOCAL AND STATE REGULATIONS).

THE DETAILS SHOWN HEREON SUPERCEDE CFPUA WRITTEN TECHNICAL SPECIFICATIONS VERSIONS 1.00 - 1.04

REV:	DESCRIPTION:	DATE:
1	ADDED NOTES TO THE STRUCTURAL BRIDGING DETAIL	03/11/15
2	Revised Tracer Wire Detail	10/20/15

CFPUA SANITARY SEWER

STANDARD DETAILS

CAPE FEAR PUBLIC UTILITY AUTHORITY
235 GOVERNMENT CENTER DRIVE
WILMINGTON, NC 28403
OFFICE: (910)332-6560

Stewardship. Sustainability. Service.

DATE	1/9/12
SCALE	N/A
DRAWN BY	CFPUA
CHECKED BY	CFPUA
PROJECT NO. :	

SHEET NO: SSD-3

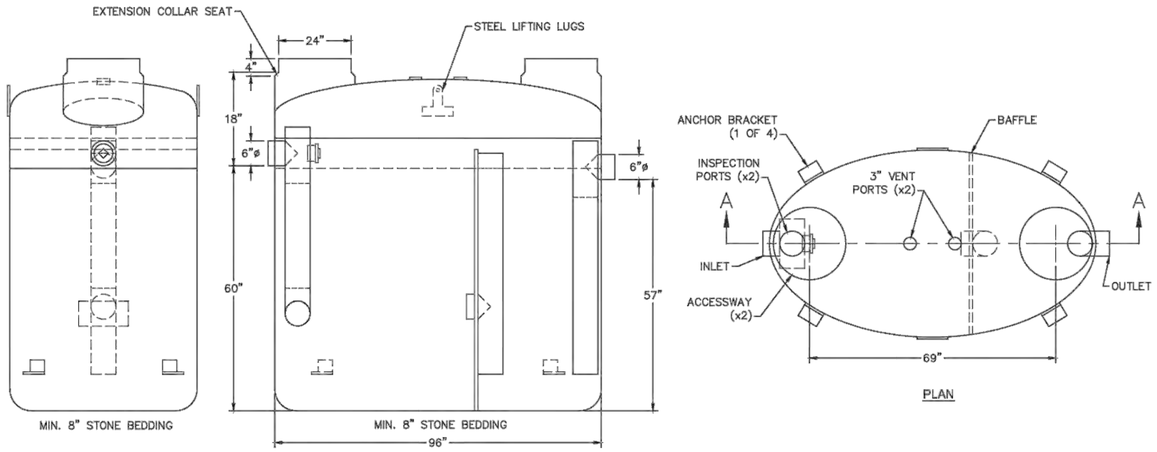

NOTES:
1. FOR GRAVITY APPLICATIONS ONLY.
2. MIN. THICKNESS: 1/4" WALL AND 3/8" TOP AND BOTTOM BOWLS.
3. STANDARD PIPE STUBS ARE SOCKET SDR 35 PVC.
4. EXTENSION COLLARS SHALL BE CAULKED WITH SIKAFLEX OR EQUIVALENT FOR WATERTIGHT SEAL.
5. FOLLOW MANUFACTURE'S SPECS FOR TRAFFIC OR PEDESTRIAN LOADING.

SD-22 FIBERGLASS GREASE INTERCEPTOR

NOT TO SCALE

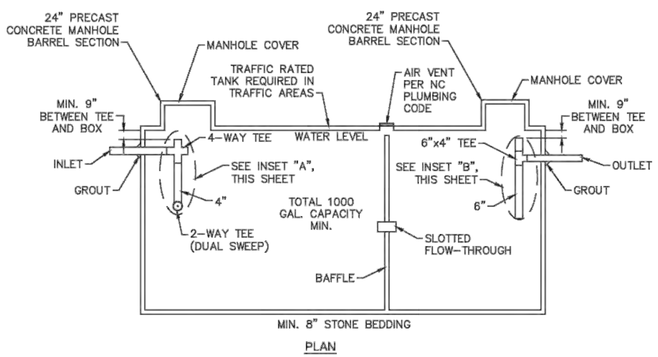

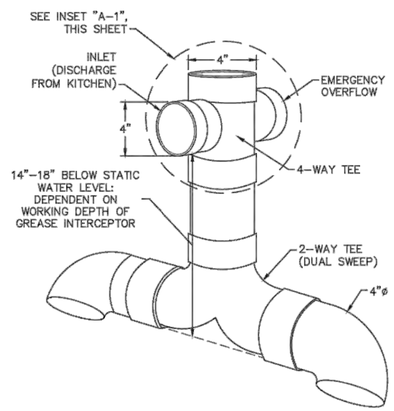

GREASE INTERCEPTOR INSET "A"
4" SANITARY TEE

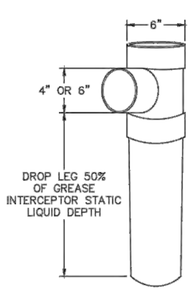

GREASE INTERCEPTOR INSET "B"
6" x 6" x 4" OUTLET
SANITARY TEE

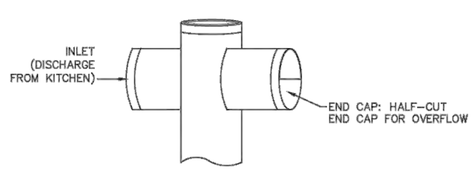

GREASE INTERCEPTOR INSET "A-1"
EMERGENCY OVERFLOW CLOSE-UP

SD-23 CONCRETE GREASE INTERCEPTOR

NOT TO SCALE

GENERAL NOTES:
1. NO EXCAVATED MATERIAL SHALL BE PLACED IN ANY STREAM, DITCH OR DRAINAGE-WAY.
2. THE CONTRACTOR IS RESPONSIBLE FOR LOCATING ALL UNDERGROUND UTILITIES BEFORE ANY CONSTRUCTION BEGINS.
3. THE CONTRACTOR IS RESPONSIBLE FOR TEMPORARY SEDIMENT AND EROSION CONTROL MEASURES WHILE CONSTRUCTION IS IN PROGRESS.
4. THE CONTRACTOR IS RESPONSIBLE FOR STABILIZATION OF ALL DISTURBED AREAS.
5. THE CONTRACTOR IS RESPONSIBLE FOR LAY DOWN AND STOCKPILE AREAS (TO ARRANGE AND ENSURE COMPLIANCE WITH ALL LOCAL AND STATE REGULATIONS).

THE DETAILS SHOWN HEREON SUPERCEDE CFPUA WRITTEN TECHNICAL SPECIFICATIONS VERSIONS 1.00 - 1.04

REV:	DESCRIPTION:	DATE:

CFPUA SANITARY SEWER

STANDARD DETAILS

CAPE FEAR PUBLIC UTILITY AUTHORITY
235 GOVERNMENT CENTER DRIVE
WILMINGTON, NC 28403
OFFICE: (910)332-6560
Stewardship. Sustainability. Service.

DATE 1/9/12
SCALE: N/A
DRAWN BY CFPUA
CHECKED BY: CFPUA
PROJECT NO :

SHEET NO: SSD-4

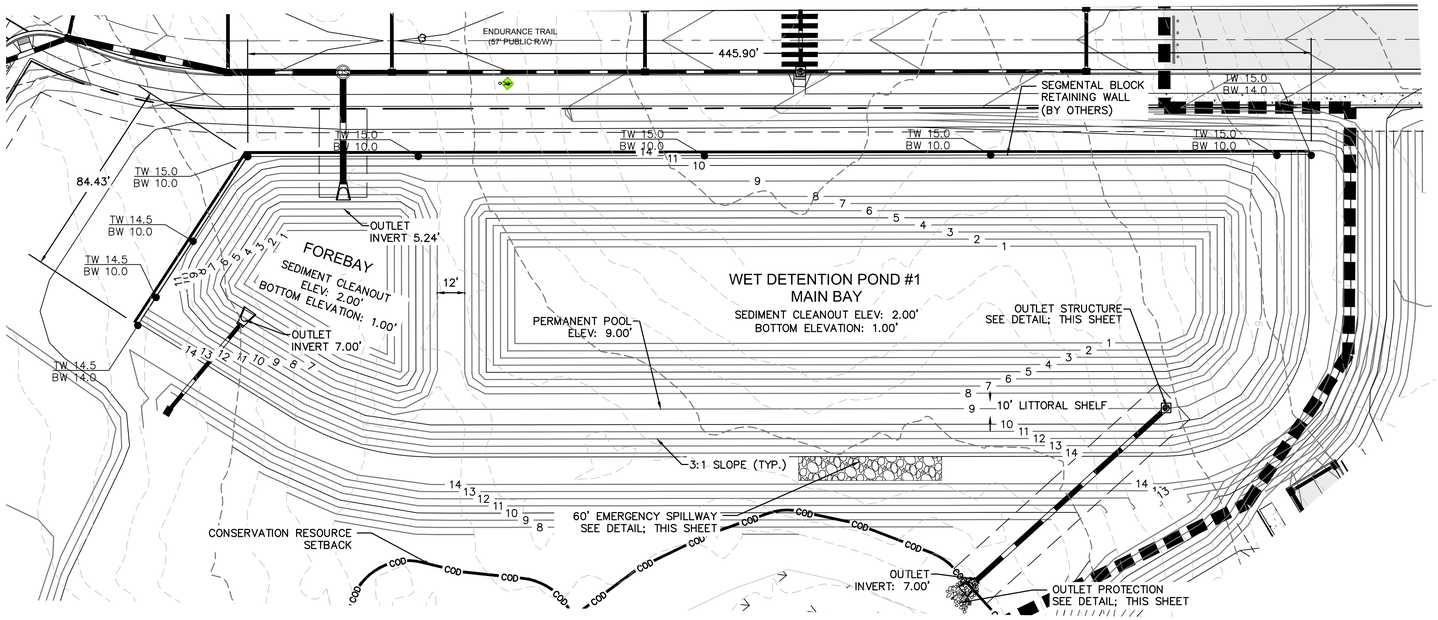

N

30' 0 30' 60'
SCALE: 1"=30' (Horiz.)

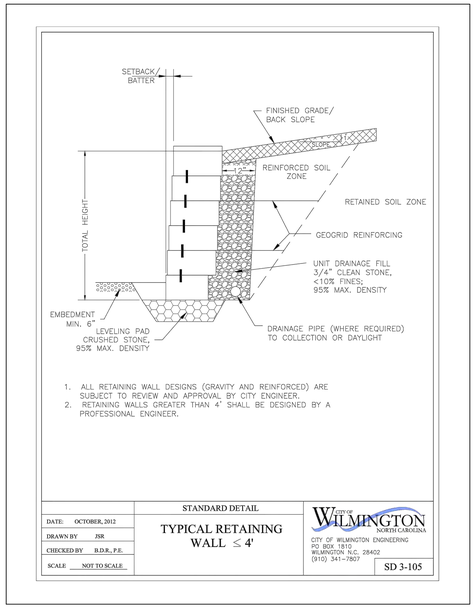

1. ALL RETAINING WALL DESIGNS (GRAVITY AND REINFORCED) ARE SUBJECT TO REVIEW AND APPROVAL BY CITY ENGINEER.
2. RETAINING WALLS GREATER THAN 4' SHALL BE DESIGNED BY A PROFESSIONAL ENGINEER.

DATE: OCTOBER, 2012	STANDARD DETAIL	CITY OF WILMINGTON NORTH CAROLINA
DRAWN BY JSR	TYPICAL RETAINING WALL ≤ 4'	CITY OF WILMINGTON ENGINEERING PO BOX 1810 WILMINGTON N.C. 28402 (910) 341-7807
CHECKED BY B.D.R., P.E.		
SCALE NOT TO SCALE		SD 3-105

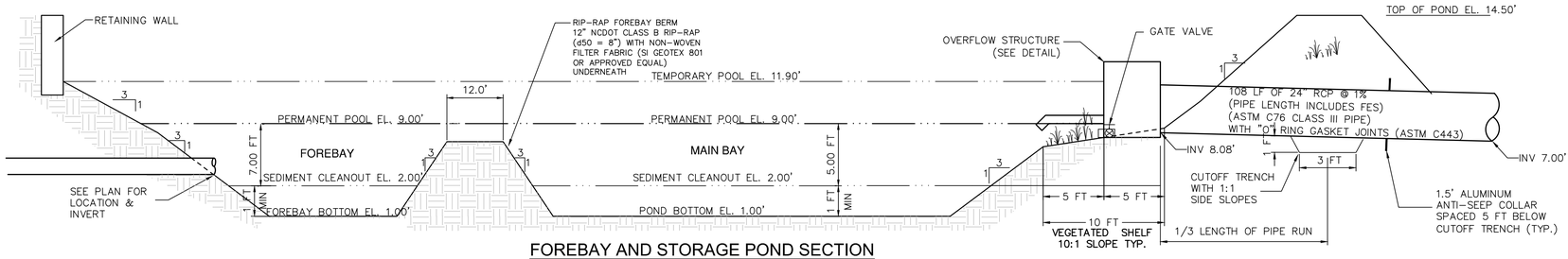

FOREBAY AND STORAGE POND SECTION
NOT TO SCALE

WET DETENTION POND NOTES

1) TEMPORARY PUMP WILL BE PROVIDED BY OWNER TO DRAIN POND/FOREBAY FOR ROUTINE MAINTENANCE OR IN AN EMERGENCY.

2) SOD SLOPES ABOVE THE PERMANENT POOL AROUND THE INSIDE OF THE FOREBAY, ABOVE THE VEGETATED SHELF AROUND THE MAIN BAY AND SLOPES OUTSIDE OF THE POND.

3) CONTRACTOR SHALL EXCAVATE VEGETATED SHELF AS NECESSARY TO PROVIDE ADEQUATE CLEARANCE AROUND RISER FOR PVC PIPE INVERT.

4) THE SEASONAL HIGH WATER TABLE WAS FOUND TO BE ~ EL. 9.35 IN THE MAIN BAY OF THE WET DETENTION POND.

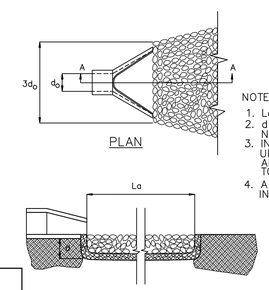

NOTES:
1. La IS THE LENGTH OF THE RIPRAP APRON.
2. d = 1.5 TIMES THE MAXIMUM STONE DIAMETER BUT NOT LESS THAN 6".
3. IN A WELL – DEFINED CHANNEL EXTEND THE APRON UP THE CHANNEL BANKS TO AN ELEVATION OF 6" ABOVE THE MAXIMUM TAILWATER DEPTH OR TO THE TOP OF THE BANK, WHICHEVER IS LESS.
4. A FILTER BLANKET OR FILTER FABRIC SHOULD BE INSTALLED BETWEEN THE RIPRAP AND SOIL FOUNDATION.

GENERAL NOTES

1. CONTRACTOR SHALL VERIFY LOCATIONS OF EXISTING UTILITIES.
2. THE IMPROVEMENTS SHOWN ON THIS SITE PLAN CANNOT DEVIATE FROM THE PLAN ONCE APPROVED WITHOUT WRITTEN APPROVAL OF ENGINEER.
3. SITE WILL REQUIRE A COUNTY EROSION CONTROL PERMIT AND STATE STORMWATER PERMIT.
4. IMPERVIOUS AREA SHALL DRAIN TO PROPOSED CITY PERMITTED STORMWATER POND.

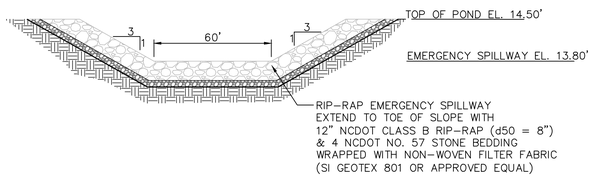

EMERGENCY SPILLWAY SECTION
NOT TO SCALE

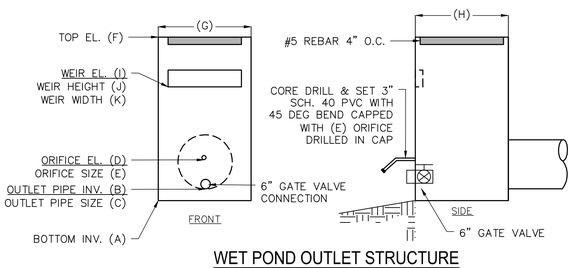

WET POND OUTLET STRUCTURE
NOT TO SCALE

WET POND OUTLET STRUCTURE	
	WET POND 1
A	7.00'
B	8.08'
C	24"
D	9.00'
E	3"
F	13.50'
G	6'
H	6'
I	11.90'
J	6"
K	12"

OUTLET PROTECTION	
OUTLET PIPE DIA.	24"
OUTLET FLOW RATE	3.80 CFS
OUTLET VELOCITY	5.22 FT/S
MATERIAL	CLASS A
LENGTH	8'
WIDTH	6'
STONE DIA.	3"
THICKNESS	9"

PIPE OUTLET PROTECTION
NOT TO SCALE

REV.NO.	DESCRIPTIONS	DATE
E	CITY OF WILMINGTON TRC / STORMWATER / CFPUA RE-SUBMITTAL	01/22/2016
D	CITY OF WILMINGTON TRC RE-SUBMITTAL	11/12/2015
C	CITY OF WILMINGTON TRC / STORMWATER / TREE REMOVAL, NEW HANOVER COUNTY EROSION CONTROL AND CFPUA SUBMITTAL	09/16/2015
B	CITY OF WILMINGTON SRB MYLARS	07/27/2015
A	CITY OF WILMINGTON TRC CONCEPT SUBMITTAL	05/06/2015

REVISIONS

SEAL

FINAL DRAWINGS - FOR REVIEW PURPOSES ONLY

SEAL

McKIM&CREED
243 North Front Street
Wilmington, North Carolina 28401
Phone: (910)343-1048, Fax: (910)251-8282
License: F-1222
www.mckimcreed.com

NASH — NORTH AMERICA SEKISUI HOUSE, LLC

RIVERLIGHTS™ by Newland COMMUNITIES

RIVERLIGHTS CONVENTIONAL NEIGHBORHOOD PHASE II

STORMWATER MANAGEMENT DETAILS

DATE:	05/06/2015
MCE PROJ. #	02735-0141
DRAWN	TCM/EEM
DESIGNED	KCBE
CHECKED	NJL
PROJ. MGR.	RMC

SCALE
HORIZONTAL: 1"=100'
VERTICAL: N/A

M&C FILE NUMBER CN-501
DRAWING NUMBER 35

STATUS: FINAL DESIGN
ISSUED FOR PERMITTING
REVISION E

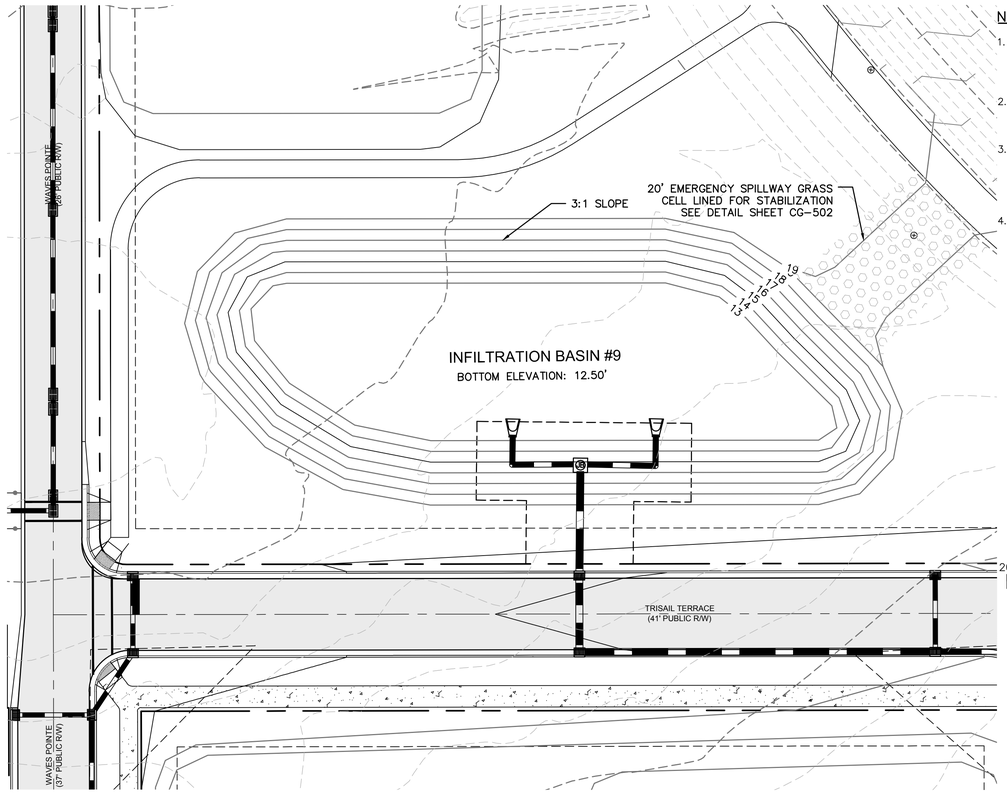

NOTES

1. THE ENTIRE INFILTRATION BASIN SHALL BE SEEDED PER THE SEEDING SCHEDULE IMMEDIATELY FOLLOWING THE COMPLETION OF CONSTRUCTION.
2. THE BOTTOM SHALL BE OVEREXCAVATED 4" AND BACKFILLED WITH CLEAN SAND TO THE BOTTOM ELEVATION SPECIFIED.
3. IF HARDPAN OR OTHER UNSUITABLE SOILS ARE ENCOUNTERED, OVEREXCAVATE THE BOTTOM A MINIMUM OF 2' AND BACKFILL WITH ENGINEER APPROVED SANDY SOIL MATERIAL.
4. IF THE BASIN IS USED AS AN EROSION CONTROL DEVICE, THE BOTTOM MUST BE COMPLETELY CLEANED OUT, OVEREXCAVED 6" AND BACKFILLED WITH AN ENGINEER APPROVED SANDY SOIL MATERIAL.

N

20' 0 20' 40'
SCALE: 1"=40' (Horiz.)

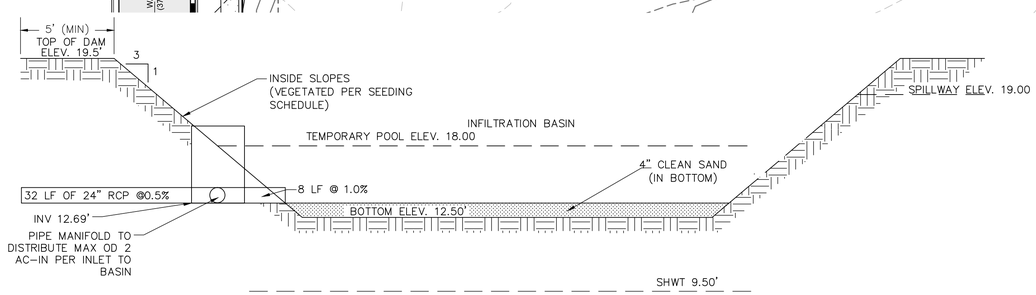

INFILTRATION BASIN

NOT TO SCALE

20' 0 20' 40'
SCALE: 1"=20' (Horiz.)

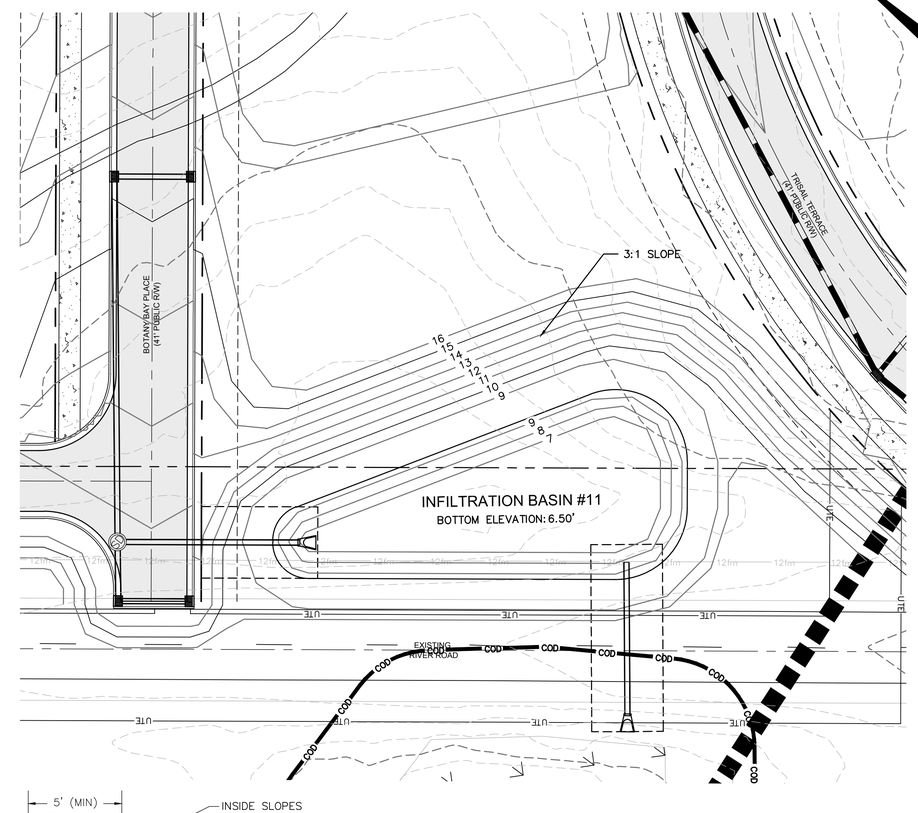

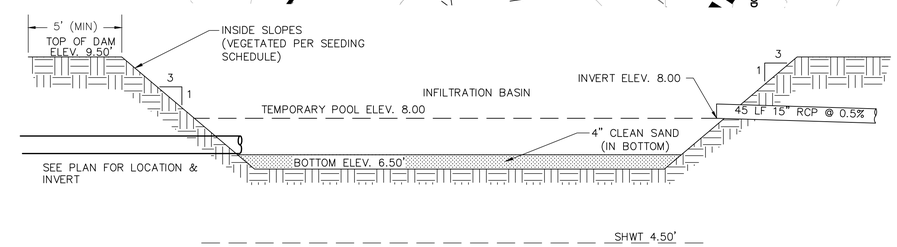

INFILTRATION BASIN

NOT TO SCALE

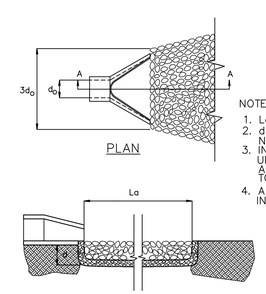

NOTES:

1. La IS THE LENGTH OF THE RIPRAP APRON.
2. d = 1.5 TIMES THE MAXIMUM STONE DIAMETER BUT NOT LESS THAN 6".
3. IN A WELL – DEFINED CHANNEL EXTEND THE APRON UP THE CHANNEL BANKS TO AN ELEVATION OF 6" ABOVE THE MAXIMUM TAILWATER DEPTH OR TO THE TOP OF THE BANK, WHICHEVER IS LESS.
4. A FILTER BLANKET OR FILTER FABRIC SHOULD BE INSTALLED BETWEEN THE RIPRAP AND SOIL FOUNDATION.

OUTLET PROTECTION	
OUTLET PIPE DIA.	15"
OUTLET FLOW RATE	0.10 CFS
OUTLET VELOCITY	1.46 FT/S
MATERIAL	CLASS A
LENGTH	5'
WIDTH	3.8'
STONE DIA.	3"
THICKNESS	9"

PIPE OUTLET PROTECTION

NOT TO SCALE

REV.NO.	DESCRIPTIONS	DATE
E	CITY OF WILMINGTON TRC / STORMWATER / CFPUA RE-SUBMITTAL	01/22/2016
D	CITY OF WILMINGTON TRC RE-SUBMITTAL	11/12/2015
C	CITY OF WILMINGTON TRC / STORMWATER / TREE REMOVAL, NEW HANOVER COUNTY EROSION CONTROL AND CFPUA SUBMITTAL	09/16/2015
B	CITY OF WILMINGTON SRB MYLARS	07/27/2015
A	CITY OF WILMINGTON TRC CONCEPT SUBMITTAL	05/06/2015

REVISIONS

FINAL DRAWINGS - FOR REVIEW PURPOSES ONLY

SEAL

SEAL

McKIM&CREED
243 North Front Street
Wilmington, North Carolina 28401
Phone: (910)343-1048, Fax: (910)251-8282
License: F-1222
www.mckimcreed.com

NASH NORTH AMERICA SEKISUI HOUSE, LLC

RIVERLIGHTS by Newland COMMUNITIES

RIVERLIGHTS CONVENTIONAL NEIGHBORHOOD PHASE II

STORMWATER MANAGEMENT DETAILS

DATE:	05/06/2015
MCE PROJ. #	02735-0141
DRAWN	TCM/EEM
DESIGNED	KCBE
CHECKED	NJL
PROJ. MGR.	RMC

SCALE
HORIZONTAL: 1"=100'
VERTICAL: N/A

M&C FILE NUMBER CN-502
DRAWING NUMBER 36

STATUS: FINAL DESIGN
ISSUED FOR PERMITTING
REVISION E

WET DETENTION POND NOTES

1) TEMPORARY PUMP WILL BE PROVIDED BY OWNER TO DRAIN POND/FOREBAY FOR ROUTINE MAINTENANCE OR IN AN EMERGENCY.

2) SOD SLOPES ABOVE THE PERMANENT POOL AROUND THE INSIDE OF THE FOREBAY, ABOVE THE VEGETATED SHELF AROUND THE MAIN BAY AND SLOPES OUTSIDE OF THE POND.

3) CONTRACTOR SHALL EXCAVATE VEGETATED SHELF AS NECESSARY TO PROVIDE ADEQUATE CLEARANCE AROUND RISER FOR PVC PIPE INVERT.

4) THE SEASONAL HIGH WATER TABLE WAS FOUND TO BE ~ EL. 7.60 IN THE MAIN BAY OF THE WET DETENTION POND.

GENERAL NOTES

1. CONTRACTOR SHALL VERIFY LOCATIONS OF EXISTING UTILITIES.
2. THE IMPROVEMENTS SHOWN ON THIS SITE PLAN CANNOT DEVIATE FROM THE PLAN ONCE APPROVED WITHOUT WRITTEN APPROVAL OF ENGINEER.
3. SITE WILL REQUIRE A STATE EROSION CONTROL PERMIT AND STATE STORMWATER PERMIT.
4. IMPERVIOUS AREA SHALL DRAIN TO PROPOSED STATE PERMITTED STORMWATER POND.

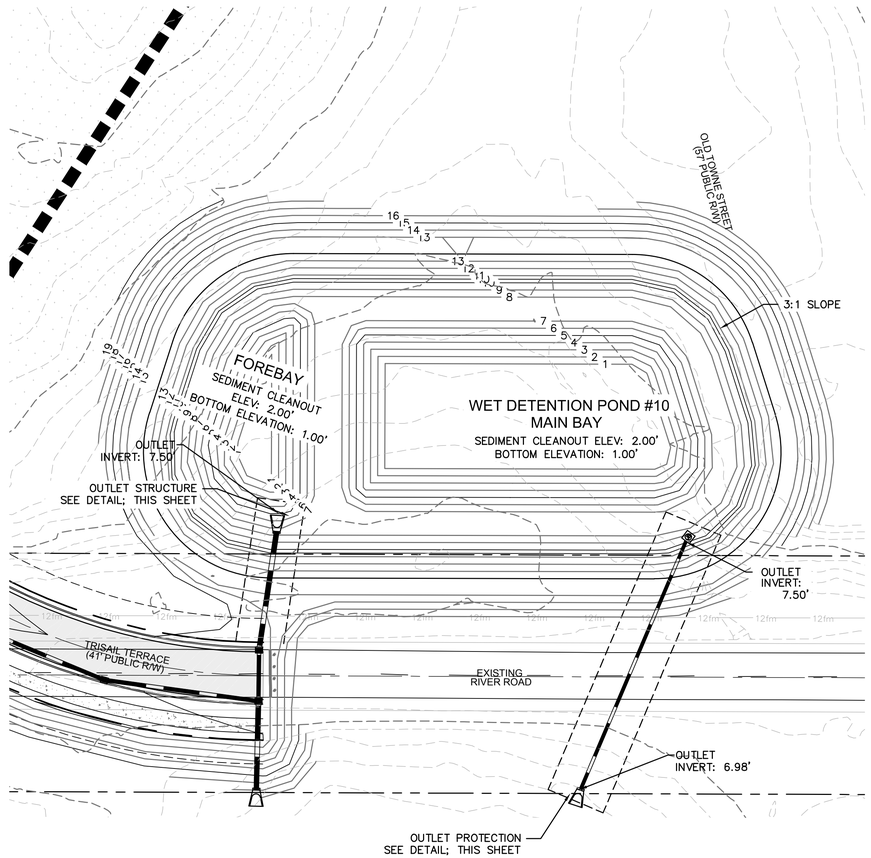

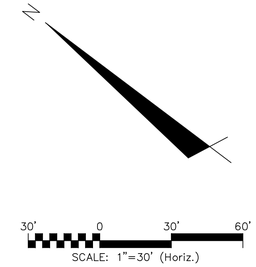

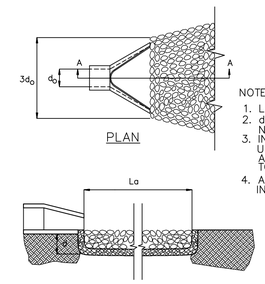

NOTES:
1. La IS THE LENGTH OF THE RIPRAP APRON.
2. d = 1.5 TIMES THE MAXIMUM STONE DIAMETER BUT NOT LESS THAN 6".
3. IN A WELL – DEFINED CHANNEL EXTEND THE APRON UP THE CHANNEL BANKS TO AN ELEVATION OF 6" ABOVE THE MAXIMUM TAILWATER DEPTH OR TO THE TOP OF THE BANK, WHICHEVER IS LESS.
4. A FILTER BLANKET OR FILTER FABRIC SHOULD BE INSTALLED BETWEEN THE RIPRAP AND SOIL FOUNDATION.

OUTLET PROTECTION	
OUTLET PIPE DIA.	15"
OUTLET FLOW RATE	2.08 CFS
OUTLET VELOCITY	3.55 FT/S
MATERIAL	CLASS A
LENGTH	5'
WIDTH	3.8'
STONE DIA.	3"
THICKNESS	9"

PIPE OUTLET PROTECTION
NOT TO SCALE

WET POND OUTLET STRUCTURE	
	WET POND 1
A	7.50'
B	7.50'
C	15"
D	7.50'
E	2.0"
F	10.7'
G	4'
H	4'
I	9.7'
J	6"
K	12"

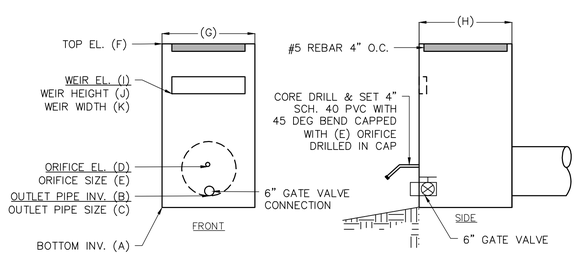

WET POND OUTLET STRUCTURE
NOT TO SCALE

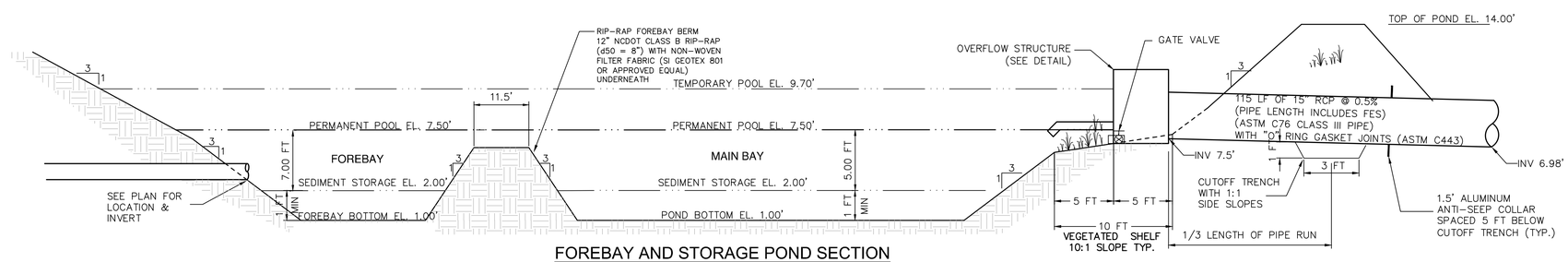

FOREBAY AND STORAGE POND SECTION
NOT TO SCALE

REV.NO.	DESCRIPTIONS	DATE
E	CITY OF WILMINGTON TRC / STORMWATER / CFPUA RE-SUBMITTAL	01/22/2016
D	CITY OF WILMINGTON TRC RE-SUBMITTAL	11/12/2015
C	CITY OF WILMINGTON TRC / STORMWATER / TREE REMOVAL, NEW HANOVER COUNTY EROSION CONTROL AND CFPUA SUBMITTAL	09/16/2015
B	CITY OF WILMINGTON SRB MYLARS	07/27/2015
A	CITY OF WILMINGTON TRC CONCEPT SUBMITTAL	05/06/2015

REVISIONS

SEAL

FINAL DRAWINGS - FOR REVIEW PURPOSES ONLY

SEAL

McKIM&CREED
243 North Front Street
Wilmington, North Carolina 28401
Phone: (910)343-1048, Fax: (910)251-8282
License: F-1222
www.mckimcreed.com

NASH — NORTH AMERICA SEKISUI HOUSE, LLC

RIVERLIGHTS™ by Newland COMMUNITIES

RIVERLIGHTS CONVENTIONAL NEIGHBORHOOD PHASE II

STORMWATER MANAGEMENT DETAILS

DATE:	05/06/2015
MCE PROJ. #	02735-0141
DRAWN	TCM/EEM
DESIGNED	KCBE
CHECKED	NJL
PROJ. MGR.	RMC

SCALE
HORIZONTAL: 1"=100'
VERTICAL: N/A

M&C FILE NUMBER CN-503
DRAWING NUMBER 37

STATUS: FINAL DESIGN
ISSUED FOR PERMITTING
REVISION E

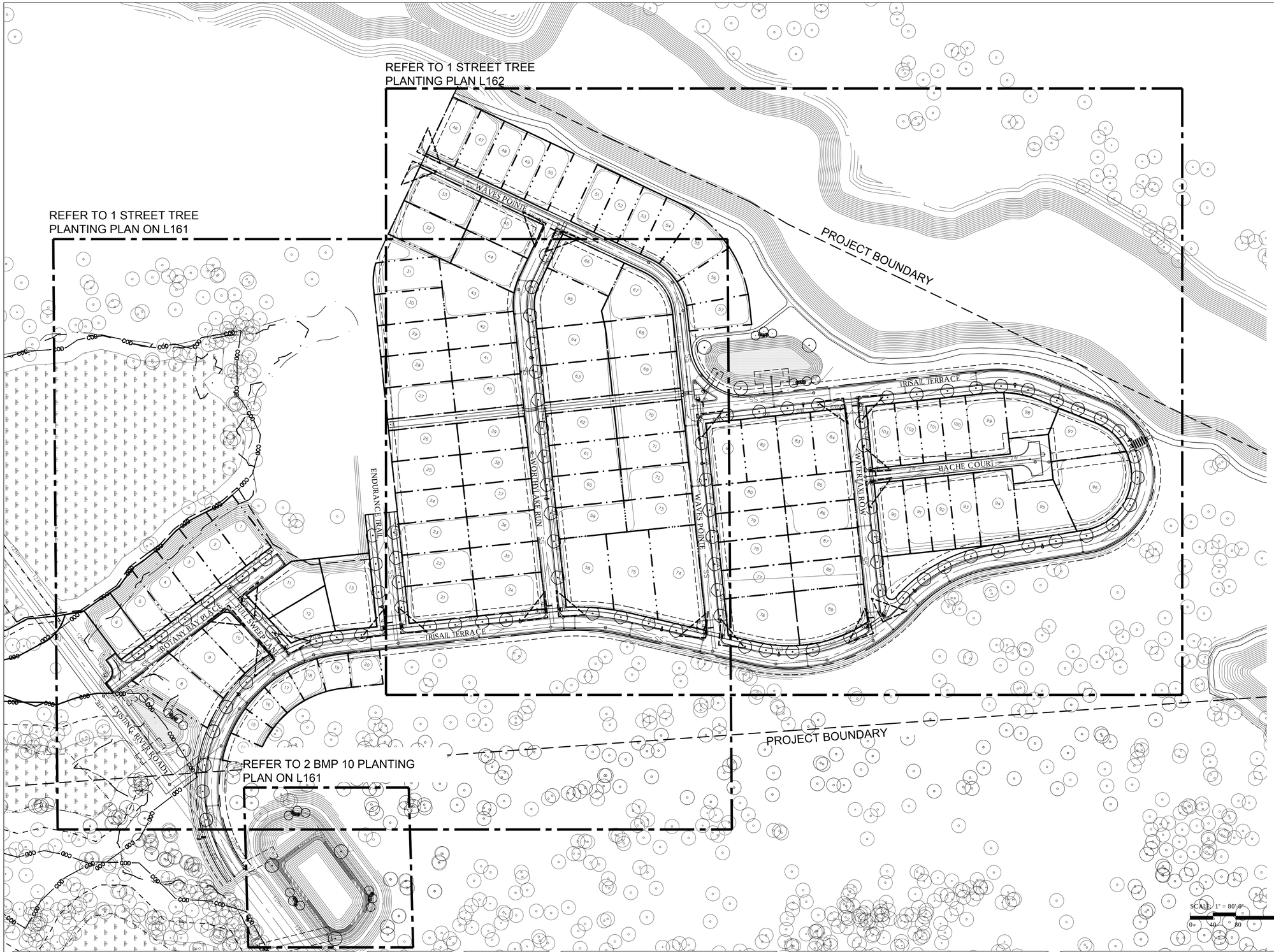

PLANTING NOTES

1. EXISTING UTILITIES SHOWN ARE APPROXIMATE AND SHALL BE VERIFIED IN THE FIELD PRIOR TO BEGINNING WORK. CONTRACTOR SHALL CONTACT THE CITY OF WILMINGTON FOR LOCATION OF EXISTING UTILITIES PRIOR TO BEGINNING CONSTRUCTION. THE CONTRACTOR SHALL EXERCISE CAUTION WHEN WORKING AROUND EXISTING UTILITIES TO REMAIN.
2. PLANT LIST IS PROVIDED FOR CONVENIENCE ONLY. IN THE CASE OF DISCREPANCIES BETWEEN THE PLAN AND PLANT LIST QUANTITIES, THE PLAN SHALL TAKE PRECEDENCE.
3. AFTER THE SITE IS STABILIZED AND FREE OF SEDIMENTATION, THE CONTRACTOR SHALL REMOVE ALL TEMPORARY EROSION CONTROL DEVICES, SILT, RIP RAP AND TEMPORARY STONE STAGING AREAS FOR REPLACEMENT WITH PLANTING SOIL. PROVIDE PLANTING ACCORDING TO THE LANDSCAPE PLAN.
4. TEMPORARY EROSION CONTROL SEED MUST BE FULLY REMOVED PRIOR TO PREPARATION OF PERMANENT SEED, SOD OR LANDSCAPE BEDS.
5. UNLESS OTHERWISE NOTED IN THE PLANT LIST, THE CONTRACTOR SHALL OBTAIN AND INSTALL ONLY PLANT MATERIAL THAT IS GROWN ON ITS OWN ROOT - GRAFTED OR BUDDED PLANT MATERIAL WILL BE REJECTED.
6. ALL TREES SHALL BE OBTAINED FROM THE NURSERY WITH EXPOSED ROOT CROWNS. B&B MATERIAL DELIVERED TO SITE WITH BURIED OR RECENTLY BURIED ROOT CROWNS WILL BE REJECTED.
7. CONTRACTOR SHALL NOTIFY LANDSCAPE ARCHITECT OF PLANT SUBSTITUTIONS IN ANY MEASUREMENT OR SPECIES INDICATED.
8. DO NOT PLANT IN STORM WATER CONVEYANCE SWALES OR PROVIDE FINE GRADING THAT DISRUPTS FLOW OR CHANGES LONGITUDINAL SLOPES.
9. PLANT THE OUTER EDGES OF EACH PLANTING GROUP FOLLOWING THE BED OUTLINE ACCORDING TO THE PLAN. ONCE A SATISFACTORY MATCHED OUTER SHAPE IS OBTAINED, FILL THE CENTER OF EACH AREA WITH PLANTS ACCORDING TO THE PLAN AND SPACING NOTES.
10. THE PLANTING LAYOUT WITHIN PLANTING BEDS SHOULD BE SHIFTED TO MINIMIZE CONFLICTS WITH EXISTING TREE ROOTS.
11. THE CONTRACTOR SHALL SEED ALL DISTURBED AREAS INCLUDING CONSTRUCTION ACCESS OUTSIDE PROJECT LIMITS.

1 inch

For each open utility cut of City streets, a $325 permit shall be required from the City prior to occupancy and/or project acceptance.

Approved Construction Plan

	Name	Date
Planning		
Traffic		
Fire		

CITY OF WILMINGTON NORTH CAROLINA
Public Services • Engineering Division
APPROVED STORMWATER MANAGEMENT PLAN
Date:_____ Permit #_____
Signed: _____

REV.NO.	DESCRIPTIONS	DATE
	TRC RE-SUBMITTAL	01/19/2016
	TRC RE-SUBMITTAL	09/16/2015
	CITY OF WILMINGTON TRC SUBMITTAL	09/16/2015

REVISIONS

SEAL: NORTH CAROLINA PROFESSIONAL ENGINEER SEAL 028678 — FINAL DRAWINGS DO NOT USE FOR CONSTRUCTION

SEAL: NORTH CAROLINA PROFESSIONAL LANDSCAPE ARCHITECT SEAL 2186 — FINAL DRAWINGS DO NOT USE FOR CONSTRUCTION

McKIM&CREED
License: F-1222
www.mckimcreed.com

NASH — North America Seksui House, LLC
RIVERLIGHTS by Newland COMMUNITIES
Surface
Surface 678, P.A.
215 Morris Street, Suite 150
Durham, NC 27701
www.surface678.com
p: 919-419-1199
f: 919-419-1669

RIVERLIGHTS-
CONVENTIONAL SF-2

OVERALL SHEET
REFERENCE PLAN

DATE:	09/02/2015
MCE PROJ. #	
DRAWN	JI
DESIGNED	JC, ED
CHECKED	JC, ED
PROJ. MGR.	JC

SCALE: AS SHOWN

M&C FILE NUMBER

DRAWING NUMBER: L160

STATUS: FINAL DESIGN

REVISION

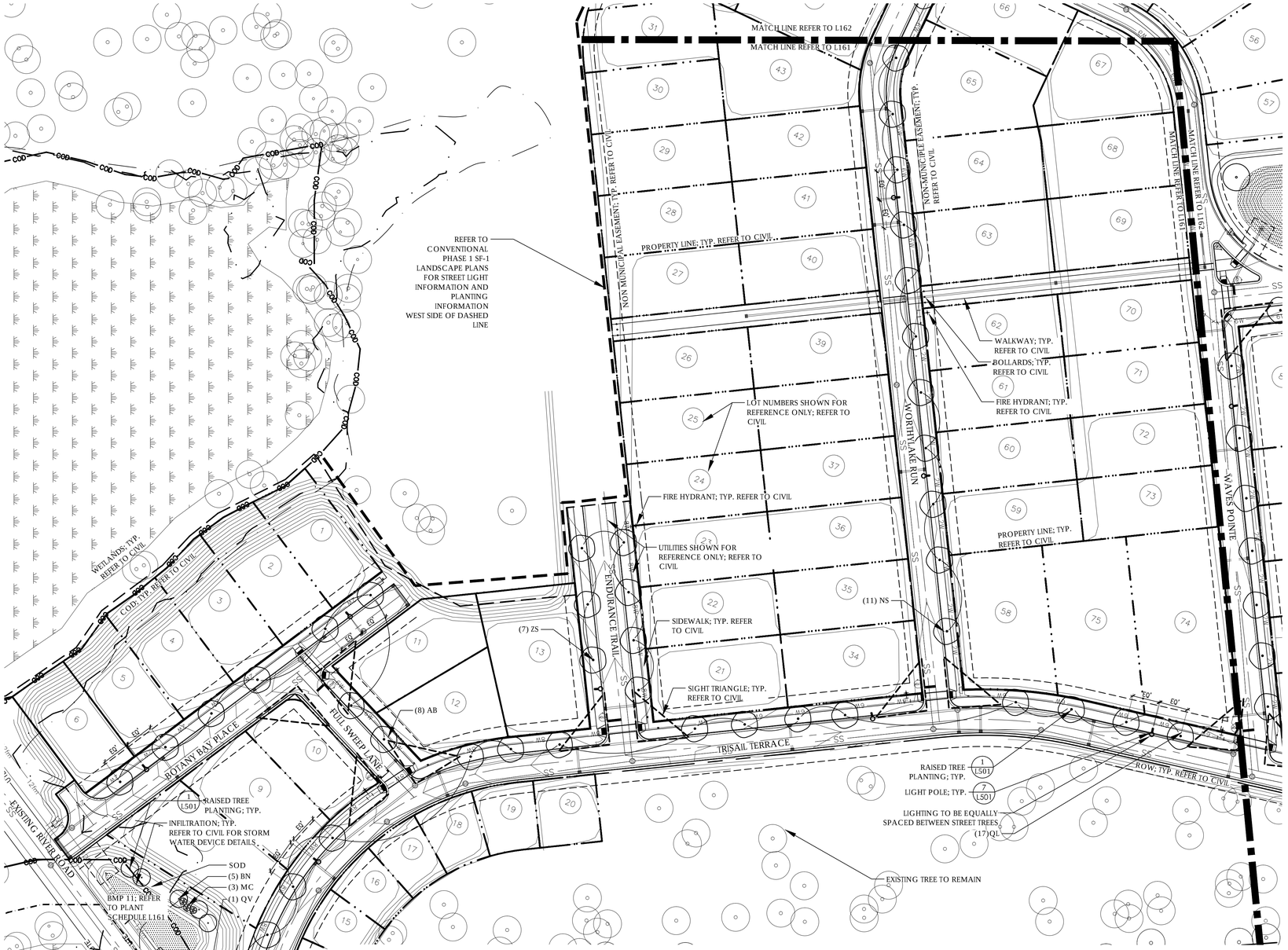

1 STREET TREE PLANTING PLAN
SCALE: 1" = 50'-0"

PLANTING SCHEDULE - BMP 11

SYM	QTY	BOTANICAL NAME	COMMON NAME	CAL/RT	MIN. HT.	MIN. SPR.	REMARKS
TREES							
QV	1	QUERCUS VIRGINIANA	LIVE OAK	-	8'-10'	-	STRONG CENTRAL LEADER; NO INCLUDED BARK
BN	5	BETULA NIGRA 'DURA HEAT'	DURA HEAT RIVER BIRCH	-	8'-10'	-	MULTI-STEM (3) CANES ONLY
SHRUBS							
MC	3	MYRICA CERIFERA	WAX MYRTLE	CONT	12"	12"	FULL, DENSE
SOD							
SOD	4,000 SF	BERMUDA	BERMUDA		-	-	SAND BASED GROWN SOD

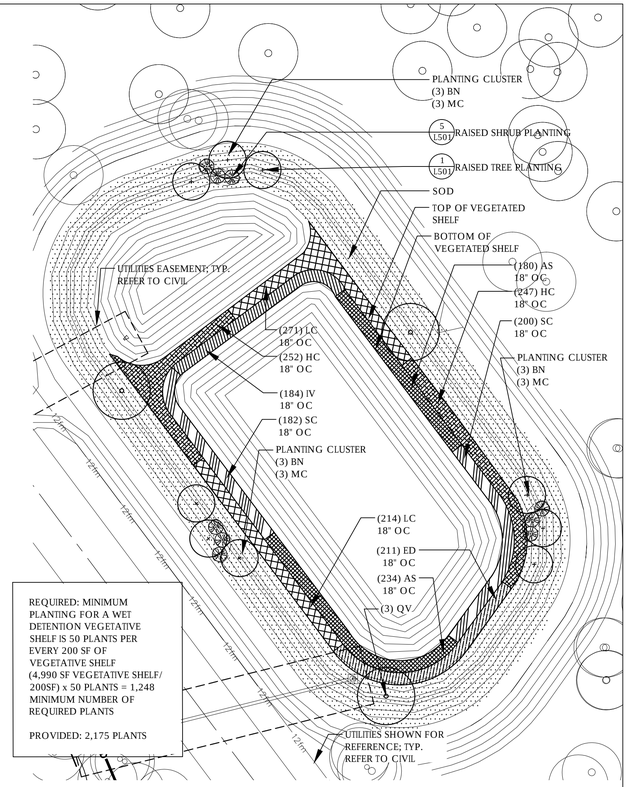

REQUIRED: MINIMUM PLANTING FOR A WET DETENTION VEGETATIVE SHELF IS 50 PLANTS PER EVERY 200 SF OF VEGETATIVE SHELF (4,990 SF VEGETATIVE SHELF/ 200SF) x 50 PLANTS = 1,248 MINIMUM NUMBER OF REQUIRED PLANTS

PROVIDED: 2,175 PLANTS

PLANTING SCHEDULE - BMP 10

SYM	QTY	BOTANICAL NAME	COMMON NAME	CAL/RT	MIN. HT.	MIN. SPR.	REMARKS
TREES							
QV	3	QUERCUS VIRGINIANA	LIVE OAK	-	8'-10'	-	STRONG CENTRAL LEADER; NO INCLUDED BARK
BN	9	BETULA NIGRA 'DURA HEAT'	DURA HEAT RIVER BIRCH	-	8'-10'	-	MULTI-STEM (3) CANES ONLY
SHRUBS							
MC	9	MYRICA CERIFERA	WAX MYRTLE	CONT	12"	12"	FULL, DENSE
UPPER SHELF							
ED	211	EUPATORIADELPHUS DUBIUS	DWARF JOE PYE WEED	4" POT	15"	-	18" O.C.
HC	499	HIBISCUS COCCINEUS	SCARLET ROSE MALLOW	4" POT	15"	-	18" O.C.
LC	485	LOBELIA CARDINALIS	CARDINAL FLOWER	4" POT	15"	-	18" O.C.
LOWER SHELF							
AS	414	ACORUS SUBCORDATUM	SWEETFLAG	4" POT	15"	-	18" O.C.
IV	184	IRIS VIRGINICA	BLUE FLAG IRIS	4" POT	15"	-	18" O.C.
SC	382	SCIRPUS CYPERNIUS	WOOLGRASS	4" POT	15"	-	18" O.C.
SOD							
SOD	11,600 SF	BERMUDA	BERMUDA	-	-	-	SAND BASED GROWN SOD

2 BMP 10 PLANTING PLAN
SCALE: 1" = 30'-0"

0 15 30 60

N

Approved Construction Plan

Name Date

Planning_____

Traffic_____

Fire_____

1 inch

For each open utility cut of City streets, a $325 permit shall be required from the City prior to occupancy and/or project acceptance.

CITY OF WILMINGTON NORTH CAROLINA

Public Services • Engineering Division

APPROVED STORMWATER MANAGEMENT PLAN

Date:_____ Permit #_____

Signed: _____

REV.NO.	DESCRIPTIONS	DATE
	TRC RE-SUBMITTAL	01/19/2016
	TRC RE-SUBMITTAL	09/16/2015
	CITY OF WILMINGTON TRC SUBMITTAL	09/16/2015

REVISIONS

SEAL NORTH CAROLINA PROFESSIONAL ENGINEER SEAL 678 U.S.A. FINAL DRAWINGS DO NOT USE FOR CONSTRUCTION

SEAL NORTH CAROLINA PROFESSIONAL ENGINEER SEAL 678 U.S.A. FINAL DRAWINGS DO NOT USE FOR CONSTRUCTION

McKIM&CREED

License: F-1222

www.mckimcreed.com

NASH NORTH AMERICA SCOTSH HOUSE, LLC

RIVERLIGHTS by Newland COMMUNITIES

Surface

Surface 678, P.A.
215 Morris Street, Suite 150
Durham, NC 27701
www.surface678.com
p: 919-419-1199
f: 919-419-1669

RIVERLIGHTS-
CONVENTIONAL SF-2

STREET TREE PLAN

DATE:	09/02/2015
MCE PROJ. #	
DRAWN	JI
DESIGNED	JC, ED
CHECKED	JC, ED
PROJ. MGR.	JC

SCALE: AS SHOWN

M&C FILE NUMBER

DRAWING NUMBER: L161

STATUS: FINAL DESIGN

REVISION

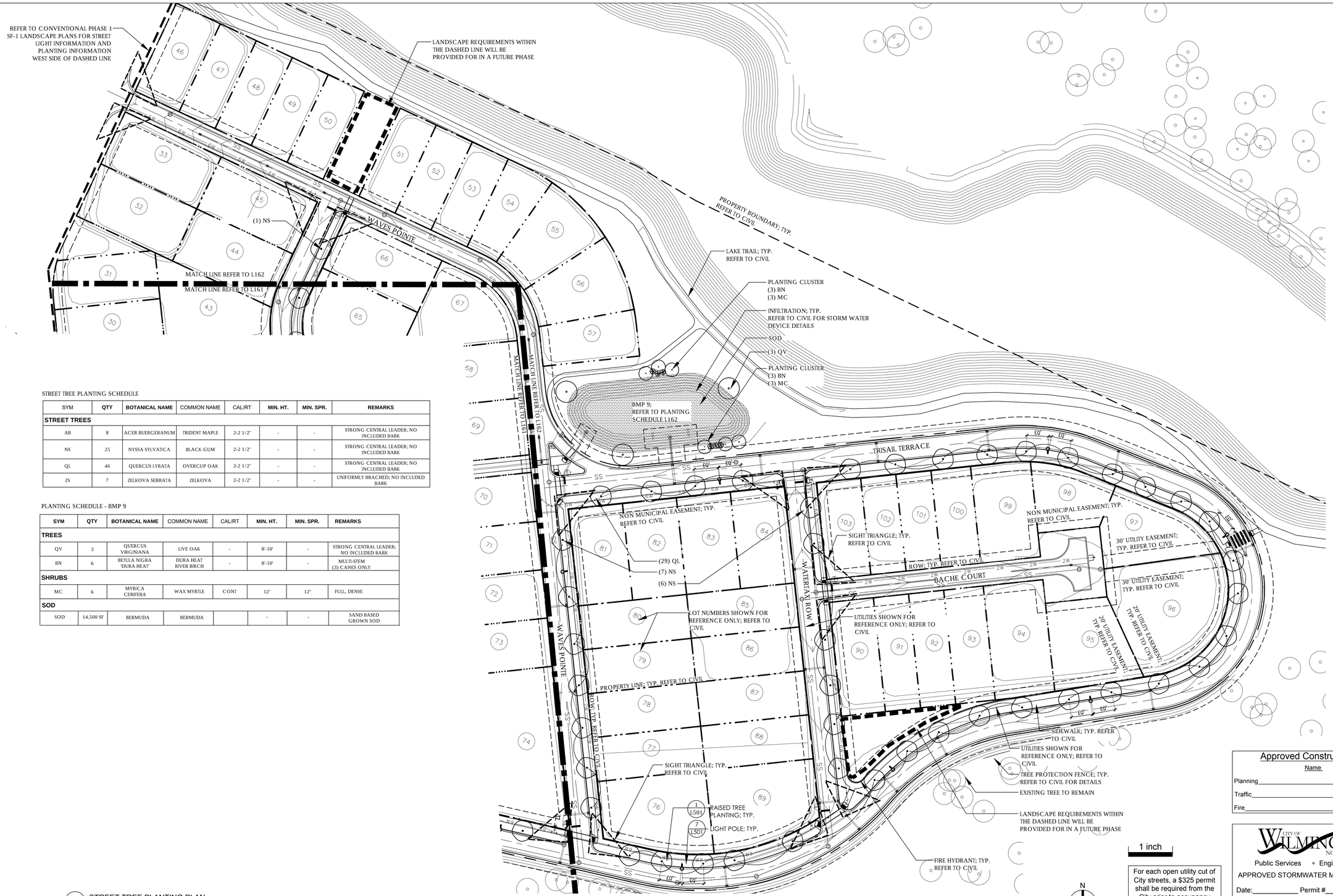

STREET TREE PLANTING SCHEDULE

SYM	QTY	BOTANICAL NAME	COMMON NAME	CAL/RT	MIN. HT.	MIN. SPR.	REMARKS
STREET TREES							
AB	8	ACER BUERGERANUM	TRIDENT MAPLE	2-2 1/2"	-	-	STRONG CENTRAL LEADER; NO INCLUDED BARK
NS	25	NYSSA SYLVATICA	BLACK GUM	2-2 1/2"	-	-	STRONG CENTRAL LEADER; NO INCLUDED BARK
QL	46	QUERCUS LYRATA	OVERCUP OAK	2-2 1/2"	-	-	STRONG CENTRAL LEADER; NO INCLUDED BARK
ZS	7	ZELKOVA SERRATA	ZELKOVA	2-2 1/2"	-	-	UNIFORMLY BRACHED; NO INCLUDED BARK

PLANTING SCHEDULE - BMP 9

SYM	QTY	BOTANICAL NAME	COMMON NAME	CAL/RT	MIN. HT.	MIN. SPR.	REMARKS
TREES							
QV	3	QUERCUS VIRGINIANA	LIVE OAK	-	8'-10'	-	STRONG CENTRAL LEADER; NO INCLUDED BARK
BN	6	BETULA NIGRA 'DURA HEAT'	DURA HEAT RIVER BIRCH	-	8'-10'	-	MULTI-STEM (3) CANES ONLY
SHRUBS							
MC	6	MYRICA CERIFERA	WAX MYRTLE	CONT	12"	12"	FULL, DENSE
SOD							
SOD	14,500 SF	BERMUDA	BERMUDA		-	-	SAND BASED GROWN SOD

1 STREET TREE PLANTING PLAN
SCALE: 1" = 50'-0"

Approved Construction Plan

	Name	Date
Planning		
Traffic		
Fire		

CITY OF WILMINGTON NORTH CAROLINA
Public Services ◦ Engineering Division
APPROVED STORMWATER MANAGEMENT PLAN
Date:_____ Permit #_____
Signed: _____

For each open utility cut of City streets, a $325 permit shall be required from the City prior to occupancy and/or project acceptance.

REV.NO.	DESCRIPTIONS	DATE
	TRC RE-SUBMITTAL	01/19/2016
	TRC RE-SUBMITTAL	09/16/2015
	CITY OF WILMINGTON TRC SUBMITTAL	09/16/2015

REVISIONS

SEAL: NORTH CAROLINA PROFESSIONAL ENGINEER SEAL 028361 — FINAL DRAWINGS DO NOT USE FOR CONSTRUCTION

SEAL: NORTH CAROLINA PROFESSIONAL LANDSCAPE ARCHITECT SEAL 678 — FINAL DRAWINGS DO NOT USE FOR CONSTRUCTION

McKIM&CREED
License: F-1222
www.mckimcreed.com

NASH — NORTH AMERICA SEKISUI HOUSE, LLC
RIVERLIGHTS by Newland COMMUNITIES
Surface 678, P.A.
215 Morris Street, Suite 150
Durham, NC 27701
www.surface678.com
p: 919-419-1199
f: 919-419-1669

RIVERLIGHTS-CONVENTIONAL SF-2

STREET TREE PLAN

DATE:	09/02/2015
MCE PROJ. #	
DRAWN	JI
DESIGNED	JC, ED
CHECKED	JC, ED
PROJ. MGR.	JC

SCALE: AS SHOWN

M&C FILE NUMBER

DRAWING NUMBER: L162

STATUS: FINAL DESIGN

REVISION

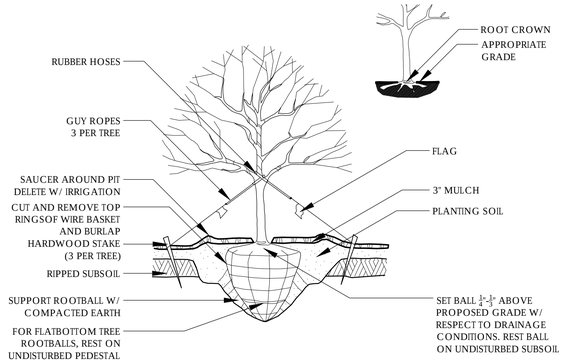

1 RAISED TREE PLANTING

* FOR SPECIES SELECTION REFER TO PLANTING SCHEDULE ON L161 AND L162

SCALE: NTS

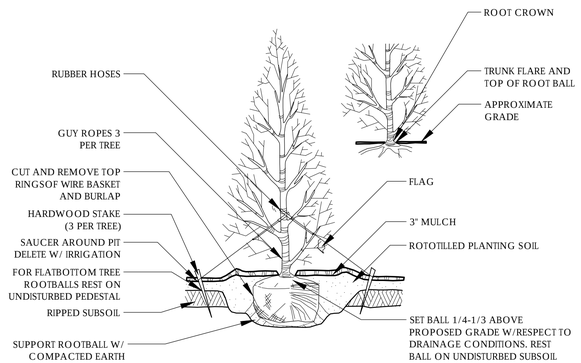

4 EVERGREEN TREE PLANTING

SCALE: NTS

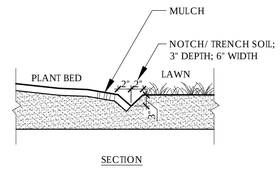

SECTION

2 LAWN/PLANT BED EDGE

0 1' 2'

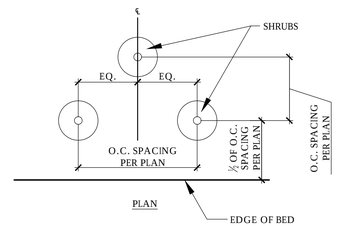

PLAN

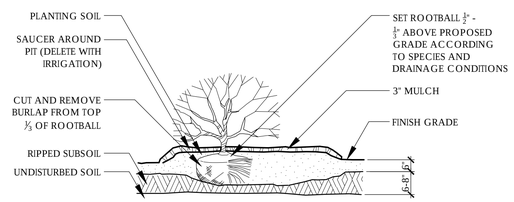

5 RAISED SHRUB PLANTING

SCALE: NTS

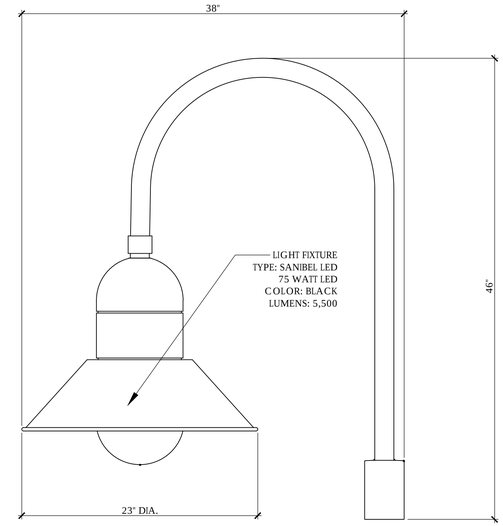

NON STANDARD LIGHT FIXTURE DETAIL

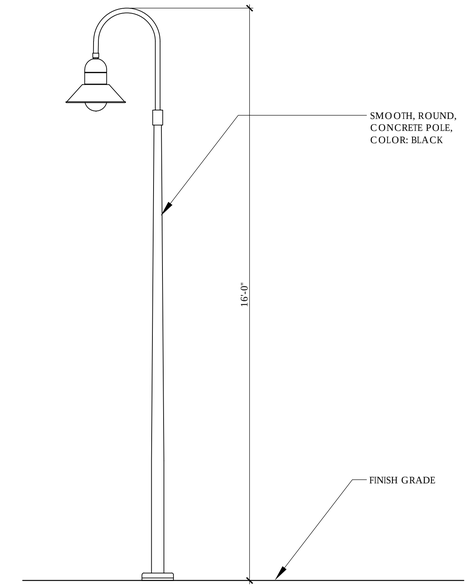

LIGHT FIXTURE POLE ELEVATION

7 LIGHT POLE

0 1' 2'

* LIGHTING SHOWN FOR REFERENCE ONLY.

* LIGHT POLE TO BE SIMILAR IN STYLE, COLOR, TYPE.

* FINAL LAYOUT AND FOOT CANDLE STUDIES SHALL BE PROVIDED BY THE POWER COMPANY.

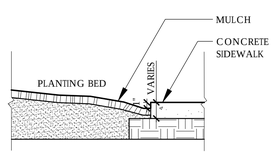

SECTION

8 CONCRETE/PLANT BED EDGE

0 1' 2'

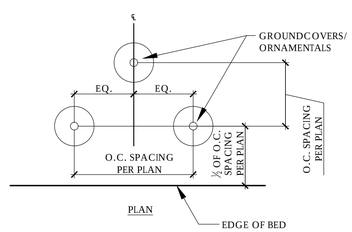

PLAN

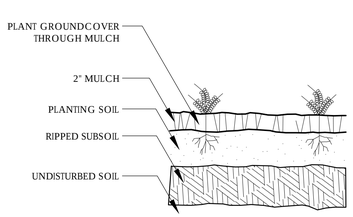

6 GROUNDCOVER PLANTING

SCALE: NTS

REV.NO.	DESCRIPTIONS	DATE
	TRC RE-SUBMITTAL	01/19/2016
	TRC RE-SUBMITTAL	09/16/2015
	CITY OF WILMINGTON TRC SUBMITTAL	09/16/2015

REVISIONS

SEAL: NORTH CAROLINA LICENSED LANDSCAPE ARCHITECT SURFACE 678, P.A. FINAL DRAWINGS DO NOT USE FOR CONSTRUCTION

SEAL: NORTH CAROLINA LICENSED LANDSCAPE ARCHITECT MICHAEL J. DAVIS FINAL DRAWINGS DO NOT USE FOR CONSTRUCTION

McKIM&CREED

License: F-1222

www.mckimcreed.com

NASH — North America Sensish House, LLC

RIVERLIGHTS by Newland COMMUNITIES

Surface

Surface 678, P.A.
215 Morris Street, Suite 150
Durham, NC 27701
www.surface678.com
p: 919-419-1199
f: 919-419-1669

CONVENTIONAL PHASE 2

DETAILS

DATE:	09/02/2015
MCE PROJ. #	
DRAWN	JI
DESIGNED	JC, ED
CHECKED	JC, ED
PROJ. MGR.	JC

SCALE: AS SHOWN

M&C FILE NUMBER

DRAWING NUMBER: L501

STATUS: FINAL DESIGN

REVISION