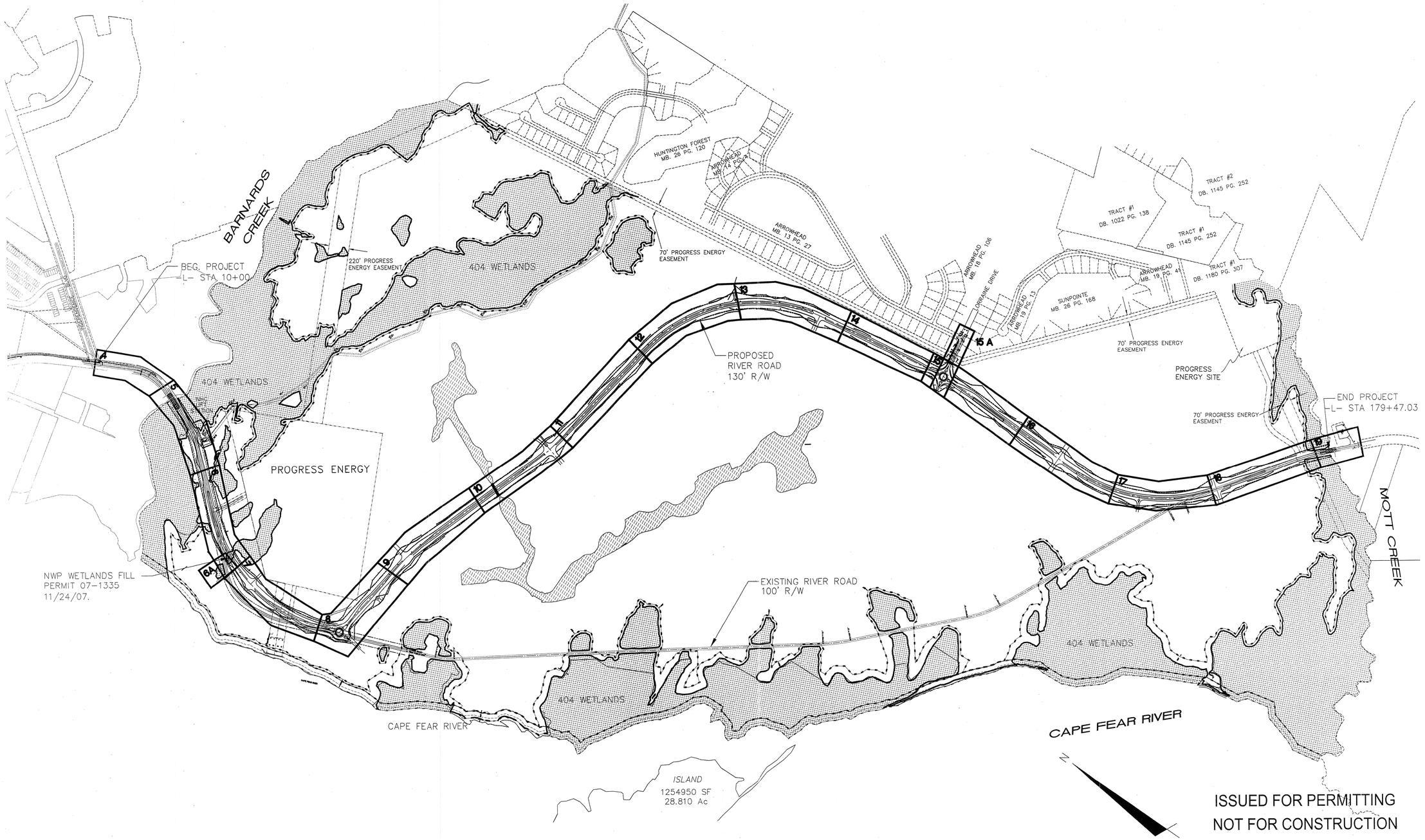

ISSUED FOR PERMITTING
NOT FOR CONSTRUCTION

REV.NO.	DESCRIPTIONS	DATE
F	REVISED WATERLINE AND CROSS SECTIONS	09/08/08
E	REVISED PER NCDOT HYDRAULICS COMMENTS 07/15/08	07/28/08
D	REVISION 2 PLAN SET	07/09/08
	SUBMIT FINAL DESIGN PLANS TO NCDOT	5/30/08

REVISIONS

SEAL

SEAL
NORTH CAROLINA
PROFESSIONAL
SEAL
22574
ENGINEER
RICHARD M. CREED
09/10/08

McKIM & CREED
243 North Front Street
Wilmington, North Carolina 28401
Phone: (910)343-1048 , Fax: (910)251-8282
AA0002667 EB0006691
www.mckimcreed.com

Newland® COMMUNITIES
AT THE HEART OF GREAT LIVING

RIVER ROAD

PROJECT LAYOUT SHEET

DATE:	JUNE 2008
MCE PROJ. #	2735-0007
DRAWN	ASA
DESIGNED	JPS
CHECKED	RMC
PROJ. MGR.	RMC

SCALE
HORIZONTAL: 1"=500'
VERTICAL:

M&C FILE NUMBER: G-002
DRAWING NUMBER: 1A

STATUS: FINAL DESIGN PLANS
REVISION: F

J:\2735\0007\80-Drawings\G-002-027350007.dwg, 9/5/2008 2:16:04 PM, Xerox 6204 Wide Format with FreeFlow Access.pc3

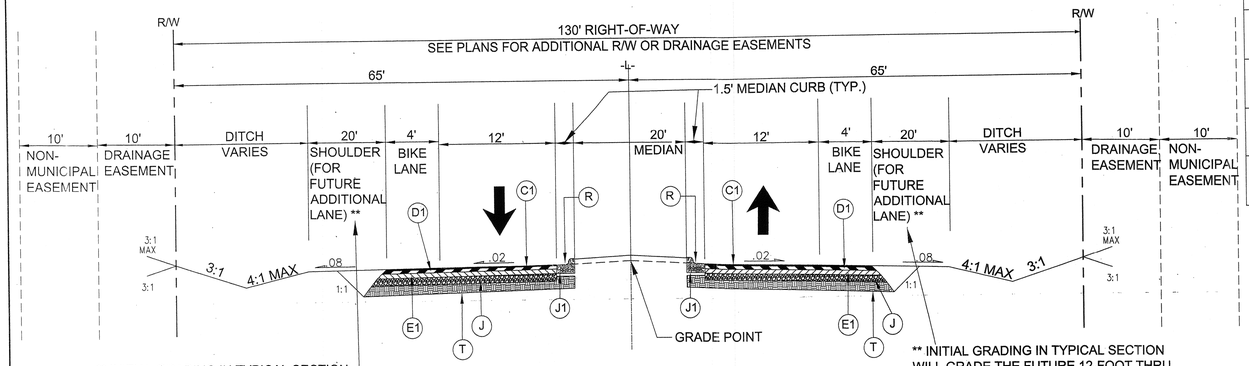

** INITIAL GRADING IN TYPICAL SECTION WILL GRADE THE FUTURE 12-FOOT THRU TRAVEL LANE AT NC (2%), THEN TRANSITION TO AN 8% SHOULDER SECTION FOR 8-FEET.

** INITIAL GRADING IN TYPICAL SECTION WILL GRADE THE FUTURE 12-FOOT THRU TRAVEL LANE AT NC (2%), THEN TRANSITION TO AN 8% SHOULDER SECTION FOR 8-FEET.

PROPOSED RIVER ROAD TYPICAL SECTION

STA: 30+21.40 TO 37+45.09
STA: 47+03.47 TO 58+15.16 (SEE TRAFFIC CIRCLE DETAILS)
STA: 67+39.82 TO 78+33.21
STA: 86+99.38 TO 113+72.16
STA: 126+40.42 TO 139+54.58 (SEE TRAFFIC CIRCLE DETAILS)
STA: 152+22.03 TO 153+93.37
STA: 158+56.06 TO 162+08.49
STA. 170+91.22 TO 171+41.19

	PAVEMENT SCHEDULE
C1	2" ASPHALT CONCRETE SURFACE COARSE, TYPE S9.5B AT AN AVERAGE RATE OF 224 LBS. PER SQ. YD.
D1	2.5" ASPHALT CONCRETE INTERMEDIATE COURSE, TYPE I 19.0 B AT AN AVERAGE RATE OF 285 LBS. PER SQ. YD.
E1	3.0" ASPHALT CONCRETE BASE COURSE, TYPE B 25.0B AT A RATE OF 342 LBS. PER SQ. YD.
J	8.0" AGGREGATE BASE COURSE
J1	4" AGGREGATE BASE COURSE TO BE INSTALLED UNDER ALL CURB AND GUTTER

	PAVEMENT SCHEDULE
R	1'-6" MEDIAN CURB AND GUTTER
T	EARTH MATERIAL - SUBGRADE SOILS
U	EXISTING PAVEMENT
W	VARIABLE DEPTH ASPHALT PAVEMENT (SEE STANDARD WEDGING DETAIL ON SHT 2)

NOTE: ONLY THE FINAL 2.0" OVERLAY OF S9.5B IS REQUIRED WHERE PAVEMENT WIDENING IS TO BE ACCOMPLISHED ABOVE AN EXISTING PAVEMENT STRUCTURE

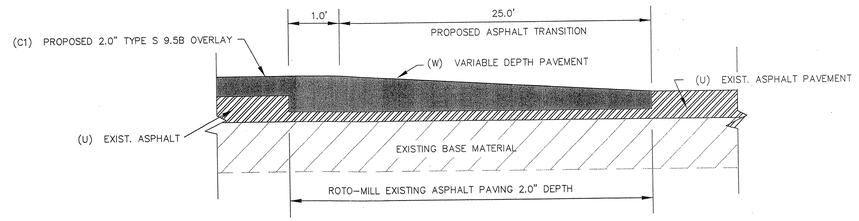

PAVEMENT TRANSITION DETAIL
NOT TO SCALE

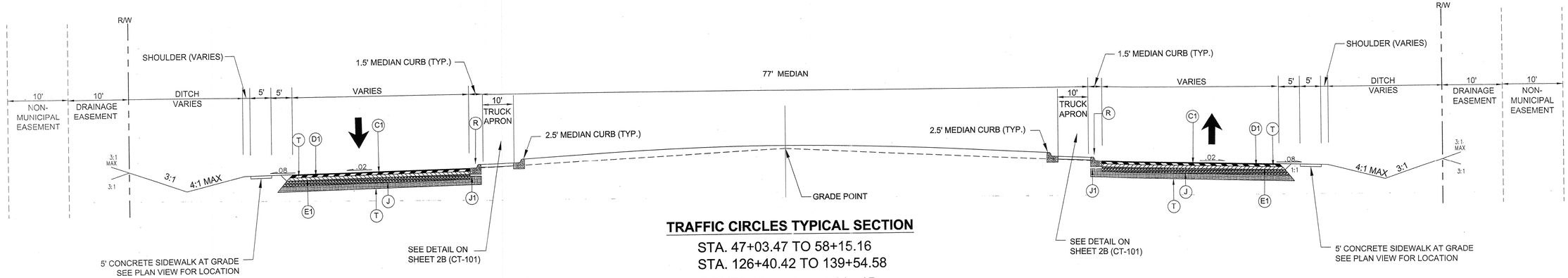

5' CONCRETE SIDEWALK AT GRADE SEE PLAN VIEW FOR LOCATION

SEE DETAIL ON SHEET 2B (CT-101)

SEE DETAIL ON SHEET 2B (CT-101)

5' CONCRETE SIDEWALK AT GRADE SEE PLAN VIEW FOR LOCATION

TRAFFIC CIRCLES TYPICAL SECTION

STA. 47+03.47 TO 58+15.16
STA. 126+40.42 TO 139+54.58

(SEE SHEETS 7 - 8 AND 14 - 15 FOR PAVEMENT TRANSITION AREAS, SPECIFIC WIDTHS, AND SUPER ELEVATION RATES.)

ISSUED FOR PERMITTING
NOT FOR CONSTRUCTION

REV.NO.	DESCRIPTIONS	DATE
F	WATERLINE AND CROSS SECTION REVISIONS	09/08/09
E	REVISED PER NCDOT HYDRAULICS COMMENTS 07/15/08	07/28/08
D	REVISION 2 PLAN SET RELEASE	07/28/08
A	SUBMIT FINAL DESIGN PLANS TO NCDOT	06/27/07

REVISIONS

SEAL

SEAL
NORTH CAROLINA PROFESSIONAL SEAL 22574 ENGINEER RYAN M. CREED
07/28/08

McKIM&CREED
243 North Front Street
Wilmington, North Carolina 28401
Phone: (910)343-1048 , Fax: (910)251-8282
AA0002667 EB0006691
www.mckimcreed.com

Newland COMMUNITIES
AT THE HEART OF GREAT LIVING

RIVER ROAD

ROADWAY TYPICAL SECTIONS

DATE:	JUNE 2007
MCE PROJ. #	02735-0007
DRAWN	ASA
DESIGNED	PS
CHECKED	RMC
PROJ. MGR.	RMC

SCALE
HORIZONTAL: N/A
VERTICAL: NA

M&C FILE NUMBER CT-300
DRAWING NUMBER 2

STATUS: FINAL DESIGN PLANS
REVISION F

S:\2735\0007\80-Drawings\CT300-027350007.dwg, 9/9/2008 3:40:25 PM, Xerox 6204 Wide Format with FreeFlow Access.pc3

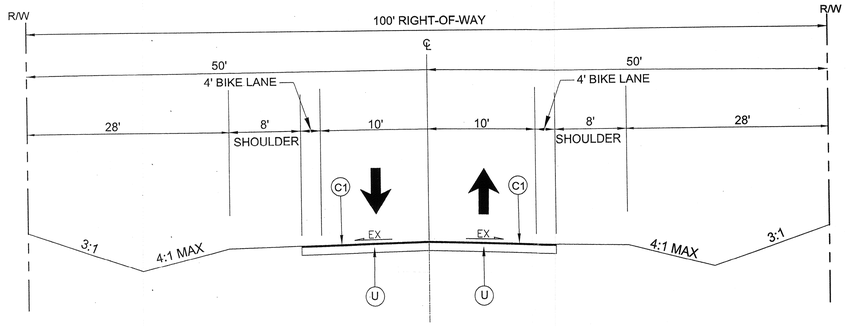

EXISTING RIVER ROAD

STA 10+00 TO 20+22 (END BRIDGE BARNARD'S CREEK)
OVERLAY EXISTING PAVEMENT FROM 20+22 TO
22+58.19

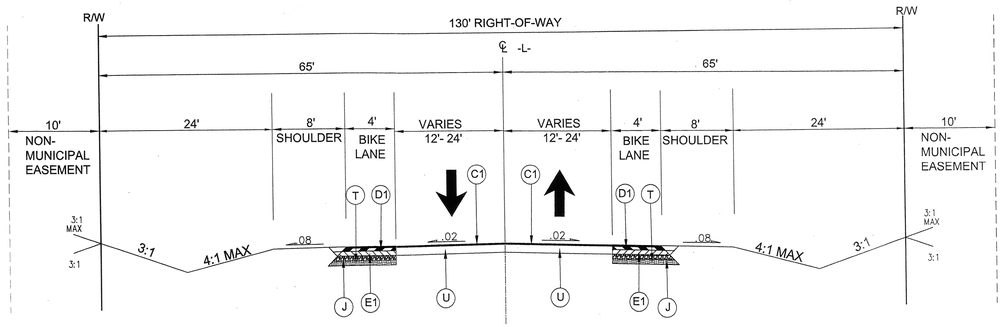

PROPOSED RIVER ROAD WIDENING TO / FROM MEDIAN SECTION

STA. 22+58.19 TO 30+21.40 (BEGIN MEDIAN)
STA.172+17.59 (END MEDIAN) TO
179+07.09 (BEGIN BRIDGE MOTT CREEK)

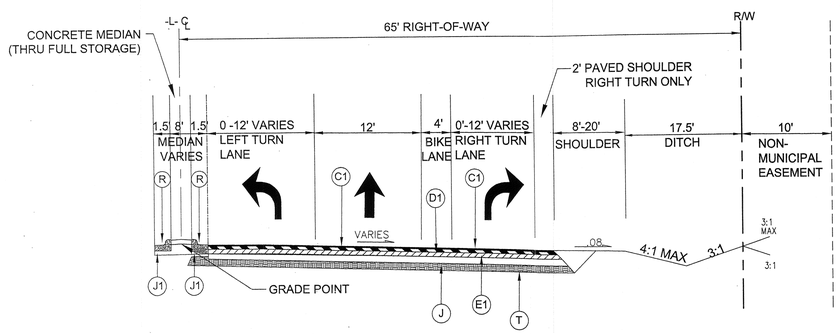

SOUTH BOUND RIGHT OR LEFT TURN LANE SECTION

STA: 37+45.09 TO 40+64.16
STA: 52+41.64 TO 62+71.51 (DUAL THRU LANES - SB)
STA: 59+16.35 TO 62+71.51 (LEFT TURN ONLY)
STA: 78+33.30 TO 81+88.67
STA: 113+72.16 TO 117+31.08 (RIGHT TURN ONLY)
STA: 144+02.78 TO 147+58.28
STA: 153+93.88 TO 157+44.01 (RIGHT TURN ONLY)
STA: 162+08.76 TO 165+71.28

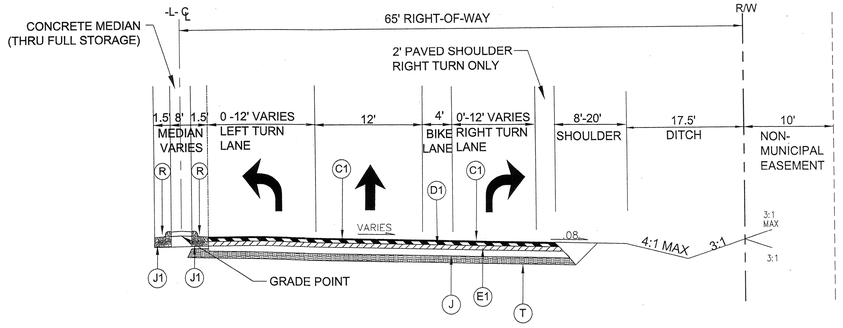

NORTH BOUND RIGHT OR LEFT TURN LANE SECTION

STA: 41+96.99 TO 45+61.74
STA: 40+06.00 TO 54+53.64 (DUAL THRU LANES - NB)
STA: 63+84.40 TO 67+39.72
STA: 83+43.84 TO 86+99.38
STA: 109+28.12 TO 112+78.12 (RIGHT TURN ONLY)
STA: 118+74.34 TO 122+29.84 (LEFT TURN ONLY)
STA: 148+88.96 TO 152+46.47
STA: 167+35.68 TO 170+91.28

ISSUED FOR PERMITTING
NOT FOR CONSTRUCTION

REV.NO.	DESCRIPTIONS	DATE
	REVISIONS	
F	REVISED WATERLINE AND CROSS SECTIONS	09/08/08
E	REVISED PER NCDOT HYDRAULICS COMMENTS 07/15/08	07/28/08
D	REVISION 2 PLAN SET	07/09/08
A	SUBMIT FINAL DESIGN PLANS TO NCDOT	06/27/07

SEAL

SEAL
NORTH CAROLINA PROFESSIONAL SEAL 22574 ENGINEER RICHARD M. CARROLL
09/08/08

McKIM&CREED
243 North Front Street
Wilmington, North Carolina 28401
Phone: (910)343-1048 , Fax: (910)251-8282
AA0002667 EB0006691
www.mckimcreed.com

Newland COMMUNITIES
AT THE HEART OF GREAT LIVING

RIVER ROAD

ROADWAY TYPICAL SECTIONS

DATE:	JUNE 2007
MCE PROJ. #	02735-0007
DRAWN	ASA
DESIGNED	JPS
CHECKED	RMC
PROJ. MGR.	RMC

SCALE
HORIZONTAL: N/A
VERTICAL: NA

M&C FILE NUMBER CT-300
DRAWING NUMBER 2A

STATUS: FINAL DESIGN PLANS
REVISION F

...\02735\0007\80-Drawings\CT300-027350007.dwg, 9/4/2008 1:28:35 PM, tcarter, 1:1

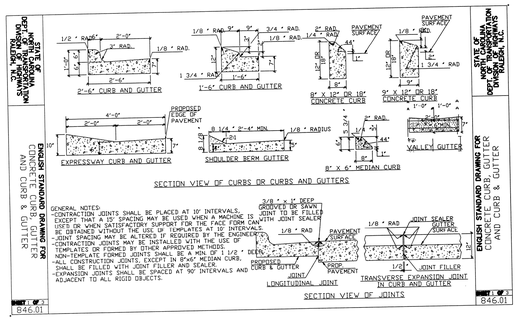

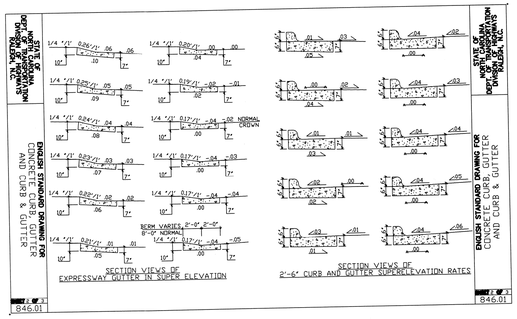

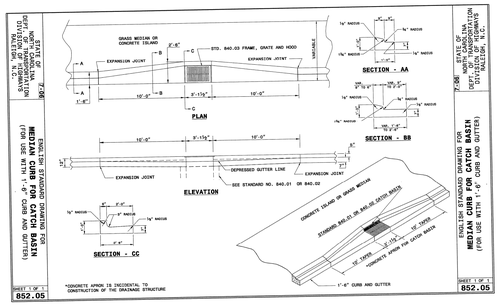

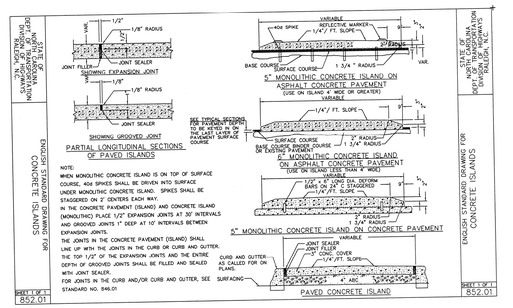

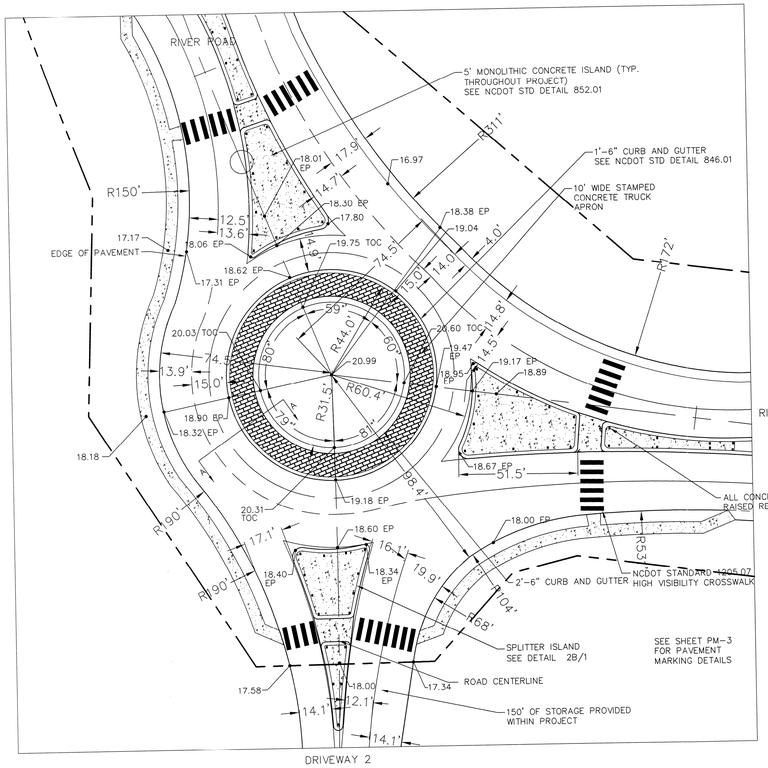

RIVER ROAD RE-ALIGNMENT AND DRIVEWAY 2 ROUNDABOUT PLAN

NOT TO SCALE

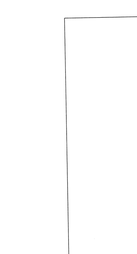

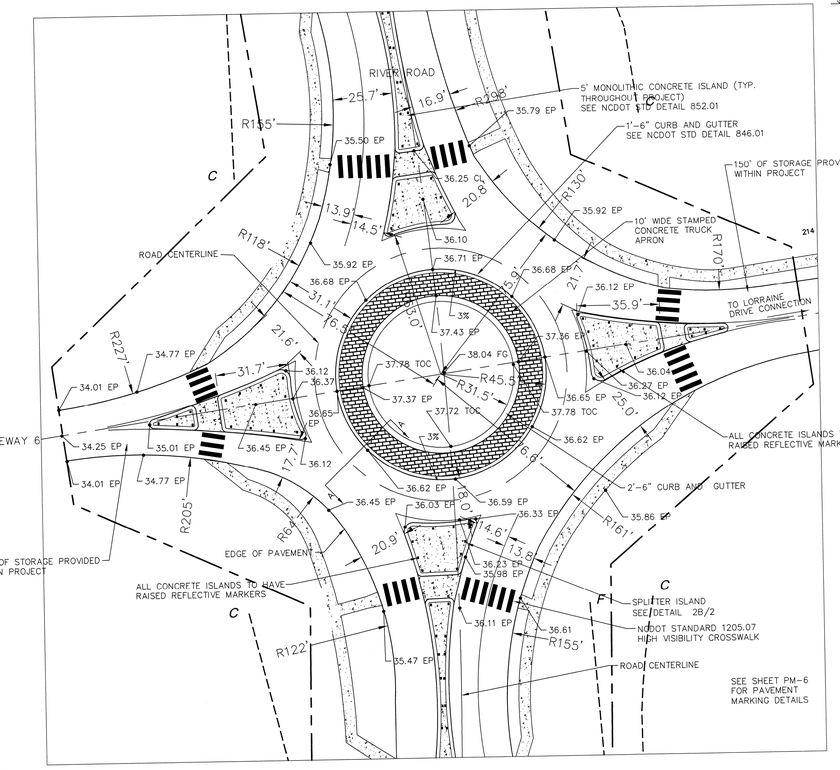

RIVER ROAD RE-ALIGNMENT AND LORRAINE DRIVE CONNECTION/DRIVEWAY 6 ROUNDABOUT PLAN

NOT TO SCALE

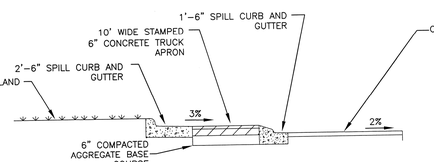

(A-A) TRAFFIC CIRCLE SECTION

NOT TO SCALE

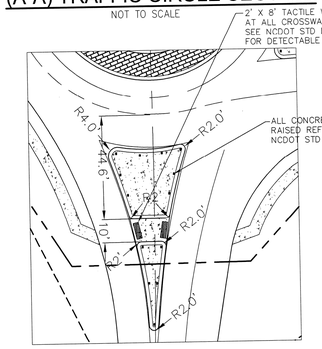

SPLITTER ISLANDS 2B/1

NOT TO SCALE

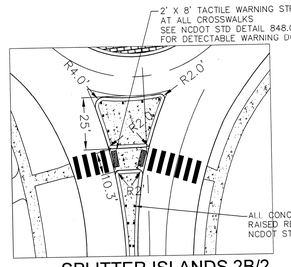

SPLITTER ISLANDS 2B/2

NOT TO SCALE

REV.NO.	DESCRIPTIONS	DATE
	REVISIONS	
F	REVISED WATERLINE AND CROSS SECTIONS	09/08/08
E	REVISED PER NCDOT HYDRAULICS COMMENTS 07/15/08	07/28/08
D	REVISION 2 PLAN SET	07/09/08
	REVISED PER NCDOT COMMENTS	05/2/08
	REVISED PER NCDOT COMMENTS	04/22/08
	REVISED PER NCDOT COMMENTS- DRAINAGE,ROUNDABOUTS,SIGNAGE, STRIPING, PEDESTRIAN TUNNEL	2/15/08
	RE-RELEASED FOR FINAL BIDDING	06/27/07
A	SUBMITTAL O FINAL DESIGN PLANS TO NCDOT	

SEAL

SEAL 22574 ENGINEER RICHARD M. CODDER

McKIM & CREED
243 North Front Street
Wilmington, North Carolina 28401
Phone: (910)343-1048 , Fax: (910)251-8282
AA0002667 EB0006691
www.mckimcreed.com

Newland COMMUNITIES
AT THE HEART OF GREAT LIVING

RIVER ROAD

ROADWAY DETAILS RIVER ROAD

DATE:	JUNE 2007
MCE PROJ. #	02735-0007
DRAWN	ASA
DESIGNED	CCC
CHECKED	RMC
PROJ. MGR.	RMC

SCALE
HORIZONTAL: 1"=40'
VERTICAL: 1"=4'

M&C FILE NUMBER CT-101
DRAWING NUMBER 2B

STATUS: FINAL DESIGN PLANS REVISION F

I:\projects\02735-0007\CT\DWG\RIVER ROAD\02735-0007-CT-101-RIVER ROAD.dwg 07/01/08 09:09:39 rmcodder 1:1

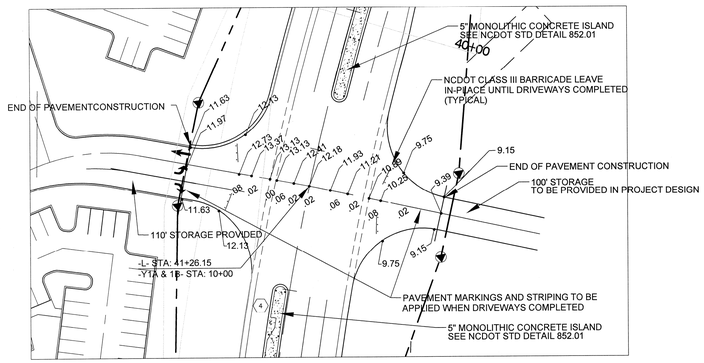

RIVER ROAD RE-ALIGNMENT AND DRIVEWAY 1A & 1B
INTERSECTION DETAIL 1"=50'

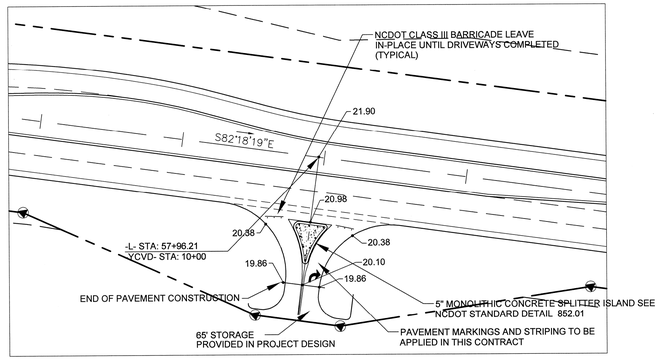

RIVER ROAD RE-ALIGNMENT AND COMMERCIAL VILLAGE DRIVEWAY
INTERSECTION DETAIL 1"=50'

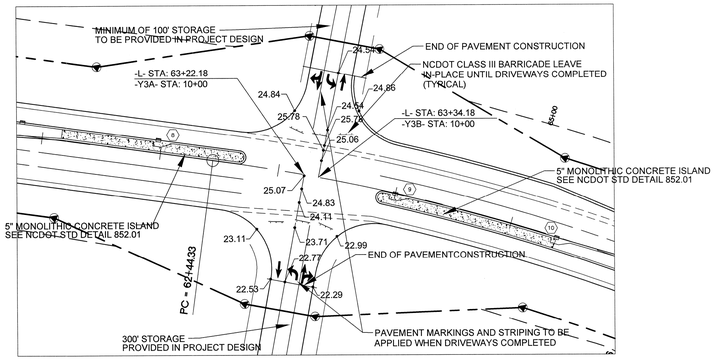

RIVER ROAD RE-ALIGNMENT AND DRIVEWAY 3A &3B
INTERSECTION DETAIL 1"=60'

END OF PAVEMENT CONSTRUCTION

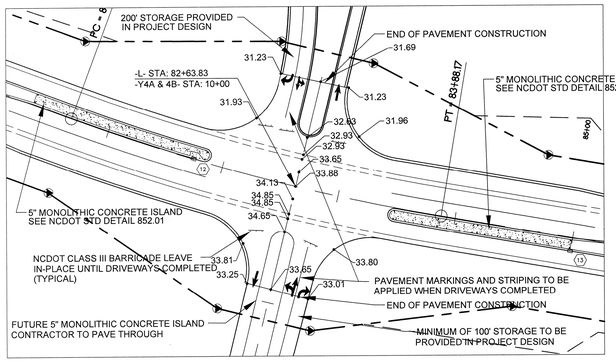

RIVER ROAD RE-ALIGNMENT AND DRIVEWAY 4A &4B
INTERSECTION DETAIL 1"=60'

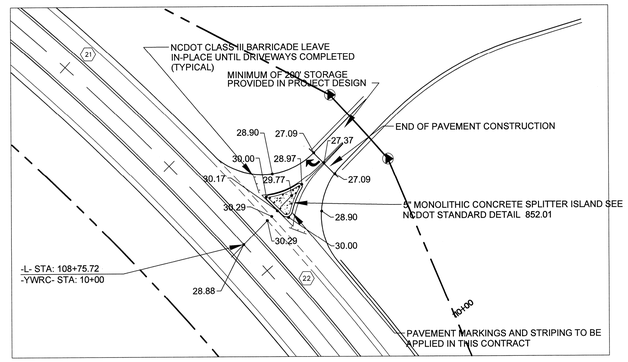

RIVER ROAD RE-ALIGNMENT AND WILDERNESS ROAD CONNECTION
INTERSECTION DETAIL 1"=50'

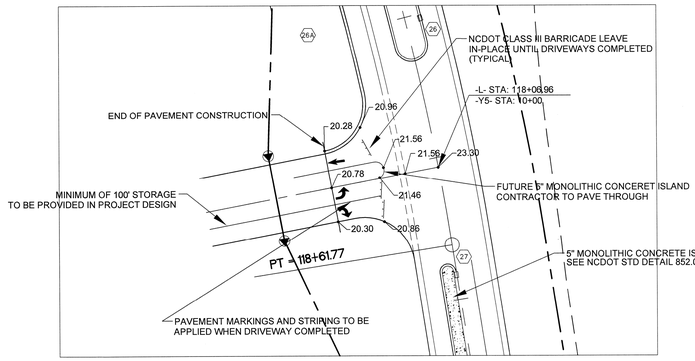

RIVER ROAD RE-ALIGNMENT AND DRIVEWAY 5
INTERSECTION DETAIL 1"=50'

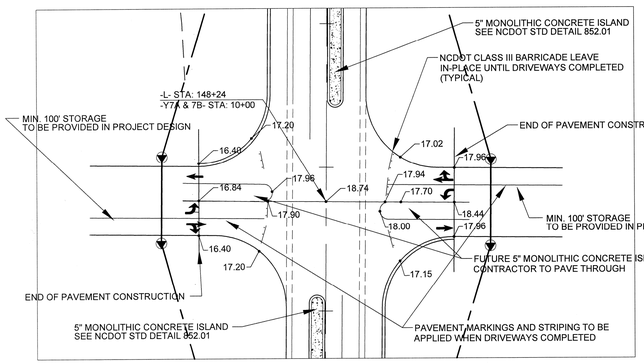

RIVER ROAD RE-ALIGNMENT AND DRIVEWAY 7A &7B
INTERSECTION DETAIL 1"=50'

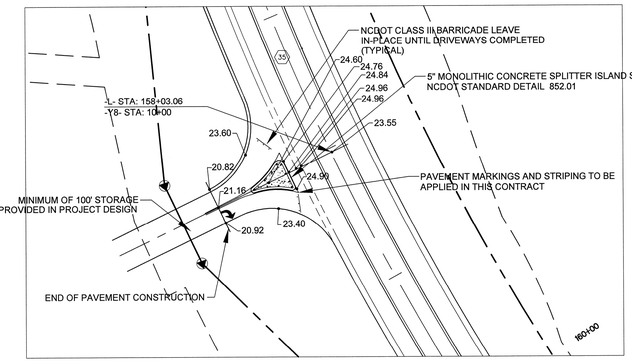

RIVER ROAD RE-ALIGNMENT AND DRIVEWAY 8
INTERSECTION DETAIL 1"=50'

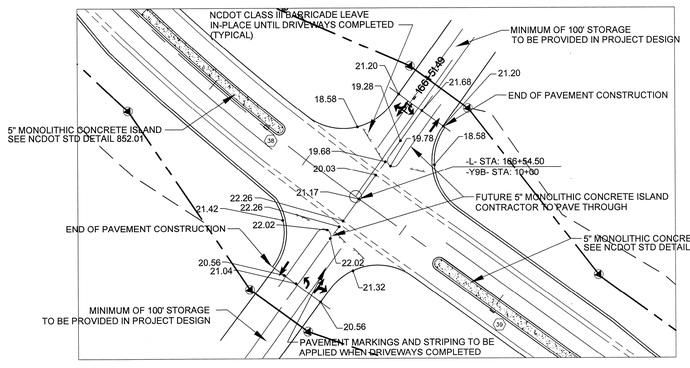

RIVER ROAD RE-ALIGNMENT AND DRIVEWAY 9A &9B
INTERSECTION DETAIL 1"=60'

REV.NO.	DESCRIPTIONS	DATE
F	REVISED WATERLINE AND CROSS SECTIONS	09/08/08
E	REVISION PER NCDOT HYDRAULIC COMMENTS DATED 07/15/08	07/29/08
D	REVISION 2 PLAN SE	07/09/08
	REVISED PER NCDOT COMMENTS	05/12/08
	REVISED PER NCDOT COMMENTS	04/22/08
	REVISED PER NCDOT COMMENTS- DRAINAGE,ROUNDABOUTS,SIGNAGE, STRIPING, PEDESTRIAN TUNNEL	2/15/08
	RE-RELEASED FOR FINAL BIDDING	
A	SUBMITTAL O FINAL DESIGN PLANS TO NCDOT	06/27/07

REVISIONS

SEAL

SEAL
NORTH CAROLINA PROFESSIONAL ENGINEER
022574
RICHARD C. HUNT
09/12/08

McKIM&CREED
243 North Front Street
Wilmington, North Carolina 28401
Phone: (910)343-1048 , Fax: (910)251-8282
AA0002667 EB0006691
www.mckimcreed.com

Newland COMMUNITIES
AT THE HEART OF GREAT LIVING

RIVER ROAD

INTERSECTION DETAILS
RIVER ROAD

DATE:	JUNE 2007
MCF PROJ. #	02735-0007
DRAWN	ASA
DESIGNED	BCE
CHECKED	RMC
PROJ. MGR.	RMC

SCALE
HORIZONTAL: AS SHOWN
VERTICAL: AS SHOWN

M&C FILE NUMBER CT-101A
DRAWING NUMBER 2C

STATUS: FINAL DESIGN PLANS
REVISION F

S:\27-02735\07-00-Drawings\CT-101A-INTERSECTION DETAILS-27-02735-07.dwg, 9/9/2008 10:04:29 AM, tcarter, 1:1

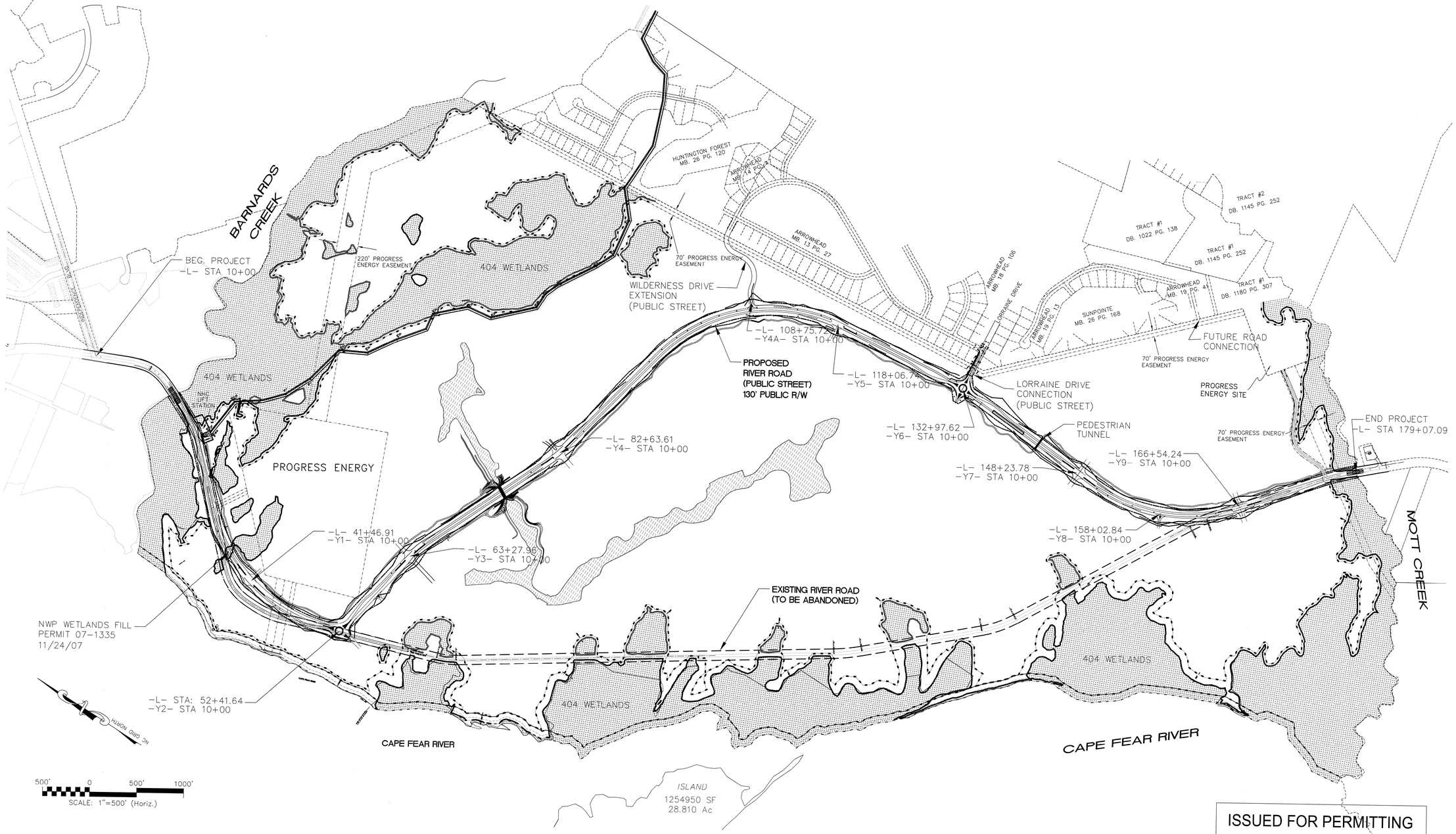

ISSUED FOR PERMITTING
NOT FOR CONSTRUCTION

REV.NO.	DESCRIPTIONS	DATE
F	REVISED WATER LINE AND CROSS SECTIONS	09/08/08
E	REVISED PER NCDOT HYDRAULICS COMMENTS 07/15/08	07/28/08
D	REVISION 2 PLANS SET	07/09/08
C	REVICED PER NCDOT COMMENTS	12/20/07
B	REVISED PER NEW HANOVER COUNTY AND CITY OF WILMINGTON UTILITIES	11/24/07
A	SUBMIT FINAL DESIGN PLANS TO NCDOT	06/27/07

REVISIONS

SEAL

SEAL
NORTH CAROLINA PROFESSIONAL SEAL 22574 ENGINEER RICHARD M. COLLIER
07/08/08

McKIM&CREED
243 North Front Street
Wilmington, North Carolina 28401
Phone: (910)343-1048 , Fax: (910)251-8282
AA0002667 EB0006691
www.mckimcreed.com

Newland COMMUNITIES
AT THE HEART OF GREAT LIVING

RIVER ROAD

OVERALL SITE PLAN

DATE:	JUNE 2008
MCE PROJ. #	2735-0007
DRAWN	ASA
DESIGNED	JPS
CHECKED	RMC
PROJ. MGR.	RMC

SCALE
HORIZONTAL: 1"=500'
VERTICAL:

M&C FILE NUMBER CS-101
DRAWING NUMBER 3

STATUS: FINAL DESIGN PLANS
REVISION F

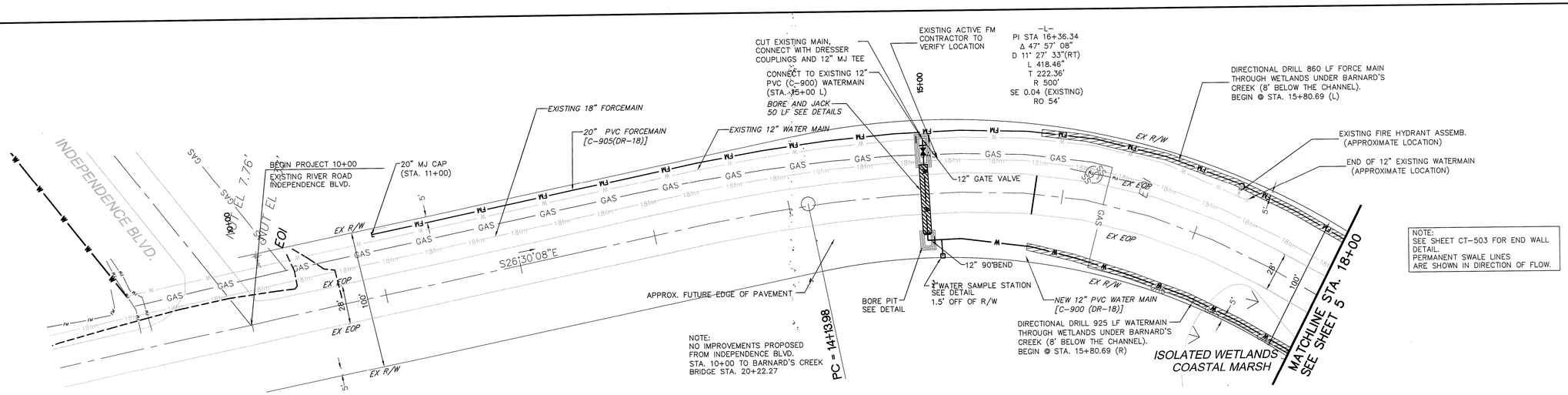

EXISTING RIVER ROAD

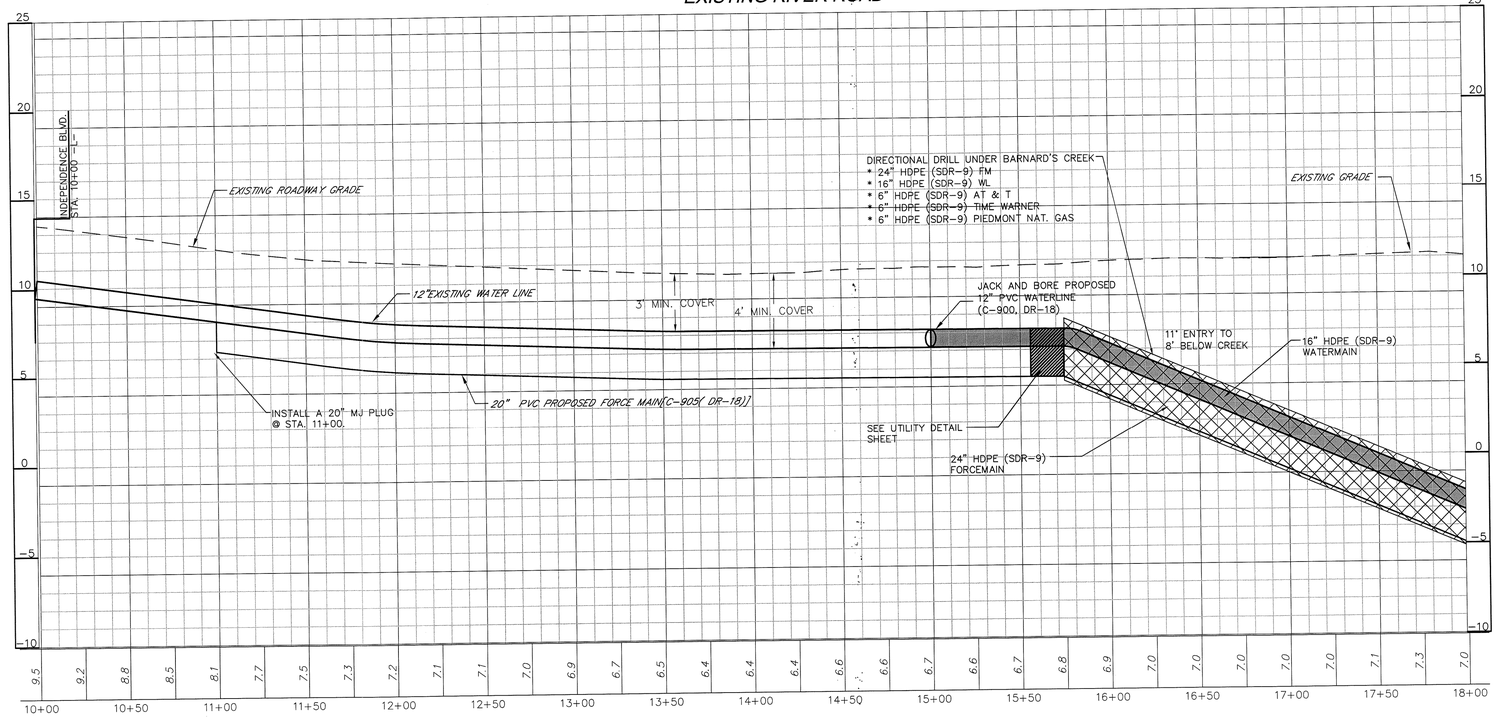

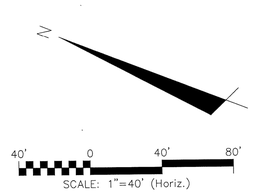

NOTE:
SEE SHEETS
EC-1 TO EC-4 EROSION CONTROL
PM-1 TO PM-8 PAVEMENT MARKINGS, MARKERS AND SIGNING
X-1 TO X-26 CROSS SECTIONS

ISSUED FOR PERMITTING
NOT FOR CONSTRUCTION

EXISTING RIVER ROAD

REV.NO.	DESCRIPTIONS	DATE
	REVISIONS	
G	REVISED PER DISTRICT NCDOT COMMENTS	10/14/08
	BULLETIN DRAWING	10/08/08
F	REVISED WATERLINE AND CROSS SECTIONS	09/03/08
E	REVISED PER NCDOT HYDRAULICS COMMENTS 07/15/08	07/28/08
D	REVISION 2 PLAN SET	06/26/08
	REVISED PER NCDOT ENCROACHMENT COMMENTS	06/13/08
	REVISED PER NHC SEWER COMMENTS	3/28/08
C	REVISED PER NCDOT COMMENTS	12/20/07
B	UPDATED UTILITIES PER NEW HANOVER COUNTY AND CITY OF WILMINGTON	11/24/07
A	SUBMIT FINAL DESIGN PLANS TO NCDOT	6/27/07

SEAL

SEAL
NORTH CAROLINA PROFESSIONAL
SEAL 22574
ENGINEER
RICHARD M. COLLIER
10/14/08

McKIM & CREED
243 North Front Street
Wilmington, North Carolina 28401
Phone: (910)343-1048 , Fax: (910)251-8282
AA0002667 EB0006691
www.mckimcreed.com

Newland COMMUNITIES
AT THE HEART OF GREAT LIVING

RIVER ROAD

ROADWAY PLAN AND PROFILE
RIVER ROAD
STA 10+00 – STA 18+00

DATE:	JUNE 2007
MCE PROJ. #	02735-0007
DRAWN	BCE
DESIGNED	BCE
CHECKED	RMC
PROJ. MGR.	RMC

SCALE
HORIZONTAL: 1"=40'
VERTICAL:

M&C FILE NUMBER
CU-700
DRAWING NUMBER
4

STATUS: FINAL DESIGN PLANS
REVISION G

S:\02735\0007\00\Drawings\CU700-027350007.dwg, CU-700, 10/14/2008 3:36:11 PM, balvington

ISSUED FOR PERMITTING
NOT FOR CONSTRUCTION

G PDE=PUBLIC DRAINAGE EASEMENT

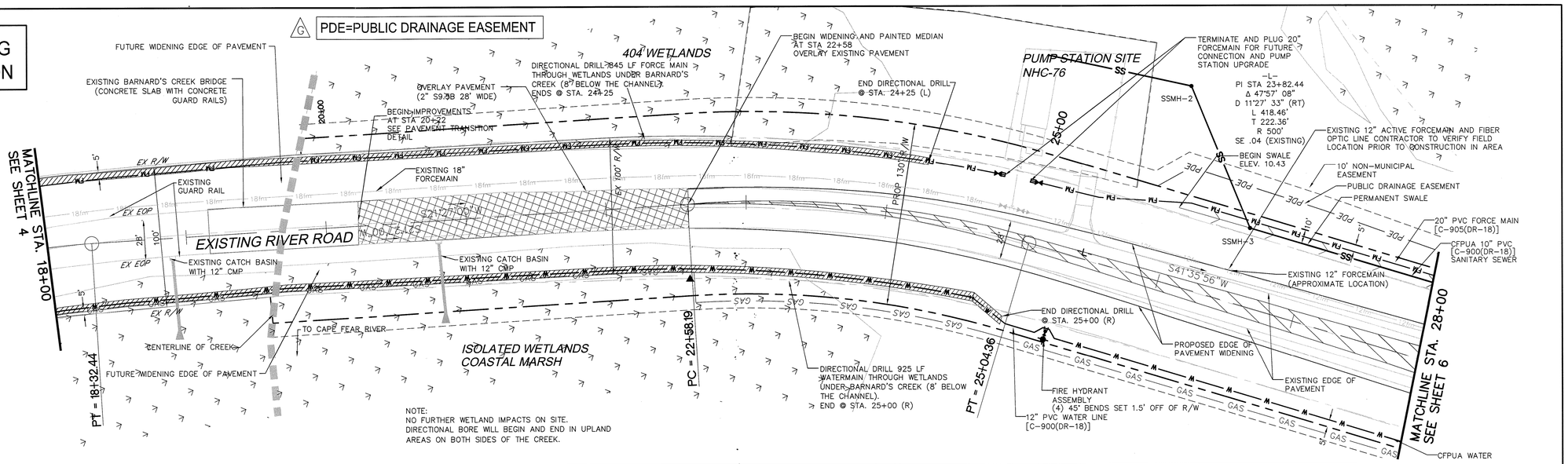

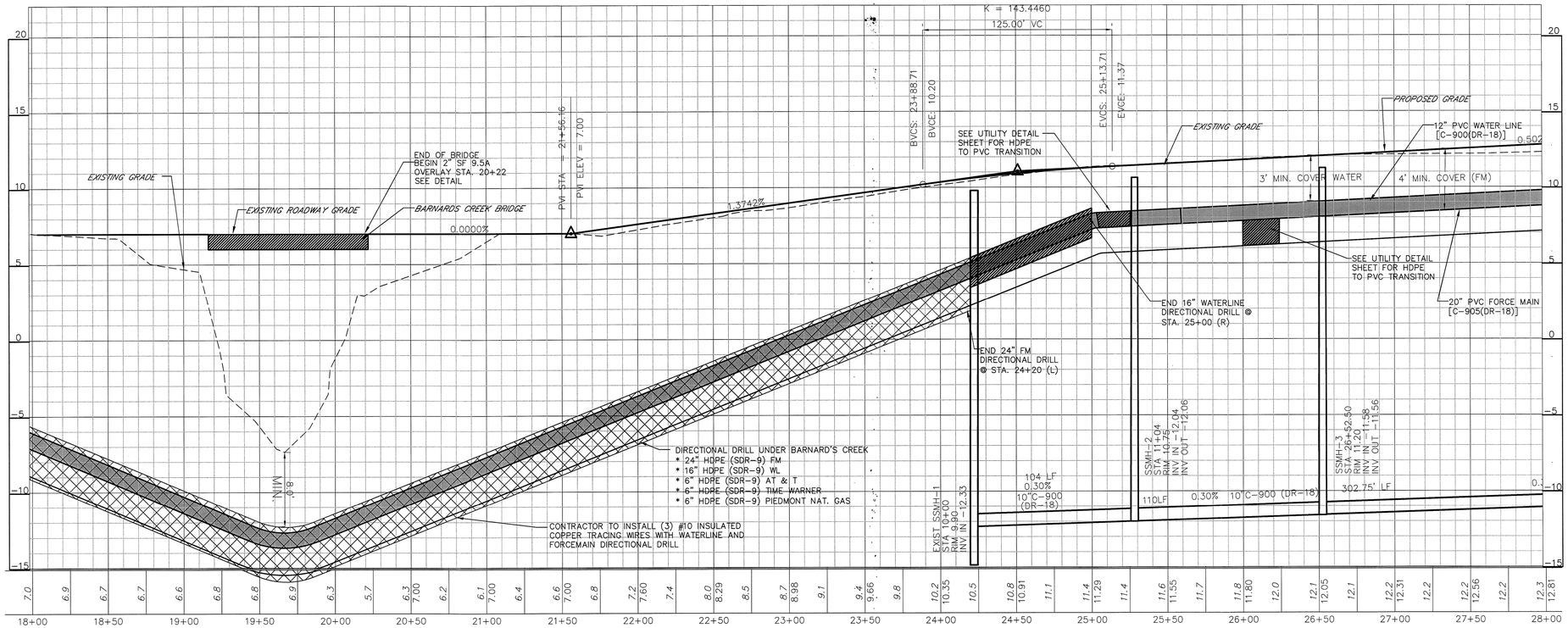

NOTE:
SEE SHEETS
EC-1 TO EC-4 EROSION CONTROL
PM-1 TO PM-8 PAVEMENT MARKINGS, MARKERS AND SIGNING
X-1 TO X-26 CROSS SECTIONS

NOTE:
SEE SHEET CT-503 FOR END WALL DETAIL.
PERMANENT SWALE LINES ARE SHOWN IN DIRECTION OF FLOW.

N
40' 0 40' 80
SCALE: 1"=40' (Horiz.)

REV.NO.	DESCRIPTIONS REVISIONS	DATE
G	REVISED PER DISTRICT NCDOT COMMENTS	10/14/08
	BULLETIN DRAWING	10/08/08
F	REVISED WATERLINE AND CROSS SECTIONS	09/03/08
E	REVISED PER NCDOT HYDRAULICS COMMENTS 07/15/08	07/28/08
D	REVISION 2 PLAN SET	07/09/08
	REVISED PER NCDOT ENCROACHMENT COMMENT	06/06/08
	REVISED PER NHC SEWER COMMENTS	3/28/08
	REVISED PER NCDOT COMMENTS	12/20/07
B	UPDATED UTILITIES PER NEW HANOVER COUNTY AND CITY OF WILMINGTON	11/24/07
A	SUBMITTAL FINAL DESIGN FOR NCDOT	06/27/07

SEAL

NORTH CAROLINA PROFESSIONAL SEAL 22574 ENGINEER RICHARD C. ODHIAMBO 10/14/08

McKIM&CREED
243 North Front Street
Wilmington, North Carolina 28401
Phone: (910)343-1048 , Fax: (910)251-8282
AA0002667 EB0006691
www.mckimcreed.com

Newland COMMUNITIES
AT THE HEART OF GREAT LIVING

RIVER ROAD

ROADWAY PLAN & PROFILE
RIVER ROAD
STA 18+00 – STA 28+00

DATE:	JUNE 2007
MCE PROJ. #	02735-0007
DRAWN	BCE
DESIGNED	BCE
CHECKED	RMC
PROJ. MGR.	RMC

SCALE
HORIZONTAL: 1"=40'
VERTICAL:

M&C FILE NUMBER CU-701
DRAWING NUMBER 5

STATUS: FINAL DESIGN PLANS
REVISION G

Wilmington

ISSUED FOR PERMITTING
NOT FOR CONSTRUCTION

G PDE=PUBLIC DRAINAGE EASEMENT

NOTE:
SEE SHEET CT-503 FOR END WALL DETAIL.
PERMANENT SWALE LINES ARE SHOWN IN DIRECTION OF FLOW.

SCALE: 1"=40' (Horiz.)

MATCHLINE STA. 28+00
SEE SHEET 5

MATCHLINE STA. 39+00
SEE SHEET 7

PROPOSED RIVER ROAD

70' DIRECTIONAL DRILL THROUGH WETLANDS 24" FM HDPE (SDR-9) BUTT-FUSE EACH END

230' RUNOFF
80% (184')
20% (46')
R=754'

10" PVC C-900(DR-18) SANITARY SEWER

PERMANENT SWALE

RIP-RAP OUTLET PROTECTION, D50=4"

EW-1

EW-2

PC = 32+57.98

20" PVC FORCE MAIN [C-905(DR-18)]

HIGH POINT SWALE ELEV. 9.54

PI STA = 43+09.87
Δ = 63°29' 43"
D = 03°22' 13" (LT)
L = 1883.94'
T = 1051.89'
R = 1700'
SE = 0.06
RO = 54'

10' NON-MUNICIPAL EASEMENT

PUBLIC DRAINAGE EASEMENT

DWQ WETLANDS FILL PERMIT 07-1335, 09/14/07

96 LF OF 8" PVC (C-900, DR-18) @ 0.45% SLOPE

ISOLATED WETLANDS

END SWALE ELEV. 7.45

DROP SSMH #8 (5' DIAMETER)

SSMH #7

SSMH #6

SSMH #5

SSMH #4

ISOLATED WETLANDS

END SWALE ELEV. 8.44

END SWALE ELEV. 7.35

DP-1
49LF, 24" RCP, CL III
INV IN: 9.27
INV OUT: 9.00

10" PVC [C-900(DR-18)] SANITARY SEWER

SSMH #8
RIM 11.70
INV OUT = 1.69

END SWALE ELEV. 7.61

12" GATE VALVE

8" GATE VALVE
2" BLOW OFF

12" X 8" TEE

1.5' MEDIAN CURB (TYP.)
12' TRAVEL LANE (TYP.)
4' BIKE LANE (TYP.)

END DIRECTIONAL DRILL STA 38+00

20 LF OF 8" PVC (C-900, DR-18) TERMINATE AND CAP MARK WITH 4" PVC PIPE FOR FUTURE CONNECTION SEE SHEET 6A

20LF 12" DIP (WL) WITH MJ'S

4' MANHOLE CONE SECTION RING AND COVER SET TO GRADE PLACED AROUND MARKER FOR PROTECTION

EXISTING PAVEMENT TO BE REMOVED

BEGIN DIRECTIONAL DRILL FOR WATERLINE STA 35+50

NOTE:
SEE SHEETS
EC-1 TO EC-8 EROSION CONTROL
PM-1 TO PM-8 PAVEMENT MARKINGS, MARKERS AND SIGNING
X-1 TO X-26 CROSS SECTIONS

EX R/W
EX EOP
PROP R/W
PROP EOP
130' R/W
79'
22'
NC
S41°35'56"W
12" PVC WATERLINE [C-900(DR-18)]
1.5' MEDIAN CURB (TYP.)
12' TRAVEL LANE (TYP.)
4' BIKE LANE
FIRE HYDRANT ASSEMBLY (4) 45° BENDS 1.5' OFF R/W (TYP)
10' NON-MUNICIPAL EASEMENT
12" PVC WATERLINE [C-900(DR-18)]
END EXISTING ROADWAY WIDENING AND OVERLAY BEGIN EXISTING PAVEMENT REMOVAL
EXISTING 12" ACTIVE FORCEMAIN AND FIBER OPTIC LINE CONTRACTOR TO VERIFY FIELD LOCATION PRIOR TO CONSTRUCTION IN AREA

HIGH POINT STA = 31+33.79
PVI STA = 31+50.00
PVI ELEV = 14.57
A.D. = -1.2829
K = 116.9246
150.00' VC

BVCS: 30+75.00
BVCE: 14.19
EVCS: 32+25.00
EVCE: 13.98

LOW POINT ELEV = 10.21
LOW POINT STA = 37+46.29
PVI STA = 37+35.61
PVI ELEV = 10.00
A.D. = 1.3401
K = 97.0096
130.00' VC

BVCS: 36+70.61
BVCE: 10.51
EVCS: 38+00.61
EVCE: 10.36

EXISTING GRADE
PROPOSED GRADE
12" PVC WATERLINE [C-900(DR-18)]
3' MIN. COVER WATER
-0.7801%
4' MIN. COVER (FM)
18" RCP @ 0.500%
18" RCP @ 0.5
RIP-RAP OUTLET PROTECTION, D50=4"
EW-3
PUBLIC DRAINAGE EASEMENT
PDE
CONTRACTOR TO INSTALL (3) #10 INSULATED COPPER TRACING WIRES WITH WATERLINE AND FOREMAIN DIRECTIONAL DRILL
250 LF DIRECTIONAL DRILL BELOW EXISTING RIVER ROAD ALIGNMENT
* 16"HDPE (SDR-9) WL
SEE DETAILS FOR HDPE TO PVC TRANSITION
SEE PLAN VIEW FOR SEWER DATA ON THIS SEWER RUN

STA 35+00.00
RIM = 12.16'
INV IN = 5.57'
INV OUT = 5.57'

STA 37+45.64
RIM = 10.61'
INV IN = 6.79'
INV OUT = 6.79'

SSMH-4
STA 29+45.24
RIM 12.84
INV IN = 0.45
INV OUT = 10.57

SSMH-5
STA 32+57.99
RIM 11.54
INV IN = 9.56
INV OUT = 9.56

SSMH-6
STA 34+38.30
RIM 11.54
INV IN = 8.94
INV OUT = 8.96

SSMH-7
STA 36+30.72
RIM 10.05
INV IN = 8.30
INV OUT = 8.32

SSMH-8 (5' DIA DROP MANHOLE)
STA 37+85.07 (RIVER ROAD)
STA 38+00.61 (MARINA VILLAGE)
RIM 10.36
INV IN = 2.01
INV IN = 7.79
INV OUT = 7.84

302.74' LF 0.30% 10"C-900 (DR-18)
175.00' LF 0.30% 10"C-900 (DR-18)
186.93' LF 0.30% 10"C-900 (DR-18)
149.77' LF 0.30% 10"C-900 (DR-18)
167.87LF @ 0.30% 10" C-9

LOCATION		RUNOFF								PIPE DESIGN						UPSTREAM	INLET	UPSTREAM
FROM	TO	D.A.(AC.)	CUM. D.A.(AC.)	CA	PIPE_L (FT)	INLET TIME	FLOW TIME	DESIGN TIME	INT I(IN/HR)	DISCH. Q (CFS)	INV IN (FT.)	INV OUT (FT.)	SLOPE (FT/FT)	DIA. (IN)	MAT.	CAP. (CFS)	RIM ELEV.	SPREAD (FT)	NCDOT STD. #
3	2	0.15	0.15	0.124	199	5.00	5.00	10.00	7.13	0.886	7.78	6.79	0.00500	18	C	13	11.03	3.68	840.17
2	1	0.34	0.48	0.409	243	5.00	5.45	10.45	7.04	2.882	6.79	5.57	0.00500	18	C	13	10.61	1.77	840.01
1	EW-3	0.11	0.59	0.499	274	5.00	6.00	11.00	6.94	3.465	5.57	4.00	0.00573	18	C	13	12.16	2.44	840.01

28+00 28+50 29+00 29+50 30+00 30+50 31+00 31+50 32+00 32+50 33+00 33+50 34+00 34+50 35+00 35+50 36+00 36+50 37+00 37+50 38+00 38+50 39+00

REV.NO.	DESCRIPTIONS REVISIONS	DATE
G	REVISE PER DISTRICT NCDOT COMMENTS	10/14/08
	BULLETIN DRAWING	10/08/08
F	REVISED WATERLINE AND CROSS SECTIONS	09/03/08
E	REVISED PER NCDOT HYDRAULICS COMMENTS 07/15/08	07/28/08
D	REVISION 2 PLAN SET	06/26/08
	REVISED PER NCDOT ENCROACHMENT COMMENTS	06/13/06
	REVISED PER NHC SEWER COMMENTS	3/28/08
C	REVISED PER NCDOT COMMENTS	12/20/07
B	UPDATED UTILITIES PER NEW HANOVER COUNTY AND CITY OF WILMINGTON	11/24/07
A	SUBMITTAL OF FINAL DESIGN PLANS TO NCDOT	06/27/07

SEAL

SEAL
22574
ENGINEER
RICHARD M. CULLER
10/14/08

McKIM&CREED
243 North Front Street
Wilmington, North Carolina 28401
Phone: (910)343-1048 , Fax: (910)251-8282
AA0002667 EB0006691
www.mckimcreed.com

Newland COMMUNITIES
AT THE HEART OF GREAT LIVING

RIVER ROAD

ROADWAY PLAN & PROFILE
RIVER ROAD
STA 28+00 – STA 39+00

DATE: JUNE 2007
MCE PROJ. # 02735-0007
DRAWN BCE
DESIGNED BCE
CHECKED RMC
PROJ. MGR. RMC

SCALE
HORIZONTAL: 1"=40'
VERTICAL: 1"=4'

M&C FILE NUMBER CU-702
DRAWING NUMBER 6

STATUS: FINAL DESIGN PLANS
REVISION G

S:\27350007\60-Drawings\CU702-027350007.dwg, CU-702, 10/14/2008 3:33:28 PM, behrington

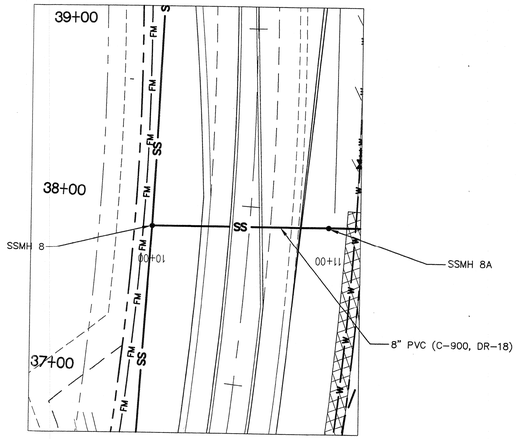

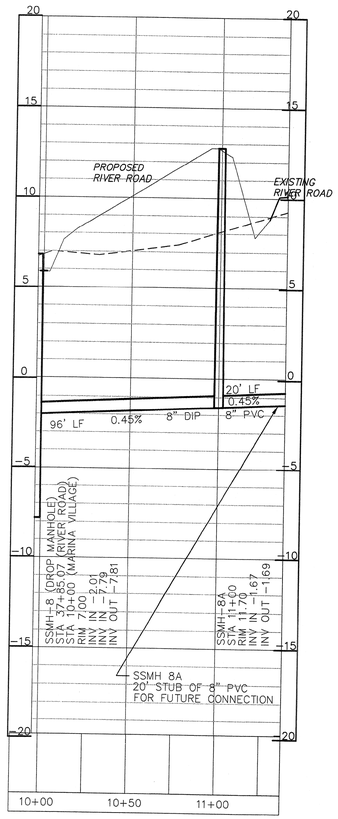

NOT FOR CONSTRUCTION

ISSUED FOR PERMITTING

REV.NO.	DESCRIPTIONS	DATE
	REVISIONS	
F	REVISED WATERLINE AND CROSS SECTIONS	09/08/08
E	REVISED PER NCDOT HYDRAULICS COMMENTS 07/15/08	07/28/08
D	REVISION 2 PLANS	07/09/08

SEAL

SEAL

NORTH CAROLINA PROFESSIONAL SEAL 22574 ENGINEER RICHARD M. KELLER
09/08/08

McKIM&CREED
243 North Front Street
Wilmington, North Carolina 28401
Phone: (910)343-1048 , Fax: (910)251-8282
AA0002667 EB0006691
www.mckimcreed.com

Newland® COMMUNITIES
AT THE HEART OF GREAT LIVING

MARINA VILLAGE CONNECTION

PLAN AND PROFILE

DATE:	JUNE 2008
MCE PROJ. #	2735-0007
DRAWN	BCE
DESIGNED	BCE
CHECKED	RMC
PROJ. MGR.	RMC

SCALE
HORIZONTAL: 1"=40'
VERTICAL: 1"=4'

M&C FILE NUMBER
CU-702A
DRAWING NUMBER
6A

STATUS: FINAL DESIGN PLANS
REVISION F

ISSUED FOR PERMITTING
NOT FOR CONSTRUCTION

PDE=PUBLIC DRAINAGE EASEMENT

NOTE:
SEE SHEET CT-503 FOR END WALL DETAIL.
PERMANENT SWALE LINES ARE SHOWN IN DIRECTION OF FLOW.

NOTE: TRANSITION SUPER ELEVATION RATES AT 38.33' PER PERCENT CHANGE FROM E=06 AT 44+00.00 TO NORMAL CROWN 47+00

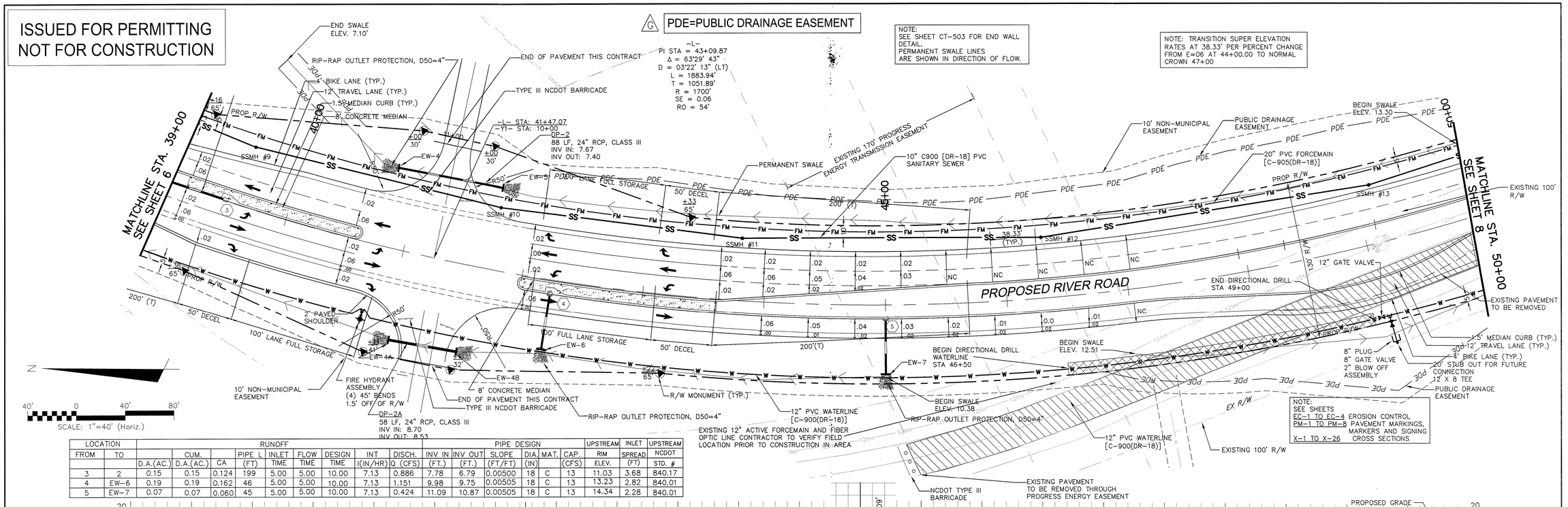

NOTE:
SEE SHEETS
EC-1 TO EC-4 EROSION CONTROL
PM-1 TO PM-8 PAVEMENT MARKINGS, MARKERS AND SIGNING
X-1 TO X-26 CROSS SECTIONS

LOCATION		RUNOFF								PIPE DESIGN						UPSTREAM	INLET	UPSTREAM
FROM	TO		CUM.		PIPE L	INLET	FLOW	DESIGN	INT	DISCH.	INV IN	INV OUT	SLOPE	DIA.	MAT.	CAP.	RIM	SPREAD	NCDOT
		D.A.(AC.)	D.A.(AC.)	CA	(FT)	TIME	TIME	TIME	I(IN/HR)	Q (CFS)	(FT.)	(FT.)	(FT/FT)	(IN)		(CFS)	ELEV.	(FT)	STD. #
3	2	0.15	0.15	0.124	199	5.00	5.00	10.00	7.13	0.886	7.78	6.79	0.00500	18	C	13	11.03	3.68	840.17
4	EW-6	0.19	0.19	0.162	46	5.00	5.00	10.00	7.13	1.151	9.98	9.75	0.00505	18	C	13	13.23	2.82	840.01
5	EW-7	0.07	0.07	0.060	45	5.00	5.00	10.00	7.13	0.424	11.09	10.87	0.00505	18	C	13	14.34	2.28	840.01

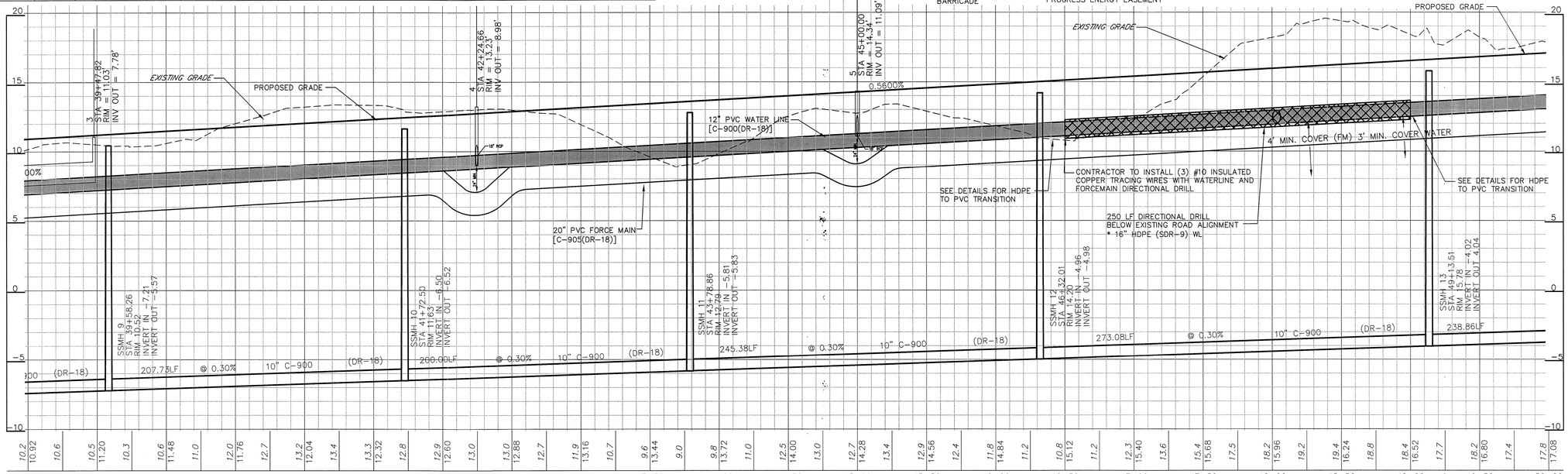

REV.NO.	DESCRIPTIONS	DATE
G	REVISED PER DISTRICT NCDOT COMMENTS	10/14/08
	BULLETIN DRAWING	10/08/08
F	REVISED WATERLINE AND CROSS SECTIONS	09/03/08
E	REVISED PER NCDOT HYDRAULICS COMMENTS 07/15/08	07/28/08
D	REVISION 2 PLAN SET	06/26/08
	REVISED PER NCDOT ENCROACHMENT COMMENTS	06/13/08
	REVISED PER NHC SEWER COMMENTS	3/28/08
	REVISED PER NCDOT COMMENTS	12/20/07
B	UPDATED UTILITIES PER NEW HANOVER COUNTY AND CITY OF WILMINGTON	11/24/07
A	SUBMITTAL OF FINAL DESIGN PLANS NCDOT	06/27/07

REVISIONS

SEAL

SEAL
NORTH CAROLINA PROFESSIONAL SEAL 22574 ENGINEER RICHARD M. MCDUFFIE

McKIM & CREED
243 North Front Street
Wilmington, North Carolina 28401
Phone: (910)343-1048 , Fax: (910)251-8282
AA0002667 EB0006691
www.mckimcreed.com

Newland COMMUNITIES
AT THE HEART OF GREAT LIVING

RIVER ROAD

ROADWAY PLAN & PROFILE
RIVER ROAD
STA 39+00 – STA 50+00

DATE:	JUNE 2007
MCE PROJ. #	02735-0007
DRAWN	BCE
DESIGNED	BCE
CHECKED	RMC
PROJ. MGR.	RMC

SCALE
HORIZONTAL: 1"=40'
VERTICAL: 1"=4'

M&C FILE NUMBER CU-703
DRAWING NUMBER 7

STATUS: FINAL DESIGN PLANS
REVISION G

S:\2735\0007\03-Drawings\CU703-02735007.dwg, CU-703, 10/14/2008 11:25:49 AM, belvington

G PDE=PUBLIC DRAINAGE EASEMENT

ISSUED FOR PERMITTING
NOT FOR CONSTRUCTION

MATCHLINE STA. 50+00
SEE SHEET 7

MATCHLINE STA. 61+00
SEE SHEET 9

20" PVC FORCE MAIN [C-905(DR-18)]

PERMANENT CULVERT #1
36" RCP, CLASS III 113LF
INV IN: 9.23
INV OUT: 8.67

END SWALE
ELEV. 9.23

PT = 51+41.92

-L-
PI STA = 43+09.87
Δ = 63°29' 43"
D = 03°22' 13" (LT)
L = 1883.94'
T = 1051.89'
R = 1700'
SE = 0.06
RO = 54'

NOTE:
SEE SHEET CT-503 FOR END WALL DETAIL.
PERMANENT SWALE LINES ARE SHOWN IN DIRECTION OF FLOW.

PUBLIC DRAINAGE EASEMENT

PERMANENT SWALE

-L- STA: 52+41.87
-Y2- STA: 10+00

RIP-RAP OUTLET PROTECTION, D50=8"

PERMANENT CULVERT #2
36" RCP, CLASS III 115LF
INV IN: 11.61
INV OUT: 11.03

12" PVC WATERLINE [C-900(DR-18)]

FIRE HYDRANT ASSEMBLY (TYP.)
(4) 45°BENDS
1.5' OFF OF R/W

END OF SWALE
ELEV. 8.67

RIP-RAP OUTLET PROTECTION, D50=4"

22.5° BEND

PAVEMENT REMOVAL

EW-8

EW-9

EW-10

SSMH #14

SSMH #15

EX R/W

PROP R/W

PROP R/W (LT)

PROP R/W (RT)

PDE

FM

W

NC

S82°18'19"E

S

N

22.5°BEND

11.25°BEND

10" PVC C-900(DR-18) SANITARY SEWER

205+12"DIP CL 51 (WL) WITH MJ'S

END SWALE
ELEV. 15.28

INSTALL 20 LF OF 10" C900 [DR-18] PVC SANITARY SEWER LINE.
TERMINATE AND PLUG 10" PVC SEWER.
STUB UP FOR FUTURE CONNECTION.
PLACE MANHOLE CONE AROUND STUBBED PIPE TO PROTECT.

PROPOSED RIVER ROAD

PUBLIC DRAINAGE EASEMENT

R/W MONUMENT (TYP.)

1.5' MEDIAN CURB (TYP.)
12' TRAVEL LANE (TYP.)
4' BIKE LANE (TYP.)

NCDOT TYPE III BARRICADE (TYP)

END OF PAVEMENT THIS CONTRACT

DP-3
62 LF, 30" RCP, CLASS III
INV IN: 16.61
INV OUT: 16.43

RIP-RAP OUTLET PROTECTION, D50=8"

EW-11

EW-12

12" PVC WATERLINE [C-900(DR-18)]

FIRE HYDRANT ASSEMBLY (TYP.)
(4) 45°BENDS
1.5' OFF OF R/W

PUBLIC DRAINAGE EASEMENT

1.5' MEDIAN CURB (TYP.)
12' TRAVEL LANE (TYP.)
4' BIKE LANE (TYP.)

200' TAPER

40' 0 40' 80'
SCALE: 1"=40' (Horiz.)

12" X 8" TEE
12" GATE VALVE

8" GATE VALVE

11.25° BEND
45° BEND

8" PLUG FOR
FUTURE CONNECTION
END PAVEMENT CONSTRUCTION

45°BEND

NCDOT TYPE III BARRICADE

2" BLOW-OFF ASSEMBLY

PVI STA = 52
PVI ELEV = 11

NOTE:
SEE SHEETS
EC-1 TO EC-4 EROSION CONTROL
PM-1 TO PM-8 PAVEMENT MARKINGS, MARKERS AND SIGNING
X-1 TO X-26 CROSS SECTIONS

PROPOSED GRADE

EXISTING GRADE

0.56%

0.61%

4' MIN. COVER (FM)

3' MIN. COVER WATER

8" LATERAL STUB OUT FOR FUTURE

20" PVC FORCE MAIN [C-905(DR-18)]

12" PVC WATERLINE [C-900(DR-18)]

6 STA 53+41.00
RIM = 23.61'
INV OUT = 11.61'

7 STA 61+81.98
RIM = 23.61'
INV OUT = 20.44'

DRAINAGE AREA: 10.80 AC
DESIGN FREQUENCY: 50-YR
DESIGN DISCHARGE: 19.43 CFS
DESIGN H.W. ELEV.: 11.14
Q100 DISCHARGE: 22.58
Q100 ELEV.: 11.30
OVERTOPPING FREQ.: > 500 YR
OVERTOPPING DISCH.: 78.75 CFS
OVERTOPPING ELEV.: 16.10

SSMH 14
STA 51+58.95
RIM = 17.45
INVERT IN -3.20
INVERT OUT -3.22

194.39 LF @ 0.30% 10" C-900 (DR-18)

@ 0.30% 10" C-900 (DR-18)

SSMH 15
STA 53+20.73
RIM = 18.31
INVERT OUT -2.86

20 LF

DRAINAGE AREA: 10.63 AC
DESIGN FREQUENCY: 50-YR
DESIGN DISCHARGE: 18.87 CFS
DESIGN H.W. ELEV.: 13.47
Q100 DISCHARGE: 21.93
Q100 ELEV.: 13.63
OVERTOPPING FREQ.: > 500 YR
OVERTOPPING DISCH.: 75.14 CFS
OVERTOPPING ELEV.: 18.00

LOCATION		RUNOFF									PIPE DESIGN						UPSTREAM	INLET	UPSTREAM
FROM	TO		CUM.		PIPE L	INLET	FLOW	DESIGN	INT	DISCH.	INV IN	INV OUT	SLOPE	DIA.	MAT.	CAP.	RIM	SPREAD	NCDOT
		D.A.(AC.)	D.A.(AC.)	CA	(FT)	TIME	TIME	TIME	I(IN/HR)	Q (CFS)	(FT.)	(FT.)	(FT/FT)	(IN)		(CFS)	ELEV.	(FT)	STD. #
6	EW-10	10.63	10.63	9.036	115	(SEE PERMANENT CULVERT CHARTS)				18.870	11.61	11.03	0.00504	36	C	64	15.28	10.92	840.19
7	8	0.08	0.08	0.067	111	5.00	5.00	10.00	7.13	0.476	20.45	19.89	0.00505	18	C	13	23.61	5.21	840.17

REV.NO.	DESCRIPTIONS	DATE
G	REVISED PER DISTRICT NCDOT COMMENTS	10/14/08
	BULLETIN DRAWING	10/08/08
F	REVISED WATERLINE AND CROSS SECTIONS	09/03/08
E	REVISED PER NCDOT HYDRAULICS COMMENTS 07/15/08	07/28/08
D	REVISION 2 PLAN SET	06/26/08
	REVISED PER NHC ENCROACHMENT COMMENTS	06/13/08
	REVISED PER NHC SEWER COMMENTS	3/28/08
	REVISED PER NCDOT COMMENTS	12/20/07
B	UPDATED UTILITIES PER NEW HANOVER COUNTY AND CITY OF WILMINGTON	10/5/07
A	SUBMITTAL O FINAL DESIGN PLANS TO NCDOT	06/27/07

REVISIONS

SEAL

SEAL
NORTH CAROLINA PROFESSIONAL SEAL 22574 ENGINEER
ROBINSON, C. LEE
10/14/08

McKIM&CREED
243 North Front Street
Wilmington, North Carolina 28401
Phone: (910)343-1048 , Fax: (910)251-8282
AA0002667 EB0006691
www.mckimcreed.com

Newland COMMUNITIES
AT THE HEART OF GREAT LIVING

RIVER ROAD

ROADWAY PLAN AND PROFILE
RIVER ROAD
STA 50+00 – STA 61+00

DATE:	JUNE 2007
MCE PROJ. #	02735-0007
DRAWN	ASA
DESIGNED	PS
CHECKED	RMC
PROJ. MGR.	RMC

SCALE
HORIZONTAL: 1"=40'
VERTICAL: 1"=4'

M&C FILE NUMBER CU-704
DRAWING NUMBER 8

STATUS: FINAL DESIGN PLANS
REVISION G

bshington

G PDE=PUBLIC DRAINAGE EASEMENT

ISSUED FOR PERMITTING
NOT FOR CONSTRUCTION

-L-
PI STA = 64+33.92
Δ = 12°43' 39"
D = 03°22' 13" (RT)
L = 377.63'
T = 189.60'
R = 1700'
SE = 0.06
RO = 54'

NOTE:
SEE SHEET CT-503 FOR END WALL DETAIL.
PERMANENT SWALE LINES ARE SHOWN IN DIRECTION OF FLOW.

NOTE:
SEE SHEETS
EC-1 TO EC-4 EROSION CONTROL
PM-1 TO PM-8 PAVEMENT MARKINGS, MARKERS AND SIGNING
X-1 TO X-26 CROSS SECTIONS

MATCHLINE STA. 61+00
SEE SHEET 8

MATCHLINE STA. 72+00
SEE SHEET 10

PROPOSED RIVER ROAD -L-

S69°34'40"E

PC = 62+44.33

PT = 66+21.96

8" PLUG
2" BLOW OFF

TYPE III BARRICADE

DP-5
62 LF, 24" RCP, CLASS III
INV IN: 23.34
INV OUT: 20.00

2' PAVED SHOULDER

BEGIN SWALE
ELEV. 23.76

-L- STA: 63+31.07
-Y5- STA: 10+00

AIR RELEASE VALVE
STA. 65+00 (L)
5' DIAMETER SSMH

PERMANENT SWALE

END SWALE
ELEV. 20.00

PERMANENT DRAINAGE EASEMENT

RIP-RAP OUTLET PROTECTION, D50=4"
50' X 200' SIGHT DISTANCE TRIANGLE

EW-16

20" PVC FORCE MAIN [C-905(DR-18)]

PROP R/W

100' FULL STORAGE

50' DECEL

200' TAPER

8' CONCRETE MEDIAN

12" X 8" CROSS
(2) 8" GATE VALVES
(1) 12" GATE VALVE

EW-17

EW-18

EW-18A

EW-19

EW-13

EW-14

EW-15

RIP-RAP OUTLET PROTECTION, D50=4"

RIP-RAP OUTLET PROTECTION, D50=8"

DP-4
62 LF, 30" RCP, CLASS III
INV IN: 18.20
INV OUT: 18.01

8" PLUG
2" BLOW OFF

R/W MONUMENT (TYP.)

12" PVC WATERLINE [C-900(DR-18)]

10' NON-MUNICIPAL EASEMENT

10' NON MUNICIPAL EASEMENT

PC-3
124 LF, 30" RCP, CLASS III
INV IN: 20.00
INV OUT: 19.36

BEGIN SWALE
ELEV. 22.00

PUBLIC DRAINAGE EASEMENT

20" PVC FORCE MAIN [C-905(DR-18)]

1.5' MEDIAN CURB (TYP.)
12' TRAVEL LANE (TYP.)
4' BIKE LANE (TYP.)

FIRE HYDRANT ASSEMBLY (TYP.)
(4) 45° BENDS
1.5' OFF OF R/W

12" PVC WATERLINE [C-900(DR-18)]

20' MEDIAN (TYP.)

130' R/W

65'

50'

SCALE: 1"=40' (Horiz.)

8+00

PROPOSED GRADE

EXISTING GRADE

RCP @ 0.505%

18" RCP @ 1.001%

24" RCP

30" RCP

AIR RELEASE VALVE
STA 65+00 (L)
5' DIAMETER SSMH

8 STA 61+96.79
RIM = 27.67
INV OUT = 19.89'
INV OUT = 19.89'

9 STA 64+00.00
RIM = 25.42'
INV IN = 21.35'
INV OUT = 21.35'

10 STA 65+40.10
RIM = 26.28'
INV OUT = 22.03'

3' MIN. COVER WATER

4' MIN. COVER (FM)

PC-3
30" RCP
INV = 19.55'

DRAINAGE AREA: 7.32 AC
DESIGN FREQUENCY: 50-YR
DESIGN DISCHARGE: 7.40 CFS
DESIGN H.W. ELEV.: 21.35
Q100 DISCHARGE: 8.00
Q100 ELEV.: 21.36
OVERTOPPING FREQ.: > 500 YR
OVERTOPPING DISCH.: 60.39 CFS
OVERTOPPING ELEV.: 27.80

12" PVC WATERLINE [C-900(DR-18)]

20" PVC FORCE MAIN [C-905(DR-18)]

8" LATERAL FOR FUTURE

DROP 8" PVC WATER LINE AT FORCE MAIN CROSSING. MAINTAIN 18" CLEARANCE BETWEEN PIPES. INSTALL DIP 10' EACH SIDE OF CROSSING FOR BOTH FORCE MAIN AND WATER LINE. NO JOINTS WITHIN 8' OF CROSSING. SEE STANDARD VERTICAL BEND DETAIL.

LOCATION		RUNOFF									PIPE DESIGN						UPSTREAM	INLET	UPSTREAM
FROM	TO	D.A.(AC.)	CUM. D.A.(AC.)	CA	PIPE L (FT)	INLET TIME	FLOW TIME	DESIGN TIME	INT I(IN/HR)	DISCH. Q (CFS)	INV IN (FT.)	INV OUT (FT.)	SLOPE (FT/FT)	DIA. (IN)	MAT.	CAP. (CFS)	RIM ELEV.	SPREAD (FT)	NCDOT STD. #
7	8	0.08	0.08	0.067	111	5.00	5.00	10.00	7.13	0.476	20.45	19.89	0.00505	18	C	13	23.61	5.21	840.17
8	EW-13	0.05	0.13	0.109	65	5.00	5.25	10.25	7.09	0.772	19.89	18.88	0.01554	24	C	25	24.56	1.72	840.17
10	9	0.15	0.15	0.128	136	5.00	5.00	10.00	7.13	0.914	22.03	21.35	0.00501	18	C	13	26.28	4.94	840.17
9	EW-18	0.14	0.29	0.249	52	5.00	5.31	10.31	7.07	1.757	21.35	19.54	0.03481	18	C	13	25.42	4.77	840.17

REV.NO.	DESCRIPTIONS REVISIONS	DATE
G	REVISED PER DISTRICT NCDOT COMMENTS	10/14/08
	BULLETIN DRAWING	10/08/08
F	REVISED WATERLINE AND CROSS SECTIONS	09/03/08
E	REVISED PER NCDOT HYDRAULICS COMMENTS 07/15/08	07/28/08
D	REVISION 2 PLAN SET	06/26/08
	REVISED PER NCDOT ENCROACHMENT COMMENTS	6/13/08
	REVISED PER NHC SEWER COMMENTS	3/28/08
	REVISED PER NCDOT COMMENTS	12/20/07
B	UPDATED UTILITIES PER NEW MANOVER COUNTY AND CITY OF WILMINGTON	11/24/07
A	SUBMITTAL OF FINAL DESIGN PLANS TO NCDOT	06/27/07

SEAL

SEAL
NORTH CAROLINA PROFESSIONAL SEAL 22574 ENGINEER RICHARD M. COLLIER
10/17/08

McKIM & CREED
243 North Front Street
Wilmington, North Carolina 28401
Phone: (910)343-1048 , Fax: (910)251-8282
AA0002667 EB0006691
www.mckimcreed.com

Newland COMMUNITIES
AT THE HEART OF GREAT LIVING

RIVER ROAD

ROADWAY PLAN & PROFILE
PROPOSED RIVER ROAD
STA 61+00 – STA 72+00

DATE: JUNE 2007
MCE PROJ. # 02735-0007
DRAWN ASA
DESIGNED JPS
CHECKED RMC
PROJ. MGR. RMC

SCALE
HORIZONTAL: 1"=40'
VERTICAL: 1"=4'

M&C FILE NUMBER CU-705
DRAWING NUMBER 9

STATUS: FINAL DESIGN PLANS
REVISION G

S:\27350\00\07\80-Drawings\CU705-027350007.dwg, CU-705, 10/14/2008 11:46:49 AM, bellvington

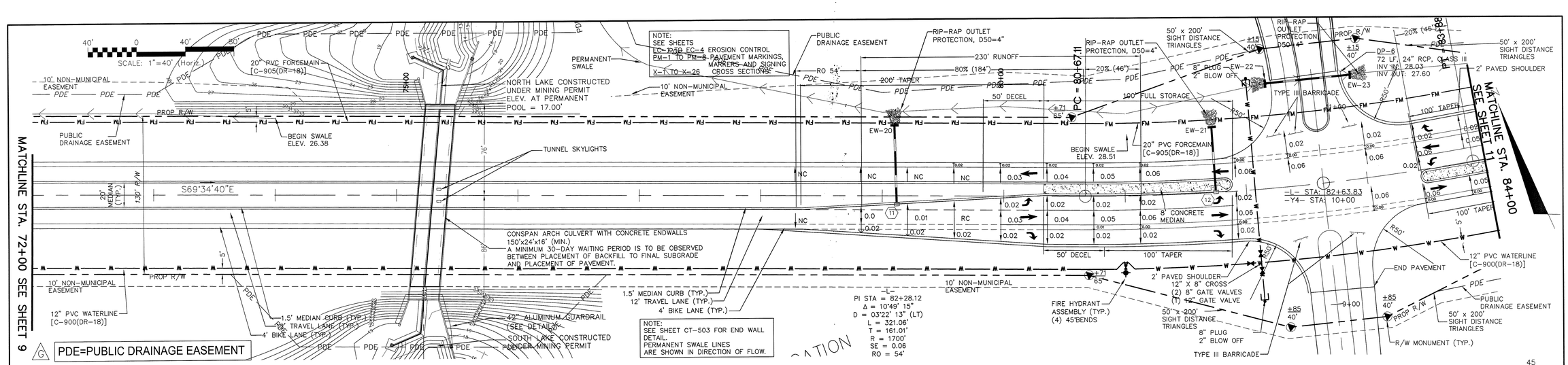

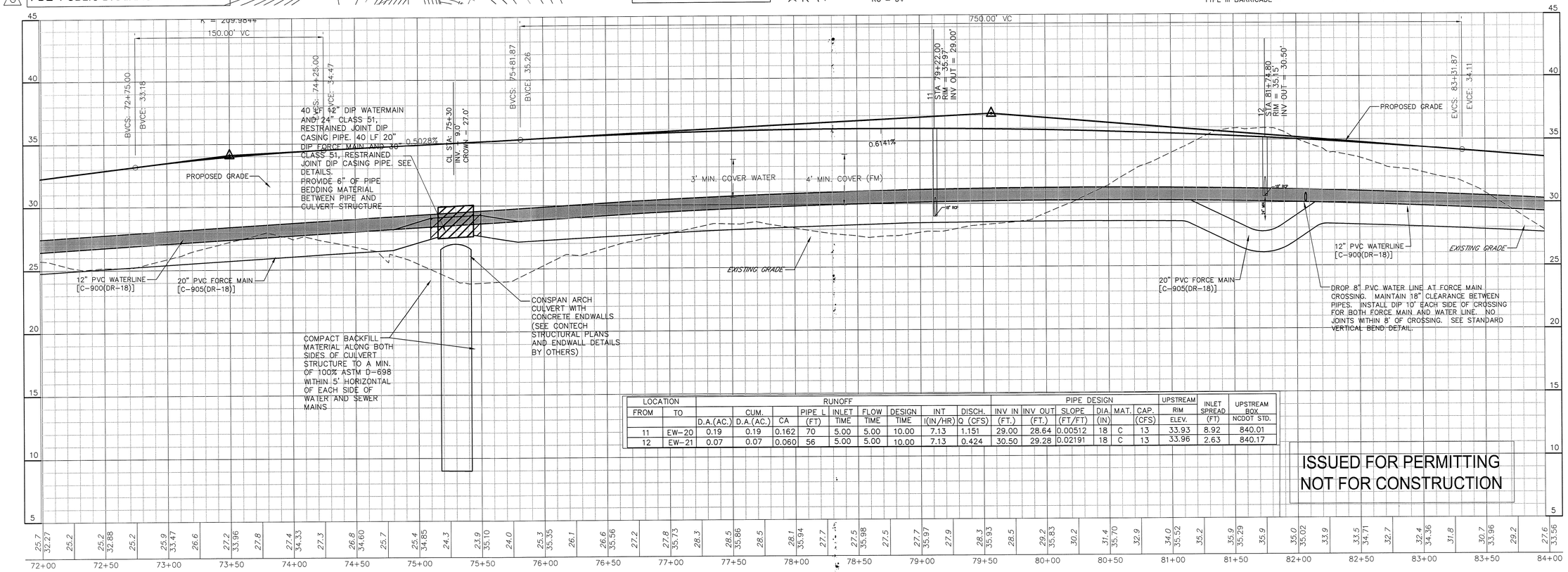

LOCATION		RUNOFF								PIPE DESIGN						UPSTREAM		
FROM	TO		CUM.		PIPE L	INLET	FLOW	DESIGN	INT	DISCH.	INV IN	INV OUT	SLOPE	DIA.	MAT.	CAP.	RIM	INLET SPREAD	UPSTREAM BOX
		D.A.(AC.)	D.A.(AC.)	CA	(FT)	TIME	TIME	TIME	I(IN/HR)	Q (CFS)	(FT.)	(FT.)	(FT/FT)	(IN)		(CFS)	ELEV.	(FT)	NCDOT STD.
11	EW-20	0.19	0.19	0.162	70	5.00	5.00	10.00	7.13	1.151	29.00	28.64	0.00512	18	C	13	33.93	8.92	840.01
12	EW-21	0.07	0.07	0.060	56	5.00	5.00	10.00	7.13	0.424	30.50	29.28	0.02191	18	C	13	33.96	2.63	840.17

ISSUED FOR PERMITTING
NOT FOR CONSTRUCTION

REV.NO.	DESCRIPTIONS	DATE
	REVISIONS	
G	REVISED PER DISTRICT NCDOT COMMENTS	10/14/08
	BULLETIN DRAWING	10/08/08
F	REVISED WATERLINE AND CROSS SECTIONS	09/03/08
E	REVISED PER NCDOT HYDRAULICS COMMENTS 07/15/08	07/28/08
D	REVISION 2 PLANS	07/09/08
	REVISED PER NCDOT ENCROACHMENT COMMENTS	6/13/08
	REVISED PER NHC SEWER COMMENTS	3/28/08
C	REVISED PER NCDOT COMMENTS	12/20/07
B	UPDATED UTILITIES PER NEW HANOVER COUNTY AND CITY OF WILMINGTON	11/24/07
A	SUBMITTAL OF FINAL DESIGN PLANS TO NCDOT	06/27/07

SEAL

SEAL
NORTH CAROLINA PROFESSIONAL SEAL 22574 ENGINEER RICHARD M. MOLLER

McKIM&CREED
243 North Front Street
Wilmington, North Carolina 28401
Phone: (910)343-1048 , Fax: (910)251-8282
AA0002667 EB0006691
www.mckimcreed.com

Newland® COMMUNITIES
AT THE HEART OF GREAT LIVING

RIVER ROAD

ROADWAY PLAN & PROFILE PROPOSED RIVER ROAD STA 72+00 – STA 84+00

DATE:	JUNE 2007
MCE PROJ. #	02735-0007
DRAWN	BCE
DESIGNED	BCE
CHECKED	RMC
PROJ. MGR.	RMC

SCALE
HORIZONTAL: 1"=40'
VERTICAL: 1"=4'

M&C FILE NUMBER CU-706
DRAWING NUMBER 10

STATUS: FINAL DESIGN PLANS
REVISION G

S:\2735\0007\80-Drawings\CU706-027350007.dwg, CU-703, 10/14/2008 12:01:39 PM, bellington

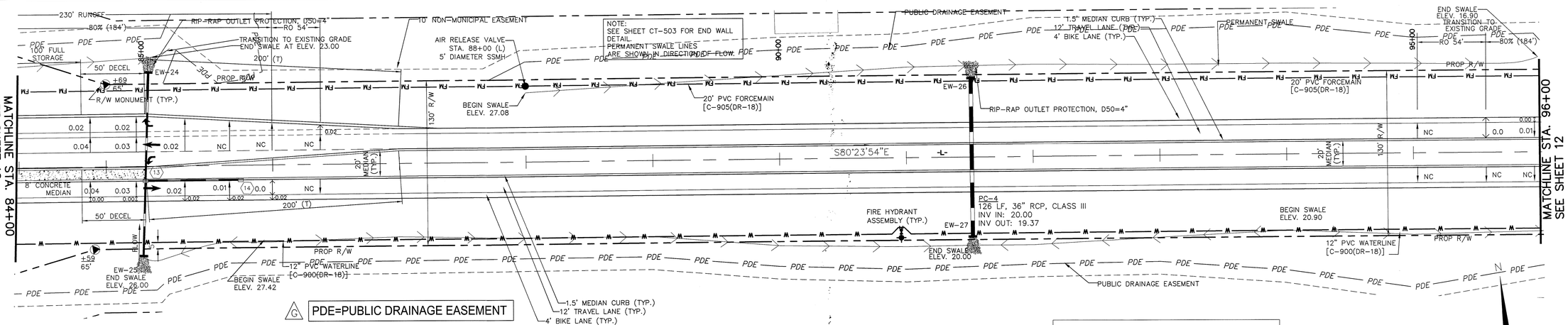

NOTE:
SEE SHEETS
EC-1 TO EC-4 EROSION CONTROL
PM-1 TO PM-8 PAVEMENT MARKINGS, MARKERS AND SIGNING
X-1 TO X-26 CROSS SECTIONS

LOCATION		RUNOFF									PIPE DESIGN						UPSTREAM INLET	INLET SPREAD	UPSTREAM BOX
FROM	TO	D.A.(AC.)	CUM. D.A.(AC.)	CA	PIPE L (FT)	INLET TIME	FLOW TIME	DESIGN TIME	INT I(IN/HR)	DISCH. Q (CFS)	INV IN (FT.)	INV OUT (FT.)	SLOPE (FT/FT)	DIA. (IN)	MAT.	CAP. (CFS)	ELEV.	(FT)	NCDOT STD.
EW-25	13	0.46	0.46	0.391	69	5.00	5.00	10.00	7.13	2.788	26.00	25.65	0.00510	18	C	13	32.87	2.83	N/A
14	13	0.07	0.53	0.451	96	5.00	5.16	10.16	7.10	3.198	28.44	25.65	0.02899	18	C	13	31.69	0.00	840.01
13	EW-24	0.11	0.64	0.544	95	5.00	5.37	10.37	7.06	3.840	25.65	23.00	0.02783	18	C	13	32.87	2.83	840.01

ISSUED FOR PERMITTING
NOT FOR CONSTRUCTION

40' 0 40' 80'
SCALE: 1"=40' (Horiz.)

PROPOSED RIVER ROAD

REV.NO.	DESCRIPTIONS	DATE
	REVISIONS	
G	REVISED PER DISTRICT NCDOT COMMENTS	10/14/08
	BULLETIN DRAWING	10/08/08
F	REVISED WATERLINE AND CROSS SECTIONS	09/03/08
E	REVISED PER NCDOT HYDRAULICS COMMENTS 07/15/08	07/28/08
D	REVISION 2 PLANS	07/09/08
	REVISED PER NCDOT ENCROACHMENT COMMENTS	6/13/08
	REVISED PER NHC SEWER COMMENTS	3/28/08
C	REVISED PER NCDOT COMMENTS	12/20/07
B	UPDATED UTILITIES PER NEW HANOVER COUNTY AND CITY OF WILMINGTON	11/24/07
A	SUBMIT FINAL DESIGN PLANS TO NCDOT	06/27/07

SEAL

SEAL
NORTH CAROLINA PROFESSIONAL SEAL 22574 ENGINEER RICHARD M. COLLIER
10/17/08

McKIM & CREED
243 North Front Street
Wilmington, North Carolina 28401
Phone: (910)343-1048 , Fax: (910)251-8282
AA0002667 EB0006691
www.mckimcreed.com

Newland COMMUNITIES
AT THE HEART OF GREAT LIVING

RIVER ROAD

ROADWAY PLAN & PROFILE
PROPOSED RIVER ROAD
STA 84+00 – STA 96+00

DATE:	JUNE 2007
MCE PROJ. #	02735-0007
DRAWN	BCE
DESIGNED	BCE
CHECKED	RMC
PROJ. MGR.	RMC

SCALE
HORIZONTAL: 1"=40'
VERTICAL: 1" = 4'

M&C FILE NUMBER CU-707
DRAWING NUMBER 11

STATUS: FINAL DESIGN PLANS
REVISION G

S:\27350007\80-Drawings\CU707-027350007.dwg, CU-707, 10/14/2008 12:11:31 PM, bwhington

G PDE=PUBLIC DRAINAGE EASEMENT

NOTE:
SEE SHEET CT-503 FOR END WALL DETAIL.
PERMANENT SWALE LINES ARE SHOWN IN DIRECTION OF FLOW.

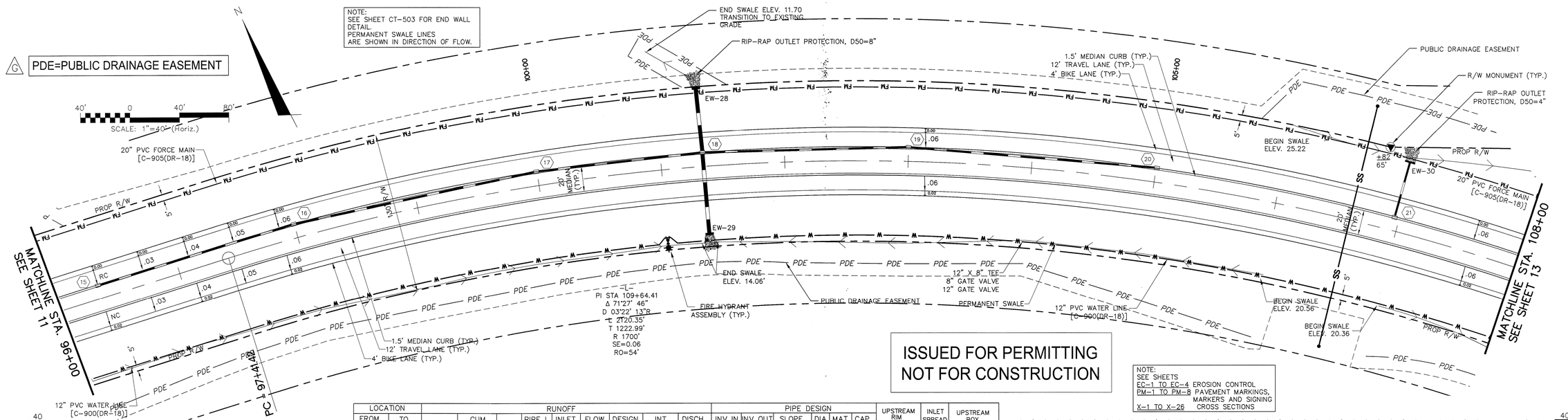

ISSUED FOR PERMITTING
NOT FOR CONSTRUCTION

NOTE:
SEE SHEETS
EC-1 TO EC-4 EROSION CONTROL
PM-1 TO PM-8 PAVEMENT MARKINGS, MARKERS AND SIGNING
X-1 TO X-26 CROSS SECTIONS

LOCATION		RUNOFF									PIPE DESIGN						UPSTREAM RIM	INLET SPREAD	UPSTREAM BOX
FROM	TO		CUM.		PIPE L	INLET	FLOW	DESIGN	INT	DISCH.	INV IN	INV OUT	SLOPE	DIA.	MAT.	CAP.			
		D.A.(AC.)	D.A.(AC.)	CA	(FT)	TIME	TIME	TIME	I(IN/HR)	Q (CFS)	(FT.)	(FT.)	(FT/FT)	(IN)		(CFS)	ELEV.	(FT)	NCDOT STD.
15	16	0.06	0.06	0.049	162	5.00	5.00	10.00	7.13	0.349	20.25	19.29	0.00593	18	C	13	23.50	2.20	840.01
16	17	0.12	0.18	0.150	197	5.00	5.37	10.37	7.06	1.061	19.29	17.67	0.00823	18	C	13	22.54	1.96	840.01
17	18	0.14	0.32	0.273	132	5.00	5.81	10.81	6.97	1.901	17.67	16.80	0.00657	18	C	13	20.92	2.17	840.01
20	19	0.14	0.14	0.119	198	5.00	5.00	10.00	7.13	0.848	21.16	18.21	0.01492	18	C	13	24.41	1.80	840.01
19	18	0.20	0.34	0.289	163	5.00	5.45	10.45	7.04	2.036	18.21	16.80	0.00866	18	C	13	21.46	1.86	840.01
EW-29	18	6.90	6.90	5.865	66	5.00	5.00	10.00	7.13	41.817	13.75	13.06	0.01045	30	C	43	21.20	2.62	N/A
18	EW-28	0.20	7.76	6.600	52	5.00	5.00	10.00	7.13	47.056	13.06	12.00	0.02038	42	C	90	21.20	2.62	840.01
21	EW-30	0.15	0.15	0.131	45	5.00	5.00	10.00	7.13	0.931	23.50	23.21	0.00640	18	C	13	27.31	1.96	840.01

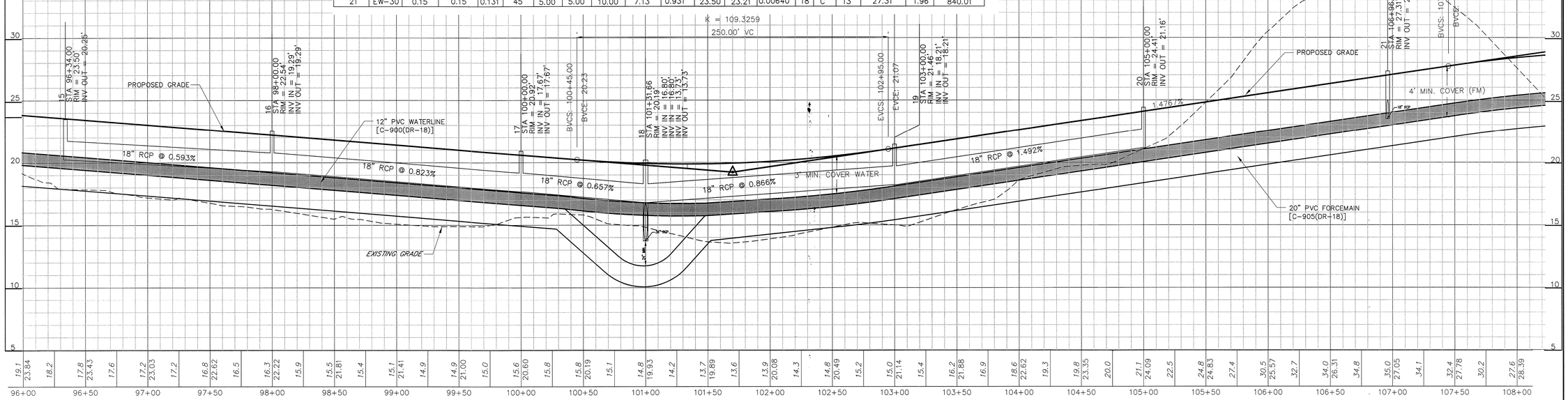

REV.NO.	DESCRIPTIONS	DATE
	REVISIONS	
G	REVISED PER DISTRICT NCDOT COMMENTS	10/14/08
	BULLETIN DRAWING	10/08/08
F	REVISED WATERLINE AND CROSS SECTIONS	09/03/08
E	REVISED PER NCDOT HYDRAULICS COMMENTS 07/15/08	07/28/08
D	REVISION 2 PLANS	07/09/08
	REVISED PER NCDOT ENCROACHMENT	6/13/08
	REVISED PER NHC SEWER COMMENTS	3/28/08
C	REVISED PER NCDOT COMMENTS	12/20/07
B	UPDATED UTILITIES PER NEW HANOVER COUNTY AND CITY OF WILMINGTON	11/24/07
A	FINAL DESIGN PLAN – SUBMITTAL TO NCDOT	6/27/07

SEAL

SEAL
NORTH CAROLINA PROFESSIONAL SEAL 22574 ENGINEER RICHARD M. CADLER
10/14/08

McKIM & CREED
243 North Front Street
Wilmington, North Carolina 28401
Phone: (910)343-1048 , Fax: (910)251-8282
AA0002667 EB0006691
www.mckimcreed.com

Newland COMMUNITIES
AT THE HEART OF GREAT LIVING

RIVER ROAD

ROADWAY PLAN & PROFILE
PROPOSED RIVER ROAD
STA 96+00 – STA 108+00

DATE:	JUNE 2007
MCE PROJ. #	02735-0007
DRAWN	BCE
DESIGNED	BCE
CHECKED	RMC
PROJ. MGR.	RMC

SCALE
HORIZONTAL: 1"=40'
VERTICAL: NA

MAC FILE NUMBER CU-708
DRAWING NUMBER 12

STATUS: FINAL DESIGN PLANS
REVISION G

S:\02735\0007\80-Drawings\CU708-027350007.dwg, CU-706, 10/14/2008 12:17:43 PM, bshington

NOTE:
SEE SHEETS
EC-1 TO EC-4 EROSION CONTROL
PM-1 TO PM-8 PAVEMENT MARKINGS, MARKERS AND SIGNING
X-1 TO X-26 CROSS SECTIONS

NOTE:
SEE SHEET CT-503 FOR END WALL DETAIL.
PERMANENT SWALE LINES ARE SHOWN IN DIRECTION OF FLOW.

PDE=PUBLIC DRAINAGE EASEMENT

ISSUED FOR PERMITTING
NOT FOR CONSTRUCTION

LOCATION		RUNOFF									PIPE DESIGN						UPSTREAM RIM	INLET SPREAD	UPSTREAM BOX
FROM	TO	D.A.(AC.)	CUM. D.A.(AC.)	CA	PIPE L (FT)	INLET TIME	FLOW TIME	DESIGN TIME	INT I(IN/HR)	DISCH. Q (CFS)	INV IN (FT.)	INV OUT (FT.)	SLOPE (FT/FT)	DIA. (IN)	MAT.	CAP. (CFS)	ELEV.	(FT)	NCDOT STD.
EW-33	22	2.19	2.19	1.862	45	5.00	5.00	10.00	7.13	13.272	21.41	21.18	0.00508	24	C	25	29.26	0.55	N/A
22	EW-34	0.15	2.34	1.992	131	5.00	5.09	10.09	7.11	14.169	21.18	11.00	0.07771	24	C	25	29.26	0.55	840.01
28	27	0.03	0.03	0.026	121	5.00	5.00	10.00	7.13	0.187	23.47	20.43	0.02511	18	C	13	27.72	2.30	840.17
27	26	0.09	0.12	0.104	177	5.00	5.27	10.27	7.08	0.733	20.43	18.16	0.01284	18	C	13	24.68	1.99	840.17
EW-35	26	5.18	5.18	4.403	60	5.00	5.00	10.00	7.13	31.393	17.50	17.20	0.00503	30	C	43	22.41	1.11	N/A
25	26	0.17	0.17	0.140	83	5.00	5.00	10.00	7.13	1.002	18.84	18.16	0.00819	18	C	13	22.41	0.64	N/A
26	26A	0.03	5.50	4.676	82	5.00	5.67	10.67	7.00	32.739	17.20	12.33	0.05939	30	C	43	22.41	1.11	840.01
26A	24	2.51	8.01	6.810	325	5.00	5.83	10.83	6.97	47.472	12.33	11.35	0.00301	36	C	64	16.00	8.35	840.19
23	24	0.40	0.40	0.338	69	5.00	5.00	10.00	7.13	2.409	20.19	14.00	0.08997	18	C	13	24.44	3.32	840.01
24	EW-34A	0.46	8.87	7.538	357	5.00	6.43	11.43	6.85	51.652	11.35	10.30	0.00294	36	C	64	19.08	3.58	840.19

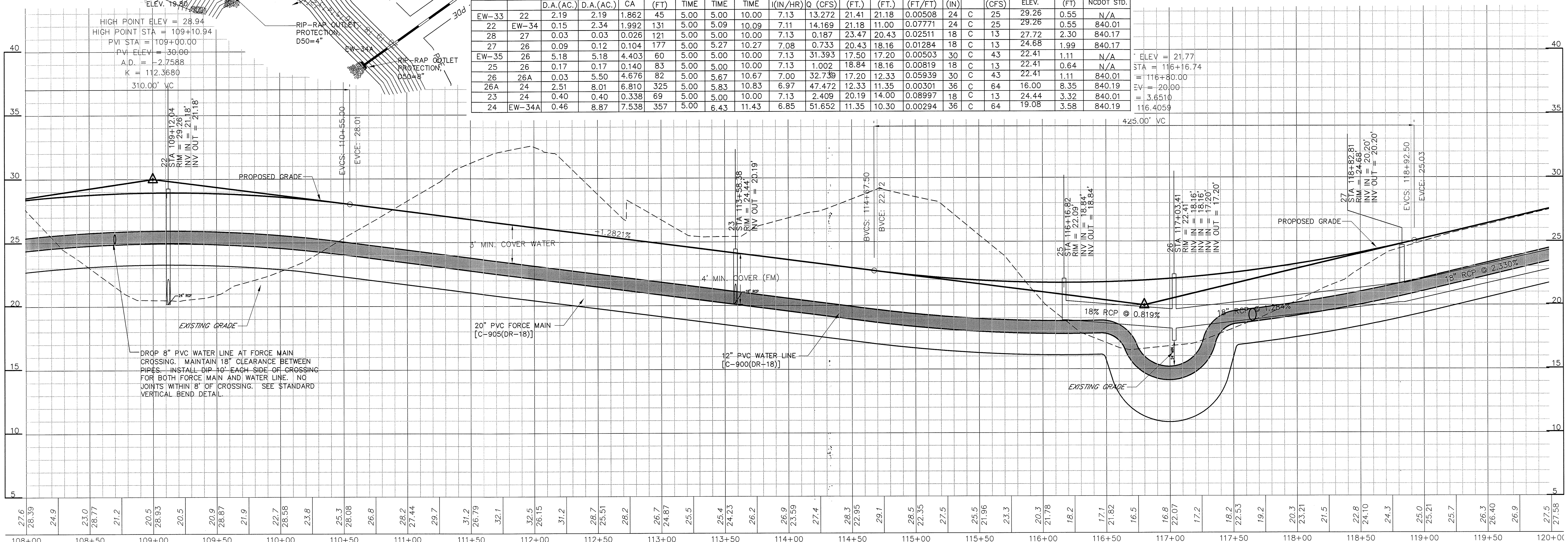

REV.NO.	DESCRIPTIONS	DATE
G	REVISED PER DISTRICT NCDOT COMMENTS	10/14/08
	BULLETIN DRAWING	10/08/08
F	REVISED WATERLINE AND CROSS SECTIONS	09/03/08
E	REVISED PER NCDOT HYDRAULICS COMMENTS 07/15/08	07/28/08
D	REVISION 2 PLANS	07/09/08
	REVISED PER NCDOT ENCROACHMENT COMMENTS	6/13/08
	REVISE PER NHC SEWER COMMENTS	3/28/08
C	REVISED PER NCDOT COMMENTS	12/20/07
B	UPDATED UTILITIES PER NEW HANOVER COUNTY AND CITY OF WILMINGTON	11/24/07
A	FINAL DESIGN PLAN - SUBMITTAL TO NCDOT	6/27/07

REVISIONS

SEAL

SEAL
NORTH CAROLINA PROFESSIONAL ENGINEER SEAL 22574 RICHARD M. COLLIER
10/14/08

McKIM&CREED
243 North Front Street
Wilmington, North Carolina 28401
Phone: (910)343-1048 , Fax: (910)251-8282
AA0002667 EB0006691
www.mckimcreed.com

Newland® COMMUNITIES
AT THE HEART OF GREAT LIVING

RIVER ROAD

ROADWAY PLAN & PROFILE
PROPOSED RIVER ROAD
STA 108+00 - STA 120+00

DATE:	JUNE 2007
MCE PROJ. #	02735-0007
DRAWN	BCE
DESIGNED	BCE
CHECKED	RMC
PROJ. MGR.	RMC

SCALE
HORIZONTAL: 1"=40'
VERTICAL: 1"=4'

M&C FILE NUMBER CU-709
DRAWING NUMBER 13

STATUS: FINAL DESIGN PLANS
REVISION G

S:\2735\0007\80-Drawings\CU709-027350007.dwg, CU-703, 10/14/2008 12:22:44 PM, belvington

G PDE=PUBLIC DRAINAGE EASEMENT

NOTE:
SEE SHEET CT-503 FOR END WALL DETAIL.
PERMANENT SWALE LINES ARE SHOWN IN DIRECTION OF FLOW.

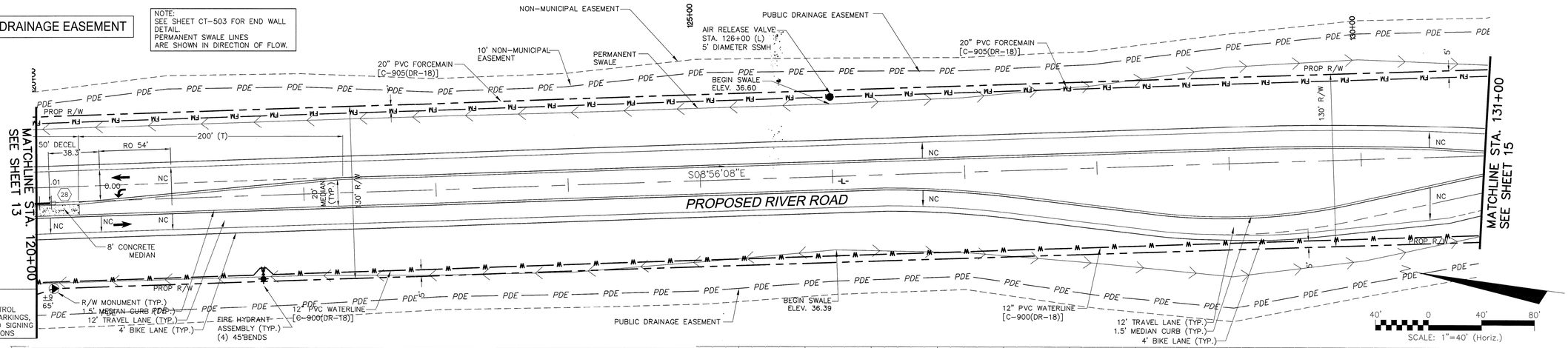

NOTE:
SEE SHEETS
EC-1 TO EC-4 EROSION CONTROL
PM-1 TO PM-8 PAVEMENT MARKINGS, MARKERS AND SIGNING
X-1 TO X-26 CROSS SECTIONS

LOCATION		RUNOFF									PIPE DESIGN						UPSTREAM	INLET	UPSTREAM
FROM	TO		CUM.		PIPE L	INLET	FLOW	DESIGN	INT	DISCH.	INV IN	INV OUT	SLOPE	DIA.	MAT.	CAP.	RIM	SPREAD	NCDOT
		D.A.(AC.)	D.A.(AC.)	CA	(FT)	TIME	TIME	TIME	I(IN/HR)	Q (CFS)	(FT.)	(FT.)	(FT/FT)	(IN)		(CFS)	ELEV.	(FT)	STD. NO.
28	27	0.03	0.03	0.026	121	5.00	5.00	10.00	7.13	0.187	23.47	20.43	0.02511	18	C	13	27.72	2.30	840.17

HIGH POINT ELEV = 39.97
HIGH POINT STA = 126+59.89
PVI STA = 125+66.46
PVI ELEV = 41.00
A.D. = -3.1190
K = 115.4228
360.00' VC

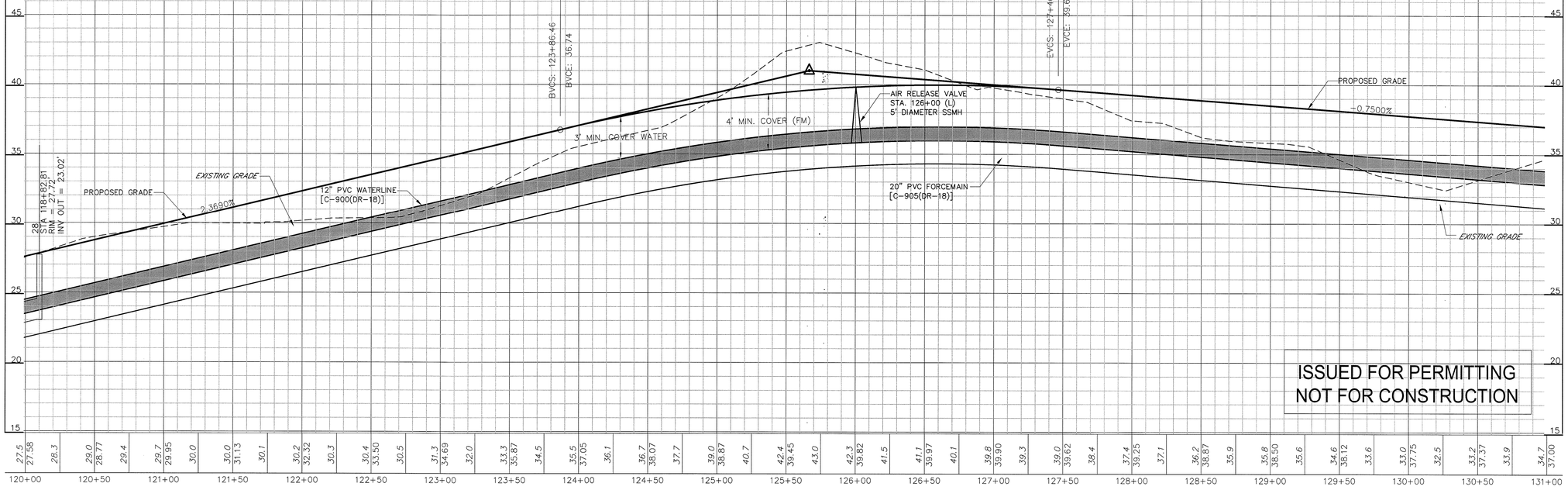

ISSUED FOR PERMITTING
NOT FOR CONSTRUCTION

PROPOSED RIVER ROAD

REV.NO.	DESCRIPTIONS	DATE
G	REVISED PER DISTRICT NCDOT COMMENTS	10/14/08
	BULLETIN DRAWING	10/08/08
F	REVISED WATERLINE AND CROSS SECTIONS	09/03/08
E	REVISED PER NCDOT HYDRAULICS COMMENTS 07/15/08	07/28/08
D	REVISION 2 PLANS	07/09/08
	REVISED PER NCDOT ENCROACHMENT COMMENTS	6/13/08
	REVISED PER NHC SEWER COMMENTS	3/28/08
C	REVISED PER NCDOT COMMENTS	12/20/07
B	UPDATED UTILITIES PER NEW HANOVER COUNTY AND CITY OF WILMINGTON	11/24/07
A	FINAL DESIGN PLANS - SUBMITTAL TO NCDOT	6/27/07

REVISIONS

SEAL

SEAL
NORTH CAROLINA PROFESSIONAL SEAL 22574 ENGINEER RICHARD C. BOLLINGER

McKIM & CREED
243 North Front Street
Wilmington, North Carolina 28401
Phone: (910)343-1048 , Fax: (910)251-8282
AA0002667 EB0006691
www.mckimcreed.com

Newland COMMUNITIES
AT THE HEART OF GREAT LIVING

RIVER ROAD

ROADWAY PLAN & PROFILE
PROPOSED RIVER ROAD
STA 120+00 - STA 131+00

DATE:	JUNE 2007
MCE PROJ. #	02735-0007
DRAWN	BCE
DESIGNED	BCE
CHECKED	RMC
PROJ. MGR.	RMC

SCALE
HORIZONTAL: 1"=40'
VERTICAL: 1"=4'

M&C FILE NUMBER: CU-710
DRAWING NUMBER: 14

STATUS: FINAL DESIGN PLANS
REVISION: G

S:\2735\000780-Drawings\CU710-027350007.dwg, CU-710, 10/14/2008 12:28:29 PM, bshrington

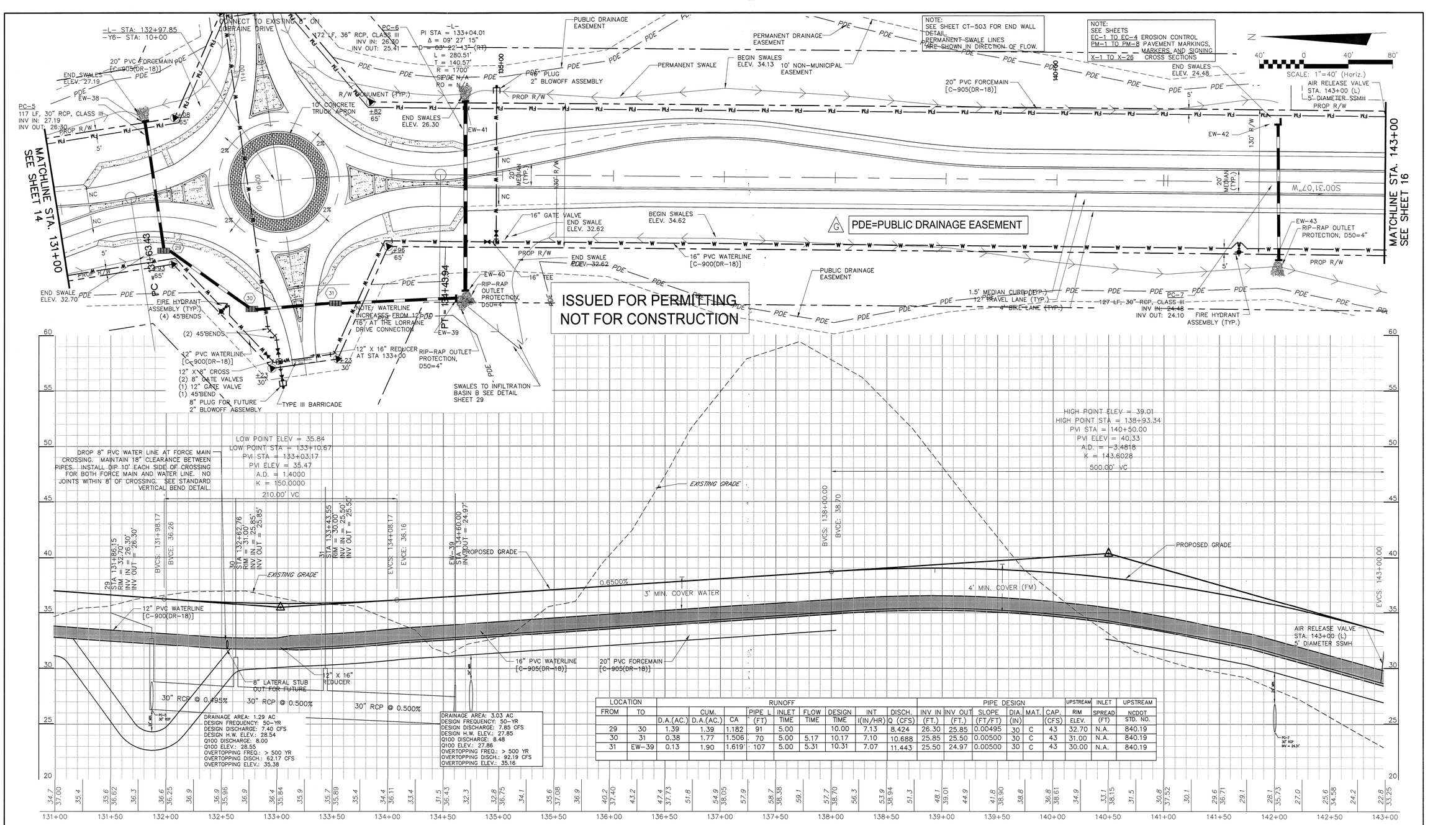

LOCATION		RUNOFF									PIPE DESIGN						UPSTREAM	INLET	UPSTREAM
FROM	TO		CUM.		PIPE L	INLET	FLOW	DESIGN	INT	DISCH.	INV IN	INV OUT	SLOPE	DIA.	MAT.	CAP.	RIM	SPREAD	NCDOT
		D.A.(AC.)	D.A.(AC.)	CA	(FT)	TIME	TIME	TIME	I(IN/HR)	Q (CFS)	(FT.)	(FT.)	(FT/FT)	(IN)		(CFS)	ELEV.	(FT)	STD. NO.
29	30	1.39	1.39	1.182	91	5.00		10.00	7.13	8.424	26.30	25.85	0.00495	30	C	43	32.70	N.A.	840.19
30	31	0.38	1.77	1.506	70	5.00	5.17	10.17	7.10	10.688	25.85	25.50	0.00500	30	C	43	31.00	N.A.	840.19
31	EW-39	0.13	1.90	1.619	107	5.00	5.31	10.31	7.07	11.443	25.50	24.97	0.00500	30	C	43	30.00	N.A.	840.19

PROPOSED RIVER ROAD

REV.NO.	DESCRIPTIONS	DATE
G	REVISED PER DISTRICT NCDOT COMMENTS	10/14/08
	BULLETIN DRAWING	10/08/08
F	REVISED WATERLINE AND CROSS SECTIONS	09/03/08
E	REVISED PER NCDOT HYDRAULICS COMMENTS 07/15/08	07/28/08
D	REVISON 2 PLANS	07/09/08
	FINAL DESIGN PLANS - SUBMITTAL TO NCDOT HYDRAULICS	05/23/08
	REVISED PER JIM BONSERS COMMENTS	4-25-08
	REVISED PER NHC SEWER COMMENTS	3/28/08
C	REVISED PER NCDOT COMMENTS	12/20/07
B	UPDATED UTILITIES PER NEW HANOVER COUNTY AND CITY OF WILMINGTON	11/24/07
A	FINAL DESIGN PLANS - SUBMITTAL TO NCDOT	6/22/07

REVISIONS

SEAL

SEAL
NORTH CAROLINA PROFESSIONAL SEAL 22574 ENGINEER RICHARD M. COLLIER

McKIM & CREED
243 North Front Street
Wilmington, North Carolina 28401
Phone: (910)343-1048 , Fax: (910)251-8282
AA0002667 EB0006691
www.mckimcreed.com

Newland COMMUNITIES
AT THE HEART OF GREAT LIVING

RIVER ROAD

ROADWAY PLAN & PROFILE PROPOSED RIVER ROAD STA 131+00 – STA 143+00

DATE:	JUNE 2007
MCE PROJ. #	02735-0007
DRAWN	BCE
DESIGNED	BCE
CHECKED	RMC
PROJ. MGR.	RMC

SCALE
HORIZONTAL: 1"=40'
VERTICAL: 1"=4'

M&C FILE NUMBER CU-711
DRAWING NUMBER 15

STATUS: FINAL DESIGN PLANS
REVISION G

Xrivington

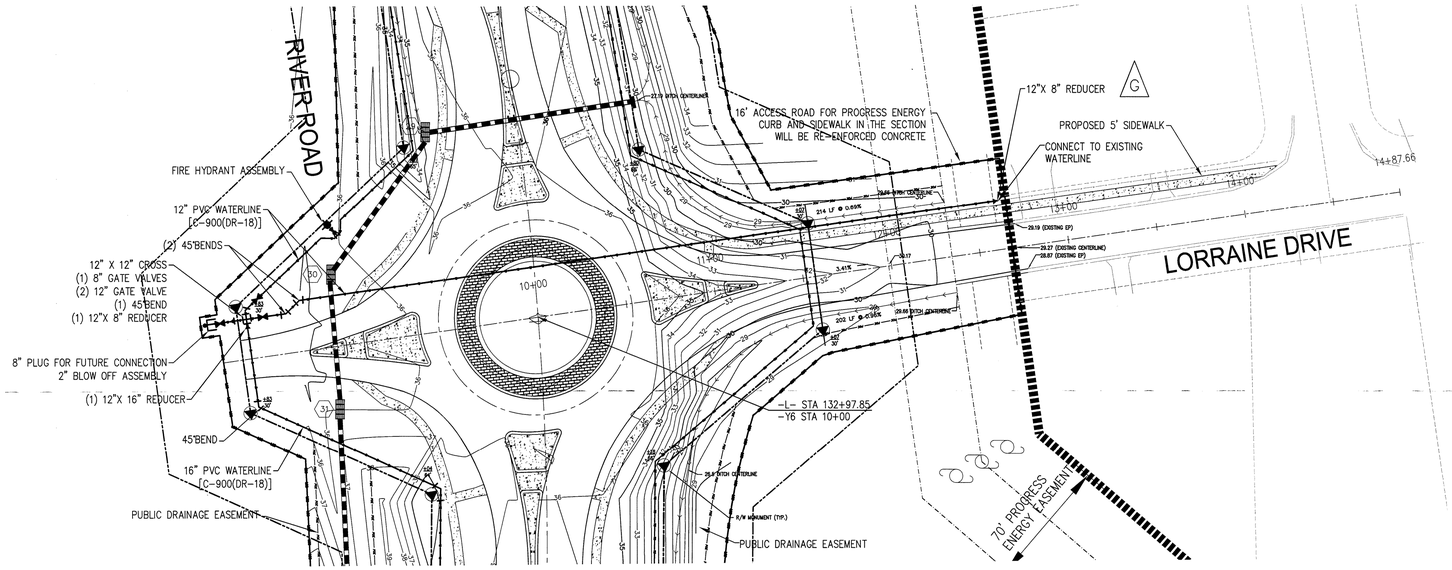

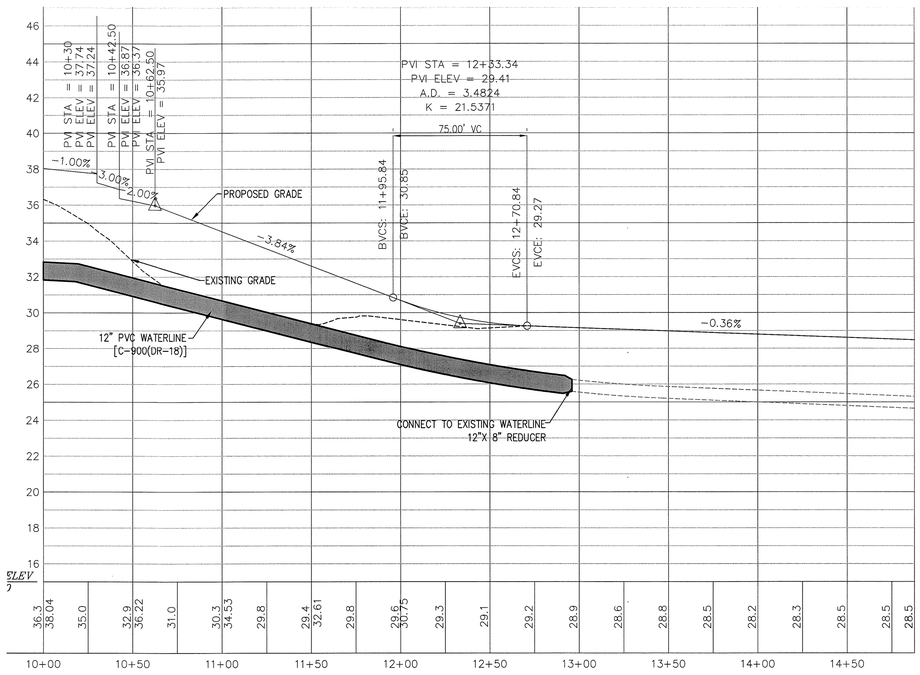

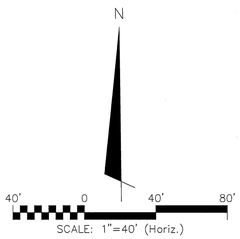

G PDA=PUBLIC DRAINAGE EASEMENT

ISSUED FOR PERMITTING
NOT FOR CONSTRUCTION

REV.NO.	DESCRIPTIONS	DATE
G	REVISED PER DISTRICT NCDOT COMMENTS	10/14/08
F	REVISED WATERLINE AND CROSS SECTIONS	09/03/08
E	REVISED PER NCDOT HYDRAULICS COMMENTS 07/15/08	07/28/08
D	REVISION 2 PLANS	07/09/08

REVISIONS

SEAL

SEAL
NORTH CAROLINA PROFESSIONAL SEAL 22574 ENGINEER RICHARD M. COLLIER

McKIM & CREED
243 North Front Street
Wilmington, North Carolina 28401
Phone: (910)343-1048 , Fax: (910)251-8282
AA0002667 EB0006691
www.mckimcreed.com

Newland COMMUNITIES
AT THE HEART OF GREAT LIVING

LORRAINE DRIVE CONNECTION

PLAN AND PROFILE

DATE:	JUNE 2008
MCE PROJ. #	2735-0007
DRAWN	BCE
DESIGNED	BCE
CHECKED	RMC
PROJ. MGR.	RMC

SCALE
HORIZONTAL: 1"=40'
VERTICAL:

M&C FILE NUMBER CU-711A
DRAWING NUMBER 15A

STATUS: FINAL DESIGN PLANS
REVISION G

S:\2735000\7800-Drawings\CU711A\02735000?.dwg, CS-101, 10/20/2008 3:45:31 PM, bellrington

NOTE:
SEE SHEET CT-503 FOR END WALL DETAIL.
PERMANENT SWALE LINES ARE SHOWN IN DIRECTION OF FLOW.

MATCHLINE STA. 143+00
SEE SHEET 15

MATCHLINE STA. 155+00
SEE SHEET 17

BEGIN SWALE ELEV. 25.64

1.5' MEDIAN CURB (TYP.)
12' TRAVEL LANE (TYP.)
4' BIKE LANE (TYP.)

PROP R/W

130' R/W

20' MEDIAN (TYP.)

PUBLIC DRAINAGE EASEMENT
10' NONMUNICIPAL EASEMENT
PERMANENT SWALE

AIR RELEASE VALVE
STA. 143+00 (L)
5' DIAMETER SSMH

8" PLUG
2" BLOW OFF

TYPE III BARRICADE

-L- STA: 148+24
-Y7B- STA: 10+00

END PAVEMENT

DP-10
62 LF, 24" RCP, CLASS III
INV IN: 16.18
INV OUT: 14.31

RIP-RAP OUTLET PROTECTION, D50=4"

PC 150+25.44

RIP-RAP OUTLET PROTECTION, D50=8"

END SWALE ELEV. 9.65

PUBLIC DRAINAGE EASEMENT

20" PVC FORCEMAIN [C-905(DR-18)]

BEGIN SWALE ELEV. 14.03

2' PAVED SHOULDER

1.5' MEDIAN CURB (TYP.)
12' TRAVEL LANE (TYP.)
4' BIKE LANE (TYP.)

PUBLIC DRAINAGE EASEMENT

200' (T)
50' DECEL
100' FULL STORAGE
200' TAPER

EW-44
EW-45
EW-46
EW-47
EW-48
EW-49
EW-50

8' CONCRETE MEDIAN

RIP-RAP OUTLET PROTECTION, D50=4"

FIRE HYDRANT ASSEMBLY (TYP.)
18" OFF RIGHT OF WAY
(4) 45°BENDS

-L- STA: 148+74
-Y7A- STA: 10+00

END SWALES ELEV. 8.87

TAIL DITCH TO WETLANDS
SEE SHEET 29

-L-
PI STA = 159+01.86
Δ = 54° 37' 32"
D = 03° 22' 13" (IT)
L = 1620.77'
T = 877.91'
R = 1700'
SE = 0.06
RO = 54'

PDE=PUBLIC DRAINAGE EASEMENT

NOTE:
SEE SHEETS
EC-1 TO EC-4 EROSION CONTROL
PM-1 TO PM-8 PAVEMENT MARKINGS, MARKERS AND SIGNING
X-1 TO X- CROSS SECTIONS

ISSUED FOR PERMITTING
NOT FOR CONSTRUCTION

16" X 8" CROSS
(2) 8" GATE VALVES
(1) 16" GATE VALVE

8" PLUG
2" BLOW OFF

DP-9
62 LF, 24" RCP, CLASS III
INV IN: 14.56
INV OUT: 14.37

R/W MONUMENT (TYP.)

50'X200' SIGHT TRIANGLE

SCALE: 1"=40' (Horiz.)

LOW POINT STA = 150+83.73
PVI STA = 149+79.94
PVI ELEV = 13.99
A.D. = 4.0021
K = 124.9329
500.00' VC

AIR RELEASE VALVE
STA. 143+00 (L)
5' DIAMETER SSMH

PROPOSED GRADE

-2.831%

EXISTING GRADE

BVCS: 147+29.94
BVCE: 21.07

DROP 8" PVC WATER LINE AT FORCE MAIN CROSSING. MAINTAIN 18" CLEARANCE BETWEEN PIPES. INSTALL DIP 10' EACH SIDE OF CROSSING FOR BOTH FORCE MAIN AND WATER LINE. NO JOINTS WITHIN 8' OF CROSSING. SEE STANDARD VERTICAL BEND DETAIL.

32
STA 150+82.98
RIM = 16.38
INV OUT = 13.13

33
STA 152+18.68
RIM = 17.11
INV IN = 9.27

EVCS: 152+29.94
EVCE: 16.92

EXISTING GRADE

PROPOSED GRADE

3' MIN. COVER WATER

4" MIN. COVER (FM)

20" PVC FORCEMAIN
[C-905(DR-18)]

LOCATION		RUNOFF									PIPE DESIGN						UPSTREAM	INLET	UPSTREAM
FROM	TO	D.A.(AC.)	CUM. D.A.(AC.)	CA	PIPE L (FT)	INLET TIME	FLOW TIME	DESIGN TIME	INT. I(IN/HR)	DISCH. Q (CFS)	INV IN (FT.)	INV OUT (FT.)	SLOPE (FT/FT)	DIA. (IN)	MAT.	CAP. (CFS)	RIM ELEV.	SPREAD (FT)	NCDOT STD. NO.
32	EW-48	0.22	0.22	0.187	73	5.00	5.00	10.00	7.13	1.333	12.02	10.36	0.02274	18	C	13	16.38	1.33	840.01
EW-49	33	11.86	11.86	10.081	76	5.00	5.00	10.00	7.13	71.878	9.65	9.27	0.00500	36	C	64	17.11	2.24	
33	EW-50	0.09	11.95	10.158	74	5.00	5.14	10.14	7.10	72.155	9.27	8.87	0.00536	36	C	64	17.11	2.24	840.01
34	EW-51	0.17	0.17	0.142	58	5.00	5.00	10.00	7.13	1.009	17.15	14.86	0.03957	18	C	13	20.40	2.15	840.01

REV.NO.	DESCRIPTIONS	DATE
G	REVISED PER DISTRICT NCDOT COMMENTS	10/14/08
	BULLETIN DRAWING	10/08/08
F	REVISED WATERLINE AND CROSS SECTIONS	09/03/08
E	REVISED PER NCDOT HYDRAULIC COMMENTS 7-15-08	7/28/08
D	REVISION 2 PLANS	07/09/08
	REVISED PER JIM BONSER'S COMMENTS	4-25-08
	REVISED PER NHC SEWER COMMENTS	
C	REVISED PER NCDOT COMMENTS	12/22/07
B	UPDATED UTILITIES PER NEW HANOVER COUNTY AND CITY OF WILMINGTON	11/24/07
A	FINAL DESIGN PLANS - SUBMITTAL TO NCDOT	6/27/07

REVISIONS

SEAL

SEAL
NORTH CAROLINA PROFESSIONAL SEAL 22574 ENGINEER RICHARD M. COLLIER

McKIM & CREED
243 North Front Street
Wilmington, North Carolina 28401
Phone: (910)343-1048 , Fax: (910)251-8282
AA0002667 EB0006691
www.mckimcreed.com

Newland COMMUNITIES
AT THE HEART OF GREAT LIVING

RIVER ROAD

ROADWAY PLAN & PROFILE
PROPOSED RIVER ROAD
STA 143+00 - STA 155+00

DATE:	JUNE 2007
MCE PROJ. #	02735-0007
DRAWN	BCE
DESIGNED	BCE
CHECKED	RMC
PROJ. MGR.	RMC

SCALE
HORIZONTAL: 1"=40'
VERTICAL: 1"=4'

MSC FILE NUMBER
CU-712
DRAWING NUMBER
16

STATUS: FINAL DESIGN PLANS
REVISION G

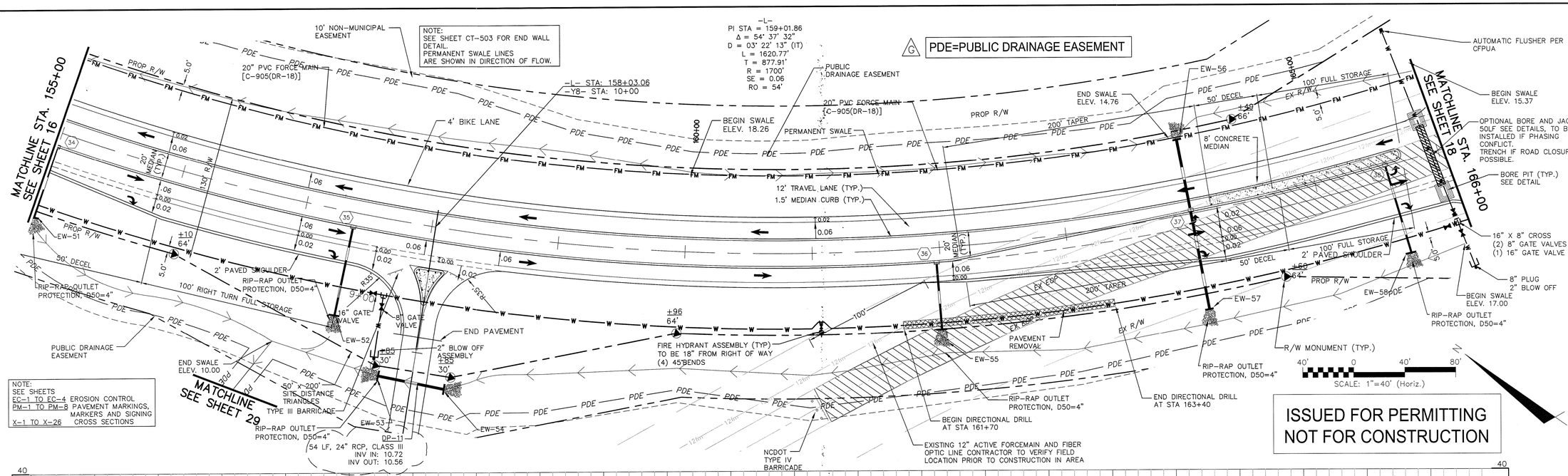

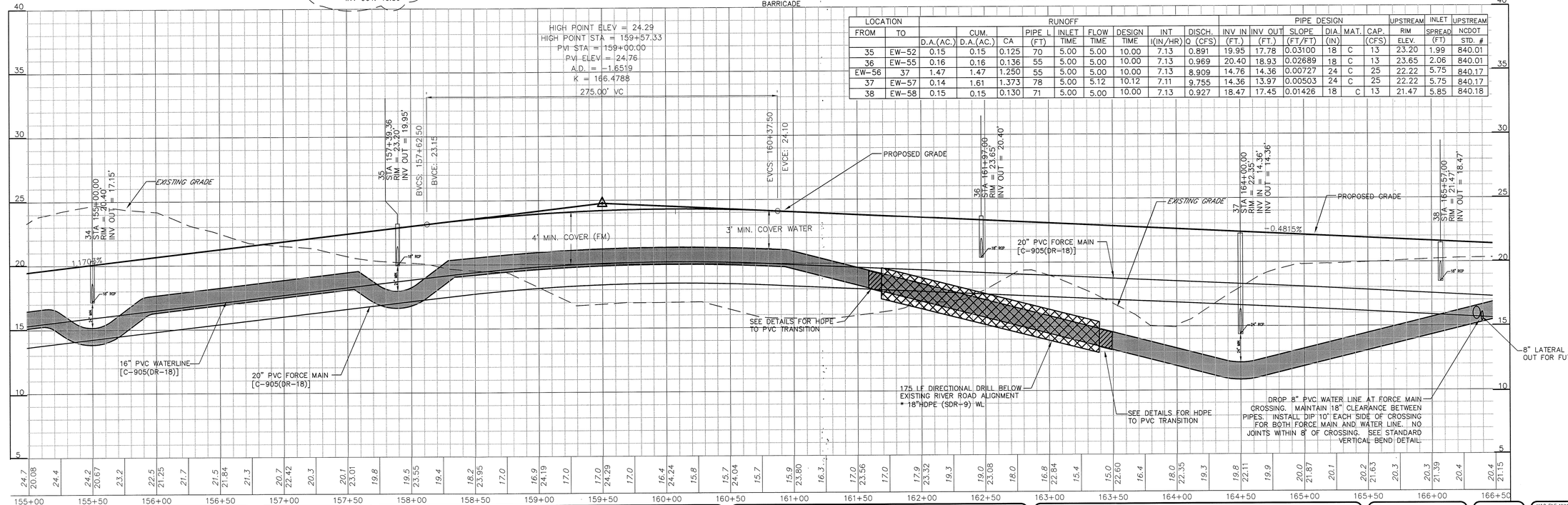

LOCATION		RUNOFF									PIPE DESIGN						UPSTREAM	INLET	UPSTREAM
FROM	TO	D.A.(AC.)	CUM. D.A.(AC.)	CA	PIPE L (FT)	INLET TIME	FLOW TIME	DESIGN TIME	INT I(IN/HR)	DISCH. Q (CFS)	INV IN (FT.)	INV OUT (FT.)	SLOPE (FT/FT)	DIA. (IN)	MAT.	CAP. (CFS)	RIM ELEV.	SPREAD (FT)	NCDOT STD. #
35	EW-52	0.15	0.15	0.125	70	5.00	5.00	10.00	7.13	0.891	19.95	17.78	0.03100	18	C	13	23.20	1.99	840.01
36	EW-55	0.16	0.16	0.136	55	5.00	5.00	10.00	7.13	0.969	20.40	18.93	0.02689	18	C	13	23.65	2.06	840.01
EW-56	37	1.47	1.47	1.250	55	5.00	5.00	10.00	7.13	8.909	14.76	14.36	0.00727	24	C	25	22.22	5.75	840.17
37	EW-57	0.14	1.61	1.373	78	5.00	5.12	10.12	7.11	9.755	14.36	13.97	0.00503	24	C	25	22.22	5.75	840.17
38	EW-58	0.15	0.15	0.130	71	5.00	5.00	10.00	7.13	0.927	18.47	17.45	0.01426	18	C	13	21.47	5.85	840.18

REV.NO.	DESCRIPTIONS	DATE
	REVISIONS	
G	REVISED PER DISTRICT NCDOT COMMENTS	10/14/08
	BULLETIN DRAWING	09/25/08
F	REVISED WATERLINE AND CROSS SECTIONS	09/03/08
E	REVISED PER NCDOT HYDRAULIC COMMENTS 7-15-08	7/28/08
D	REVISION 2 PLANS	07/09/08
	REVISED PER JIM BONSER'S COMMENTS	4-25-08
	REVISED PER NHC SEWER COMMENTS	3/28/08
C	REVISED PER COMMENTS FROM NCDOT	12/20/07
B	UPDATED UTILITIES PER NEW HANOVER COUNTY AND CITY OF WILMINGTON	11/24/07
A	SUBMIT FINAL DESIGN PLANS TO NCDOT	06/27/07

SEAL

SEAL
NORTH CAROLINA PROFESSIONAL SEAL 22574 ENGINEER R. CHRISTOPHER MILLER

McKIM&CREED
243 North Front Street
Wilmington, North Carolina 28401
Phone: (910)343-1048 , Fax: (910)251-8282
AA0002667 EB0006691
www.mckimcreed.com

Newland® COMMUNITIES
AT THE HEART OF GREAT LIVING

RIVER ROAD

ROADWAY PLAN & PROFILE PROPOSED RIVER ROAD STA 155+00 – STA 166+00

DATE:	JUNE 2007
MCE PROJ. #	02735-0007
DRAWN	BCE
DESIGNED	BCE
CHECKED	RMC
PROJ. MGR.	RMC

SCALE
HORIZONTAL: 1"=40'
VERTICAL: 1"=4

M&C FILE NUMBER CU-713
DRAWING NUMBER 17

STATUS: FINAL DESIGN PLANS REVISION G

S:\27350\00740-Drawings\CU713-027350007.dwg, CU-713, 10/14/2008 4:03:11 PM, bellmington

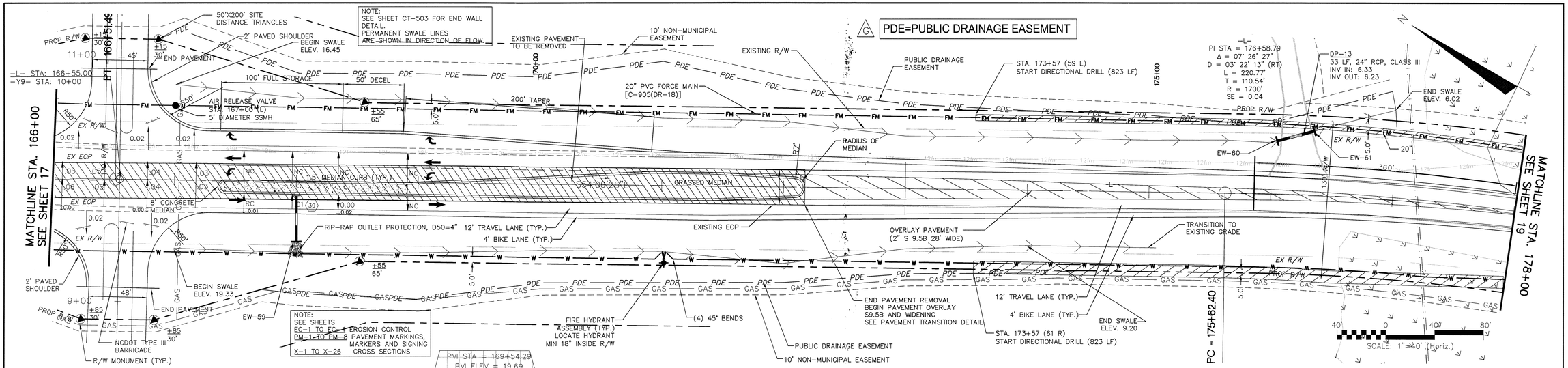

PVI STA = 169+54.29
PVI ELEV = 19.69
A.D. = -1.1043
K = 226.3895
250.00' VC

LOCATION		RUNOFF									PIPE DESIGN						UPSTREAM	INLET	UPSTREAM
FROM	TO	D.A.(AC.)	CUM. D.A.(AC.)	CA	PIPE L (FT)	INLET TIME	FLOW TIME	DESIGN TIME	INT I(IN/HR)	DISCH. Q (CFS)	INV IN (FT.)	INV OUT (FT.)	SLOPE (FT/FT)	DIA. (IN)	MAT.	CAP. (CFS)	RIM ELEV.	SPREAD (FT)	NCDOT STD. #
39	EW-59	0.07	0.07	0.062	38	5.00	5.00	10.00	7.13	0.442	17.32	17.13	0.00501	18	C	13	20.32	5.14	840.18

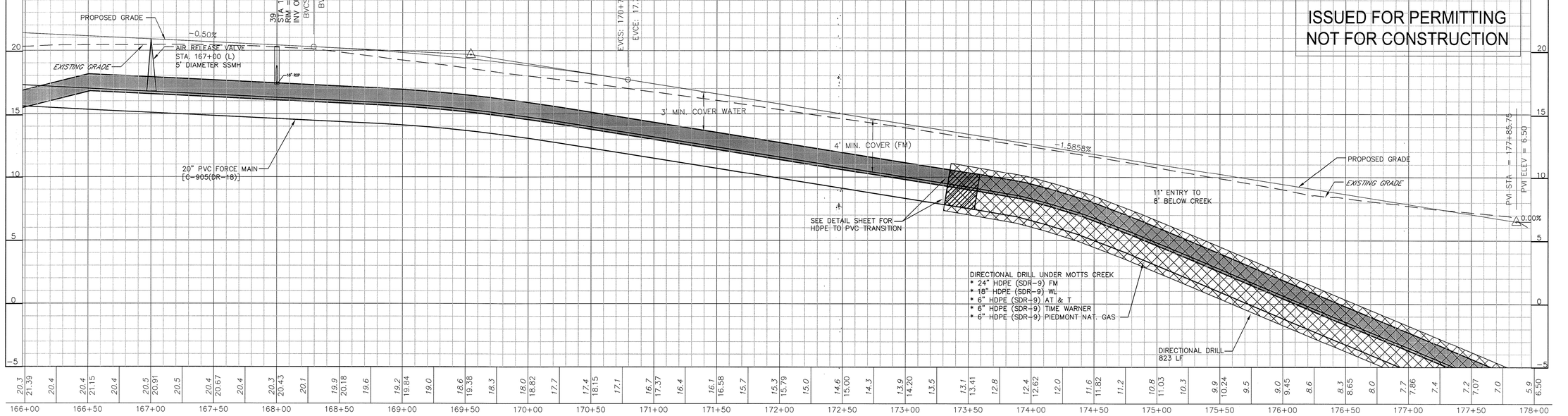

ISSUED FOR PERMITTING
NOT FOR CONSTRUCTION

PROPOSED RIVER ROAD

REV.NO.	DESCRIPTIONS	DATE
G	REVISED PER DISTRICT NCDOT COMMENTS	10/14/08
F	REVISED WATERLINE AND CROSS SECTIONS	09/03/08
E	REVISED PER NCDOT HYDRAULICS COMMENTS 7-15-08	7/28/08
D	REVISON 2 PLANS	07/09/08
	FINAL DESIGN PLANS TO NCDOT HYDRAULICS	05/23/08
	REVISED PER JIM BONSER'S COMMENTS	4-25-08
	REVISED PER NHC SEWER COMMENTS	3/28/08
C	REVISED PER NCDOT COMMENTS	12/20/07
B	UPDATED UTILITIES PER NEW HANOVER COUNTY AND CITY OF WILMINGTON	11/24/07
A	SUBMIT FINAL DESIGN PLANS TO NCDOT	06/27/07

REVISIONS

SEAL

SEAL
NORTH CAROLINA PROFESSIONAL SEAL 22574 ENGINEER RICHARD M. COLLIER
10/14/08

McKIM & CREED
243 North Front Street
Wilmington, North Carolina 28401
Phone: (910)343-1048 , Fax: (910)251-8282
AA0002667 EB0006691
www.mckimcreed.com

Newland COMMUNITIES
AT THE HEART OF GREAT LIVING

RIVER ROAD

ROADWAY PLAN & PROFILE
PROPOSED RIVER ROAD
STA 166+00 – STA 178+00

DATE:	JUNE 2007
MCE PROJ. #	02735-0007
DRAWN	BCE
DESIGNED	BCE
CHECKED	RMC
PROJ. MGR.	RMC

SCALE
HORIZONTAL: 1"=40'
VERTICAL: 1"=4

M&C FILE NUMBER CU-714
DRAWING NUMBER 18

STATUS: FINAL DESIGN PLANS
REVISION G

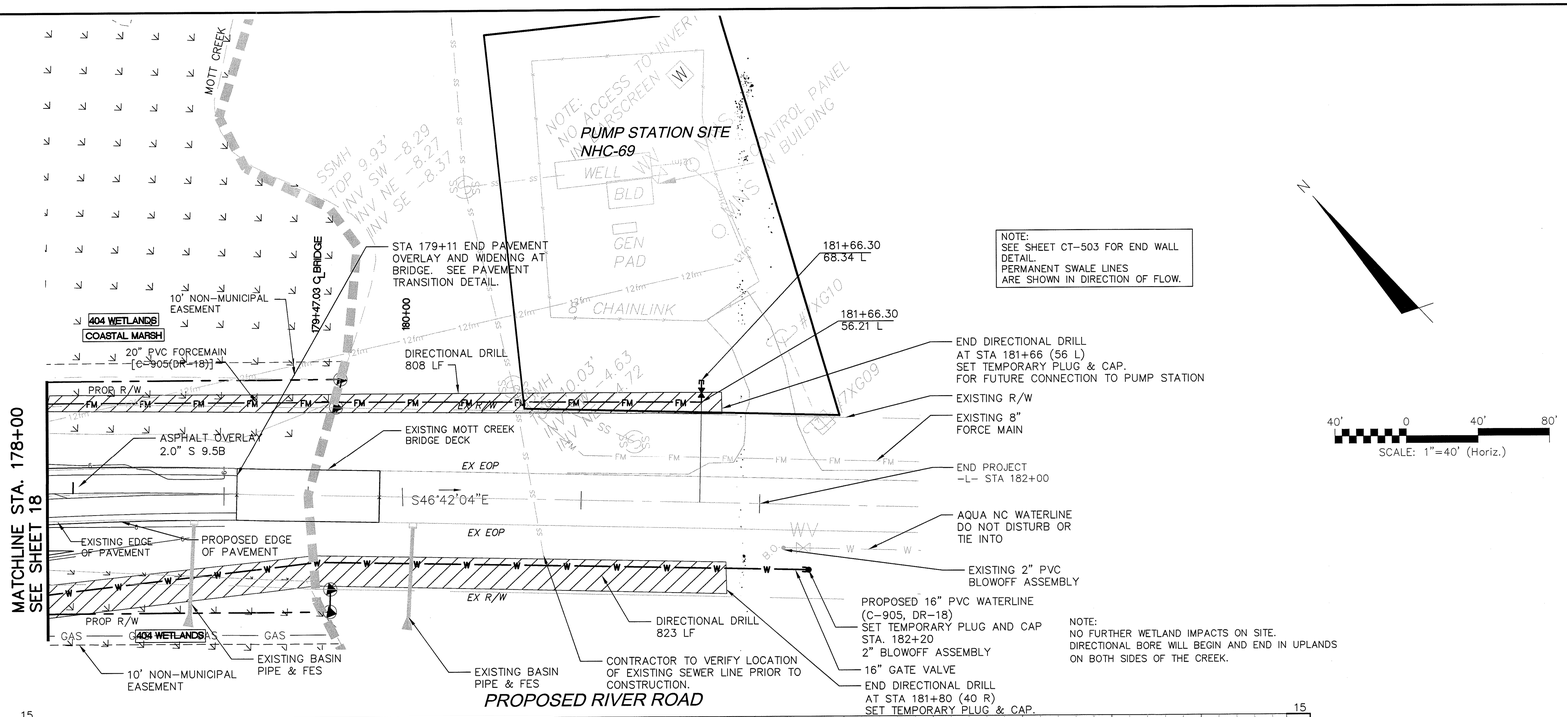

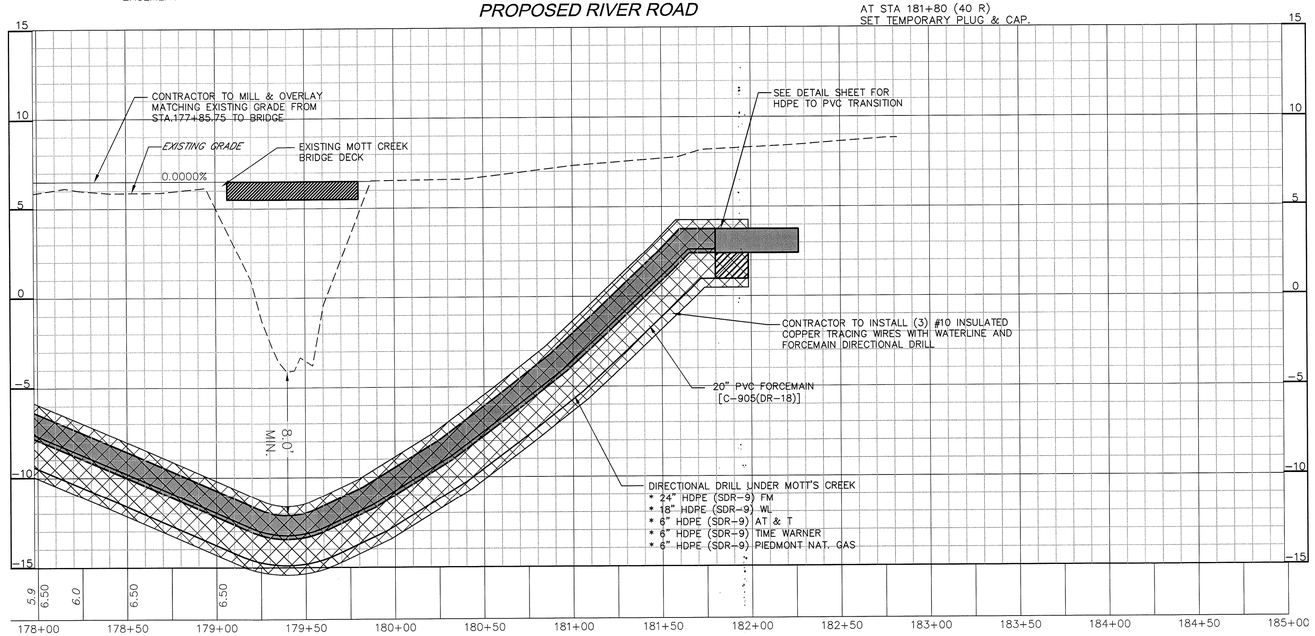

PROPOSED RIVER ROAD

REV.NO.	DESCRIPTIONS REVISIONS	DATE
G	REVISED PER DISTRICT NCDOT COMMENTS	10/14/08
F	REVISED WATERLINE AND CROSS SECTIONS	09/03/08
E	REVISED PER NCDOT HYDRAULICS COMMENTS 7-15-08	7-28-08
D	REVISION 2 PLANS	07/09/08
	PLAN SUBMITTAL TO NCDOT HYDRAULICS	05/23/08
	REVISED PER NHC SEWER COMMENTS	3/28/08
C	REVISED PER NCDOT COMMENTS	12/20/07
B	UPDATED UTILITIES PER NEW HANOVER COUNTY AND CITY OF WILMINGTON	10/5/07
A	FINAL DESIGN PLAN - SUBMITTAL TO NCDOT	6/27/07

SEAL

SEAL
NORTH CAROLINA PROFESSIONAL SEAL 22574 ENGINEER RICHARD M. COLLIER

McKIM&CREED
243 North Front Street
Wilmington, North Carolina 28401
Phone: (910)343-1048 , Fax: (910)251-8282
AA0002667 EB0006691
www.mckimcreed.com

Newland COMMUNITIES
AT THE HEART OF GREAT LIVING

RIVER ROAD (MOTT CREEK)

ROADWAY PLAN & PROFILE PROPOSED RIVER ROAD STA 178+00 – STA 182+00

ISSUED FOR PERMITTING
NOT FOR CONSTRUCTION

DATE:	JUNE 2007
MCE PROJ. #	02735-0007
DRAWN	BCE
DESIGNED	BCE
CHECKED	RMC
PROJ. MGR.	RMC

SCALE
HORIZONTAL: 1"=40'
VERTICAL: 1"=4'

M&C FILE NUMBER CU-715
DRAWING NUMBER 19

STATUS: FINAL DESIGN PLANS
REVISION G

STATE OF NORTH CAROLINA
DEPT. OF TRANSPORTATION
DIVISION OF HIGHWAYS
RALEIGH, N.C.

1-02

ENGLISH STANDARD DRAWING FOR
METHOD OF PIPE INSTALLATION
METHOD 'A'

SHEET 1 OF 1
300.01

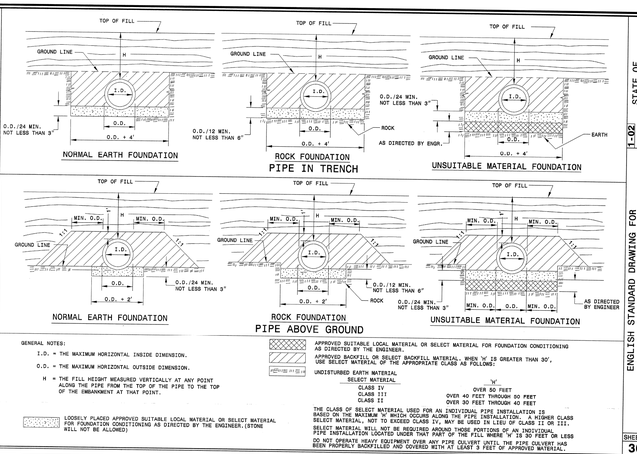

GENERAL NOTES:

I.D. = THE MAXIMUM HORIZONTAL INSIDE DIMENSION.

O.D. = THE MAXIMUM HORIZONTAL OUTSIDE DIMENSION.

H = THE FILL HEIGHT MEASURED VERTICALLY AT ANY POINT ALONG THE PIPE FROM THE TOP OF THE PIPE TO THE TOP OF THE EMBANKMENT AT THAT POINT.

LOOSELY PLACED APPROVED SUITABLE LOCAL MATERIAL OR SELECT MATERIAL FOR FOUNDATION CONDITIONING AS DIRECTED BY THE ENGINEER. (STONE WILL NOT BE ALLOWED)

APPROVED SUITABLE LOCAL MATERIAL OR SELECT MATERIAL FOR FOUNDATION CONDITIONING AS DIRECTED BY THE ENGINEER.

APPROVED BACKFILL OR SELECT BACKFILL MATERIAL. WHEN 'H' IS GREATER THAN 30', USE SELECT MATERIAL OF THE APPROPRIATE CLASS AS FOLLOWS:

UNDISTURBED EARTH MATERIAL

SELECT MATERIAL	'H'
CLASS IV	OVER 30 FEET
CLASS III	OVER 40 FEET THROUGH 50 FEET
CLASS II	OVER 30 FEET THROUGH 40 FEET

THE CLASS OF SELECT MATERIAL USED FOR AN INDIVIDUAL PIPE INSTALLATION IS BASED ON THE MAXIMUM 'H' WHICH OCCURS ALONG THE PIPE INSTALLATION. THE LOWER CLASS SELECT MATERIAL, NOT TO EXCEED CLASS IV, MAY BE USED IN LIEU OF CLASS II OR III.

SELECT MATERIAL WILL NOT BE REQUIRED AROUND THOSE PORTIONS OF A 'H' INDIVIDUAL PIPE INSTALLATION LOCATED UNDER THAT PART OF THE FILL WHERE 'H' IS 30 FEET OR LESS

DO NOT OPERATE HEAVY EQUIPMENT OVER ANY PIPE CULVERT UNTIL THE PIPE CULVERT HAS BEEN PROPERLY BACKFILLED AND COVERED WITH AT LEAST 3 FEET OF APPROVED MATERIAL.

STATE OF NORTH CAROLINA
DEPT. OF TRANSPORTATION
DIVISION OF HIGHWAYS
RALEIGH, N.C.

1-02

ENGLISH STANDARD DRAWING FOR
CONCRETE CATCH BASIN
12" THRU 54" PIPE

SHEET 1 OF 2
840.02

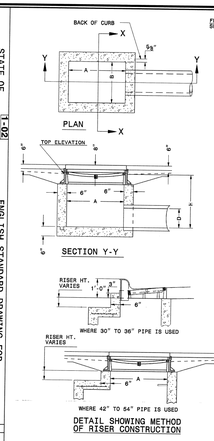

GENERAL NOTES:

USE CLASS "B" CONCRETE THROUGHOUT.

PROVIDE ALL CATCH BASINS OVER 3'-6" IN DEPTH WITH STEPS 12" ON CENTER. USE STEPS WHICH COMPLY WITH STD. DRAWING 840.66.

OPTIONAL CONSTRUCTION - MONOLITHIC POUR, 3" KEYWAY, OR #4 BAR DOWELS AT 12" CENTERS AS DIRECTED BY THE ENGINEER.

USE FORMS FOR THE CONSTRUCTION OF THE BOTTOM SLAB.

IF REINFORCED CONCRETE PIPE IS SET IN BOTTOM SLAB OF BOX, ADD TO SLAB AS SHOWN ON STD. NO. 840.00.

USE TYPE "E", "F" AND "G" GRATES UNLESS OTHERWISE INDICATED.

FOR 8'-0" IN HEIGHT OR LESS USE 6" WALLS AND BOTTOM SLAB. OVER 8'-0" IN HEIGHT USE 8" WALLS AND BOTTOM SLAB. ADJUST QUANTITIES ACCORDINGLY.

CONSTRUCT WITH PIPE CROWNS MATCHING.

CHAMFER ALL EXPOSED CORNERS 1".

DRAWING NOT TO SCALE.

STATE OF NORTH CAROLINA
DEPT. OF TRANSPORTATION
DIVISION OF HIGHWAYS
RALEIGH, N.C.

1-02

ENGLISH STANDARD DRAWING FOR
CONCRETE CATCH BASIN
12" THRU 54" PIPE

SHEET 2 OF 2
840.02

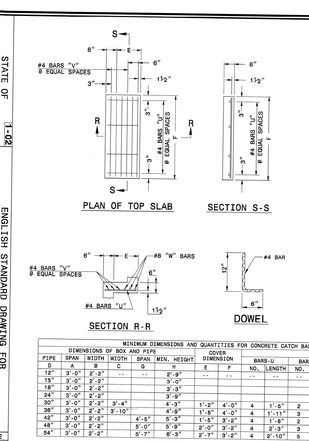

MINIMUM DIMENSIONS AND QUANTITIES FOR CONCRETE CATCH BASIN(BASED ON MIN. HEIGHT, H, WITH NO RISER)*																		
DIMENSIONS OF BOX AND PIPE								TOP SLAB DIMENSIONS	BARS-U		BARS-V		BARS-W			CU. YDS. CONC. IN BOX		DEDUCTIONS ONE PIPE
PIPE	SPAN	WIDTH	WIDTH	SPAN	MIN. HEIGHT				NO.	LENGTH	NO.	LENGTH	NO.	LENGTH	TOTAL LBS.	TOP SLAB	BOTTOM SLAB	C.Y.	R.C.
D	A	B	C	G	H	E	F											
12"	3'-0"	2'-2"	--	--	2'-3"	--	--	--	--	--	--	--	--	--	--	0.281	0.281	0.883	1.164
15"	3'-0"	2'-2"			3'-0"											0.281	0.281	0.983	1.244
18"	3'-0"	2'-2"			3'-3"											0.281	0.281	1.043	1.324
24"	3'-0"	2'-2"			3'-9"											0.281	0.281	1.204	1.485
30"	3'-0"	2'-2"	3'-4"		4'-3"	1'-2"	4'-4"	4	1'-6"	3	4'-1"	3	4'-1"	45	0.147	0.374	0.551	1.606	2.817
36"	3'-0"	2'-2"	3'-10"		4'-9"	1'-3"	4'-4"	4	1'-9"	3	4'-1"	3	4'-1"	49	0.187	0.415	0.602	1.914	3.516
42"	3'-0"	2'-2"		4'-5"	5'-3"	1'-5"	3'-6"	4	1'-9"	3	3'-3"	3	3'-3"	38	0.156	0.373	0.508	2.152	3.660
48"	3'-0"	2'-2"		5'-0"	5'-9"	2'-0"	3'-6"	4	2'-6"	4	3'-3"	3	3'-3"	41	0.172	0.410	0.563	2.413	3.998
54"	3'-0"	2'-2"		5'-7"	6'-3"	2'-7"	3'-6"	4	3'-0"	6	3'-3"	3	3'-3"	47	0.211	0.448	0.659	2.606	3.485

| | | | | | | | | | | | | | | | | | |

STATE OF NORTH CAROLINA
DEPT. OF TRANSPORTATION
DIVISION OF HIGHWAYS
RALEIGH, N.C.

1-02

ENGLISH STANDARD DRAWING FOR

SPECIAL SEDIMENT CONTROL FENCE

SHEET 1 OF 1

1606.01

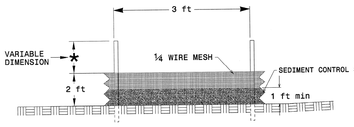

GENERAL NOTES:

USE NO. 5 OR NO. 57 STONE FOR SEDIMENT CONTROL AND PAY FOR AT THE CONTRACT UNIT PRICE PER TON SEDIMENT CONTROL STONE.

USE HARDWARE CLOTH 24 GAUGE WIRE MESH WITH ¼ INCH MESH OPENINGS.

INSTALL 5 FT. SELF FASTENER ANGLE STEEL POST 2 FT. DEEP MINIMUM.

INSTALL 6 FT. LONG, 3 IN. DIA. WOOD POSTS 3 FT. DEEP MINIMUM.

SPACE POSTS A MAXIMUM OF 3 FT.

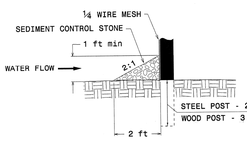

STATE OF NORTH CAROLINA
DEPT. OF TRANSPORTATION
DIVISION OF HIGHWAYS
RALEIGH, N.C.

1-02

ENGLISH STANDARD DRAWING FOR

GUIDE FOR RIP RAP AT PIPE OUTLETS

SHEET 1 OF 1

876.02

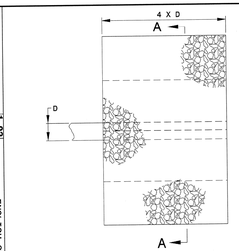

SECTION A-A

PIPE OUTLET WITH DITCH

H= RIP RAP TO TOP OF PIPE (MAX. H = D + T)
T= 15" CLASS I RIP RAP, UNLESS OTHERWISE SHOWN ON PLANS
T= 12" CLASS 'B' RIP RAP, UNLESS OTHERWISE SHOWN ON PLANS

D	OUTLET W/DITCH				OUTLET W/O DITCH			
	CLASS 'B' RIP RAP		CLASS I RIP RAP		CLASS 'B' RIP RAP		CLASS I RIP RAP	
	TONS	FT³/FT (CY/FT)	S.Y.	FT³/FT (CY/FT)	TONS	FT³/FT (CY/FT)	S.Y.	FT³/FT (CY/FT)
12"	2	5	2	5	1	4	2	1 4
15"	2	7	3	7	1	5	3	2 6
18"	3	10	9	4	10	2	7	4 2 8
24"	5	14	15	7	15	3	11	7 4 12
30"	8	21	21	11	22	5	16	11 7 17
36"	11	28	29	15	30	7	22	16 10 23
42"	15	37	39	20	39	10	28	22 13 30
48"	-	-	49	26	50	-	-	28 17 38
54"	-	-	60	33	62	-	-	36 21 47
60"	-	-	73	40	75	-	-	44 26 56
66"	-	-	87	48	89	-	-	54 32 67
72"	-	-	102	57	104	-	-	64 38 78

NOTE:
FOR CALCULATION PURPOSES
CLASS 'B' RIP RAP = 100 LBS./FT³
CLASS I RIP RAP = 105 LBS./FT³

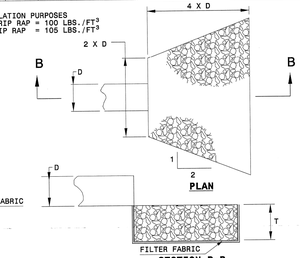

SECTION B-B

PIPE OUTLET WITHOUT DITCH

STATE OF NORTH CAROLINA
DEPT. OF TRANSPORTATION
DIVISION OF HIGHWAYS
RALEIGH, N.C.

1-02

ENGLISH STANDARD DRAWING FOR

GUIDE FOR RIP RAP AT PIPE OUTLETS

SHEET 1 OF 1

876.02

STATE OF NORTH CAROLINA
DEPT. OF TRANSPORTATION
DIVISION OF HIGHWAYS
RALEIGH, N.C.

1-02

ENGLISH STANDARD DRAWING FOR

TEMPORARY LANE CLOSURES

2-LANE, 2-WAY ROADWAY-1 LANE CLOSED

SHEET 1 OF 7

1101.02

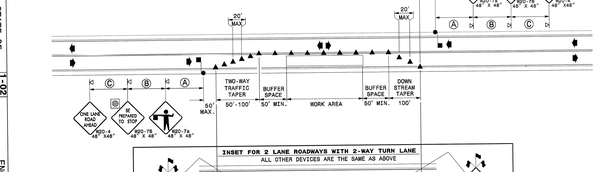

GENERAL NOTES

-REFER TO STD. DWG. 1101.11-SHEET 4, FOR SIGN SPACING.
-INSTALL LANE CLOSURES WITH THE TRAFFIC FLOW, BEGINNING WITH DEVICES ON THE UPSTREAM SIDE OF TRAFFIC.
-REMOVE LANE CLOSURES AGAINST THE TRAFFIC FLOW, BEGINNING WITH DEVICES ON THE DOWNSTREAM SIDE OF TRAFFIC.
-PLACE CONES THRU THE WORK AREA AT THE MAXIMUM SPACING EQUAL IN FEET TO 2 TIMES THE POSTED SPEED LIMIT.
-EXTEND LANE CLOSURES AT THE BUFFER SPACE SUCH THAT STOPPING SIGHT DISTANCE IS PROVIDED TO THE FLAGGER. (REFER TO STD. DWG. 1101.11-SHEET 2).
-DO NOT STOP TRAFFIC IN ANY ONE DIRECTION FOR MORE THAN 5 MINUTES AT A TIME.
-USE PILOT CARS WHEN DIRECTED BY THE ENGINEER.
-USE FLAGGERS TO CONTROL TRAFFIC AT INTERSECTIONS AFFECTED BY THE LANE CLOSURE. ACCOMPANY FLAGGERS UTILIZED AT INTERSECTIONS WITH FLAGGER AHEAD SIGNS (W20-7A) PLACED APPROXIMATELY 250 FT. IN ADVANCE OF THE FLAGGER. WHERE INTERSECTIONS ARE SIGNALIZED, PLACE SIGNALS IN THE FLASH MODE.

LEGEND

- WARNING FLAGS
- CONE
- PORTABLE SIGN
- FLAGGER
- TYPE B WARNING LIGHT (FOR NIGHT USE)
- DIRECTION OF TRAFFIC FLOW

STATE OF NORTH CAROLINA
DEPT. OF TRANSPORTATION
DIVISION OF HIGHWAYS
RALEIGH, N.C.

1-02

ENGLISH STANDARD DRAWING FOR

ENGLISH STANDARD DRAWING FOR TEMPORARY LANE CLOSURES

2-LANE, 2-WAY ROADWAY-1 LANE CLOSED

SHEET 1 OF 7

1101.02

STATE OF NORTH CAROLINA
DEPT. OF TRANSPORTATION
DIVISION OF HIGHWAYS
RALEIGH, N.C.

7-06

ENGLISH STANDARD DRAWING FOR

WHEELCHAIR RAMP

CURB CUT

SHEET 1 OF 4

848.05

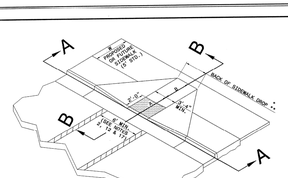

ISOMETRIC VIEW

NOTES:
1. DETECTABLE WARNING DOMES SHALL COVER 2'-0" LENGTH AND FULL WIDTH OF THE RAMP FLOOR AS SHOWN ON THE DETAILS.
2. OBTAIN 70% CONTRAST VISIBILITY WITH ADJOINING SURFACE, EITHER LIGHT-ON-DARK, OR DARK-ON-LIGHT SEQUENCE COVERING THE ENTIRE RAMP.

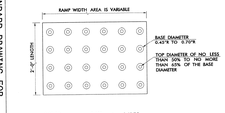

DETECTABLE WARNING DOMES

W	A	W+A+5"	X	D
4'	0.0'	5.4'	3.4'	5.0"
6'	0.0'	6.4'	4.4'	6.0"**
6'	0.0'	6.4'	5.4'	6.0"**
6'	0.0'	6.4'	7.3'	6.0"**
5'	2.0'	8.4'	7.4'	8.0"
5'	3.0'	9.3'	8.4'	9.1"
5'	4.0'	9.4'	8.4'	9.8"
5'	4.5'	10.3'	8.7'	9.4"
5'	5.0'	10.4'	8.8'	9.1"

B = X-(A+5")
B = DISTANCE FROM FRONT EDGE OF SIDEWALK TO BACK OF DROP REQUIRED FOR ALL SIDEWALK SLOPES.
* BACK OF SIDEWALK DROP REQUIRED FOR ALL SIDEWALK SLOPES
** BACK OF SIDEWALK DROP REQUIRED FOR SIDEWALK SLOPES 0.04.

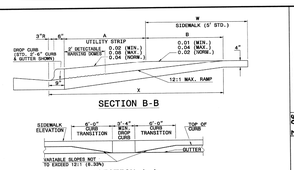

STATE OF NORTH CAROLINA
DEPT. OF TRANSPORTATION
DIVISION OF HIGHWAYS
RALEIGH, N.C.

7-06

ENGLISH STANDARD DRAWING FOR

WHEELCHAIR RAMP

CURB CUT

SHEET 1 OF 4

848.05

SECTION B-B

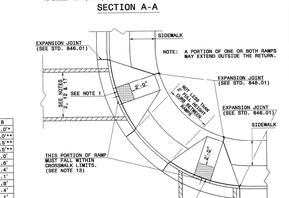

SECTION A-A

STATE OF NORTH CAROLINA
DEPT. OF TRANSPORTATION
DIVISION OF HIGHWAYS
RALEIGH, N.C.

7-06

ENGLISH STANDARD DRAWING FOR

WHEELCHAIR RAMP

CURB CUT

SHEET 2 OF 4

848.05

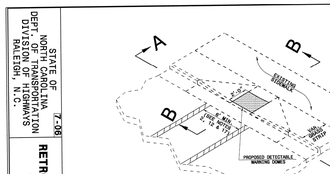

ISOMETRIC VIEW

NOTES:
1. DETECTABLE WARNING DOMES SHALL COVER 2'-0" LENGTH AND FULL WIDTH OF THE RAMP FLOOR AS SHOWN ON THE DETAILS.
2. OBTAIN 70% CONTRAST VISIBILITY WITH ADJOINING SURFACE, EITHER LIGHT-ON-DARK, OR DARK-ON-LIGHT SEQUENCE COVERING THE ENTIRE RAMP.

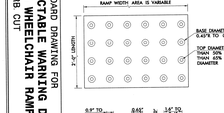

DETECTABLE WARNING DOMES

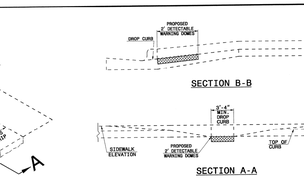

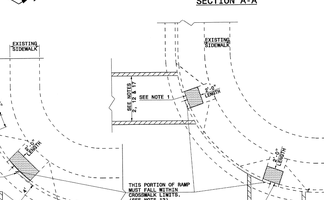

SECTION B-B

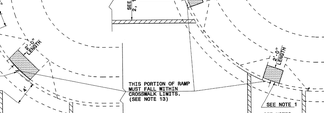

SECTION A-A

STATE OF NORTH CAROLINA
DEPT. OF TRANSPORTATION
DIVISION OF HIGHWAYS
RALEIGH, N.C.

7-06

ENGLISH STANDARD DRAWING FOR

RETROFITTING DETECTABLE WARNING DOMES ONTO EXISTING WHEELCHAIR RAMP

CURB CUT

SHEET 2 OF 4

848.05

STATE OF NORTH CAROLINA
DEPT. OF TRANSPORTATION
DIVISION OF HIGHWAYS
RALEIGH, N.C.

7-06

ENGLISH STANDARD DRAWING FOR

WHEELCHAIR RAMP

CURB CUT

SHEET 3 OF 4

848.05

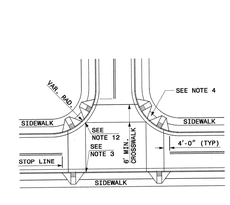

DETAIL SHOWING TYPICAL LOCATION OF WHEELCHAIR RAMPS, PEDESTRIAN CROSSWALKS AND STOP LINES FOR TEE INTERSECTIONS

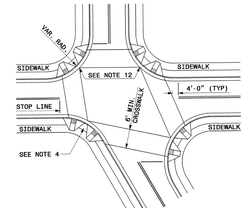

DETAIL SHOWING TYPICAL LOCATION OF WHEELCHAIR RAMPS, PEDESTRIAN CROSSWALKS AND STOP LINES

ROADWAY PLAN SYMBOL (CCFR) CURB CUT FOR FUTURE RAMP

ROADWAY PLAN SYMBOL (WCR) FOR PROPOSED WHEELCHAIR RAMP

PROPOSED WHEELCHAIR RAMP
PROPOSED OR FUTURE SIDEWALK

ALLOWABLE LOCATIONS
DUAL RAMP RADII.....ANY

STATE OF NORTH CAROLINA
DEPT. OF TRANSPORTATION
DIVISION OF HIGHWAYS
RALEIGH, N.C.

7-06

ENGLISH STANDARD DRAWING FOR

WHEELCHAIR RAMP

CURB CUT

SHEET 3 OF 4

848.05

STATE OF NORTH CAROLINA
DEPT. OF TRANSPORTATION
DIVISION OF HIGHWAYS
RALEIGH, N.C.

7-06

ENGLISH STANDARD DRAWING FOR

WHEELCHAIR RAMP

CURB CUT

SHEET 4 OF 4

848.05

NOTES:

1. CONSTRUCT THE WALKING SURFACE WITH SLIP RESISTANTANCE AND A 70% CONTRASTING COLOR TO THE SIDEWALK.
2. CROSSWALK WIDTHS AND CONFIGURATION VARY BUT MUST CONFORM TO TRAFFIC DESIGN STANDARDS.
3. NORTH CAROLINA GENERAL STATUTE 136-44.14 REQUIRES THAT ALL STREET CURBS BEING CONSTRUCTED OR RECONSTRUCTED FOR MAINTENANCE PROCEDURES, TRAFFIC OPERATIONS, REPAIRS, CORRECTION OF UTILITIES OR ALTERED FOR ANY REASON AFTER SEPTEMBER 1, 1973 SHALL PROVIDE WHEELCHAIR RAMPS FOR THE PHYSICALLY DISABLED AT ALL INTERSECTIONS WHERE BOTH CURB AND GUTTER AND SIDEWALKS ARE PROVIDED AND AT OTHER POINTS OF PEDESTRIAN FLOW.

   IN ADDITION, SECTION 228 OF THE 1973 FEDERAL AID HIGHWAY SAFETY ACT REQUIRES PROVISION OF CURB RAMPS ON ANY CURB CONSTRUCTION AFTER JULY 1,1976 WHETHER A SIDEWALK IS PROPOSED INITIALLY OR IS PLANNED FOR A FUTURE DATE.

   THE AMERICANS WITH DISABILITIES ACT (ADA) OF 1990 EXTENDS TO INDIVIDUALS WITH DISABILITIES. COMPREHENSIVE CIVIL RIGHTS PROTECTIONS SIMILAR TO THOSE PROVIDED TO PERSONS ON THE BASIS OF RACE, SEX, NATIONAL ORIGIN AND RELIGION UNDER THE CIVIL RIGHTS ACT OF 1964. THESE CURB RAMPS HAVE BEEN DESIGNED TO COMPLY WITH THE CURRENT ADA STANDARDS.
4. PROVIDE WHEELCHAIR RAMPS AT LOCATIONS AS SHOWN ON THE PLANS OR AS DIRECTED BY THE ENGINEER. LOCATE WHEELCHAIR RAMPS AS DIRECTED BY THE ENGINEER WHERE EXISTING LIGHT POLES, FIRE HYDRANTS, DROP INLETS, ETC. AFFECT PLACEMENT. WHERE TWO RAMPS ARE INSTALLED PLACE NOT LESS THAN 2 FEET OF FULL HEIGHT CURB BETWEEN THE RAMPS. PLACE DUAL RAMPS AS NEAR PERPENDICULAR TO THE TRAVEL LANE BEING CROSSED AS POSSIBLE.
5. PAY FOR ALL VARIABLE DEPTH CONCRETE USED FOR CONSTRUCTION OF WHEELCHAIR RAMPS AS CONCRETE WHEELCHAIR RAMPS. (SQ. YDS.)
6. PAY FOR ALL DEPRESSED CURBS AT WHEELCHAIR RAMPS AS THE TYPE CURB AND GUTTER USED ADJACENT TO DEPRESSED CURB. (LN. FT.)
7. SUCH PRICES AND PAYMENTS IS CONSIDERED FULL COMPENSATION FOR ALL MATERIALS, LABOR, EQUIPMENT, TOOLS AND INCIDENTALS NECESSARY TO SATISFACTORILY COMPLETE THE WORK.
8. DO NOT EXCEED 0.08 (12:1) SLOPE ON THE WHEELCHAIR RAMP IN RELATIONSHIP TO THE GRADE OF THE STREET.
9. CONSTRUCT WHEELCHAIR RAMPS 40" (3'-4") OR GREATER FOR DUAL RAMPS.
10. USE CLASS "B" CONCRETE WITH A SIDEWALK FINISH IN ORDER TO OBTAIN A ROUGH NON-SKID TYPE SURFACE.
11. PLACE A ½" EXPANSION JOINT WHERE THE CONCRETE WHEELCHAIR RAMP JOINS THE CURB AND AS SHOWN ON STD. DWG. 848.01.
12. PLACE THE INSIDE PEDESTRIAN CROSSWALK LINES NO CLOSER IN THE INTERSECTION BY BISECTING THE INTERSECTION RADII, WITH ALLOWANCE OF A 4' CLEAR ZONE IN THE VEHICULAR TRAVELWAY WHEN ONE RAMP IS INSTALLED. (SEE NOTE 17)
13. COORDINATE THE CURB CUT AND THE PEDESTRIAN CROSSWALK LINES SO THE FLOOR OF THE WHEELCHAIR RAMP WILL FALL WITHIN THE PEDESTRIAN CROSSWALK LINES. PLACE DIAGONAL RAMPS WITH FLARED SIDES SO 24" OF FULL HEIGHT CURB FALLS WITHIN THE CROSSWALK MARKINGS ON EACH SIDE OF THE FLARES.
14. CONSTRUCT THE PEDESTRIAN CROSSWALK A MINIMUM OF 6 FEET. A CROSSWALK WIDTH OF 10 FEET OR GREATER IS DESIRABLE.
15. USE STOP LINES, NORMALLY PERPENDICULAR TO THE LANE LINES, WHERE IT IS IMPORTANT TO INDICATE THE POINT BEHIND WHICH VEHICLES ARE REQUIRED TO STOP IN COMPLIANCE WITH A TRAFFIC SIGNAL, STOP SIGN OR OTHER LEGAL REQUIREMENT. AN UNUSUAL APPROACH SKEW MAY REQUIRE THE PLACEMENT OF THE STOP LINE TO BE PARALLEL TO THE INTERSECTING ROADWAY.
16. TERMINATE PARKING A MINIMUM OF 20 FEET BACK OF PEDESTRIAN CROSSWALK.
17. PLACE ALL PAVEMENT MARKINGS IN ACCORDANCE WITH THE LATEST EDITION OF THE MANUAL OF UNIFORM TRAFFIC CONTROL DEVICES (MUTCD) PUBLISHED BY THE FEDERAL HIGHWAY ADMINISTRATION AND THE NORTH CAROLINA SUPPLEMENT TO THE MUTCD.

STATE OF NORTH CAROLINA
DEPT. OF TRANSPORTATION
DIVISION OF HIGHWAYS
RALEIGH, N.C.

7-06

ENGLISH STANDARD DRAWING FOR

WHEELCHAIR RAMP

CURB CUT

SHEET 4 OF 4

848.05

STATE OF NORTH CAROLINA
DEPT. OF TRANSPORTATION
DIVISION OF HIGHWAYS
RALEIGH, N.C.

7-06

ENGLISH STANDARD DRAWING FOR

PAVEMENT MARKINGS

PEDESTRIAN CROSSWALKS

SHEET 1 OF 1

1205.07

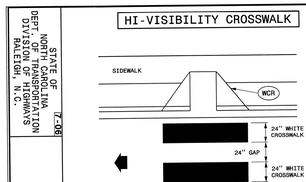

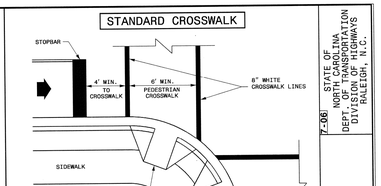

GENERAL NOTES

1- THE MINIMUM WIDTH OF STANDARD CROSSWALKS IS 6 FEET. THE MINIMUM WIDTH OF HI-VISIBILITY CROSSWALKS IS 10 FEET.

2- CENTER CROSSWALKS TO THEIR CORRESPONDING WHEELCHAIR RAMPS, BUT DO NOT SET THEM WITHIN THE INTERSECTION AREA ESTABLISHED BY BISECTING THE INTERSECTION RADII.

3- PLACE STOP BARS A MINIMUM OF 4 FEET FROM NEAREST CROSSWALK LINE, BUT NOT WITHIN THE AREA OF A WHEELCHAIR RAMP. PLACE STOP BARS PARALLEL TO CROSSWALK LINES, BUT CAN BE PLACED PERPENDICULAR TO TRAVEL LANES.

4- COORDINATE PLACEMENT OF CROSSWALKS IN ALL CASES WITH THE LOCATION OF WHEELCHAIR RAMPS. (SEE SIGNAL PLANS).

LEGEND

- DIRECTION OF TRAFFIC FLOW
- (WCR) WHEELCHAIR RAMP

STATE OF NORTH CAROLINA
DEPT. OF TRANSPORTATION
DIVISION OF HIGHWAYS
RALEIGH, N.C.

7-06

ENGLISH STANDARD DRAWING FOR

PAVEMENT MARKINGS

PEDESTRIAN CROSSWALKS

SHEET 1 OF 1

1205.07

STATE OF NORTH CAROLINA
DEPT. OF TRANSPORTATION
DIVISION OF HIGHWAYS
RALEIGH, N.C.

7-06

ENGLISH STANDARD DRAWING FOR

METHOD FOR PLACEMENT OF DROP INLETS IN CONCRETE ISLANDS

SHEET 1 OF 1

852.06

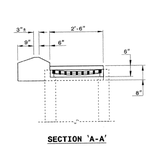

SECTION 'A-A'

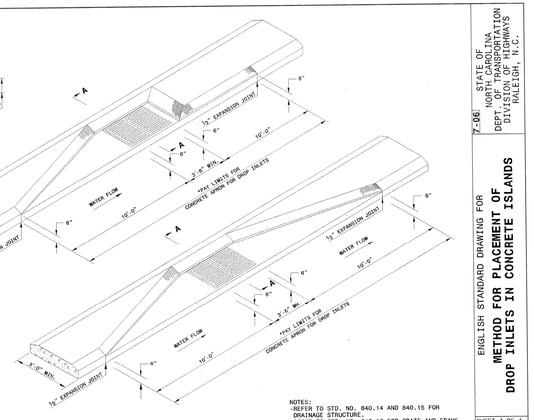

*CONCRETE APRON IS INCIDENTAL TO CONSTRUCTION OF THE DRAINAGE STRUCTURE

NOTES:
-REFER TO STD. NO. 840.14 AND 840.15 FOR DRAINAGE STRUCTURE.
-REFER TO STD. NO. 840.16 FOR GRATE AND FRAME.

STATE OF NORTH CAROLINA
DEPT. OF TRANSPORTATION
DIVISION OF HIGHWAYS
RALEIGH, N.C.

7-06

ENGLISH STANDARD DRAWING FOR

METHOD FOR PLACEMENT OF DROP INLETS IN CONCRETE ISLANDS

SHEET 1 OF 1

852.06

REV.NO.	DESCRIPTIONS REVISIONS	DATE
F	WATERLINE AND CROSS SECTION REVISIONS	09/08/09
E	REVISED PER NCDOT HYDRAULICS COMMENTS 07/15/08	07/28/08
D	REVISIONS 2 PLAN SET RELEASE	07/09/08

SEAL

SEAL
NORTH CAROLINA PROFESSIONAL
SEAL 22574
ENGINEER
RICHARD C. MILLER
9/9/08

McKIM & CREED
243 North Front Street
Wilmington, North Carolina 28401
Phone: (910)343-1048 , Fax: (910)251-8282
AA0002667 EB0006691
www.mckimcreed.com

Newland COMMUNITIES
AT THE HEART OF GREAT LIVING

RIVER ROAD

ROADWAY DETAILS

DATE:	JUNE 2007
MCE PROJ. #	02735-0007
DRAWN	BCE
DESIGNED	BCE
CHECKED	RMC
PROJ. MGR.	RMC

SCALE
HORIZONTAL: 1"=40'
VERTICAL: NA

M&C FILE NUMBER CT-502
DRAWING NUMBER 21

STATUS: FINAL DESIGN PLANS
REVISION F

S:\2735\0007\80-Drawings\CT502-273500007.dwg, 9/9/2008 3:51:47 PM, Xerox 6204 Wide Format with FreeFlow Access.pc3

STATE OF NORTH CAROLINA DEPT. OF TRANSPORTATION DIVISION OF HIGHWAYS RALEIGH, N.C. — 7-06

ENGLISH STANDARD DRAWING FOR CONCRETE ENDWALL FOR SINGLE AND DOUBLE PIPE CULVERTS
15" THRU 48" PIPE - 90° SKEW

SHEET 1 OF 3 — 838.01

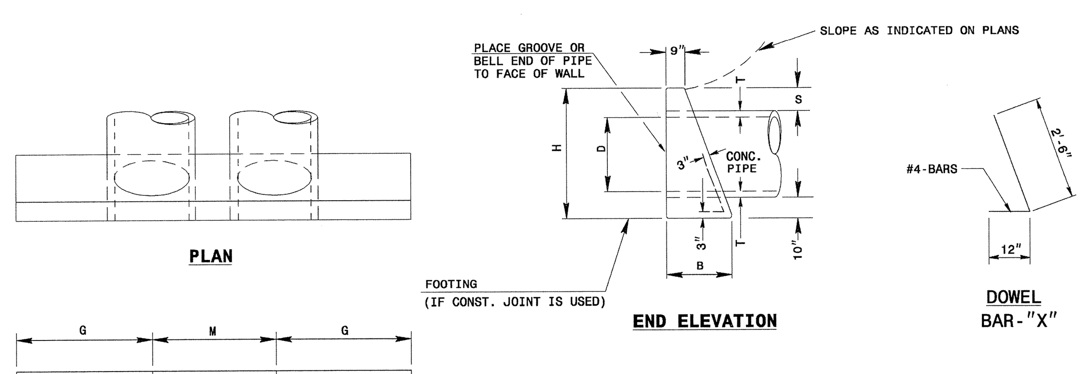

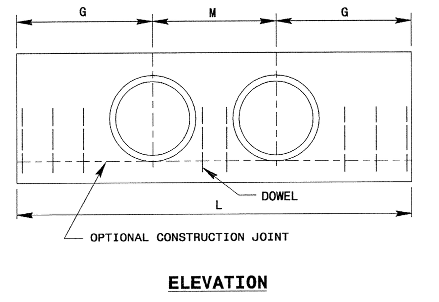

DOWELS IN ENDWALL WITH REINFORCED CONCRETE PIPE																			
LOC.	PIPE DIA.	SINGLE PIPE 15"	18"	24"	30"	36"	42"		48"		DOUBLE PIPE 15"	18"	24"	30"	36"	42"		48"	
	BARS	"X"	"X"	"X"	"X"	"X"	"X"	Y*	"X"	Y*	"X"	"X"	"X"	"X"	"X"	"X"	Y*	"X"	Y*
G	QTY.	2	2	3	3	4	4		5		2	2	3	3	4	4		5	
M	QTY.	-	-	-	-	-	-	2	-	2	1	1	2	2	2	2	2	3	2
G	QTY.	2	2	3	3	4	4		5		2	2	3	3	4	4		5	
TOTAL LBS.		9	9	14	14	19	55		65		12	12	19	19	23	77		92	

DIMENSIONS AND CONCRETE QUANTITIES USING CONCRETE PIPE										
COMMON DIMENSIONS						SINGLE PIPE		DOUBLE PIPE		
D	H	B	G	T	S	L	YD³	M	L	YD³
15"	3'-3"	1'-8"	2'-9"	2¼"	9½"	5'-6"	0.7	2'-2"	7'-8"	1.0
18"	3'-7"	1'-10"	3'-2"	2½"	10"	6'-4"	1.0	2'-7"	8'-11"	1.3
24"	4'-2"	2'-1"	4'-0"	3"	10"	8'-0"	1.5	3'-5"	11'-5"	2.0
30"	5'-0"	2'-6"	4'-7"	4¼"	11½"	9'-2"	2.3	4'-3"	13'-5"	3.1
36"	5'-8"	2'-8"	5'-6"	4¾"	11½"	11'-0"	3.4	5'-0"	16'-0"	4.5
42"	6'-2"	3'-1"	6'-4"	5¼"	11½"	12'-8"	4.5	5'-10"	18'-6"	6.0
48"	6'-9"	3'-5"	7'-2"	5¾"	11½"	14'-4"	6.0	6'-8"	21'-0"	8.0

*SEE SHEET 3

STATE OF NORTH CAROLINA DEPT. OF TRANSPORTATION DIVISION OF HIGHWAYS RALEIGH, N.C. 7-06 ENGLISH STANDARD DRAWING FOR CONCRETE ENDWALL FOR SINGLE AND DOUBLE PIPE CULVERTS 15" THRU 48" PIPE - 90° SKEW SHEET 1 OF 3 838.01

STATE OF NORTH CAROLINA DEPT. OF TRANSPORTATION DIVISION OF HIGHWAYS RALEIGH, N.C. — 7-06

ENGLISH STANDARD DRAWING FOR CONCRETE ENDWALL FOR SINGLE AND DOUBLE PIPE CULVERTS
15" THRU 48" PIPE - 90° SKEW

SHEET 2 OF 3 — 838.01

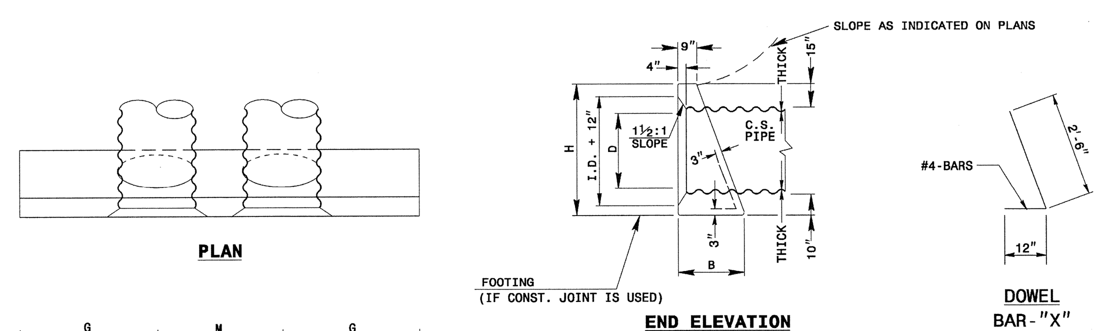

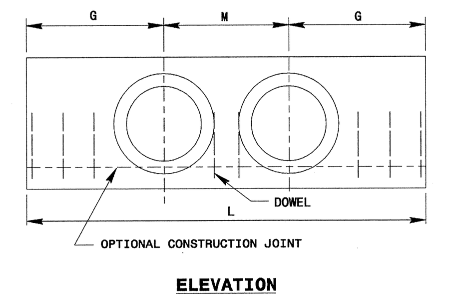

DOWELS IN ENDWALL WITH C. S. PIPE																			
LOC.	PIPE DIA.	SINGLE PIPE 15"	18"	24"	30"	36"	42"		48"		DOUBLE PIPE 15"	18"	24"	30"	36"	42"		48"	
	BARS	"X"	"X"	"X"	"X"	"X"	"X"	Y*	"X"	Y*	"X"	"X"	"X"	"X"	"X"	"X"	Y*	"X"	Y*
G	QTY.	2	2	3	3	4	4		5		2	2	3	3	4	4		5	
M	QTY.	-	-	-	-	-	-	2	-	2	1	1	1	2	2	2	2	2	2
G	QTY.	2	2	3	3	4	4		5		2	2	3	3	4	4		5	
TOTAL LBS.		9	9	14	14	19	53		62		12	12	16	19	23	73		85	

DIMENSIONS AND CONCRETE QUANTITIES USING CORRUGATED STEEL PIPE								
COMMON				SINGLE PIPE		DOUBLE PIPE		
D	H	B	G	L	YD³	M	L	YD³
15"	3'-4"	1'-8"	2'-6"	5'-0"	0.7	1'-11"	6'-11"	1.0
18"	3'-7"	1'-10"	2'-11"	5'-10"	1.0	2'-3"	8'-1"	1.2
24"	4'-1"	2'-1"	3'-8"	7'-4"	1.4	3'-0"	10'-4"	1.9
30"	4'-7"	2'-4"	4'-5"	8'-10"	2.0	3'-9"	12'-7"	2.7
36"	5'-1"	2'-7"	5'-2"	10'-4"	2.8	4'-6"	14'-10"	3.8
42"	5'-7"	2'-10"	5'-11"	11'-10"	3.8	5'-3"	17'-1"	5.0
48"	6'-1"	3'-1"	6'-8"	13'-4"	4.9	6'-0"	19'-4"	7.5

*SEE SHEET 3

STATE OF NORTH CAROLINA DEPT. OF TRANSPORTATION DIVISION OF HIGHWAYS RALEIGH, N.C. 7-06 ENGLISH STANDARD DRAWING FOR CONCRETE ENDWALL FOR SINGLE AND DOUBLE PIPE CULVERTS 15" THRU 48" PIPE - 90° SKEW SHEET 2 OF 3 838.01

STATE OF NORTH CAROLINA DEPT. OF TRANSPORTATION DIVISION OF HIGHWAYS RALEIGH, N.C. — 7-06

ENGLISH STANDARD DRAWING FOR CONCRETE ENDWALL FOR SINGLE AND DOUBLE PIPE CULVERTS
15" THRU 48" PIPE - 90° SKEW

SHEET 3 OF 3 — 838.01

GENERAL NOTES:

CHAMFER ALL CORNERS 1" OR HAVE A RADIUS OF 1".

PLACE 2 #6 "Y" BARS IN THE TOP OF ALL ENDWALL FOR PIPE CULVERTS 42" AND OVER WITH A MINIMUM OF 3" COVER AND A LENGTH OF 6" LESS THAN ENDWALL LENGTH.

CONSTRUCT BOTTOM SLAB WITH FORMS.

DO NOT INTERPRET WALL THICKNESS (T) SHOWN FOR THE THICKNESS ACCEPTABLE, BUT IS USED IN COMPUTING ENDWALL QUANTITIES.

WHEN THE CONTRACTOR ELECTS TO USE A CONSTRUCTION JOINT AT THE BOTTOM OF THE PIPE, PLACE BAR "X" DOWELS IN THE BASE AS SHOWN ON PLANS. SPACE BARS APPROXIMATELY ON 12" CENTERS UNLESS OTHERWISE DIRECTED BY THE ENGINEER.

WHEN THE CONTRACTOR ELECTS TO USE A CONSTRUCTION JOINT AT THE BOTTOM OF THE PIPE AND POUR THE BASE SEPARATELY LEAVE THE POUR ROUGH.

USE CLASS "B" CONCRETE.

STATE OF NORTH CAROLINA DEPT. OF TRANSPORTATION DIVISION OF HIGHWAYS RALEIGH, N.C. 7-06 ENGLISH STANDARD DRAWING FOR CONCRETE ENDWALL FOR SINGLE AND DOUBLE PIPE CULVERTS 15" THRU 48" PIPE - 90° SKEW SHEET 3 OF 3 838.01

STATE OF NORTH CAROLINA DEPT. OF TRANSPORTATION DIVISION OF HIGHWAYS RALEIGH, N.C. — 7-06

ENGLISH STANDARD DRAWING FOR CONCRETE "L" ENDWALL FOR SINGLE PIPE CULVERTS
15" THRU 48" PIPE

SHEET 1 OF 1 — 838.05

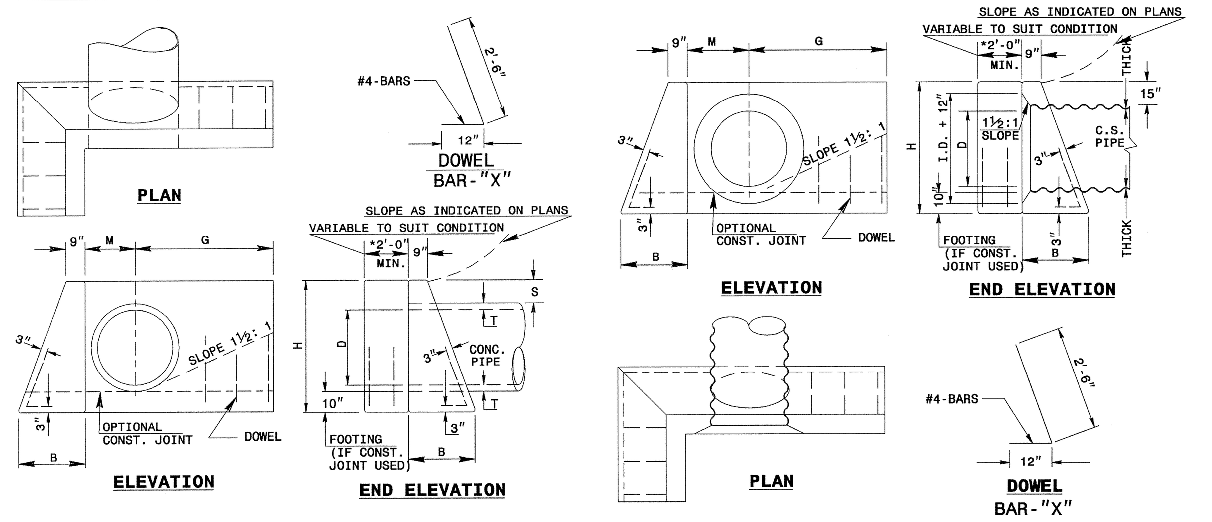

GENERAL NOTES:
- CHAMFER ALL CORNERS 1". USE CLASS "B" CONCRETE.
- PLACE 2 #6 "Y" BARS IN THE TOP OF ALL ENDWALL FOR PIPE CULVERTS 42" AND OVER WITH A MINIMUM OF 3" COVER AND A LENGTH OF 6" LESS THAN ENDWALL LENGTH.
- CONSTRUCT BOTTOM SLAB WITH FORMS.
- WHEN THE CONTRACTOR ELECTS TO USE A CONSTRUCTION JOINT AT THE BOTTOM OF THE PIPE, PLACE BAR "X" DOWELS IN THE BASE AS SHOWN ON PLANS. SPACE BARS APPROXIMATELY ON 12" CENTERS UNLESS OTHERWISE DIRECTED BY THE ENGINEER.
- WHEN THE CONTRACTOR ELECTS TO USE A CONSTRUCTION JOINT AT THE BOTTOM OF THE PIPE AND POUR THE BASE SEPARATELY LEAVE THE POUR ROUGH.
- DO NOT INTERPRET WALL THICKNESS (T) SHOWN FOR THE THICKNESS ACCEPTABLE, BUT IS USED IN COMPUTING ENDWALL QUANTITIES.

REINFORCING QUANTITIES													
DIA.	15"	18"	24"	30"	36"	42" C.S.		42" R.C.		48" C.S.		48" R.C.	
BARS	"X"	"X"	"X"	"X"	"X"	"X"	"Y"	"X"	"Y"	"X"	"Y"	"X"	"Y"
QTY.	5	5	6	6	7	7	2	7	2	8	2	8	2
LBS.	12	12	14	14	16	47		49		52		55	

*QUANTITIES BASED ON 2'-0"

DIMENSIONS AND CONCRETE QUANTITIES												
	R.C.P. DIMENSIONS AND VOLUMES							C.S.P. DIMENSIONS AND VOLUMES				
D	H	B	G	M	S	T	YD³	H	B	G	M	YD³
15"	3'-4"	1'-8"	2'-6"	1'-1"	10½"	2¼"	1.0	3'-4"	1'-8"	2'-5"	1'-5"	1.0
18"	3'-7"	1'-10"	2'-11"	1'-3"	10"	2½"	1.2	3'-7"	1'-10"	2'-9"	1'-6"	1.3
24"	4'-2"	2'-1"	3'-9"	1'-6"	10"	3"	1.7	4'-1"	2'-1"	3'-6"	1'-9"	1.8
30"	4'-9"	2'-5"	4'-8"	1'-10"	10"	3½"	2.5	4'-7"	2'-4"	4'-3"	2'-0"	2.4
36"	5'-5"	2'-9"	5'-8"	2'-2"	9½"	4¾"	3.6	5'-1"	2'-7"	5'-0"	2'-3"	3.1
42"	6'-0"	3'-0"	6'-7"	2'-5"	9½"	5¼"	4.6	5'-7"	2'-10"	5'-9"	2'-6"	4.0
48"	6'-7"	3'-4"	7'-5"	2'-9"	9½"	5¾"	6.0	6'-1"	3'-1"	6'-6"	2'-9"	5.1

STATE OF NORTH CAROLINA DEPT. OF TRANSPORTATION DIVISION OF HIGHWAYS RALEIGH, N.C. 7-06 ENGLISH STANDARD DRAWING FOR CONCRETE "L" ENDWALL FOR SINGLE PIPE CULVERTS 15" THRU 48" PIPE SHEET 1 OF 1 838.05

STATE OF NORTH CAROLINA DEPT. OF TRANSPORTATION DIVISION OF HIGHWAYS RALEIGH, N.C. — 7-06

ENGLISH STANDARD DRAWING FOR CONCRETE GRATED DROP INLET TYPE 'D'
12" THRU 36" PIPE

SHEET 1 OF 1 — 840.19

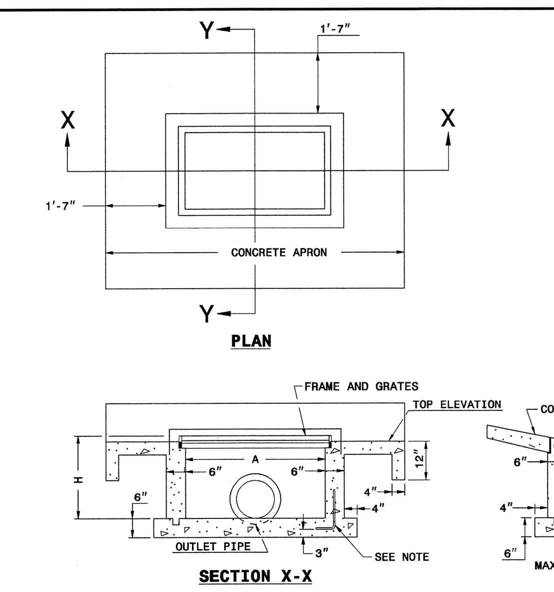

GENERAL NOTES:

USE CLASS "B" CONCRETE THROUGHOUT.

PROVIDE ALL DROP INLETS OVER 3'-6" IN DEPTH WITH STEPS 12" ON CENTER. USE STEPS WHICH COMPLY WITH STD. DRAWING 840.66.

OPTIONAL CONSTRUCTION - MONOLITHIC POUR, 2" KEYWAY, OR #4 BAR DOWELS AT 12" CENTERS AS DIRECTED BY THE ENGINEER.

USE FORMS FOR THE CONSTRUCTION OF THE BOTTOM SLAB.

IF REINFORCED CONCRETE PIPE IS SET IN BOTTOM SLAB OF BOX, ADD TO SLAB AS SHOWN ON STD. NO. 840.00.

CONSTRUCT WITH PIPE CROWNS MATCHING.

MAX. DEPTH OF THIS STRUCTURE FROM TOP OF BOTTOM SLAB TO TOP ELEVATION IS 12 FEET.

USE STANDARD FRAMES AND GRATES 840.22 (SHOWN), 840.24(SHOWN), 840.20, 840.29, AND 840.33.

SEE STANDARD DRAWING 840.25 FOR ATTACHMENT OF FRAMES AND GRATES NOT SHOWN.

CHAMFER ALL EXPOSED CORNERS 1".

DRAWING NOT TO SCALE.

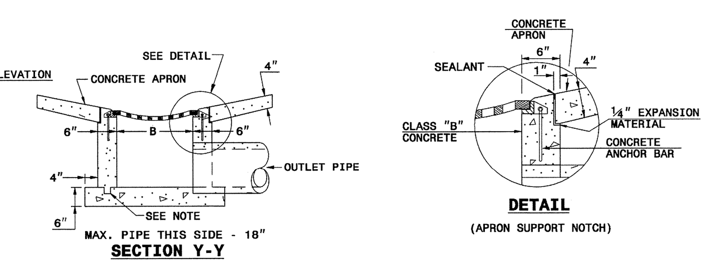

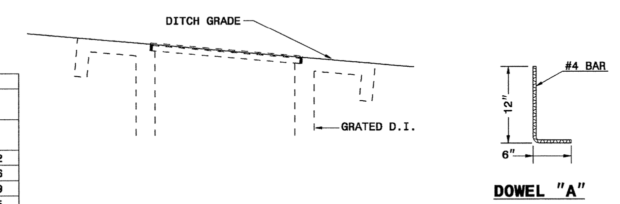

MINIMUM DIMENSIONS AND QUANTITIES FOR CONCRETE GRATED DROP INLET									
PIPE	SPAN	WIDTH	HEIGHT	CUBIC YARDS OF CONCRETE IN BOX				DEDUCTIONS FOR ONE PIPE	
D	A	B	H	BOTTOM SLAB	H PER FT. HT.	H MIN. TOTAL	TOTAL	C.S.	R.C.
12"	3'-8"	2'-0"	1'-8"	0.362	0.247	0.391	0.753	0.020	0.032
15"	3'-8"	2'-0"	1'-11"	0.362	0.247	0.453	0.815	0.023	0.036
18"	3'-8"	2'-0"	2'-2"	0.362	0.247	0.515	0.877	0.033	0.049
24"	3'-8"	2'-0"	2'-8"	0.362	0.247	0.659	1.021	0.059	0.085
30"	3'-8"	2'-0"	3'-2"	0.362	0.247	0.782	1.144	0.092	0.127
36"	3'-8"	2'-0"	3'-8"	0.362	0.247	0.906	1.268	0.132	0.178

STATE OF NORTH CAROLINA DEPT. OF TRANSPORTATION DIVISION OF HIGHWAYS RALEIGH, N.C. 7-06 ENGLISH STANDARD DRAWING FOR CONCRETE GRATED DROP INLET TYPE 'D' 12" THRU 36" PIPE SHEET 1 OF 1 840.19

STATE OF NORTH CAROLINA DEPT. OF TRANSPORTATION DIVISION OF HIGHWAYS RALEIGH, N.C. — 7-06

ENGLISH STANDARD DRAWING FOR FRAMES AND WIDE SLOT FLAT GRATES

SHEET 1 OF 1 — 840.20

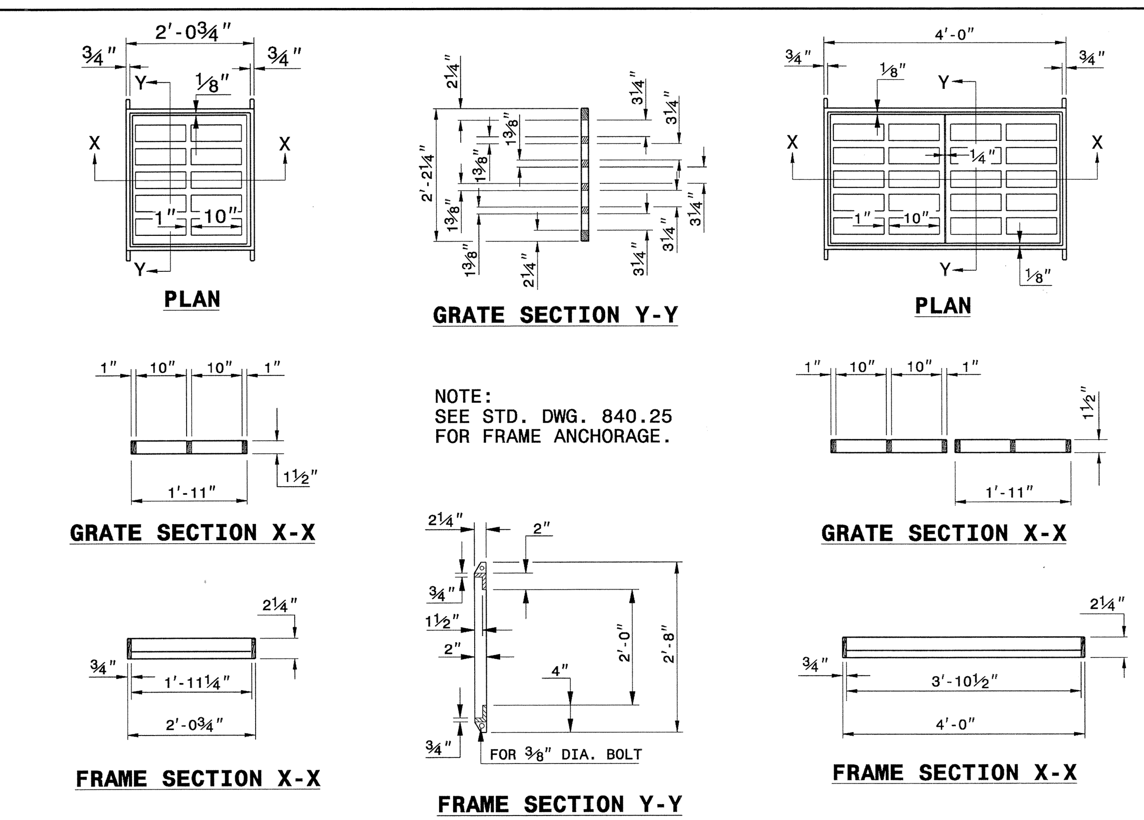

NOTE:
SEE STD. DWG. 840.25
FOR FRAME ANCHORAGE.

STATE OF NORTH CAROLINA DEPT. OF TRANSPORTATION DIVISION OF HIGHWAYS RALEIGH, N.C. 7-06 ENGLISH STANDARD DRAWING FOR FRAMES AND WIDE SLOT FLAT GRATES SHEET 1 OF 1 840.20

STATE OF NORTH CAROLINA DEPT. OF TRANSPORTATION DIVISION OF HIGHWAYS RALEIGH, N.C. — 7-06

ENGLISH STANDARD DRAWING FOR FRAMES AND WIDE SLOT SAG GRATES

SHEET 1 OF 1 — 840.22

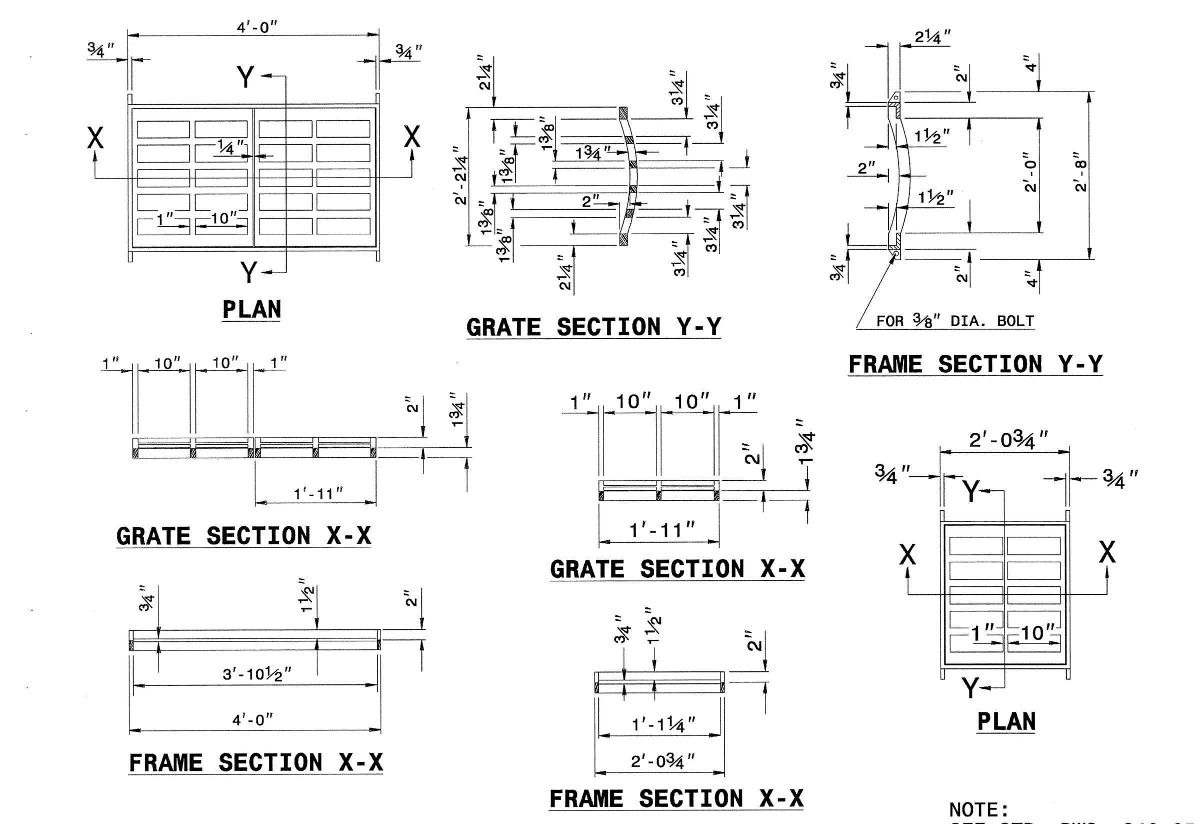

NOTE:
SEE STD. DWG. 840.25
FOR FRAME ANCHORAGE.

STATE OF NORTH CAROLINA DEPT. OF TRANSPORTATION DIVISION OF HIGHWAYS RALEIGH, N.C. 7-06 ENGLISH STANDARD DRAWING FOR FRAMES AND WIDE SLOT SAG GRATES SHEET 1 OF 1 840.22

STATE OF NORTH CAROLINA DEPT. OF TRANSPORTATION DIVISION OF HIGHWAYS RALEIGH, N.C. — 7-06

ENGLISH STANDARD DRAWING FOR BRICK GRATED DROP INLET TYPE 'A'
12" THRU 72" PIPE

SHEET 1 OF 2 — 840.26

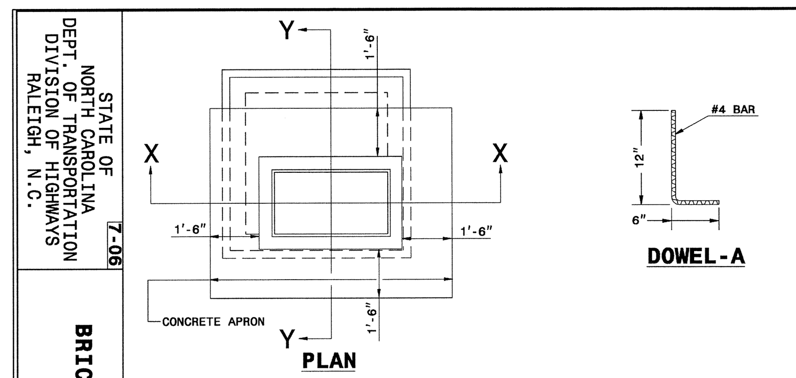

GENERAL NOTES:

USE CLASS "B" CONCRETE THROUGHOUT.

JUMBO BRICK WILL BE PERMITTED. CONCRETE BRICK OR 4" SOLID CONCRETE BLOCKS MAY BE USED IN LIEU OF CLAY BRICKS.

PROVIDE ALL DROP INLETS OVER 3'-6" IN DEPTH WITH STEPS 12" ON CENTER. USE STEPS WHICH COMPLY WITH STD. DRAWING 840.66.

USE #4 BAR DOWELS AT 12" CENTERS.

USE FORMS FOR THE CONSTRUCTION OF THE BOTTOM SLAB.

IF REINFORCED CONCRETE PIPE IS SET IN BOTTOM SLAB OF BOX, ADD TO SLAB AS SHOWN ON STD. NO. 840.00.

CONSTRUCT WITH PIPE CROWNS MATCHING.

MAX. DEPTH OF THIS STRUCTURE FROM TOP OF BOTTOM SLAB TO TOP ELEVATION IS 12 FEET.

USE STANDARD FRAMES AND GRATES 840.22 (SHOWN), 840.24(SHOWN), 840.20, 840.29, AND 840.33.

SEE STANDARD DRAWING 840.25 FOR ATTACHMENT OF FRAMES AND GRATES NOT SHOWN.

CHAMFER ALL EXPOSED CORNERS 1".

DRAWING NOT TO SCALE.

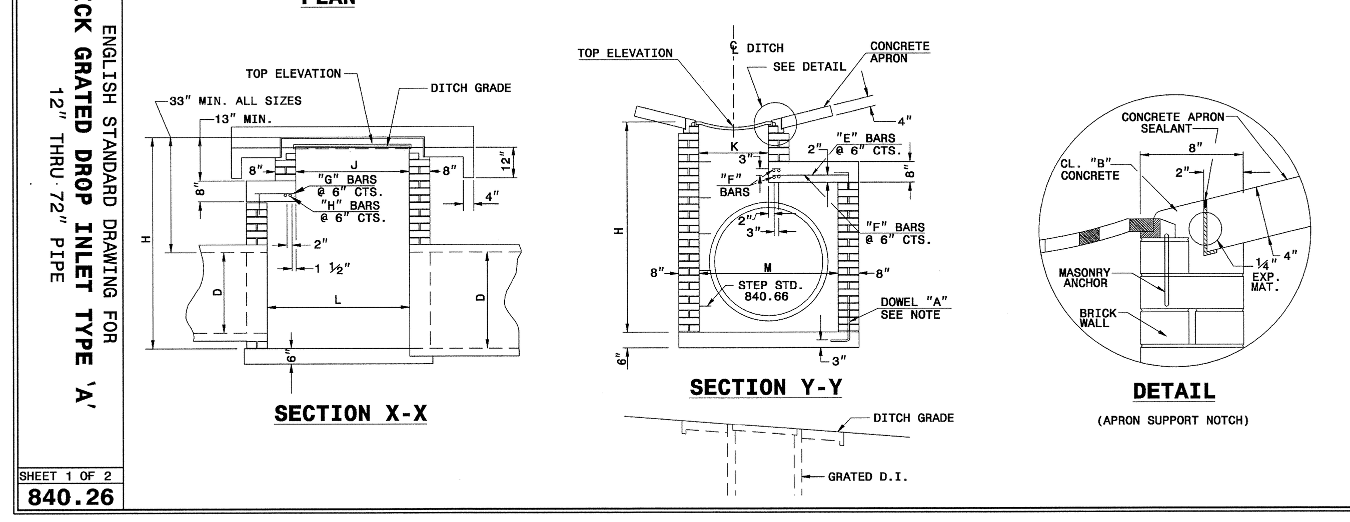

STATE OF NORTH CAROLINA DEPT. OF TRANSPORTATION DIVISION OF HIGHWAYS RALEIGH, N.C. 7-06 ENGLISH STANDARD DRAWING FOR BRICK GRATED DROP INLET TYPE 'A' 12" THRU 72" PIPE SHEET 1 OF 2 840.26

STATE OF NORTH CAROLINA DEPT. OF TRANSPORTATION DIVISION OF HIGHWAYS RALEIGH, N.C. — 7-06

ENGLISH STANDARD DRAWING FOR BRICK GRATED DROP INLET TYPE 'A'
12" THRU 72" PIPE

SHEET 2 OF 2 — 840.26

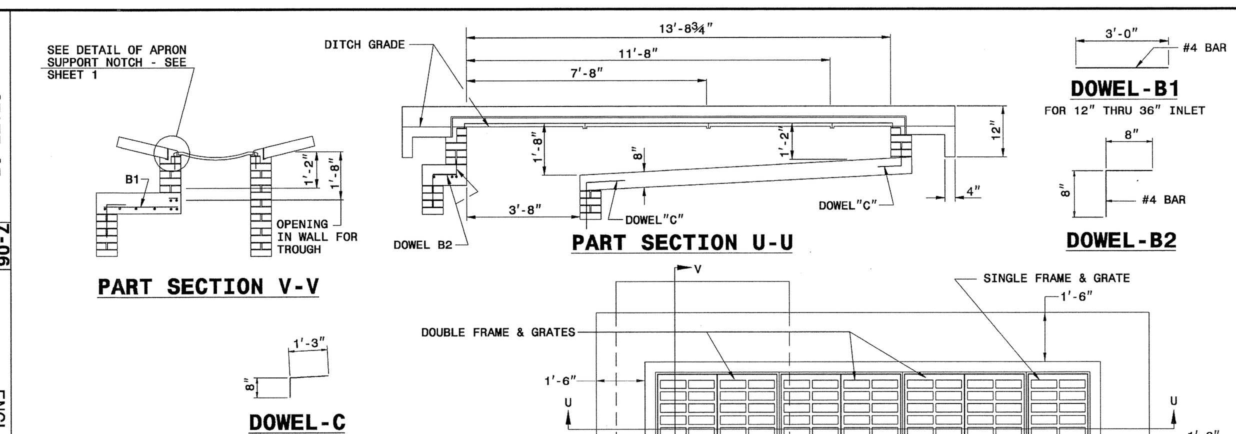

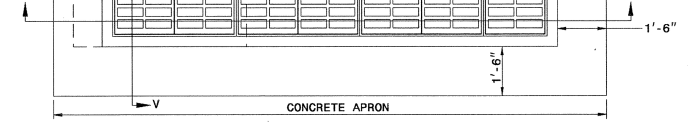

QUANTITY TO BE ADDED FOR EACH 2' INCREMENT INLET OPENING						
ADDITIONAL INLETS	2'-0"	4'-0"	6'-0"	8'-0"	10'-0"	12'-0"
CONCRETE CU. YDS.	0.191	0.417	0.665	0.897	1.145	1.380
CONCRETE APRON CU. YDS.	0.065	0.132	0.198	0.263	0.329	0.395

DIMENSIONS AND QUANTITIES FOR BRICK GRATED DROP INLET (BASED ON MIN. HEIGHT, H)

PIPE D	SPAN J	WIDTH K	SPAN L	WIDTH M	HEIGHT H	BARS E NO.	BARS E LENGTH	BARS F NO.	BARS F LENGTH	BARS G NO.	BARS G LENGTH	BARS H NO.	BARS H LENGTH	TOTAL LBS.	CU.YDS. CONC. IN BOX TOP SLAB	BOTTOM SLAB	APRON	TOTAL	CU.YDS. BRICK MASONRY IN BOX H TOTAL	H PER FT HT	BRICK AND CONC. TOTAL	DEDUCTIONS FOR ONE PIPE C.S.	R.C.
12"	3'-8"	2'-0"	3'-8"	2'-0"	3'-9"	—	—	—	—	—	—	—	—	—	—	0.308	0.351	0.659	1.301	0.346 ABOVE MIN H	1.960	0.020	0.032
15"	3'-8"	2'-0"	3'-8"	2'-0"	4'-0"	—	—	—	—	—	—	—	—	—	—	0.308	0.351	0.659	1.407		2.066	0.031	0.047
18"				2'-0"	4'-3"	—	—	—	—	—	—	—	—	—	—	0.308		0.659	1.471		2.130	0.044	0.065
24"				2'-10"	4'-9"	8	1'-3"	6	4'-9"	—	—	—	—	26	0.185	0.386		0.922	1.646	0.346	2.568	0.078	0.113
30"			3'-8"	3'-5"	5'-3"	8	1'-10"	7	4'-9"	—	—	—	—	32	0.301	0.410		1.062	1.936		2.998	0.122	0.170
36"			3'-10"	3'-10"	5'-9"	8	2'-3"	8	4'-10"	4	0'-7"	2	4'-11"	46	0.374	0.494		1.219	2.187		3.406	0.176	0.238
42"			4'-6"	4'-6"	6'-3"	10	2'-11"	9	5'-7"		1'-3"	3	5'-7"	68	0.555	0.630		1.536	2.717		4.253	0.240	0.323
48"			5'-0"	5'-0"	6'-9"	11	3'-5"	10	6'-1"		1'-9"	4	6'-1"	87	0.705	0.743		1.799	3.221	H	5.020	0.313	0.422
54"			5'-6"	5'-6"	7'-3"	12	3'-11"	11	6'-7"		2'-3"	5	6'-7"	108	0.868	0.865		2.084	3.786		5.870	0.396	0.535
60"			6'-2"	6'-2"	7'-9"	13	4'-7"	12	7'-3"		2'-11"	6	7'-3"	135	1.104	1.042		2.497	4.701		7.198	0.489	0.660
66"			6'-9"	6'-9"	8'-3"	14	5'-2"	14	7'-10"		3'-6"	7	7'-10"	168	1.328	1.210		2.889	5.189		8.078	0.591	0.798
72"	3'-8"	2'-0"	7'-4"	7'-4"	8'-9"	15	5'-9"	15	8'-5"	4	4'-1"	8	8'-5"	198	1.569	1.391	0.351	3.311	5.954	0.346	8.905	0.704	0.950

STATE OF NORTH CAROLINA DEPT. OF TRANSPORTATION DIVISION OF HIGHWAYS RALEIGH, N.C. 7-06 ENGLISH STANDARD DRAWING FOR BRICK GRATED DROP INLET TYPE 'A' 12" THRU 72" PIPE SHEET 2 OF 2 840.26

ISSUED FOR PERMITTING
NOT FOR CONSTRUCTION

REV.NO.	DESCRIPTIONS	DATE
F	WATERLINE AND CROSS SECTION REVISIONS	09/08/09
E	REVISED PER NCDOT HYDRAULIC COMMENTS DATED 07/15/08	07/29/08
D	REVISION 2 PLAN SET RELEASE	07/09/08
C	REVISED PER NCDOT COMMENT	12/20/07

REVISIONS

SEAL

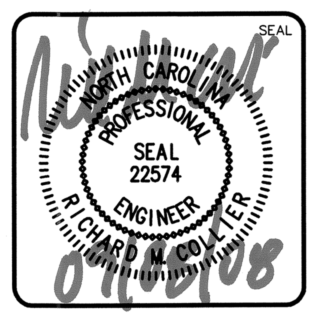

MCKIM&CREED
243 North Front Street
Wilmington, North Carolina 28401
Phone: (910)343-1048 , Fax: (910)251-8282
AA0002667 EB0006691
www.mckimcreed.com

Newland® COMMUNITIES
AT THE HEART OF GREAT LIVING

RIVER ROAD

NCDOT ROADWAY DETAILS

DATE:	JUNE 2007
MCE PROJ. #	02735-0007
DRAWN	BCE
DESIGNED	BCE
CHECKED	RMC
PROJ. MGR.	RMC

SCALE
HORIZONTAL: NA
VERTICAL: NA

M&C FILE NUMBER CT-503
DRAWING NUMBER 22

STATUS: FINAL DESIGN PLANS — REVISION F

S:\2735\0007\80-Drawings\CT503-27350007.dwg, 9/9/2008 4:04:01 PM, Xerox 6204 Wide Format with FreeFlow Accxes.pc3

STATE OF NORTH CAROLINA
DEPT. OF TRANSPORTATION
DIVISION OF HIGHWAYS
RALEIGH, N.C.

7-06

ENGLISH STANDARD DRAWING FOR

CONCRETE GRATED DROP INLET TYPE 'A'

12" THRU 72" PIPE

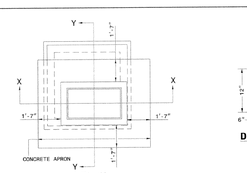

PLAN

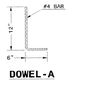

DOWEL-A

GENERAL NOTES:

USE CLASS "B" CONCRETE THROUGHOUT.

PROVIDE ALL GRATED DROP INLETS OVER 3'-6" IN DEPTH WITH STEPS 12" ON CENTER. USE STEPS WHICH COMPLY WITH STD. DRAWING 840.66.

OPTIONAL CONSTRUCTION : MONOLITHIC POUR, 2" KEYWAY, OR #4 BAR DOWELS AT 12" CENTERS AS DIRECTED BY THE ENGINEER.

USE FORMS FOR THE CONSTRUCTION OF THE BOTTOM SLAB.

IF REINFORCED CONCRETE PIPE IS SET IN BOTTOM SLAB OF BOX, ADD TO SLAB AS SHOWN ON STD. NO. 840.00.

CONSTRUCT WITH PIPE CHORDS MATCHING.

USE STANDARD FRAMES AND GRATES 840.22 (SHOWN), 840.24(SHOWN), 840.20 (NOT SHOWN) OR 840.29 (NOT SHOWN).

SEE STANDARD DRAWING 840.25 FOR ATTACHMENT OF FRAMES AND GRATES.

CHAMFER ALL EXPOSED CORNERS 1".

DRAWING NOT TO SCALE.

MAX. DEPTH OF THIS STRUCTURE FROM TOP OF BOTTOM SLAB TO TOP ELEVATION IS 12 FEET.

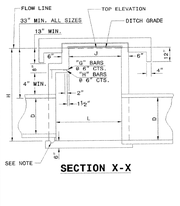

SECTION X-X

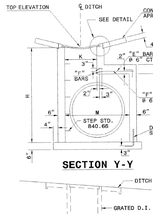

SECTION Y-Y

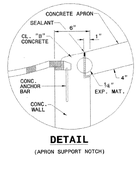

DETAIL

(APRON SUPPORT NOTCH)

SHEET 1 OF 2

840.17

STATE OF NORTH CAROLINA
DEPT. OF TRANSPORTATION
DIVISION OF HIGHWAYS
RALEIGH, N.C.

7-06

ENGLISH STANDARD DRAWING FOR

CONCRETE GRATED DROP INLET TYPE 'A'

12" THRU 72" PIPE

SEE DETAIL OF APRON SUPPORT NOTCH - SEE STD. 840.17 SHEET 1

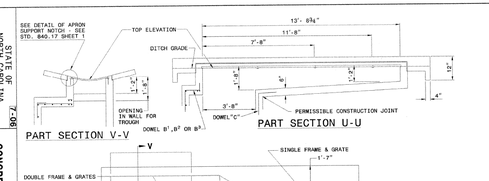

PART SECTION V-V

DOWEL B¹,B² OR B³.

PART SECTION U-U

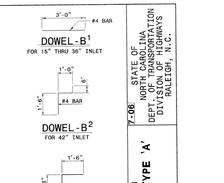

DOWEL-B¹

FOR 18" THRU 36" INLET

DOWEL-B²

FOR 42" INLET

DOWEL-B³

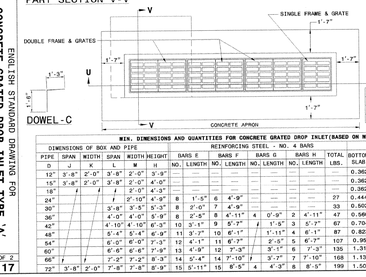

DOWEL-C

QUANTITY TO BE ADDED FOR EACH 2' INCREMENT INLET OPENING					
ADDITIONAL INLETS	2'-0"	4'-0"	6'-0"	8'-0"	10'-0" 12'-0"
CONCRETE CU. YDS.	0.191	0.417	0.665	0.897	1.145 1.380
CONCRETE APRON CU. YDS.	0.074	0.148	0.222	0.296	0.370 0.444

MIN. DIMENSIONS AND QUANTITIES FOR CONCRETE GRATED DROP INLET(BASED ON MIN. HEIGHT, H)

DIMENSIONS OF BOX AND PIPE							REINFORCING STEEL - NO. 4 BARS										CU YDS CONC. IN BOX				DEDUCTIONS FOR ONE PIPE	
PIPE	SPAN	WIDTH	SPAN	WIDTH	HEIGHT		BARS E		BARS F		BARS G		BARS H		TOTAL		BOTTOM	H	H PER	APRON	TOTAL	
D	J	K	L	M	G		NO.	LENGTH	NO.	LENGTH	NO.	LENGTH	NO.	LENGTH	LBS.		SLAB	TOTAL	FT HT			C.S.	R.C.
12"	3'-8"	2'-0"	3'-8"	2'-0"	3'-9"		—	—	—	—	—	—	—	—	—		0.362	0.908	0.247	0.395	1.683	0.015	0.024
15"	3'-8"	2'-0"	3'-8"	2'-0"	4'-0"		—	—	—	—	—	—	—	—	—		0.362	0.988	0.247	0.395	1.745	0.023	0.036
18"				2'-0"	4'-3"		—	—	—	—	—	—	—	—	—		0.362	1.050	0.247		1.807	0.033	0.049
24"				2'-10"	4'-9"	8	1'-5"	6	4'-9"	—	—	—	—	—	27		0.444	1.362	0.278		2.201	0.059	0.085
30"			3'-8"	3'-5"	5'-3"	8	2'-0"	7	4'-9"	—	—	—	—	—	33		0.502	1.644	0.288		2.541	0.092	0.127
36"			4'-0"	4'-0"	5'-9"	8	2'-5"	8	4'-11"	4	0'-9"	2	4'-11"	47	0.560	1.931	0.321		2.920	0.132	0.178
42"			4'-10"	4'-10"	6'-3"	10	3'-1"	9	5'-7"		1'-3"	3	5'-7"	67	0.704	2.500	0.370		3.677	0.180	0.243
48"			5'-4"	5'-4"	6'-9"	11	3'-7"	10	6'-1"		1'-11"	4	6'-1"	87	0.823	3.013	0.407		4.315	0.235	0.317
54"			6'-0"	6'-0"	7'-3"	12	4'-1"	11	6'-7"		2'-5"	5	6'-7"	107	0.951	3.589	0.444		5.072	0.297	0.401
60"			6'-6"	6'-6"	7'-9"	13	4'-9"	12	7'-3"		3'-1"	6	7'-3"	135	1.311	4.339	0.494		6.170	0.367	0.495
66"			7'-2"	7'-2"	8'-3"	14	5'-4"	14	7'-10"		3'-7"	7	7'-10"	168	1.136	5.061	0.537		6.901	0.444	0.599
72"	3'-8"	2'-0"	7'-8"	7'-8"	8'-9"	15	5'-11"	15	8'-5"	4	4'-3"	8	8'-5"	199	1.500	5.660	0.580	0.395	7.868	0.528	0.713

SHEET 2 OF 2

840.17

STATE OF NORTH CAROLINA
DEPT. OF TRANSPORTATION
DIVISION OF HIGHWAYS
RALEIGH, N.C.

7-06

ENGLISH STANDARD DRAWING FOR

CONCRETE GRATED DROP INLET TYPE 'A'

12" THRU 72" PIPE

SHEET 1 OF 1

840.18

STATE OF NORTH CAROLINA
DEPT. OF TRANSPORTATION
DIVISION OF HIGHWAYS
RALEIGH, N.C.

7-06

ENGLISH STANDARD DRAWING FOR

CONCRETE GRATED DROP INLET TYPE 'B'

12" THRU 36" PIPE

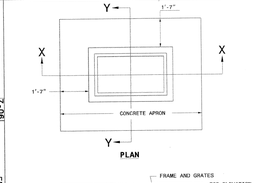

PLAN

GENERAL NOTES:

USE CLASS "B" CONCRETE THROUGHOUT.

PROVIDE ALL GRATED DROP INLETS OVER 3'-6" IN DEPTH WITH STEPS 12" ON CENTER. USE STEPS WHICH COMPLY WITH STD. DRAWING 840.66.

OPTIONAL CONSTRUCTION : MONOLITHIC POUR, 2" KEYWAY, OR #4 BAR DOWELS AT 12" CENTERS AS DIRECTED BY THE ENGINEER.

USE FORMS FOR THE CONSTRUCTION OF THE BOTTOM SLAB.

IF REINFORCED CONCRETE PIPE IS SET IN BOTTOM SLAB OF BOX, ADD TO SLAB AS SHOWN ON STD. NO. 840.00.

CONSTRUCT WITH PIPE CHORDS MATCHING.

MAX. DEPTH OF THIS STRUCTURE FROM TOP OF BOTTOM SLAB TO TOP ELEVATION IS 12 FEET.

USE STANDARD FRAMES AND GRATES 840.22 (SHOWN), 840.24(SHOWN), 840.20, 840.29, AND 840.33.

SEE STANDARD DRAWING 840.25 FOR ATTACHMENT OF FRAMES AND GRATES NOT SHOWN.

CHAMFER ALL EXPOSED CORNERS 1".

DRAWING NOT TO SCALE.

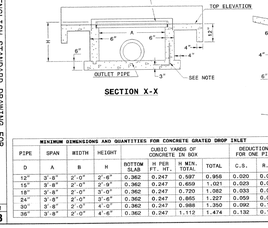

SECTION X-X

SECTION Y-Y

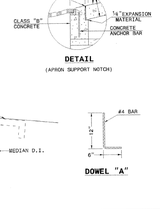

DETAIL

(APRON SUPPORT NOTCH)

DOWEL "A"

MINIMUM DIMENSIONS AND QUANTITIES FOR CONCRETE GRATED DROP INLET									
PIPE	SPAN	WIDTH	HEIGHT	CUBIC YARDS OF CONCRETE IN BOX			DEDUCTIONS FOR ONE PIPE		
D	A	B	H	BOTTOM SLAB	H PER FT. HT.	H MIN. TOTAL	TOTAL	C.S.	R.C.
12"	3'-8"	2'-0"	2'-6"	0.362	0.247	0.597	0.956	0.020	0.032
15"	3'-8"	2'-0"	2'-9"	0.362	0.247	0.659	1.021	0.023	0.036
18"	3'-8"	2'-0"	3'-0"	0.362	0.247	0.720	1.082	0.033	0.049
24"	3'-8"	2'-0"	3'-6"	0.362	0.247	0.865	1.227	0.059	0.085
30"	3'-8"	2'-0"	4'-0"	0.362	0.247	0.988	1.350	0.092	0.127
36"	3'-8"	2'-0"	4'-6"	0.362	0.247	1.112	1.474	0.132	0.178

SHEET 1 OF 1

840.18

STATE OF NORTH CAROLINA
DEPT. OF TRANSPORTATION
DIVISION OF HIGHWAYS
RALEIGH, N.C.

7-06

ENGLISH STANDARD DRAWING FOR

CONCRETE GRATED DROP INLET TYPE 'B'

12" THRU 96" PIPE

ISSUED FOR PERMITTING
NOT FOR CONSTRUCTION

REV.NO.	DESCRIPTIONS	DATE
F	REVISED WATERLINE AND CROSS SECTIONS	09/08/08
E	REVISED PER NCDOT HYDRAULICS COMMENTS 07/15/08	07/28/08
D	REVISION 2 PLAN SET RELEASE	07/09/08
C	REVISED PER NCDOT COMMENT	12/20/07

REVISIONS

SEAL

SEAL

NORTH CAROLINA PROFESSIONAL SEAL 22574 ENGINEER RICHARD M. CHANDLER

01/06/08

McKIM & CREED
243 North Front Street
Wilmington, North Carolina 28401
Phone: (910)343-1048 , Fax: (910)251-8282
AA0002667 EB0006691
www.mckimcreed.com

Newland® COMMUNITIES
AT THE HEART OF GREAT LIVING

RIVER ROAD

NCDOT ROADWAY DETAILS

DATE:	JUNE 2007
MCE PROJ. #	02735-0007
DRAWN	BCE
DESIGNED	BCE
CHECKED	RMC
PROJ. MGR.	RMC

SCALE
HORIZONTAL: NA
VERTICAL: NA

M&C FILE NUMBER CT-503A
DRAWING NUMBER 22A

STATUS: FINAL DESIGN PLANS
REVISION F

S:\2735\0007\80-Drawings\CT503A-27350007.dwg, 9/11/2008 8:32:04 AM, kespinoza, 1:1.06835

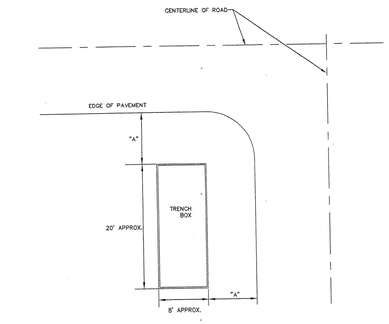

TYPICAL BORE PIT LOCATION

NOT TO SCALE

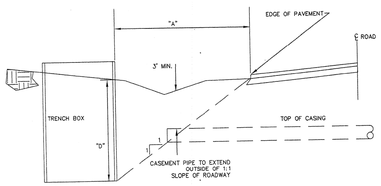

SECTION THRU BORE PIT LOCATION

NOT TO SCALE

LAYOUT SCHEDULE (FT.)									
A	5	6	7	8	9	10	11	12	
D	5	6	7	8	9	10	11	12	

"A" = MINIMUM DISTANCE FROM THE EDGE OF PAVEMENT (EP) IS BASED ON THE DEPTH OF PIT ("D") AND BY A RATIO OF A 1:1 SLOPE. FOLLOW SAFETY REQUIREMENTS BY FENCING OFF OPEN IT AND WORKING AREA.

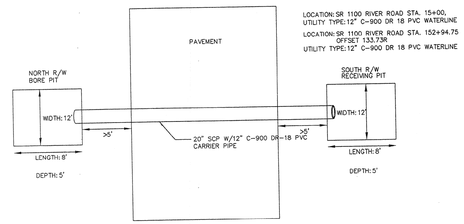

BORE PIT LOCATION STA. 15+00, 152+94.75

NOT TO SCALE

ATTACHMENT NO._____

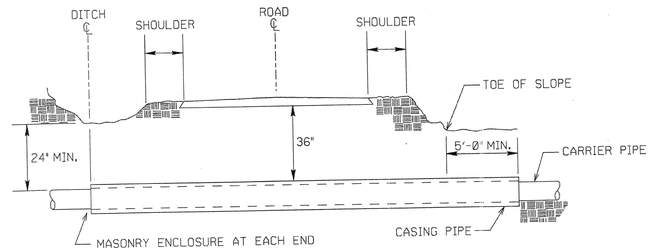

PIPE SIZE (O.D.)	WALL THICKNESS
4" - 12¾"	0.188"
16"	0.250"
18"	0.250"
20"	0.250"
24"	0.250"
30"	0.312"
36"	0.375"
48"	0.500"

ENCASEMENTS SHALL EXTEND FROM DITCH LINE TO DITCH LINE IN CUT SECTIONS, FIVE (5) FEET BEYOND THE TOE OF SLOPES IN FILL SECTIONS, AND TEN (10) FEET BEYOND EDGE OF PAVEMENT IN SECTIONS WITH NO DITCH OR FILL AREA.

DETAIL FOR BORE UNDER STATE ROAD

NCDOT APPROVED NOV.2000 — Not To Scale

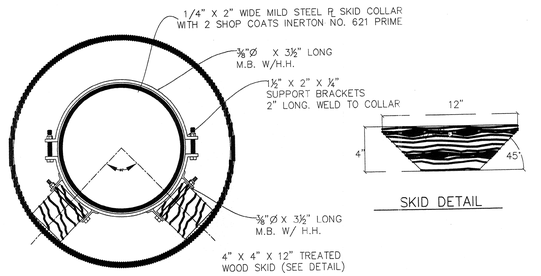

STANDARD CASING PIPE DETAIL – WATER

SD 4-05a

NTS

NOTE: AS OF JULY 1, 2008, NEW HANOVER COUNTY PUBLIC UTILITIES AND CITY OF WILMINGTON UTILITIES HAVE MERGED INTO CAPE FEAR PUBLIC UTILITY AUTHORITY (CFPUA). A REASONABLE ATTEMPT HAS BEEN MADE TO CHANGE ANY REFERENCE TO THE AFOREMENTIONED REGULATORY BODIES. SHOULD A REFERENCE REMAIN, PLEASE DISREGARD AND ADHERE TO CFPUA STANDARDS AND REGULATIONS.

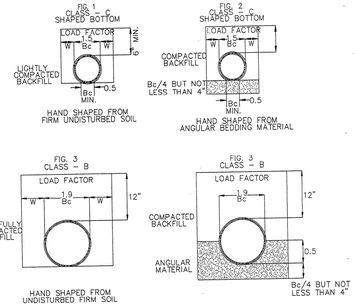

GUIDELINES FOR BEDDING DETAILS, SAN. SEWER CLASSES (B &C)

NOT TO SCALE

REV.NO.	DESCRIPTIONS REVISIONS	DATE
F	REVISED WATER LINE AND CROSS SECTIONS	09/08/08
E	REVISED PER NCDOT HYDRAULIC COMMENTS DATED 07/15/08	07/29/08
D	REVISION 2 PLAN SET RELEASE	06/26/08
	REVISED PER NCDOT ENCROACHMENT COMMENTS	06/13/08
	REVISED PER NHC SEWER COMMENTS	3/28/08
C	REVISED PER NCDOT COMMENTS	12/2007

SEAL

SEAL — RICHARD M. CREED, JR. — PROFESSIONAL ENGINEER — SEAL 22574 — 09/08/08

McKIM&CREED
243 North Front Street
Wilmington, North Carolina 28401
Phone: (910)343-1048 , Fax: (910)251-8282
AA0002667 EB0006691
www.mckimcreed.com

Newland COMMUNITIES
AT THE HEART OF GREAT LIVING

RIVER ROAD

UTILITY DETAILS

DATE:	24 OCT 07
MCE PROJ. #	02735-0007
DRAWN	JPS
DESIGNED	KCBE
CHECKED	KCBE
PROJ. MGR.	RMC

SCALE — HORIZONTAL: NA — VERTICAL: NA

NAC FILE NUMBER: CU-501 — DRAWING NUMBER: 23

STATUS: FINAL DESIGN — REVISION: F

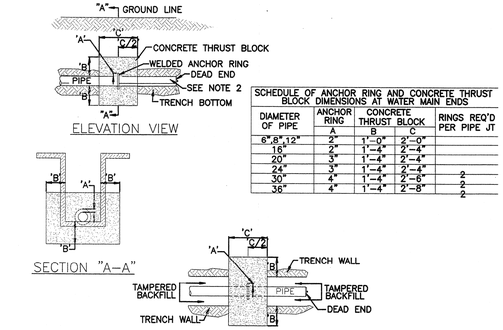

SCHEDULE OF ANCHOR RING AND CONCRETE THRUST BLOCK DIMENSIONS AT WATER MAIN ENDS				
DIAMETER OF PIPE	ANCHOR RING	CONCRETE THRUST BLOCK		RINGS REQ'D PER PIPE JT
	A	B	C	
6",8",12"	2"	1'-0"	2'-0"	
16"	2"	1'-4"	2'-4"	
20"	3"	1'-4"	2'-4"	
24"	3"	1'-4"	2'-4"	
30"	4"	1'-4"	2'-6"	2
36"	4"	1'-4"	2'-8"	2
				2

NOTES:
1. SIZE OF CONCRETE THRUST BLOCK AROUND ANCHOR RINGS TO BE DETERMINED BY TRENCH DIMENSION PLUS EXTENSION 'B' INTO SIDES AND BOTTOM AS SHOWN IN SCHEDULE. CONCRETE INTO SIDES OF DITCH TO BE POURED AGAINST FIRM UNDISTURBED GROUND. FILL AGAINST BLOCKING TO BE COMPACTED TO 90% PROCTOR FOR LENGTH ALONG THE PIPE OF AT LEAST 6'-0".
2. EACH SIDE FOR PIPE WITH ONE ANCHOR, LOCATE ANCHOR 4'-0" FROM DEADEND AS SHOWN FOR PIPE WITH TWO ANCHORS, LOCATE FIRST ANCHOR 3'-0" BACK FROM DEAD END AND LOCATE SECOND ANCHOR 9'-0" FROM FIRST ANCHOR.
3. WHERE THRUST BLOCK OCCURS, THE TRENCH SHOULD BE AT THE MINIMUM WIDTH.
4. CONCRETE SHALL HAVE MINIMUM 28 DAYS COMPRESSIVE STRENGTH OF 3000 PSI.

GUIDELINES FOR THRUST COLLAR INSTALLATION
NOT TO SCALE

NOTE: AS OF JULY 1, 2008, NEW HANOVER COUNTY PUBLIC UTILITIES AND CITY OF WILMINGTON UTILITIES HAVE MERGED INTO CAPE FEAR PUBLIC UTILITY AUTHORITY (CFPUA). A REASONABLE ATTEMPT HAS BEEN MADE TO CHANGE ANY REFERENCE TO THE AFOREMENTIONED REGULATORY BODIES. SHOULD A REFERENCE REMAIN, PLEASE DISREGARD AND ADHERE TO CFPUA STANDARDS AND REGULATIONS

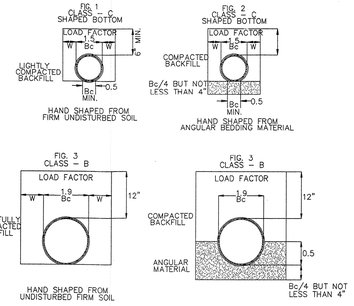

GUIDELINES FOR BEDDING DETAILS, SAN. SEWER CLASSES (B &C)
NOT TO SCALE

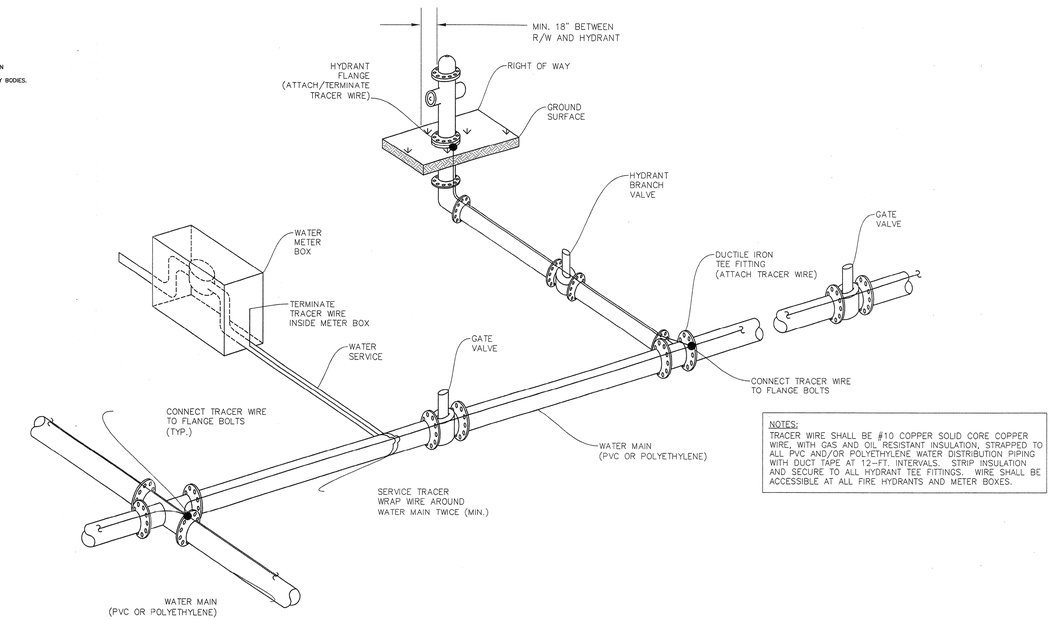

NOTES:
TRACER WIRE SHALL BE #10 COPPER SOLID CORE COPPER WIRE, WITH GAS AND OIL RESISTANT INSULATION, STRAPPED TO ALL PVC AND/OR POLYETHYLENE WATER DISTRIBUTION PIPING WITH DUCT TAPE AT 12'-FT. INTERVALS. STRIP INSULATION AND SECURE TO ALL HYDRANT TEE FITTINGS. WIRE SHALL BE ACCESSIBLE AT ALL FIRE HYDRANTS AND METER BOXES.

TRACER WIRE DETAIL
NTS

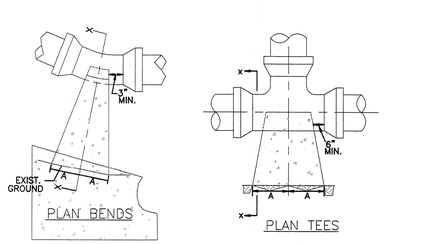

SIZE	90° BENDS		45° BENDS		22 1/2° BENDS		TEES		PLUGS	
	A	B	A	B	A	B	A	B	C	D
6"	16"	10"	9"	10"	6"	8"	10"	12"	10"	21"
8"	22"	13"	12"	13"	8"	10"	13"	16"	12"	29"
10"	26"	17"	14"	17"	10"	13"	16"	20"	14"	36"
12"	29"	21"	16"	21"	11"	16"	18"	24"	16"	41"
14"	35"	24"	19"	24"	12"	20"	22"	27"	18"	48"
16"	38"	27"	21"	27"	12"	24"	24"	30"	20"	54"

NOTE: Based on 1.5 x working pressure of 100 PSI plus AWWA Water Hammer.
All bearing surfaces to be carried to undisturbed ground.

STANDARD THRUST BLOCK FOR WATER MAINS
NOT TO SCALE

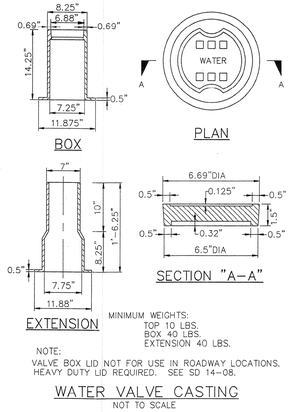

MINIMUM WEIGHTS:
TOP 10 LBS.
BOX 40 LBS.
EXTENSION 40 LBS.

NOTE:
VALVE BOX LID NOT FOR USE IN ROADWAY LOCATIONS.
HEAVY DUTY LID REQUIRED. SEE SD 14-08.

WATER VALVE CASTING
NOT TO SCALE

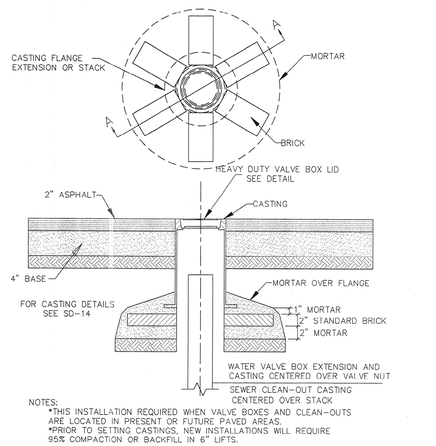

NOTES:
*THIS INSTALLATION REQUIRED WHEN VALVE BOXES AND CLEAN-OUTS ARE LOCATED IN PRESENT OR FUTURE PAVED AREAS.
*PRIOR TO SETTING CASTINGS, NEW INSTALLATIONS WILL REQUIRE 95% COMPACTION OR BACKFILL IN 6" LIFTS.

TYPICAL DETAIL VALVE BOX AND CLEAN-OUT CASTING BASES
NOT TO SCALE

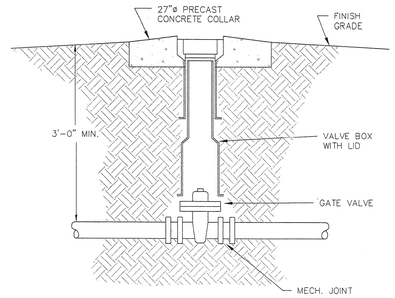

GATE VALVE DETAIL
NOT TO SCALE

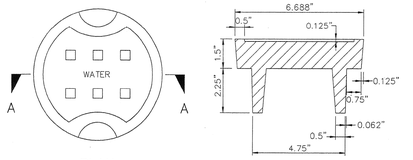

GRE-WVC-6HD, CAST IRON OR EQUAL
APPROX. WEIGHT 17lbs.

HEAVY DUTY VALVE BOX LID
NOT TO SCALE

REV.NO.	DESCRIPTIONS	DATE
	REVISIONS	
F	REVISED WATER LINE AND CROSS SECTIONS	09/08/08
E	REVISED PER NCDOT HYDRAULIC COMMENTS DATED 07/15/08	07/29/08
D	REVISION 2 PLAN SET RELEASE	06/20/08
	REVISED PER NCDOT ENCROACHMENT COMMENTS	06/06/08
	REVISED PER NHC SEWER COMMENTS	3/28/08
F	REVISED PER NCDOT COMMENTS	12/20/07

SEAL

SEAL 22574 ENGINEER RICHARD M. BOLTON NORTH CAROLINA PROFESSIONAL 6/06/08

McKIM&CREED
243 North Front Street
Wilmington, North Carolina 28401
Phone: (910)343-1048 , Fax: (910)251-8282
AA0002667 EB0006691
www.mckimcreed.com

Newland COMMUNITIES
AT THE HEART OF GREAT LIVING

RIVER ROAD

UTILITY DETAILS

DATE:	24 OCT 07
MCE PROJ. #	02735-0007
DRAWN	JPS
DESIGNED	KCBE
CHECKED	KCBE
PROJ. MGR.	RMC

SCALE
HORIZONTAL: NA
VERTICAL: NA

M&C FILE NUMBER CU-502
DRAWING NUMBER 24

STATUS: FINAL DESIGN
REVISION F

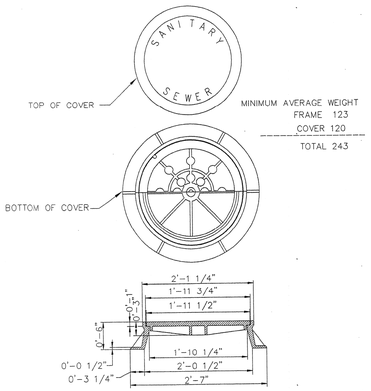

NOTES:
1. SOLID COVER SHOWN, PERFORATED AVAILABLE IF SPECIFIED
2. STANDARD LETTERS UNLESS OTHERWISE SPECIFIED

SANITARY SEWER MANHOLE RING & COVER
NOT TO SCALE

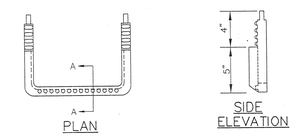

STANDARD SLIP RESISTANT MANHOLE STEP
NOT TO SCALE

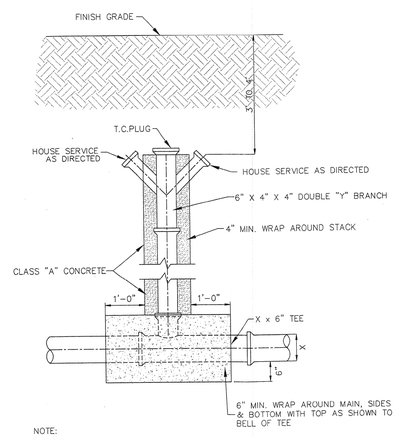

NOTE:
ALL FITTINGS & CONCRETE WRAP SHALL BE INCLUDED IN BID PRICE FOR STACK.

STANDARD STACK DETAIL
NOT TO SCALE

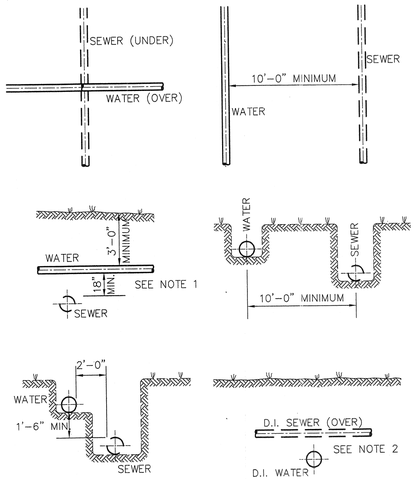

NOTES:
1. WHEN WATER MAIN IS ABOVE SEWER , BUT LESS THAN 18" CLEAR , WATER & SEWER MAINS SHALL BE CONSTRUCTED OF DUCTILE IRON PIPE WITH MECHANICAL JOINT FOR A LATERAL DISTANCE MEASURED AT RIGHT ANGLES TO THE SEWER OF AT LEAST 10 FEET ON EACH SIDE OF SEWER.
2. WHERE WATER IS LAID UNDER SEWER , BOTH WATER AND SEWER PIPE SHALL BE CONSTRUCTED OF DUCTILE IRON PIPE WITH MECHANICAL JOINT.

TYPICAL PIPE CROSSINGS AND PARALLELS
NOT TO SCALE

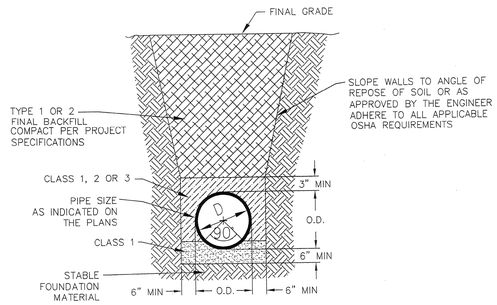

CL 50 DUCTILE IRON C900/C905 PVC PIPE TRENCH DETAIL
NOT TO SCALE

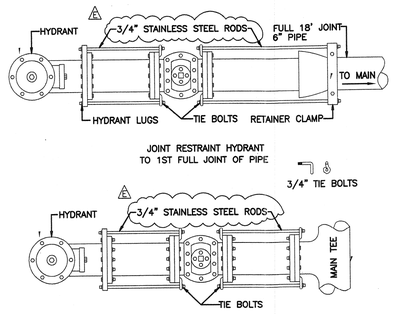

GUIDELINES FOR HYDRANT JOINT RESTRAINT
NOT TO SCALE

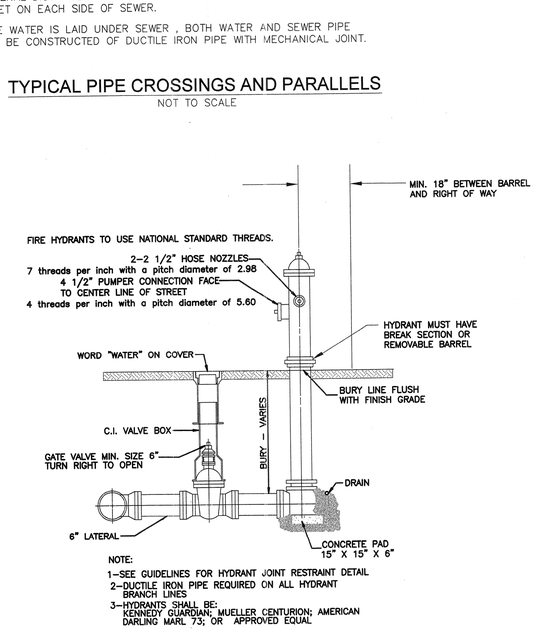

NOTE:
1–SEE GUIDELINES FOR HYDRANT JOINT RESTRAINT DETAIL
2–DUCTILE IRON PIPE REQUIRED ON ALL HYDRANT BRANCH LINES
3–HYDRANTS SHALL BE: KENNEDY GUARDIAN; MUELLER CENTURION; AMERICAN DARLING MARL 73; OR APPROVED EQUAL

GUIDELINES FOR STANDARD HYDRANT
NOT TO SCALE

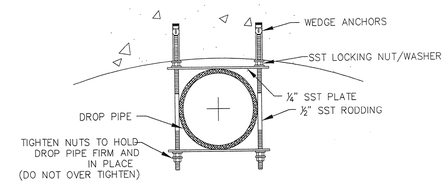

NOTE: ALL PARTS TO BE SST.

STRAP DETAIL
NOT TO SCALE

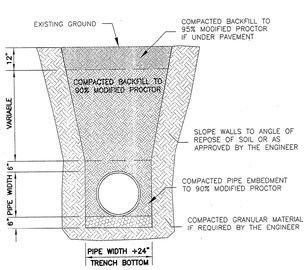

STANDARD PIPE TRENCH DETAIL
NOT TO SCALE

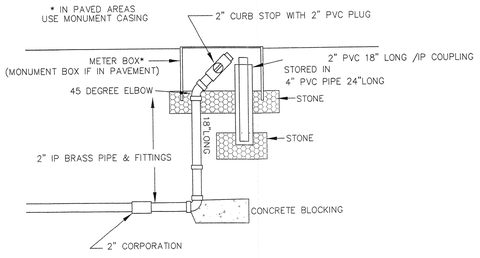

2" BLOWOFF
NTS

NOTE: AS OF JULY 1, 2008, NEW HANOVER COUNTY PUBLIC UTILITIES AND CITY OF WILMINGTON UTILITIES HAVE MERGED INTO CAPE FEAR PUBLIC UTILITY AUTHORITY (CFPUA), A REASONABLE ATTEMPT HAS BEEN MADE TO CHANGE ANY REFERENCE TO THE AFOREMENTIONED REGULATORY BODIES. SHOULD A REFERENCE REMAIN, PLEASE DISREGARD AND ADHERE TO CFPUA STANDARDS AND REGULATIONS

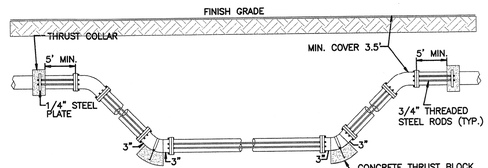

ROD REQUIREMENTS

SIZE OF 45 DEGREE BEND	STATIC THRUST IN POUNDS	NUMBER OF RODS REQUIRED
6"	4,328	2
8"	7,694	2
12"	17,312	2
16"	30,779	4
20"	48,091	6
24"	69,252	8

NOTES:
1. ONCE INSTALLED AND TIGHT, THE STEEL RODS AND BOLTS SHALL BE COATED WITH 2 COATS OF BITUMINOUS BASE PAINT.
2. CONCRETE SHALL NOT CONTACT BOLTS OR ENDS OF MECHANICAL JOINT BENDS.
3. TYPICAL MIN. CLEARANCE BETWEEN CONCRETE AND END OF BOLT MUST BE 3".
4. APPROVED OFFSETS CAN BE USED IN THIS APPLICATION.

STANDARD VERTICAL BEND
NOT TO SCALE

REV.NO.	DESCRIPTIONS REVISIONS	DATE
F	REVISED WATER LINE AND CROSS SECTIONS	09/08/08
E	REVISED PER NCDOT HYDRAULIC COMMENTS DATED 07/15/08	07/29/08
D	REVISION 2 PLAN SET RELEASE	06/26/08
	REVISED PER NCDOT ENCROACHMENT COMMENTS	06/06/08
	REVISED PER JIM BONSER'S COMMENTS	4-25-08
	REVISED PER NHC SEWER COMMENTS	3/28/08
A	REVISED PER NCDOT COMMENTS	12/20/07

SEAL

SEAL
PROFESSIONAL ENGINEER SEAL 22574 RICHARD M. CREED NORTH CAROLINA
07/08/08

McKIM&CREED
243 North Front Street
Wilmington, North Carolina 28401
Phone: (910)343–1048 , Fax: (910)251–8282
AA0002667 EB0006691
www.mckimcreed.com

Newland® COMMUNITIES
AT THE HEART OF GREAT LIVING

RIVER ROAD

UTILITY DETAILS

DATE:	24 OCT 07
MCE PROJ. #	02735-0007
DRAWN	JPS
DESIGNED	KCBE
CHECKED	KCBE
PROJ. MGR.	RMC

SCALE
HORIZONTAL: NA
VERTICAL: NA

M&C FILE NUMBER CU-503
DRAWING NUMBER 25

STATUS: FINAL DESIGN
REVISION F

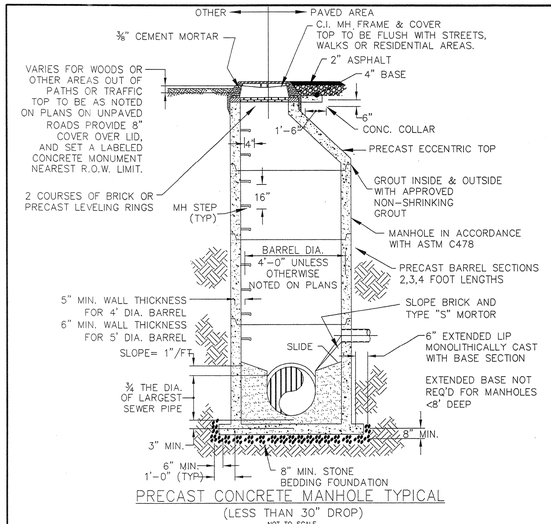

PRECAST CONCRETE MANHOLE TYPICAL
(LESS THAN 30" DROP)
NOT TO SCALE

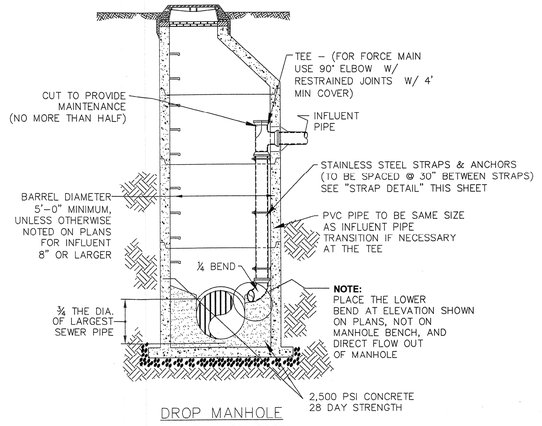

DROP MANHOLE
(MORE THAN 30" DROP)
NOT TO SCALE

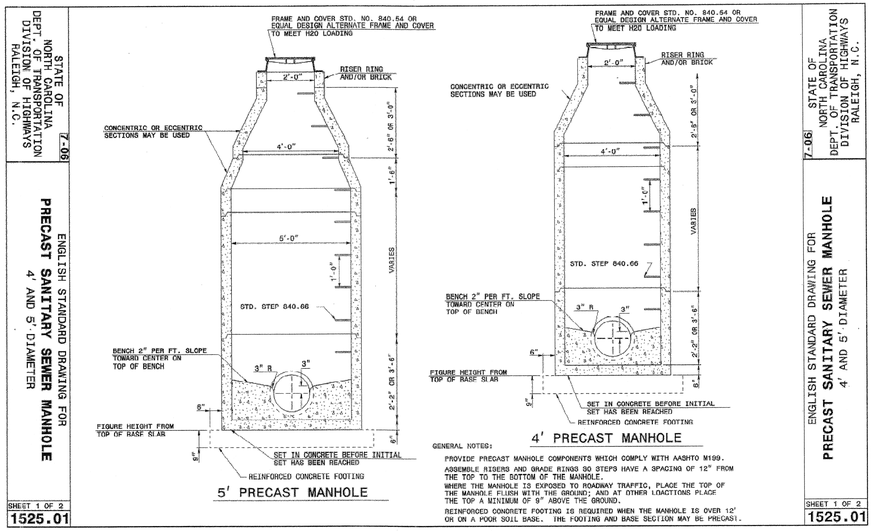

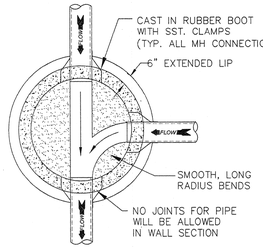

MANHOLE FLOOR PLAN
NOT TO SCALE

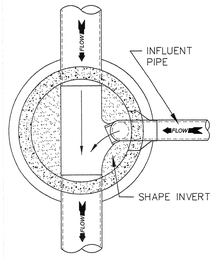

DROP MANHOLE FLOOR PLAN
NOT TO SCALE

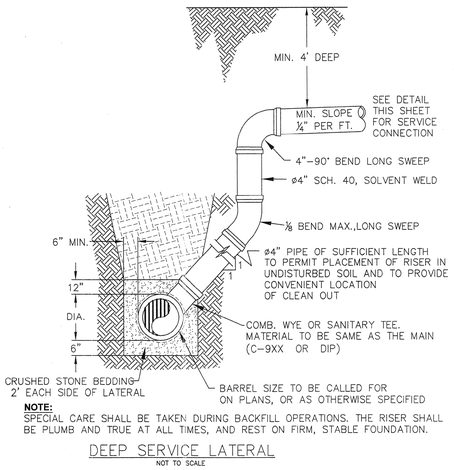

NOTE:
SPECIAL CARE SHALL BE TAKEN DURING BACKFILL OPERATIONS. THE RISER SHALL BE PLUMB AND TRUE AT ALL TIMES, AND REST ON FIRM, STABLE FOUNDATION.

DEEP SERVICE LATERAL
NOT TO SCALE

NOTE: AS OF JULY 1, 2008, NEW HANOVER COUNTY PUBLIC UTILITIES AND CITY OF WILMINGTON UTILITIES HAVE MERGED INTO CAPE FEAR PUBLIC UTILITY AUTHORITY (CFPUA). A RESONABLE ATTEMPT HAS BEEN MADE TO CHANGE ANY REFERENCE TO THE AFOREMENTIONED REGULATORY BODIES. SHOULD A REFERENCE REMAIN, PLEASE DISREGARD AND ADHERE TO CFPUA STANDARDS AND REGULATIONS

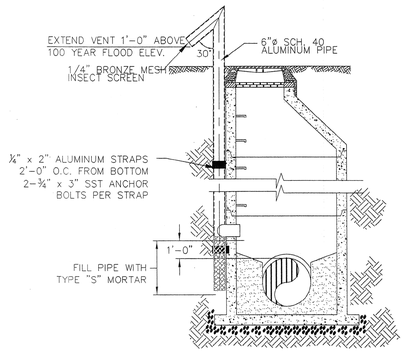

STANDARD VENT MANHOLE
NOT TO SCALE

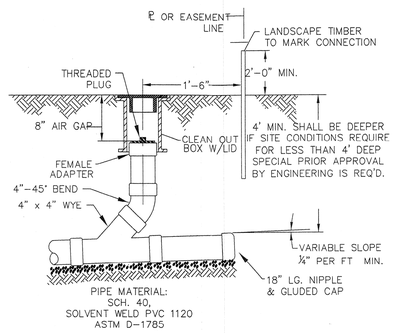

SERVICE CONNECTION & CLEAN-OUT
NOT TO SCALE

GENERAL NOTES:

1. NO EXCAVATED MATERIAL SHALL BE PLACED IN ANY STREAM, DITCH OR DRAINAGE-WAY.
2. THE CONTRACTOR IS RESPONSIBLE FOR LOCATING ALL UNDERGROUND UTILITIES BEFORE ANY CONSTRUCTION BEGINS.
3. THE CONTRACTOR IS RESPONSIBLE FOR TEMPORARY SEDIMENT AND EROSION CONTROL MEASURES WHILE CONSTRUCTION IS IN PROGRESS.
4. THE CONTRACTOR IS RESPONSIBLE FOR STABILIZATION OF ALL DISTURBED AREAS.
5. THE CONTRACTOR IS RESPONSIBLE FOR LAYDOWN & STOCKPILE AREAS (TO ARRANGE AND INSURE COMPLIANCE WITH ALL LOCAL AND STATE REGULATIONS).

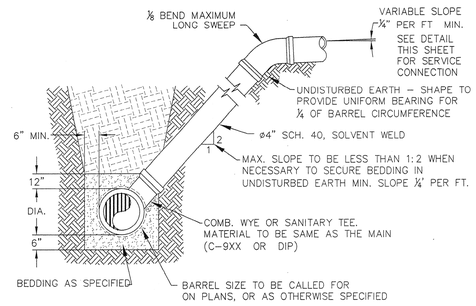

STANDARD SERVICE LATERAL
NOT TO SCALE

REV.NO.	DESCRIPTIONS	DATE
	REVISIONS	
F	REVISED WATER LINE AND CROSS SECTIONS	09/08/08
E	REVISED PER NCDOT HYDRAULIC COMMENTS DATED 07/15/08	07/29/08
D	REVISION 2 PLAN SET RELEASE	06/26/08
	REVISED PER NCDOT ENCROACHMENT COMMENTS	06/06/08
	REVISED PER NHC SEWER COMMENTS	3/28/08
C	REVISED PER NCDOT COMMENTS	12/20/07

SEAL

SEAL 22574 ENGINEER RICHARD M. KOBE NORTH CAROLINA PROFESSIONAL 09/08/08

McKIM & CREED
243 North Front Street
Wilmington, North Carolina 28401
Phone: (910)343-1048 , Fax: (910)251-8282
AA0002667 EB0006691
www.mckimcreed.com

Newland® COMMUNITIES
AT THE HEART OF GREAT LIVING

RIVER ROAD

UTILITY DETAILS

DATE:	24 OCT 07
MCE PROJ. #	02735-0007
DRAWN	JPS
DESIGNED	KOBE
CHECKED	KOBE
PROJ. MGR.	RMC

SCALE
HORIZONTAL: NA
VERTICAL: NA

M&C FILE NUMBER: CU-504
DRAWING NUMBER: 26

STATUS: FINAL DESIGN
REVISION: F

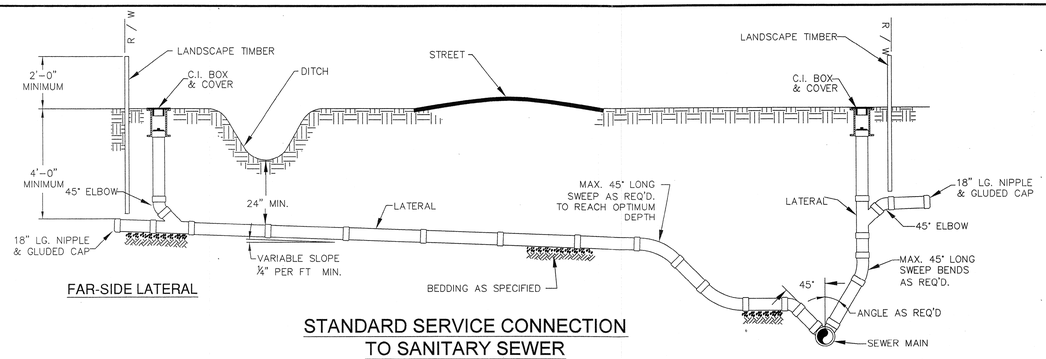

STANDARD SERVICE CONNECTION TO SANITARY SEWER

NOT TO SCALE

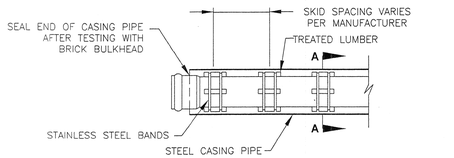

SEWER PIPE CASING SKID DETAIL

NOT TO SCALE

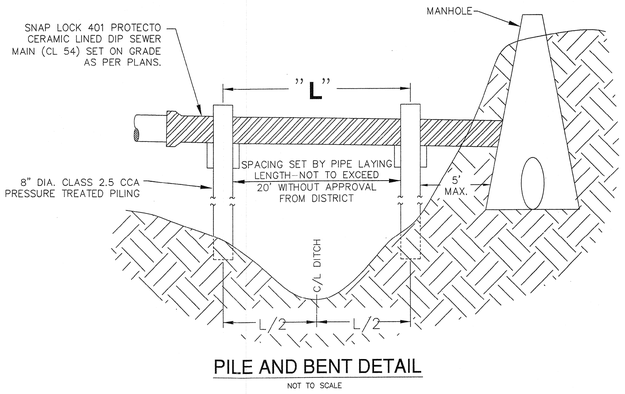

PILE AND BENT DETAIL

NOT TO SCALE

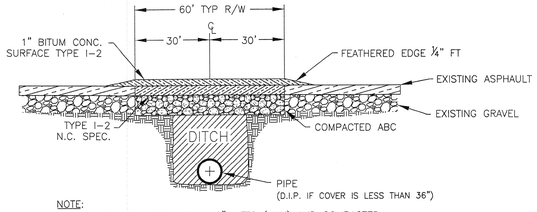

NOTE:
BACKFILL TO BE INSTALLED IN 6" LIFTS (MAX) AND COMPACTED TO A MINIMUM DENSITY OF 95% AS DETERMINED BY THE MODIFIED PROCTOR METHOD.

CUT-BACK TO BE PREFORMED AFTER TRENCH BACKFILLING AND COMPACTION.

PAVEMENT REPAIR WHERE PIPE INSTALLED

NOT TO SCALE

NOTE:
PAVEMENT WIDTH AND LOCATION IN R/W VARIES. SEE PLAN FOR INDIVIDUAL LOCATION.

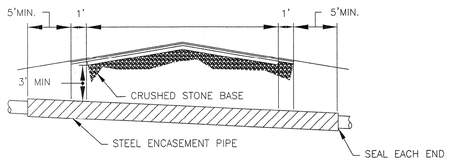

CASING WILL BE INSTALLED AT LINE AND GRADE SHOWN ON INDIVIDUAL PROFILE FOR EACH CROSSING. BORING/JACKING TO LINE AND GRADE IS REQUIRED.

TYPICAL BORING/JACKING DETAIL

NOT TO SCALE

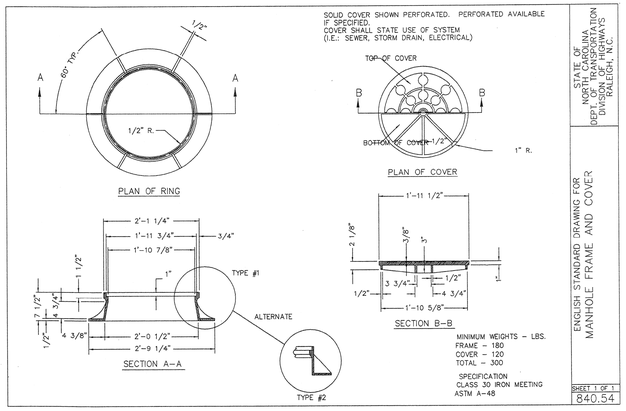

STATE OF NORTH CAROLINA DEPARTMENT OF TRANSPORTATION DIVISION OF HIGHWAYS RALEIGH, N.C.

ENGLISH STANDARD DRAWING FOR MANHOLE FRAME AND COVER

SHEET 1 OF 1
840.54

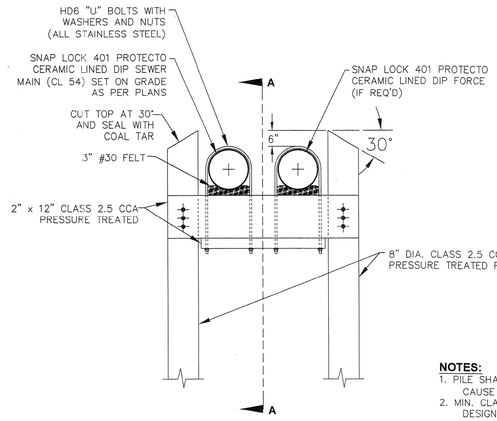

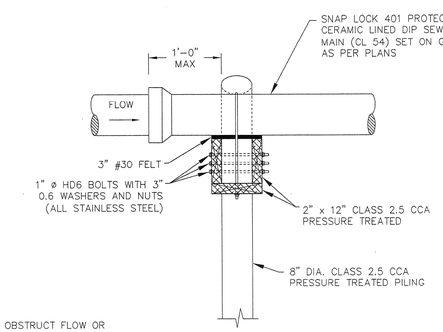

SECTION A-A
NOT TO SCALE

NOTES:
1. PILE SHALL NOT OBSTRUCT FLOW OR CAUSE EROSION OF DITCH/STREAM BANK.
2. MIN. CLASS 54 DIP-ENGINEER MUST DESIGN LOADING.

PILE AND BENT SECTION / DETAIL

NOT TO SCALE

NOTE: AS OF JULY 1, 2008, NEW HANOVER COUNTY PUBLIC UTILITIES AND CITY OF WILMINGTON UTILITIES HAVE MERGED INTO CAPE FEAR PUBLIC UTILITY AUTHORITY (CFPUA), A REASONABLE ATTEMPT HAS BEEN MADE TO CHANGE ANY REFERENCE TO THE AFOREMENTIONED REGULATORY BODIES. SHOULD A REFERENCE REMAIN, PLEASE DISREGARD AND ADHERE TO CFPUA STANDARDS AND REGULATIONS

GENERAL NOTES:

1. NO EXCAVATED MATERIAL SHALL BE PLACED IN ANY STREAM, DITCH OR DRAINAGE-WAY.
2. THE CONTRACTOR IS RESPONSIBLE FOR LOCATING ALL UNDERGROUND UTILITIES BEFORE ANY CONSTRUCTION BEGINS.
3. THE CONTRACTOR IS RESPONSIBLE FOR TEMPORARY SEDIMENT AND EROSION CONTROL MEASURES WHILE CONSTRUCTION IS IN PROGRESS.
4. THE CONTRACTOR IS RESPONSIBLE FOR STABILIZATION OF ALL DISTURBED AREAS.
5. THE CONTRACTOR IS RESPONSIBLE FOR LAYDOWN & STOCKPILE AREAS (TO ARRANGE AND INSURE COMPLIANCE WITH ALL LOCAL AND STATE REGULATIONS).

REV.NO.	DESCRIPTIONS REVISIONS	DATE
F	REVISED WATER LINE AND CROSS SECTIONS	09/08/08
E	REVISED PER NCDOT HYDRAULIC COMMENTS DATED 07/15/08	07/29/08
D	REVISION 2 PLAN SET RELEASE	06/26/08
	REVISED PER NCDOT ENCROACHMENT COMMENTS	06/06/08
	REVISED PER NHC SEWER DETAILS	3/28/08
C	REVISED PER NCDOT COMMENTS	12/20/07

SEAL

SEAL
22574
PROFESSIONAL ENGINEER
NORTH CAROLINA
09/08/08

McKIM & CREED
243 North Front Street
Wilmington, North Carolina 28401
Phone: (910)343-1048 , Fax: (910)251-8282
AA0002667 EB0006691
www.mckimcreed.com

Newland® COMMUNITIES
AT THE HEART OF GREAT LIVING

RIVER ROAD

UTILITY DETAILS

DATE:	24 OCT 07
MCE PROJ. #	02735-0007
DRAWN	JPS
DESIGNED	KCBE
CHECKED	KCBE
PROJ. MGR.	RMC

SCALE
HORIZONTAL: NA
VERTICAL: NA

M&C FILE NUMBER CU-505
DRAWING NUMBER 27

STATUS: FINAL DESIGN
REVISION F

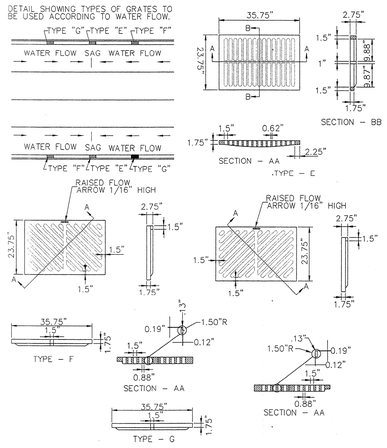

CATCH BASIN GRATE FOR PRE-CAST

NOT TO SCALE

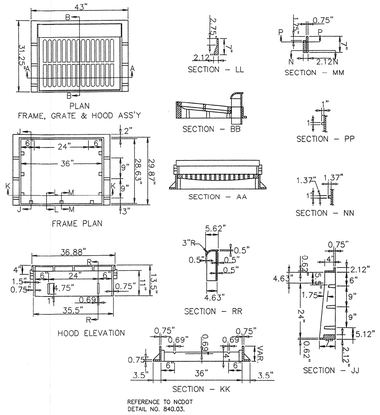

NOTE: USE TYPE "E","F",& "G" GRATE UNLESS OTHERWISE INDICATED

CATCH BASIN CASTING FOR PRE-CAST

NOT TO SCALE

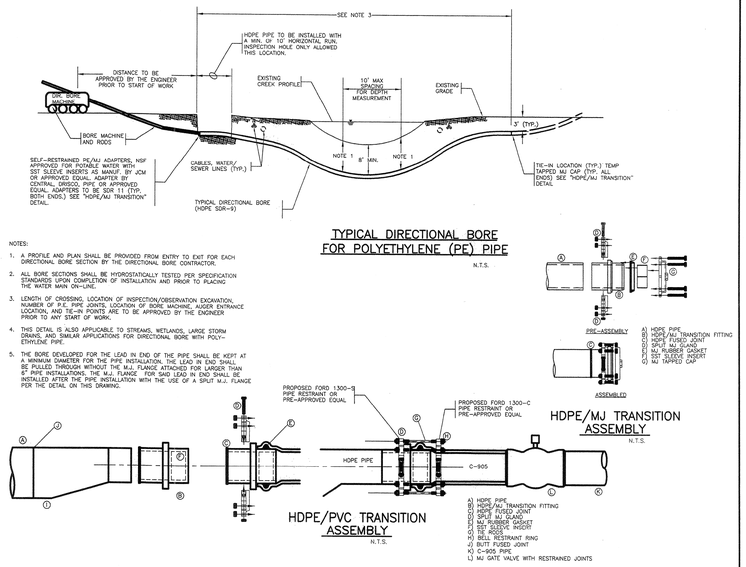

TYPICAL DIRECTIONAL BORE FOR POLYETHYLENE (PE) PIPE

N.T.S.

NOTES:

1. A PROFILE AND PLAN SHALL BE PROVIDED FROM ENTRY TO EXIT FOR EACH DIRECTIONAL BORE SECTION BY THE DIRECTIONAL BORE CONTRACTOR.
2. ALL BORE SECTIONS SHALL BE HYDROSTATICALLY TESTED PER SPECIFICATION STANDARDS UPON COMPLETION OF INSTALLATION AND PRIOR TO PLACING THE WATER MAIN ON-LINE.
3. LENGTH OF CROSSING, LOCATION OF INSPECTION/OBSERVATION EXCAVATION, NUMBER OF PULL PIPE JOINTS, LOCATION OF BORE MACHINE, AUGER ENTRANCE LOCATION, AND TIE-IN POINTS ARE TO BE APPROVED BY THE ENGINEER PRIOR TO ANY START OF WORK.
4. THIS DETAIL IS ALSO APPLICABLE TO STREAMS, WETLANDS, LARGE STORM DRAINS, AND SIMILAR APPLICATIONS FOR DIRECTIONAL BORE WITH POLY-ETHYLENE PIPE.
5. THE BORE DEVELOPED FOR THE LEAD IN END OF THE PIPE SHALL BE KEPT AT A MINIMUM DIAMETER FOR THE PIPE INSTALLATION. THE LEAD IN END SHALL BE PULLED THROUGH WITHOUT THE MJ FLANGE ATTACHED FOR LARGER THAN 8" PIPE INSTALLATIONS. THE MJ FLANGE FOR SAID LEAD IN END SHALL BE INSTALLED AFTER THE PIPE INSTALLATION WITH THE USE OF A SPLIT M.J. FLANGE PER THE DETAIL ON THIS DRAWING.

HDPE/PVC TRANSITION ASSEMBLY

N.T.S.

HDPE/MJ TRANSITION ASSEMBLY

N.T.S.

#9400 - WC AUTOMATIC FLUSHING DEVICE (WARM CLIMATES ONLY)

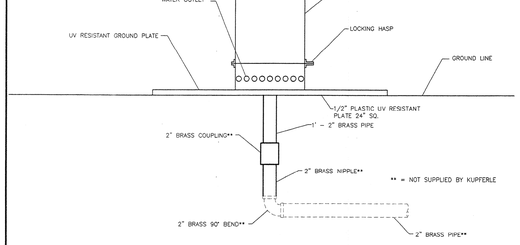

AUTOMATIC FLUSHING DEVICE SHALL HAVE A 2" BRASS MIP INLET, LEADING VERTICALLY THROUGH A UV RESISTANT GROUND PLATE, A MOUNTING FLANGE, AND ATTACHING TO A PLASTIC SCH 80 TRAFFIC BREAK-AWAY COUPLING. A 2" ALUMINUM QUICK DISCONNECT DEVICE SHALL BE LOCATED ABOVE THE TRAFFIC COUPLING, LEADING INTO THE 2" AUTOMATIC VALVE. AUTOMATIC SOLENOID VALVE SHALL BE LOCATED ABOVE GROUND FOR EASY ACCESS. HAVE INTERNAL, SELF-CLEANING DEBRIS SCREEN, AND HAVE A 220 PSI RATING. VALVE CONTROLLER WILL NOT REQUIRE A SECOND HAND-HELD DEVICE FOR PROGRAMMING, MUST HAVE A MINIMUM OF 9 POSSIBLE FLUSHING CYCLES PER DAY, SHALL BE SUBMERSIBLE TO 12 FEET, AND HAVE A 10 YEAR BATTERY LIFE. VALVE, SOLENOID, AND CONTROLLER SHALL BE LOCATED ABOVE WATER FLOW. SOLENOID SHALL HAVE NO LOOSE PARTS WHEN REMOVED FROM VALVE. VALVE, SOLENOID, AND CONTROLLER SHALL HAVE RUBBER CAPS FOR ADDED PROTECTION. EACH UNIT SHALL HAVE A DOUBLE-VALVE, ALL BRASS SAMPLING POINT. WATER SHALL EXIT UNIT HORIZONTALLY THROUGH HOLES LOCATED NEAR GROUNDLINE. ALL ABOVE-GROUND COMPONENTS SHALL BE CONTAINED WITHIN A UV-RESISTANT LOCKING DOMED COVER. AS MANUFACTURED BY KUPFERLE FOUNDRY COMPANY, ST. LOUIS, MO , 1-800-231-3990, OR APPROVED EQUAL.

AUTOMATIC FLUSHING DEVICE

NOT TO SCALE

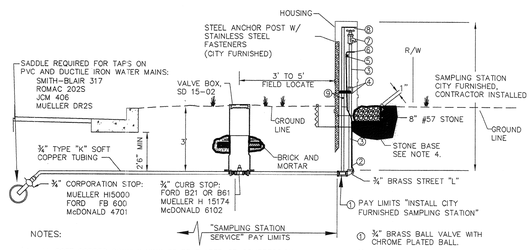

NOTES:

1. ALL SOFT COPPER CONNECTIONS TO BE FLARED OR COMPRESSION.
2. THE CONTRACTOR SHALL PROVIDE ALL MATERIALS AND LABOR UP TO THE ¾ INCH BRASS BALL VALVE INCLUDING CURB STOP AND VALVE BOX UNDER THE BID ITEM "¾ INCH SAMPLING STATION SERVICE". THE CONTRACTOR SHALL INSTALL THE SAMPLING STATION FURNISHED BY THE CITY UNDER THE BID ITEM "INSTALL SAMPLING STATION".
3. PROPRIETARY ITEMS ARE LISTED AS A MINIMUM LEVEL OF ACCEPTANCE; APPROVED EQUALS MAY BE SUBSTITUTED.
4. STONE BASE - 12 INCH SECTION OF 30 INCH PERFORATED CORRUGATED PLASTIC (HDPE OR PVC) PIPE WITH A MINIMUM OF 8 INCHES #57 STONE. WRAP PIPE (OUTSIDE) WITH FILTER FABRIC. STONE BASE IS INCIDENTAL TO BID ITEM "¾ INCH SAMPLING STATION SERVICE".

① ¾" BRASS BALL VALVE WITH CHROME PLATED BALL.
② ¾"BRASS ELBOW AND BRASS TUBING
③ ¾" PVC NIPPLE
④ COUPLING W/ STEM BRACE
⑤ ¼" BRASS PET COCK
⑥ PUMP CONNECTOR ¾" COPPER TUBING
⑦ BRASS WATER NOZZLE
⑧ OPERATING HANDLE OFF-ON
⑨ WELDED STOP LOCKS

3/4" SAMPLING STATION WATER SERVICE

NOT TO SCALE

NOTE: AS OF JULY 1, 2008, NEW HANOVER COUNTY PUBLIC UTILITIES AND CITY OF WILMINGTON UTILITIES HAVE MERGED INTO CAPE FEAR PUBLIC UTILITY AUTHORITY (CFPUA), A RESONABLE ATTEMPT HAS BEEN MADE TO CHANGE ANY REFERENCE TO THE AFOREMENTIONED REGULATORY BODIES. SHOULD A REFERENCE REMAIN, PLEASE DISREGARD AND ADHERE TO CFPUA STANDARDS AND REGULATIONS

REV.NO.	DESCRIPTIONS REVISIONS	DATE
F	REVISED WATER LINE AND CROSS SECTIONS	09/08/08
E	REVISED PER NCDOT HYDRAULIC COMMENTS DATED 07/15/08	07/29/08
D	REVISION 2 PLAN SET RELEASE	06/26/08
	REVISED PER NCDOT ENCROACHMENT COMMENTS	06/06/08
	REVISED PER NHC SEWER COMMENTS	3/28/08
C	REVISED PER NCDOT COMMENTS	12/20/07

SEAL

SEAL 22574 ENGINEER 09/08/08

McKIM&CREED
243 North Front Street
Wilmington, North Carolina 28401
Phone: (910)343-1048 , Fax: (910)251-8282
AA0002667 EB0006691
www.mckimcreed.com

Newland COMMUNITIES
AT THE HEART OF GREAT LIVING

RIVER ROAD

UTILITY DETAILS

DATE:	24 OCT 07
MCE PROJ. #	02735-0007
DRAWN	JPS
DESIGNED	KCBE
CHECKED	KCBE
PROJ. MGR.	RMC

SCALE
HORIZONTAL: NA
VERTICAL: NA

MAC FILE NUMBER CU-506
DRAWING NUMBER 28

STATUS: FINAL DESIGN
REVISION F

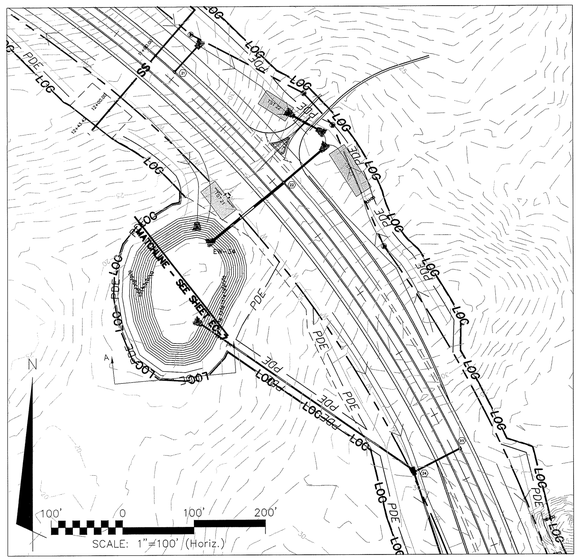

INFILTRATION POND A

STORM ELEVATIONS
2-YEAR = 14.14'
10-YEAR = 15.41'
25-YEAR = 16.24'
100-YEAR = 17.47'

INFILTRATION BASIN ELEVATIONS		
	TOP	BOTTOM
BASIN #	ELEVATION (FT)	ELEVATION (FT)
B	20.00	11.50

NOTE: INFILTRATION POND A MUST BE BUILT AT THE TIME OF INSTALLATION FOR EW-34.

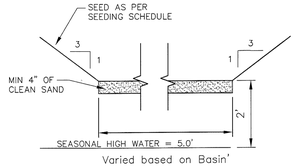

SECTION A-A (TYP.)

INFILTRATION BASIN CROSS SECTION

NOT TO SCALE

PDE=PUBLIC DRAINAGE EASEMENT

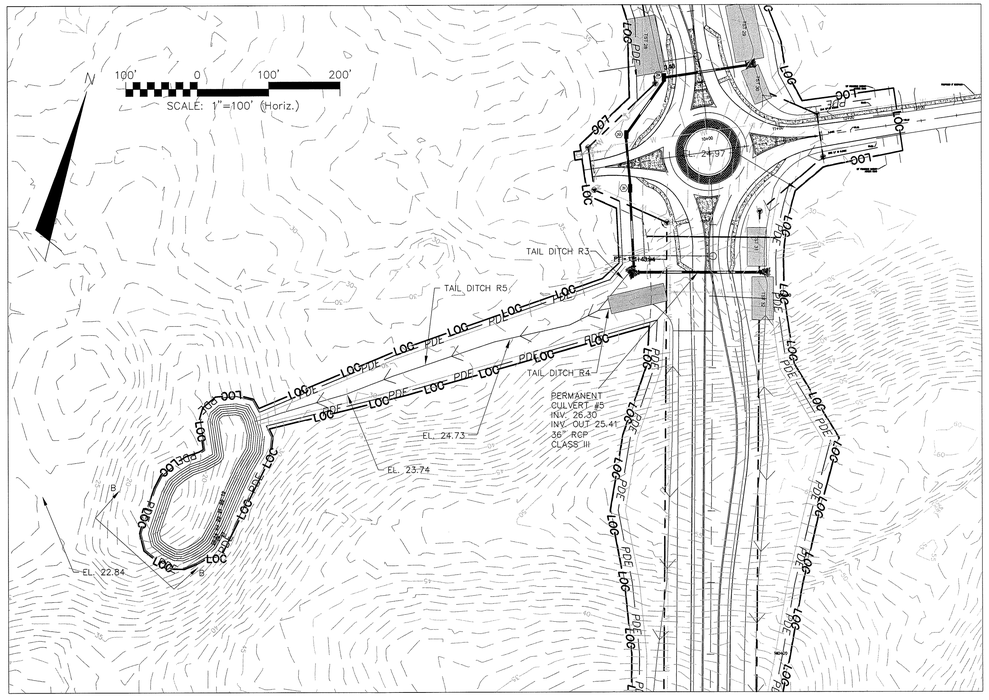

STA. 101+34 DETAIL

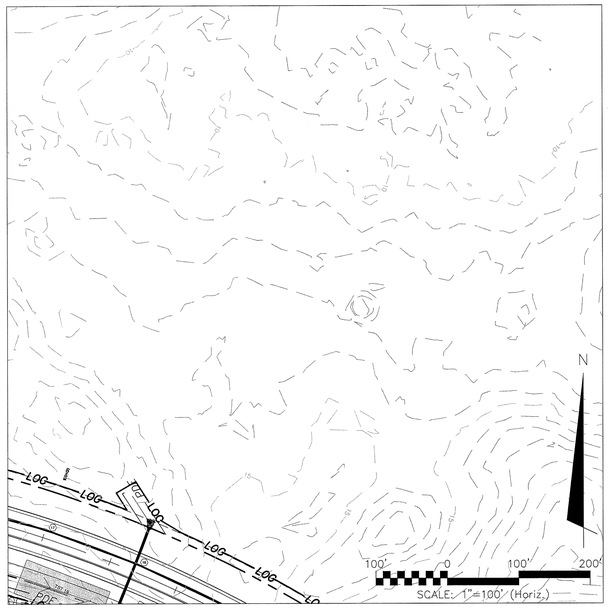

STA. 152+00 TO 158+00 DETAIL

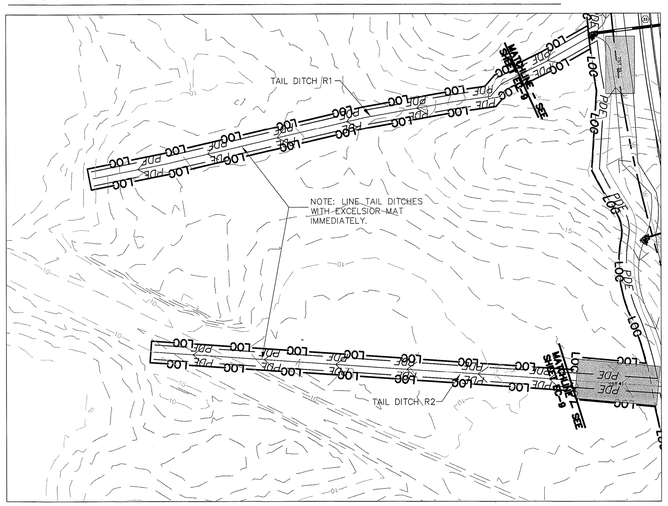

INFILTRATION POND B

INFILTRATION BASIN ELEVATIONS		
	TOP	BOTTOM
BASIN #	ELEVATION (FT)	ELEVATION (FT)
B	24.00	19.00

STORM ELEVATIONS
2-YEAR = 20.56'
10-YEAR = 21.16'
25-YEAR = 21.56'
100-YEAR = 22.17'

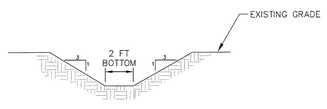

DITCH DETAIL

Not to Scale

TAIL DITCHES R1, R2, R3, R5, AND L1

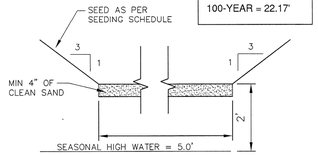

SECTION B-B (TYP.)

INFILTRATION BASIN CROSS SECTION

NOT TO SCALE

NOT FOR CONSTRUCTION

ISSUED FOR PERMITTING

REV.NO.	DESCRIPTIONS	DATE
G	REVISED PER DISTRICT NCDOT COMMENTS	10/14/08
F	REVISED WATER LINE AND CROSS SECTIONS	09/08/08

REVISIONS

SEAL

SEAL

NORTH CAROLINA PROFESSIONAL SEAL 22574 ENGINEER RICHARD M. COLLIER 10/17/08

McKIM & CREED
243 North Front Street
Wilmington, North Carolina 28401
Phone: (910)343-1048 , Fax: (910)251-8282
AA0002667 EB0006691
www.mckimcreed.com

Newland COMMUNITIES
AT THE HEART OF GREAT LIVING

RIVER ROAD

INFILTRATION PIT DETAILS

DATE:	JUNE 2007
MCE PROJ. #	02735-0007
DRAWN	BCE
DESIGNED	BCE
CHECKED	RMC
PROJ. MGR.	RMC

SCALE: HORIZONTAL: 1" = 60' VERTICAL:

M&C FILE NUMBER: CN-501

DRAWING NUMBER: 29

STATUS: FINAL DESIGN PLANS

REVISION: G

S:\27350007\80-Drawings\CN501A-027350007.dwg, INFILTRATION POND A, 10/17/2008 1:57:08 PM, belvington