ROADWAY DESIGN PLANS

RIVER ROAD REALIGNMENT

CITY OF WILMINGTON , NC

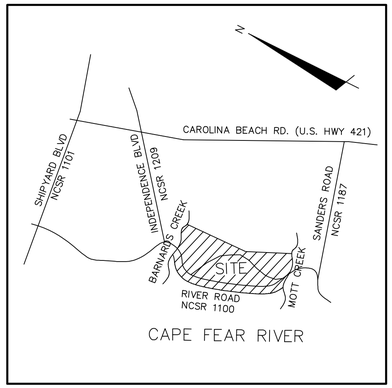

VICINITY MAP
NOT TO SCALE

DESIGN DATA

ADT 2006 = 9,100 VPD

ADT 2026 = 28,000 VPD

(20 YEAR DESIGN)

DVH = 10%

D = 60%

T = 5% *

DESIGN SPEED = 55 MPH

POSTED SPEED = 45 MPH

*(TTST 3% + DUAL 2%)

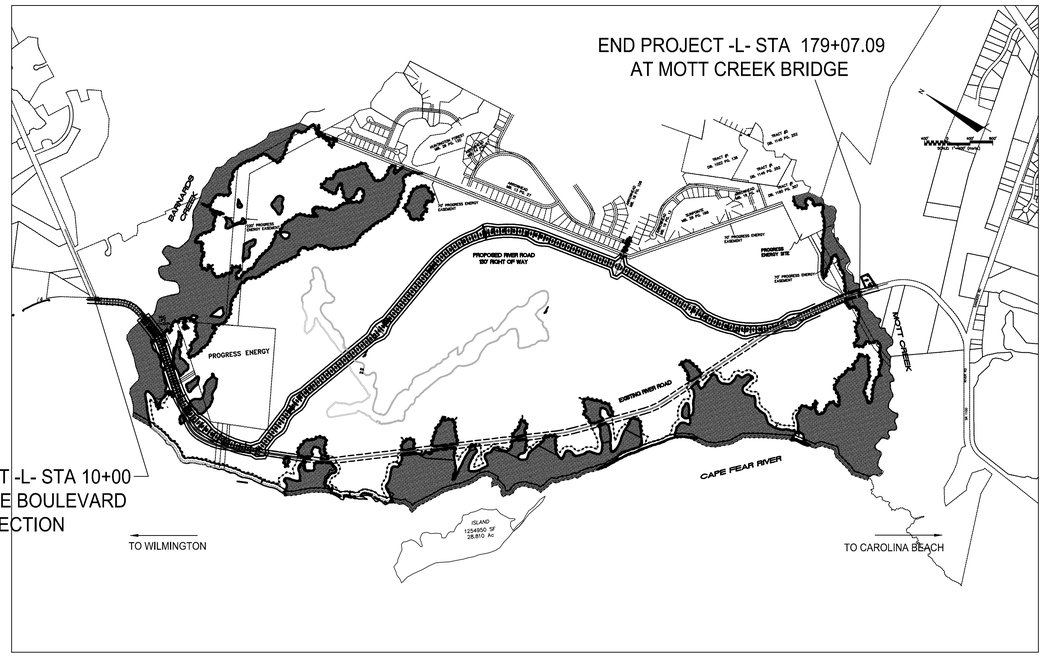

PLANS PREPARED BY:
RICHARD M. COLLIER, P.E.
PROJECT ENGINEER

CONTROL OF ACCESS:
THIS PROJECT IS NOT
CONTROLLED ACCESS

LENGTH OF PROJECT:
3.2 MILES

THIS PROJECT LIES WITHIN THE CITY OF WILMINGTON

SHEET INDEX

SHEET #	FILE #	DESCRIPTION	DATE
	G-001	TITLE SHEET	10/02/14
1A	G-002	PROJECT LAYOUT SHEET	10/02/14
2	CT-300	ROADWAY TYPICAL SECTION	10/02/14
2A	CT-301	ROADWAY TYPICAL SECTION	10/02/14
2B	CT-101	ROUNDABOUT DETAILS	10/02/14
2C	CT-101A	INTERSECTION DETAILS	10/02/14
2D	CT-302	ROADWAY DETAILS AND NOTES	10/02/14
3	CS-101	OVERALL SITE PLAN	10/02/14
3A	CR-101	GEOMETRY PLANS	10/02/14
3B	CR-102	GEOMETRY PLANS	10/02/14
3C	CR-103	GEOMETRY PLANS	10/02/14
3D	CR-104	GEOMETRY PLANS	10/02/14
3E	CR-105	GEOMETRY PLANS	10/02/14
3F	CR-106	GEOMETRY PLANS	10/02/14
3G	CR-107	GEOMETRY PLANS	10/02/14
3H	CR-108	GEOMETRY PLANS	10/02/14
4	CU-700	ROADWAY PLAN & PROFILE STA 10+00 – STA 18+00	10/02/14
5	CU-701	ROADWAY PLAN & PROFILE STA 18+00 – STA 28+00	10/02/14
6	CU-702	ROADWAY PLAN & PROFILE STA 28+00 – STA 39+00	10/02/14
7	CU-703	ROADWAY PLAN & PROFILE STA 39+00 – STA 50+00	10/02/14
8	CU-704	ROADWAY PLAN & PROFILE STA 50+00 – STA 61+00	10/02/14
9	CU-705	ROADWAY PLAN & PROFILE STA 61+00 – STA 72+00	10/02/14
10	CU-706	ROADWAY PLAN & PROFILE STA 72+00 – STA 84+00	10/02/14
11	CU-707	ROADWAY PLAN & PROFILE STA 84+00 – STA 96+00	10/02/14
12	CU-708	ROADWAY PLAN & PROFILE STA 96+00 – STA 108+00	10/02/14
12A	CU-708A	ROADWAY PLAN & PROFILE	10/02/14
13	CU-709	ROADWAY PLAN & PROFILE STA 108+00 – STA 121+00	10/02/14
14	CU-710	ROADWAY PLAN & PROFILE STA 121+00 – STA 131+00	10/02/14
15	CU-711	ROADWAY PLAN & PROFILE STA 131+00 – STA 143+00	10/02/14
15A	CU-711A	LORRAINE DRIVE CONNECTION	10/02/14
16	CU-712	ROADWAY PLAN & PROFILE STA 143+00 – STA 155+00	10/02/14
17	CU-713	ROADWAY PLAN & PROFILE STA 155+00 – STA 166+00	10/02/14
18	CU-714	ROADWAY PLAN & PROFILE STA 166+00 – STA 178+00	10/02/14
19	CU-715	ROADWAY PLAN & PROFILE STA 178+00 – STA STA 182+00	10/02/14
20	CT-501	NCDOT ROADWAY DETAILS	10/02/14
21	CT-502	NCDOT ROADWAY DETAILS	10/02/14
22	CT-503	NCDOT ROADWAY DETAILS	10/02/14
22A	CT-503A	NCDOT ROADWAY DETAILS	10/02/14
23	CU-501	UTILITY DETAILS	10/02/14
24	CU-502	UTILITY DETAILS	10/02/14
25	CU-503	UTILITY DETAILS	10/02/14
26	CU-504	UTILITY DETAILS	10/02/14
27	CU-505	UTILITY DETAILS	10/02/14
28	CU-506	UTILITY DETAILS	10/02/14
29	CN-501	INFILTRATION PIT DETAIL SHEET	10/02/14
PM-1	CP-101	PAVEMENT MARKING & SIGN PLANS STA. 10+00 TO STA. 28+00	10/02/14
PM-2	CP-102	PAVEMENT MARKING & SIGN PLANS STA. 28+00 TO STA. 50+00	10/02/14
PM-3	CP-103	PAVEMENT MARKING & SIGN PLANS STA. 50+00 TO STA. 72+00	10/02/14
PM-4	CP-104	PAVEMENT MARKING & SIGN PLANS STA. 72+00 TO STA. 96+00	10/02/14
PM-5	CP-105	PAVEMENT MARKING & SIGN PLANS STA. 96+00 TO STA. 120+00	10/02/14
PM-6	CP-106	PAVEMENT MARKING & SIGN PLANS STA. 120+00 TO STA. 143+00	10/02/14
PM-7	CP-107	PAVEMENT MARKING & SIGN PLANS STA. 143+00 TO STA. 166+00	10/02/14
PM-8	CP-108	PAVEMENT MARKING & SIGN PLANS STA. 166+00 TO STA. 179+47+00	10/02/14
PM-9	CP-109	ROADWAY DETAILS	10/02/14
PM-10	CP-110	ROADWAY DETAILS	10/02/14

ISSUED FOR PERMITTING
NOT FOR CONSTRUCTION

SEAL 022574 ENGINEER RICHARD MARK COLLIER
10/03/2014

OWNER / DEVELOPER:
NNP IV-Cape Fear River, LLC
3410 River Road, Suite 103
Wilmington, North Carolina 28412

McKIM&CREED
243 North Front Street
Wilmington, North Carolina 28401
Phone: (910)343-1048 , Fax: (910)251-8282
License: F-1222
www.mckimcreed.com

RIVERLIGHTS™ by Newland COMMUNITIES

Newland® COMMUNITIES

NASH NORTH AMERICA SEKISUI HOUSE, LLC

RIVER ROAD TRACT

NEWLAND COMMUNITIES

02735-0007

S:\2735\000790-Drawings\G001-2735-0007.dwg, 10/3/2014 12:35:26 PM, rilaretta, ANSI D (22.00 x 34.00 inches), 1:1

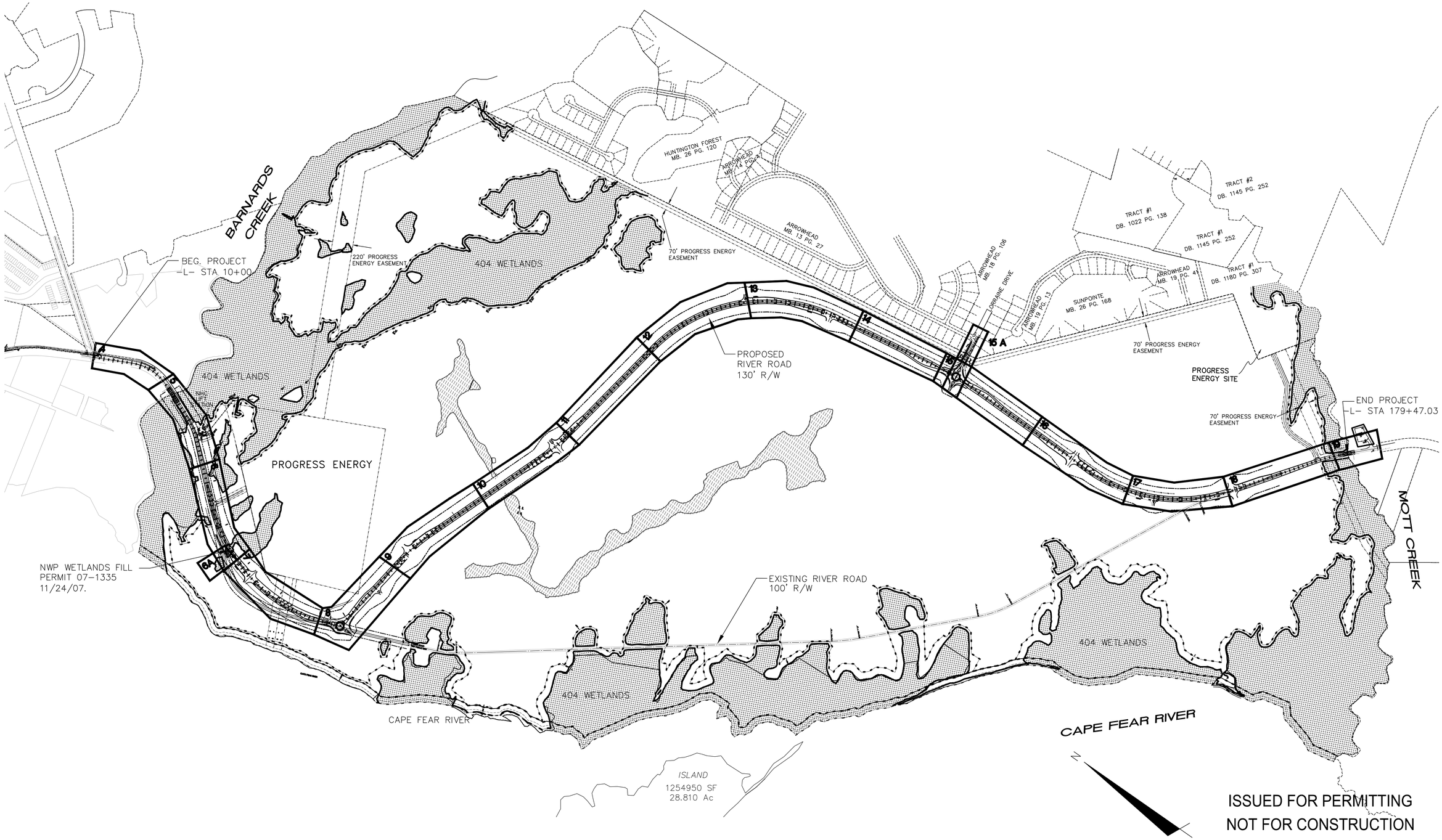

ISSUED FOR PERMITTING
NOT FOR CONSTRUCTION

REV.NO.	DESCRIPTIONS	DATE
	REVISIONS	

SEAL

SEAL 022574 PROFESSIONAL ENGINEER NORTH CAROLINA
10/03/2014

MCKIM&CREED
243 North Front Street
Wilmington, North Carolina 28401
Phone: (910)343-1048 , Fax: (910)251-8282
License: F-1222
www.mckimcreed.com

Newland® COMMUNITIES

NORTH AMERICA SCOTSIA HOUSE, LLC

RIVER ROAD

PROJECT LAYOUT SHEET

DATE:	SEPTEMBER 2014
MCE PROJ. #	2735-0007
DRAWN	
DESIGNED	
CHECKED	RMC
PROJ. MGR.	RMC

SCALE
HORIZONTAL: 1"=500'
VERTICAL: N/A

M&C FILE NUMBER G-002
DRAWING NUMBER 1A

STATUS: FINAL DESIGN PLANS
REVISION

S:\2735\0007\90-Drawings\G-002-027350007.dwg, 10/3/2014 11:42:43 AM, rilaurentia,
ANSI D (22.00 x 34.00 Inches), 1:1

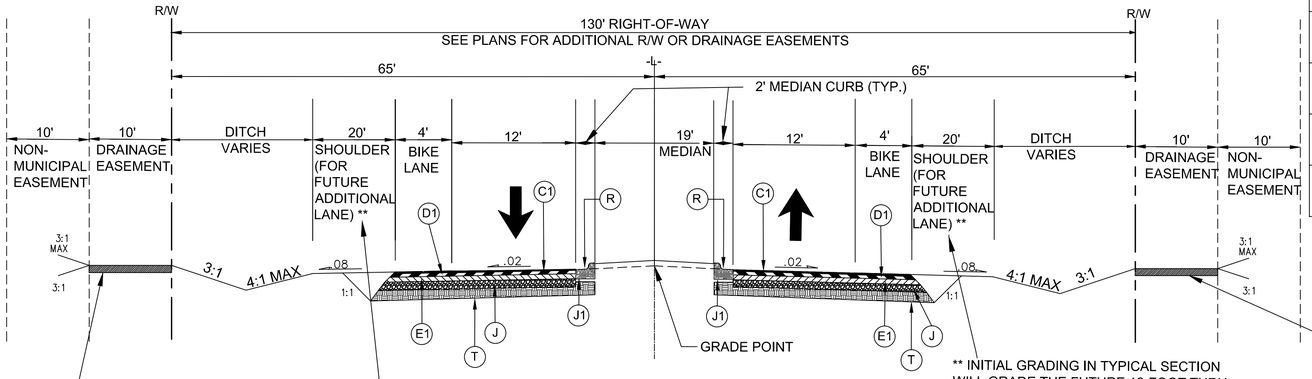

PROPOSED RIVER ROAD TYPICAL SECTION

STA: 30+21.40 TO 37+45.09
STA: 47+03.47 TO 58+15.16 (SEE TRAFFIC CIRCLE DETAILS)
STA: 67+39.82 TO 78+33.21
STA: 86+99.38 TO 113+72.16
STA: 126+40.42 TO 139+54.58 (SEE TRAFFIC CIRCLE DETAILS)
STA: 152+22.03 TO 153+93.37
STA: 158+56.06 TO 162+08.49
STA. 170+91.22 TO 171+41.19

	PAVEMENT SCHEDULE
C1	2" ASPHALT CONCRETE SURFACE COARSE, TYPE S9.5B AT AN AVERAGE RATE OF 224 LBS. PER SQ. YD.
D1	2.5" ASPHALT CONCRETE INTERMEDIATE COURSE, TYPE I 19.0 B AT AN AVERAGE RATE OF 285 LBS. PER SQ. YD.
E1	3.0" ASPHALT CONCRETE BASE COURSE, TYPE B 25.0B AT A RATE OF 342 LBS. PER SQ. YD.
J	8.0" AGGREGATE BASE COURSE
J1	6" AGGREGATE BASE COURSE TO BE INSTALLED UNDER ALL CURB AND GUTTER

	PAVEMENT SCHEDULE
R	1'-6" MEDIAN CURB AND GUTTER
T	EARTH MATERIAL - SUBGRADE SOILS
U	EXISTING PAVEMENT
W	VARIABLE DEPTH ASPHALT PAVEMENT (SEE STANDARD WEDGING DETAIL ON SHT 2)

NOTE: ONLY THE FINAL 2.0" OVERLAY OF S9.5B IS REQUIRED WHERE PAVEMENT WIDENING IS TO BE ACCOMPLISHED ABOVE AN EXISTING PAVEMENT STRUCTURE

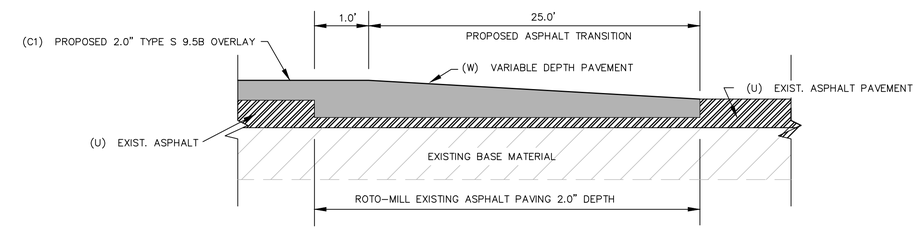

PAVEMENT TRANSITION DETAIL

NOT TO SCALE

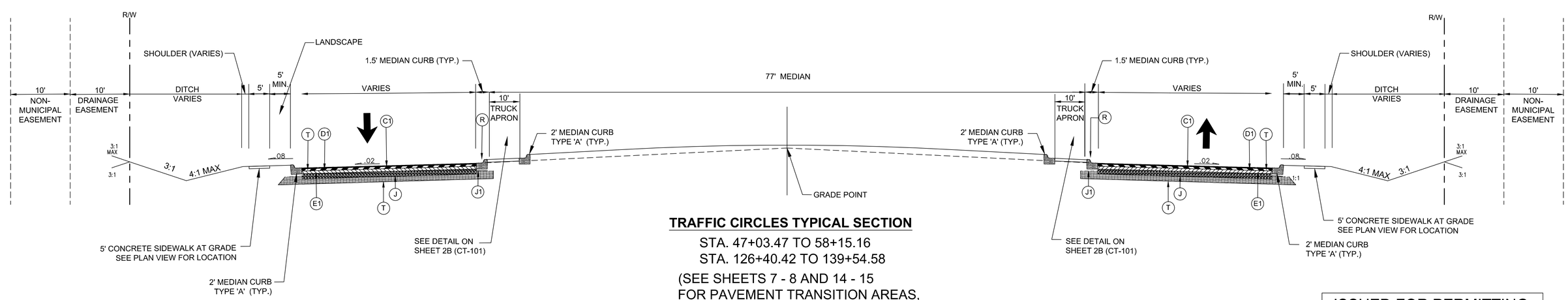

TRAFFIC CIRCLES TYPICAL SECTION

STA. 47+03.47 TO 58+15.16
STA. 126+40.42 TO 139+54.58

(SEE SHEETS 7 - 8 AND 14 - 15 FOR PAVEMENT TRANSITION AREAS, SPECIFIC WIDTHS, AND SUPER ELEVATION RATES.)

ISSUED FOR PERMITTING
NOT FOR CONSTRUCTION

REV.NO.	DESCRIPTIONS	DATE

REVISIONS

SEAL

SEAL 022574 ENGINEER RICHARD MCCOLLER 10/03/2014

McKIM&CREED
243 North Front Street
Wilmington, North Carolina 28401
Phone: (910)343-1048 , Fax: (910)251-8282
License: F-1222
www.mckimcreed.com

Newland® COMMUNITIES

NORTH AMERICA SERVICE HOUSE, LLC

RIVER ROAD

ROADWAY TYPICAL SECTIONS

DATE:	SEPTEMBER 2014
MCE PROJ. #	2735-0007
DRAWN	
DESIGNED	
CHECKED	RMC
PROJ. MGR.	RMC

SCALE
HORIZONTAL: N/A
VERTICAL: N/A

M&C FILE NUMBER CT-300
DRAWING NUMBER 2

STATUS: FINAL DESIGN PLANS
REVISION

S:\2735\0007\80-Drawings\CT300-027350007.dwg, 10/3/2014 11:43:03 AM, nilaureta, ANSI D (22.00 x 34.00 Inches), 1:1

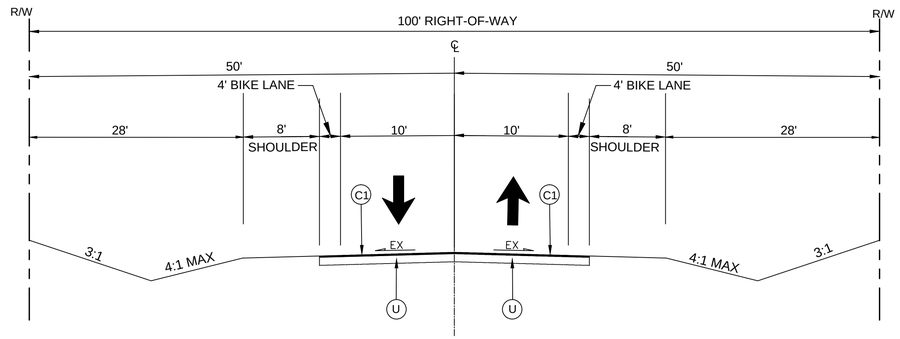

EXISTING RIVER ROAD

STA 10+00 TO 20+22 (END BRIDGE BARNARD'S CREEK)
OVERLAY EXISTING PAVEMENT FROM 20+22 TO
22+58.19

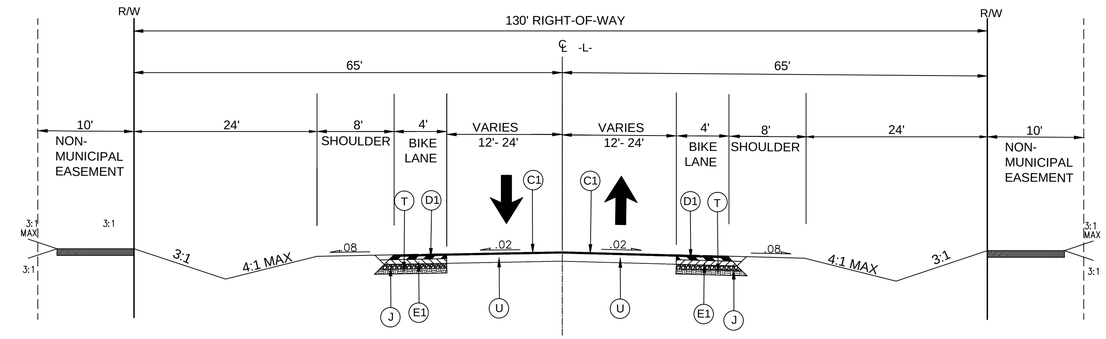

PROPOSED RIVER ROAD WIDENING TO / FROM MEDIAN SECTION

STA. 22+58.19 TO 30+21.40 (BEGIN MEDIAN)
STA.172+17.59 (END MEDIAN) TO
179+07.09 (BEGIN BRIDGE MOTT CREEK)

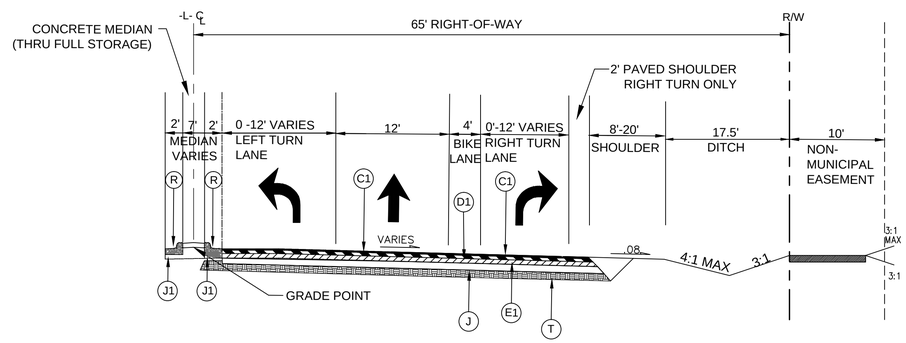

SOUTH BOUND RIGHT OR LEFT TURN LANE SECTION

STA: 37+45.09 TO 40+64.16
STA: 52+41.64 TO 62+71.51 (DUAL THRU LANES - SB)
STA: 59+16.35 TO 62+71.51 (LEFT TURN ONLY)
STA: 78+33.30 TO 81+88.67
STA: 113+72.16 TO 117+31.08 (RIGHT TURN ONLY)
STA: 144+02.78 TO 147+58.28
STA: 153+93.88 TO 157+44.01 (RIGHT TURN ONLY)
STA: 162+08.76 TO 165+71.28

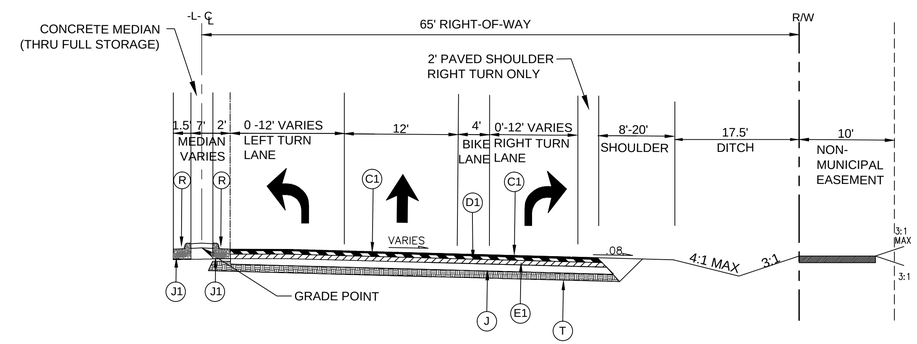

NORTH BOUND RIGHT OR LEFT TURN LANE SECTION

STA: 41+96.99 TO 45+61.74
STA: 40+06.00 TO 54+53.64 (DUAL THRU LANES - NB)
STA: 63+84.40 TO 67+39.72
STA: 83+43.84 TO 86+99.38
STA: 109+28.12 TO 112+78.12 (RIGHT TURN ONLY)
STA: 118+74.34 TO 122+29.84 (LEFT TURN ONLY)
STA: 148+88.96 TO 152+46.47
STA: 167+35.68 TO 170+91.28

ISSUED FOR PERMITTING
NOT FOR CONSTRUCTION

REV.NO.	DESCRIPTIONS	DATE
	REVISIONS	

SEAL

SEAL 022574 ENGINEER RICHARD MICHAEL COLLIER NORTH CAROLINA
10/03/2014

McKIM&CREED
243 North Front Street
Wilmington, North Carolina 28401
Phone: (910)343-1048 , Fax: (910)251-8282
License: F-1222
www.mckimcreed.com

Newland® COMMUNITIES

NASH North America Scotish House, LLC

RIVER ROAD

ROADWAY TYPICAL SECTIONS

DATE:	SEPTEMBER 2014
MCE PROJ. #	2735-0007
DRAWN	
DESIGNED	
CHECKED	RMC
PROJ. MGR.	RMC

SCALE
HORIZONTAL: N/A
VERTICAL: N/A

M&C FILE NUMBER CT-301
DRAWING NUMBER 2A

STATUS: FINAL DESIGN PLANS
REVISION

S:\2735\0007\80-Drawings\CT300-0273500007.dwg, 10/3/2014 11:43:05 AM, nlaureta,
ANSI D (22.00 x 34.00 Inches), 1:1

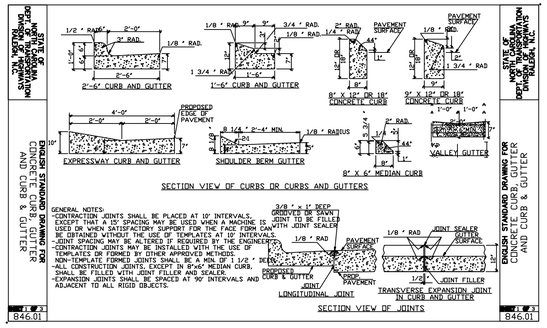

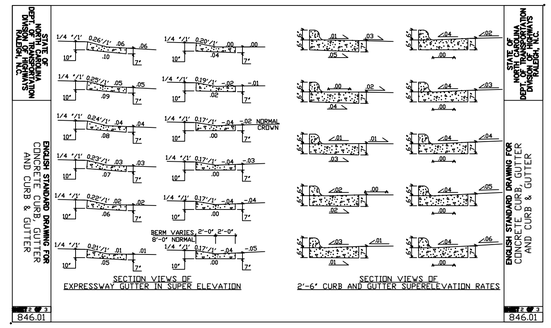

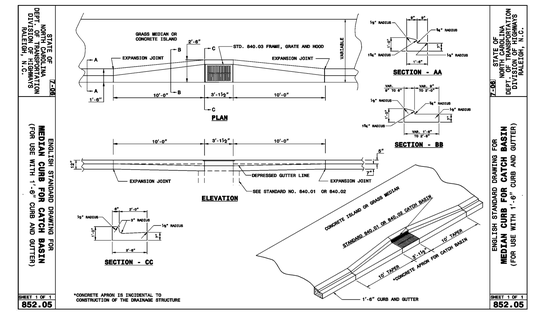

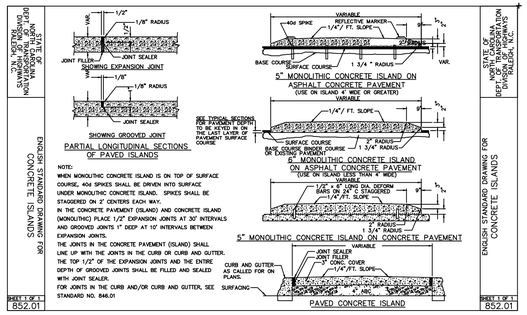

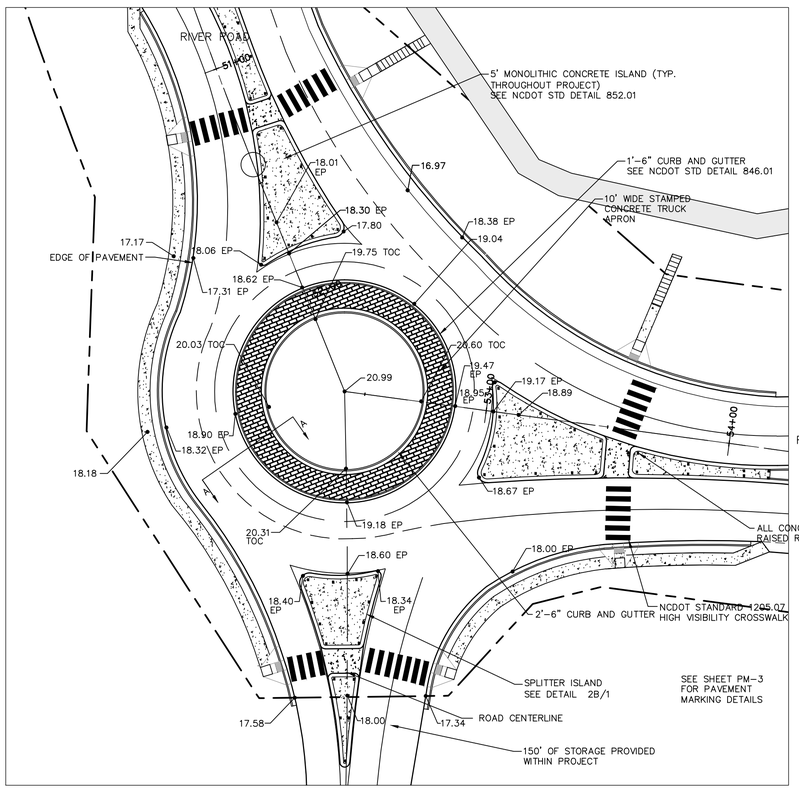

RIVER ROAD RE-ALIGNMENT AND DRIVEWAY 2
ROUNDABOUT PLAN

NOT TO SCALE

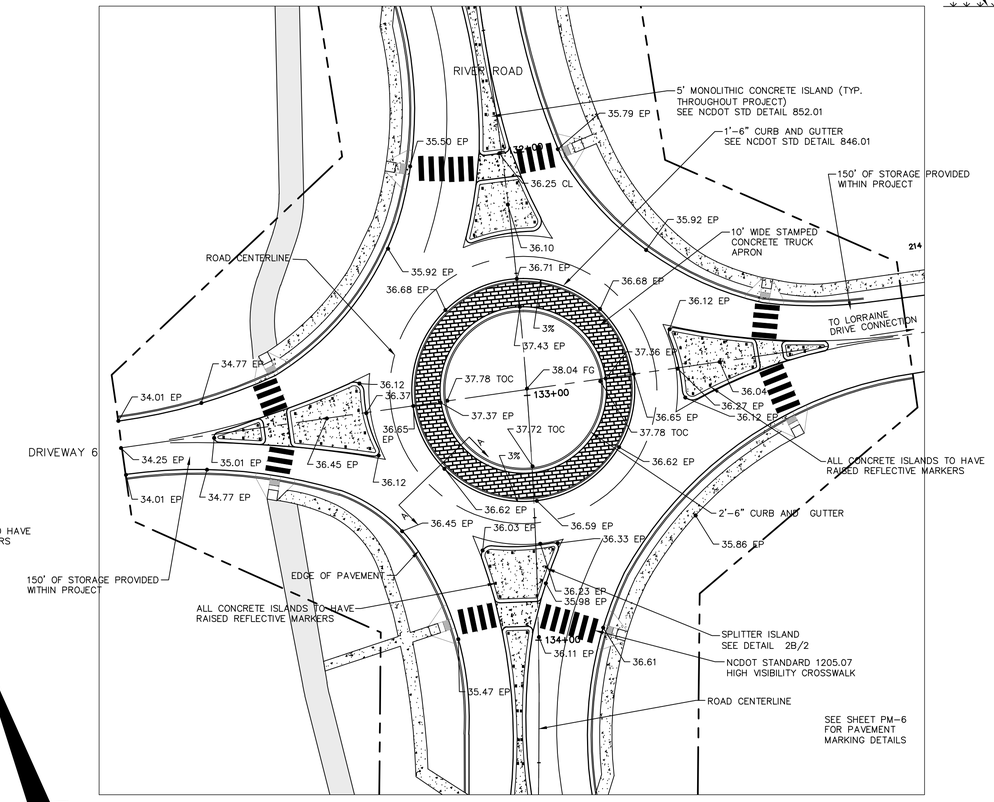

RIVER ROAD RE-ALIGNMENT AND LORRAINE DRIVE CONNECTION/DRIVEWAY 6
ROUNDABOUT PLAN

NOT TO SCALE

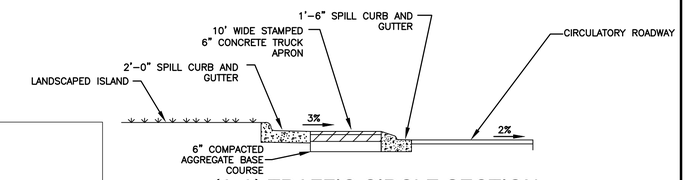

(A-A) TRAFFIC CIRCLE SECTION

NOT TO SCALE

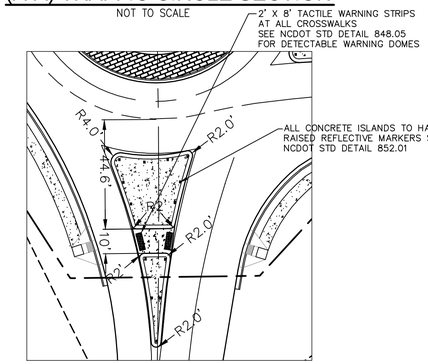

SPLITTER ISLANDS 2B/1

NOT TO SCALE

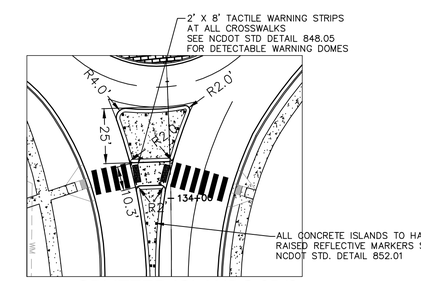

SPLITTER ISLANDS 2B/2

NOT TO SCALE

40' 0 40' 80'

SCALE: 1"=40' (Horiz.)

REV.NO.	DESCRIPTIONS	DATE

REVISIONS

SEAL

SEAL 022574 ENGINEER RICHARD MCALLISTER COLLIER 10/03/2014

McKIM&CREED
243 North Front Street
Wilmington, North Carolina 28401
Phone: (910)343-1048 , Fax: (910)251-8282
License: F-1222
www.mckimcreed.com

Newland® COMMUNITIES

NORTH AMERICA SCHOOL HOUSE, LLC

RIVER ROAD

ROUNDABOUT DETAILS
RIVER ROAD

DATE:	SEPTEMBER 2014
MCE PROJ. #	2735-0007
DRAWN	
DESIGNED	
CHECKED	RMC
PROJ. MGR.	RMC

SCALE
HORIZONTAL: 1"=40'
VERTICAL: 1"=4'

M&C FILE NUMBER CT-101

DRAWING NUMBER 2B

STATUS: FINAL DESIGN PLANS

REVISION

S:\2735\0007\80-Drawings\CT101-ROUNDABOUT DETAIL-27350007.dwg, 10/3/2014 11:43:53 AM, nlaurenta, ANSI D (22.00 x 34.00 Inches), 1:1

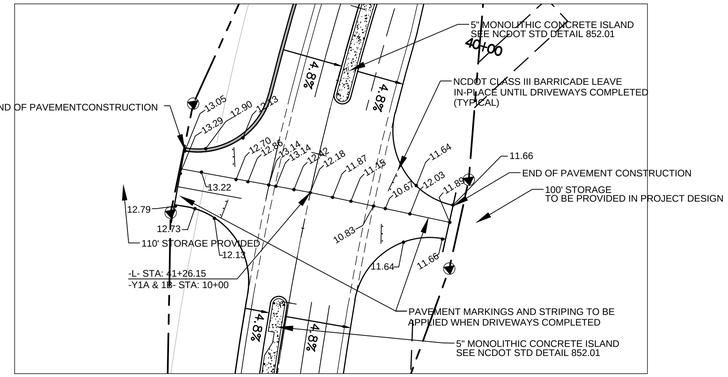

RIVER ROAD RE-ALIGNMENT AND DRIVEWAY 1A & 1B
INTERSECTION DETAIL 1"=50'

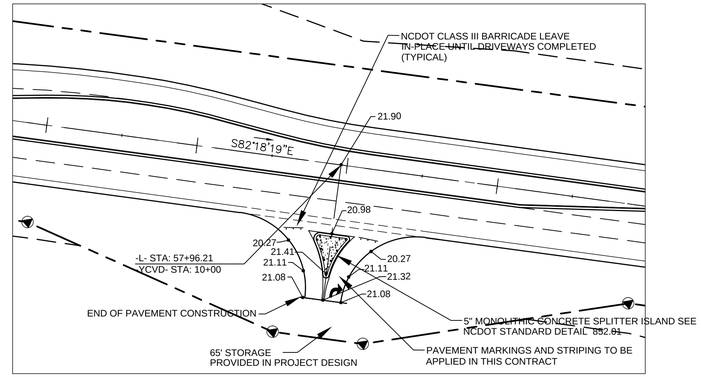

RIVER ROAD RE-ALIGNMENT AND COMMERCIAL VILLAGE DRIVEWAY
INTERSECTION DETAIL 1"=50'

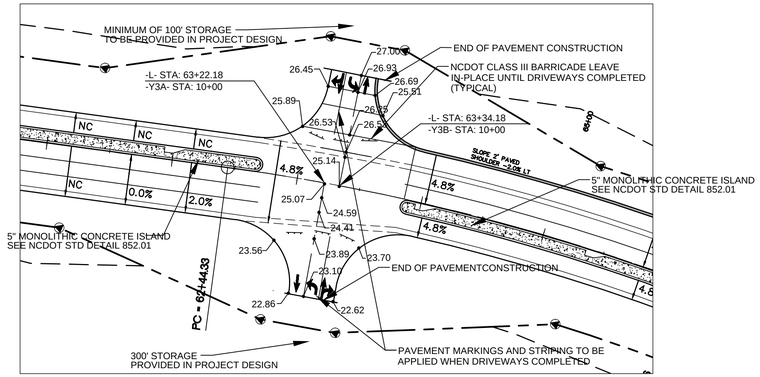

RIVER ROAD RE-ALIGNMENT AND DRIVEWAY 3A &3B
INTERSECTION DETAIL 1"=60'

END OF PAVEMENT CONSTRUCTION

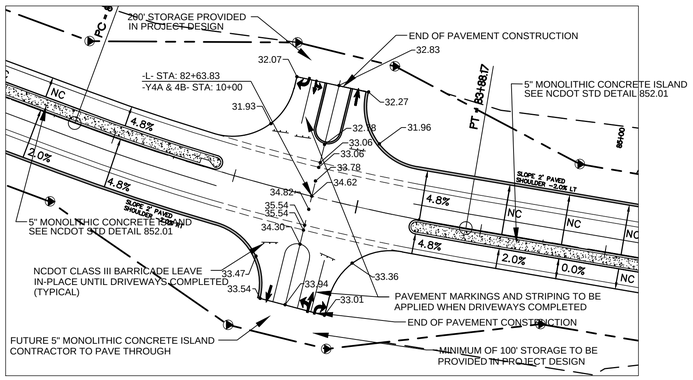

RIVER ROAD RE-ALIGNMENT AND DRIVEWAY 4A &4B
INTERSECTION DETAIL 1"=60'

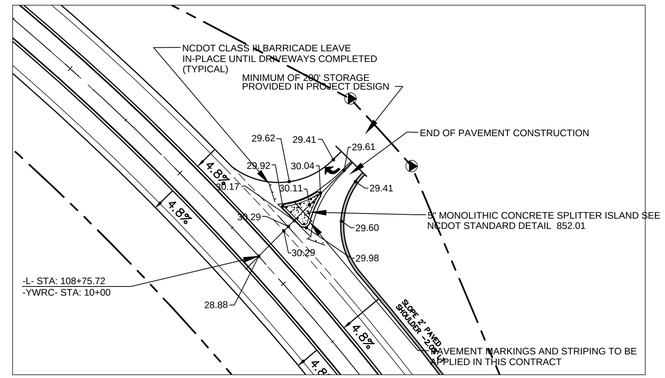

RIVER ROAD RE-ALIGNMENT AND WILDERNESS ROAD CONNECTION
INTERSECTION DETAIL 1"=50'

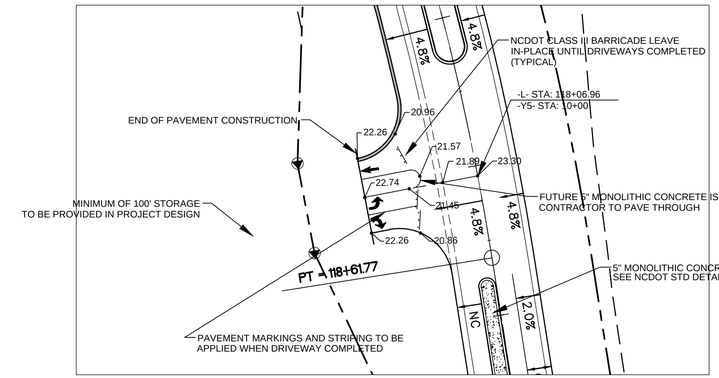

RIVER ROAD RE-ALIGNMENT AND DRIVEWAY 5
INTERSECTION DETAIL 1"=50'

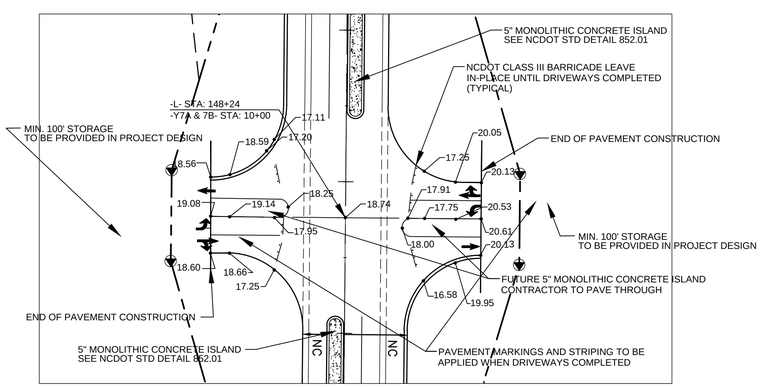

RIVER ROAD RE-ALIGNMENT AND DRIVEWAY 7A &7B
INTERSECTION DETAIL 1"=50'

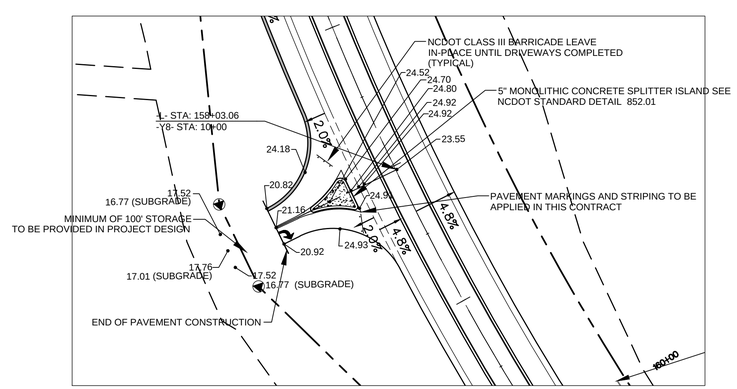

RIVER ROAD RE-ALIGNMENT AND DRIVEWAY 8
INTERSECTION DETAIL 1"=50'

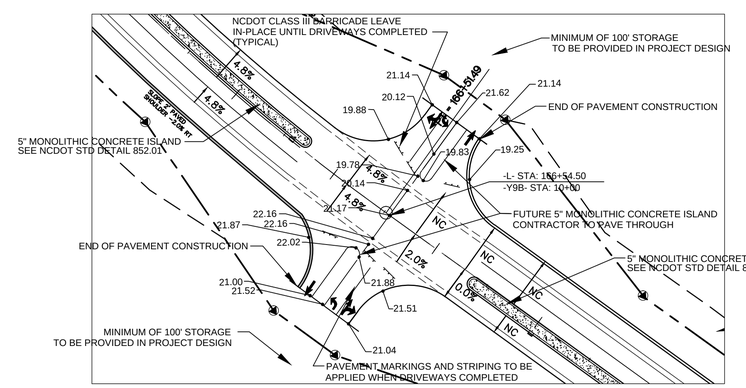

RIVER ROAD RE-ALIGNMENT AND DRIVEWAY 9A &9B
INTERSECTION DETAIL 1"=60'

REV.NO.	DESCRIPTIONS	DATE

REVISIONS

SEAL

SEAL 022574 ENGINEER PAUL MICHAEL CHANDLER NORTH CAROLINA 10/03/2014

McKIM&CREED
243 North Front Street
Wilmington, North Carolina 28401
Phone: (910)343-1048 , Fax: (910)251-8282
License: F-1222
www.mckimcreed.com

Newland® COMMUNITIES

NORTH AMERICA SCHOOL HOUSE, LLC

RIVER ROAD

INTERSECTION DETAILS
RIVER ROAD

DATE:	SEPTEMBER 2014
MCE PROJ. #	2735-0007
DRAWN	
DESIGNED	
CHECKED	RMC
PROJ. MGR.	RMC

SCALE
HORIZONTAL: N/A
VERTICAL: N/A

M&C FILE NUMBER CT-101A
DRAWING NUMBER 2C

STATUS: FINAL DESIGN PLANS
REVISION

S:\2735\0007\90-Drawings\CT101A-INTERSECTION DETAIL-27350007.dwg, 10/3/2014 11:45:13 AM, nilanetta, ANSI D (22.00 x 34.00 Inches), 1:1

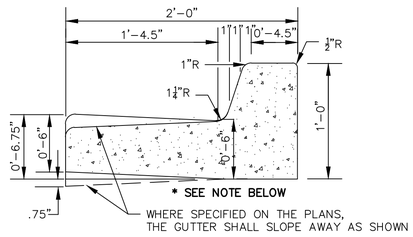

***NOTE:** 4" OF COMPACTED ABC SHALL BE PLACED BELOW TYPE–A CURB AND GUTTER. FURTHER, THE 6" ABC DEPTH SHALL BE EXTENDED 12" BEHIND THE BACK OF CURB PER CITY STD SD 1–02.

STANDARD CURB SECTION TYPE "A"
SD 7–01
NOT TO SCALE

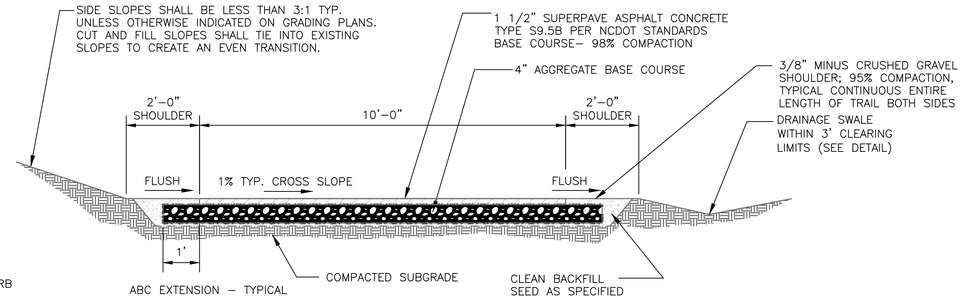

NOTES:
1. CROSS SLOPE DIRECTION VARIES. SEE LAYOUT PLANS FOR DIRECTION OF SLOPE.
2. CONTRACTOR IS RESPONSIBLE FOR RE–ESTABLISHING ALL SLOPES DISTURBED BY CONSTRUCTION.

10' WIDE MULTI-USE PATH
SECTION – NOT TO SCALE

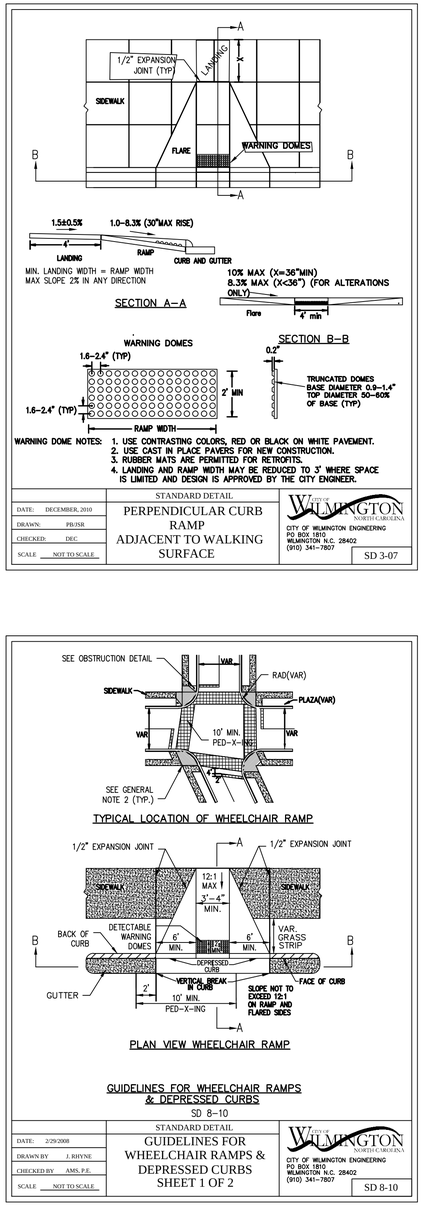

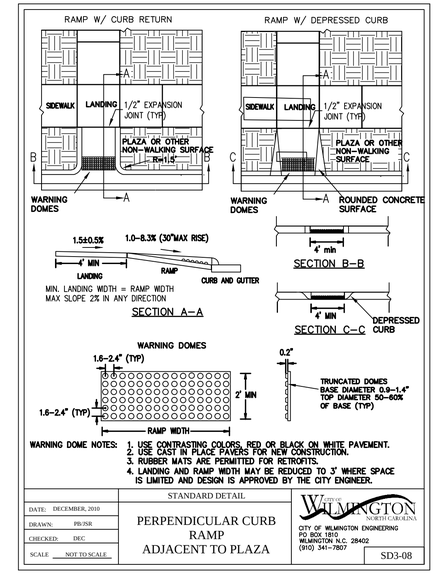

GENERAL NOTES:

1. ALL PAVEMENT MARKINGS IN PUBLIC RIGHTS–OF–WAY AND FOR DRIVEWAYS ARE TO BE THERMOPLASTIC AND MEET CITY AND/OR NCDOT STANDARDS. [DETAIL SD–13 COFW TECH STNDS]
2. ALL SIGNS AND PAVEMENT MARKINGS IN AREAS OPEN TO PUBLIC TRAFFIC ARE TO MEET MUTCD (MANUAL ON UNIFORM TRAFFIC CONTROL DEVICES) STANDARDS. [DETAIL SD 15–13 COFW TECH STNDS]
3. ALL TRAFFIC CONTROL SIGNS AND MARKINGS OFF THE RIGHT–OF–WAY ARE TO BE MAINTAINED BY THE PROPERTY OWNER IN ACCORDANCE WITH MUTCD STANDARDS.
4. A UTILITY CUT PERMIT IS REQUIRED FOR EACH OPEN CUT OF A CITY STREET. CONTACT 341–5888 FOR MORE DETAILS. IN CERTAIN CASES AN ENTIRE RESURFACING OF THE AREA BEING OPEN CUT MAY BE REQUIRED.
5. INSTALL REFLECTORS PER CITY AND NCDOT STANDARDS. TRAFFIC ENGINEERING MUST APPROVE OF PAVEMENT MARKING LAYOUT PRIOR TO ACTUAL STRIPING.
6. IT SHALL BE THE RESPONSIBILITY OF THE SUBDIVIDER TO ERECT OFFICIAL STREET NAME SIGNS AT ALL INTERSECTIONS ASSOCIATED WITH THE SUBDIVISION IN ACCORDANCE WITH THE TECHNICAL STANDARDS AND SPECIFICATIONS MANUAL. THE SUBDIVIDER MAY ACQUIRE AND ERECT OFFICIAL STREET NAME SIGNS OR MAY CHOOSE TO CONTRACT WITH THE CITY TO INSTALL THE STREET SIGNS AND THE SUBDIVIDER SHALL PAY THE COST OF SUCH INSTALLATION. CONTRACT TRAFFIC ENGINEERING AT 341–7888 TO DISCUSS INSTALLATION OF TRAFFIC AND STREET NAME SIGNS. PROPOSED STREET NAMES MUST BE APPROVED PRIOR TO INSTALLATION OF STREET NAME SIGNS.
7. ANY BROKEN OR MISSING SIDEWALK PANELS, DRIVEWAY PANELS AND CURBING WILL BE REPLACED.
8. A LANDSCAPING PLAN INDICATING THE LOCATION OF REQUIRED STREET TREES SHALL BE SUBMITTED TO THE CITY OF WILMINGTON TRAFFIC ENGINEERING DIVISION AND PARKS AND RECREATION DEPARTMENT FOR REVIEW AND APPROVAL PRIOR TO THE RECORDING OF THE FINAL PLAT. [SD 15–14 COFW TECH STDS]
9. CONTACT TRAFFIC ENGINEERING AT 341–7888 FORTY–EIGHT HOURS PRIOR TO ANY EXCAVATION IN THE RIGHT–OF–WAY.

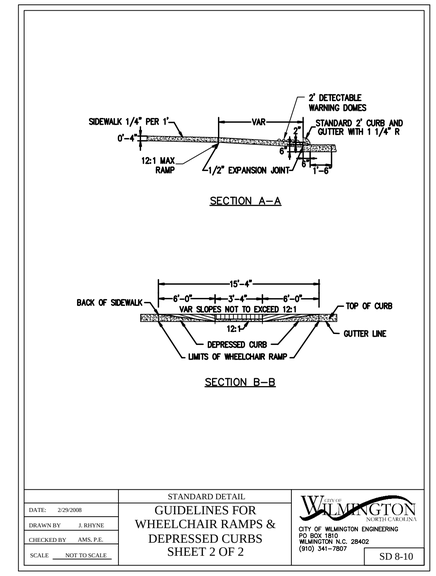

ISSUED FOR PERMITTING
NOT FOR CONSTRUCTION

REV.NO.	DESCRIPTIONS	DATE

REVISIONS

SEAL

McKIM&CREED
243 North Front Street
Wilmington, North Carolina 28401
Phone: (910)343–1048 , Fax: (910)251–8282
License: F–1222
www.mckimcreed.com

Newland COMMUNITIES
NASH North America Sanitas House, LLC

RIVER ROAD

ROADWAY TYPICAL SECTIONS

DATE:	SEPTEMBER 2014
MCE PROJ. #	2735–0007
DRAWN	
DESIGNED	
CHECKED	RMC
PROJ. MGR.	RMC

SCALE
HORIZONTAL: N/A
VERTICAL: N/A

M&C FILE NUMBER CT–302
DRAWING NUMBER 2D

STATUS: FINAL DESIGN PLANS
REVISION

S:\2735\0007\80-Drawings\CT300-0273500007.dwg, 10/3/2014 11:46:40 AM, nlaureta,
ANSI D (22.00 x 34.00 Inches), 1:1

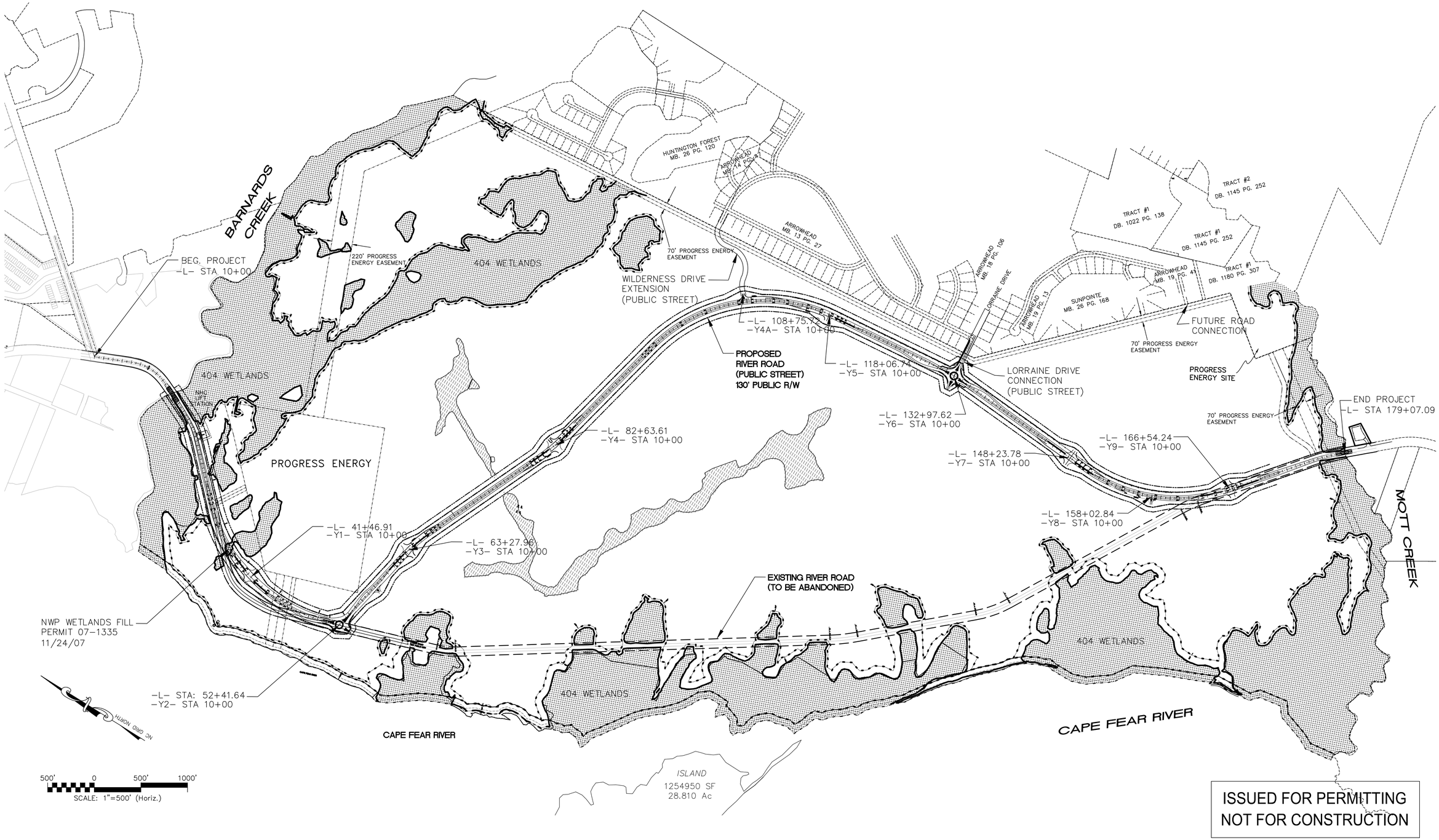

ISSUED FOR PERMITTING
NOT FOR CONSTRUCTION

REV.NO.	DESCRIPTIONS	DATE
	REVISIONS	

SEAL

SEAL 022574 ENGINEER NORTH CAROLINA
10/03/2014

McKIM&CREED
243 North Front Street
Wilmington, North Carolina 28401
Phone: (910)343-1048 , Fax: (910)251-8282
License: F-1222
www.mckimcreed.com

Newland® COMMUNITIES

NORTH AMERICA SCOTSIA HOUSE, LLC

RIVER ROAD

OVERALL SITE PLAN

DATE:	SEPTEMBER 2014
MCE PROJ. #	2735-0007
DRAWN	
DESIGNED	
CHECKED	RMC
PROJ. MGR.	RMC

SCALE
HORIZONTAL: 1"=500'
VERTICAL: N/A

M&C FILE NUMBER CS-101
DRAWING NUMBER 3

STATUS: FINAL DESIGN PLANS
REVISION

S:\2735\0007\90-Drawings\CS101-0027350007.dwg, 10/3/2014 11:47:13 AM, nburretta, ANSI D (22.00 x 34.00 Inches), 1:1

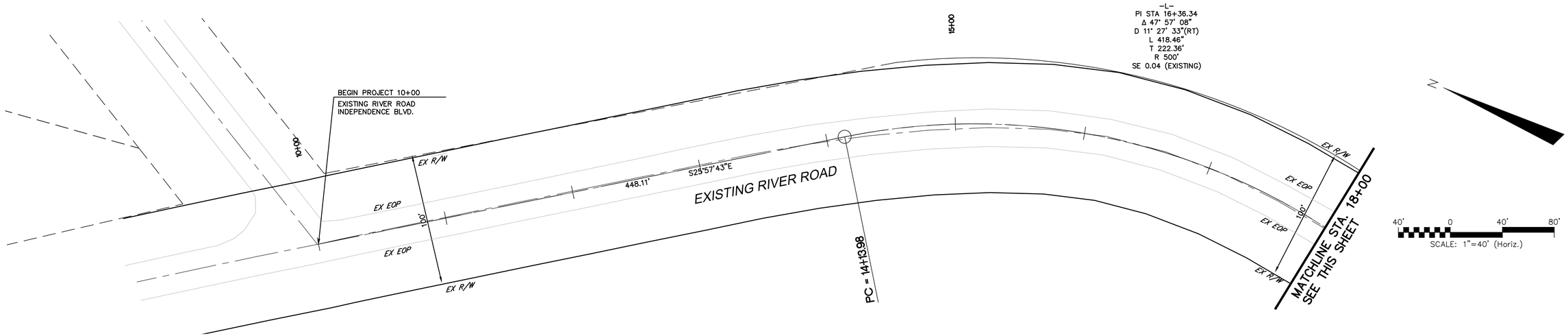

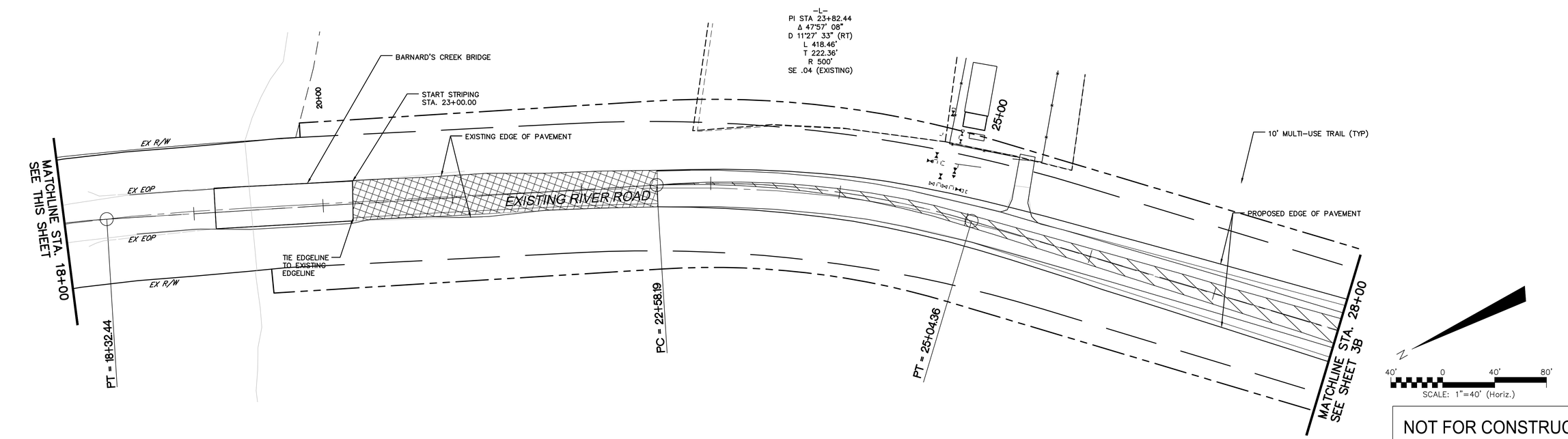

NOT FOR CONSTRUCTION

REV.NO.	DESCRIPTIONS	DATE

REVISIONS

SEAL

SEAL 022574 ENGINEER NORTH CAROLINA
10/03/2014

McKIM&CREED
243 North Front Street
Wilmington, North Carolina 28401
Phone: (910)343-1048 , Fax: (910)251-8282
License: F-1222
www.mckimcreed.com

Newland COMMUNITIES

North America Scenic House, LLC

RIVER ROAD

ROADWAY GEOMETRY PLANS
PROPOSED RIVER ROAD
STA 10+00 – STA 28+00

DATE:	SEPTEMBER 2014
MCE PROJ. #	2735-0007
DRAWN	
DESIGNED	
CHECKED	RMC
PROJ. MGR.	RMC

SCALE
HORIZONTAL: 1"=40'
VERTICAL: N/A

M&C FILE NUMBER CR-101
DRAWING NUMBER 3A

STATUS: FINAL DESIGN PLANS
REVISION

S:\2735\0007\90-Drawings\CR101-027350007.dwg, 10/3/2014 11:48:05 AM, nfiaretta, ANSI D (22.00 x 34.00 Inches), 1:1

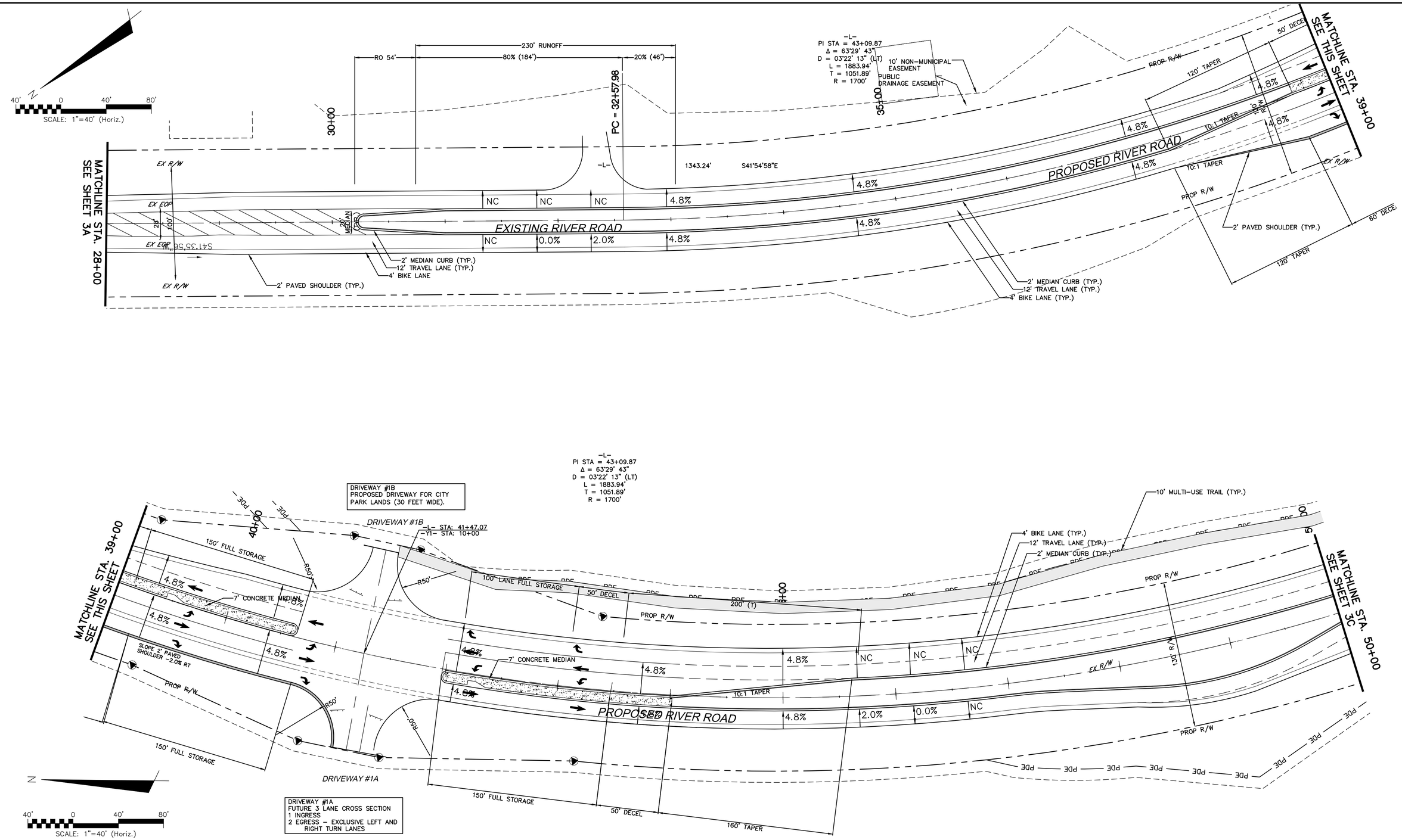

REV.NO.	DESCRIPTIONS	DATE
	REVISIONS	

SEAL

SEAL 022574 ENGINEER NORTH CAROLINA 10/03/2014

McKIM&CREED
243 North Front Street
Wilmington, North Carolina 28401
Phone: (910)343-1048 , Fax: (910)251-8282
License: F-1222
www.mckimcreed.com

Newland® COMMUNITIES

NAH North America Scissor House, LLC

RIVER ROAD

ROADWAY GEOMETRY PLANS
PROPOSED RIVER ROAD
STA 28+00 – STA 50+00

DATE:	SEPTEMBER 2014
MCE PROJ. #	2735-0007
DRAWN	
DESIGNED	
CHECKED	RMC
PROJ. MGR.	RMC

SCALE
HORIZONTAL: 1"=40'
VERTICAL: N/A

M&C FILE NUMBER CR-102
DRAWING NUMBER 3B

STATUS: FINAL DESIGN PLANS
REVISION

S:\2735\0007\80-Drawings\CR102-027350007.dwg, 10/3/2014 11:49:06 AM, nilaretta, ANSI D (22.00 x 34.00 Inches), 1:1

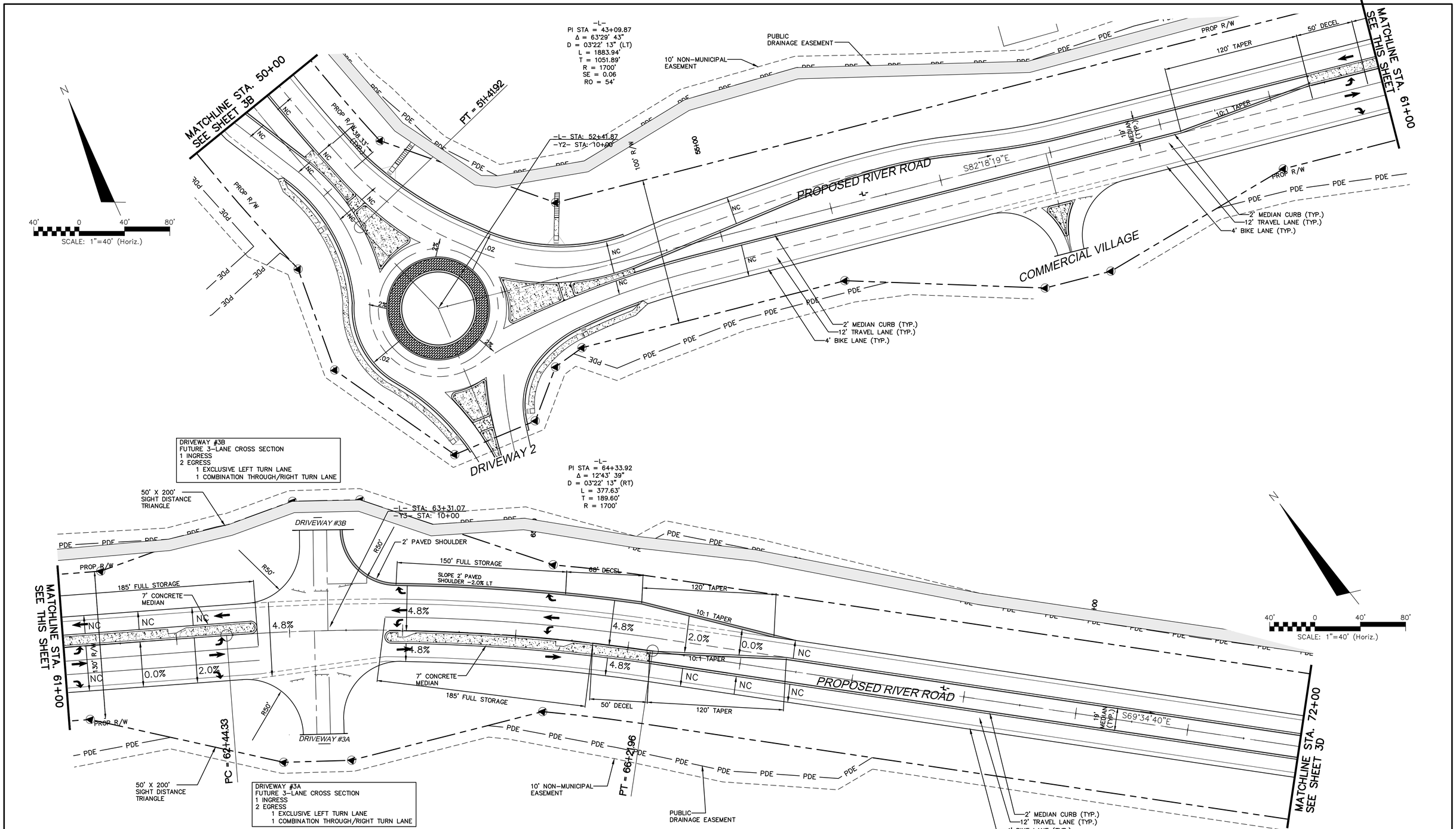

REV.NO.	DESCRIPTIONS	DATE
	REVISIONS	

SEAL

SEAL 022574 ENGINEER RICHARD MICHAEL CULLER 10/03/2014

McKIM&CREED
243 North Front Street
Wilmington, North Carolina 28401
Phone: (910)343-1048 , Fax: (910)251-8282
License: F-1222
www.mckimcreed.com

Newland COMMUNITIES

NASH North America Scenic House, LLC

RIVER ROAD

GEOMETRY PLANS
PROPOSED RIVER ROAD
STA 50+00 TO STA 72+00

DATE:	SEPTEMBER 2014
MCE PROJ. #	2735-0007
DRAWN	
DESIGNED	
CHECKED	RMC
PROJ. MGR.	RMC

SCALE
HORIZONTAL: 1"=40'
VERTICAL: N/A

M&C FILE NUMBER: CR-103
DRAWING NUMBER: 3C

STATUS: FINAL DESIGN PLANS
REVISION

S:\2735\0007\90-Drawings\CR103-027350007.dwg, 10/3/2014 11:49:59 AM, nlaurietta, ANSI D (22.00 x 34.00 Inches), 1:1

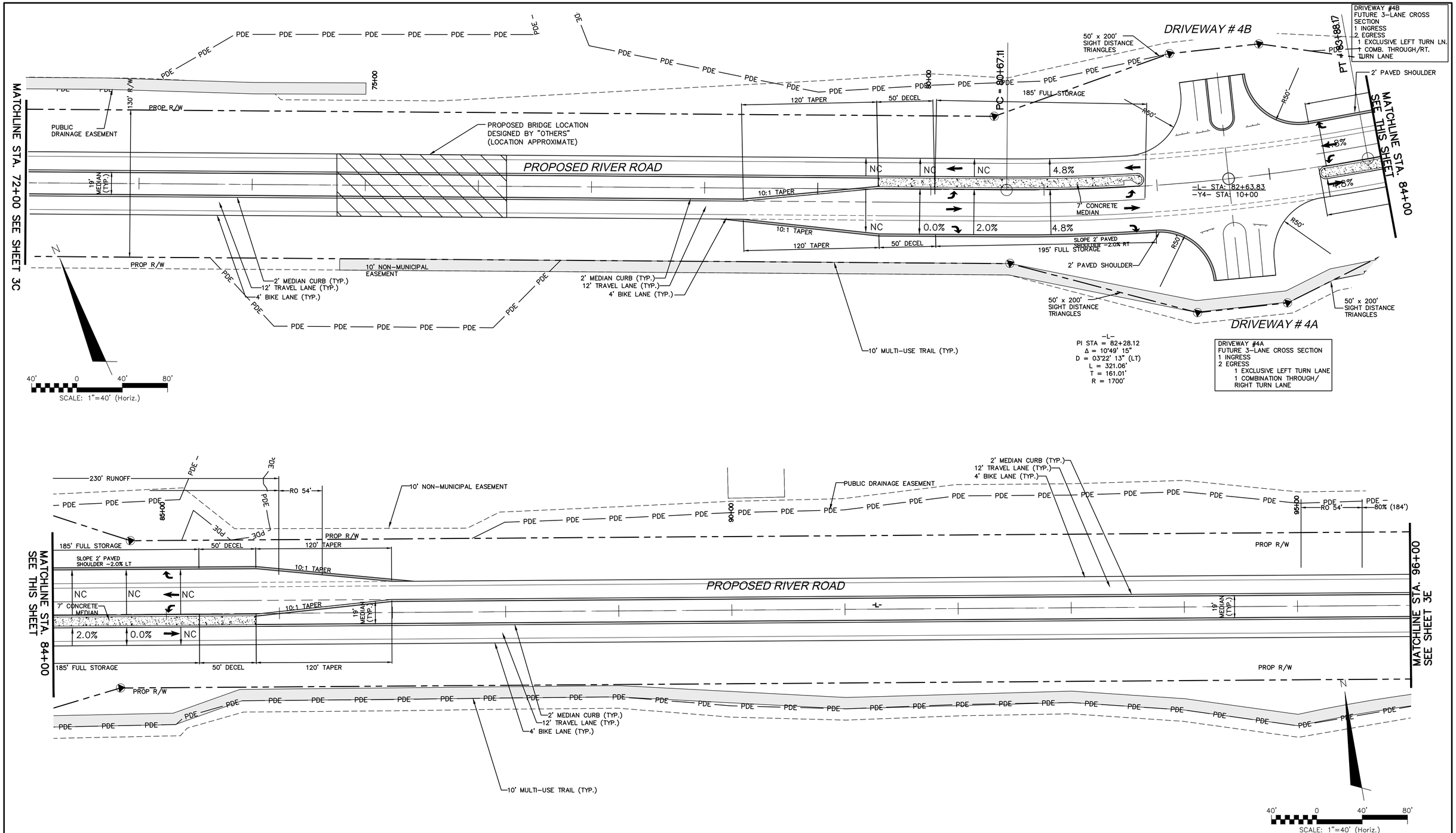

REV.NO.	DESCRIPTIONS	DATE
	REVISIONS	

SEAL

NORTH CAROLINA PROFESSIONAL SEAL 022574 ENGINEER RICHARD MICHAEL COLLER
10/03/2014

McKIM&CREED
243 North Front Street
Wilmington, North Carolina 28401
Phone: (910)343-1048 , Fax: (910)251-8282
License: F-1222
www.mckimcreed.com

Newland® COMMUNITIES

NASH North America Serious House, LLC

RIVER ROAD

GEOMETRY PLANS
PROPOSED RIVER ROAD
STA 72+00 TO STA 96+00

DATE:	SEPTEMBER 2014
MCE PROJ. #	2735-0007
DRAWN	
DESIGNED	
CHECKED	RMC
PROJ. MGR.	RMC

SCALE
HORIZONTAL: 1"=40'
VERTICAL: N/A

M&C FILE NUMBER CR-104
DRAWING NUMBER 3D

STATUS: FINAL DESIGN PLANS
REVISION

S:\2735\0007\80-Drawings\CR104-027350007.dwg, 10/3/2014 11:50:42 AM, nilaaretta, ANSI D (22.00 x 34.00 Inches), 1:1

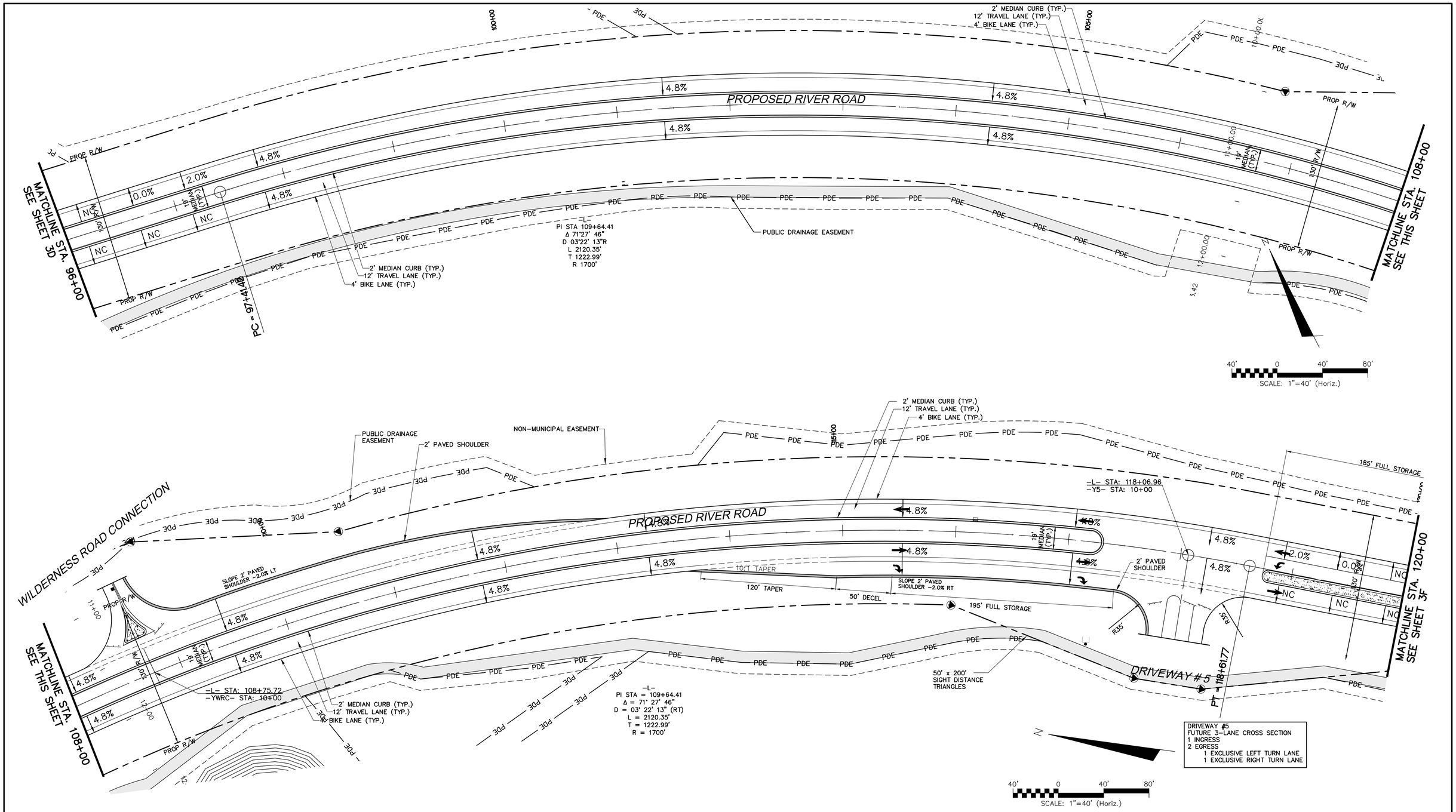

REV.NO.	DESCRIPTIONS	DATE
	REVISIONS	

SEAL

SEAL 022574 ENGINEER NORTH CAROLINA
10/03/2014

McKIM&CREED
243 North Front Street
Wilmington, North Carolina 28401
Phone: (910)343-1048 , Fax: (910)251-8282
License: F-1222
www.mckimcreed.com

Newland COMMUNITIES

NASH North America Scottish House, LLC

RIVER ROAD

GEOMETRY PLANS
PROPOSED RIVER ROAD
STA 96+00 TO STA 120+00

DATE:	SEPTEMBER 2014
MCE PROJ. #	2735-0007
DRAWN	
DESIGNED	
CHECKED	RMC
PROJ. MGR.	RMC

SCALE
HORIZONTAL: 1"=40'
VERTICAL: N/A

M&C FILE NUMBER: CR-105
DRAWING NUMBER: 3E

STATUS: FINAL DESIGN PLANS
REVISION

S:\2735\0007\90-Drawings\CR105-027350007.dwg, 10/3/2014 11:51:29 AM, nilaurietta,
ANSI D (22.00 x 34.00 Inches), 1:1

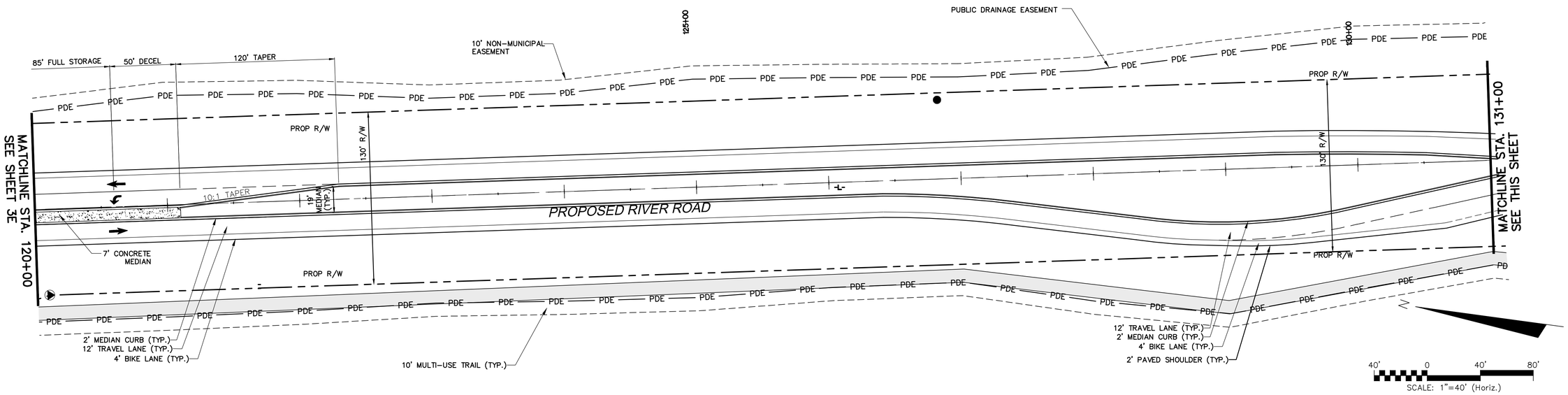

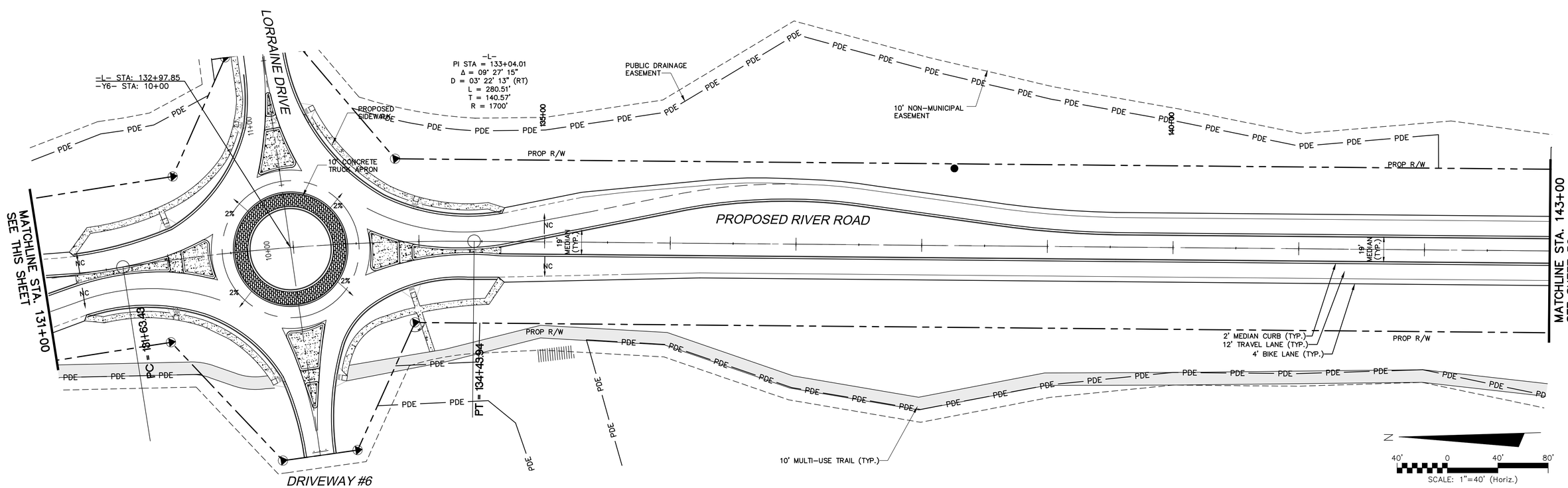

REV.NO.	DESCRIPTIONS	DATE

REVISIONS

SEAL

SEAL 022574 ENGINEER NORTH CAROLINA 10/03/2014

McKIM&CREED
243 North Front Street
Wilmington, North Carolina 28401
Phone: (910)343-1048 , Fax: (910)251-8282
License: F-1222
www.mckimcreed.com

Newland COMMUNITIES

NASH North America Service House, LLC

RIVER ROAD

GEOMETRY PLANS
PROPOSED RIVER ROAD
STA 120+00 TO STA 143+00

DATE:	SEPTEMBER 2014
MCE PROJ. #	2735-0007
DRAWN	
DESIGNED	
CHECKED	RMC
PROJ. MGR.	RMC

SCALE
HORIZONTAL: 1"=40'
VERTICAL: N/A

M&C FILE NUMBER: CR-106
DRAWING NUMBER: 3F

STATUS: FINAL DESIGN PLANS
REVISION

S:\2735\000790-Drawings\CR106-027350007.dwg, 10/3/2014 11:52:14 AM, nlaurietta,
ANSI D (22.00 x 34.00 Inches), 1:1

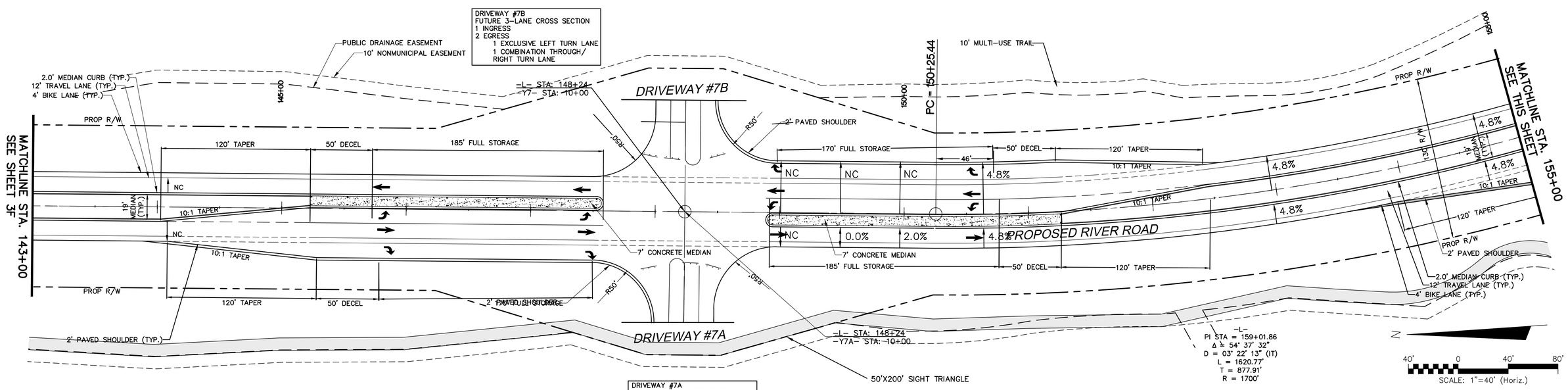

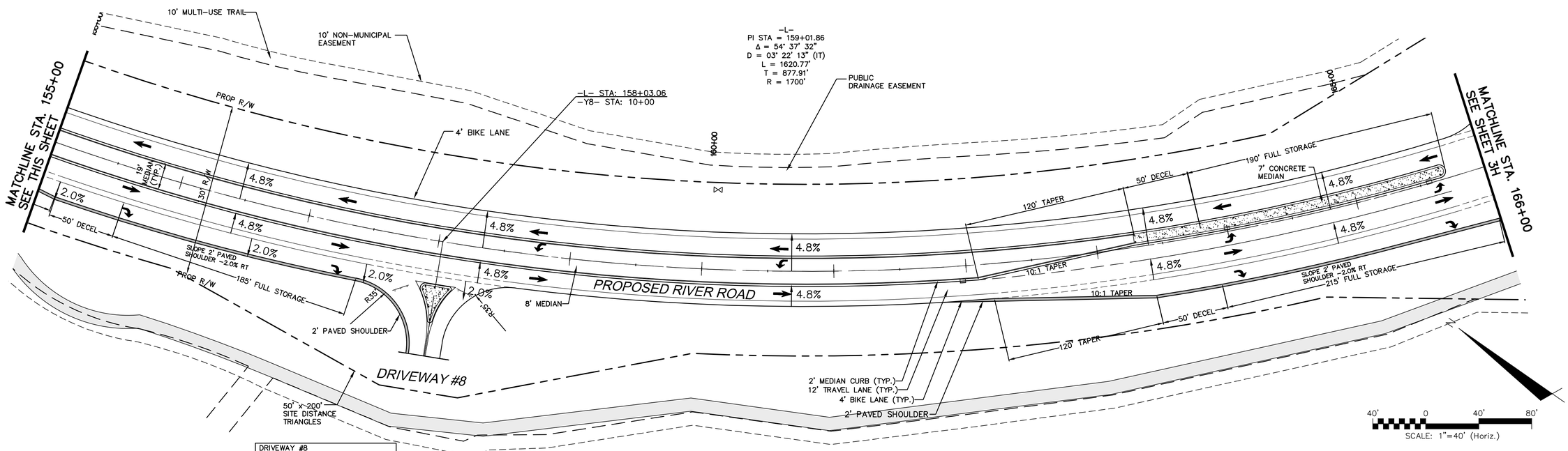

DRIVEWAY #8
FUTURE 3-LANE CROSS SECTION
1 INGRESS
2 EGRESS
1 EXCLUSIVE LEFT TURN LANE
1 EXCLUSIVE RIGHT TURN LANE

REV.NO.	DESCRIPTIONS	DATE

REVISIONS

SEAL

SEAL 022574 ENGINEER NORTH CAROLINA
10/03/2014

McKIM&CREED
243 North Front Street
Wilmington, North Carolina 28401
Phone: (910)343-1048 , Fax: (910)251-8282
License: F-1222
www.mckimcreed.com

Newland® COMMUNITIES

NORTH AMERICA SCENIC HOUSE, LLC

RIVER ROAD

GEOMETRY PLANS
PROPOSED RIVER ROAD
STA 143+00 TO STA 166+00

DATE:	SEPTEMBER 2014
MCE PROJ. #	2735-0007
DRAWN	
DESIGNED	
CHECKED	RMC
PROJ. MGR.	RMC

SCALE
HORIZONTAL: 1"=40'
VERTICAL: N/A

M&C FILE NUMBER CR-107
DRAWING NUMBER 3G

STATUS: FINAL DESIGN PLANS
REVISION

S:\2735\0007\80-Drawings\CR107-027350007.dwg, 10/3/2014 11:53:01 AM, nlaurenta,
ANSI D (22.00 x 34.00 Inches), 1:1

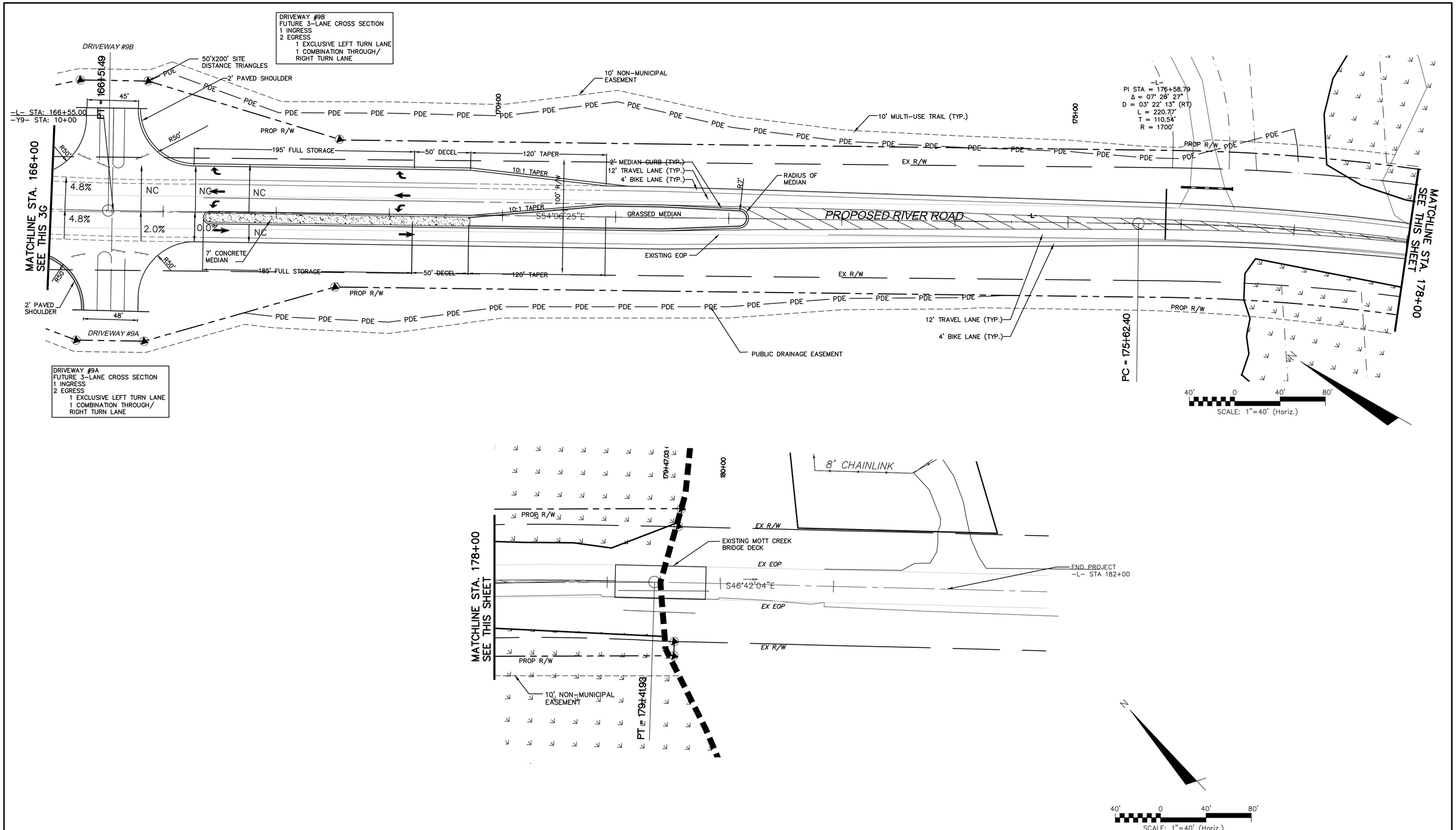

REV.NO.	DESCRIPTIONS	DATE

REVISIONS

SEAL

SEAL 022574 ENGINEER RICHARD MICHAEL COLLER
10/03/2014

McKIM&CREED
243 North Front Street
Wilmington, North Carolina 28401
Phone: (910)343-1048 , Fax: (910)251-8282
License: F-1222
www.mckimcreed.com

Newland® COMMUNITIES

NAH North America Seersucker House, LLC

RIVER ROAD

ROADWAY GEOMETRY PLANS
PROPOSED RIVER ROAD
STA 166+00 – STA 182+00

DATE:	SEPTEMBER 2014
MCE PROJ. #	2735-0007
DRAWN	
DESIGNED	
CHECKED	RMC
PROJ. MGR.	RMC

SCALE
HORIZONTAL: 1"=40'
VERTICAL: N/A

M&C FILE NUMBER CR-108
DRAWING NUMBER 3H

STATUS: FINAL DESIGN PLANS
REVISION

S:\2735\0007\90-Drawings\CR108-027350007.dwg, 10/3/2014 11:53:51 AM, nilarretta,
ANSI D (22.00 x 34.00 Inches), 1:1

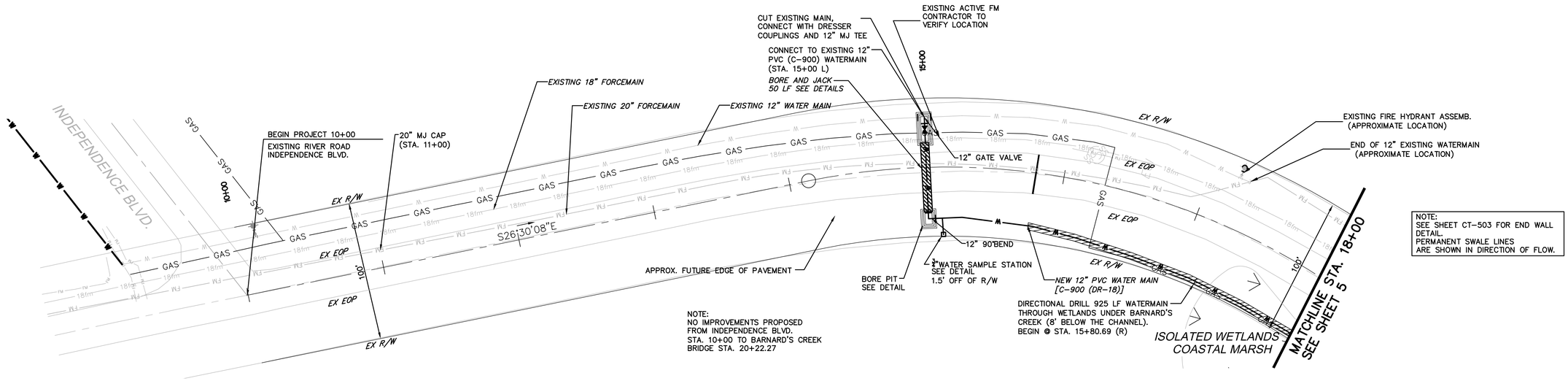

NOTE:
NO IMPROVEMENTS PROPOSED
FROM INDEPENDENCE BLVD.
STA. 10+00 TO BARNARD'S CREEK
BRIDGE STA. 20+22.27

NOTE:
SEE SHEET CT-503 FOR END WALL
DETAIL.
PERMANENT SWALE LINES
ARE SHOWN IN DIRECTION OF FLOW.

EXISTING RIVER ROAD

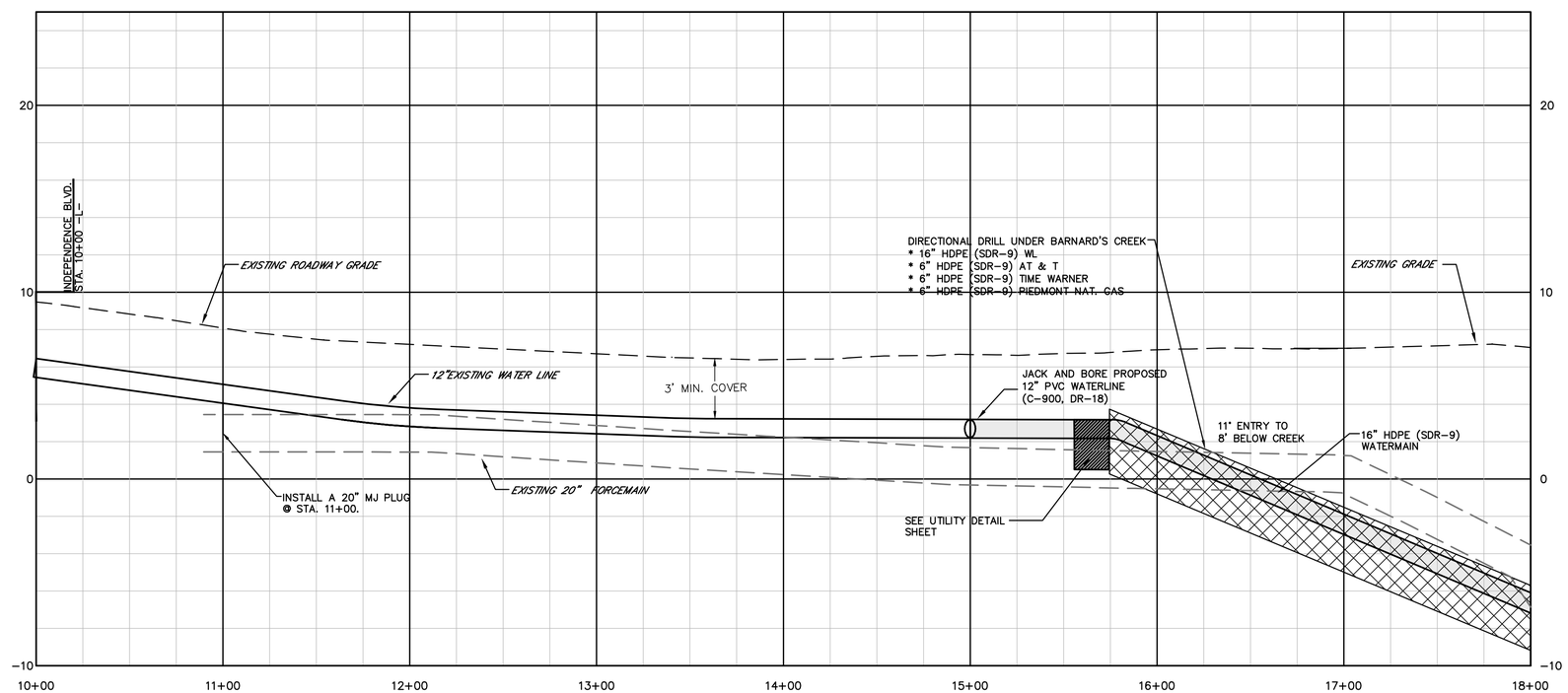

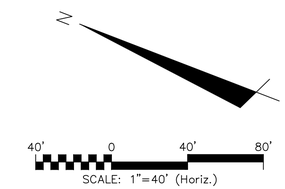

NOTE:
SEE SHEETS
3A TO 3H ROADWAY GEOMETRY
PLANS
PM-1 TO PM-8 PAVEMENT MARKINGS,
MARKERS AND SIGNING

ISSUED FOR PERMITTING
NOT FOR CONSTRUCTION

EXISTING RIVER ROAD

REV.NO.	DESCRIPTIONS	DATE
	REVISIONS	

SEAL

SEAL 022574 ENGINEER RICHARD MICHAEL COLLIER 10/03/2014

McKIM&CREED
243 North Front Street
Wilmington, North Carolina 28401
Phone: (910)343-1048 , Fax: (910)251-8282
License: F-1222
www.mckimcreed.com

Newland COMMUNITIES

NASH North America Scissor House, LLC

RIVER ROAD

ROADWAY PLAN & PROFILE
RIVER ROAD
STA 11+00 – STA 18+00

DATE: SEPTEMBER 2014
MCE PROJ. # 2735-0007
DRAWN
DESIGNED
CHECKED RMC
PROJ. MGR. RMC

SCALE
HORIZONTAL: 1"=40'
VERTICAL: 1"=4'

M&C FILE NUMBER CU-700
DRAWING NUMBER 4

STATUS: FINAL DESIGN PLANS
REVISION

S:\2735\0007\80-Drawings\CU700-027350007.dwg, 10/3/2014 11:54:53 AM, nlauretta,
ANSI D (22.00 x 34.00 Inches), 1:1

ISSUED FOR PERMITTING
NOT FOR CONSTRUCTION

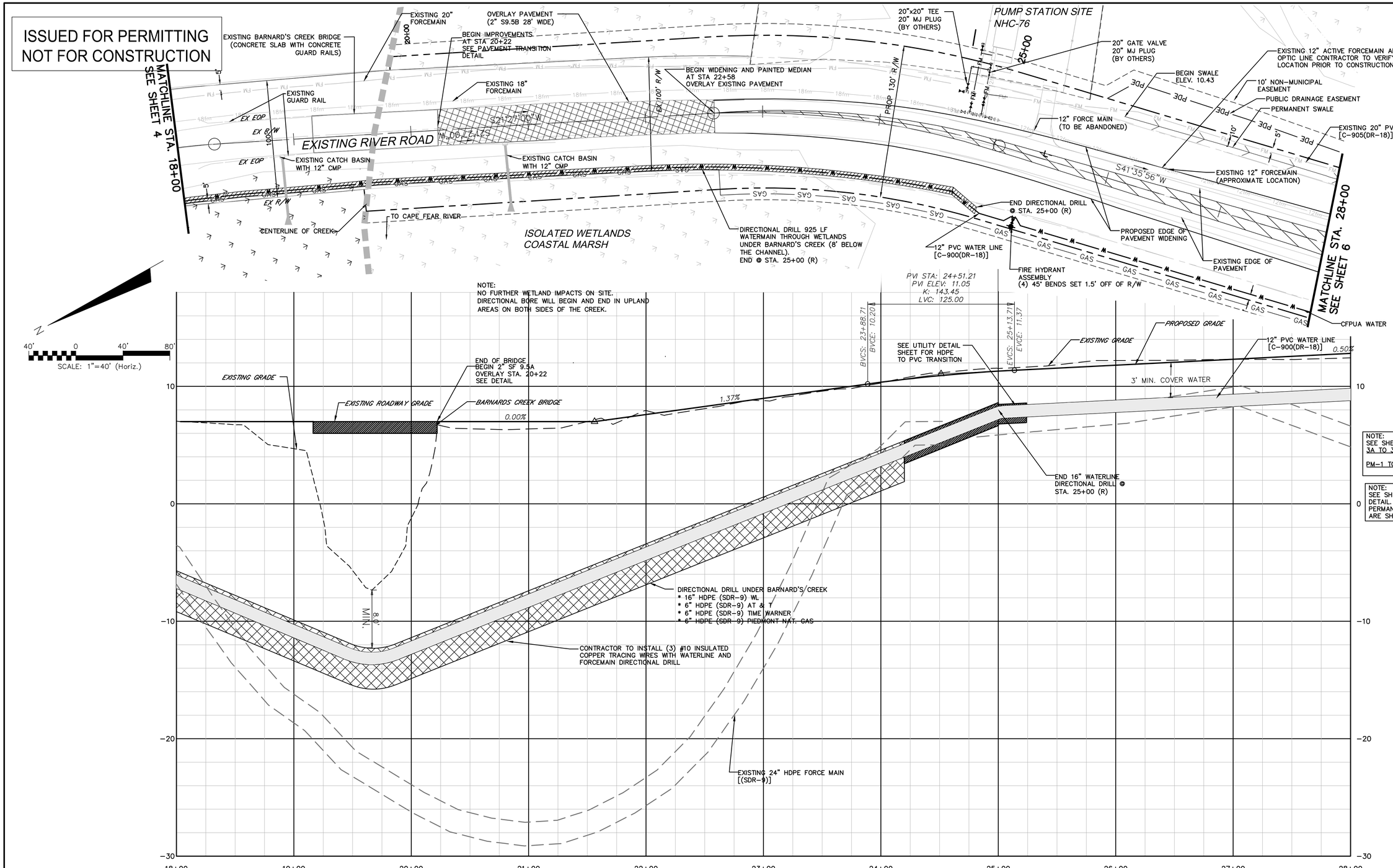

NOTE:
SEE SHEETS
3A TO 3H ROADWAY GEOMETRY PLANS
PM-1 TO PM-8 PAVEMENT MARKINGS, MARKERS AND SIGNING

NOTE:
SEE SHEET CT-503 FOR END WALL DETAIL.
PERMANENT SWALE LINES ARE SHOWN IN DIRECTION OF FLOW.

REV.NO.	DESCRIPTIONS	DATE
	REVISIONS	

SEAL

SEAL 022574 ENGINEER RICHARD MICHAEL MILLER 10/03/2014

McKIM&CREED
243 North Front Street
Wilmington, North Carolina 28401
Phone: (910)343-1048 , Fax: (910)251-8282
License: F-1222
www.mckimcreed.com

Newland® COMMUNITIES

NAH North America Sewage House, LLC

RIVER ROAD

ROADWAY PLAN & PROFILE
RIVER ROAD
STA 18+00 – STA 28+00

DATE:	SEPTEMBER 2014
MCE PROJ. #	2735-0007
DRAWN	
DESIGNED	
CHECKED	RMC
PROJ. MGR.	RMC

SCALE
HORIZONTAL: 1"=40'
VERTICAL: 1"=4'

M&C FILE NUMBER CU-701
DRAWING NUMBER 5

STATUS: FINAL DESIGN PLANS
REVISION

S:\2735\0007\80-Drawings\CU701-027350007.dwg, 10/3/2014 11:56:09 AM, nilaaretta, ANSI D (22.00 x 34.00 Inches), 1:1

ISSUED FOR PERMITTING
NOT FOR CONSTRUCTION

PDE=PUBLIC DRAINAGE EASEMENT

NOTE:
SEE SHEET CT-503 FOR END WALL DETAIL.
PERMANENT SWALE LINES ARE SHOWN IN DIRECTION OF FLOW.

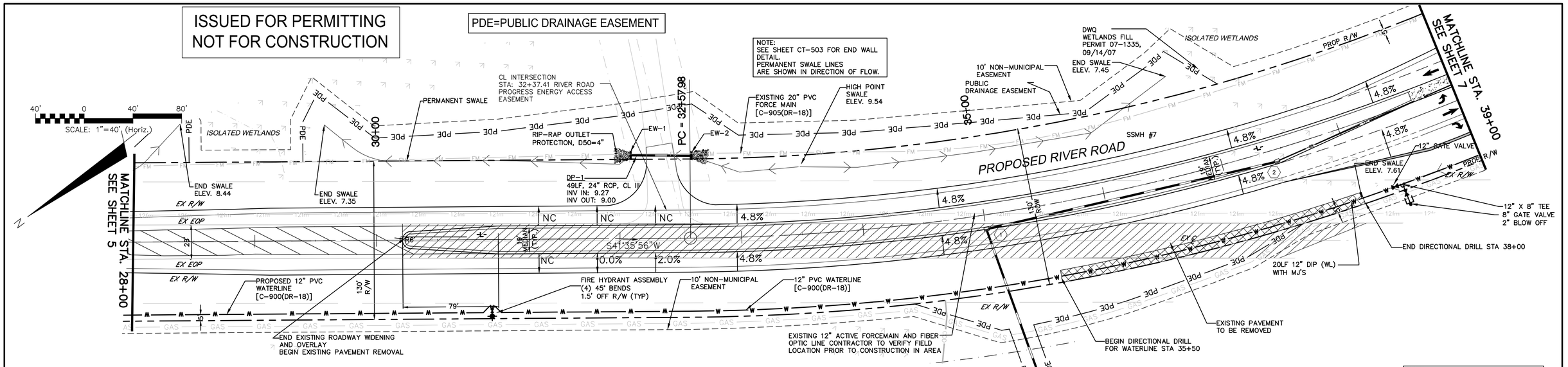

NOTE:
SEE SHEETS
3A TO 3H ROADWAY GEOMETRY PLANS
PM-1 TO PM-8 PAVEMENT MARKINGS, MARKERS AND SIGNING

LOCATION		RUNOFF								PIPE DESIGN						UPSTREAM	INLET	UPSTREAM
FROM	TO		CUM.		PIPE L	INLET	FLOW	DESIGN	INT	DISCH.	INV IN	INV OUT	SLOPE	DIA	MAT.	CAP.	RIM	SPREAD	NCDOT
		D.A.(AC.)	D.A.(AC.)	CA	(FT)	TIME	TIME	TIME	I(IN/HR)	Q (CFS)	(FT.)	(FT.)	(FT/FT)	(IN)		(CFS)	ELEV.	(FT)	STD. #
3	2	0.15	0.15	0.124	199	5.00	5.00	10.00	7.13	0.886	7.78	6.79	0.00500	18	C	13	11.03	3.68	840.17
2	1	0.34	0.48	0.409	243	5.00	5.45	10.45	7.04	2.882	6.79	5.57	0.00500	18	C	13	10.61	1.77	840.01
1	EW-3	0.11	0.59	0.499	274	5.00	6.00	11.00	6.94	3.465	5.57	4.00	0.00573	18	C	13	12.16	2.44	840.01

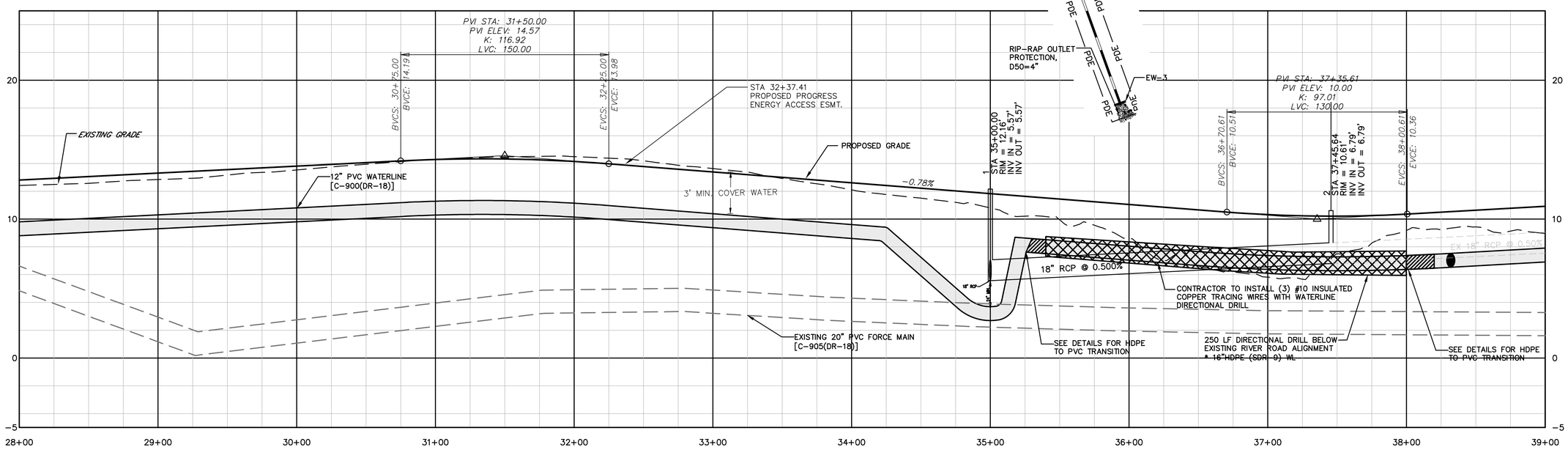

REV.NO.	DESCRIPTIONS	DATE
	REVISIONS	

SEAL

SEAL 022574 PROFESSIONAL ENGINEER RICHARD M. COLLER 10/03/2014

McKIM&CREED
243 North Front Street
Wilmington, North Carolina 28401
Phone: (910)343-1048 , Fax: (910)251-8282
License: F-1222
www.mckimcreed.com

Newland® COMMUNITIES

NASH North America Scottish House, LLC

RIVER ROAD

ROADWAY PLAN & PROFILE
RIVER ROAD
STA 28+00 – STA 39+00

DATE:	SEPTEMBER 2014
MCE PROJ. #	2735-0007
DRAWN	
DESIGNED	
CHECKED	RMC
PROJ. MGR.	RMC

SCALE
HORIZONTAL: 1"=40'
VERTICAL: 1"=4'

M&C FILE NUMBER CU-702
DRAWING NUMBER 6

STATUS: FINAL DESIGN PLANS
REVISION

S:\2735\0007\80-Drawings\CU702-027350007.dwg, 10/3/2014 11:57:42 AM, nilsaretta,
ANSI D (22.00 x 34.00 Inches), 1:1

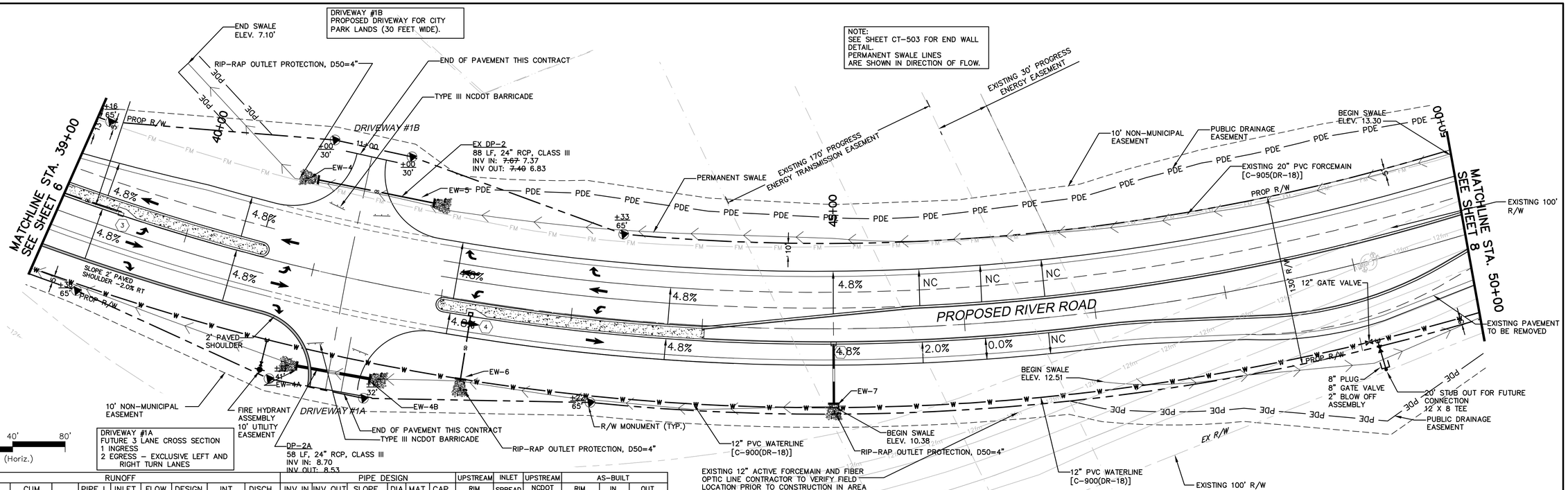

LOCATION		RUNOFF									PIPE DESIGN						UPSTREAM	INLET	UPSTREAM	AS-BUILT		
FROM	TO		CUM.		PIPE L	INLET	FLOW	DESIGN	INT	DISCH.	INV IN	INV OUT	SLOPE	DIA.	MAT.	CAP.	RIM	SPREAD	NCDOT	RIM	IN	OUT
		D.A.(AC.)	D.A.(AC.)	CA	(FT)	TIME	TIME	TIME	I(IN/HR)	Q (CFS)	(FT.)	(FT.)	(FT/FT)	(IN)		(CFS)	ELEV.	(FT)	STD. #			
3	2	0.15	0.15	0.124	199	5.00	5.00	10.00	7.13	0.886	7.78	6.79	0.00500	18	C	13	11.03	3.68	840.17		7.81	5.79
4	EW-6	0.19	0.19	0.162	46	5.00	5.00	10.00	7.13	1.151	9.98	9.75	0.00505	18	C	13	13.23	2.82	840.01	11.93	10.16	9.64
5	EW-7	0.07	0.07	0.060	45	5.00	5.00	10.00	7.13	0.424	11.09	10.87	0.00505	18	C	13	14.34	2.28	840.01			

NOTE:
SEE SHEETS
3A TO 3H ROADWAY GEOMETRY PLANS
PM-1 TO PM-8 PAVEMENT MARKINGS, MARKERS AND SIGNING

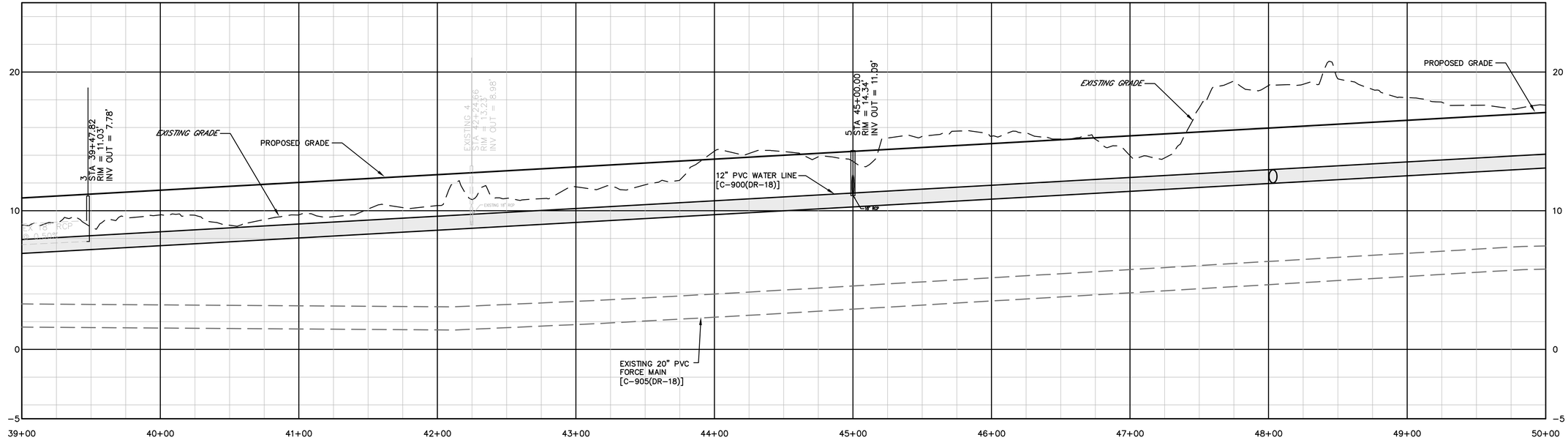

REV.NO.	DESCRIPTIONS	DATE
	REVISIONS	

SEAL

SEAL 022574 ENGINEER RICHARD MICHAEL COLLIER 10/03/2014

McKIM&CREED
243 North Front Street
Wilmington, North Carolina 28401
Phone: (910)343-1048 , Fax: (910)251-8282
License: F-1222
www.mckimcreed.com

Newland® COMMUNITIES

NORTH AMERICA SERVICE HOUSE, LLC

RIVER ROAD

ROADWAY PLAN & PROFILE
RIVER ROAD
STA 39+00 – STA 50+00

DATE: SEPTEMBER 2014
MCE PROJ. # 2735-0007
DRAWN
DESIGNED
CHECKED RMC
PROJ. MGR. RMC

SCALE
HORIZONTAL: 1"=40'
VERTICAL: 1"=4'

M&C FILE NUMBER CU-703
DRAWING NUMBER 7

STATUS: FINAL DESIGN PLANS
REVISION

S:\2735\0007\80-Drawings\CU703-027350007.dwg, 10/3/2014 11:59:12 AM, nilaaretta, ANSI D (22.00 x 34.00 Inches), 1:1

PDE=PUBLIC DRAINAGE EASEMENT

NOTE:
SEE SHEET CT-503 FOR END WALL DETAIL.
PERMANENT SWALE LINES ARE SHOWN IN DIRECTION OF FLOW.

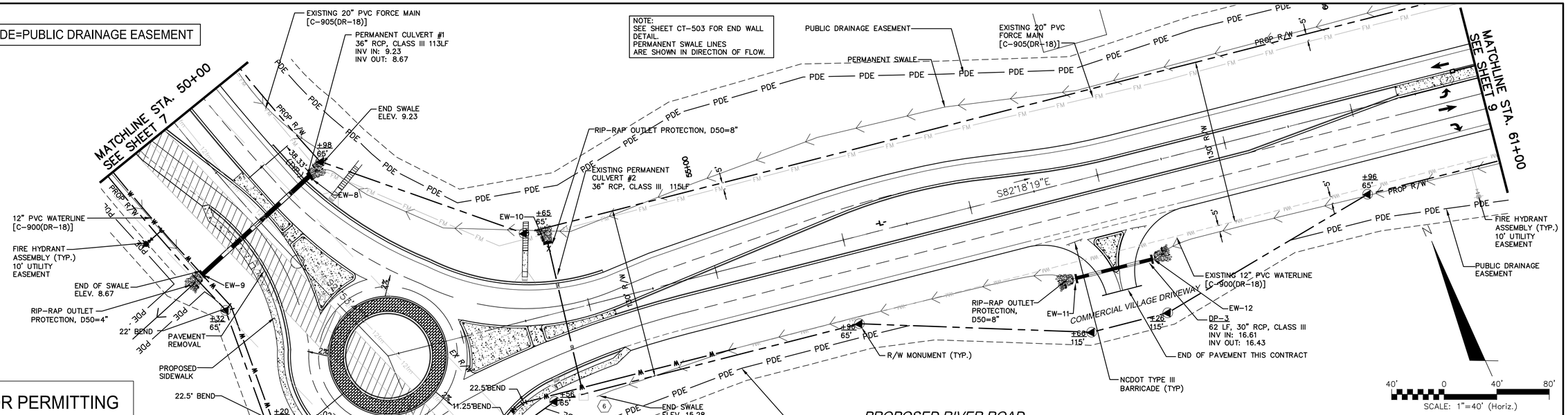

ISSUED FOR PERMITTING
NOT FOR CONSTRUCTION

NOTE:
SEE SHEETS
3A TO 3H ROADWAY GEOMETRY PLANS
PM-1 TO PM-8 PAVEMENT MARKINGS, MARKERS AND SIGNING

LOCATION		RUNOFF									PIPE DESIGN						UPSTREAM	INLET	UPSTREAM	AS-BUILT		
FROM	TO		CUM.		PIPE L	INLET	FLOW	DESIGN	INT	DISCH.	INV IN	INV OUT	SLOPE	DIA.	MAT.	CAP.	RIM	SPREAD	NCDOT	RIM	IN	OUT
		D.A.(AC.)	D.A.(AC.)	CA	(FT)	TIME	TIME	TIME	I(IN/HR)	Q (CFS)	(FT.)	(FT.)	(FT/FT)	(IN)		(CFS)	ELEV.	(FT)	STD. #			
6	EW-10	10.63	10.63	9.036	115	(SEE PERMANENT CULVERT CHARTS)				18.870	11.61	11.03	0.00504	36	C	64	15.28	10.92	840.19	BURIED	BURIED	11.47
7	8	0.08	0.08	0.067	111	5.00	5.00	10.00	7.13	0.476	20.45	19.89	0.00505	18	C	13	23.61	5.21	840.17	23.13	20.60	20.08

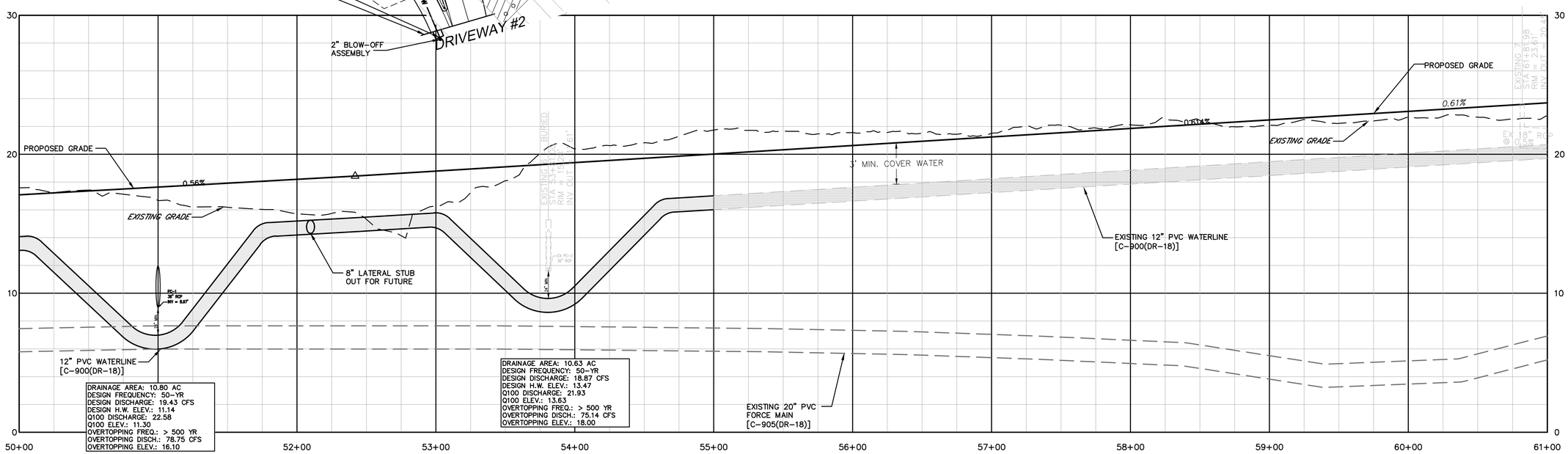

REV.NO.	DESCRIPTIONS	DATE
	REVISIONS	

SEAL

SEAL 022574 ENGINEER RICHARD MICHAEL CROLLER NORTH CAROLINA
10/03/2014

McKIM&CREED
243 North Front Street
Wilmington, North Carolina 28401
Phone: (910)343-1048 , Fax: (910)251-8282
License: F-1222
www.mckimcreed.com

Newland® COMMUNITIES

NAH North America Scenic House, LLC

RIVER ROAD

ROADWAY PLAN & PROFILE
RIVER ROAD
STA 50+00 – STA 61+00

DATE:	SEPTEMBER 2014
MCE PROJ. #	2735-0007
DRAWN	
DESIGNED	
CHECKED	RMC
PROJ. MGR.	RMC

SCALE
HORIZONTAL: 1"=40'
VERTICAL: 1"=4'

M&C FILE NUMBER CU-704
DRAWING NUMBER 8

STATUS: FINAL DESIGN PLANS
REVISION

S:\2735\0007\80-Drawings\CU704-027350007.dwg, 10/3/2014 12:00:21 PM, mlauretta,
ANSI D (22.00 x 34.00 Inches), 1:1

PDE=PUBLIC DRAINAGE EASEMENT

ISSUED FOR PERMITTING
NOT FOR CONSTRUCTION

NOTE:
SEE SHEET CT-503 FOR END WALL DETAIL.
PERMANENT SWALE LINES ARE SHOWN IN DIRECTION OF FLOW.

NOTE:
SEE SHEETS
3A TO 3H ROADWAY GEOMETRY PLANS
PM-1 TO PM-8 PAVEMENT MARKINGS, MARKERS AND SIGNING

DRIVEWAY #3B
FUTURE 3-LANE CROSS SECTION
1 INGRESS
2 EGRESS
1 EXCLUSIVE LEFT TURN LANE
1 COMBINATION THROUGH/RIGHT TURN LANE

DRIVEWAY #3A
FUTURE 3-LANE CROSS SECTION
1 INGRESS
2 EGRESS
1 EXCLUSIVE LEFT TURN LANE
1 COMBINATION THROUGH/RIGHT TURN LANE

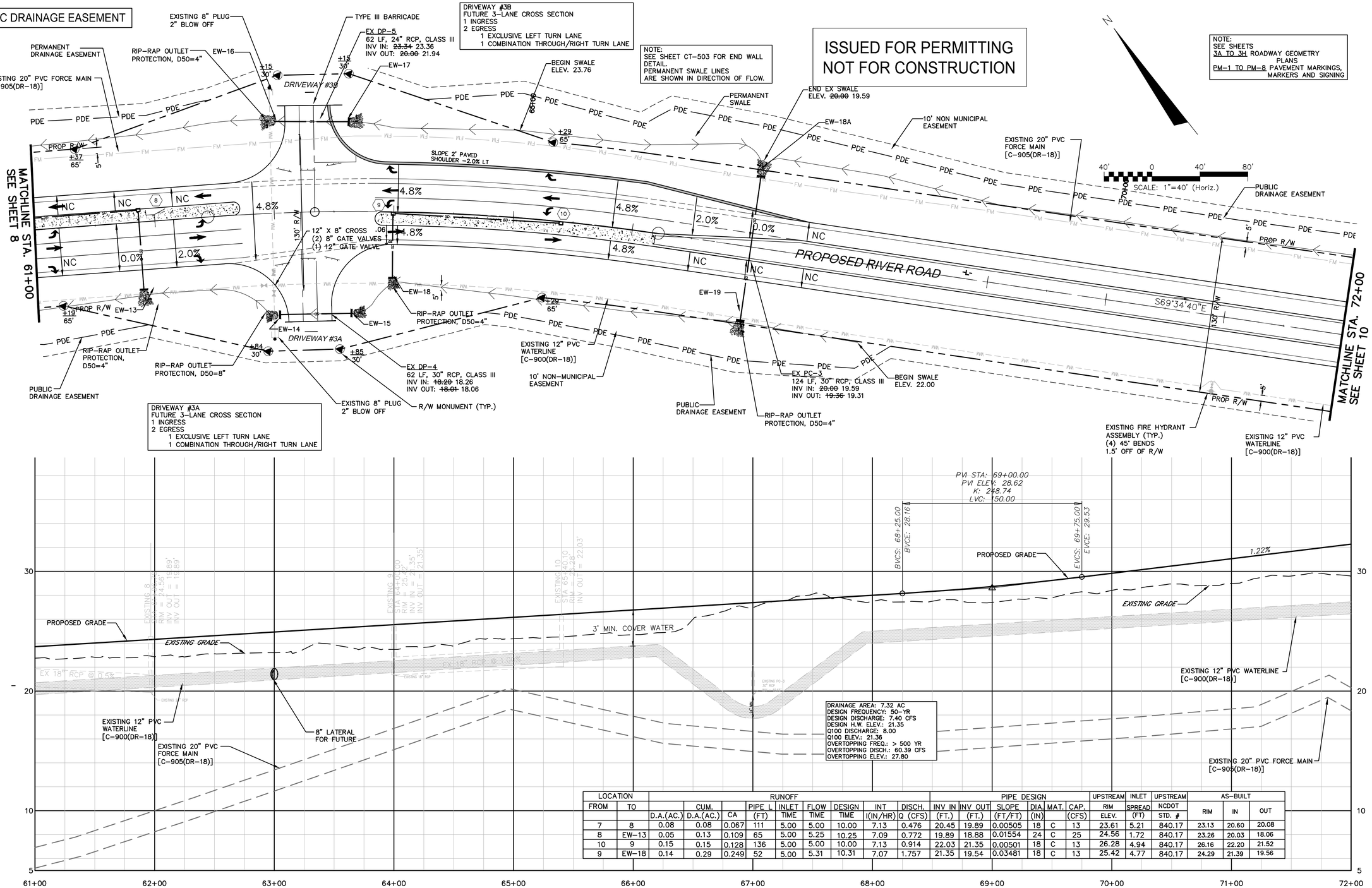

LOCATION		RUNOFF									PIPE DESIGN						UPSTREAM	INLET	UPSTREAM	AS-BUILT		
FROM	TO		CUM.		PIPE L	INLET	FLOW	DESIGN	INT	DISCH.	INV IN	INV OUT	SLOPE	DIA.	MAT.	CAP.	RIM	SPREAD	NCDOT	RIM	IN	OUT
		D.A.(AC.)	D.A.(AC.)	CA	(FT)	TIME	TIME	TIME	I(IN/HR)	Q (CFS)	(FT.)	(FT.)	(FT/FT)	(IN)		(CFS)	ELEV.	(FT)	STD. #			
7	8	0.08	0.08	0.067	111	5.00	5.00	10.00	7.13	0.476	20.45	19.89	0.00505	18	C	13	23.61	5.21	840.17	23.13	20.60	20.08
8	EW-13	0.05	0.13	0.109	65	5.00	5.25	10.25	7.09	0.772	19.89	18.88	0.01554	24	C	25	24.56	1.72	840.17	26.26	20.03	18.06
10	9	0.15	0.15	0.128	136	5.00	5.00	10.00	7.13	0.914	22.03	21.35	0.00501	18	C	13	26.28	4.94	840.17	26.16	22.20	21.52
9	EW-18	0.14	0.29	0.249	52	5.00	5.31	10.31	7.07	1.757	21.35	19.54	0.03481	18	C	13	25.42	4.77	840.17	24.29	21.39	19.56

REV.NO.	DESCRIPTIONS	DATE
	REVISIONS	

SEAL

SEAL 022574 NORTH CAROLINA PROFESSIONAL ENGINEER
10/03/2014

McKIM&CREED
243 North Front Street
Wilmington, North Carolina 28401
Phone: (910)343-1048 , Fax: (910)251-8282
License: F-1222
www.mckimcreed.com

Newland COMMUNITIES

NASH NORTH AMERICA SCANDIA HOUSE, LLC

RIVER ROAD

ROADWAY PLAN & PROFILE
RIVER ROAD
STA 61+00 – STA 72+00

DATE: SEPTEMBER 2014
MCE PROJ. # 2735-0007
DRAWN
DESIGNED
CHECKED RMC
PROJ. MGR. RMC

SCALE
HORIZONTAL: 1"=40'
VERTICAL: 1"=4'

M&C FILE NUMBER CU-705
DRAWING NUMBER 9

STATUS: FINAL DESIGN PLANS
REVISION

S:\2735\000780-Drawings\CU705-027350007.dwg, 10/3/2014 12:54:42 PM, nlaurietta, ANSI D (22.00 x 34.00 Inches), 1:1

PDE=PUBLIC DRAINAGE EASEMENT

SCALE: 1"=40' (Horiz.)

MATCHLINE STA. 72+00 SEE SHEET 9

MATCHLINE STA. 84+00 SEE SHEET 11

DRIVEWAY #4B
FUTURE 3-LANE CROSS SECTION
1 INGRESS
2 EGRESS
1 INCL. LEFT TURN LN.
1 COMB. THROUGH/RT. TURN LANE

DRIVEWAY #4A
FUTURE 3-LANE CROSS SECTION
1 INGRESS
2 EGRESS
1 INCLUSIVE LEFT TURN LANE
1 COMBINATION THROUGH/ RIGHT TURN LANE

NORTH LAKE CONSTRUCTED UNDER MINING PERMIT ELEV. AT PERMANENT POOL = 17.00'

PROPOSED BRIDGE LOCATION DESIGNED BY "OTHERS" (LOCATION APPROXIMATE)

CONTRACTOR TO FIELD VERIFY THE BEGIN/END WATERLINE BORE LOCATIONS TO PROVIDE ADEQUATE CLEARANCE FROM PROPOSED LAKE ELEVATION/BRIDGE

PERM. POOL, EL.= 17

BOTTOM OF LAKE, EL.= 9

6' MIN. SEPERATION

3' MIN. COVER WATER

PVI STA: 73+50.00
PVI ELEV: 34.09
K: 209.98
LVC: 150.00

PVI STA: 79+56.87
PVI ELEV: 37.15
K: 571.30
LVC: 750.00

S69°34'40"E

NOTE:
SEE SHEETS
3A TO 3H ROADWAY GEOMETRY PLANS
PM-1 TO PM-8 PAVEMENT MARKINGS, MARKERS AND SIGNING

NOTE:
SEE SHEET CT-503 FOR END WALL DETAIL.
PERMANENT SWALE LINES ARE SHOWN IN DIRECTION OF FLOW.

ISSUED FOR PERMITTING
NOT FOR CONSTRUCTION

LOCATION		RUNOFF									PIPE DESIGN						UPSTREAM	INLET	UPSTREAM	AS-BUILT		
FROM	TO		CUM.		PIPE L	INLET	FLOW	DESIGN	INT	DISCH.	INV IN	INV OUT	SLOPE	DIA.	MAT.	CAP.	RIM	SPREAD	BOX	RIM	IN	OUT
		D.A.(AC.)	D.A.(AC.)	CA	(FT)	TIME	TIME	TIME	I(IN/HR)	Q (CFS)	(FT.)	(FT.)	(FT/FT)	(IN)		(CFS)	ELEV.	(FT)	NCDOT STD.	ELEV.	ELEV.	ELEV.
11	EW-20	0.19	0.19	0.162	70	5.00	5.00	10.00	7.13	1.151	29.00	28.64	0.00512	18	C	13	33.93	8.92	840.01	33.83	30.52	28.61
12	EW-21	0.07	0.07	0.060	56	5.00	5.00	10.00	7.13	0.424	30.50	29.28	0.02191	18	C	13	33.96	2.63	840.17	33.83	30.52	28.13

REV.NO.	DESCRIPTIONS	DATE
	REVISIONS	

SEAL

McKIM&CREED
243 North Front Street
Wilmington, North Carolina 28401
Phone: (910)343-1048 , Fax: (910)251-8282
License: F-1222
www.mckimcreed.com

Newland COMMUNITIES

RIVER ROAD

ROADWAY PLAN & PROFILE
PROPOSED RIVER ROAD
STA 72+00 – STA 84+00

DATE: SEPTEMBER 2014
MCE PROJ. # 2735-0007
DRAWN
DESIGNED
CHECKED RMC
PROJ. MGR. RMC

SCALE
HORIZONTAL: 1"=40'
VERTICAL: 1"=4'

M&C FILE NUMBER CU-706
DRAWING NUMBER 10

STATUS: FINAL DESIGN PLANS
REVISION

S:\2735\0007\80-Drawings\CU706-027350007.dwg, 10/3/2014 12:04:10 PM, nilaaretta, ANSI D (22.00 x 34.00 Inches), 1:1

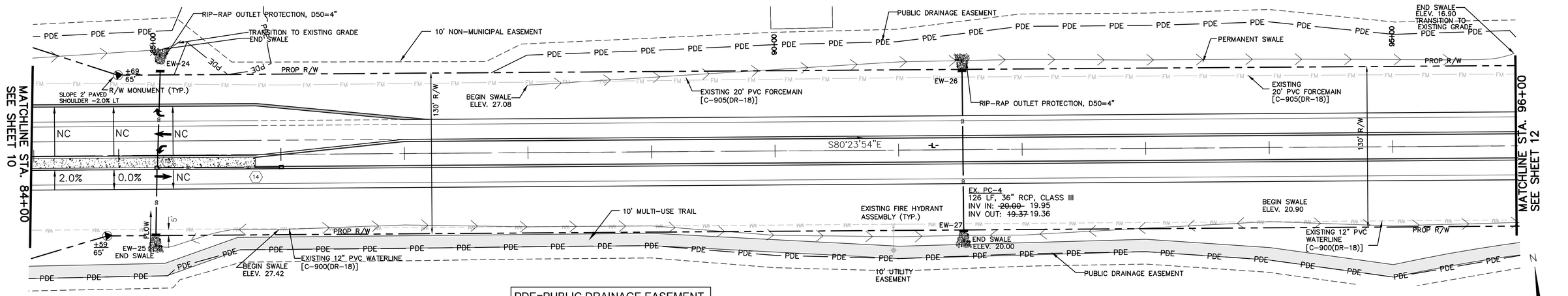

PDE=PUBLIC DRAINAGE EASEMENT

NOTE:
SEE SHEET CT-503 FOR END WALL DETAIL.
PERMANENT SWALE LINES ARE SHOWN IN DIRECTION OF FLOW.

LOCATION		RUNOFF									PIPE DESIGN						UPSTREAM INLET	INLET SPREAD	UPSTREAM BOX	AS-BUILT		
FROM	TO		CUM.		PIPE L	INLET	FLOW	DESIGN	INT	DISCH.	INV IN	INV OUT	SLOPE	DIA.	MAT.	CAP.				RIM	IN	OUT
		D.A.(AC.)	D.A.(AC.)	CA	(FT)	TIME	TIME	TIME	I(IN/HR)	Q (CFS)	(FT.)	(FT.)	(FT/FT)	(IN)		(CFS)	ELEV.	(FT)	NCDOT STD.	ELEV.	ELEV.	ELEV.
EW-25	13	0.46	0.46	0.391	69	5.00	5.00	10.00	7.13	2.788	26.00	25.65	0.00510	18	C	13	32.87	2.83	N/A		26.20	25.75
14	13	0.07	0.53	0.451	96	5.00	5.16	10.16	7.10	3.198	28.44	25.65	0.02899	18	C	13	31.69	0.00	840.01	30.64	27.74	25.85
13	EW-24	0.11	0.64	0.544	95	5.00	5.37	10.37	7.06	3.840	25.65	23.00	0.02783	18	C	13	32.87	2.83	840.01	32.46	25.73	23.08

ISSUED FOR PERMITTING
NOT FOR CONSTRUCTION

40' 0 40' 80'
SCALE: 1"=40' (Horiz.)

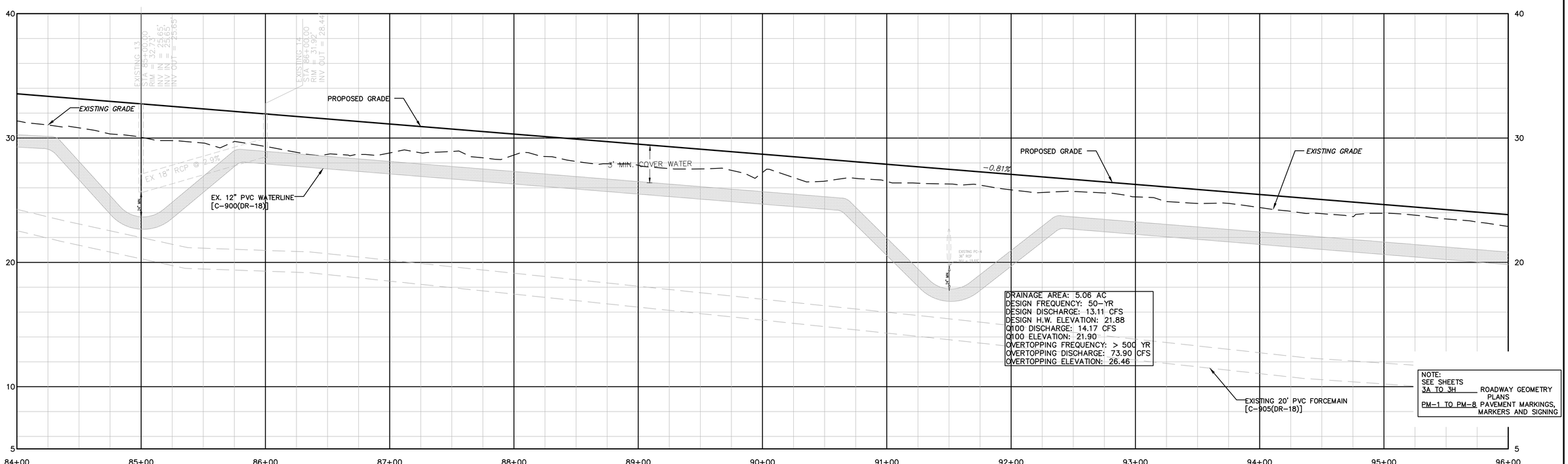

PROPOSED RIVER ROAD

REV.NO.	DESCRIPTIONS	DATE

REVISIONS

SEAL

SEAL 022574 ENGINEER NORTH CAROLINA RICHARD M. COLLIER 10/03/2014

McKIM&CREED
243 North Front Street
Wilmington, North Carolina 28401
Phone: (910)343-1048 , Fax: (910)251-8282
License: F-1222
www.mckimcreed.com

Newland COMMUNITIES

NASH North America Scholes House, LLC

RIVER ROAD

ROADWAY PLAN & PROFILE
PROPOSED RIVER ROAD
STA 84+00 – STA 96+00

DATE:	SEPTEMBER 2014
MCE PROJ. #	2735-0007
DRAWN	
DESIGNED	
CHECKED	RMC
PROJ. MGR.	RMC

SCALE
HORIZONTAL: 1"=40'
VERTICAL: 1"=4'

M&C FILE NUMBER CU-707
DRAWING NUMBER 11

STATUS: FINAL DESIGN PLANS REVISION

S:\2735\0007\90-Drawings\CU707-027350007.dwg, 10/3/2014 12:05:36 PM, nilarretta, ANSI D (22.00 x 34.00 Inches), 1:1

NOTE:
SEE SHEET CT-503 FOR END WALL DETAIL.
PERMANENT SWALE LINES ARE SHOWN IN DIRECTION OF FLOW.

PDE=PUBLIC DRAINAGE EASEMENT

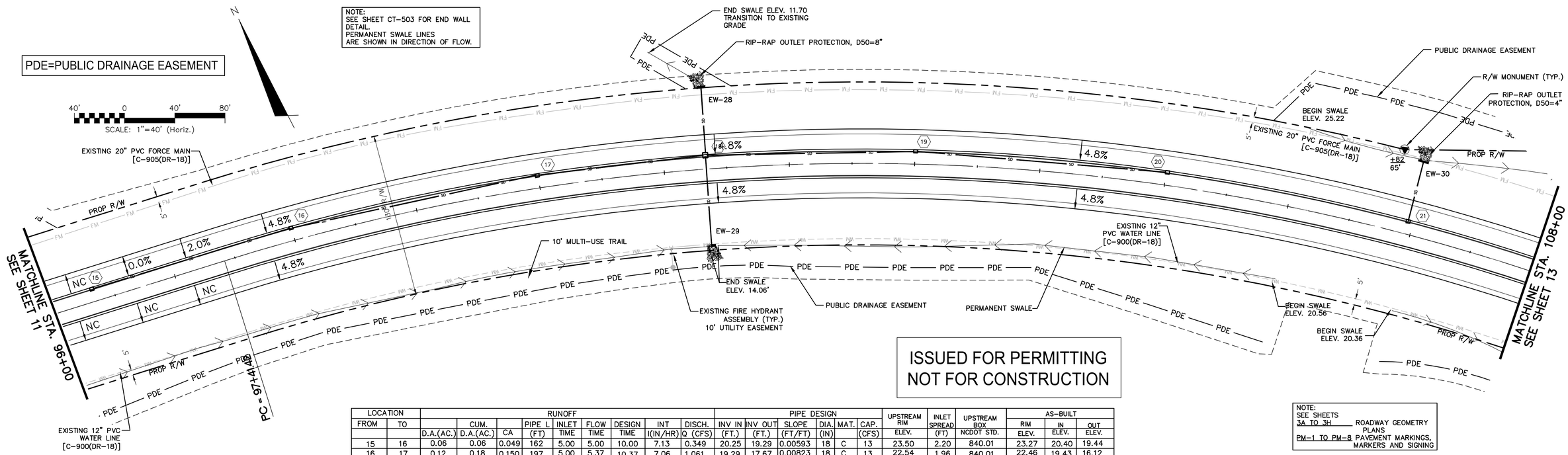

ISSUED FOR PERMITTING
NOT FOR CONSTRUCTION

LOCATION		RUNOFF									PIPE DESIGN							UPSTREAM RIM	INLET SPREAD	UPSTREAM BOX	AS-BUILT		
FROM	TO		CUM.		PIPE L	INLET	FLOW	DESIGN	INT	DISCH.	INV IN	INV OUT	SLOPE	DIA.	MAT.	CAP.				RIM	IN	OUT
		D.A.(AC.)	D.A.(AC.)	CA	(FT)	TIME	TIME	TIME	I(IN/HR)	Q (CFS)	(FT.)	(FT.)	(FT/FT)	(IN)		(CFS)	ELEV.	(FT)	NCDOT STD.	ELEV.	ELEV.	ELEV.
15	16	0.06	0.06	0.049	162	5.00	5.00	10.00	7.13	0.349	20.25	19.29	0.00593	18	C	13	23.50	2.20	840.01	23.27	20.40	19.44
16	17	0.12	0.18	0.150	197	5.00	5.37	10.37	7.06	1.061	19.29	17.67	0.00823	18	C	13	22.54	1.96	840.01	22.46	19.43	16.12
17	18	0.14	0.32	0.273	132	5.00	5.81	10.81	6.97	1.901	17.67	16.80	0.00657	18	C	13	20.92	2.17	840.01	20.02	16.09	15.44
20	19	0.14	0.14	0.119	198	5.00	5.00	10.00	7.13	0.848	21.16	18.21	0.01492	18	C	13	24.41	1.80	840.01	24.12	21.21	18.30
19	18	0.20	0.34	0.289	163	5.00	5.45	10.45	7.04	2.036	18.21	16.80	0.00866	18	C	13	21.46	1.86	840.01	21.22	18.26	15.36
EW-29	18	6.90	6.90	5.865	66	5.00	5.00	10.00	7.13	41.817	13.75	13.06	0.01045	30	C	43	21.20	2.62	N/A	N/A	13.81	12.88
18	EW-28	0.20	7.76	6.600	52	5.00	5.00	10.00	7.13	47.056	13.06	12.00	0.02038	42	C	90	21.20	2.62	840.01	18.64	12.87	11.78
21	EW-30	0.15	0.15	0.131	45	5.00	5.00	10.00	7.13	0.931	23.50	23.21	0.00640	18	C	13	27.31	1.96	840.01	26.95	23.51	22.94

NOTE:
SEE SHEETS
3A TO 3H ROADWAY GEOMETRY PLANS
PM-1 TO PM-8 PAVEMENT MARKINGS, MARKERS AND SIGNING

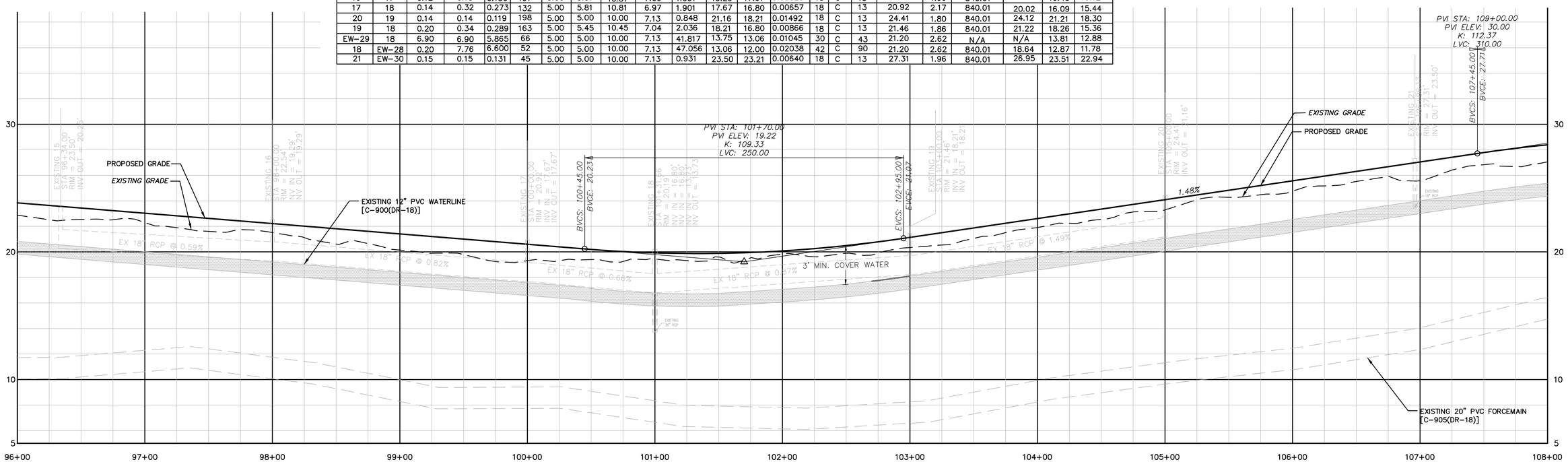

REV.NO.	DESCRIPTIONS	DATE
	REVISIONS	

SEAL

SEAL 022674 ENGINEER RICHARD MICHAEL CLIVER
10/03/2014

McKIM&CREED
243 North Front Street
Wilmington, North Carolina 28401
Phone: (910)343-1048 , Fax: (910)251-8282
License: F-1222
www.mckimcreed.com

Newland COMMUNITIES
NASH North America Scenic House, LLC

RIVER ROAD

ROADWAY PLAN & PROFILE
PROPOSED RIVER ROAD
STA 96+00 – STA 108+00

DATE:	SEPTEMBER 2014
MCE PROJ. #	2735-0007
DRAWN	
DESIGNED	
CHECKED	RMC
PROJ. MGR.	RMC

SCALE
HORIZONTAL: 1"=40'
VERTICAL: 1"=4'

M&C FILE NUMBER CU-708
DRAWING NUMBER 12

STATUS: FINAL DESIGN PLANS
REVISION

S:\2735\0007\80-Drawings\CU708-027350007.dwg, 10/3/2014 12:06:35 PM, nlaureta, ANSI D (22.00 x 34.00 Inches), 1:1

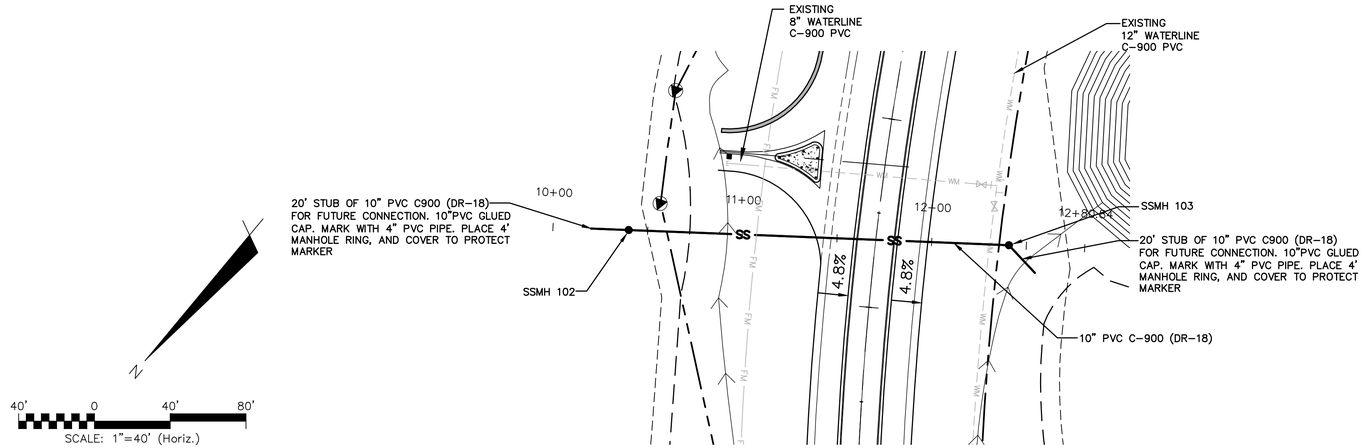

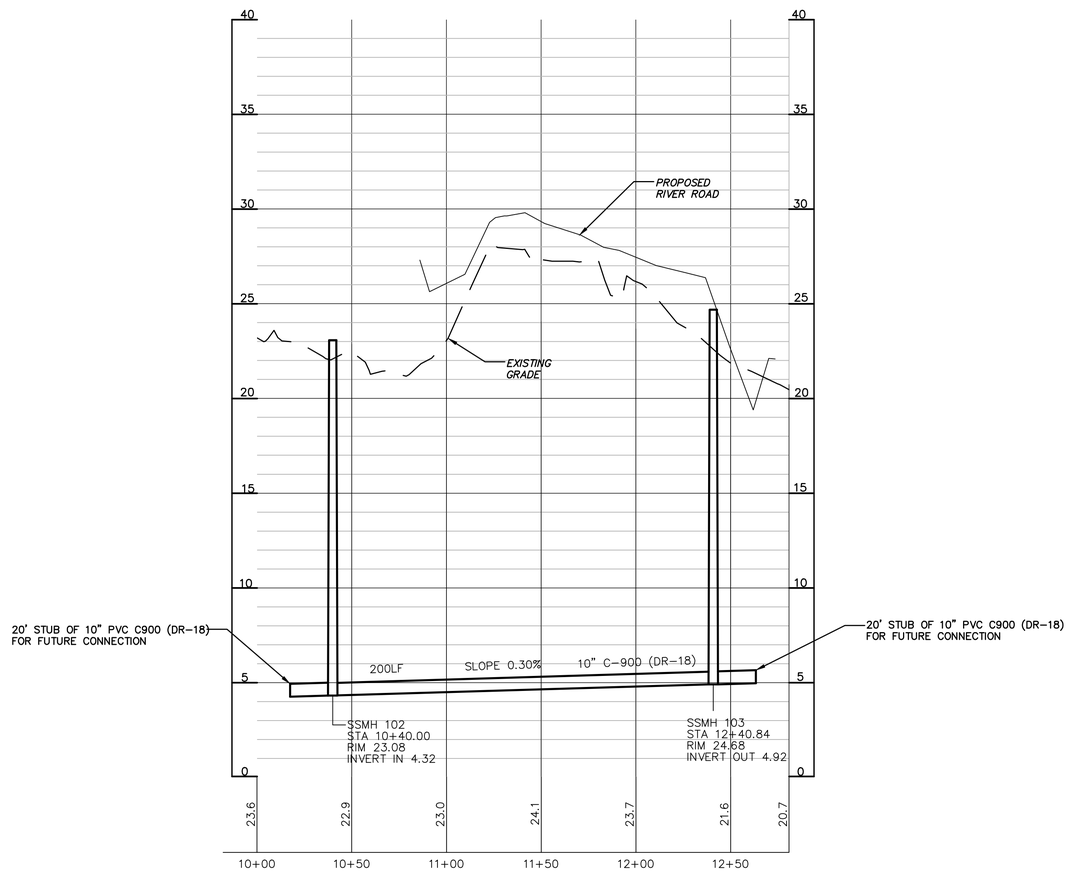

NOT FOR CONSTRUCTION

ISSUED FOR PERMITTING

REV.NO.	DESCRIPTIONS	DATE

REVISIONS

SEAL

SEAL 022574 ENGINEER RICHARD M. CHOLLER 10/03/2014

McKIM&CREED
243 North Front Street
Wilmington, North Carolina 28401
Phone: (910)343-1048 , Fax: (910)251-8282
License: F-1222
www.mckimcreed.com

Newland® COMMUNITIES

NORTH AMERICA SERVICE HOUSE, LLC

RIVER ROAD

SANITARY SEWER CROSSING
PLAN AND PROFILE

DATE:	SEPTEMBER 2014
MCE PROJ. #	2735-0007
DRAWN	
DESIGNED	
CHECKED	RMC
PROJ. MGR.	RMC

SCALE
HORIZONTAL: 1"=40'
VERTICAL: 1"=4'

M&C FILE NUMBER CU-708A
DRAWING NUMBER 12A

STATUS: FINAL DESIGN PLANS
REVISION

S:\2735\0007\90-Drawings\CU708A-02735\0007.dwg, 10/3/2014 12:07:31 PM, rilaureta,
ANSI D (22.00 x 34.00 Inches), 1:1

NOTE:
SEE SHEETS
3A TO 3H ROADWAY GEOMETRY PLANS
PM-1 TO PM-8 PAVEMENT MARKINGS, MARKERS AND SIGNING

NOTE:
SEE SHEET CT-503 FOR END WALL DETAIL.
PERMANENT SWALE LINES ARE SHOWN IN DIRECTION OF FLOW.

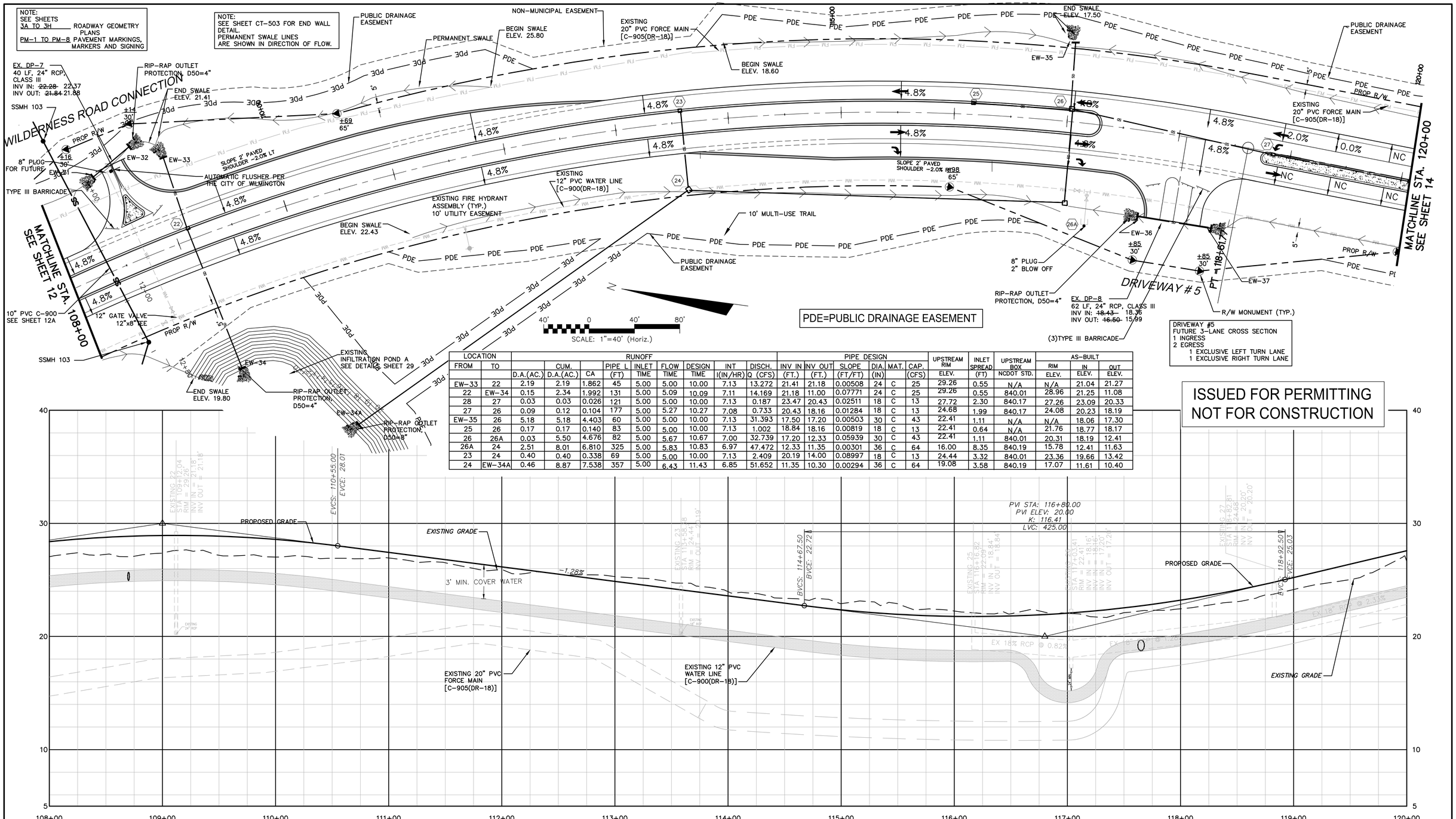

PDE=PUBLIC DRAINAGE EASEMENT

DRIVEWAY #5
FUTURE 3-LANE CROSS SECTION
1 INGRESS
2 EGRESS
1 EXCLUSIVE LEFT TURN LANE
1 EXCLUSIVE RIGHT TURN LANE

LOCATION		RUNOFF									PIPE DESIGN						UPSTREAM RIM	INLET SPREAD	UPSTREAM BOX	AS-BUILT		
FROM	TO		CUM.		PIPE L	INLET	FLOW	DESIGN	INT	DISCH.	INV IN	INV OUT	SLOPE	DIA.	MAT.	CAP.				RIM	IN	OUT
		D.A.(AC.)	D.A.(AC.)	CA	(FT)	TIME	TIME	TIME	I(IN/HR)	Q (CFS)	(FT.)	(FT.)	(FT/FT)	(IN)		(CFS)	ELEV.	(FT)	NCDOT STD.	ELEV.	ELEV.	ELEV.
EW-33	22	2.19	2.19	1.862	45	5.00	5.00	10.00	7.13	13.272	21.41	21.18	0.00508	24	C	25	29.26	0.55	N/A	N/A	21.04	21.27
22	EW-34	0.15	2.34	1.992	131	5.00	5.09	10.09	7.11	14.169	21.18	11.00	0.07771	24	C	25	29.26	0.55	840.01	28.96	21.25	11.08
28	27	0.03	0.03	0.026	121	5.00	5.00	10.00	7.13	0.187	23.47	20.43	0.02511	18	C	13	27.72	2.30	840.17	27.26	23.09	20.33
27	26	0.09	0.12	0.104	177	5.00	5.27	10.27	7.08	0.733	20.43	18.16	0.01284	18	C	13	24.68	1.99	840.17	24.08	20.23	18.19
EW-35	26	5.18	5.18	4.403	60	5.00	5.00	10.00	7.13	31.393	17.50	17.20	0.00503	30	C	43	22.41	1.11	N/A	N/A	18.06	17.30
25	26	0.17	0.17	0.140	83	5.00	5.00	10.00	7.13	1.002	18.84	18.16	0.00819	18	C	13	22.41	0.64	N/A	21.76	18.77	18.17
26	26A	0.03	5.50	4.676	82	5.00	5.67	10.67	7.00	32.739	17.20	12.33	0.05939	30	C	43	22.41	1.11	840.01	20.31	18.19	12.41
26A	24	2.51	8.01	6.810	325	5.00	5.83	10.83	6.97	47.472	12.33	11.35	0.00301	36	C	64	16.00	8.35	840.19	15.78	12.41	11.63
23	24	0.40	0.40	0.338	69	5.00	5.00	10.00	7.13	2.409	20.19	14.00	0.08997	18	C	13	24.44	3.32	840.01	23.36	19.66	13.42
24	EW-34A	0.46	8.87	7.538	357	5.00	6.43	11.43	6.85	51.652	11.35	10.30	0.00294	36	C	64	19.08	3.58	840.19	17.07	11.61	10.40

ISSUED FOR PERMITTING
NOT FOR CONSTRUCTION

REV.NO.	DESCRIPTIONS	DATE
	REVISIONS	

SEAL

SEAL 025574 ENGINEER RICHARD MICHAEL CLAYTON NORTH CAROLINA
10/03/2014

McKIM&CREED
243 North Front Street
Wilmington, North Carolina 28401
Phone: (910)343-1048 , Fax: (910)251-8282
License: F-1222
www.mckimcreed.com

Newland COMMUNITIES
NASH North America Sakkiso House, LLC

RIVER ROAD

ROADWAY PLAN & PROFILE
PROPOSED RIVER ROAD
STA 108+00 – STA 120+00

DATE:	SEPTEMBER 2014
MCE PROJ. #	2735-0007
DRAWN	
DESIGNED	
CHECKED	RMC
PROJ. MGR.	RMC

SCALE
HORIZONTAL: 1"=40'
VERTICAL: 1"=4'

M&C FILE NUMBER CU-709
DRAWING NUMBER 13

STATUS: FINAL DESIGN PLANS
REVISION

S:\2735\0007\80-Drawings\CU709-027350007.dwg, 10/3/2014 12:08:41 PM, nlauretta, ANSI D (22.00 x 34.00 Inches), 1:1

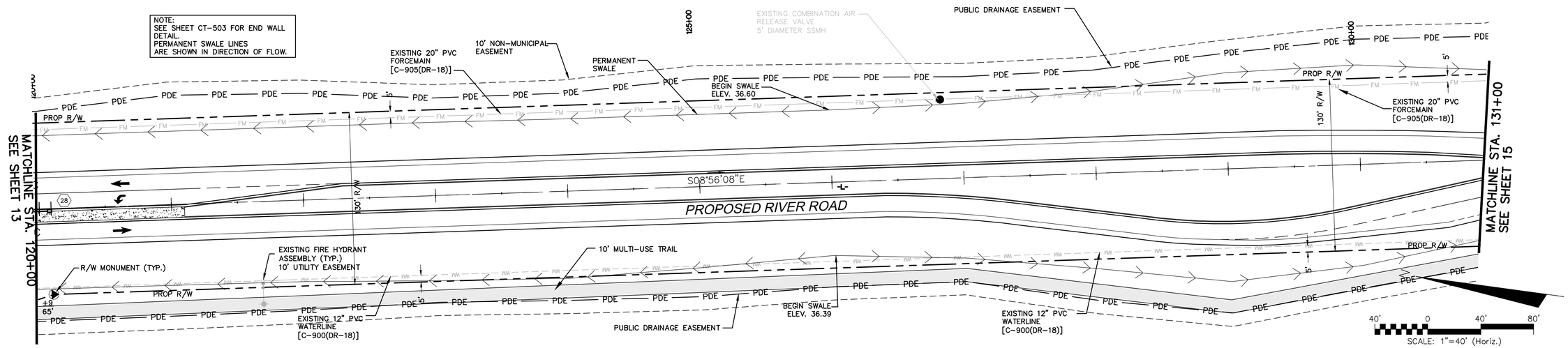

LOCATION		RUNOFF									PIPE DESIGN						UPSTREAM	INLET	UPSTREAM	AS-BUILT		
FROM	TO		CUM.		PIPE L	INLET	FLOW	DESIGN	INT	DISCH.	INV IN	INV OUT	SLOPE	DIA.	MAT.	CAP.	RIM	SPREAD	NCDOT	RIM	IN	OUT
		D.A.(AC.)	D.A.(AC.)	CA	(FT)	TIME	TIME	TIME	I(IN/HR)	Q (CFS)	(FT.)	(FT.)	(FT/FT)	(IN)		(CFS)	ELEV.	(FT)	STD. NO.	ELEV.	ELEV.	ELEV.
28	27	0.03	0.03	0.026	121	5.00	5.00	10.00	7.13	0.187	23.47	20.43	0.02511	18	C	13	27.72	2.30	840.17	27.26	23.09	20.33

PDE=PUBLIC DRAINAGE EASEMENT

NOTE:
SEE SHEETS
3A TO 3H ROADWAY GEOMETRY PLANS
PM-1 TO PM-8 PAVEMENT MARKINGS, MARKERS AND SIGNING

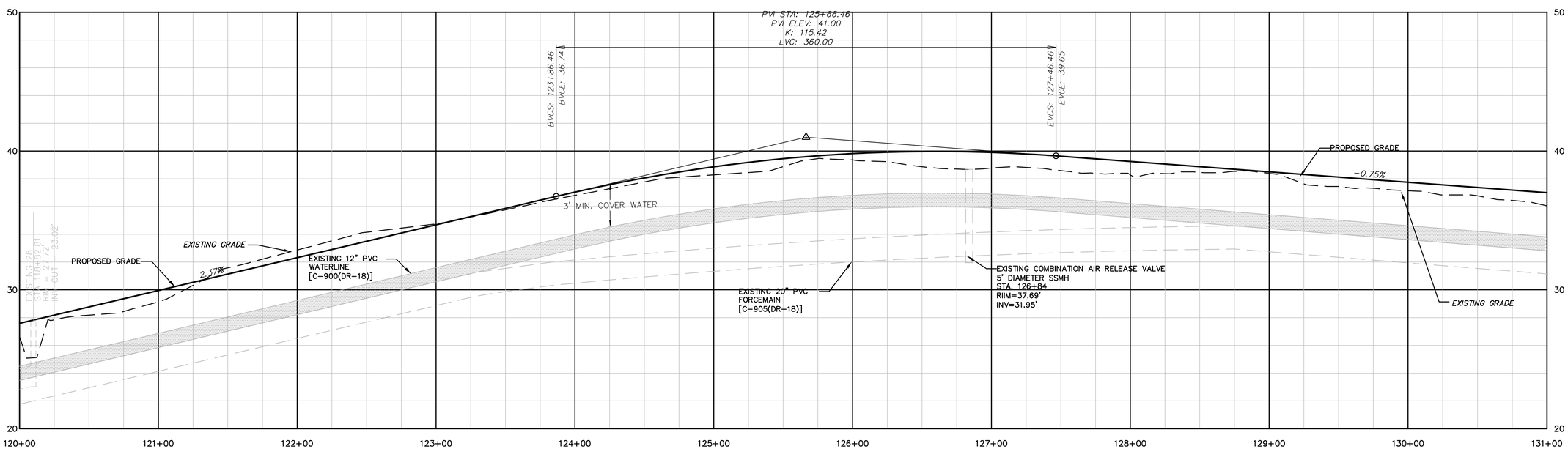

ISSUED FOR PERMITTING
NOT FOR CONSTRUCTION

PROPOSED RIVER ROAD

REV.NO.	DESCRIPTIONS	DATE

REVISIONS

SEAL

SEAL 022574 ENGINEER NORTH CAROLINA
10/03/2014

McKIM&CREED
243 North Front Street
Wilmington, North Carolina 28401
Phone: (910)343-1048 , Fax: (910)251-8282
License: F-1222
www.mckimcreed.com

Newland COMMUNITIES

NASH North America Design House, LLC

RIVER ROAD

ROADWAY PLAN & PROFILE
PROPOSED RIVER ROAD
STA 120+00 – STA 131+00

DATE:	SEPTEMBER 2014
MCE PROJ. #	2735-0007
DRAWN	
DESIGNED	
CHECKED	RMC
PROJ. MGR.	RMC

SCALE
HORIZONTAL: 1"=40'
VERTICAL: 1"=4'

M&C FILE NUMBER CU-710
DRAWING NUMBER 14

STATUS: FINAL DESIGN PLANS
REVISION

S:\2735\0007\80-Drawings\CU710-027350007.dwg, 10/3/2014 12:09:45 PM, nlaurenta, ANSI D (22.00 x 34.00 Inches), 1:1

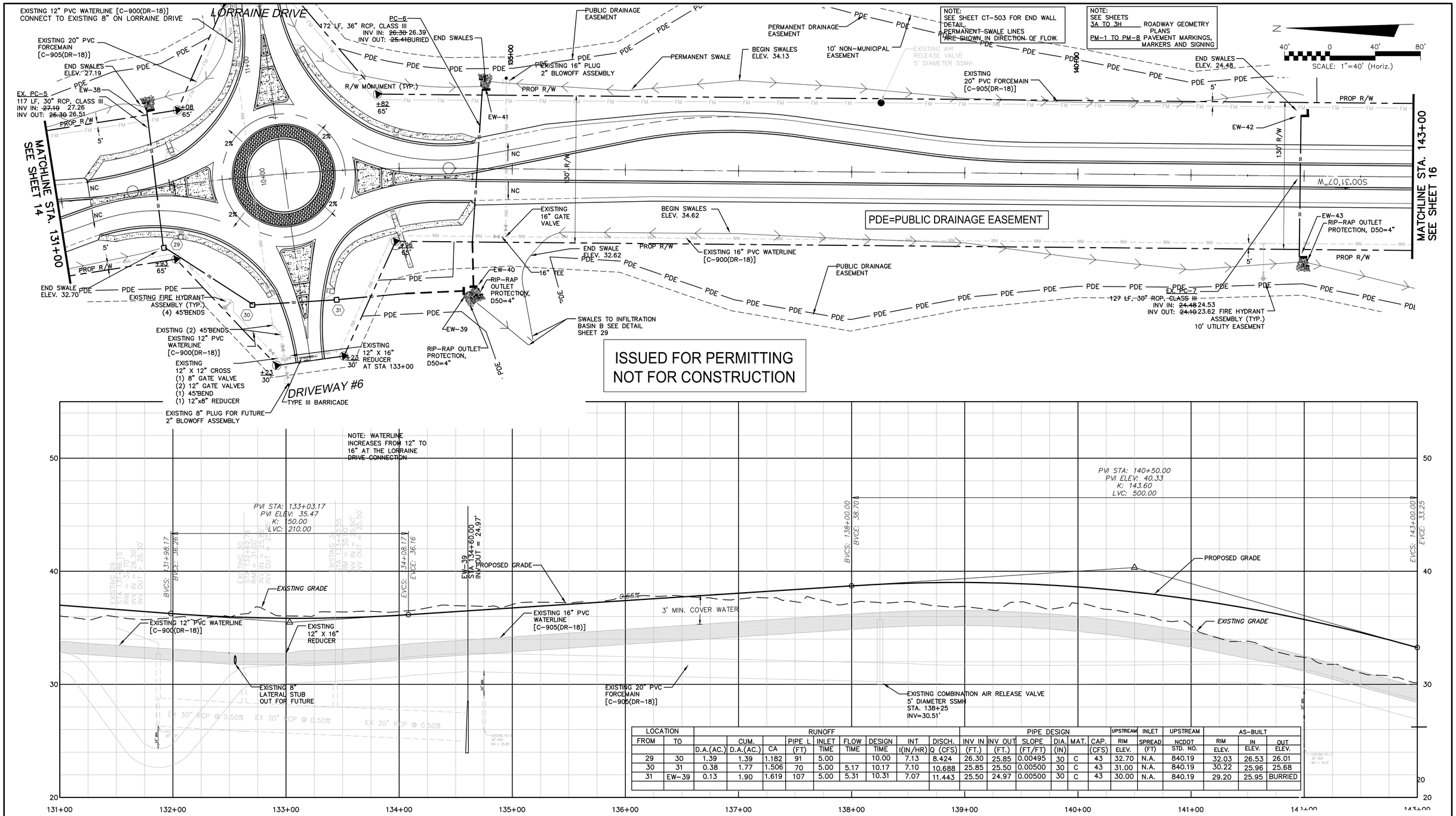

LOCATION		RUNOFF									PIPE DESIGN						UPSTREAM	INLET	UPSTREAM	AS-BUILT		
FROM	TO		CUM.		PIPE L	INLET	FLOW	DESIGN	INT	DISCH.	INV IN	INV OUT	SLOPE	DIA.	MAT.	CAP.	RIM	SPREAD	NCDOT	RIM	IN	OUT
		D.A.(AC.)	D.A.(AC.)	CA	(FT)	TIME	TIME	TIME	I(IN/HR)	Q (CFS)	(FT.)	(FT.)	(FT/FT)	(IN)		(CFS)	ELEV.	(FT)	STD. NO.	ELEV.	ELEV.	ELEV.
29	30	1.39	1.39	1.182	91	5.00		10.00	7.13	8.424	26.30	25.85	0.00495	30	C	43	32.70	N.A.	840.19	32.03	26.53	26.01
30	31	0.38	1.77	1.506	70	5.00	5.17	10.17	7.10	10.688	25.85	25.50	0.00500	30	C	43	31.00	N.A.	840.19	30.22	25.96	25.68
31	EW-39	0.13	1.90	1.619	107	5.00	5.31	10.31	7.07	11.443	25.50	24.97	0.00500	30	C	43	30.00	N.A.	840.19	29.20	25.95	BURRIED

PROPOSED RIVER ROAD

REV.NO.	DESCRIPTIONS	DATE

REVISIONS

SEAL

McKIM&CREED
243 North Front Street
Wilmington, North Carolina 28401
Phone: (910)343-1048 , Fax: (910)251-8282
License: F-1222
www.mckimcreed.com

Newland COMMUNITIES

NASH

RIVER ROAD

ROADWAY PLAN & PROFILE
PROPOSED RIVER ROAD
STA 131+00 – STA 143+00

DATE: SEPTEMBER 2014
MCE PROJ. # 2735-0007
DRAWN
DESIGNED
CHECKED RMC
PROJ. MGR. RMC

SCALE
HORIZONTAL: 1"=40'
VERTICAL: 1"=4'

M&C FILE NUMBER CU-711
DRAWING NUMBER 15

STATUS: FINAL DESIGN PLANS
REVISION

S:\2735\0007\80-Drawings\CU711-027350007.dwg, 10/3/2014 12:10:48 PM, nilaretta, ANSI D (22.00 x 34.00 Inches), 1:1

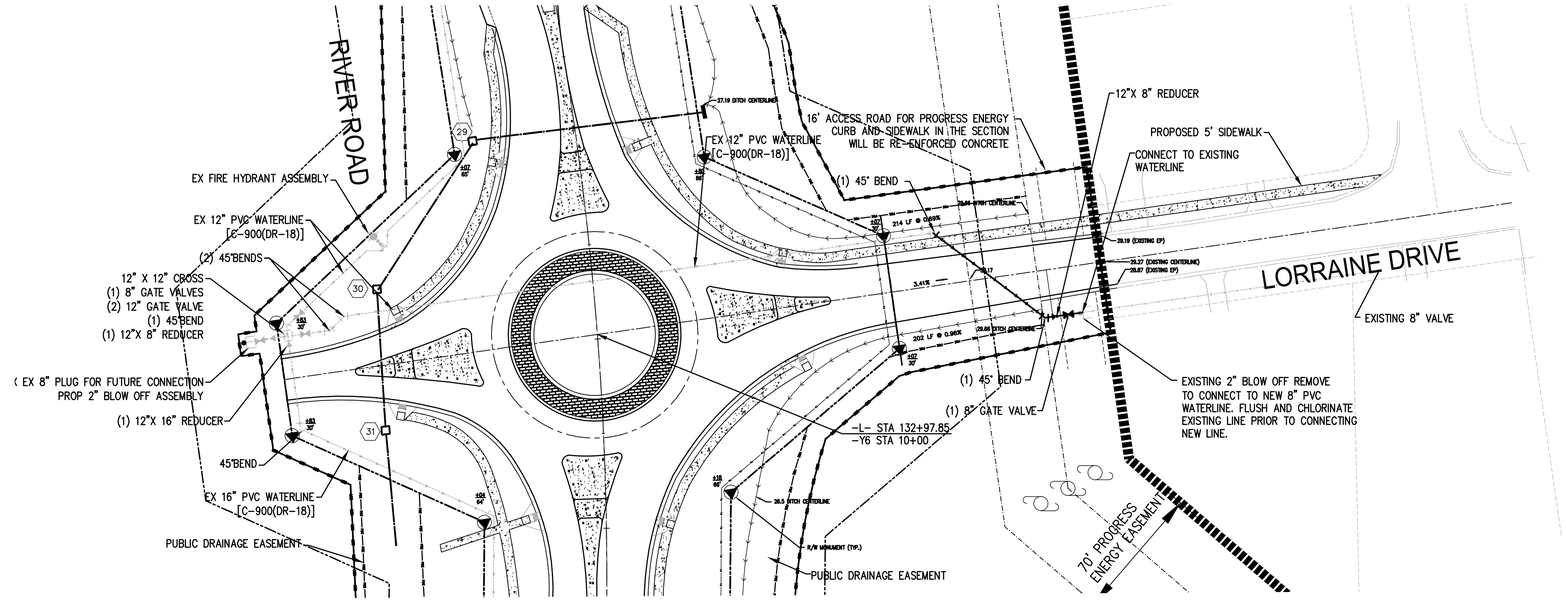

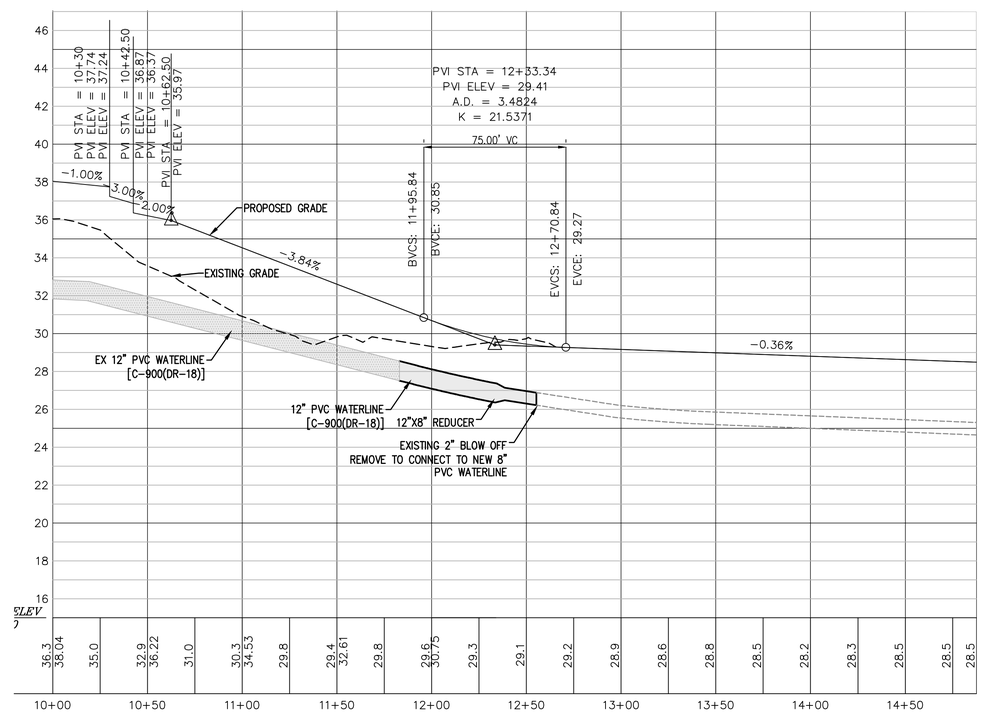

PDE=PUBLIC DRAINAGE EASEMENT

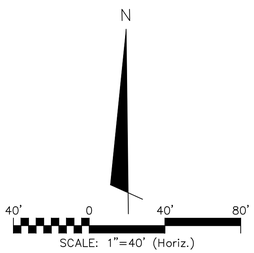

ISSUED FOR PERMITTING
NOT FOR CONSTRUCTION

REV.NO.	DESCRIPTIONS	DATE

REVISIONS

SEAL

SEAL 022574 ENGINEER NORTH CAROLINA
10/03/2014

McKIM&CREED
243 North Front Street
Wilmington, North Carolina 28401
Phone: (910)343-1048 , Fax: (910)251-8282
License: F-1222
www.mckimcreed.com

Newland COMMUNITIES

NASH North America Service House, LLC

RIVER ROAD

ROADWAY PLAN & PROFILE

LORRAINE DRIVE CONNECTION

DATE:	SEPTEMBER 2014
MCE PROJ. #	2735-0007
DRAWN	
DESIGNED	
CHECKED	RMC
PROJ. MGR.	RMC

SCALE
HORIZONTAL: 1"=40'
VERTICAL: 1"=4'

M&C FILE NUMBER CU-711A
DRAWING NUMBER 15A

STATUS: FINAL DESIGN PLANS
REVISION

S:\2735\000790-Drawings\CU711A-027350007.dwg, 10/3/2014 12:11:53 PM, rilaretta,
ANSI D (22.00 x 34.00 Inches), 1:1

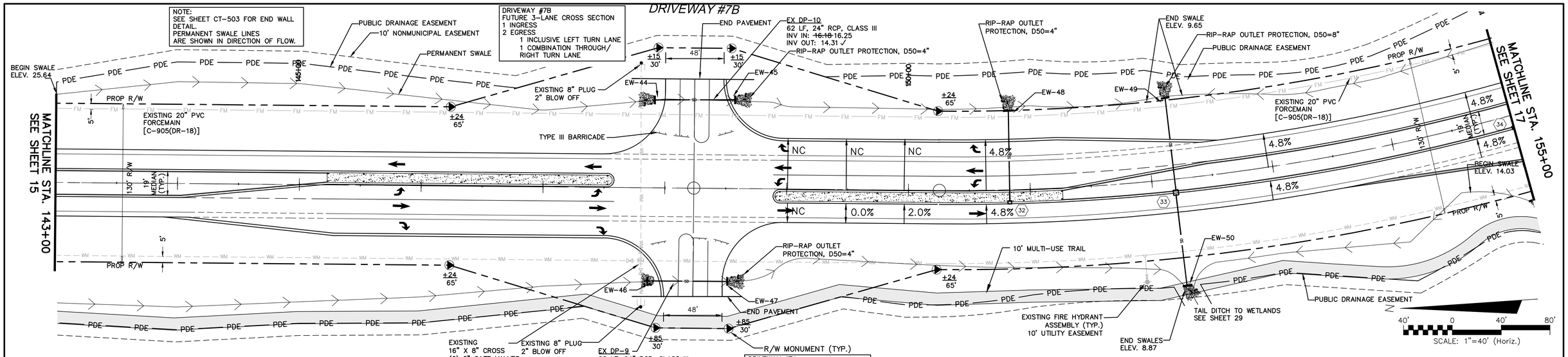

NOTE:
SEE SHEETS
3A TO 3H ROADWAY GEOMETRY PLANS
PM-1 TO PM-8 PAVEMENT MARKINGS, MARKERS AND SIGNING

ISSUED FOR PERMITTING
NOT FOR CONSTRUCTION

PDE=PUBLIC DRAINAGE EASEMENT

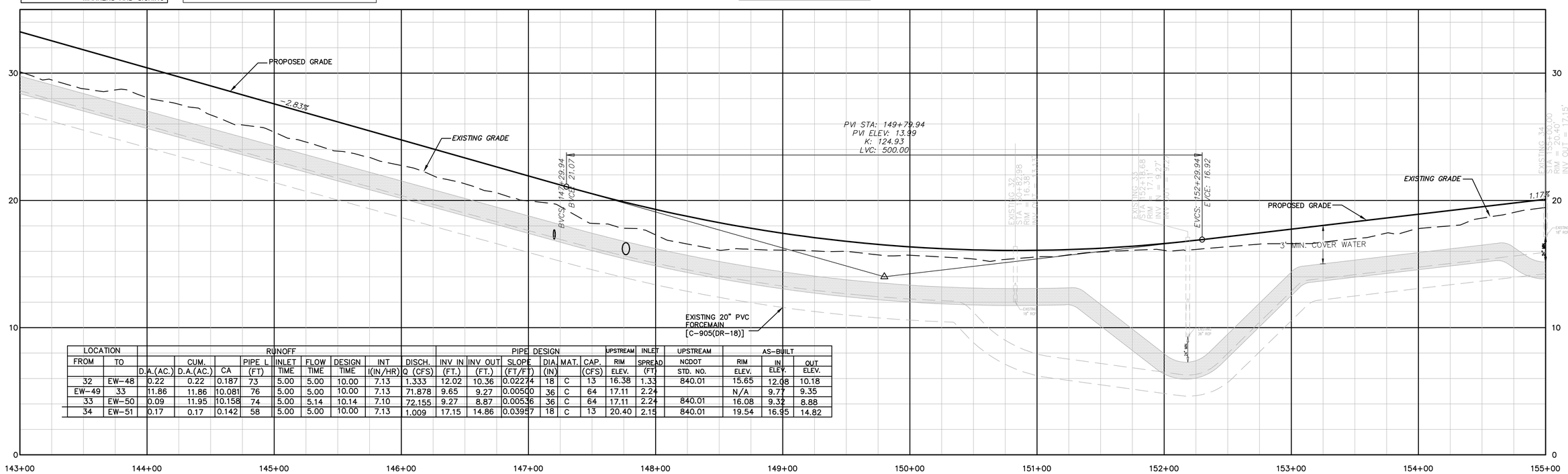

LOCATION		RUNOFF									PIPE DESIGN						UPSTREAM	INLET	UPSTREAM	AS-BUILT		
FROM	TO		CUM.		PIPE L	INLET	FLOW	DESIGN	INT	DISCH.	INV IN	INV OUT	SLOPE	DIA.	MAT.	CAP.	RIM	SPREAD	NCDOT	RIM	IN	OUT
		D.A.(AC.)	D.A.(AC.)	CA	(FT)	TIME	TIME	TIME	I(IN/HR)	Q (CFS)	(FT.)	(FT.)	(FT/FT)	(IN)		(CFS)	ELEV.	(FT)	STD. NO.	ELEV.	ELEV.	ELEV.
32	EW-48	0.22	0.22	0.187	73	5.00	5.00	10.00	7.13	1.333	12.02	10.36	0.02274	18	C	13	16.38	1.33	840.01	15.65	12.08	10.18
EW-49	33	11.86	11.86	10.081	76	5.00	5.00	10.00	7.13	71.878	9.65	9.27	0.00500	36	C	64	17.11	2.24		N/A	9.77	9.35
33	EW-50	0.09	11.95	10.158	74	5.00	5.14	10.14	7.10	72.155	9.27	8.87	0.00536	36	C	64	17.11	2.24	840.01	16.08	9.32	8.88
34	EW-51	0.17	0.17	0.142	58	5.00	5.00	10.00	7.13	1.009	17.15	14.86	0.03957	18	C	13	20.40	2.15	840.01	19.54	16.95	14.82

REV.NO.	DESCRIPTIONS	DATE
	REVISIONS	

SEAL

SEAL 022574 ENGINEER NORTH CAROLINA
10/03/2014

McKIM&CREED
243 North Front Street
Wilmington, North Carolina 28401
Phone: (910)343-1048 , Fax: (910)251-8282
License: F-1222
www.mckimcreed.com

Newland COMMUNITIES

NASH North America Scotsia House, LLC

RIVER ROAD

ROADWAY PLAN & PROFILE
PROPOSED RIVER ROAD
STA 143+00 – STA 155+00

DATE:	SEPTEMBER 2014
MCE PROJ. #	2735-0007
DRAWN	
DESIGNED	
CHECKED	RMC
PROJ. MGR.	RMC

SCALE
HORIZONTAL: 1"=40'
VERTICAL: 1"=4'

M&C FILE NUMBER CU-712
DRAWING NUMBER 16

STATUS: FINAL DESIGN PLANS
REVISION

S:\2735\0007\90-Drawings\CU712-0273500007.dwg, 10/3/2014 12:12:55 PM, nlaurietta, ANSI D (22.00 x 34.00 Inches), 1:1

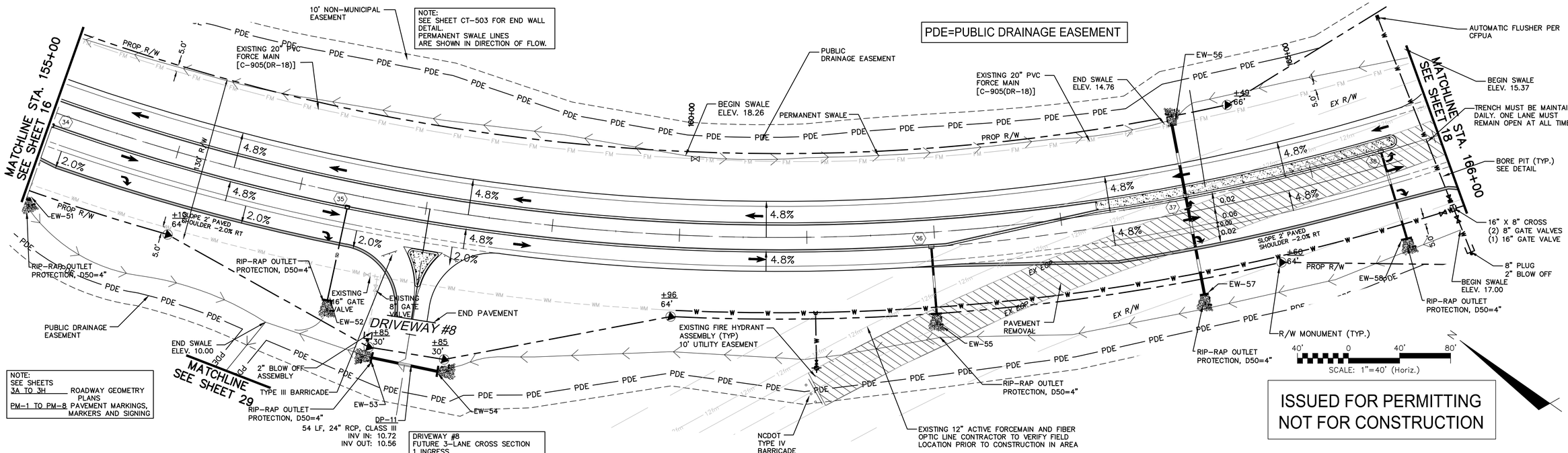

ISSUED FOR PERMITTING
NOT FOR CONSTRUCTION

LOCATION		RUNOFF									PIPE DESIGN						UPSTREAM	INLET	UPSTREAM	AS-BUILT		
FROM	TO		CUM.		PIPE L	INLET	FLOW	DESIGN	INT	DISCH.	INV IN	INV OUT	SLOPE	DIA.	MAT.	CAP.	RIM	SPREAD	NCDOT	RIM	IN	OUT
		D.A.(AC.)	D.A.(AC.)	CA	(FT)	TIME	TIME	TIME	I(IN/HR)	Q (CFS)	(FT.)	(FT.)	(FT/FT)	(IN)		(CFS)	ELEV.	(FT)	STD. #	ELEV.	ELEV.	ELEV.
35	EW-52	0.15	0.15	0.125	70	5.00	5.00	10.00	7.13	0.891	19.95	17.78	0.03100	18	C	13	23.20	1.99	840.01	22.85	20.02	17.68
36	EW-55	0.16	0.16	0.136	55	5.00	5.00	10.00	7.13	0.969	20.40	18.93	0.02689	18	C	13	23.65	2.06	840.01			
EW-56	37	1.47	1.47	1.250	55	5.00	5.00	10.00	7.13	8.909	14.76	14.36	0.00727	24	C	25	22.22	5.75	840.17			
37	EW-57	0.14	1.61	1.373	78	5.00	5.12	10.12	7.11	9.755	14.36	13.97	0.00503	24	C	25	22.22	5.75	840.17			
38	EW-58	0.15	0.15	0.130	71	5.00	5.00	10.00	7.13	0.927	18.47	17.45	0.01426	18	C	13	21.47	5.85	840.18			

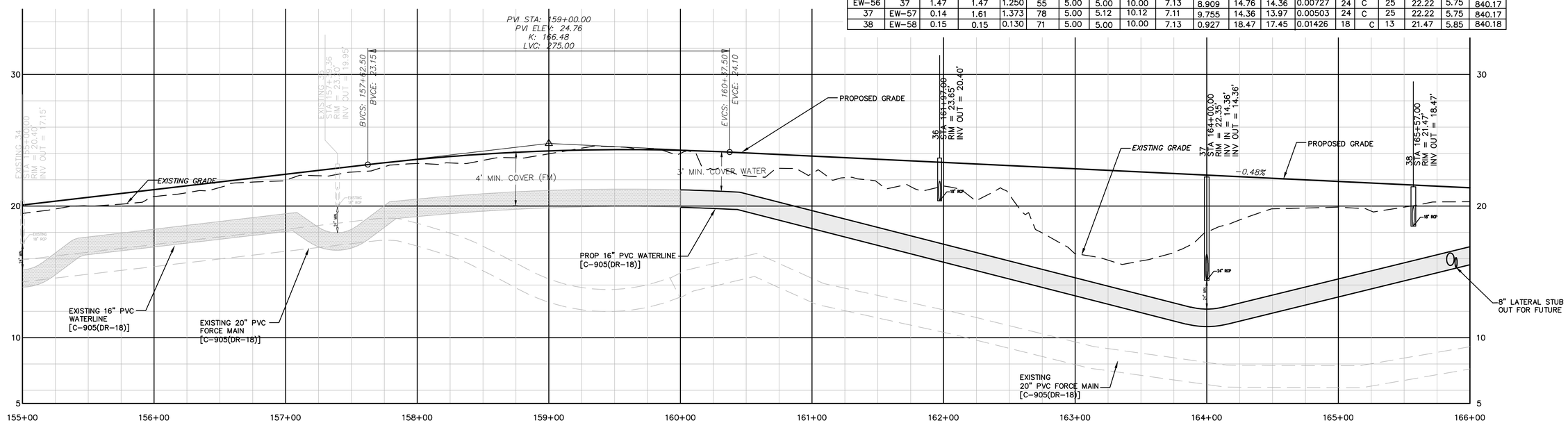

REV.NO.	DESCRIPTIONS	DATE
	REVISIONS	

SEAL

McKIM&CREED
243 North Front Street
Wilmington, North Carolina 28401
Phone: (910)343-1048 , Fax: (910)251-8282
License: F-1222
www.mckimcreed.com

Newland COMMUNITIES

RIVER ROAD

ROADWAY PLAN & PROFILE
PROPOSED RIVER ROAD
STA 155+00 – STA 166+00

DATE:	SEPTEMBER 2014
MCE PROJ. #	2735-0007
DRAWN	
DESIGNED	
CHECKED	RMC
PROJ. MGR.	RMC

SCALE
HORIZONTAL: 1"=40'
VERTICAL: 1"=4'

MAC FILE NUMBER CU-713
DRAWING NUMBER 17

STATUS: FINAL DESIGN PLANS
REVISION

S:\2735\0007\90-Drawings\CU713-027350007.dwg, 10/3/2014 12:57:10 PM, nilaretta,
ANSI D (22.00 x 34.00 Inches), 1:1

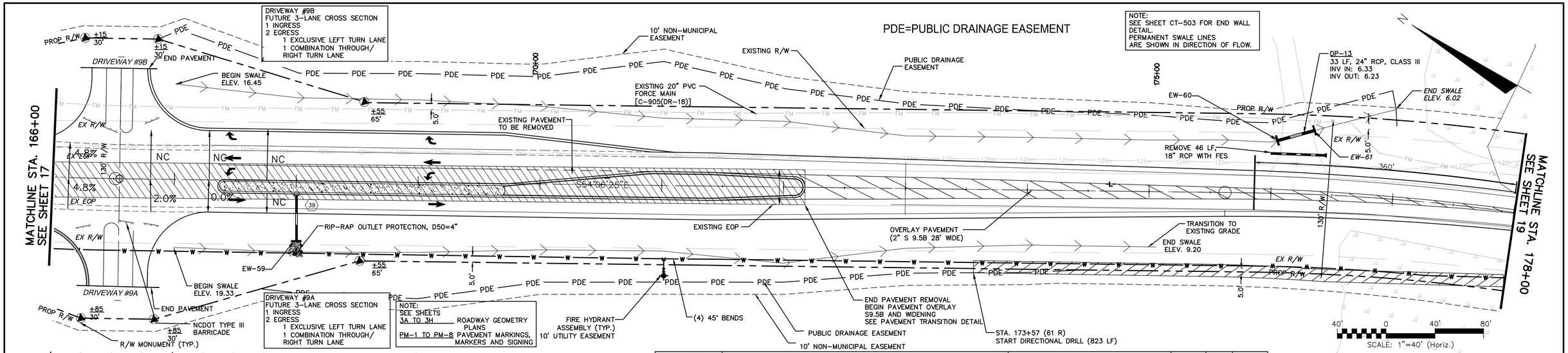

LOCATION		RUNOFF									PIPE DESIGN						UPSTREAM	INLET	UPSTREAM
FROM	TO		CUM.		PIPE L	INLET	FLOW	DESIGN	INT	DISCH.	INV IN	INV OUT	SLOPE	DIA.	MAT.	CAP.	RIM	SPREAD	NCDOT
		D.A.(AC.)	D.A.(AC.)	CA	(FT)	TIME	TIME	TIME	I(IN/HR)	Q (CFS)	(FT.)	(FT.)	(FT/FT)	(IN)		(CFS)	ELEV.	(FT)	STD. #
39	EW-59	0.07	0.07	0.062	38	5.00	5.00	10.00	7.13	0.442	17.32	17.13	0.00501	18	C	13	20.32	5.14	840.18

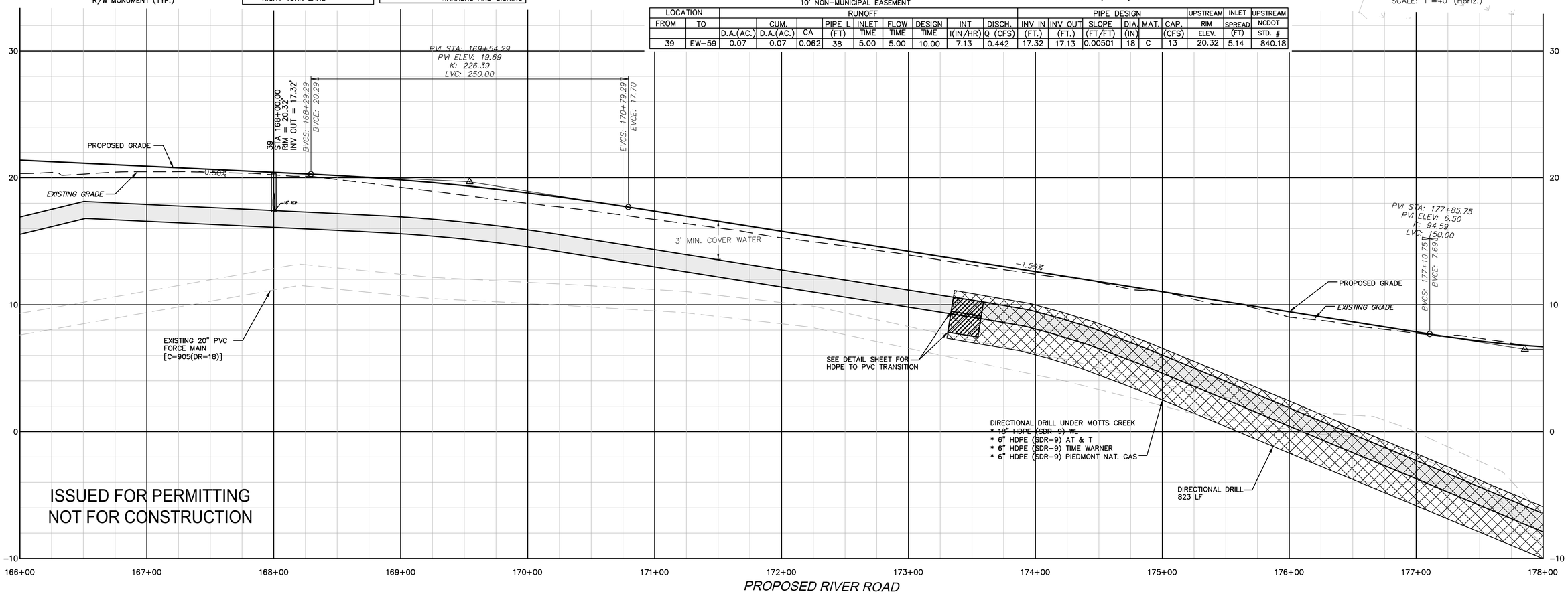

ISSUED FOR PERMITTING
NOT FOR CONSTRUCTION

REV.NO.	DESCRIPTIONS	DATE
	REVISIONS	

SEAL

McKIM&CREED
243 North Front Street
Wilmington, North Carolina 28401
Phone: (910)343-1048 , Fax: (910)251-8282
License: F-1222
www.mckimcreed.com

Newland COMMUNITIES

NASH North America Scrubs House, LLC

RIVER ROAD

ROADWAY PLAN & PROFILE
PROPOSED RIVER ROAD
STA 166+00 - STA 178+00

DATE:	SEPTEMBER 2014
MCE PROJ. #	2735-0007
DRAWN	
DESIGNED	
CHECKED	RMC
PROJ. MGR.	RMC

SCALE
HORIZONTAL: 1"=40'
VERTICAL: 1"=4'

M&C FILE NUMBER CU-714
DRAWING NUMBER 18

STATUS: FINAL DESIGN PLANS
REVISION

S:\2735\0007\80-Drawings\CU714-027350007.dwg, 10/3/2014 12:14:56 PM, mlaaretta, ANSI D (22.00 x 34.00 Inches), 1:1

NOTE:
SEE SHEETS
3A TO 3H ROADWAY GEOMETRY PLANS
PM-1 TO PM-8 PAVEMENT MARKINGS, MARKERS AND SIGNING

NOTE:
SEE SHEET CT-503 FOR END WALL DETAIL.
PERMANENT SWALE LINES ARE SHOWN IN DIRECTION OF FLOW.

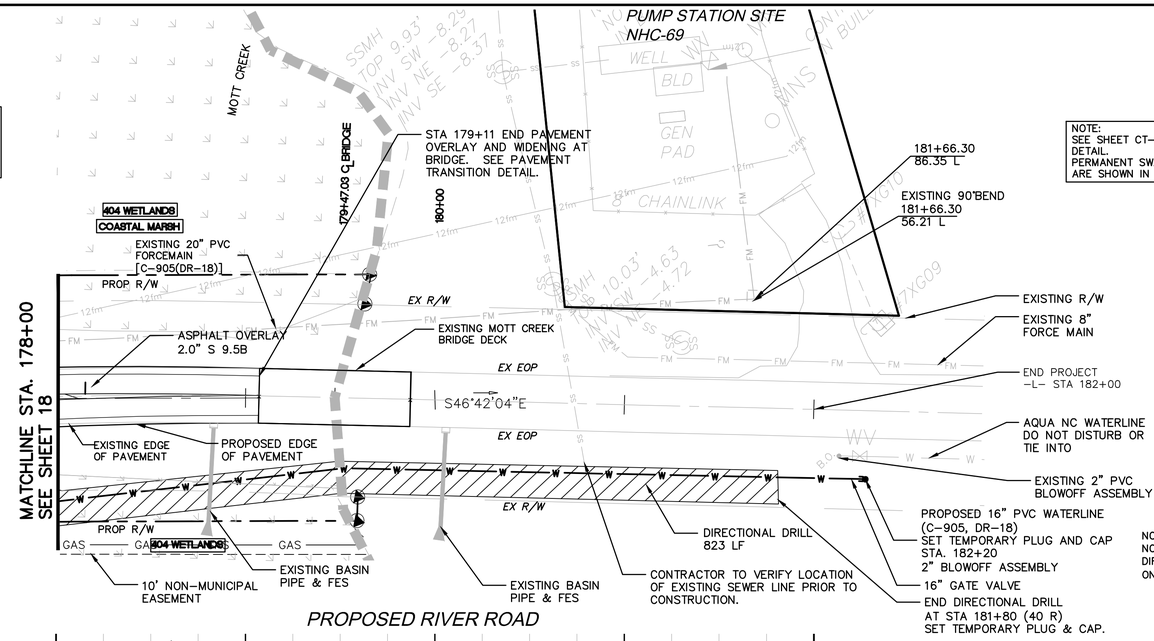

NOTE:
NO FURTHER WETLAND IMPACTS ON SITE.
DIRECTIONAL BORE WILL BEGIN AND END IN UPLANDS ON BOTH SIDES OF THE CREEK.

N

40' 0 40' 80'
SCALE: 1"=40' (Horiz.)

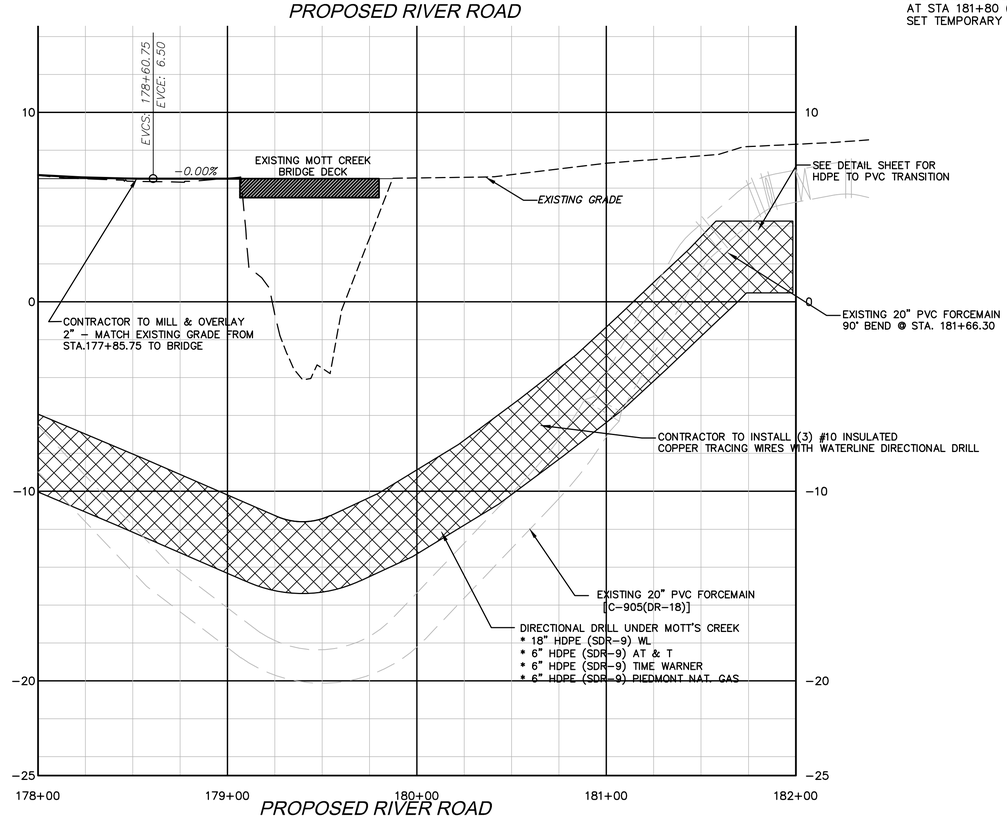

ISSUED FOR PERMITTING
NOT FOR CONSTRUCTION

REV.NO.	DESCRIPTIONS	DATE

REVISIONS

SEAL

SEAL 022574 ENGINEER RICHARD MICHAEL COLLIER
10/03/2014

McKIM & CREED
243 North Front Street
Wilmington, North Carolina 28401
Phone: (910)343-1048 , Fax: (910)251-8282
License: F-1222
www.mckimcreed.com

Newland® COMMUNITIES

NORTH AMERICA SERVICE HOUSE, LLC

RIVER ROAD

ROADWAY PLAN & PROFILE
PROPOSED RIVER ROAD
STA 178+00 - STA 182+00

DATE:	SEPTEMBER 2014
MCE PROJ. #	2735-0007
DRAWN	
DESIGNED	
CHECKED	RMC
PROJ. MGR.	RMC

SCALE
HORIZONTAL: 1"=40'
VERTICAL: 1"=4'

M&C FILE NUMBER CU-715
DRAWING NUMBER 19

STATUS: FINAL DESIGN PLANS
REVISION

S:\2735\0007\90-Drawings\CU715-027350007.dwg, 10/3/2014 12:15:58 PM, nilarretta,
ANSI D (22.00 x 34.00 Inches), 1:1

STATE OF NORTH CAROLINA
DEPT. OF TRANSPORTATION
DIVISION OF HIGHWAYS
RALEIGH, N.C.

7-06

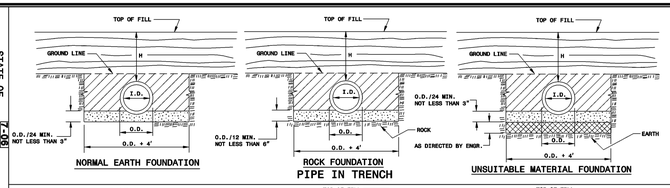

NORMAL EARTH FOUNDATION — ROCK FOUNDATION — UNSUITABLE MATERIAL FOUNDATION

PIPE IN TRENCH

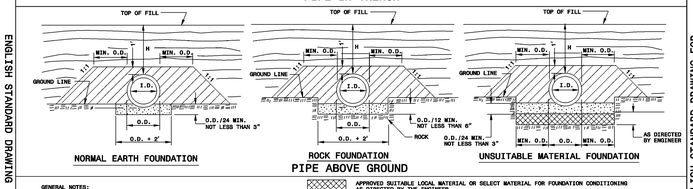

NORMAL EARTH FOUNDATION — ROCK FOUNDATION — UNSUITABLE MATERIAL FOUNDATION

PIPE ABOVE GROUND

GENERAL NOTES:

I.D. = THE MAXIMUM HORIZONTAL INSIDE DIMENSION.

O.D. = THE MAXIMUM HORIZONTAL OUTSIDE DIMENSION.

H = THE FILL HEIGHT MEASURED VERTICALLY AT ANY POINT ALONG THE PIPE FROM THE TOP OF THE PIPE TO THE TOP OF THE EMBANKMENT AT THAT POINT.

APPROVED SUITABLE LOCAL MATERIAL OR SELECT MATERIAL FOR FOUNDATION CONDITIONING AS DIRECTED BY THE ENGINEER.

APPROVED BACKFILL ON SELECT BACKFILL MATERIAL. WHEN 'H' IS GREATER THAN 30', USE SELECT MATERIAL OF THE APPROPRIATE CLASS AS FOLLOWS:

UNDISTURBED EARTH MATERIAL	SELECT MATERIAL	'H'
	CLASS IV	OVER 50 FEET
	CLASS III	OVER 40 FEET THROUGH 50 FEET
	CLASS II	OVER 30 FEET THROUGH 40 FEET

THE CLASS OF SELECT MATERIAL USED FOR AN INDIVIDUAL PIPE INSTALLATION IS BASED ON THE MAXIMUM 'H' WHICH OCCURS ALONG THE PIPE INSTALLATION. A HIGHER CLASS SELECT MATERIAL, NOT TO EXCEED CLASS IV, MAY BE USED IN LIEU OF CLASS II OR III.

SELECT MATERIAL WILL NOT BE REQUIRED AROUND THOSE PORTIONS OF AN INDIVIDUAL PIPE INSTALLATION LOCATED UNDER THAT PART OF THE FILL WHERE 'H' IS 30 FEET OR LESS

DO NOT OPERATE HEAVY EQUIPMENT OVER ANY PIPE CULVERT UNTIL THE PIPE CULVERT HAS BEEN PROPERLY BACKFILLED AND COVERED WITH AT LEAST 3 FEET OF APPROVED MATERIAL.

LOOSELY PLACED APPROVED SUITABLE LOCAL MATERIAL OR SELECT MATERIAL FOR FOUNDATION CONDITIONING AS DIRECTED BY THE ENGINEER.(STONE WILL NOT BE ALLOWED)

ENGLISH STANDARD DRAWING FOR
METHOD OF PIPE INSTALLATION
METHOD 'A'

SHEET 1 OF 1
300.01

STATE OF NORTH CAROLINA
DEPT. OF TRANSPORTATION
DIVISION OF HIGHWAYS
RALEIGH, N.C.

7-06

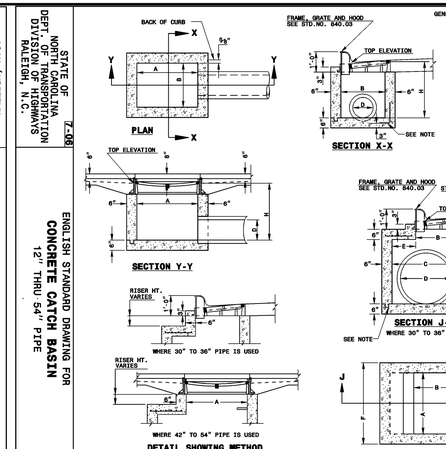

DETAIL SHOWING METHOD OF RISER CONSTRUCTION

GENERAL NOTES:

USE CLASS "B" CONCRETE THROUGHOUT.

PROVIDE ALL CATCH BASINS OVER 3'-6" IN DEPTH WITH STEPS 12" ON CENTER. USE STEPS WHICH COMPLY WITH STD. DRAWING 840.66.

OPTIONAL CONSTRUCTION - MONOLITHIC POUR, 2" KEYWAY, OR #4 BAR DOWELS AT 12" CENTERS AS DIRECTED BY THE ENGINEER.

USE FORMS FOR THE CONSTRUCTION OF THE BOTTOM SLAB.

IF REINFORCED CONCRETE PIPE IS SET IN BOTTOM SLAB OF BOX, ADD TO SLAB AS SHOWN ON STD. NO. 840.00.

USE TYPE "E", "F" AND "G" GRATES UNLESS OTHERWISE INDICATED.

FOR 8'-0" IN HEIGHT OR LESS USE 8" WALLS AND BOTTOM SLAB. OVER 8'-0" TO 16'-0" IN HEIGHT USE 8" WALLS AND BOTTOM SLAB. ADJUST QUANTITIES ACCORDINGLY.

CONSTRUCT WITH PIPE CROWNS MATCHING.

CHAMFER ALL EXPOSED CORNERS 1".

DRAWING NOT TO SCALE.

ENGLISH STANDARD DRAWING FOR
CONCRETE CATCH BASIN
12" THRU 54" PIPE

SHEET 1 OF 2
840.02

STATE OF NORTH CAROLINA
DEPT. OF TRANSPORTATION
DIVISION OF HIGHWAYS
RALEIGH, N.C.

7-06

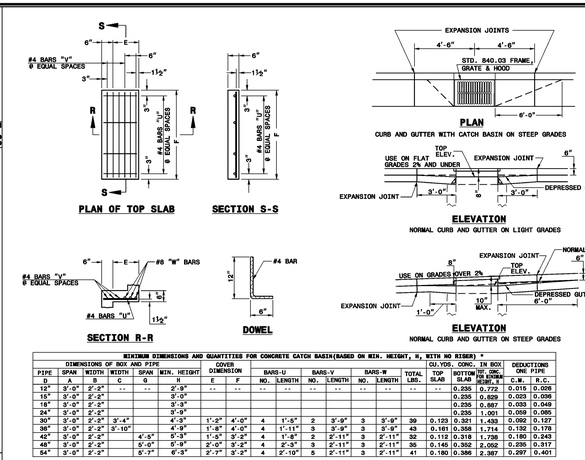

MINIMUM DIMENSIONS AND QUANTITIES FOR CONCRETE CATCH BASIN(BASED ON MIN. HEIGHT, H, WITH NO RISER) *

DIMENSIONS OF BOX AND PIPE						COVER DIMENSION		BARS-U		BARS-V		BARS-W		TOTAL LBS.	CU.YDS. CONC. IN BOX		DEDUCTIONS ONE PIPE	
PIPE	SPAN	WIDTH	WIDTH	SPAN	MIN. HEIGHT			NO.	LENGTH	NO.	LENGTH	NO.	LENGTH		TOP SLAB	BOTTOM SLAB	BOTTOM SLAB	TOP SLAB (EXP.) *	C.M.	R.C.
D	A	B	C	G	H	E	F													
12"	3'-0"	2'-2"	--	--	2'-8"	--	--	--	--	--	--	--	--	--	--	0.235	0.772	0.016	0.026
15"	3'-0"	2'-2"			3'-0"											0.235	0.829	0.023	0.036
18"	3'-0"	2'-2"			3'-3"											0.235	0.887	0.033	0.049
24"	3'-0"	2'-2"			3'-9"											0.235	1.001	0.059	0.085
30"	3'-0"	2'-2"	3'-4"		4'-3"	1'-3"	4'-0"	4	1'-5"	2	3'-9"	3	3'-9"	39	0.123	0.321	1.433	0.092	0.127
36"	3'-0"	2'-2"	3'-10"		4'-9"	1'-8"	4'-0"	4	1'-11"	3	3'-9"	3	3'-9"	43	0.161	0.358	1.714	0.132	0.178
42"	3'-0"	2'-2"		4'-5"	5'-3"	1'-8"	3'-2"	4	1'-8"	2	2'-11"	3	2'-11"	32	0.112	0.318	1.738	0.180	0.243
48"	3'-0"	2'-2"		5'-0"	5'-9"	2'-0"	3'-2"	4	2'-3"	3	2'-11"	3	2'-11"	36	0.145	0.352	2.052	0.236	0.317
54"	3'-0"	2'-2"		5'-7"	6'-3"	2'-7"	3'-2"	4	2'-10"	5	2'-11"	3	2'-11"	41	0.180	0.386	2.387	0.297	0.401

* RISER HAS .228 CUBIC YARDS OF CONCRETE PER FOOT HEIGHT

ENGLISH STANDARD DRAWING FOR
CONCRETE CATCH BASIN
12" THRU 54" PIPE

SHEET 2 OF 2
840.02

STATE OF NORTH CAROLINA
DEPT. OF TRANSPORTATION
DIVISION OF HIGHWAYS
RALEIGH, N.C.

7-06

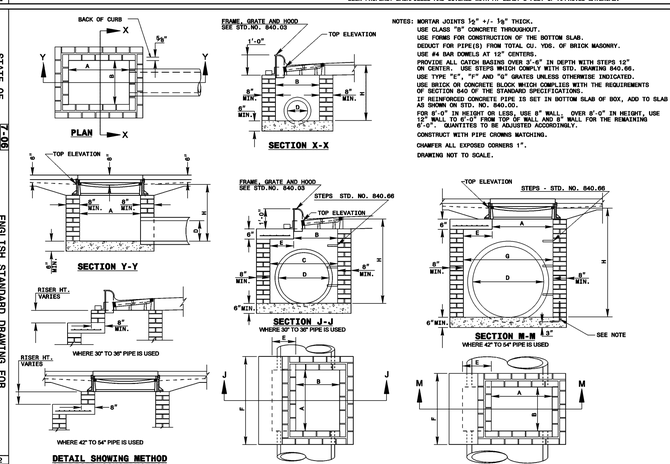

DETAIL SHOWING METHOD OF RISER CONSTRUCTION

NOTES: MORTAR JOINTS ½" +/- ⅛" THICK.

USE CLASS "B" CONCRETE THROUGHOUT.

USE FORMS FOR CONSTRUCTION OF THE BOTTOM SLAB.

DEDUCT FOR PIPE(S) FROM TOTAL CU. YDS. OF BRICK MASONRY.

USE #4 BAR DOWELS AT 12" CENTERS.

PROVIDE ALL CATCH BASINS OVER 3'-6" IN DEPTH WITH STEPS 12" ON CENTER. USE STEPS WHICH COMPLY WITH STD. DRAWING 840.66.

USE TYPE "E", "F" AND "G" GRATES UNLESS OTHERWISE INDICATED.

USE BRICK OR CONCRETE BLOCK WHICH COMPLIES WITH THE REQUIREMENTS OF SECTION 840 OF THE STANDARD SPECIFICATIONS.

IF REINFORCED CONCRETE PIPE IS SET IN BOTTOM SLAB OF BOX, ADD TO SLAB AS SHOWN ON STD. NO. 840.00.

FOR 8'-0" IN HEIGHT OR LESS, USE 8" WALL. OVER 8'-0" IN HEIGHT, USE 12" WALL TO 6'-0" FROM TOP OF WALL AND 8" WALL FOR THE REMAINING 6'-0". QUANTITIES TO BE ADJUSTED ACCORDINGLY.

CONSTRUCT WITH PIPE CROWNS MATCHING.

CHAMFER ALL EXPOSED CORNERS 1".

DRAWING NOT TO SCALE.

ENGLISH STANDARD DRAWING FOR
BRICK CATCH BASIN
12" THRU 54" PIPE

SHEET 1 OF 2
840.01

STATE OF NORTH CAROLINA
DEPT. OF TRANSPORTATION
DIVISION OF HIGHWAYS
RALEIGH, N.C.

7-06

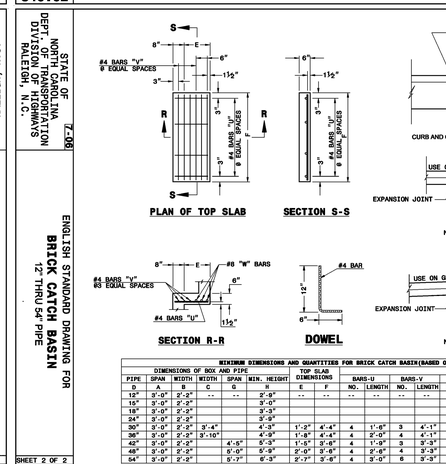

MINIMUM DIMENSIONS AND QUANTITIES FOR BRICK CATCH BASIN(BASED ON MIN. HEIGHT, H, WITH NO RISER)*

DIMENSIONS OF BOX AND PIPE						TOP SLAB DIMENSIONS		BARS-U		BARS-V		BARS-W		TOTAL LBS.	CU.YDS. CONC. IN BOX		BRICK MASONRY		DEDUCTIONS ONE PIPE	
PIPE	SPAN	WIDTH	WIDTH	SPAN	MIN. HEIGHT			NO.	LENGTH	NO.	LENGTH	NO.	LENGTH		TOP SLAB	BOTTOM SLAB	TOTAL CONC.	BRICK MASONRY IN WALL	TOTAL BRICK MASONRY	C.M.	R.C.
D	A	B	C	G	H	E	F														
12"	3'-0"	2'-2"	--	--	2'-8"	--	--	--	--	--	--	--	--	--	--	0.281	0.281	0.883	1.164	0.020	0.042
15"	3'-0"	2'-2"			3'-0"											0.281	0.281	0.963	1.244	0.031	0.047
18"	3'-0"	2'-2"			3'-3"											0.281	0.281	1.043	1.324	0.044	0.065
24"	3'-0"	2'-2"			3'-9"											0.281	0.281	1.204	1.485	0.078	0.121
30"	3'-0"	2'-2"	3'-4"		4'-3"	1'-2"	4'-4"	4	1'-8"	3	4'-1"	3	4'-1"	45	0.147	0.374	0.521	1.606	2.217	0.122	0.184
36"	3'-0"	2'-2"	3'-10"		4'-9"	1'-8"	3'-4"	4	2'-0"	4	4'-1"	3	4'-1"	49	0.187	0.415	0.602	1.814	2.516	0.176	0.261
42"	3'-0"	2'-2"		4'-5"	5'-3"	1'-5"	3'-6"	4	1'-9"	3	3'-3"	3	3'-3"	38	0.135	0.373	0.508	2.152	2.660	0.240	0.371
48"	3'-0"	2'-2"		5'-0"	5'-9"	2'-0"	3'-6"	4	2'-6"	4	3'-3"	3	3'-3"	41	0.173	0.410	0.583	2.415	2.998	0.313	0.477
54"	3'-0"	2'-2"		5'-7"	6'-3"	2'-7"	3'-6"	4	3'-0"	6	3'-3"	3	3'-3"	47	0.211	0.448	0.659	2.806	3.465	0.398	0.585

* RISER HAS .321 CUBIC YARDS OF BRICK MASONRY PER FOOT HEIGHT

ENGLISH STANDARD DRAWING FOR
BRICK CATCH BASIN
12" THRU 54" PIPE

SHEET 2 OF 2
840.01

STATE OF NORTH CAROLINA
DEPT. OF TRANSPORTATION
DIVISION OF HIGHWAYS
RALEIGH, N.C.

1-12

NOTES:
INSTALL ALL STEPS PROTRUDING 4" FROM INSIDE FACE OF STRUCTURE WALL.
STEPS DIFFERING IN DIMENSIONS, CONFIGURATION, OR MATERIALS FROM THOSE SHOWN MAY ALSO BE USED PROVIDED THE CONTRACTOR HAS FURNISHED THE ENGINEER WITH DETAILS OF THE PROPOSED STEPS AND HAS RECEIVED WRITTEN APPROVAL FROM THE ENGINEER FOR THE USE OF SUCH STEPS.

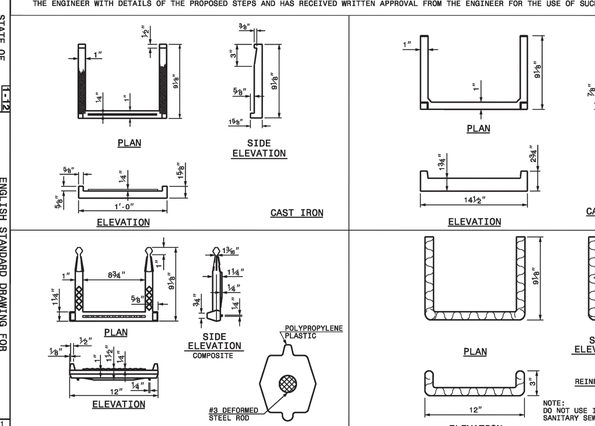

NOTE:
DO NOT USE IN SANITARY SEWER MANHOLES.

ENGLISH STANDARD DRAWING FOR
DRAINAGE STRUCTURE STEPS

SHEET 1 OF 1
840.66

STATE OF NORTH CAROLINA
DEPT. OF TRANSPORTATION
DIVISION OF HIGHWAYS
RALEIGH, N.C.

7-06

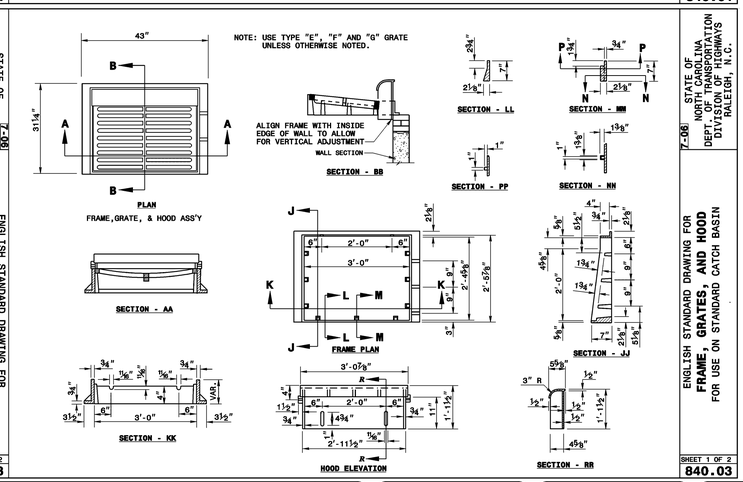

ENGLISH STANDARD DRAWING FOR
FRAME, GRATES, AND HOOD
FOR USE ON STANDARD CATCH BASIN

SHEET 1 OF 2
840.03

STATE OF NORTH CAROLINA
DEPT. OF TRANSPORTATION
DIVISION OF HIGHWAYS
RALEIGH, N.C.

7-06

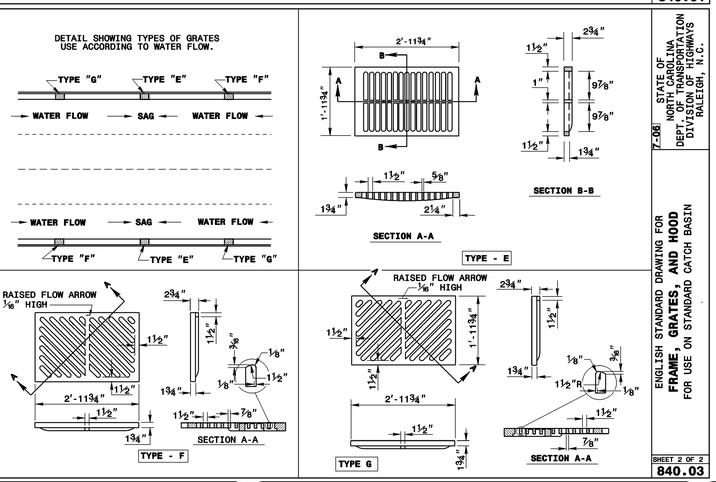

ENGLISH STANDARD DRAWING FOR
FRAME, GRATES, AND HOOD
FOR USE ON STANDARD CATCH BASIN

SHEET 2 OF 2
840.03

STATE OF NORTH CAROLINA
DEPT. OF TRANSPORTATION
DIVISION OF HIGHWAYS
RALEIGH, N.C.

1-12

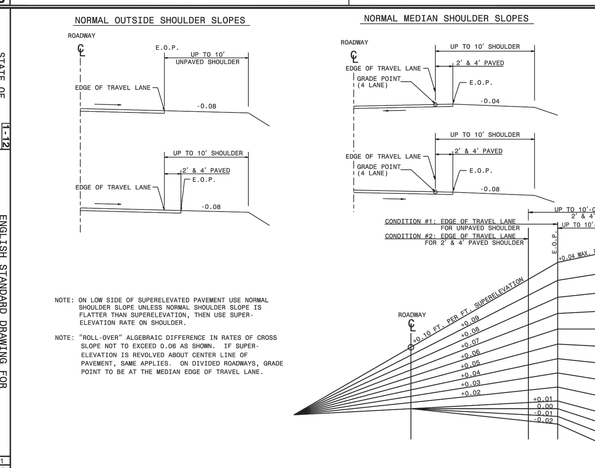

NOTE: ON LOW SIDE OF SUPERELEVATED PAVEMENT USE NORMAL SHOULDER SLOPE UNLESS NORMAL SHOULDER SLOPE IS FLATTER THAN SUPERELEVATION, THEN USE SUPER-ELEVATION RATE ON SHOULDER.

NOTE: "ROLL-OVER" ALGEBRAIC DIFFERENCE IN RATES OF CROSS SLOPE NOT TO EXCEED 0.06 AS SHOWN. IF SUPER-ELEVATION IS REVOLVED ABOUT CENTER LINE OF PAVEMENT, SAME APPLIES. ON DIVIDED ROADWAYS, GRADE POINT TO BE AT THE MEDIAN EDGE OF TRAVEL LANE.

ENGLISH STANDARD DRAWING FOR
METHOD OF SHOULDER CONSTRUCTION
HIGH SIDE OF SUPERELEVATED CURVE
METHOD I (SHOULDERS UP TO 10')

SHEET 1 OF 1
560.01

REV.NO.	DESCRIPTIONS	DATE
	REVISIONS	

SEAL

SEAL 022574 ENGINEER
10/03/2014

McKIM&CREED
243 North Front Street
Wilmington, North Carolina 28401
Phone: (910)343-1048 , Fax: (910)251-8282
License: F-1222
www.mckimcreed.com

Newland COMMUNITIES

NORTH AMERICA SCOTISH HOUSE, LLC

RIVER ROAD

ROADWAY DETAILS

DATE:	SEPTEMBER 2014
MCE PROJ. #	2735-0007
DRAWN	
DESIGNED	
CHECKED	RMC
PROJ. MGR.	RMC

SCALE
HORIZONTAL: 1"=40'
VERTICAL: N/A

M&C FILE NUMBER: CT-501
DRAWING NUMBER: 20

STATUS: FINAL DESIGN PLANS
REVISION

S:\2735\0007\90-Drawings\CT501-27350007.dwg, 10/3/2014 12:16:33 PM, nilauretta,
ANSI D (22.00 x 34.00 Inches); 1:1

STATE OF NORTH CAROLINA DEPT. OF TRANSPORTATION DIVISION OF HIGHWAYS RALEIGH, N.C. 1-12

ENGLISH STANDARD DRAWING FOR **SPECIAL SEDIMENT CONTROL FENCE**

NOTES

USE NO. 5 OR NO. 57 STONE FOR SEDIMENT CONTROL STONE.

USE HARDWARE CLOTH 24 GAUGE WIRE MESH WITH ¼ INCH MESH OPENINGS.

INSTALL 5 FT. SELF FASTENER ANGLE STEEL POST 2 FT. DEEP MINIMUM.

SPACE POST A MAXIMUM OF 3 FT.

FOR INSTALLATION BETWEEN SECTIONS OF SILT FENCE, EXTEND SEDIMENT CONTROL STONE A MINIMUM OF 12" IN WIDTH ON EACH SIDE OF SPECIAL SEDIMENT CONTROL FENCE SECTION.

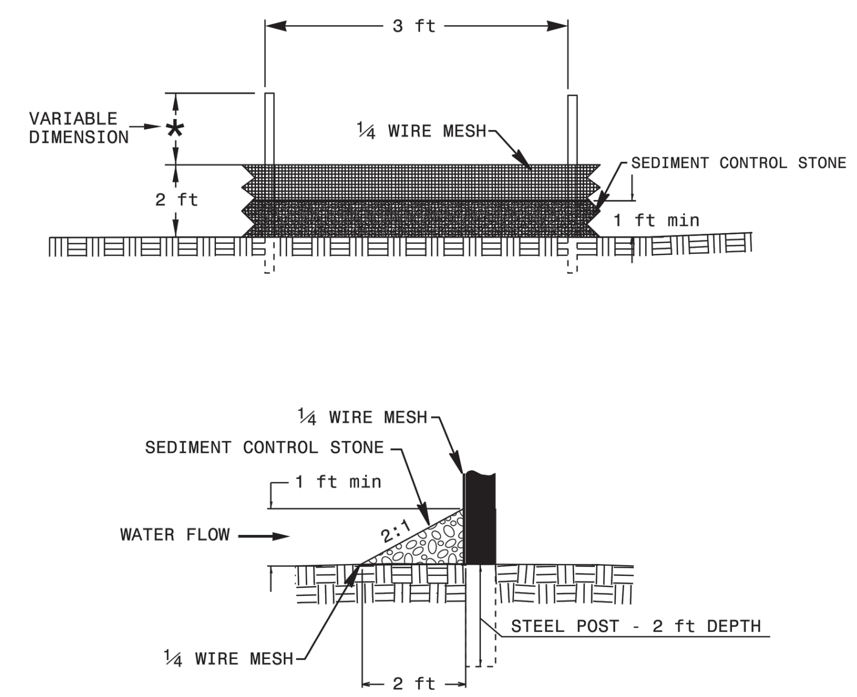

SHEET 1 OF 1 **1606.01**

STATE OF NORTH CAROLINA DEPT. OF TRANSPORTATION DIVISION OF HIGHWAYS RALEIGH, N.C. 1-12

ENGLISH STANDARD DRAWING FOR **GUIDE FOR RIP RAP AT PIPE OUTLETS**

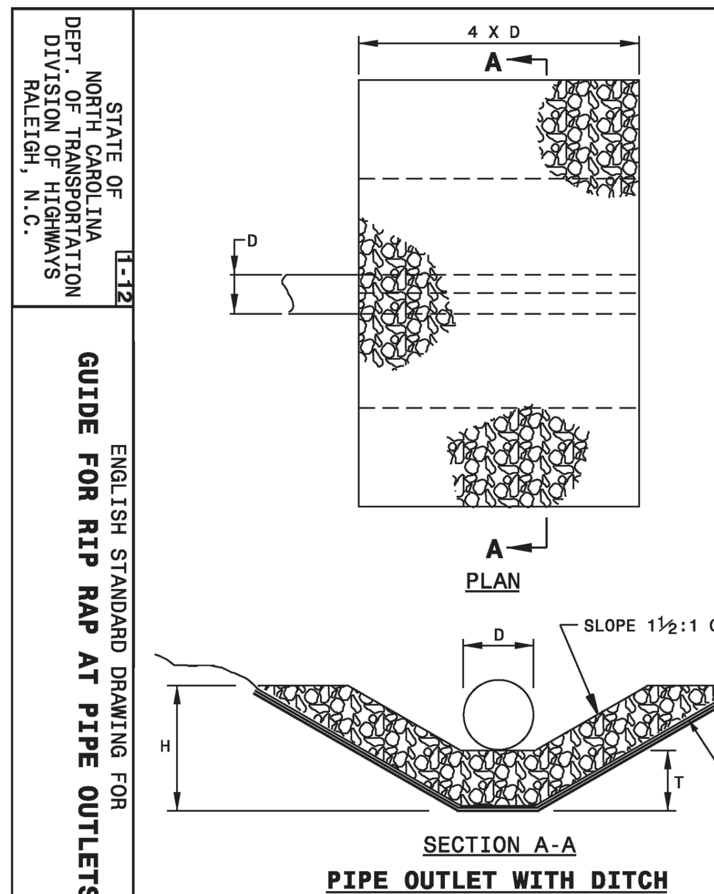

H= RIP RAP TO TOP OF PIPE (MAX. H = D + T)
T= 15" CLASS I RIP RAP, UNLESS OTHERWISE SHOWN ON PLANS
T= 12" CLASS 'B' RIP RAP, UNLESS OTHERWISE SHOWN ON PLANS

	OUTLET W/DITCH					OUTLET W/O DITCH				
D	CLASS 'B' RIP RAP		CLASS I RIP RAP			CLASS 'B' RIP RAP		CLASS I RIP RAP		
	TONS	GEO-TEXTILE (S.Y.)	S.Y.	TONS	GEO-TEXTILE (S.Y.)	TONS	GEO-TEXTILE (S.Y.)	S.Y.	TONS	GEO-TEXTILE (S.Y.)
12"	2	5	5	2	5	1	4	2	1	4
15"	2	7	7	3	7	1	5	3	2	6
18"	3	10	9	4	10	2	7	4	2	8
24"	5	14	15	7	15	3	11	7	4	12
30"	8	21	21	11	22	5	16	11	7	17
36"	11	28	29	15	30	7	22	16	10	23
42"	15	37	39	20	39	10	28	22	13	30
48"	-	-	49	26	50	-	-	28	17	38
54"	-	-	60	33	62	-	-	36	21	47
60"	-	-	73	40	75	-	-	44	26	56
66"	-	-	87	48	89	-	-	54	32	67
72"	-	-	102	57	104	-	-	64	38	78

NOTE:
FOR CALCULATION PURPOSES
CLASS 'B' RIP RAP = 100 LBS./FT³
CLASS I RIP RAP = 105 LBS./FT³

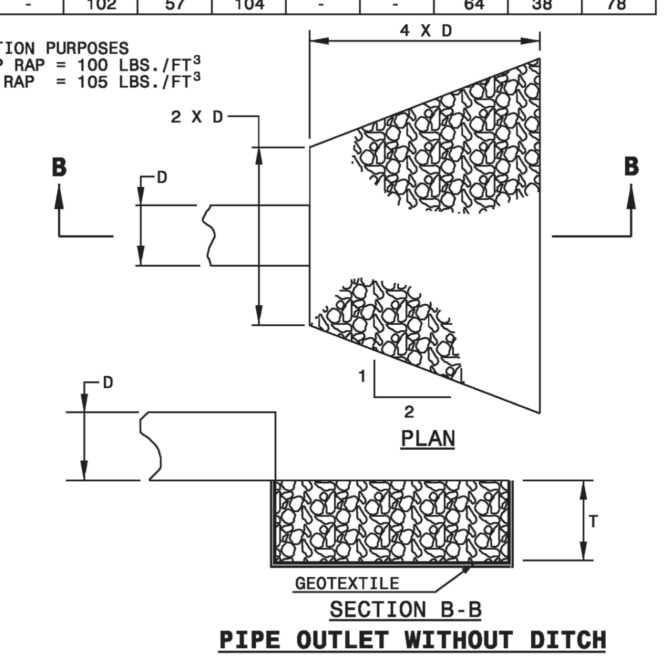

SHEET 1 OF 1 **876.02**

STATE OF NORTH CAROLINA DEPT. OF TRANSPORTATION DIVISION OF HIGHWAYS RALEIGH, N.C. 1-12

ENGLISH STANDARD DRAWING FOR **TEMPORARY LANE CLOSURES** 2-LANE, 2-WAY ROADWAY-1 LANE CLOSED

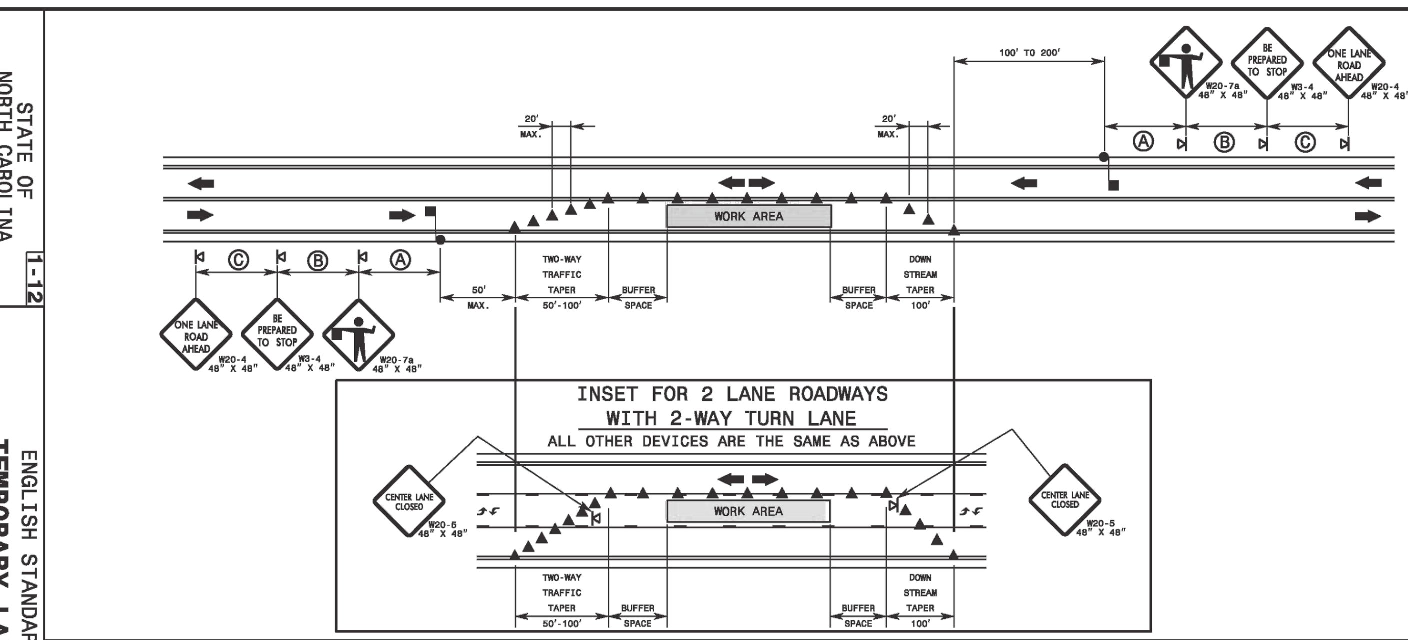

GENERAL NOTES FOR FLAGGER OPERATIONS

1- REFER TO STD. 1101.11 SHEET 4 FOR SIGN SPACING.
2- INSTALL LANE CLOSURES WITH THE TRAFFIC FLOW, BEGINNING WITH DEVICES ON THE UPSTREAM SIDE OF TRAFFIC.
3- REMOVE LANE CLOSURES AGAINST THE TRAFFIC FLOW, BEGINNING WITH DEVICES ON THE DOWNSTREAM SIDE OF TRAFFIC.
4- PLACE CONES THRU THE WORK AREA AT THE MAXIMUM SPACING EQUAL IN FEET TO 2 TIMES THE POSTED SPEED LIMIT.
5- EXTEND LANE CLOSURES AT THE BUFFER SPACE SUCH THAT STOPPING SIGHT DISTANCE IS PROVIDED TO THE FLAGGER (REFER TO STD. 1101.11 SHEET 2).
6- DO NOT STOP TRAFFIC IN ANY ONE DIRECTION FOR MORE THAN 5 MINUTES AT A TIME.
7- DRUMS OR SKINNY-DRUMS MAY BE USED IN LIEU OF CONES. REFER TO ROADWAY STANDARD DRAWING 1180.01 FOR SKINNY-DRUM REQUIREMENTS.
8- USE FLAGGERS TO CONTROL TRAFFIC AT INTERSECTIONS AFFECTED BY THE LANE CLOSURE. SUPPLEMENT FLAGGERS LOCATED AT INTERSECTIONS WITH FLAGGER AHEAD SIGNS (W20-7a) PLACED APPROXIMATELY 250 FT. IN ADVANCE OF THE FLAGGER. FOR SIGNALIZED INTERSECTIONS PLACE SIGNALS IN THE FLASH MODE AND RECOMMEND THE USE OF LAW ENFORCEMENT.
9- REFER TO 2009 MUTCD, CHAPTER 6, FOR FLAGGER CONTROL, REQUIREMENTS, AND PROCEDURES.
10- DO NOT EXCEED A 1 MILE LANE CLOSURE LENGTH UNLESS OTHERWISE SHOWN IN THE TMP OR AS DIRECTED BY THE ENGINEER.

GENERAL NOTES FOR PILOT CAR OPERATIONS

1- USE PILOT CARS WHEN DIRECTED BY THE ENGINEER.
2- IF ROADWAY WIDTH IS LESS THAN 22 FEET (EOP TO EOP), CONES MAY NOT BE REQUIRED ALONG WORK AREA, AND AT THE DISCRETION OF THE ENGINEER, CONES MAY BE OMITTED ALONG THE WORK AREA IF USING A PILOT CAR.
3- CONES ARE ALWAYS REQUIRED IN THE UPSTREAM AND DOWNSTREAM TAPERS.
4- MOUNT SIGN G20-4 "PILOT CAR FOLLOW ME" AT A CONSPICUOUS POSITION ON THE REAR OF THE PILOT VEHICLE.
5- DO NOT INSTALL MORE THAN ONE (1) MILE OF LANE CLOSURE, MEASURED FROM THE BEGINNING OF THE MERGE TAPER TO THE END OF THE LANE CLOSURE.
6- ADVISE RESIDENTS AND BUSINESSES WITHIN THE LANE CLOSURE LIMITS ABOUT METHODS OF SAFE EGRESS AND INGRESS FROM DRIVEWAYS DURING FLAGGING AND PILOT CAR OPERATIONS.

LEGEND

FLAGGER
CONE
PORTABLE SIGN
DIRECTION OF TRAFFIC FLOW

SHEET 1 OF 15 **1101.02**

STATE OF NORTH CAROLINA DEPT. OF TRANSPORTATION DIVISION OF HIGHWAYS RALEIGH, N.C. 7-06

ENGLISH STANDARD DRAWING FOR **WHEELCHAIR RAMP** CURB CUT

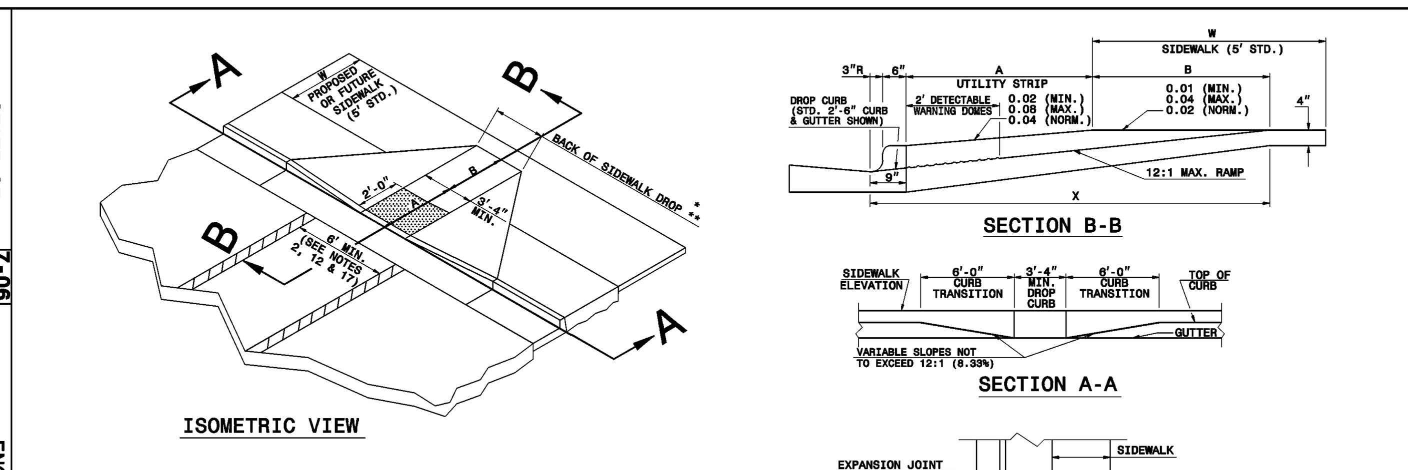

NOTES:
1. DETECTABLE WARNING DOMES SHALL COVER 2'-0" LENGTH AND FULL WIDTH OF THE RAMP FLOOR AS SHOWN ON THE DETAILS.
2. OBTAIN 70% CONTRAST VISIBILITY WITH ADJOINING SURFACE, EITHER LIGHT-ON-DARK, OR DARK-ON-LIGHT SEQUENCE COVERING THE ENTIRE RAMP.

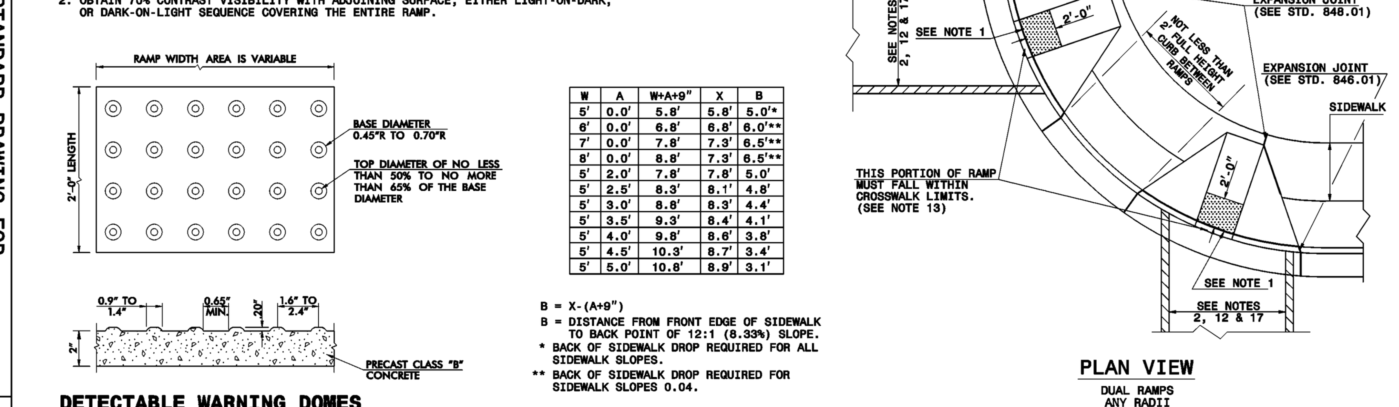

B = X-(A+9")
B = DISTANCE FROM FRONT EDGE OF SIDEWALK TO BACK POINT OF 12:1 (8.33%) SLOPE.
* BACK OF SIDEWALK DROP REQUIRED FOR ALL SIDEWALK SLOPES.
** BACK OF SIDEWALK DROP REQUIRED FOR SIDEWALK SLOPES 0.04.

SHEET 1 OF 4 **848.05**

STATE OF NORTH CAROLINA DEPT. OF TRANSPORTATION DIVISION OF HIGHWAYS RALEIGH, N.C. 7-06

ENGLISH STANDARD DRAWING FOR **RETROFITTING DETECTABLE WARNING DOMES ONTO EXISTING WHEELCHAIR RAMP** CURB CUT

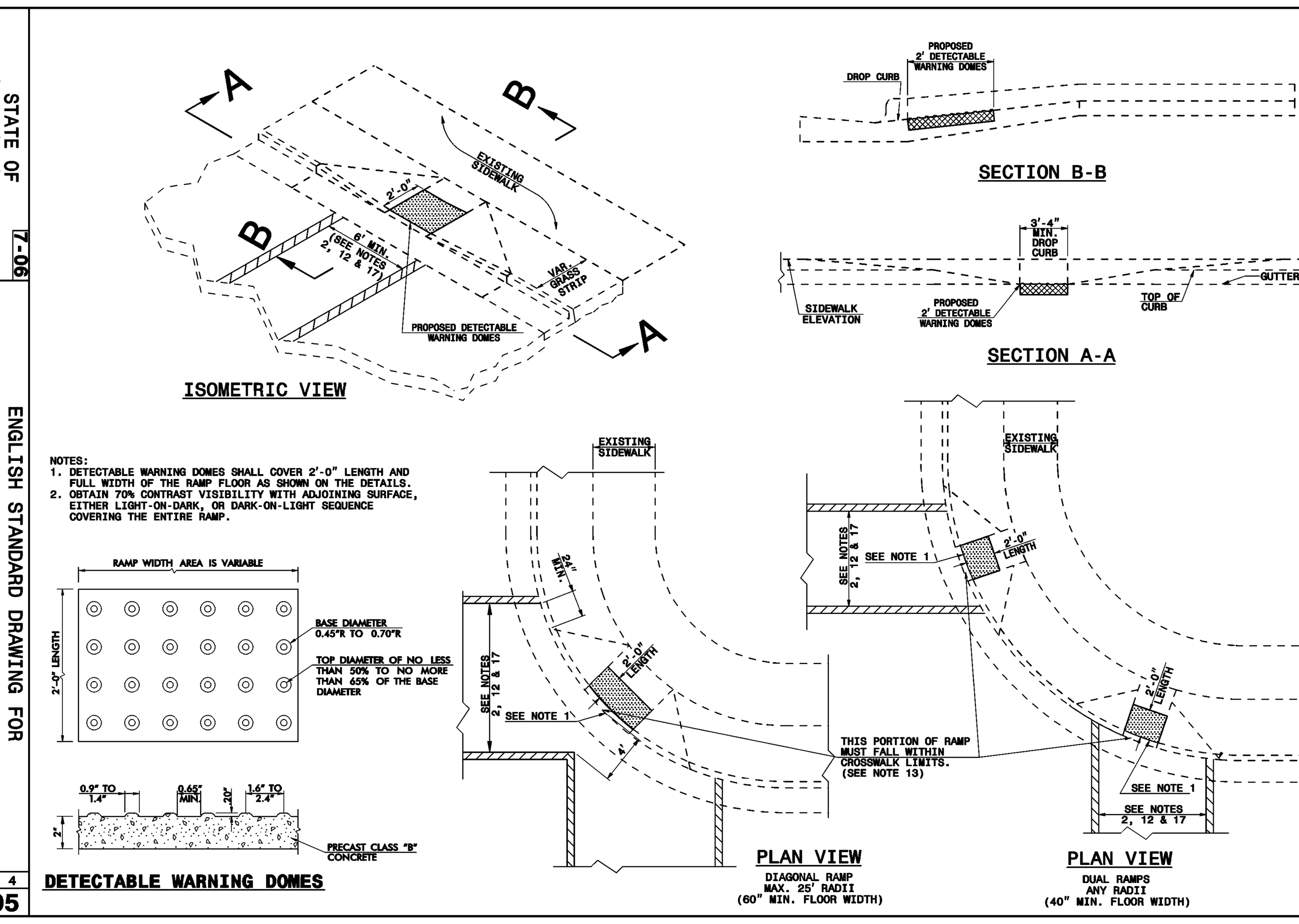

SHEET 2 OF 4 **848.05**

STATE OF NORTH CAROLINA DEPT. OF TRANSPORTATION DIVISION OF HIGHWAYS RALEIGH, N.C. 7-06

ENGLISH STANDARD DRAWING FOR **PAVEMENT MARKINGS** PEDESTRIAN CROSSWALKS

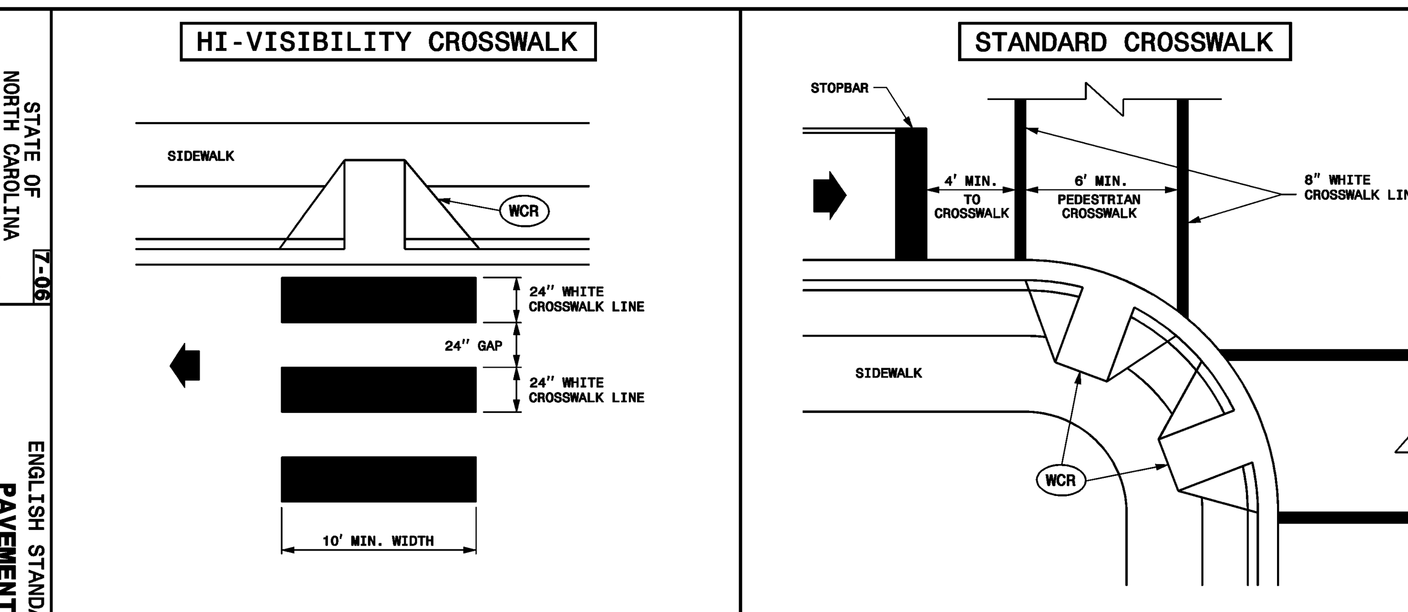

GENERAL NOTES

1- THE MINIMUM WIDTH OF STANDARD CROSSWALKS IS 6 FEET. THE MINIMUM WIDTH OF HI-VISIBILITY CROSSWALKS IS 10 FEET.
2- CENTER CROSSWALKS TO THEIR CORRESPONDING WHEELCHAIR RAMPS, BUT DO NOT SET THEM WITHIN THE INTERSECTION AREA ESTABLISHED BY BISECTING THE INTERSECTION RADII.
3- PLACE STOP BARS A MINIMUM OF 4 FEET FROM NEAREST CROSSWALK LINE, BUT NOT WITHIN THE AREA OF A WHEELCHAIR RAMP. PLACE STOP BARS PARALLEL TO CROSSWALK LINES, BUT CAN BE PLACED PERPINDICULAR TO TRAVEL LANES.
4- COORDINATE PLACEMENT OF CROSSWALKS IN ALL CASES WITH THE LOCATION OF WHEELCHAIR RAMPS. (SEE SIGNAL PLANS).

LEGEND

DIRECTION OF TRAFFIC FLOW
WCR WHEELCHAIR RAMP

SHEET 1 OF 1 **1205.07**

STATE OF NORTH CAROLINA DEPT. OF TRANSPORTATION DIVISION OF HIGHWAYS RALEIGH, N.C. 7-06

ENGLISH STANDARD DRAWING FOR **WHEELCHAIR RAMP** CURB CUT

NOTES:

1. CONSTRUCT THE WALKING SURFACE WITH SLIP RESISTANTANCE AND A 70% CONTRASTING COLOR TO THE SIDEWALK.
2. CROSSWALK WIDTHS AND CONFIGURATION VARY BUT MUST CONFORM TO TRAFFIC DESIGN STANDARDS.
3. NORTH CAROLINA GENERAL STATUTE 136-44.14 REQUIRES THAT ALL STREET CURBS BEING CONSTRUCTED OR RECONSTRUCTED FOR MAINTENANCE PROCEDURES, TRAFFIC OPERATIONS, REPAIRS, CORRECTION OF UTILTIES OR ALTERED FOR ANY REASON AFTER SEPTEMBER 1, 1973 SHALL PROVIDE WHEELCHAIR RAMPS FOR THE PHYSICALLY DISABLED AT ALL INTERSECTIONS WHERE BOTH CURB AND GUTTER AND SIDEWALKS ARE PROVIDED AND AT OTHER POINTS OF PEDESTRIAN FLOW.

   IN ADDITION, SECTION 228 OF THE 1973 FEDERAL AID HIGHWAY SAFETY ACT REQUIRES PROVISION OF CURB RAMPS ON ANY CURB CONSTRUCTION AFTER JULY 1,1976 WHETHER A SIDEWALK IS PROPOSED INITIALLY OR IS PLANNED FOR A FUTURE DATE.

   THE AMERICANS WITH DISABILITIES ACT (ADA) OF 1990 EXTENDS TO INDIVIDUALS WITH DISABILITIES. COMPREHENSIVE CIVIL RIGHTS PROTECTIONS SIMILIAR TO THOSE PROVIDED TO PERSONS ON THE BASIS OF RACE, SEX, NATIONAL ORIGIN AND RELIGION UNDER THE CIVIL RIGHTS ACT OF 1964. THESE CURB RAMPS HAVE BEEN DESIGNED TO COMPLY WITH THE CURRENT ADA STANDARDS.
4. PROVIDE WHEELCHAIR RAMPS AT LOCATIONS AS SHOWN ON THE PLANS OR AS DIRECTED BY THE ENGINEER. LOCATE WHEELCHAIR RAMPS AS DIRECTED BY THE ENGINEER WHERE EXISTING LIGHT POLES, FIRE HYDRANTS, DROP INLETS, ETC. AFFECT PLACEMENT. WHERE TWO RAMPS ARE INSTALLED PLACE NOT LESS THAN 2 FEET OF FULL HEIGHT CURB BETWEEN THE RAMPS. PLACE DUAL RAMPS AS NEAR PERPENDICULAR TO THE TRAVEL LANE BEING CROSSED AS POSSIBLE.
5. PAY FOR ALL VARIABLE DEPTH CONCRETE USED FOR CONSTRUCTION OF WHEELCHAIR RAMPS AS CONCRETE WHEELCHAIR RAMPS. (SQ. YDS.)
6. PAY FOR ALL DEPRESSED CURBS AT WHEELCHAIR RAMPS AS THE TYPE CURB AND GUTTER USED ADJACENT TO DEPRESSED CURB. (LN. FT.)
7. SUCH PRICES AND PAYMENTS IS CONSIDERED FULL COMPENSATION FOR ALL MATERIALS, LABOR, EQUIPMENT, TOOLS AND INCIDENTALS NECESSARY TO SATISFACTORILY COMPLETE THE WORK.
8. DO NOT EXCEED 0.08 (12:1) SLOPE ON THE WHEELCHAIR RAMP IN RELATIONSHIP TO THE GRADE OF THE STREET.
9. CONSTRUCT WHEELCHAIR RAMPS 40" (3'-4") OR GREATER FOR DUAL RAMPS.
10. USE CLASS "B" CONCRETE WITH A SIDEWALK FINISH IN ORDER TO OBTAIN A ROUGH NON-SKID TYPE SURFACE.
11. PLACE A ½" EXPANSION JOINT WHERE THE CONCRETE WHEELCHAIR RAMP JOINS THE CURB AND AS SHOWN ON STD. DWG. 848.01.
12. PLACE THE INSIDE PEDESTRIAN CROSSWALK LINES NO CLOSER IN THE INTERSECTION BY BISECTING THE INTERSECTION RADII, WITH ALLOWANCE OF A 4' CLEAR ZONE IN THE VEHICULAR TRAVELWAY WHEN ONE RAMP IS INSTALLED. (SEE NOTE 17)
13. COORDINATE THE CURB CUT AND THE PEDESTRIAN CROSSWALK LINES SO THE FLOOR OF THE WHEELCHAIR RAMP WILL FALL WITHIN THE PEDESTRIAN CROSSWALK LINES. PLACE DIAGONAL RAMPS WITH FLARED SIDES SO 24" OF FULL HEIGHT CURB FALLS WITHIN THE CROSSWALK MARKINGS ON EACH SIDE OF THE FLARES.
14. CONSTRUCT THE PEDESTRIAN CROSSWALK A MINIMUM OF 6 FEET. A CROSSWALK WIDTH OF 10 FEET OR GREATER IS DESIRABLE.
15. USE STOP LINES, NORMALLY PERPENDICULAR TO THE LANE LINES, WHERE IT IS IMPORTANT TO INDICATE THE POINT BEHIND WHICH VEHICLES ARE REQUIRED TO STOP IN COMPLIANCE WITH A TRAFFIC SIGNAL, STOP SIGN OR OTHER LEGAL REQUIREMENT. AN UNUSUAL APPROACH SKEW MAY REQUIRE THE PLACEMENT OF THE STOP LINE TO BE PARALLEL TO THE INTERSECTING ROADWAY.
16. TERMINATE PARKING A MINIMUM OF 20 FEET BACK OF PEDESTRIAN CROSSWALK.
17. PLACE ALL PAVEMENT MARKINGS IN ACCORDANCE WITH THE LATEST EDITION OF THE MANUAL OF UNIFORM TRAFFIC CONTROL DEVICES (MUTCD) PUBLISHED BY THE FEDERAL HIGHWAY ADMINISTRATION AND THE NORTH CAROLINA SUPPLEMENT TO THE MUTCD.

SHEET 4 OF 4 **848.05**

STATE OF NORTH CAROLINA DEPT. OF TRANSPORTATION DIVISION OF HIGHWAYS RALEIGH, N.C. 7-06

ENGLISH STANDARD DRAWING FOR **WHEELCHAIR RAMP** CURB CUT

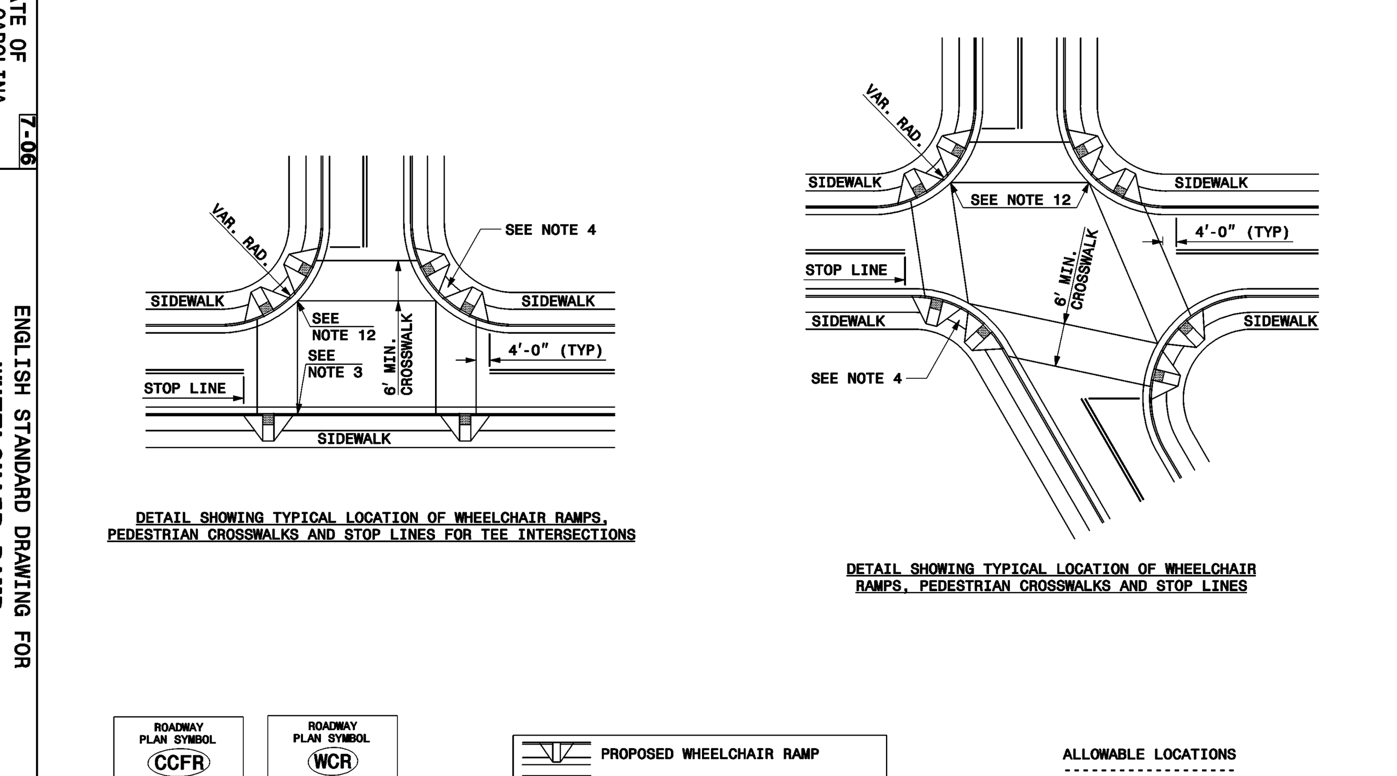

ALLOWABLE LOCATIONS
DUAL RAMP RADII...........ANY

SHEET 3 OF 4 **848.05**

STATE OF NORTH CAROLINA DEPT. OF TRANSPORTATION DIVISION OF HIGHWAYS RALEIGH, N.C. 7-06

ENGLISH STANDARD DRAWING FOR **METHOD FOR PLACEMENT OF DROP INLETS IN CONCRETE ISLANDS**

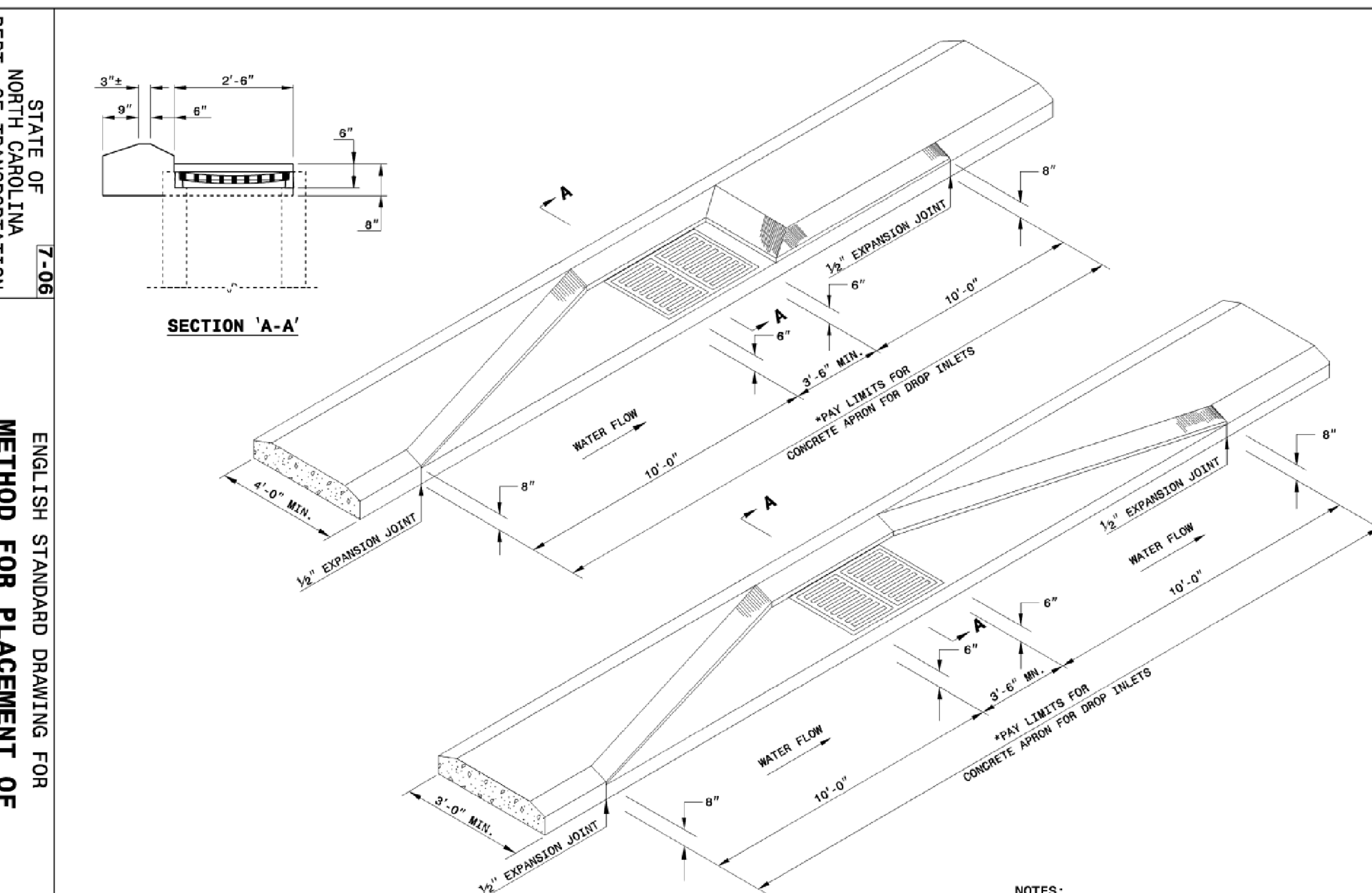

NOTES:
-REFER TO STD. NO. 840.14 AND 840.15 FOR DRAINAGE STRUCTURE.
-REFER TO STD. NO. 840.16 FOR GRATE AND FRAME.

*CONCRETE APRON IS INCIDENTAL TO CONSTRUCTION OF THE DRAINAGE STRUCTURE

SHEET 1 OF 1 **852.06**

REV.NO.	DESCRIPTIONS	DATE
	REVISIONS	

SEAL

243 North Front Street
Wilmington, North Carolina 28401
Phone: (910)343-1048 , Fax: (910)251-8282
License: F-1222
www.mckimcreed.com

Newland COMMUNITIES

RIVER ROAD

ROADWAY DETAILS

DATE: SEPTEMBER 2014
MCE PROJ. # 2735-0007
DRAWN
DESIGNED
CHECKED RMC
PROJ. MGR. RMC

SCALE
HORIZONTAL: 1"=40'
VERTICAL: N/A

M&C FILE NUMBER CT-502
DRAWING NUMBER 21

STATUS: FINAL DESIGN PLANS
REVISION

S:\2735\0007\80-Drawings\CT502-27350007.dwg, 10/3/2014 12:16:49 PM, rlauretta, ANSI D (22.00 x 34.00 Inches), 1:1

STD. 838.01 — SHEET 1 OF 3

STATE OF NORTH CAROLINA DEPT. OF TRANSPORTATION DIVISION OF HIGHWAYS RALEIGH, N.C. 7-06

ENGLISH STANDARD DRAWING FOR CONCRETE ENDWALL FOR SINGLE AND DOUBLE PIPE CULVERTS 15" THRU 48" PIPE - 90° SKEW

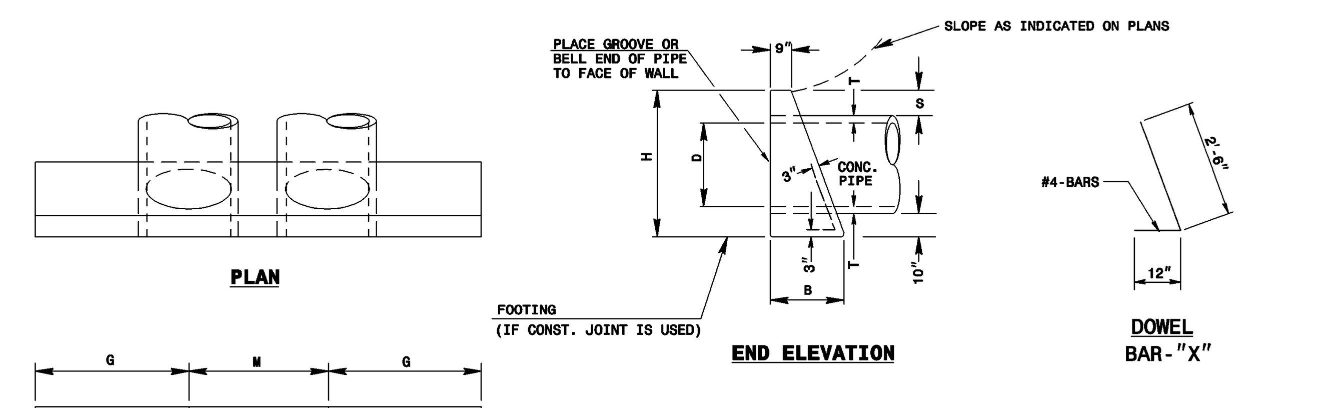

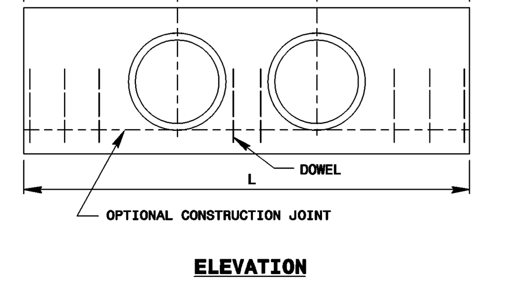

DOWELS IN ENDWALL WITH REINFORCED CONCRETE PIPE																			
LOC.	PIPE	SINGLE PIPE									DOUBLE PIPE								
	DIA.	15"	18"	24"	30"	36"	42"		48"		15"	18"	24"	30"	36"	42"		48"	
	BARS	"X"	"X"	"X"	"X"	"X"	"X"	Y*	"X"	Y*	"X"	"X"	"X"	"X"	"X"	"X"	Y*	"X"	Y*
G	QTY.	2	2	3	3	4	4	2	5	2	2	2	3	3	4	4	2	5	2
M	QTY.	-	-	-	-	-	-		-		1	1	2	2	2	2		3	
G	QTY.	2	2	3	3	4	4		5		2	2	3	3	4	4		5	
TOTAL LBS.		9	9	14	14	19	55		65		12	12	19	19	23	77		92	

DIMENSIONS AND CONCRETE QUANTITIES USING CONCRETE PIPE										
	COMMON DIMENSIONS					SINGLE PIPE		DOUBLE PIPE		
D	H	B	G	T	S	L	YD^3	M	L	YD^3
15"	3'-3"	1'-8"	2'-9"	2¼"	9½"	5'-6"	0.7	2'-2"	7'-8"	1.0
18"	3'-7"	1'-10"	3'-2"	2½"	10"	6'-4"	1.0	2'-7"	8'-11"	1.3
24"	4'-2"	2'-1"	4'-0"	3"	10"	8'-0"	1.5	3'-5"	11'-5"	2.0
30"	5'-0"	2'-6"	4'-7"	4¼"	11½"	9'-2"	2.3	4'-3"	13'-5"	3.1
36"	5'-8"	2'-8"	5'-6"	4¾"	11½"	11'-0"	3.4	5'-0"	16'-0"	4.5
42"	6'-2"	3'-1"	6'-4"	5¼"	11½"	12'-8"	4.5	5'-10"	18'-6"	6.0
48"	6'-9"	3'-5"	7'-2"	5¾"	11½"	14'-4"	6.0	6'-8"	21'-0"	8.0

*SEE SHEET 3

SHEET 1 OF 3 838.01

STD. 838.01 — SHEET 2 OF 3

STATE OF NORTH CAROLINA DEPT. OF TRANSPORTATION DIVISION OF HIGHWAYS RALEIGH, N.C. 7-06

ENGLISH STANDARD DRAWING FOR CONCRETE ENDWALL FOR SINGLE AND DOUBLE PIPE CULVERTS 15" THRU 48" PIPE - 90° SKEW

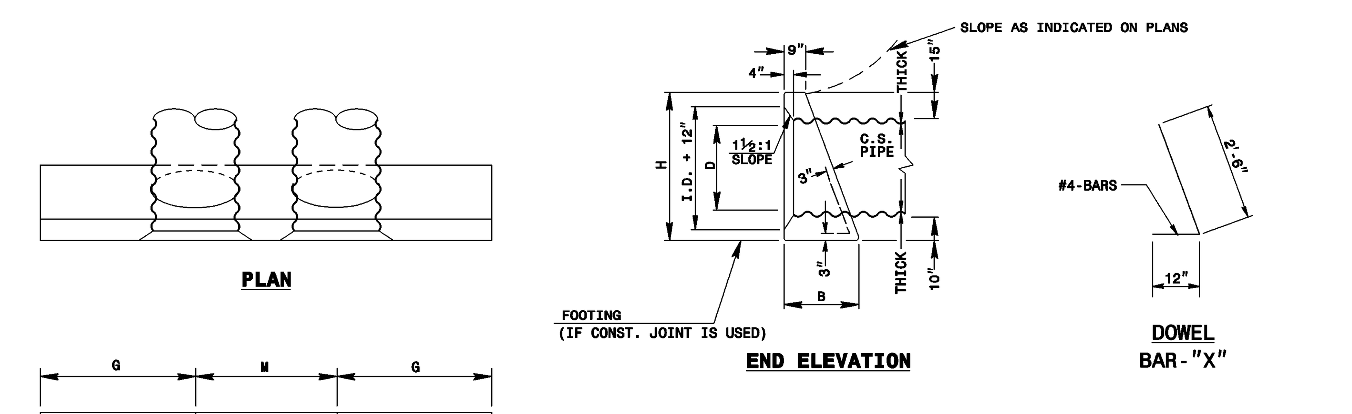

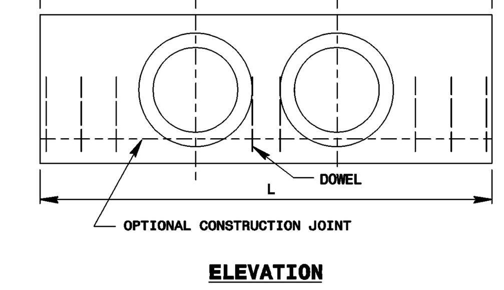

DOWELS IN ENDWALL WITH C. S. PIPE																			
LOC.	PIPE	SINGLE PIPE									DOUBLE PIPE								
	DIA.	15"	18"	24"	30"	36"	42"		48"		15"	18"	24"	30"	36"	42"		48"	
	BARS	"X"	"X"	"X"	"X"	"X"	"X"	Y*	"X"	Y*	"X"	"X"	"X"	"X"	"X"	"X"	Y*	"X"	Y*
G	QTY.	2	2	3	3	4	4	2	5	2	2	2	3	3	4	4	2	5	2
M	QTY.	-	-	-	-	-	-		-		1	1	1	2	2	2		2	
G	QTY.	2	2	3	3	4	4		5		2	2	3	3	4	4		5	
TOTAL LBS.		9	9	14	14	19	53		62		12	12	16	19	23	73		85	

DIMENSIONS AND CONCRETE QUANTITIES USING CORRUGATED STEEL PIPE								
	COMMON			SINGLE PIPE		DOUBLE PIPE		
D	H	B	G	L	YD^3	M	L	YD^3
15"	3'-4"	1'-8"	2'-6"	5'-0"	0.7	1'-11"	6'-11"	1.0
18"	3'-7"	1'-10"	2'-11"	5'-10"	1.0	2'-3"	8'-1"	1.2
24"	4'-1"	2'-1"	3'-8"	7'-4"	1.4	3'-0"	10'-4"	1.9
30"	4'-7"	2'-4"	4'-5"	8'-10"	2.0	3'-9"	12'-7"	2.7
36"	5'-1"	2'-7"	5'-2"	10'-4"	2.8	4'-6"	14'-10"	3.8
42"	5'-7"	2'-10"	5'-11"	11'-10"	3.8	5'-3"	17'-1"	5.0
48"	6'-1"	3'-1"	6'-8"	13'-4"	4.9	6'-0"	19'-4"	7.5

*SEE SHEET 3

SHEET 2 OF 3 838.01

STD. 838.01 — SHEET 3 OF 3

STATE OF NORTH CAROLINA DEPT. OF TRANSPORTATION DIVISION OF HIGHWAYS RALEIGH, N.C. 7-06

ENGLISH STANDARD DRAWING FOR CONCRETE ENDWALL FOR SINGLE AND DOUBLE PIPE CULVERTS 15" THRU 48" PIPE - 90° SKEW

GENERAL NOTES:

CHAMFER ALL CORNERS 1" OR HAVE A RADIUS OF 1".

PLACE 2 #6 "Y" BARS IN THE TOP OF ALL ENDWALL FOR PIPE CULVERTS 42" AND OVER WITH A MINIMUM OF 3" COVER AND A LENGTH OF 6" LESS THAN ENDWALL LENGTH.

CONSTRUCT BOTTOM SLAB WITH FORMS.

DO NOT INTERPRET WALL THICKNESS (T) SHOWN FOR THE THICKNESS ACCEPTABLE, BUT IS USED IN COMPUTING ENDWALL QUANTITIES.

WHEN THE CONTRACTOR ELECTS TO USE A CONSTRUCTION JOINT AT THE BOTTOM OF THE PIPE, PLACE BAR "X" DOWELS IN THE BASE AS SHOWN ON PLANS. SPACE BARS APPROXIMATELY ON 12" CENTERS UNLESS OTHERWISE DIRECTED BY THE ENGINEER.

WHEN THE CONTRACTOR ELECTS TO USE A CONSTRUCTION JOINT AT THE BOTTOM OF THE PIPE AND POUR THE BASE SEPARATELY LEAVE THE POUR ROUGH.

USE CLASS "B" CONCRETE.

SHEET 3 OF 3 838.01

STD. 838.05 — SHEET 1 OF 1

STATE OF NORTH CAROLINA DEPT. OF TRANSPORTATION DIVISION OF HIGHWAYS RALEIGH, N.C. 7-06

ENGLISH STANDARD DRAWING FOR CONCRETE "L" ENDWALL FOR SINGLE PIPE CULVERTS 15" THRU 48" PIPE

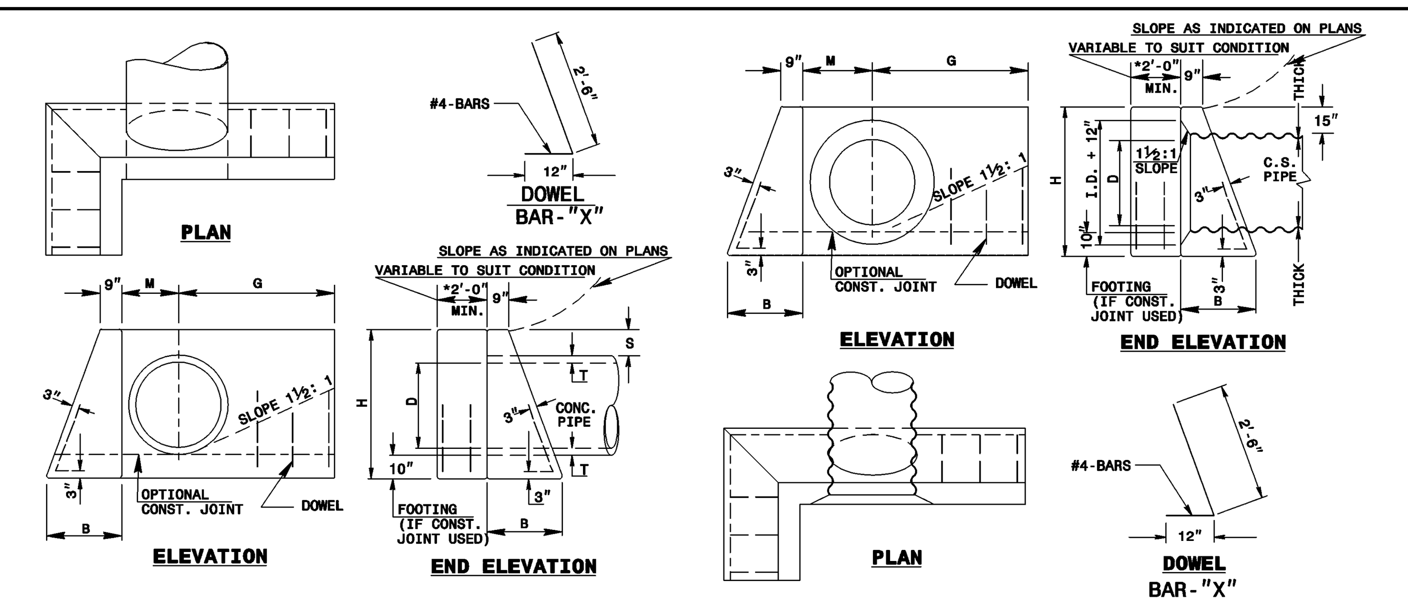

GENERAL NOTES:
- CHAMFER ALL CORNERS 1". USE CLASS "B" CONCRETE.
- PLACE 2 #6 "Y" BARS IN THE TOP OF ALL ENDWALL FOR PIPE CULVERTS 42" AND OVER WITH A MINIMUM OF 3" COVER AND A LENGTH OF 6" LESS THAN ENDWALL LENGTH.
- CONSTRUCT BOTTOM SLAB WITH FORMS.
- WHEN THE CONTRACTOR ELECTS TO USE A CONSTRUCTION JOINT AT THE BOTTOM OF THE PIPE, PLACE BAR "X" DOWELS IN THE BASE AS SHOWN ON PLANS. SPACE BARS APPROXIMATELY ON 12" CENTERS UNLESS OTHERWISE DIRECTED BY THE ENGINEER.
- WHEN THE CONTRACTOR ELECTS TO USE A CONSTRUCTION JOINT AT THE BOTTOM OF THE PIPE AND POUR THE BASE SEPARATELY LEAVE THE POUR ROUGH.
- DO NOT INTERPRET WALL THICKNESS (T) SHOWN FOR THE THICKNESS ACCEPTABLE, BUT IS USED IN COMPUTING ENDWALL QUANTITIES.

REINFORCING QUANTITIES													
DIA.	15"	18"	24"	30"	36"	42" C.S.		42" R.C.		48" C.S.		48" R.C.	
BARS	"X"	"X"	"X"	"X"	"X"	"X"	"Y"	"X"	"Y"	"X"	"Y"	"X"	"Y"
QTY.	5	5	6	6	7	7	2	7	2	8	2	8	2
LBS.	12	12	14	14	16	47		49		52		55	

*QUANTITIES BASED ON 2'-0"

DIMENSIONS AND CONCRETE QUANTITIES													
	R.C.P. DIMENSIONS AND VOLUMES							C.S.P. DIMENSIONS AND VOLUMES					
D	H	B	G	M	S	T	YD^3	H	B	G	M	YD^3
15"	3'-4"	1'-8"	2'-6"	1'-1"	10½"	2¼"	1.0	3'-4"	1'-8"	2'-5"	1'-5"	1.0
18"	3'-7"	1'-10"	2'-11"	1'-3"	10"	2½"	1.2	3'-7"	1'-10"	2'-9"	1'-6"	1.3
24"	4'-2"	2'-1"	3'-9"	1'-6"	10"	3"	1.7	4'-1"	2'-1"	3'-6"	1'-9"	1.8
30"	4'-9"	2'-5"	4'-8"	1'-10"	10"	3½"	2.5	4'-7"	2'-4"	4'-3"	2'-0"	2.4
36"	5'-5"	2'-9"	5'-8"	2'-2"	9½"	4¾"	3.6	5'-1"	2'-7"	5'-0"	2'-3"	3.1
42"	6'-0"	3'-0"	6'-7"	2'-5"	9½"	5¼"	4.6	5'-7"	2'-10"	5'-9"	2'-6"	4.0
48"	6'-7"	3'-4"	7'-5"	2'-9"	9½"	5¾"	6.0	6'-1"	3'-1"	6'-6"	2'-9"	5.1

SHEET 1 OF 1 838.05

STD. 840.19 — SHEET 1 OF 1

STATE OF NORTH CAROLINA DEPT. OF TRANSPORTATION DIVISION OF HIGHWAYS RALEIGH, N.C. 1-12

ENGLISH STANDARD DRAWING FOR CONCRETE GRATED DROP INLET TYPE 'D' 12" THRU 36" PIPE

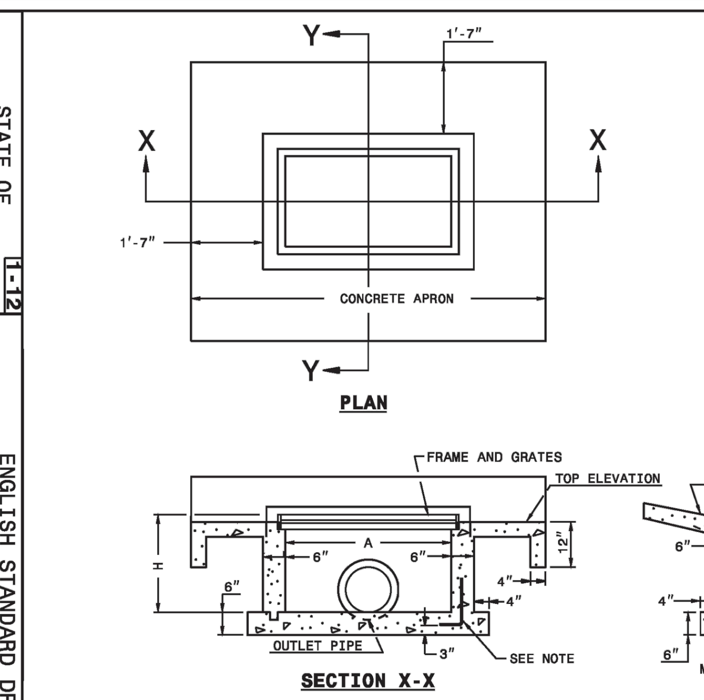

GENERAL NOTES:

USE CLASS "B" CONCRETE THROUGHOUT.

PROVIDE ALL DROP INLETS OVER 3'-6" IN DEPTH WITH STEPS 12" ON CENTER. USE STEPS WHICH COMPLY WITH STD. DRAWING 840.66.

OPTIONAL CONSTRUCTION - MONOLITHIC POUR, 2" KEYWAY, OR #4 BAR DOWELS AT 12" CENTERS AS DIRECTED BY THE ENGINEER.

USE FORMS FOR THE CONSTRUCTION OF THE BOTTOM SLAB.

IF REINFORCED CONCRETE PIPE IS SET IN BOTTOM SLAB OF BOX, ADD TO SLAB AS SHOWN ON STD. NO. 840.00.

CONSTRUCT WITH PIPE CROWNS MATCHING.

MAX. DEPTH OF THIS STRUCTURE FROM TOP OF BOTTOM SLAB TO TOP ELEVATION IS 12 FEET.

USE STANDARD FRAMES AND GRATES 840.22 (SHOWN), 840.24(SHOWN), 840.20, 840.29, AND 840.33.

SEE STANDARD DRAWING 840.25 FOR ATTACHMENT OF FRAMES AND GRATES NOT SHOWN.

CHAMFER ALL EXPOSED CORNERS 1".

DRAWING NOT TO SCALE.

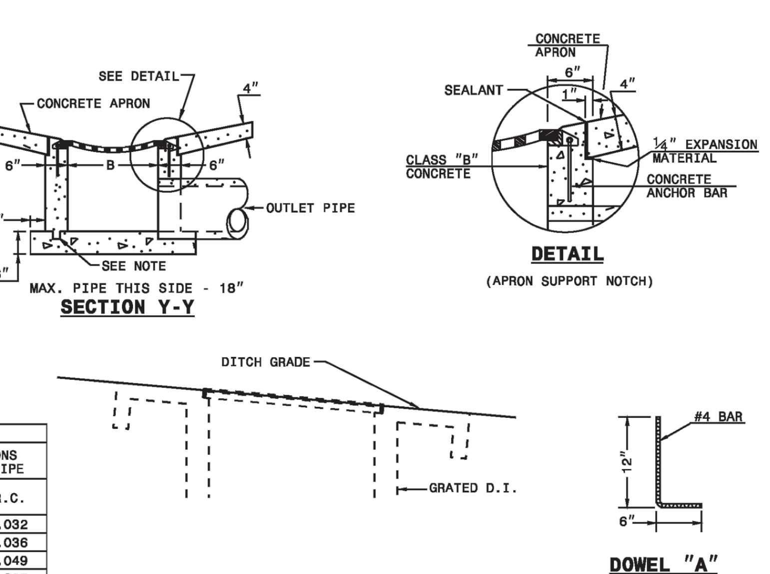

MINIMUM DIMENSIONS AND QUANTITIES FOR CONCRETE GRATED DROP INLET									
PIPE	SPAN	WIDTH	HEIGHT	CUBIC YARDS OF CONCRETE IN BOX				DEDUCTIONS FOR ONE PIPE	
D	A	B	H	BOTTOM SLAB	H PER FT. HT.	H MIN. TOTAL	TOTAL	C.S.	R.C.
12"	3'-8"	2'-0"	1'-8"	0.362	0.247	0.391	0.753	0.020	0.032
15"	3'-8"	2'-0"	1'-11"	0.362	0.247	0.453	0.815	0.023	0.036
18"	3'-8"	2'-0"	2'-2"	0.362	0.247	0.515	0.877	0.033	0.049
24"	3'-8"	2'-0"	2'-8"	0.362	0.247	0.659	1.021	0.059	0.085
30"	3'-8"	2'-0"	3'-2"	0.362	0.247	0.782	1.144	0.092	0.127
36"	3'-8"	2'-0"	3'-8"	0.362	0.247	0.906	1.268	0.132	0.178

SHEET 1 OF 1 840.19

STD. 840.20 — SHEET 1 OF 1

STATE OF NORTH CAROLINA DEPT. OF TRANSPORTATION DIVISION OF HIGHWAYS RALEIGH, N.C. 1-12

ENGLISH STANDARD DRAWING FOR FRAMES AND WIDE SLOT FLAT GRATES

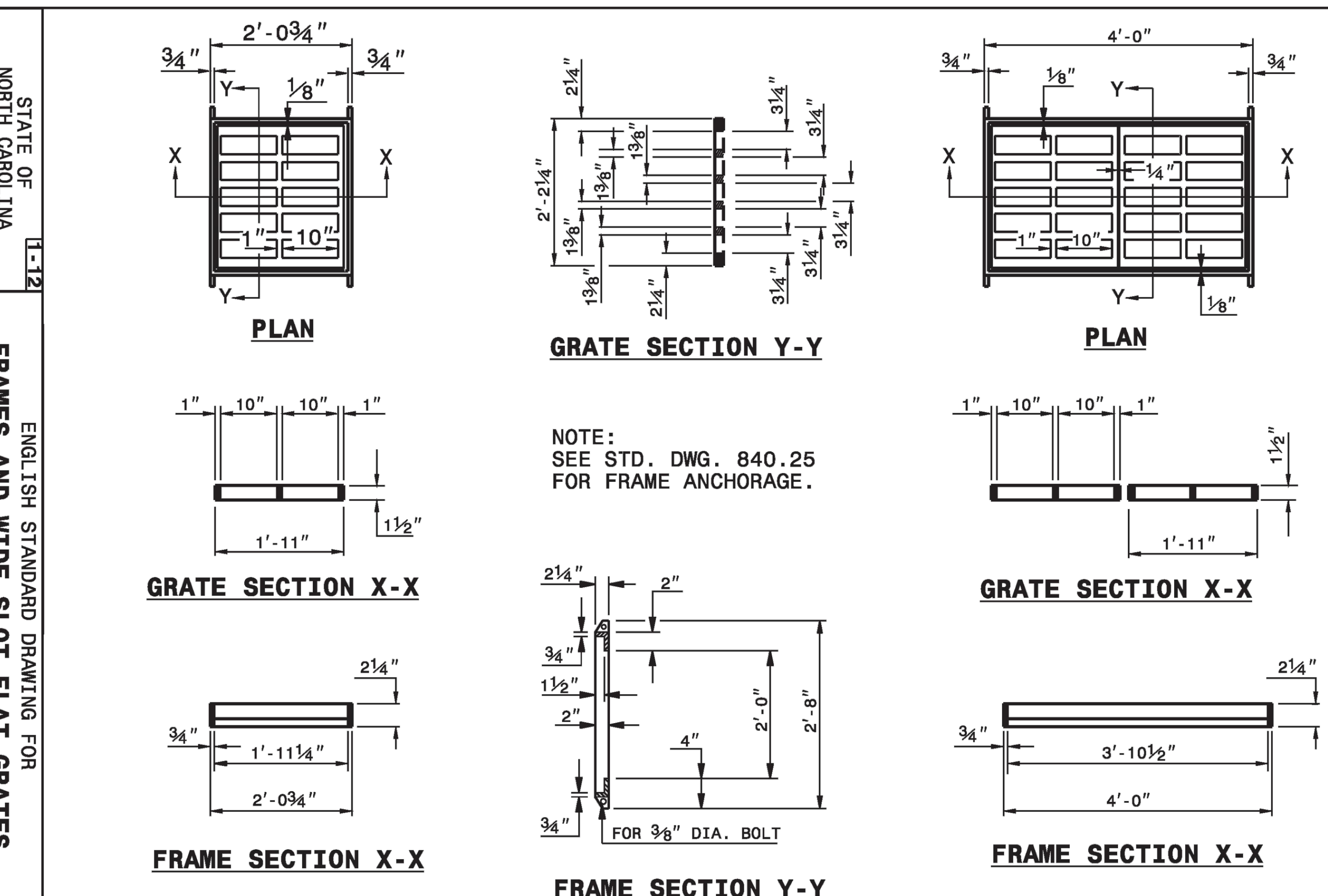

SHEET 1 OF 1 840.20

STD. 840.22 — SHEET 1 OF 1

STATE OF NORTH CAROLINA DEPT. OF TRANSPORTATION DIVISION OF HIGHWAYS RALEIGH, N.C. 1-12

ENGLISH STANDARD DRAWING FOR FRAMES AND WIDE SLOT SAG GRATES

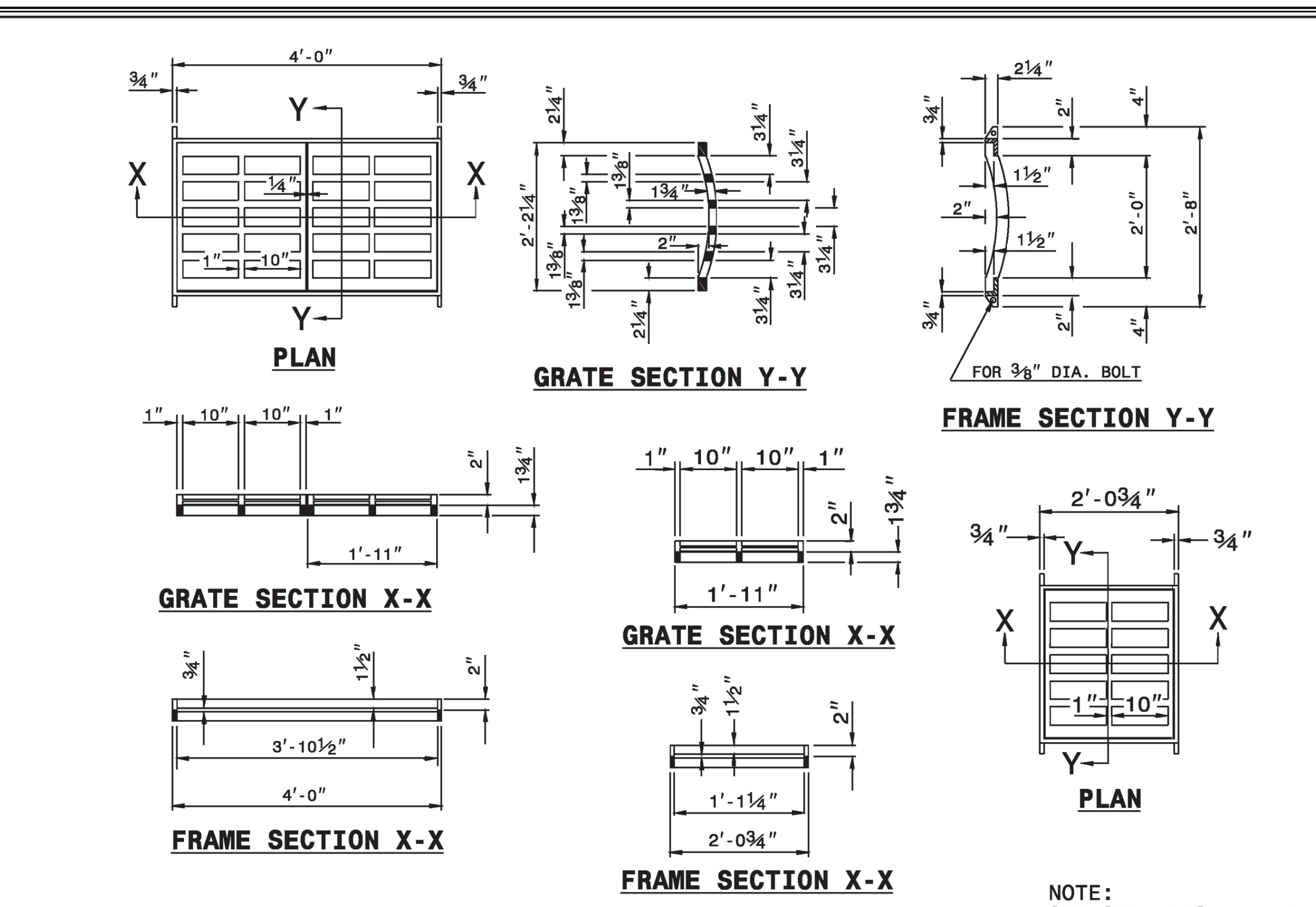

NOTE:
SEE STD. DWG. 840.25
FOR FRAME ANCHORAGE.

SHEET 1 OF 1 840.22

STD. 840.26 — SHEET 1 OF 2

STATE OF NORTH CAROLINA DEPT. OF TRANSPORTATION DIVISION OF HIGHWAYS RALEIGH, N.C. 1-12

ENGLISH STANDARD DRAWING FOR BRICK GRATED DROP INLET TYPE 'A' 12" THRU 72" PIPE

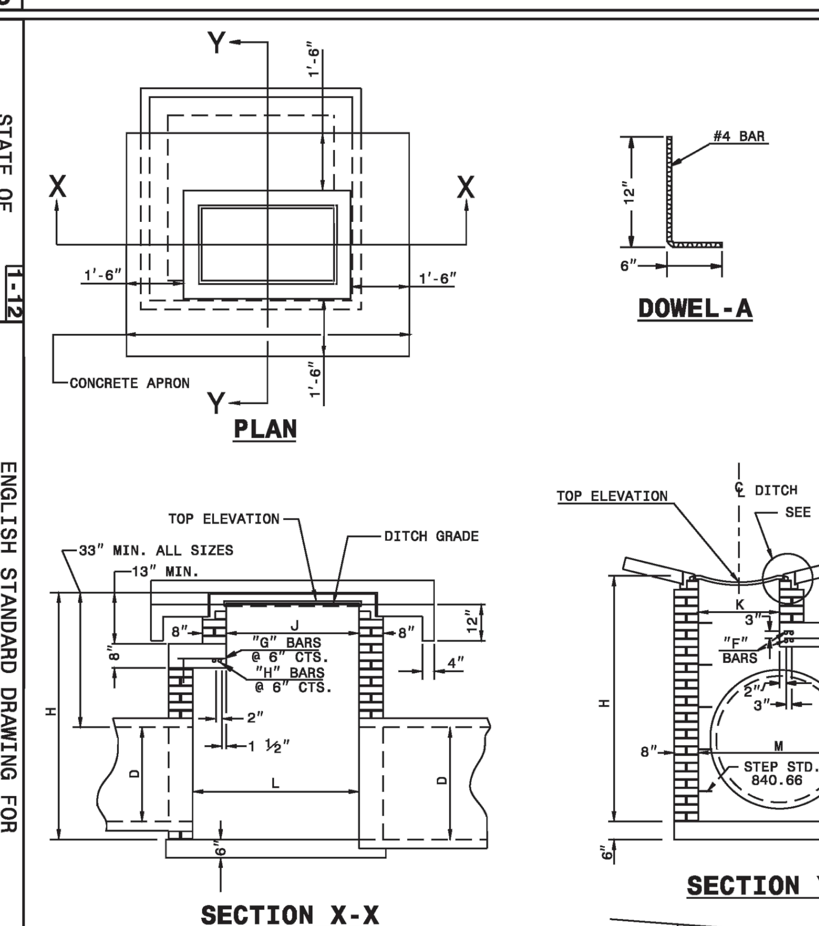

GENERAL NOTES:

USE CLASS "B" CONCRETE THROUGHOUT.

JUMBO BRICK WILL BE PERMITTED. CONCRETE BRICK OR 4" SOLID CONCRETE BLOCKS MAY BE USED IN LIEU OF CLAY BRICKS.

PROVIDE ALL DROP INLETS OVER 3'-6" IN DEPTH WITH STEPS 12" ON CENTER. USE STEPS WHICH COMPLY WITH STD. DRAWING 840.66.

USE #4 BAR DOWELS AT 12" CENTERS.

USE FORMS FOR THE CONSTRUCTION OF THE BOTTOM SLAB.

IF REINFORCED CONCRETE PIPE IS SET IN BOTTOM SLAB OF BOX, ADD TO SLAB AS SHOWN ON STD. NO. 840.00.

CONSTRUCT WITH PIPE CROWNS MATCHING.

MAX. DEPTH OF THIS STRUCTURE FROM TOP OF BOTTOM SLAB TO TOP ELEVATION IS 12 FEET.

USE STANDARD FRAMES AND GRATES 840.22 (SHOWN), 840.24(SHOWN), 840.20, 840.29, AND 840.33.

SEE STANDARD DRAWING 840.25 FOR ATTACHMENT OF FRAMES AND GRATES NOT SHOWN.

CHAMFER ALL EXPOSED CORNERS 1".

DRAWING NOT TO SCALE.

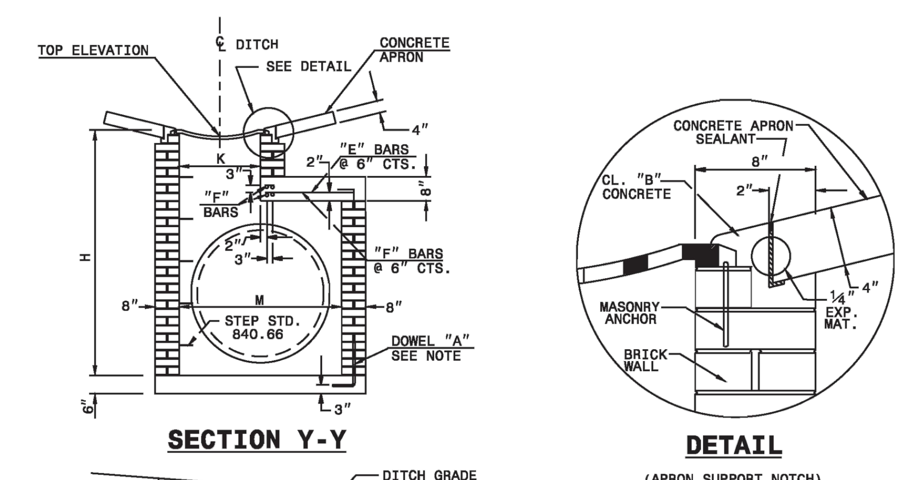

SHEET 1 OF 2 840.26

STD. 840.26 — SHEET 2 OF 2

STATE OF NORTH CAROLINA DEPT. OF TRANSPORTATION DIVISION OF HIGHWAYS RALEIGH, N.C. 1-12

ENGLISH STANDARD DRAWING FOR BRICK GRATED DROP INLET TYPE 'A' 12" THRU 72" PIPE

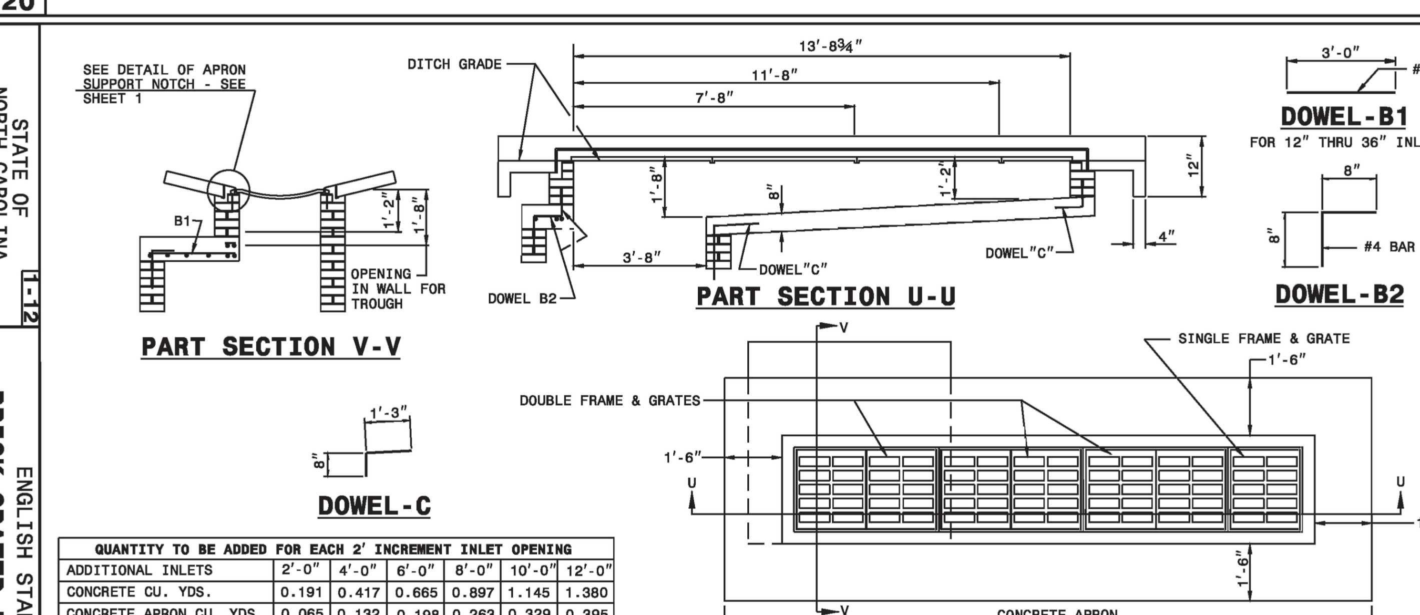

QUANTITY TO BE ADDED FOR EACH 2' INCREMENT INLET OPENING						
ADDITIONAL INLETS	2'-0"	4'-0"	6'-0"	8'-0"	10'-0"	12'-0"
CONCRETE CU. YDS.	0.191	0.417	0.665	0.897	1.145	1.380
CONCRETE APRON CU. YDS.	0.065	0.132	0.198	0.263	0.329	0.395

DIMENSIONS AND QUANTITIES FOR BRICK GRATED DROP INLET (BASED ON MIN. HEIGHT, H)

PIPE D	SPAN J	WIDTH K	SPAN L	WIDTH M	HEIGHT H	BARS E NO.	BARS E LENGTH	BARS F NO.	BARS F LENGTH	BARS G NO.	BARS G LENGTH	BARS H NO.	BARS H LENGTH	TOTAL LBS.	CU.YDS. CONC. IN BOX TOP SLAB	BOTTOM SLAB	APRON	TOTAL	CU.YDS. BRICK MASONRY IN BOX H TOTAL	H PER FT HT	BRICK AND CONC. TOTAL	DEDUCTIONS FOR ONE PIPE C.S.	R.C.
12"	3'-8"	2'-0"	3'-8"	2'-0"	3'-9"	—	—	—	—	—	—	—	—	—	—	0.308	0.351	0.659	1.301	0.346 ABOVE MIN H	1.960	0.020	0.032
15"	3'-8"	2'-0"	3'-8"	2'-0"	4'-0"	—	—	—	—	—	—	—	—	—	—	0.308	0.351	0.659	1.407		2.066	0.031	0.047
18"				2'-0"	4'-3"	—	—	—	—	—	—	—	—	—	—	0.308		0.659	1.471		2.130	0.044	0.065
24"				2'-10"	4'-9"	8	1'-3"	6	4'-9"	—	—	—	—	26	0.185	0.386		0.922	1.646	0.346	2.568	0.078	0.113
30"			3'-8"	3'-5"	5'-3"	8	1'-10"	7	4'-9"	—	—	—	—	32	0.301	0.410		1.062	1.936		2.998	0.122	0.170
36"			3'-10"	3'-10"	5'-9"	8	2'-3"	8	4'-10"	4	0'-7"	2	4'-11"	46	0.374	0.494		1.219	2.187		3.406	0.176	0.238
42"			4'-6"	4'-6"	6'-3"	10	2'-11"	9	5'-7"		1'-3"	3	5'-7"	68	0.555	0.630		1.536	2.717		4.253	0.240	0.323
48"			5'-0"	5'-0"	6'-9"	11	3'-5"	10	6'-1"		1'-9"	4	6'-1"	87	0.705	0.743		1.799	3.221	H	5.020	0.313	0.422
54"			5'-6"	5'-6"	7'-3"	12	3'-11"	11	6'-7"		2'-3"	5	6'-7"	108	0.868	0.865		2.084	3.786		5.870	0.396	0.535
60"			6'-2"	6'-2"	7'-9"	13	4'-7"	12	7'-3"		2'-11"	6	7'-3"	135	1.104	1.042		2.497	4.701		7.198	0.489	0.660
66"			6'-9"	6'-9"	8'-3"	14	5'-2"	14	7'-10"		3'-6"	7	7'-10"	168	1.328	1.210		2.889	5.189		8.078	0.591	0.798
72"	3'-8"	2'-0"	7'-4"	7'-4"	8'-9"	15	5'-9"	15	8'-5"	4	4'-1"	8	8'-5"	198	1.569	1.391	0.351	3.311	5.954	0.346	8.905	0.704	0.950

SHEET 2 OF 2 840.26

REV.NO.	DESCRIPTIONS	DATE

REVISIONS

SEAL

SEAL 022574 ENGINEER
10/03/2014

MCKIM&CREED
243 North Front Street
Wilmington, North Carolina 28401
Phone: (910)343-1048, Fax: (910)251-8282
License: F-1222
www.mckimcreed.com

Newland COMMUNITIES

NASH

RIVER ROAD

ROADWAY DETAILS

DATE:	SEPTEMBER 2014
MCE PROJ. #	2735-0007
DRAWN	
DESIGNED	
CHECKED	RMC
PROJ. MGR.	RMC

SCALE
HORIZONTAL: 1"=40'
VERTICAL: N/A

M&C FILE NUMBER CT-503
DRAWING NUMBER 22

STATUS: FINAL DESIGN PLANS
REVISION

S:\2735\0007\80-Drawings\CT503-27350007.dwg, 10/3/2014 12:45:48 PM, kespinoza, ANSI full bleed D (22.00 x 34.00 inches), 1:1

STATE OF NORTH CAROLINA
DEPT. OF TRANSPORTATION
DIVISION OF HIGHWAYS
RALEIGH, N.C.
7-06

ENGLISH STANDARD DRAWING FOR CONCRETE GRATED DROP INLET TYPE 'A' 12" THRU 72" PIPE

SHEET 1 OF 2
840.17

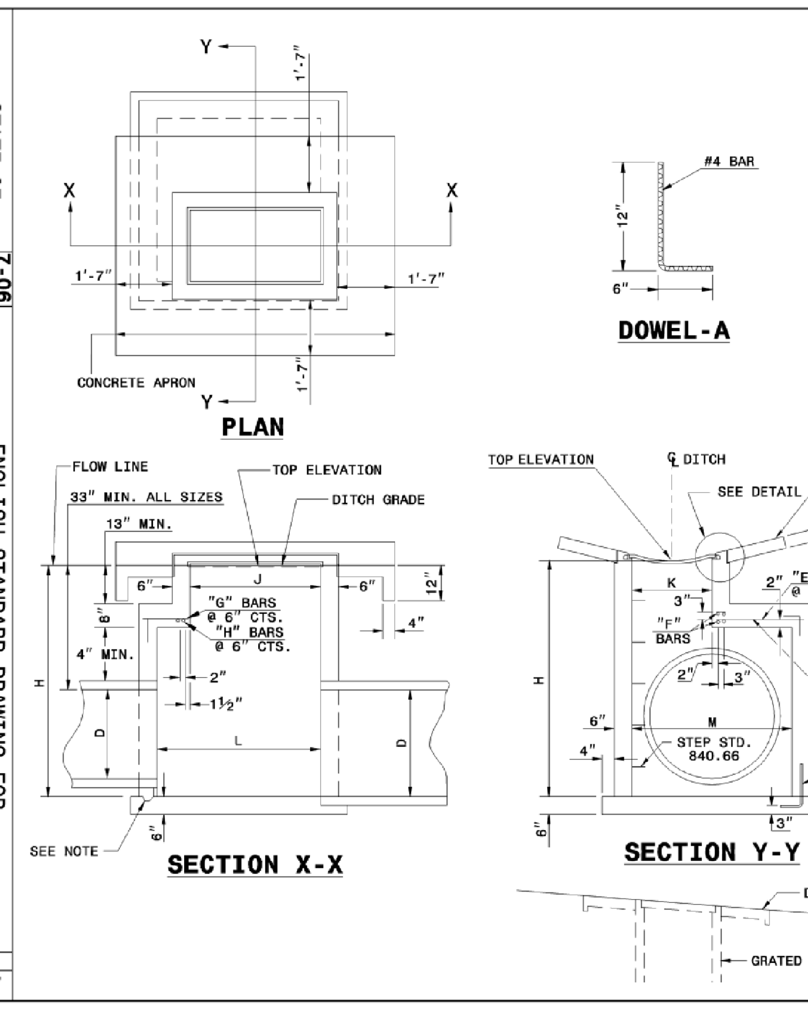

GENERAL NOTES:

USE CLASS "B" CONCRETE THROUGHOUT.

PROVIDE ALL GRATED DROP INLETS OVER 3'-6" IN DEPTH WITH STEPS 12" ON CENTER. USE STEPS WHICH COMPLY WITH STD. DRAWING 840.66.

OPTIONAL CONSTRUCTION - MONOLITHIC POUR, 2" KEYWAY, OR #4 BAR DOWELS AT 12" CENTERS AS DIRECTED BY THE ENGINEER.

USE FORMS FOR THE CONSTRUCTION OF THE BOTTOM SLAB.

IF REINFORCED CONCRETE PIPE IS SET IN BOTTOM SLAB OF BOX, ADD TO SLAB AS SHOWN ON STD. NO. 840.00.

CONSTRUCT WITH PIPE CROWNS MATCHING.

USE STANDARD FRAMES AND GRATES 840.22 (SHOWN), 840.24(SHOWN), 840.20 (NOT SHOWN) OR 840.29 (NOT SHOWN).

SEE STANDARD DRAWING 840.25 FOR ATTACHMENT OF FRAMES AND GRATES.

CHAMFER ALL EXPOSED CORNERS 1".

DRAWING NOT TO SCALE.

MAX. DEPTH OF THIS STRUCTURE FROM TOP OF BOTTOM SLAB TO TOP ELEVATION IS 12 FEET.

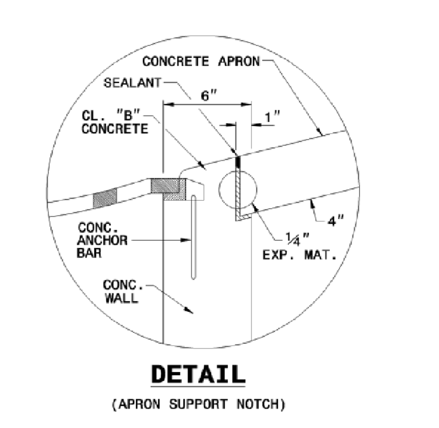

STATE OF NORTH CAROLINA
DEPT. OF TRANSPORTATION
DIVISION OF HIGHWAYS
RALEIGH, N.C.
7-06

ENGLISH STANDARD DRAWING FOR CONCRETE GRATED DROP INLET TYPE 'A' 12" THRU 72" PIPE

SHEET 2 OF 2
840.17

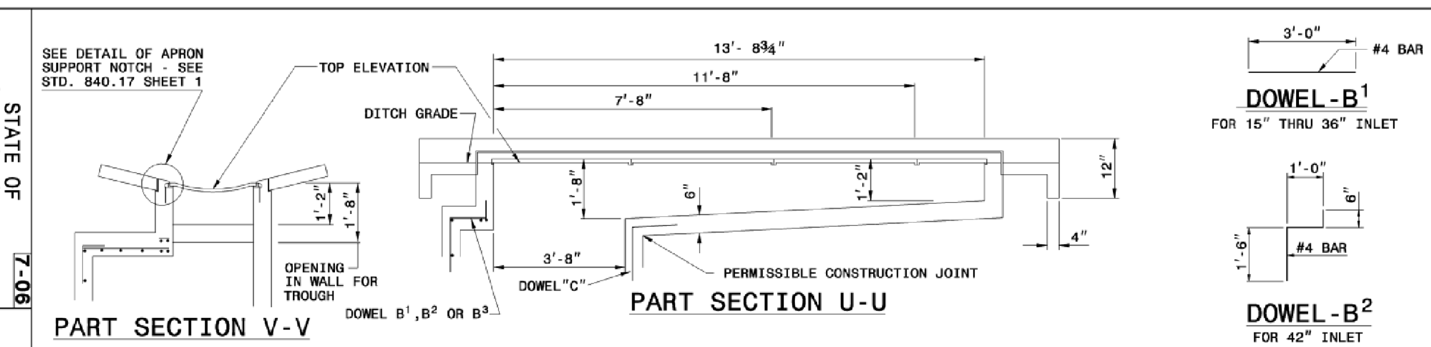

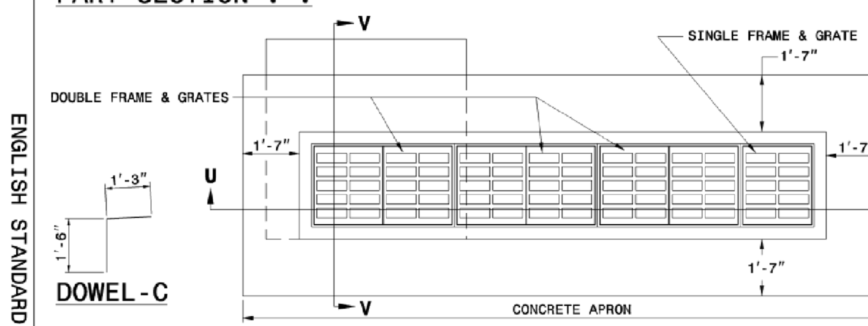

QUANTITY TO BE ADDED FOR EACH 2' INCREMENT INLET OPENING						
ADDITIONAL INLETS	2'-0"	4'-0"	6'-0"	8'-0"	10'-0"	12'-0"
CONCRETE CU. YDS.	0.191	0.417	0.665	0.897	1.145	1.380
CONCRETE APRON CU. YDS.	0.074	0.148	0.222	0.296	0.370	0.444

MIN. DIMENSIONS AND QUANTITIES FOR CONCRETE GRATED DROP INLET(BASED ON MIN. HEIGHT, H)

DIMENSIONS OF BOX AND PIPE						REINFORCING STEEL - NO. 4 BARS									CU YDS CONC. IN BOX					DEDUCTIONS FOR ONE PIPE	
PIPE	SPAN	WIDTH	SPAN	WIDTH	HEIGHT	BARS E		BARS F		BARS G		BARS H		TOTAL	BOTTOM SLAB	H TOTAL	H PER FT HT	APRON	TOTAL		
D	J	K	L	M	H	NO.	LENGTH	NO.	LENGTH	NO.	LENGTH	NO.	LENGTH	LBS.						C.S.	R.C.
12"	3'-8"	2'-0"	3'-8"	2'-0"	3'-9"	—	—	—	—	—	—	—	—	—	0.362	0.926	0.247	0.395	1.683	0.015	0.024
15"	3'-8"	2'-0"	3'-8"	2'-0"	4'-0"	—	—	—	—	—	—	—	—	—	0.362	0.988	0.247	0.395	1.745	0.023	0.036
18"				2'-0"	4'-3"	—	—	—	—	—	—	—	—	—	0.362	1.050	0.247		1.807	0.033	0.049
24"				2'-10"	4'-9"	8	1'-5"	6	4'-9"	—	—	—	—	27	0.444	1.362	0.278		2.201	0.059	0.085
30"			3'-8"	3'-5"	5'-3"	8	2'-0"	7	4'-9"	—	—	—	—	33	0.502	1.644	0.288		2.541	0.092	0.127
36"			4'-0"	4'-0"	5'-9"	8	2'-5"	8	4'-11"	4	0'-9"	2	4'-11"	47	0.560	1.931	0.321		2.920	0.132	0.178
42"			4'-10"	4'-10"	6'-3"	10	3'-1"	9	5'-7"		1'-5"	3	5'-7"	67	0.704	2.500	0.370		3.677	0.180	0.243
48"			5'-4"	5'-4"	6'-9"	11	3'-7"	10	6'-1"		1'-11"	4	6'-1"	87	0.823	3.013	0.407		4.315	0.235	0.317
54"			6'-0"	6'-0"	7'-3"	12	4'-1"	11	6'-7"		2'-5"	5	6'-7"	107	0.951	3.589	0.444		5.072	0.297	0.401
60"			6'-6"	6'-6"	7'-9"	13	4'-9"	12	7'-3"		3'-1"	6	7'-3"	135	1.311	4.539	0.494		6.170	0.367	0.495
66"			7'-2"	7'-2"	8'-3"	14	5'-4"	14	7'-10"		3'-7"	7	7'-10"	168	1.136	5.061	0.537		6.901	0.444	0.599
72"	3'-8"	2'-0"	7'-8"	7'-8"	8'-9"	15	5'-11"	15	8'-5"	4	4'-3"	8	8'-5"	199	1.500	5.860	0.580	0.395	7.868	0.528	0.713

STATE OF NORTH CAROLINA
DEPT. OF TRANSPORTATION
DIVISION OF HIGHWAYS
RALEIGH, N.C.
7-06

ENGLISH STANDARD DRAWING FOR CONCRETE GRATED DROP INLET TYPE 'B' 12" THRU 36" PIPE

SHEET 1 OF 1
840.18

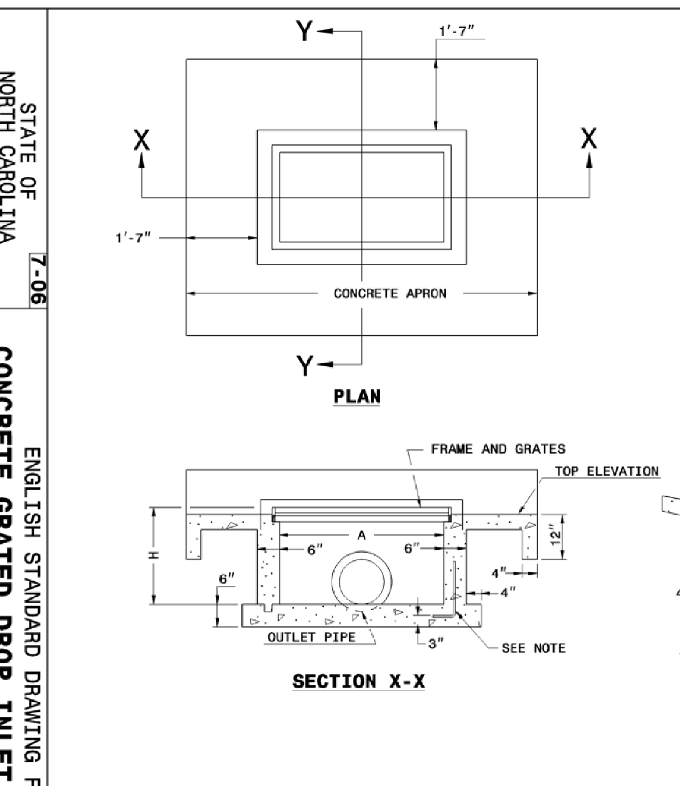

GENERAL NOTES:

USE CLASS "B" CONCRETE THROUGHOUT.

PROVIDE ALL GRATED DROP INLETS OVER 3'-6" IN DEPTH WITH STEPS 12" ON CENTER. USE STEPS WHICH COMPLY WITH STD. DRAWING 840.66.

OPTIONAL CONSTRUCTION - MONOLITHIC POUR, 2" KEYWAY, OR #4 BAR DOWELS AT 12" CENTERS AS DIRECTED BY THE ENGINEER.

USE FORMS FOR THE CONSTRUCTION OF THE BOTTOM SLAB.

IF REINFORCED CONCRETE PIPE IS SET IN BOTTOM SLAB OF BOX, ADD TO SLAB AS SHOWN ON STD. NO. 840.00.

CONSTRUCT WITH PIPE CROWNS MATCHING.

MAX. DEPTH OF THIS STRUCTURE FROM TOP OF BOTTOM SLAB TO TOP ELEVATION IS 12 FEET.

USE STANDARD FRAMES AND GRATES 840.22 (SHOWN), 840.24(SHOWN), 840.20, 840.29, AND 840.33.

SEE STANDARD DRAWING 840.25 FOR ATTACHMENT OF FRAMES AND GRATES NOT SHOWN.

CHAMFER ALL EXPOSED CORNERS 1".

DRAWING NOT TO SCALE.

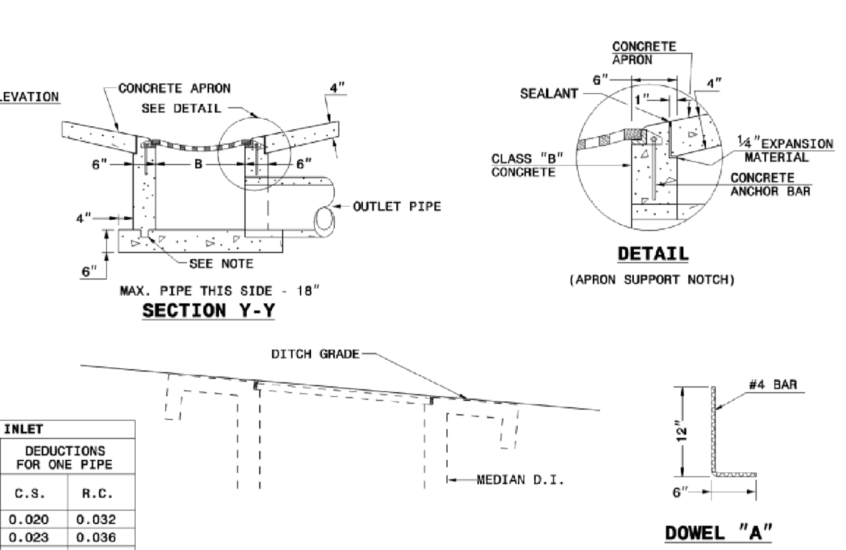

MINIMUM DIMENSIONS AND QUANTITIES FOR CONCRETE GRATED DROP INLET

PIPE	SPAN	WIDTH	HEIGHT	CUBIC YARDS OF CONCRETE IN BOX				DEDUCTIONS FOR ONE PIPE	
D	A	B	H	BOTTOM SLAB	H PER FT. HT.	H MIN. TOTAL	TOTAL	C.S.	R.C.
12"	3'-8"	2'-0"	2'-6"	0.362	0.247	0.597	0.958	0.020	0.032
15"	3'-8"	2'-0"	2'-9"	0.362	0.247	0.659	1.021	0.023	0.036
18"	3'-8"	2'-0"	3'-0"	0.362	0.247	0.720	1.082	0.033	0.049
24"	3'-8"	2'-0"	3'-6"	0.362	0.247	0.865	1.227	0.059	0.085
30"	3'-8"	2'-0"	4'-0"	0.362	0.247	0.988	1.350	0.092	0.127
36"	3'-8"	2'-0"	4'-6"	0.362	0.247	1.112	1.474	0.132	0.178

REV.NO.	DESCRIPTIONS	DATE

REVISIONS

SEAL 022574 10/03/2014

McKIM&CREED
243 North Front Street
Wilmington, North Carolina 28401
Phone: (910)343-1048, Fax: (910)251-8282
License: F-1222
www.mckimcreed.com

Newland COMMUNITIES

RIVER ROAD

ROADWAY DETAILS

DATE: SEPTEMBER 2014
MCE PROJ. # 2735-0007
DRAWN
DESIGNED
CHECKED RMC
PROJ. MGR. RMC

SCALE
HORIZONTAL: 1"=40'
VERTICAL: N/A

M&C FILE NUMBER CT-503A
DRAWING NUMBER 22A

STATUS: FINAL DESIGN PLANS
REVISION

S:\2735\0007\80-Drawings\CT503A-2735007.dwg, 10/3/2014 1:01:47 PM, rdurette,
ANSI full bleed D (34.00 x 22.00 Inches), 1:1

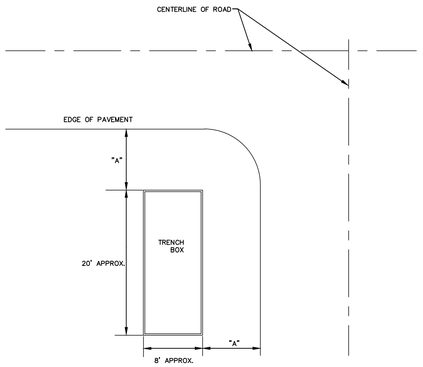

TYPICAL BORE PIT LOCATION

NOT TO SCALE

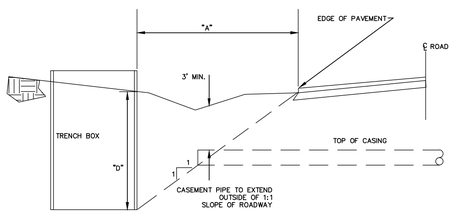

SECTION THRU BORE PIT LOCATION

NOT TO SCALE

LAYOUT SCHEDULE (FT.)								
A	5	6	7	8	9	10	11	12
D	5	6	7	8	9	10	11	12

"A" = MINIMUM DISTANCE FROM THE EDGE OF PAVEMENT (EP) IS BASED ON THE DEPTH OF PIT ("D") AND BY A RATIO OF A 1:1 SLOPE. FOLLOW SAFETY REQUIREMENTS BY FENCING OFF OPEN IT AND WORKING AREA.

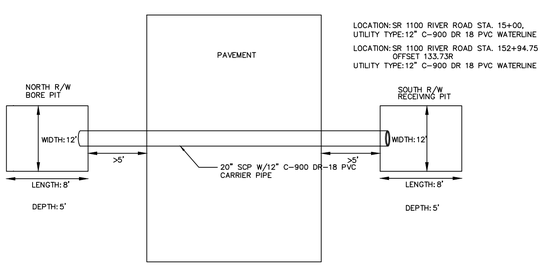

BORE PIT LOCATION STA. 15+00, 152+94.75

NOT TO SCALE

ATTACHMENT NO._____

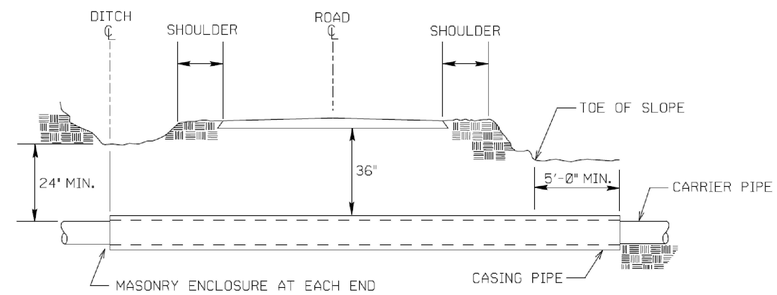

PIPE SIZE (O.D.)	WALL THICKNESS
4" - 12¾"	0.188"
16"	0.250"
18"	0.250"
20"	0.250"
24"	0.250"
30"	0.312"
36"	0.375"
48"	0.500"

ENCASEMENTS SHALL EXTEND FROM DITCH LINE TO DITCH LINE IN CUT SECTIONS,
FIVE (5) FEET BEYOND THE TOE OF SLOPES IN FILL SECTIONS, AND
TEN (10) FEET BEYOND EDGE OF PAVEMENT IN SECTIONS WITH NO DITCH OR FILL AREA.

DETAIL FOR BORE UNDER STATE ROAD

NCDOT APPROVED NOV.2000 — Not To Scale

NOTE: AS OF JULY 1, 2008, NEW HANOVER COUNTY PUBLIC UTILITIES AND CITY OF WILMINGTON UTILITIES HAVE MERGED INTO CAPE FEAR PUBLIC UTILITY AUTHORITY (CFPUA). A RESONABLE ATTEMPT HAS BEEN MADE TO CHANGE ANY REFERENCE TO THE AFORMENTIONED REGULATORY BODIES. SHOULD A REFERENCE REMAIN, PLEASE DISREGARD AND ADHERE TO CFPUA STANDARDS AND REGULATIONS

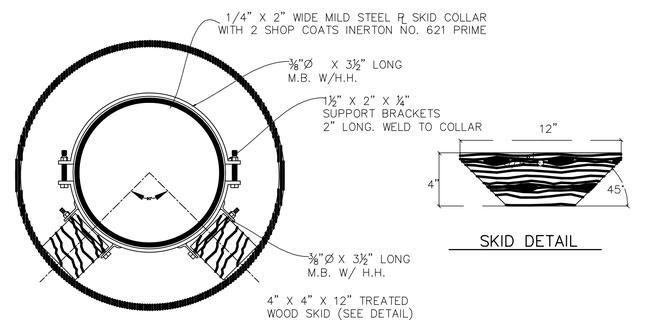

SKID COLLAR DETAIL

SKID DETAIL

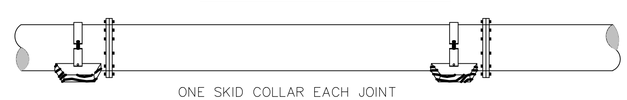

ONE SKID COLLAR EACH JOINT

SKID LOCATION

STANDARD CASING PIPE DETAIL – WATER

SD 4–05a

NTS

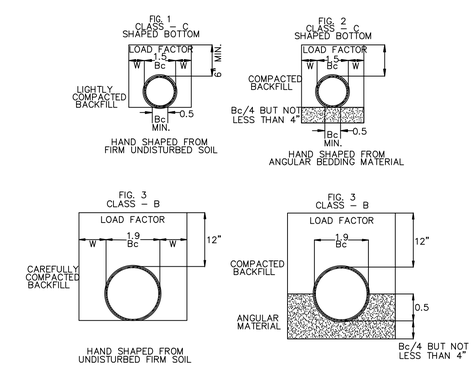

GUIDELINES FOR BEDDING DETAILS, SAN. SEWER CLASSES (B &C)

NOT TO SCALE

REV.NO.	DESCRIPTIONS	DATE

REVISIONS

SEAL

SEAL 022574 ENGINEER RICHARD MCCOLLER 10/03/2014

McKIM&CREED
243 North Front Street
Wilmington, North Carolina 28401
Phone: (910)343–1048 , Fax: (910)251–8282
License: F–1222
www.mckimcreed.com

Newland® COMMUNITIES

NORTH AMERICA SEASIDE HOUSE, LLC

RIVER ROAD

UTILITY DETAILS

DATE:	SEPTEMBER 2014
MCE PROJ. #	2735–0007
DRAWN	
DESIGNED	
CHECKED	RMC
PROJ. MGR.	RMC

SCALE — HORIZONTAL: N/A — VERTICAL: N/A

M&C FILE NUMBER CU–501

DRAWING NUMBER 23

STATUS: FINAL DESIGN PLANS

REVISION

S:\2735\0007\80-Drawings\CU501-027350007.dwg, 10/3/2014 12:17:33 PM, nilsaretta, ANSI D (22.00 x 34.00 Inches), 1:1

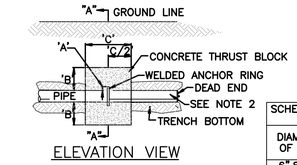

ELEVATION VIEW

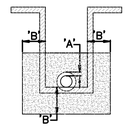

SECTION "A–A"

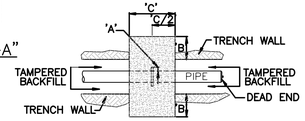

PLAN VIEW

SCHEDULE OF ANCHOR RING AND CONCRETE THRUST BLOCK DIMENSIONS AT WATER MAIN ENDS				
DIAMETER OF PIPE	ANCHOR RING	CONCRETE THRUST BLOCK		RINGS REQ'D PER PIPE JT
	A	B	C	
6",8",12"	2"	1'–0"	2'–0"	
16"	2"	1'–4"	2'–4"	
20"	3"	1'–4"	2'–4"	
24"	3"	1'–4"	2'–4"	
30"	4"	1'–4"	2'–6"	2
36"	4"	1'–4"	2'–8"	2

NOTES:

1. SIZE OF CONCRETE THRUST BLOCK AROUND ANCHOR RINGS TO BE DETERMINED BY TRENCH DIMENSION PLUS EXTENSION 'B' INTO SIDES AND BOTTOM AS SHOWN IN SCHEDULE. CONCRETE INTO SIDES OF DITCH TO BE POURED AGAINST FIRM UNDISTURBED GROUND. FILL AGAINST BLOCKING TO BE COMPACTED TO 90% PROCTOR FOR LENGTH ALONG THE PIPE OF AT LEAST 6'–0".
2. EACH SIDE FOR PIPE WITH ONE ANCHOR, LOCATE ANCHOR 4'–0" FROM DEADEND AS SHOWN FOR PIPE WITH TWO ANCHORS, LOCATE FIRST ANCHOR 3'–0" BACK FROM DEAD END AND LOCATE SECOND ANCHOR 9'–0" FROM FIRST ANCHOR.
3. WHERE THRUST BLOCK OCCURS, THE TRENCH SHOULD BE AT THE MINIMUM WIDTH.
4. CONCRETE SHALL HAVE MINIMUM 28 DAYS COMPRESSIVE STRENGTH OF 3000 PSI.

GUIDELINES FOR THRUST COLLAR INSTALLATION

NOT TO SCALE

NOTE: AS OF JULY 1, 2008, NEW HANOVER COUNTY PUBLIC UTILITIES AND CITY OF WILMINGTON UTILITIES HAVE MERGED INTO CAPE FEAR PUBLIC UTILITY AUTHORITY (CFPUA). A REASONABLE ATTEMPT HAS BEEN MADE TO CHANGE ANY REFERENCE TO THE AFOREMENTIONED REGULATORY BODIES. SHOULD A REFERENCE REMAIN, PLEASE DISREGARD AND ADHERE TO CFPUA STANDARDS AND REGULATIONS

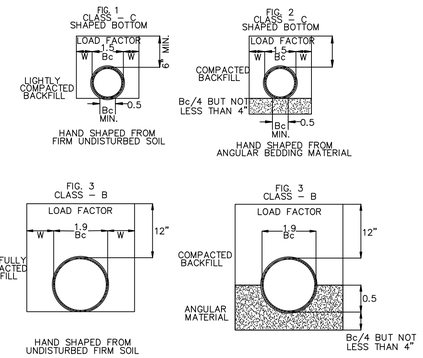

GUIDELINES FOR BEDDING DETAILS, SAN. SEWER CLASSES (B &C)

NOT TO SCALE

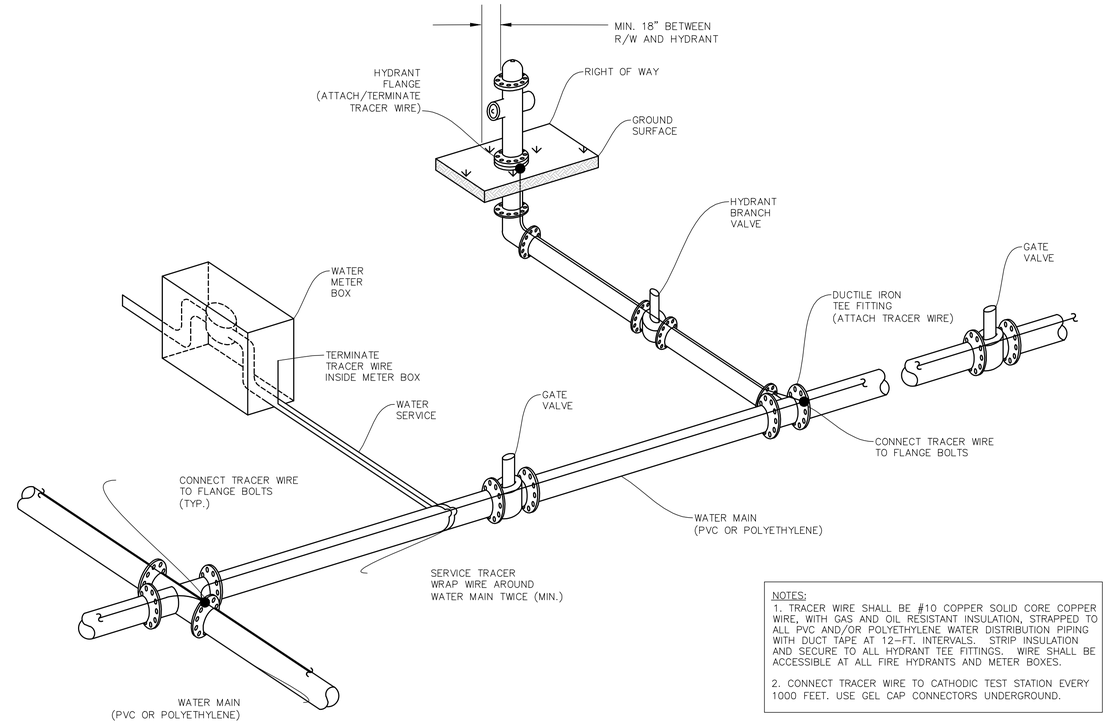

NOTES:

1. TRACER WIRE SHALL BE #10 COPPER SOLID CORE COPPER WIRE, WITH GAS AND OIL RESISTANT INSULATION, STRAPPED TO ALL PVC AND/OR POLYETHYLENE WATER DISTRIBUTION PIPING WITH DUCT TAPE AT 12–FT. INTERVALS. STRIP INSULATION AND SECURE TO ALL HYDRANT TEE FITTINGS. WIRE SHALL BE ACCESSIBLE AT ALL FIRE HYDRANTS AND METER BOXES.

2. CONNECT TRACER WIRE TO CATHODIC TEST STATION EVERY 1000 FEET. USE GEL CAP CONNECTORS UNDERGROUND.

TRACER WIRE DETAIL

NTS

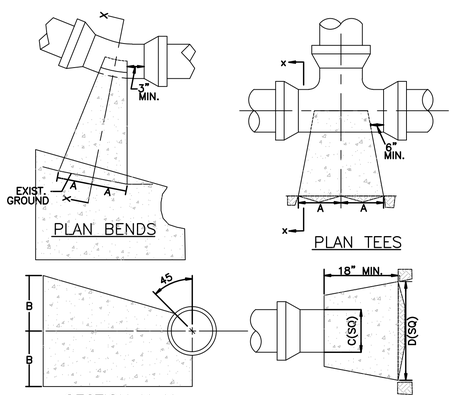

SIZE	90° BENDS		45° BENDS		22 1/2° BENDS		TEES		PLUGS	
	A	B	A	B	A	B	A	B	C	D
6"	16"	10"	9"	10"	6"	8"	10"	12"	10"	21"
8"	22"	13"	12"	13"	8"	10"	13"	16"	12"	29"
10"	26"	17"	14"	17"	10"	13"	16"	20"	14"	36"
12"	29"	21"	16"	21"	11"	16"	18"	24"	16"	41"
14"	35"	24"	19"	24"	12"	20"	22"	27"	18"	48"
16"	38"	27"	21"	27"	12"	24"	24"	30"	20"	54"

NOTE: Based on 1.5 x working pressure of 100 PSI plus AWWA Water Hammer. All bearing surfaces to be carried to undisturbed ground.

STANDARD THRUST BLOCK FOR WATER MAINS

NOT TO SCALE

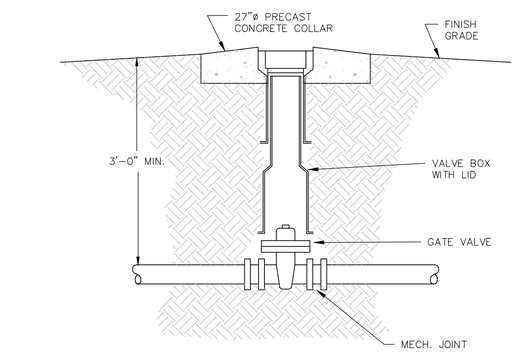

GATE VALVE DETAIL

NOT TO SCALE

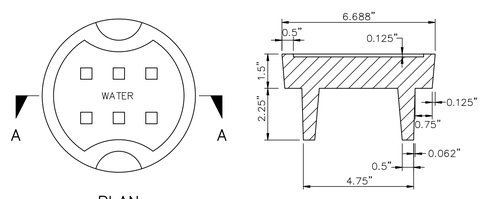

GRE–WVC–6HD, CAST IRON OR EQUAL
APPROX. WEIGHT 17lbs.

HEAVY DUTY VALVE BOX LID

NOT TO SCALE

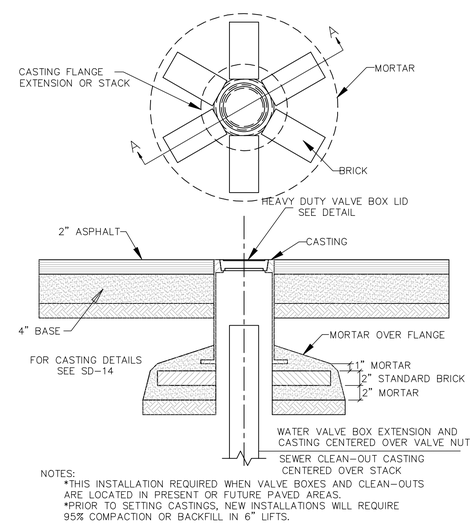

NOTES:
*THIS INSTALLATION REQUIRED WHEN VALVE BOXES AND CLEAN–OUTS ARE LOCATED IN PRESENT OR FUTURE PAVED AREAS.
*PRIOR TO SETTING CASTINGS, NEW INSTALLATIONS WILL REQUIRE 95% COMPACTION OR BACKFILL IN 6" LIFTS.

TYPICAL DETAIL VALVE BOX AND CLEAN–OUT CASTING BASES

NOT TO SCALE

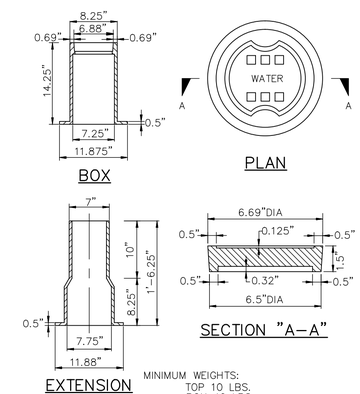

MINIMUM WEIGHTS:
TOP 10 LBS.
BOX 40 LBS.
EXTENSION 40 LBS.

NOTE:
VALVE BOX LID NOT FOR USE IN ROADWAY LOCATIONS. HEAVY DUTY LID REQUIRED. SEE SD 14–08.

WATER VALVE CASTING

NOT TO SCALE

REV.NO.	DESCRIPTIONS	DATE

REVISIONS

SEAL

SEAL 022574 ENGINEER NORTH CAROLINA PROFESSIONAL 10/03/2014

McKIM&CREED
243 North Front Street
Wilmington, North Carolina 28401
Phone: (910)343–1048 , Fax: (910)251–8282
License: F–1222
www.mckimcreed.com

Newland COMMUNITIES

NORTH AMERICA SCOTSH HOUSE, LLC

RIVER ROAD

UTILITY DETAILS

DATE:	SEPTEMBER 2014
MCE PROJ. #	2735–0007
DRAWN	
DESIGNED	
CHECKED	RMC
PROJ. MGR.	RMC

SCALE
HORIZONTAL: N/A
VERTICAL: N/A

M&C FILE NUMBER CU–502
DRAWING NUMBER 24

STATUS: FINAL DESIGN PLANS
REVISION

S:\2735\0007\90-Drawings\CU501-027350007.dwg, 10/3/2014 12:17:35 PM, nilaretta,
ANSI D (22.00 x 34.00 Inches), 1:1

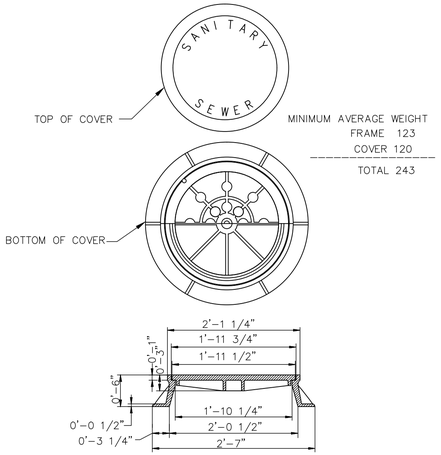

NOTES:
1. SOLID COVER SHOWN, PERFORATED AVAILABLE IF SPECIFIED
2. STANDARD LETTERS UNLESS OTHERWISE SPECIFIED

SANITARY SEWER MANHOLE RING & COVER
NOT TO SCALE

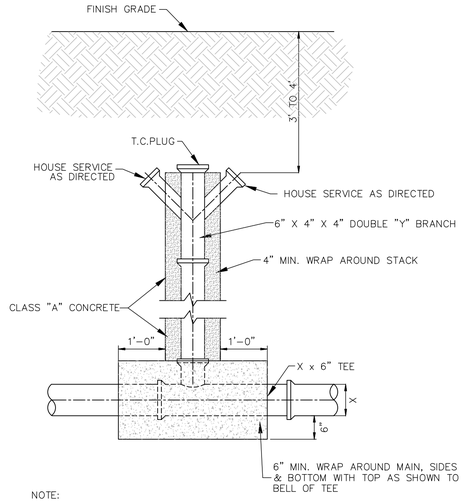

NOTE:
ALL FITTINGS & CONCRETE WRAP SHALL BE INCLUDED IN BID PRICE FOR STACK.

STANDARD STACK DETAIL
NOT TO SCALE

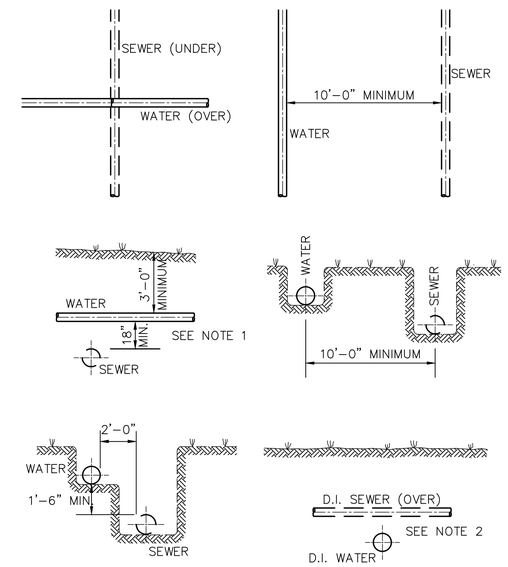

NOTES:
1. WHEN WATER MAIN IS ABOVE SEWER , BUT LESS THAN 18" CLEAR , WATER & SEWER MAINS SHALL BE CONSTRUCTED OF DUCTILE IRON PIPE WITH MECHANICAL JOINT FOR A LATERAL DISTANCE MEASURED AT RIGHT ANGLES TO THE SEWER OF AT LEAST 10 FEET ON EACH SIDE OF SEWER.
2. WHERE WATER IS LAID UNDER SEWER , BOTH WATER AND SEWER PIPE SHALL BE CONSTRUCTED OF DUCTILE IRON PIPE WITH MECHANICAL JOINT.

TYPICAL PIPE CROSSINGS AND PARALLELS
NOT TO SCALE

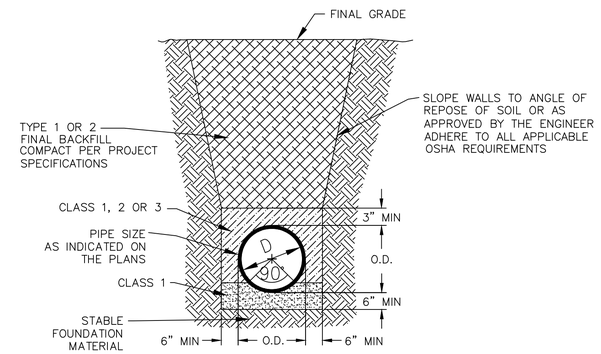

CL 50 DUCTILE IRON C900/C905 PVC PIPE TRENCH DETAIL
NOT TO SCALE

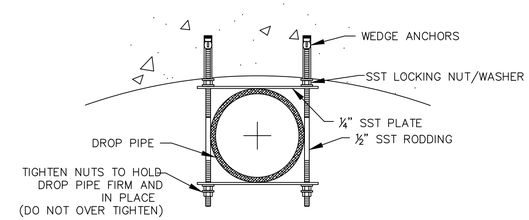

NOTE: ALL PARTS TO BE SST.

STRAP DETAIL
NOT TO SCALE

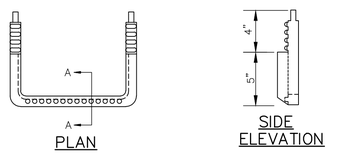

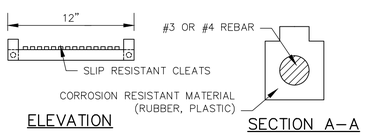

STANDARD SLIP RESISTANT MANHOLE STEP
NOT TO SCALE

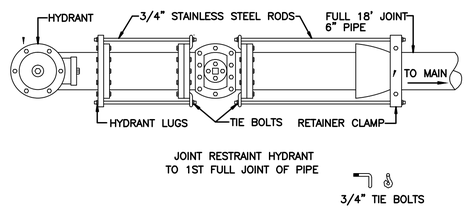

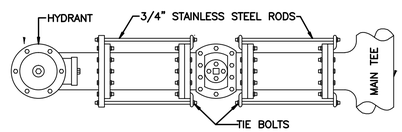

GUIDELINES FOR HYDRANT JOINT RESTRAINT
NOT TO SCALE

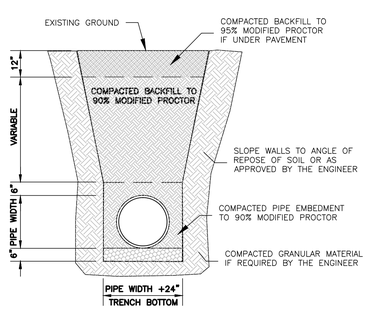

STANDARD PIPE TRENCH DETAIL
NOT TO SCALE

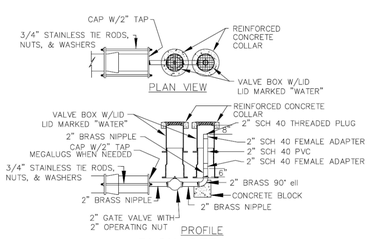

2" BLOW-OFF
NOT TO SCALE

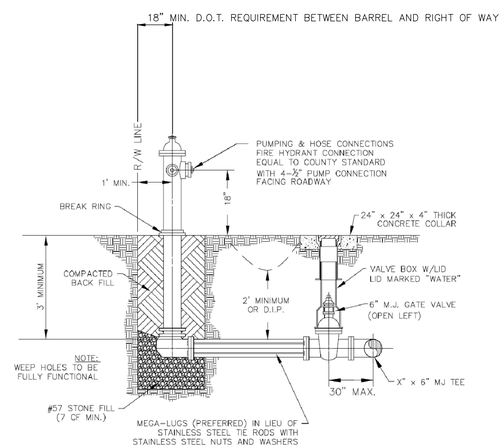

FIRE HYDRANT ASSEMBLY
NOT TO SCALE

NOTE: AS OF JULY 1, 2008, NEW HANOVER COUNTY PUBLIC UTILITIES AND CITY OF WILMINGTON UTILITIES HAVE MERGED INTO CAPE FEAR PUBLIC UTILITY AUTHORITY (CFPUA). A REASONABLE ATTEMPT HAS BEEN MADE TO CHANGE ANY REFERENCE TO THE AFOREMENTIONED REGULATORY BODIES. SHOULD A REFERENCE REMAIN, PLEASE DISREGARD AND ADHERE TO CFPUA STANDARDS AND REGULATIONS

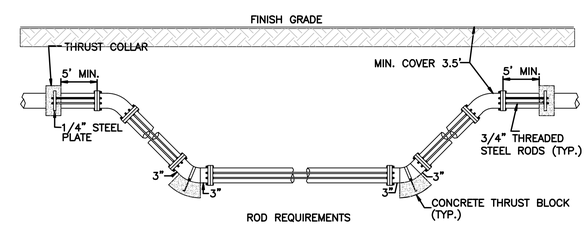

ROD REQUIREMENTS

SIZE OF 45 DEGREE BEND	STATIC THRUST IN POUNDS	NUMBER OF RODS REQUIRED
6"	4,328	2
8"	7,694	2
12"	17,312	2
16"	30,779	4
20"	48,091	6
24"	69,252	8

NOTES:
1. ONCE INSTALLED AND TIGHT, THE STEEL RODS AND BOLTS SHALL BE COATED WITH 2 COATS OF BITUMINOUS BASE PAINT.
2. CONCRETE SHALL NOT CONTACT BOLTS OR ENDS OF MECHANICAL JOINT BENDS.
3. TYPICAL MIN. CLEARANCE BETWEEN CONCRETE AND END OF BOLT MUST BE 3".
4. APPROVED OFFSETS CAN BE USED IN THIS APPLICATION.

STANDARD VERTICAL BEND
NOT TO SCALE

REV.NO.	DESCRIPTIONS	DATE

REVISIONS

SEAL

SEAL 022674 ENGINEER RICHARD MICHAEL CLIFTON NORTH CAROLINA
10/03/2014

McKIM&CREED
243 North Front Street
Wilmington, North Carolina 28401
Phone: (910)343-1048 , Fax: (910)251-8282
License: F-1222
www.mckimcreed.com

Newland COMMUNITIES

NASH North America Scenic House, LLC

RIVER ROAD

UTILITY DETAILS

DATE:	SEPTEMBER 2014
MCE PROJ. #	2735-0007
DRAWN	
DESIGNED	
CHECKED	RMC
PROJ. MGR.	RMC

SCALE
HORIZONTAL: N/A
VERTICAL: N/A

M&C FILE NUMBER CU-503
DRAWING NUMBER 25

STATUS: FINAL DESIGN PLANS
REVISION

S:\2735\0007\80-Drawings\CU501-0273500007.dwg, 10/3/2014 12:17:36 PM, nlaureta,
ANSI D (22.00 x 34.00 Inches), 1:1

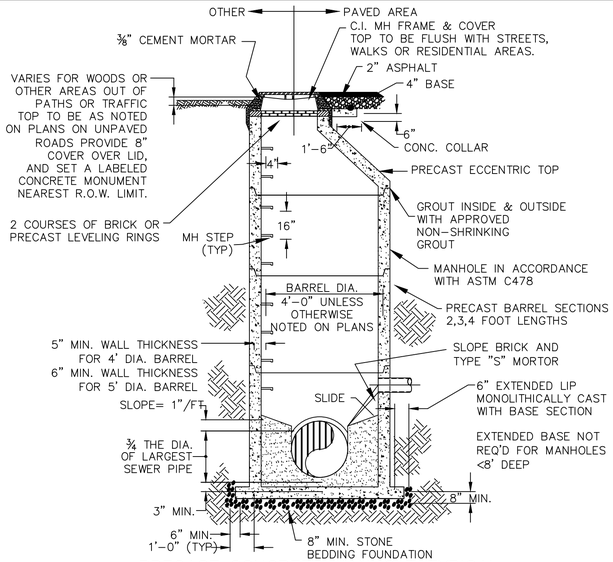

PRECAST CONCRETE MANHOLE TYPICAL
(LESS THAN 30" DROP)
NOT TO SCALE

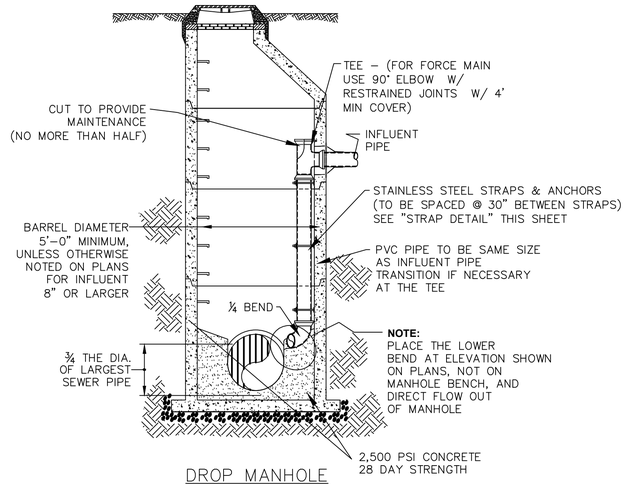

DROP MANHOLE
(MORE THAN 30" DROP)
NOT TO SCALE

STATE OF NORTH CAROLINA
DEPT. OF TRANSPORTATION
DIVISION OF HIGHWAYS
RALEIGH, N.C.

7-06

ENGLISH STANDARD DRAWING FOR
PRECAST SANITARY SEWER MANHOLE
4' AND 5' DIAMETER

SHEET 1 OF 2
1525.01

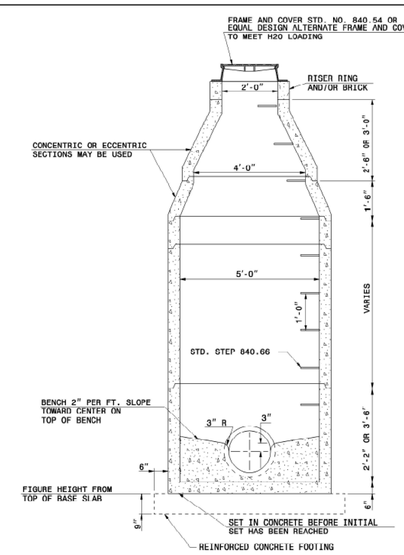

5' PRECAST MANHOLE

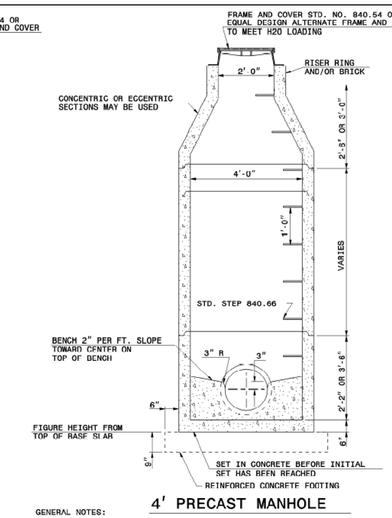

4' PRECAST MANHOLE

GENERAL NOTES:

PROVIDE PRECAST MANHOLE COMPONENTS WHICH COMPLY WITH AASHTO M199.

ASSEMBLE RISERS AND GRADE RINGS SO STEPS HAVE A SPACING OF 12" FROM THE TOP TO THE BOTTOM OF THE MANHOLE.

WHERE THE MANHOLE IS EXPOSED TO ROADWAY TRAFFIC, PLACE THE TOP OF THE MANHOLE FLUSH WITH THE GROUND; AND AT OTHER LOCATIONS PLACE THE TOP A MINIMUM OF 9" ABOVE THE GROUND.

REINFORCED CONCRETE FOOTING IS REQUIRED WHEN THE MANHOLE IS OVER 12' OR ON A POOR SOIL BASE. THE FOOTING AND BASE SECTION MAY BE PRECAST.

STATE OF NORTH CAROLINA
DEPT. OF TRANSPORTATION
DIVISION OF HIGHWAYS
RALEIGH, N.C.

7-06

ENGLISH STANDARD DRAWING FOR
PRECAST SANITARY SEWER MANHOLE
4' AND 5' DIAMETER

SHEET 1 OF 2
1525.01

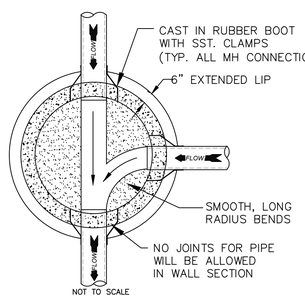

NOT TO SCALE

MANHOLE FLOOR PLAN

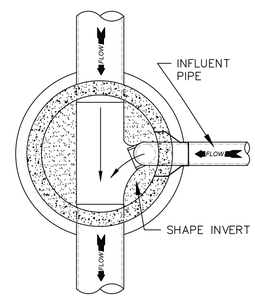

DROP MANHOLE FLOOR PLAN
NOT TO SCALE

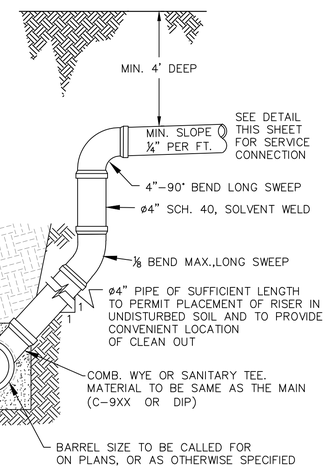

NOTE:
SPECIAL CARE SHALL BE TAKEN DURING BACKFILL OPERATIONS. THE RISER SHALL BE PLUMB AND TRUE AT ALL TIMES, AND REST ON FIRM, STABLE FOUNDATION.

DEEP SERVICE LATERAL
NOT TO SCALE

NOTE: AS OF JULY 1, 2008, NEW HANOVER COUNTY PUBLIC UTILITIES AND CITY OF WILMINGTON UTILITIES HAVE MERGED INTO CAPE FEAR PUBLIC UTILITY AUTHORITY (CFPUA). A RESONABLE ATTEMPT HAS BEEN MADE TO CHANGE ANY REFERENCE TO THE AFOREMENTIONED REGULATORY BODIES. SHOULD A REFERENCE REMAIN, PLEASE DISREGARD AND ADHERE TO CFPUA STANDARDS AND REGULATIONS

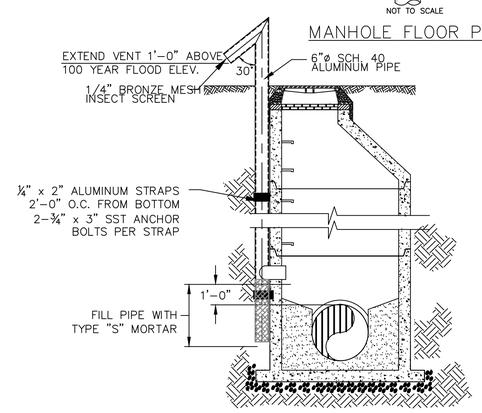

STANDARD VENT MANHOLE
NOT TO SCALE

NOTES:
THE LOCATION OF THE STANDARD VENTED MANHOLE SHALL NOT BE WITHIN THE CLEAR RECOVERY ZONE.

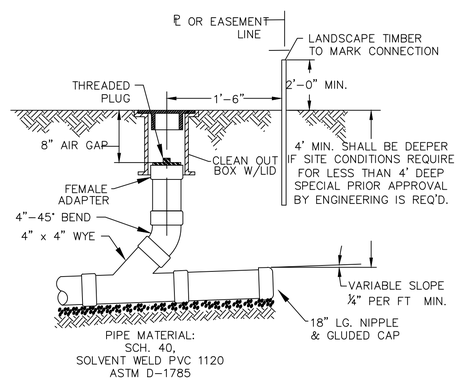

SERVICE CONNECTION & CLEAN-OUT
NOT TO SCALE

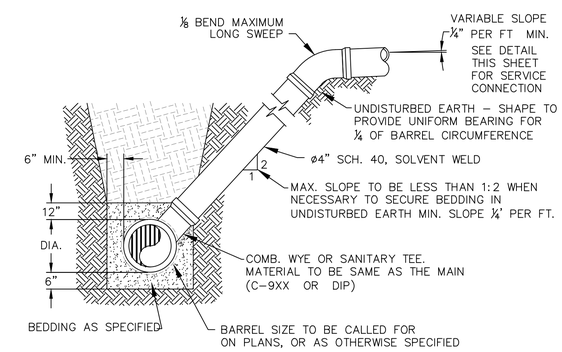

STANDARD SERVICE LATERAL
NOT TO SCALE

GENERAL NOTES:

1. NO EXCAVATED MATERIAL SHALL BE PLACED IN ANY STREAM, DITCH OR DRAINAGE-WAY.
2. THE CONTRACTOR IS RESPONSIBLE FOR LOCATING ALL UNDERGROUND UTILITIES BEFORE ANY CONSTRUCTION BEGINS.
3. THE CONTRACTOR IS RESPONSIBLE FOR TEMPORARY SEDIMENT AND EROSION CONTROL MEASURES WHILE CONSTRUCTION IS IN PROGRESS.
4. THE CONTRACTOR IS RESPONSIBLE FOR STABILIZATION OF ALL DISTURBED AREAS.
5. THE CONTRACTOR IS RESPONSIBLE FOR LAYDOWN & STOCKPILE AREAS (TO ARRANGE AND INSURE COMPLIANCE WITH ALL LOCAL AND STATE REGULATIONS).

REV.NO.	DESCRIPTIONS	DATE

REVISIONS

SEAL

SEAL 022574 ENGINEER RICHARD MILLER
10/03/2014

McKIM&CREED
243 North Front Street
Wilmington, North Carolina 28401
Phone: (910)343-1048 , Fax: (910)251-8282
License: F-1222
www.mckimcreed.com

Newland® COMMUNITIES

NORTH AMERICA SCHOOL HOUSE, LLC

RIVER ROAD

UTILITY DETAILS

DATE:	SEPTEMBER 2014
MCE PROJ. #	2735-0007
DRAWN	
DESIGNED	
CHECKED	RMC
PROJ. MGR.	RMC

SCALE
HORIZONTAL: N/A
VERTICAL: N/A

M&C FILE NUMBER CU-504
DRAWING NUMBER 26

STATUS: FINAL DESIGN PLANS
REVISION

S:\2735\0007\80-Drawings\CU501-027350007.dwg, 10/3/2014 12:17:38 PM, nilaretta,
ANSI D (22.00 x 34.00 inches), 1:1

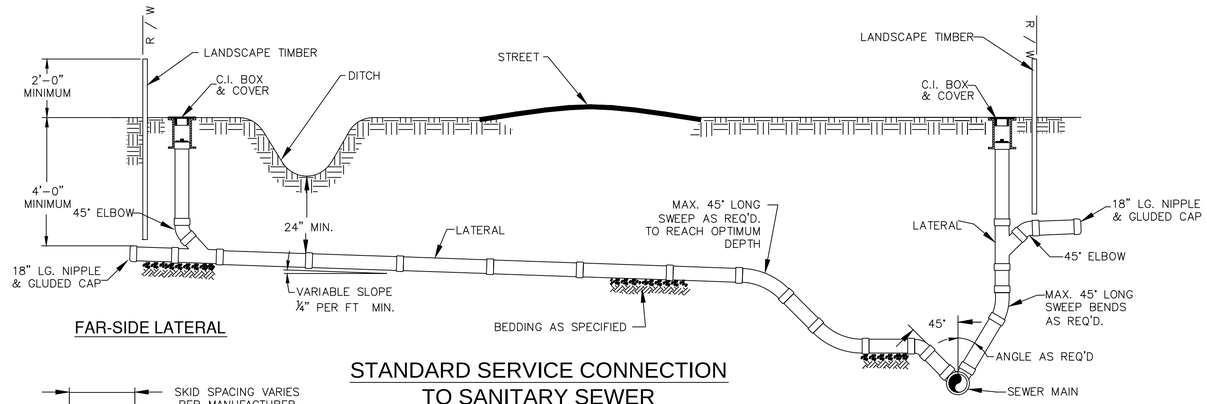

STANDARD SERVICE CONNECTION TO SANITARY SEWER

NOT TO SCALE

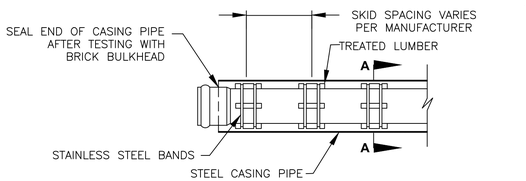

NOTE: SKID TO BE PLACED TO PROVIDE PROPER SUPPORT, ALIGNMENT, AND GRADE AS SPECIFIED. CONTINUOUS SKIDS MAY BE USED AS ALTERNATIVE. OIL, GREASE, OR PETROLEUM PRODUCT MAY NOT BE USED AS LUBRICANT.

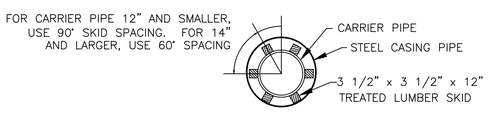

SECTION A-A

NOT TO SCALE

SEWER PIPE CASING SKID DETAIL

NOT TO SCALE

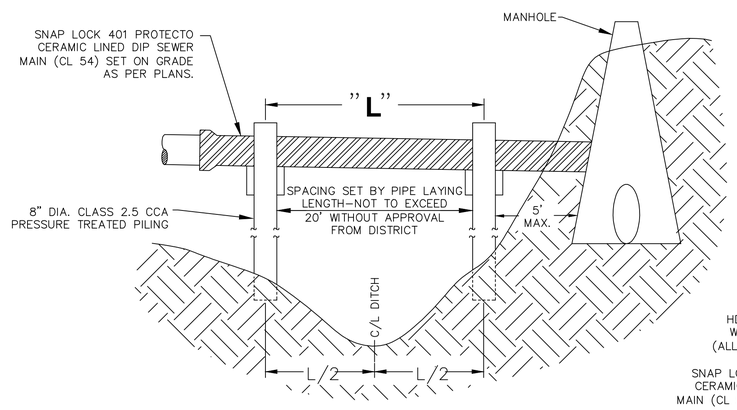

PILE AND BENT DETAIL

NOT TO SCALE

NOTE:
PAVEMENT WIDTH AND LOCATION IN R/W VARIES. SEE PLAN FOR INDIVIDUAL LOCATION.

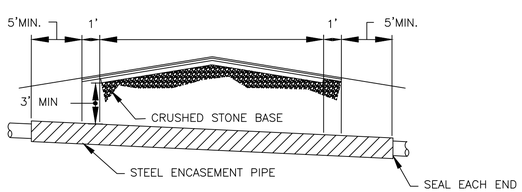

CASING WILL BE INSTALLED AT LINE AND GRADE SHOWN ON INDIVIDUAL PROFILE FOR EACH CROSSING. BORING/JACKING TO LINE AND GRADE IS REQUIRED.

TYPICAL BORING/JACKING DETAIL

NOT TO SCALE

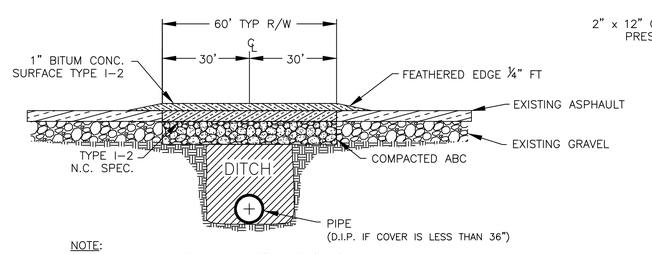

NOTE:
BACKFILL TO BE INSTALLED IN 6" LIFTS (MAX) AND COMPACTED TO A MINIMUM DENSITY OF 95% AS DETERMINED BY THE MODIFIED PROCTOR METHOD.

CUT–BACK TO BE PREFORMED AFTER TRENCH BACKFILLING AND COMPACTION.

PAVEMENT REPAIR WHERE PIPE INSTALLED

NOT TO SCALE

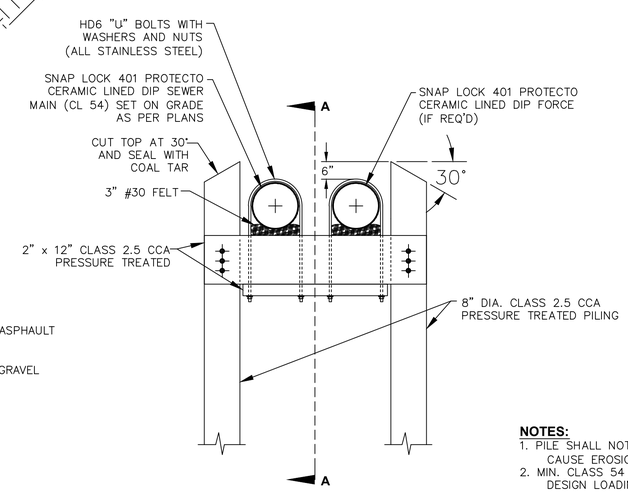

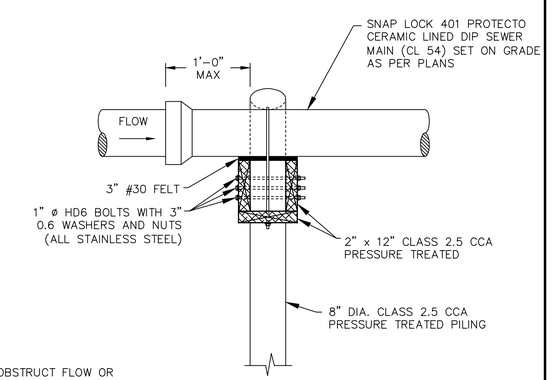

NOTES:
1. PILE SHALL NOT OBSTRUCT FLOW OR CAUSE EROSION OF DITCH/STREAM BANK.
2. MIN. CLASS 54 DIP–ENGINEER MUST DESIGN LOADING.

SECTION A–A

NOT TO SCALE

PILE AND BENT SECTION / DETAIL

NOT TO SCALE

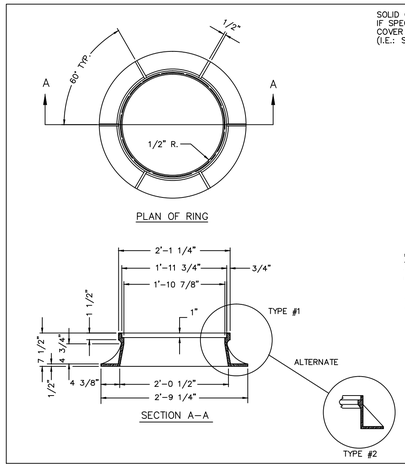

MINIMUM WEIGHTS – LBS.
FRAME – 180
COVER – 120
TOTAL – 300

SPECIFICATION
CLASS 30 IRON MEETING ASTM A–48

STATE OF NORTH CAROLINA
DEPT. OF TRANSPORTATION
DIVISION OF HIGHWAYS
RALEIGH, N.C.

ENGLISH STANDARD DRAWING FOR MANHOLE FRAME AND COVER

SHEET 1 OF 1
840.54

GENERAL NOTES:

1. NO EXCAVATED MATERIAL SHALL BE PLACED IN ANY STREAM, DITCH OR DRAINAGE-WAY.
2. THE CONTRACTOR IS RESPONSIBLE FOR LOCATING ALL UNDERGROUND UTILITIES BEFORE ANY CONSTRUCTION BEGINS.
3. THE CONTRACTOR IS RESPONSIBLE FOR TEMPORARY SEDIMENT AND EROSION CONTROL MEASURES WHILE CONSTRUCTION IS IN PROGRESS.
4. THE CONTRACTOR IS RESPONSIBLE FOR STABILIZATION OF ALL DISTURBED AREAS.
5. THE CONTRACTOR IS RESPONSIBLE FOR LAYDOWN & STOCKPILE AREAS (TO ARRANGE AND INSURE COMPLIANCE WITH ALL LOCAL AND STATE REGULATIONS).

NOTE: AS OF JULY 1, 2008, NEW HANOVER COUNTY PUBLIC UTILITIES AND CITY OF WILMINGTON UTILITIES HAVE MERGED INTO CAPE FEAR PUBLIC UTILITY AUTHORITY (CFPUA). A REASONABLE ATTEMPT HAS BEEN MADE TO CHANGE ANY REFERENCE TO THE AFOREMENTIONED REGULATORY BODIES. SHOULD A REFERENCE REMAIN, PLEASE DISREGARD AND ADHERE TO CFPUA STANDARDS AND REGULATIONS

REV.NO.	DESCRIPTIONS	DATE

REVISIONS

SEAL

SEAL 022574 ENGINEER ROCKY MOUNT, NORTH CAROLINA
10/03/2014

McKIM&CREED
243 North Front Street
Wilmington, North Carolina 28401
Phone: (910)343–1048 , Fax: (910)251–8282
License: F–1222
www.mckimcreed.com

Newland® COMMUNITIES

NAH North America Seersia House, LLC

RIVER ROAD

UTILITY DETAILS

DATE:	SEPTEMBER 2014
MCE PROJ. #	2735–0007
DRAWN	
DESIGNED	
CHECKED	RMC
PROJ. MGR.	RMC

SCALE
HORIZONTAL: N/A
VERTICAL: N/A

M&C FILE NUMBER CU–505
DRAWING NUMBER 27

STATUS: FINAL DESIGN PLANS
REVISION

S:\2735\0007\90-Drawings\CU501-0273500007.dwg, 10/3/2014 12:17:42 PM, mlaretta, ANSI D (22.00 x 34.00 Inches), 1:1

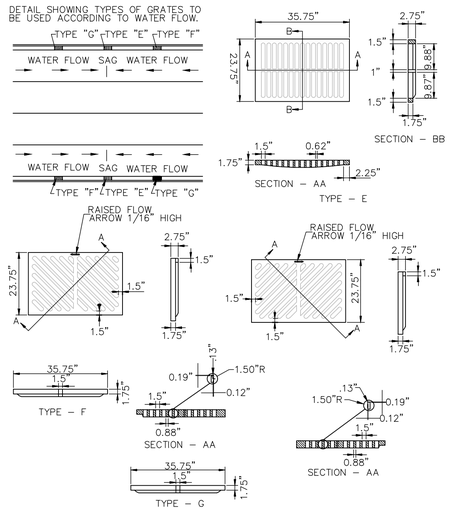

CATCH BASIN GRATE FOR PRE-CAST

NOT TO SCALE

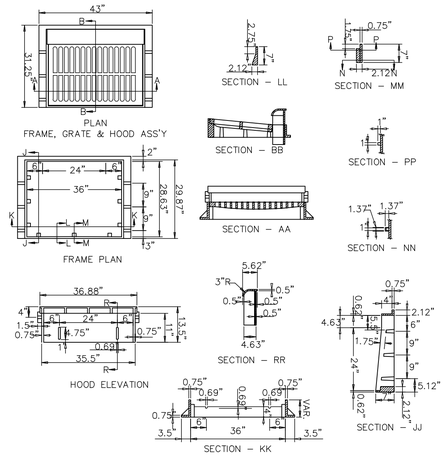

REFERENCE TO NCDOT DETAIL NO. 840.03.

NOTE: USE TYPE "E","F",& "G" GRATE UNLESS OTHERWISE INDICATED

CATCH BASIN CASTING FOR PRE-CAST

NOT TO SCALE

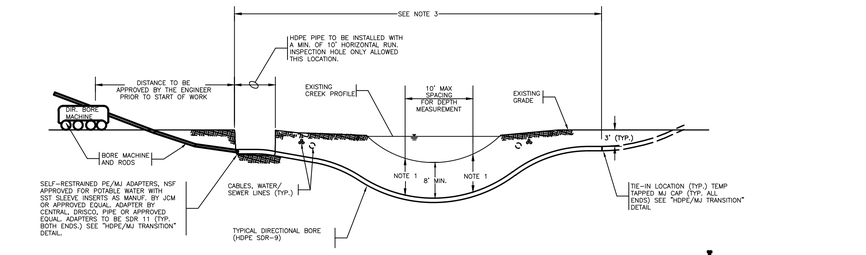

NOTES:

1. A PROFILE AND PLAN SHALL BE PROVIDED FROM ENTRY TO EXIT FOR EACH DIRECTIONAL BORE SECTION BY THE DIRECTIONAL BORE CONTRACTOR.
2. ALL BORE SECTIONS SHALL BE HYDROSTATICALLY TESTED PER SPECIFICATION STANDARDS UPON COMPLETION OF INSTALLATION AND PRIOR TO PLACING THE WATER MAIN ON-LINE.
3. LENGTH OF CROSSING, LOCATION OF INSPECTION/OBSERVATION EXCAVATION, NUMBER OF P.E. PIPE JOINTS, LOCATION OF BORE MACHINE, AUGER ENTRANCE LOCATION, AND TIE-IN POINTS ARE TO BE APPROVED BY THE ENGINEER PRIOR TO ANY START OF WORK.
4. THIS DETAIL IS ALSO APPLICABLE TO STREAMS, WETLANDS, LARGE STORM DRAINS, AND SIMILAR APPLICATIONS FOR DIRECTIONAL BORE WITH POLY-ETHYLENE PIPE.
5. THE BORE DEVELOPED FOR THE LEAD IN END OF THE PIPE SHALL BE KEPT AT A MINIMUM DIAMETER FOR THE PIPE INSTALLATION. THE LEAD IN END SHALL BE PULLED THROUGH WITHOUT THE M.J. FLANGE ATTACHED FOR LARGER THAN 6" PIPE INSTALLATIONS. THE M.J. FLANGE FOR SAID LEAD IN END SHALL BE INSTALLED AFTER THE PIPE INSTALLATION WITH THE USE OF A SPLIT M.J. FLANGE PER THE DETAIL ON THIS DRAWING.

TYPICAL DIRECTIONAL BORE FOR POLYETHYLENE (PE) PIPE

N.T.S.

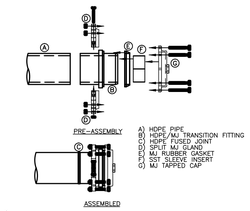

HDPE/MJ TRANSITION ASSEMBLY

N.T.S.

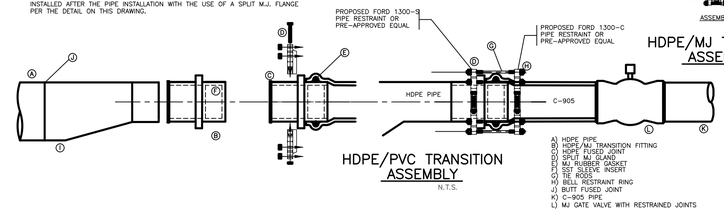

HDPE/PVC TRANSITION ASSEMBLY

N.T.S.

#9400 – WC AUTOMATIC FLUSHING DEVICE
(WARM CLIMATES ONLY)

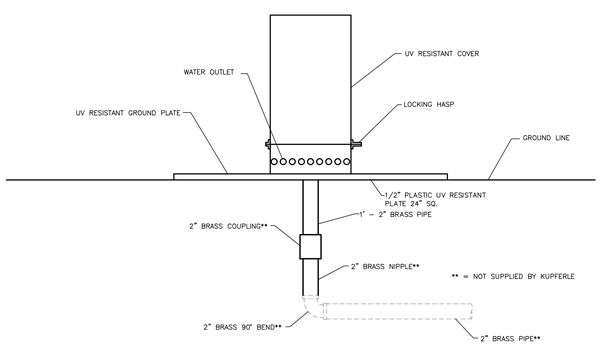

AUTOMATIC FLUSHING DEVICE SHALL HAVE A 2" BRASS MIP INLET, LEADING VERTICALLY THROUGH A UV RESISTANT GROUND PLATE, A MOUNTING FLANGE, AND ATTACHING TO A PLASTIC SCH 80 TRAFFIC BREAK-AWAY COUPLING. A 2" ALUMINUM QUICK DISCONNECT DEVICE SHALL BE LOCATED ABOVE THE TRAFFIC COUPLING, LEADING INTO THE 2" AUTOMATIC VALVE. AUTOMATIC SOLENOID VALVE SHALL BE LOCATED ABOVE GROUND FOR EASY ACCESS, HAVE INTERNAL, SELF-CLEANING DEBRIS SCREEN, AND HAVE A 220 PSI RATING. VALVE CONTROLLER WILL NOT REQUIRE A SECOND HAND-HELD DEVICE FOR PROGRAMMING, MUST HAVE A MINIMUM OF 9 POSSIBLE FLUSHING CYCLES PER DAY, SHALL BE SUBMERSIBLE TO 12 FEET, OPERATE WITH A 9 VOLT BATTERY, HAVE RESIN-SEALED ELECTRICAL COMPONENTS, AND SHALL BE LOCATED ABOVE WATER FLOW. SOLENOID SHALL HAVE NO LOOSE PARTS WHEN REMOVED FROM VALVE. VALVE, SOLENOID, AND CONTROLLER SHALL HAVE RUBBER CAPS FOR ADDED PROTECTION. EACH UNIT SHALL HAVE A DOUBLE-VALVE, ALL BRASS SAMPLING POINT. WATER SHALL EXIT UNIT HORIZONTALLY THROUGH HOLES LOCATED NEAR GROUNDLINE. ALL ABOVE-GROUND COMPONENTS SHALL BE CONTAINED WITHIN A UV-RESISTANT LOCKING DOMED COVER, AS MANUFACTURED BY KUPFERLE FOUNDRY COMPANY, ST. LOUIS, MO , 1-800-231-3990, OR APPROVED EQUAL.

AUTOMATIC FLUSHING DEVICE

NOT TO SCALE

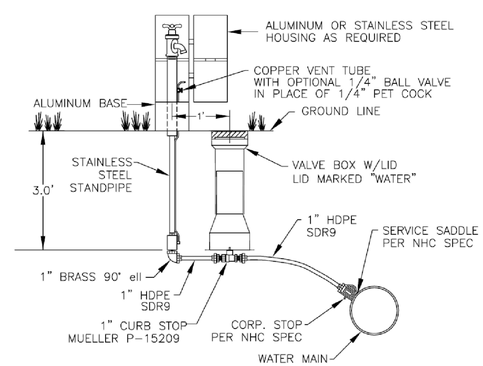

ECLIPSE NO. 88 SAMPLING STATION

NOT TO SCALE

NOTE: AS OF JULY 1, 2008, NEW HANOVER COUNTY PUBLIC UTILITIES AND CITY OF WILMINGTON UTILITIES HAVE MERGED INTO CAPE FEAR PUBLIC UTILITY AUTHORITY (CFPUA). A RESONABLE ATTEMPT HAS BEEN MADE TO CHANGE ANY REFERENCE TO THE AFOREMENTIONED REGULATORY BODIES. SHOULD A REFERENCE REMAIN, PLEASE DISREGARD AND ADHERE TO CFPUA STANDARDS AND REGULATIONS

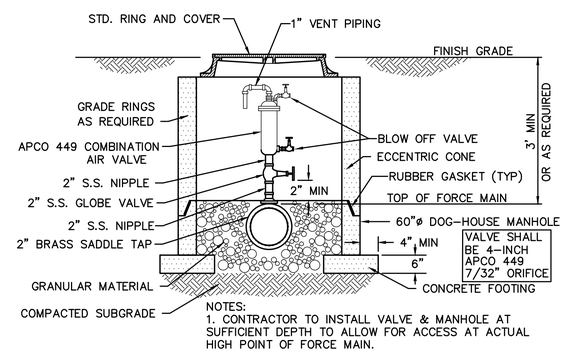

NOTES:
1. CONTRACTOR TO INSTALL VALVE & MANHOLE AT SUFFICIENT DEPTH TO ALLOW FOR ACCESS AT ACTUAL HIGH POINT OF FORCE MAIN.
2. FORCE MAIN TO BE OFFSET IN MANHOLE
3. REFER TO SPECIFICATIONS FOR ADDITIONAL DETAILS.

AIR/VACUUM AND AIR RELEASE COMBINATION DUAL BODY VALVE

NOT TO SCALE

REV.NO.	DESCRIPTIONS	DATE

REVISIONS

SEAL

SEAL 022574 ENGINEER NORTH CAROLINA 10/03/2014

McKIM&CREED
243 North Front Street
Wilmington, North Carolina 28401
Phone: (910)343-1048 , Fax: (910)251-8282
License: F-1222
www.mckimcreed.com

Newland COMMUNITIES

NORTH AMERICA SERIOUS HOUSE, LLC

RIVER ROAD

UTILITY DETAILS

DATE:	SEPTEMBER 2014
MCE PROJ. #	2735-0007
DRAWN	
DESIGNED	
CHECKED	RMC
PROJ. MGR.	RMC

SCALE
HORIZONTAL: N/A
VERTICAL: N/A

M&C FILE NUMBER CU-506
DRAWING NUMBER 28

STATUS: FINAL DESIGN PLANS
REVISION

S:\2735\0007\90-Drawings\CU501-0273500007.dwg, 10/3/2014 12:17:43 PM, mfiaretta, ANSI D (22.00 x 34.00 Inches), 1:1

INFILTRATION POND A

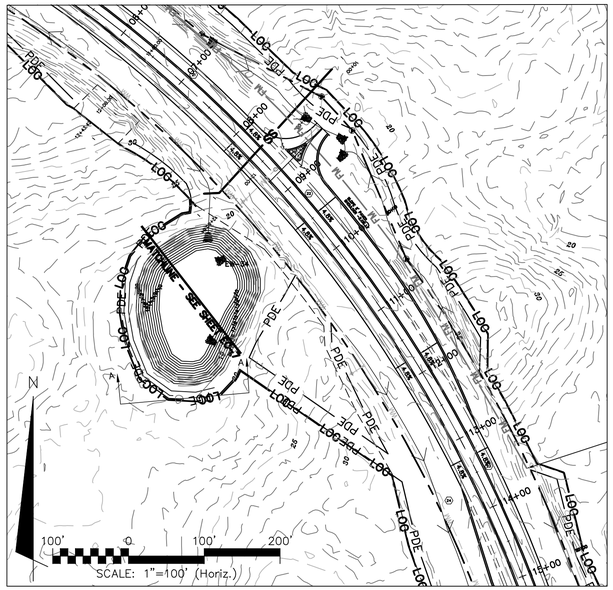

STORM ELEVATIONS
2-YEAR = 14.14'
10-YEAR = 15.41'
25-YEAR = 16.24'
100-YEAR = 17.47'

INFILTRATION BASIN ELEVATIONS		
	TOP	BOTTOM
BASIN #	ELEVATION (FT)	ELEVATION (FT)
B	20.00	11.50

NOTE: INFILTRATION POND A MUST BE BUILT AT THE TIME OF INSTALLATION FOR EW-34.

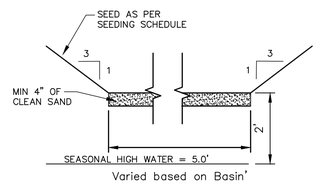

SECTION A-A (TYP.)

INFILTRATION BASIN CROSS SECTION

NOT TO SCALE

PDE=PUBLIC DRAINAGE EASEMENT

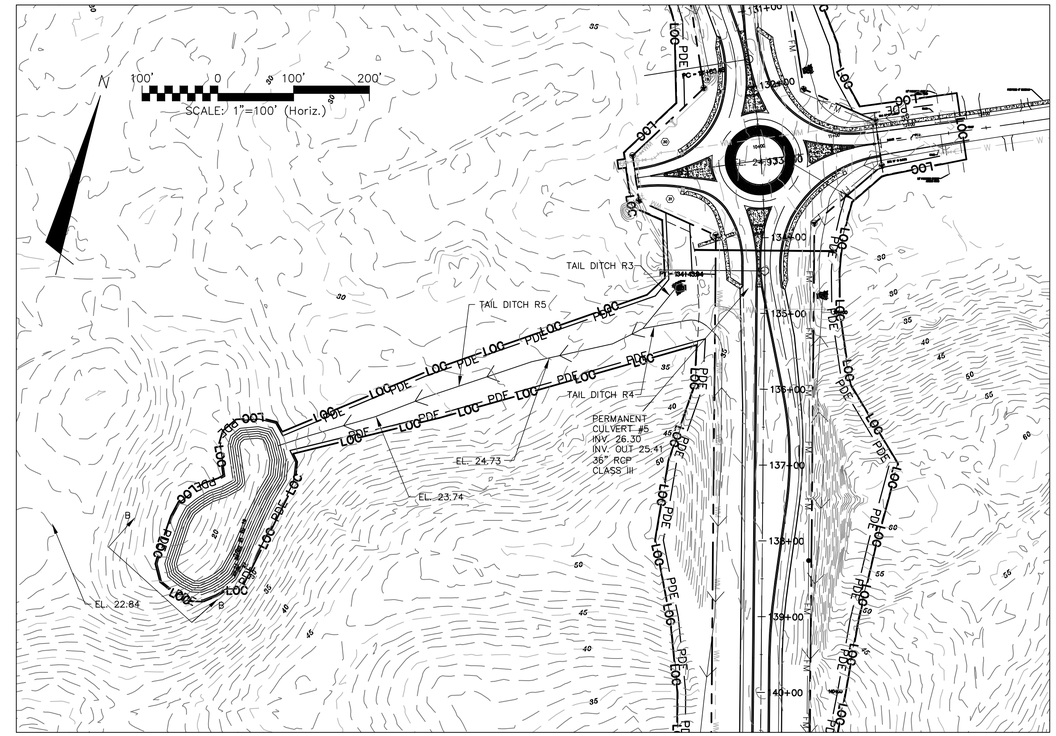

INFILTRATION POND B

INFILTRATION BASIN ELEVATIONS		
	TOP	BOTTOM
BASIN #	ELEVATION (FT)	ELEVATION (FT)
B	24.00	19.00

STORM ELEVATIONS
2-YEAR = 20.56'
10-YEAR = 21.16'
25-YEAR = 21.56'
100-YEAR = 22.17'

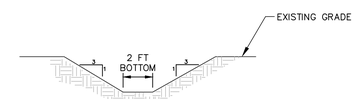

DITCH DETAIL

Not to Scale

TAIL DITCHES R1, R2, R3, R5, AND L1

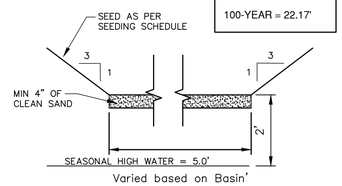

SECTION B-B (TYP.)

INFILTRATION BASIN CROSS SECTION

NOT TO SCALE

STA. 101+34 DETAIL

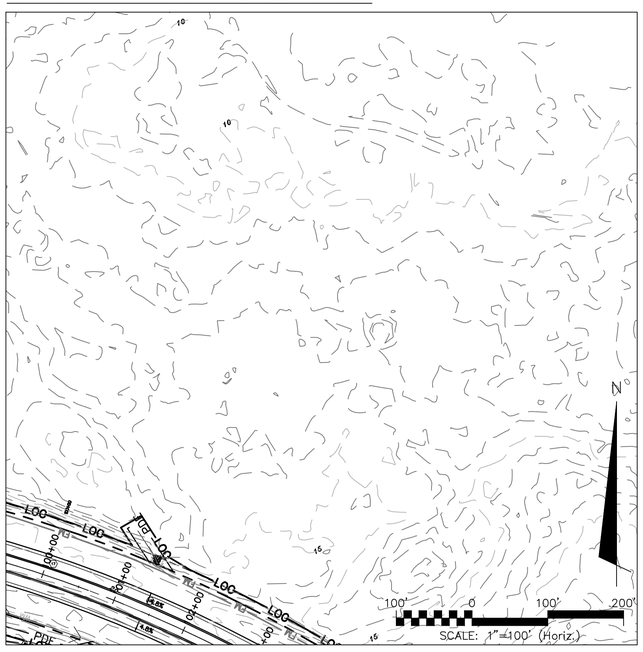

STA. 152+00 TO 158+00 DETAIL

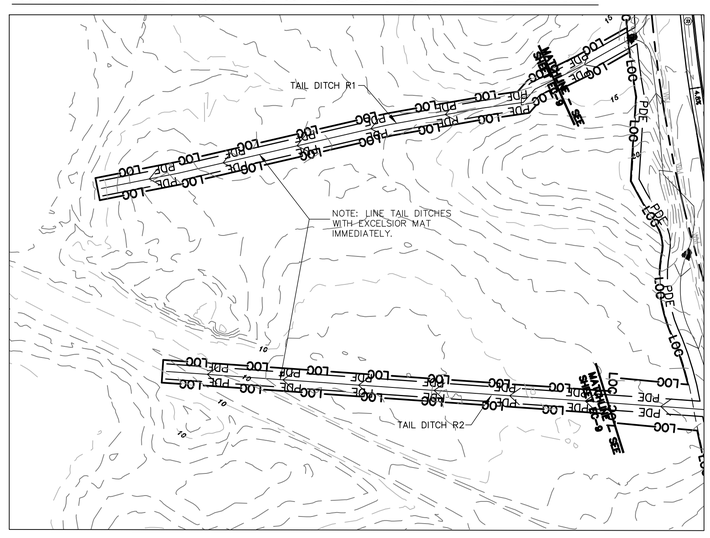

NOT FOR CONSTRUCTION

ISSUED FOR PERMITTING

REV.NO.	DESCRIPTIONS	DATE
	REVISIONS	

SEAL

SEAL

McKIM&CREED
243 North Front Street
Wilmington, North Carolina 28401
Phone: (910)343-1048 , Fax: (910)251-8282
AA0002667 EB0006691
www.mckimcreed.com

Newland COMMUNITIES

NORTH AMERICA SERVICE HOUSE, LLC

RIVER ROAD

INFILTRATION PIT DETAILS

DATE:	SEPTEMBER 2014
MCE PROJ. #	02735-0007
DRAWN	BCE
DESIGNED	BCE
CHECKED	RMC
PROJ. MGR.	RMC

SCALE
HORIZONTAL: 1" = 60'
VERTICAL:

M&C FILE NUMBER CN-501

DRAWING NUMBER 29

STATUS: FINAL DESIGN PLANS

REVISION

S:\2735\0007\90-Drawings\CN501A.027350007.dwg, 10/3/2014 12:18:51 PM, nlaureta, ANSI D (22.00 x 34.00 Inches), 1:1

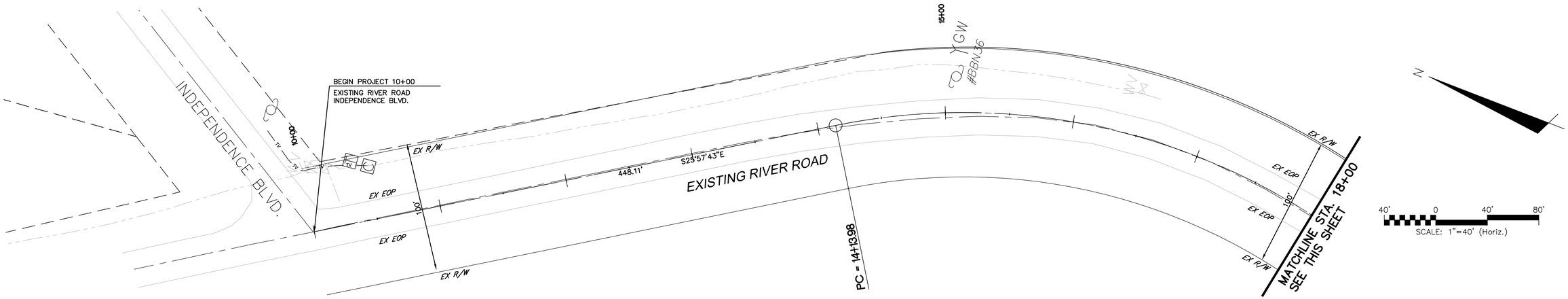

THERMOPLASTIC PAVEMENT MARKING MATERIALS

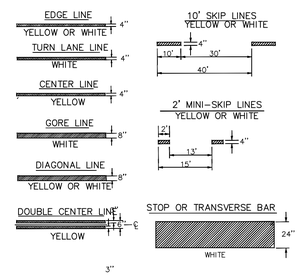

PAVEMENT MARKING DETAIL
NOT TO SCALE

PAVEMENT MARKING LINES
---------- THERMOPLASTIC (4", 90 mils)
TA - WHITE EDGE LINE
TB - YELLOW EDGE LINE
---------- THERMOPLASTIC (4", 120 mils)
TC - 10 ft. WHITE SKIP
TD - 2 ft. WHITE MINI SKIP
TE - WHITE SOLID LANE LINE
TF - 10ft. YELLOW SKIP
TG - 2 ft. YELLOW MINI SKIP
TH - YELLOW SINGLE CENTER LINE
TI - YELLOW DOUBLE CENTER LINE
---------- THERMOPLASTIC (6", 120 mils)
T6 - WHITE EDGE LINE
T7 - YELLOW EDGE LINE
TJ - 10 ft. WHITE SKIP
TK - 2 ft. WHITE MINI SKIP
TL - WHITE SOLID LANE LINE
TM - 10 ft. YELLOW SKIP
TN - 2 ft. YELLOW MINI SKIP
---------- THERMOPLASTIC (8", 90 mils)
TO - WHITE EDGE LINE
TP - WHITE GORE LINE
TQ - WHITE DIAGONAL
TR - WHITE RAMP ARROW LINE
TS - YELLOW EDGE LINE
TT - YELLOW DIAGONAL
* DENOTES RAISED PAVEMENT MARKERS, SEE DEATIL SHT XXX

---------- THERMOPLASTIC (8", 120 mils)
TU - 3 ft. WHITE MINI SKIP
TV - WHITE CROSSWALK
TW - YELLOW SINGLE CENTER LINE
TX - YELLOW DOUBLE YELLOW CENTER LINE
---------- THERMOPLASTIC (12", 90 mils)
TY - WHITE GORE LINE
---------- THERMOPLASTIC (12", 120 mils)
TZ - 3 ft. WHITE MINI SKIP
---------- THERMOPLASTIC (16", 120 mils)
T1 - WHITE LINE FOR RR CROSS BUCK
---------- THERMOPLASTIC (24", 120 mils)
T2 - WHITE STOP BAR
T3 - WHITE CROSSWALK LINE
---------- THERMOPLASTIC (4", 240 mils)
T4 - WHITE RUMBLE STRIP
T5 - YELLOW RUMBLE STRIP

PAVEMENT MARKING SYMBOLS
---------- THERMOPLASTIC (90 mils)
UA - LEFT TURN ARROW
UB - RIGHT TURN ARROW
UC - STRAIGHT ARROW
UD - COMBINATION STRAIGHT & LEFT TURN ARROW
UE - COMBINATION STRAIGHT & RIGHT TURN ARROW
UF - COMBINATION LEFT & RIGHT TURN ARROW
UG - COMBINATION LEFT, RIGHT, & STRAIGHT ARROW

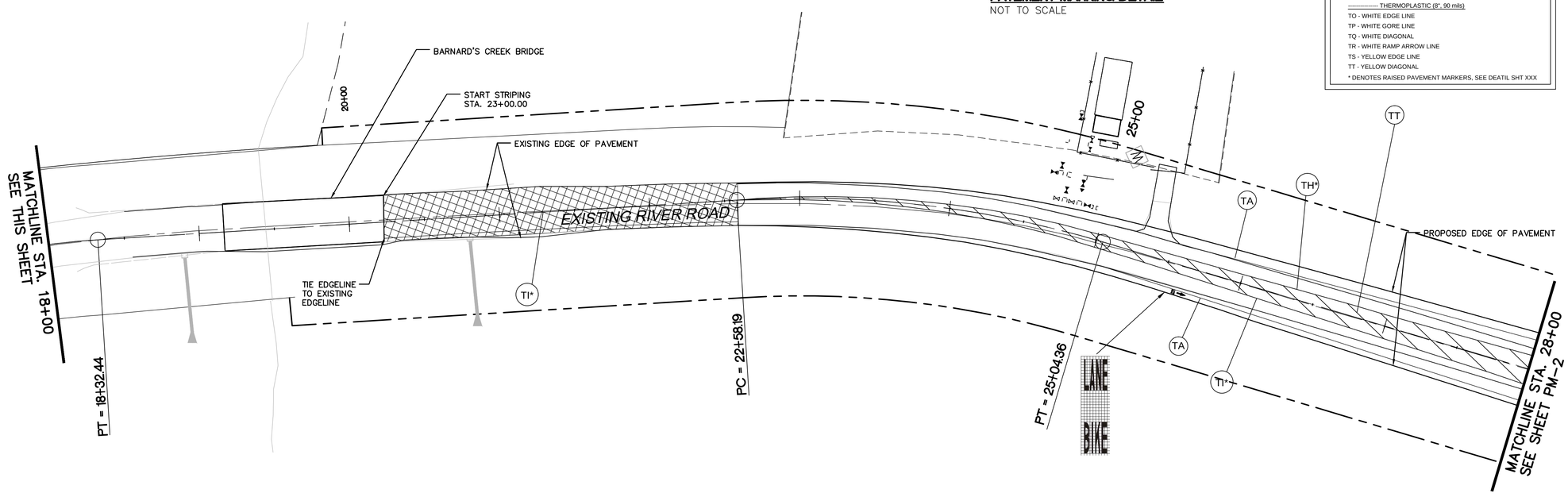

NOT FOR CONSTRUCTION

REV.NO.	DESCRIPTIONS	DATE
	REVISIONS	

SEAL

SEAL 022574 ENGINEER RICHARD MICHAEL CLOUTIER NORTH CAROLINA
10/03/2014

McKIM&CREED
243 North Front Street
Wilmington, North Carolina 28401
Phone: (910)343-1048 , Fax: (910)251-8282
License: F-1222
www.mckimcreed.com

Newland® COMMUNITIES

NASH North America Scotsh House, LLC

RIVER ROAD

PAVEMENT MARKING AND SIGN PLANS
PROPOSED RIVER ROAD
STA 10+00 – STA 28+00

DATE:	SEPTEMBER 2014
MCE PROJ. #	2735-0007
DRAWN	
DESIGNED	
CHECKED	RMC
PROJ. MGR.	RMC

SCALE
HORIZONTAL: 1"=40'
VERTICAL: N/A

M&C FILE NUMBER CP-101
DRAWING NUMBER PM-1

STATUS: FINAL DESIGN PLANS
REVISION

S:\2735\0007\80-Drawings\CP101-027350007.dwg, 10/3/2014 12:21:46 PM, nlaureta,
ANSI D (22.00 x 34.00 Inches), 1:1

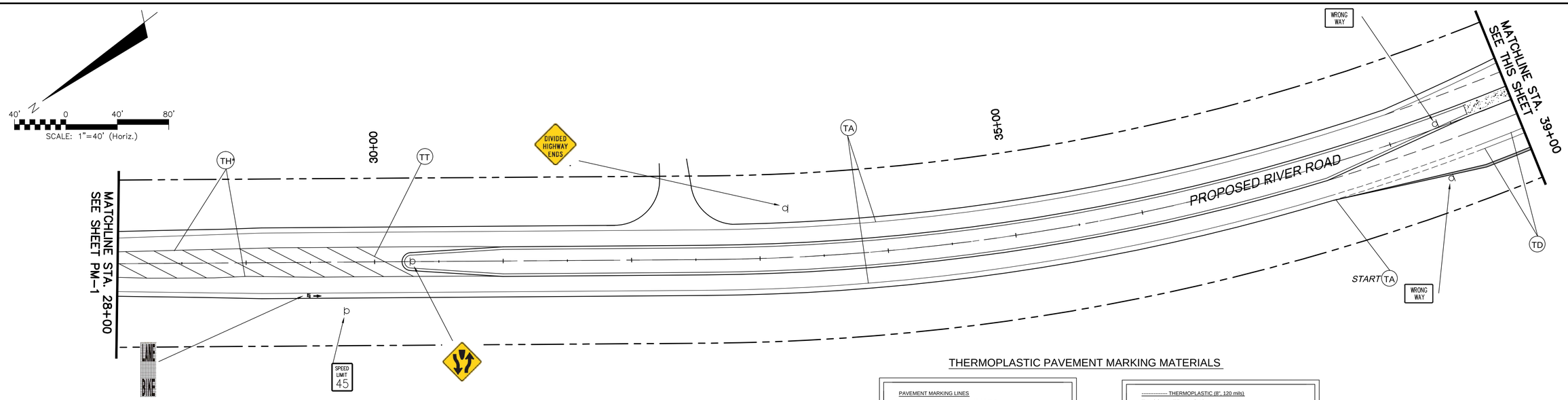

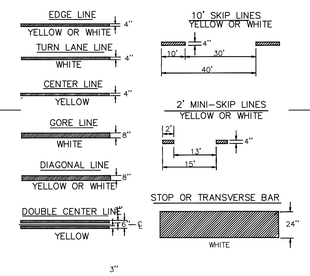

PAVEMENT MARKING DETAIL
NOT TO SCALE

STRIPING AND MARKINGS IN DRIVEWAY STUBS TO BE APPLIED WHEN DRIVEWAYS ARE COMPLETED

THERMOPLASTIC PAVEMENT MARKING MATERIALS

PAVEMENT MARKING LINES
---------- THERMOPLASTIC (4", 90 mils)

TB - YELLOW EDGE LINE
---------- THERMOPLASTIC (4", 120 mils)
TC - 10 ft. WHITE SKIP
TD - 2 ft. WHITE MINI SKIP
TE - WHITE SOLID LANE LINE
TF - 10ft. YELLOW SKIP
TG - 2 ft. YELLOW MINI SKIP
TH - YELLOW SINGLE CENTER LINE
TI - YELLOW DOUBLE CENTER LINE
---------- THERMOPLASTIC (6", 120 mils)
T6 - WHITE EDGE LINE
T7 - YELLOW EDGE LINE
TJ - 10 ft. WHITE SKIP
TK - 2 ft. WHITE MINI SKIP
TL - WHITE SOLID LANE LINE
TM - 10 ft. YELLOW SKIP
TN - 2 ft. YELLOW MINI SKIP
---------- THERMOPLASTIC (8", 90 mils)
TO - WHITE EDGE LINE
TP - WHITE GORE LINE
TQ - WHITE DIAGONAL
TR - WHITE RAMP ARROW LINE
TS - YELLOW EDGE LINE
TT - YELLOW DIAGONAL
* DENOTES RAISED PAVEMENT MARKERS, SEE DETAIL SHT

---------- THERMOPLASTIC (8", 120 mils)
TU - 3 ft. WHITE MINI SKIP
TV - WHITE CROSSWALK
TW - YELLOW SINGLE CENTER LINE
TX - YELLOW DOUBLE YELLOW CENTER LINE
---------- THERMOPLASTIC (12", 90 mils)
TY - WHITE GORE LINE
---------- THERMOPLASTIC (12", 120 mils)
TZ - 3 ft. WHITE MINI SKIP
---------- THERMOPLASTIC (16", 120 mils)
T1 - WHITE LINE FOR RR CROSS BUCK
---------- THERMOPLASTIC (24", 120 mils)
T2 - WHITE STOP BAR
T3 - WHITE CROSSWALK LINE
---------- THERMOPLASTIC (4", 240 mils)
T4 - WHITE RUMBLE STRIP
T5 - YELLOW RUMBLE STRIP

PAVEMENT MARKING SYMBOLS
---------- THERMOPLASTIC (90 mils)

UB - RIGHT TURN ARROW
UA - LEFT TURN ARROW
UC - STRAIGHT ARROW
UD - COMBINATION STRAIGHT & LEFT TURN ARROW
UE - COMBINATION STRAIGHT & RIGHT TURN ARROW
UF - COMBINATION LEFT & RIGHT TURN ARROW
UG - COMBINATION LEFT, RIGHT, & STRAIGHT ARROW

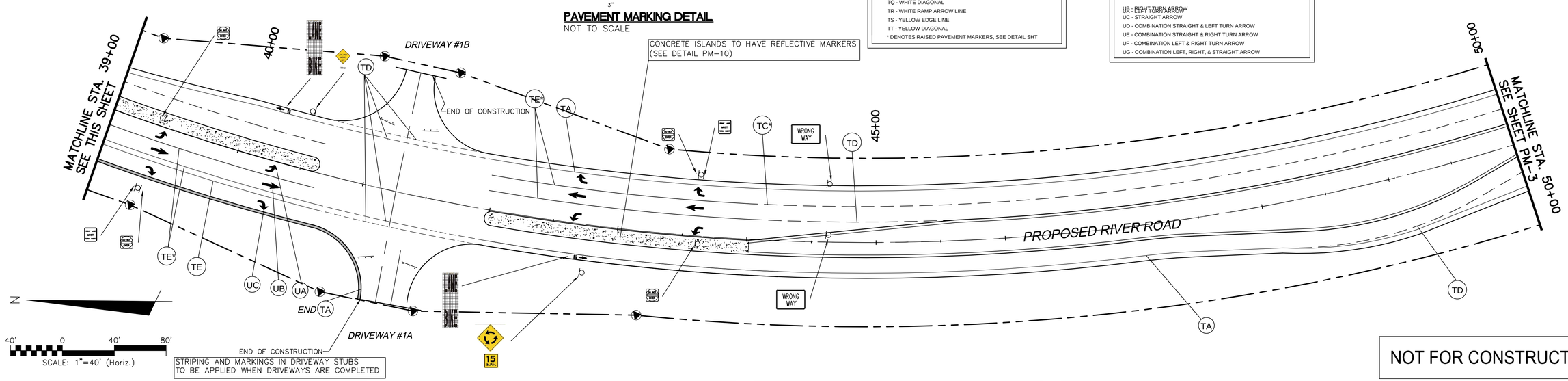

NOT FOR CONSTRUCTION

REV.NO.	DESCRIPTIONS	DATE

REVISIONS

SEAL

SEAL 022574 ENGINEER RICHARD M. CLIFFORD NORTH CAROLINA
10/03/2014

McKIM&CREED
243 North Front Street
Wilmington, North Carolina 28401
Phone: (910)343-1048 , Fax: (910)251-8282
License: F-1222
www.mckimcreed.com

Newland COMMUNITIES
NASH North America Scania House, LLC

RIVER ROAD

PAVEMENT MARKING AND SIGN PLANS
PROPOSED RIVER ROAD
STA 28+00 TO STA 50+00

DATE:	SEPTEMBER 2014
MCE PROJ. #	2735-0007
DRAWN	
DESIGNED	
CHECKED	RMC
PROJ. MGR.	RMC

SCALE
HORIZONTAL: 1"=40'
VERTICAL: N/A

M&C FILE NUMBER CP-102
DRAWING NUMBER PM-2

STATUS: FINAL DESIGN PLANS
REVISION

S:\2735\0007\80-Drawings\CP102-027350007.dwg, 10/3/2014 12:22:47 PM, rilaurietta,
ANSI D (22.00 x 34.00 Inches), 1:1

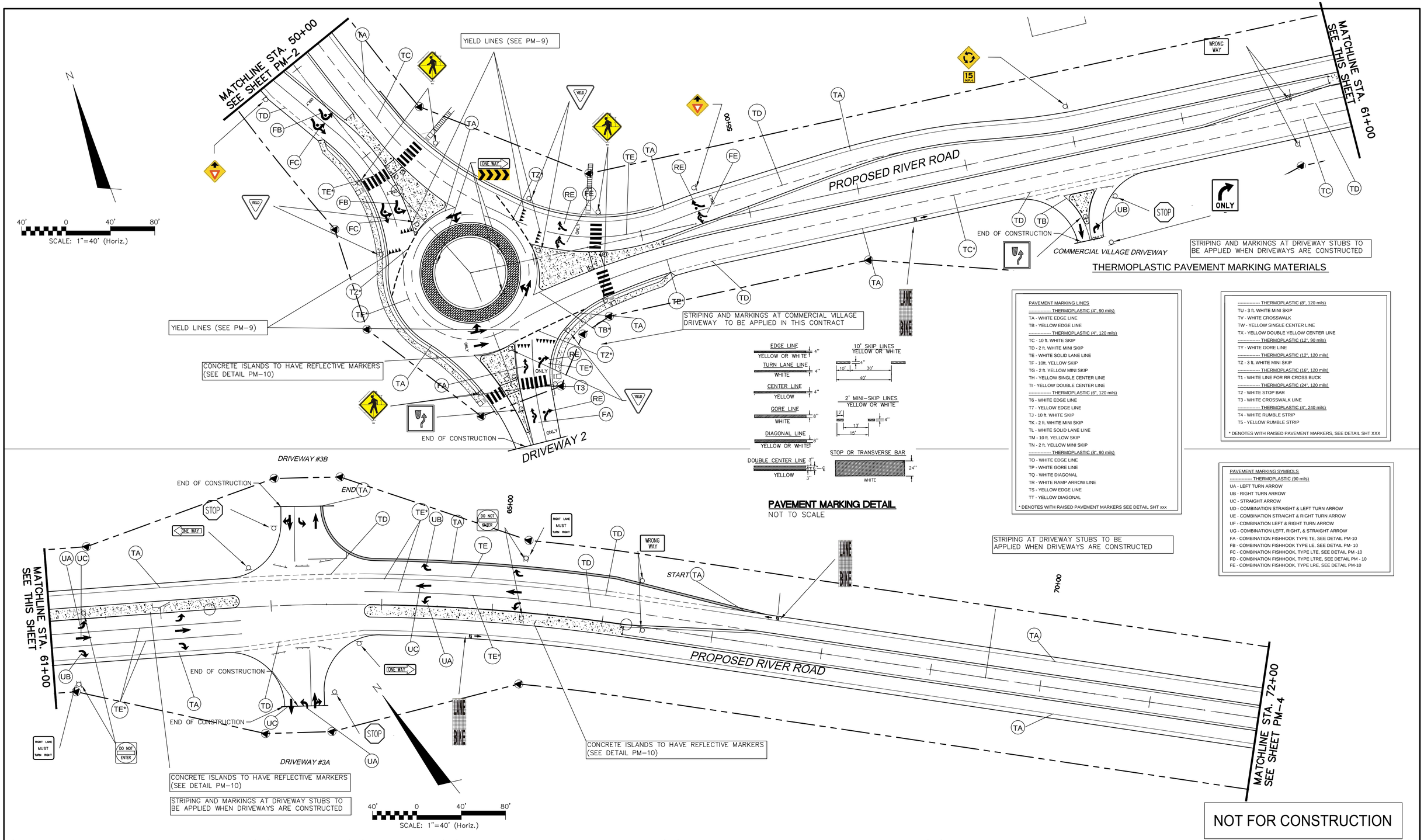

THERMOPLASTIC PAVEMENT MARKING MATERIALS

PAVEMENT MARKING LINES

---------- THERMOPLASTIC (4", 90 mils)
TA - WHITE EDGE LINE
TB - YELLOW EDGE LINE

---------- THERMOPLASTIC (4", 120 mils)
TC - 10 ft. WHITE SKIP
TD - 2 ft. WHITE MINI SKIP
TE - WHITE SOLID LANE LINE
TF - 10ft. YELLOW SKIP
TG - 2 ft. YELLOW MINI SKIP
TH - YELLOW SINGLE CENTER LINE
TI - YELLOW DOUBLE CENTER LINE

---------- THERMOPLASTIC (6", 120 mils)
T6 - WHITE EDGE LINE
T7 - YELLOW EDGE LINE
TJ - 10 ft. WHITE SKIP
TK - 2 ft. WHITE MINI SKIP
TL - WHITE SOLID LANE LINE
TM - 10 ft. YELLOW SKIP
TN - 2 ft. YELLOW MINI SKIP

---------- THERMOPLASTIC (8", 90 mils)
TO - WHITE EDGE LINE
TP - WHITE GORE LINE
TQ - WHITE DIAGONAL
TR - WHITE RAMP ARROW LINE
TS - YELLOW EDGE LINE
TT - YELLOW DIAGONAL

* DENOTES WITH RAISED PAVEMENT MARKERS SEE DETAIL SHT xxx

---------- THERMOPLASTIC (8", 120 mils)
TU - 3 ft. WHITE MINI SKIP
TV - WHITE CROSSWALK
TW - YELLOW SINGLE CENTER LINE
TX - YELLOW DOUBLE YELLOW CENTER LINE

---------- THERMOPLASTIC (12", 90 mils)
TY - WHITE GORE LINE

---------- THERMOPLASTIC (12", 120 mils)
TZ - 3 ft. WHITE MINI SKIP

---------- THERMOPLASTIC (16", 120 mils)
T1 - WHITE LINE FOR RR CROSS BUCK

---------- THERMOPLASTIC (24", 120 mils)
T2 - WHITE STOP BAR
T3 - WHITE CROSSWALK LINE

---------- THERMOPLASTIC (4", 240 mils)
T4 - WHITE RUMBLE STRIP
T5 - YELLOW RUMBLE STRIP

* DENOTES WITH RAISED PAVEMENT MARKERS, SEE DETAIL SHT XXX

PAVEMENT MARKING SYMBOLS

---------- THERMOPLASTIC (90 mils)
UA - LEFT TURN ARROW
UB - RIGHT TURN ARROW
UC - STRAIGHT ARROW
UD - COMBINATION STRAIGHT & LEFT TURN ARROW
UE - COMBINATION STRAIGHT & RIGHT TURN ARROW
UF - COMBINATION LEFT & RIGHT TURN ARROW
UG - COMBINATION LEFT, RIGHT, & STRAIGHT ARROW
FA - COMBINATION FISHHOOK TYPE TE, SEE DETAIL PM-10
FB - COMBINATION FISHHOOK TYPE LE, SEE DETAIL PM- 10
FC - COMBINATION FISHHOOK, TYPE LTE, SEE DETAIL PM - 10
FD - COMBINATION FISHHOOK, TYPE LTRE, SEE DETAIL PM - 10
FE - COMBINATION FISHHOOK, TYPE LRE, SEE DETAIL PM-10

PAVEMENT MARKING DETAIL

NOT TO SCALE

NOT FOR CONSTRUCTION

REV.NO.	DESCRIPTIONS	DATE

REVISIONS

SEAL

McKIM&CREED
243 North Front Street
Wilmington, North Carolina 28401
Phone: (910)343-1048 , Fax: (910)251-8282
License: F-1222
www.mckimcreed.com

Newland® COMMUNITIES

RIVER ROAD

PAVEMENT MARKING AND SIGN PLANS
PROPOSED RIVER ROAD
STA 50+00 TO STA 72+00

DATE:	SEPTEMBER 2014
MCE PROJ. #	2735-0007
DRAWN	
DESIGNED	
CHECKED	RMC
PROJ. MGR.	RMC

SCALE
HORIZONTAL: 1"=40'
VERTICAL: N/A

M&C FILE NUMBER CP-103
DRAWING NUMBER PM-3

STATUS: FINAL DESIGN PLANS
REVISION

S:\2735\0007\80-Drawings\CP103-027350007.dwg, 10/3/2014 12:23:44 PM, rilaurietta,
ANSI D (22.00 x 34.00 inches), 1:1

THERMOPLASTIC PAVEMENT MARKING MATERIALS

PAVEMENT MARKING LINES
---------- THERMOPLASTIC (4", 90 mils)
TA - WHITE EDGE LINE
TB - YELLOW EDGE LINE
---------- THERMOPLASTIC (4", 120 mils)
TC - 10 ft. WHITE SKIP
TD - 2 ft. WHITE MINI SKIP
TE - WHITE SOLID LANE LINE
TF - 10ft. YELLOW SKIP
TG - 2 ft. YELLOW MINI SKIP
TH - YELLOW SINGLE CENTER LINE
TI - YELLOW DOUBLE CENTER LINE
---------- THERMOPLASTIC (6", 120 mils)
T6 - WHITE EDGE LINE
T7 - YELLOW EDGE LINE
TJ - 10 ft. WHITE SKIP
TK - 2 ft. WHITE MINI SKIP
TL - WHITE SOLID LANE LINE
TM - 10 ft. YELLOW SKIP
TN - 2 ft. YELLOW MINI SKIP
---------- THERMOPLASTIC (8", 90 mils)
TO - WHITE EDGE LINE
TP - WHITE GORE LINE
TQ - WHITE DIAGONAL
TR - WHITE RAMP ARROW LINE
TS - YELLOW EDGE LINE
TT - YELLOW DIAGONAL
* DENOTES RAISED PAVEMENT MARKERS, SEE DETAIL SHT XXX

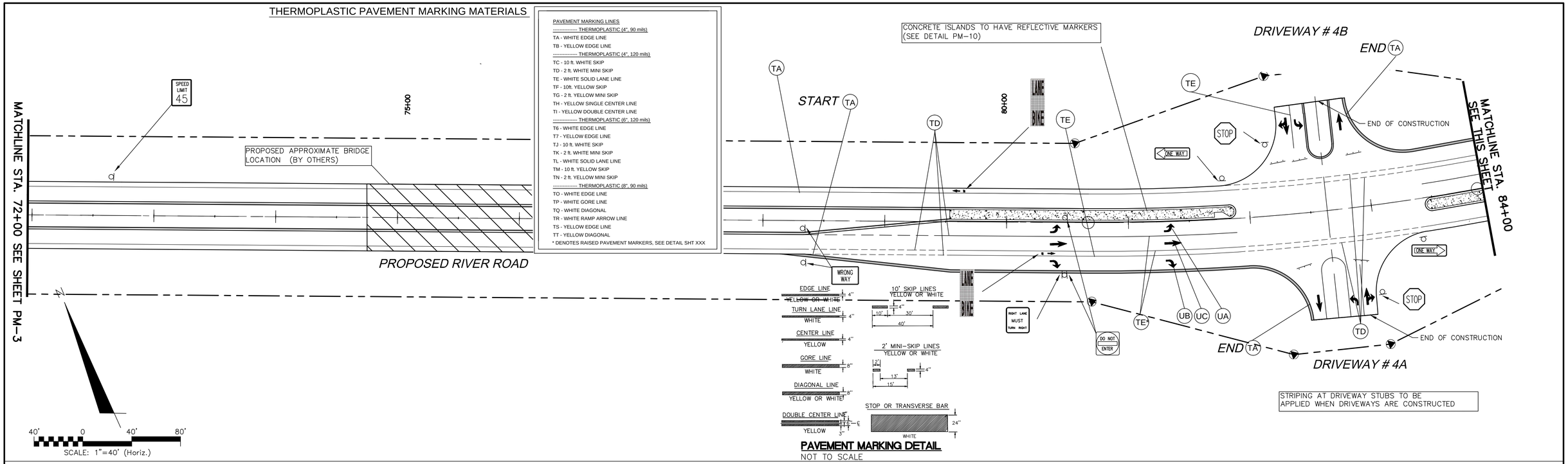

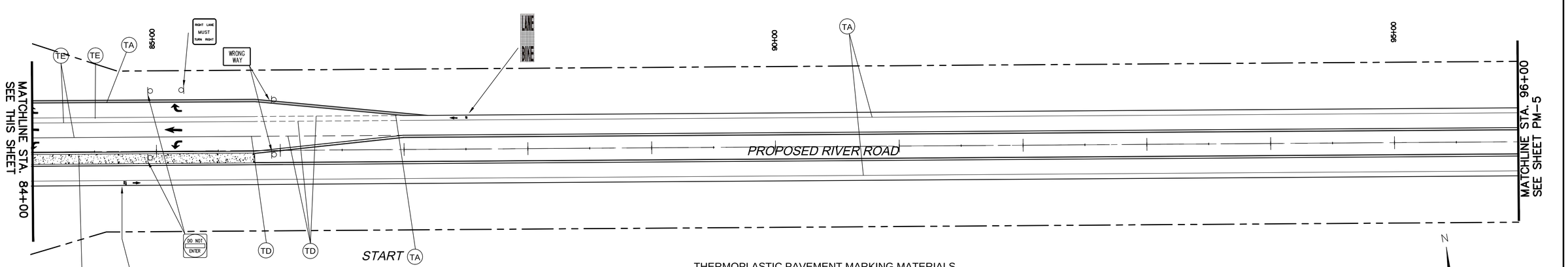

THERMOPLASTIC PAVEMENT MARKING MATERIALS

---------- THERMOPLASTIC (8", 120 mils)
TU - 3 ft. WHITE MINI SKIP
TV - WHITE CROSSWALK
TW - YELLOW SINGLE CENTER LINE
TX - YELLOW DOUBLE YELLOW CENTER LINE
---------- THERMOPLASTIC (12", 90 mils)
TY - WHITE GORE LINE
---------- THERMOPLASTIC (12", 120 mils)
TZ - 3 ft. WHITE MINI SKIP
---------- THERMOPLASTIC (16", 120 mils)
T1 - WHITE LINE FOR RR CROSS BUCK
---------- THERMOPLASTIC (24", 120 mils)
T2 - WHITE STOP BAR
T3 - WHITE CROSSWALK LINE
---------- THERMOPLASTIC (4", 240 mils)
T4 - WHITE RUMBLE STRIP
T5 - YELLOW RUMBLE STRIP

PAVEMENT MARKING SYMBOLS
---------- THERMOPLASTIC (90 mils)
UA - LEFT TURN ARROW
UB - RIGHT TURN ARROW
UC - STRAIGHT ARROW
UD - COMBINATION STRAIGHT & LEFT TURN ARROW
UE - COMBINATION STRAIGHT & RIGHT TURN ARROW
UF - COMBINATION LEFT & RIGHT TURN ARROW
UG - COMBINATION LEFT, RIGHT, & STRAIGHT ARROW

NOT FOR CONSTRUCTION

REV.NO.	DESCRIPTIONS	DATE

REVISIONS

SEAL

SEAL 022574 ENGINEER RICHARD M. CLAYTON JR. 10/03/2014

McKIM&CREED
243 North Front Street
Wilmington, North Carolina 28401
Phone: (910)343-1048 , Fax: (910)251-8282
License: F-1222
www.mckimcreed.com

Newland® COMMUNITIES
NORTH AMERICA SCOTSH HOUSE, LLC

RIVER ROAD

PAVEMENT MARKING AND SIGN PLANS
PROPOSED RIVER ROAD
STA 72+00 TO STA 96+00

DATE:	SEPTEMBER 2014
MCE PROJ. #	2735-0007
DRAWN	
DESIGNED	
CHECKED	RMC
PROJ. MGR.	RMC

SCALE
HORIZONTAL: 1"=40'
VERTICAL: N/A

M&C FILE NUMBER CP-104
DRAWING NUMBER PM-4

STATUS: FINAL DESIGN PLANS
REVISION

S:\2735\0007\90-Drawings\CP104-027350007.dwg, 10/3/2014 12:24:41 PM, rdaurietta,
ANSI D (22.00 x 34.00 Inches), 1:1

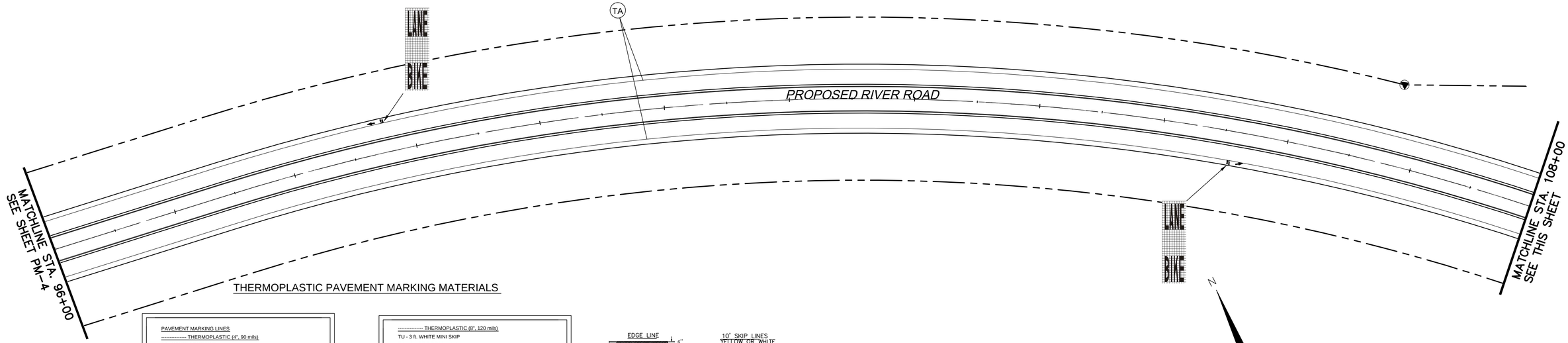

THERMOPLASTIC PAVEMENT MARKING MATERIALS

PAVEMENT MARKING LINES

---------- THERMOPLASTIC (4", 90 mils)
TA - WHITE EDGE LINE
TB - YELLOW EDGE LINE
---------- THERMOPLASTIC (4", 120 mils)
TC - 10 ft. WHITE SKIP
TD - 2 ft. WHITE MINI SKIP
TE - WHITE SOLID LANE LINE
TF - 10ft. YELLOW SKIP
TG - 2 ft. YELLOW MINI SKIP
TH - YELLOW SINGLE CENTER LINE
TI - YELLOW DOUBLE CENTER LINE
---------- THERMOPLASTIC (6", 120 mils)
T6 - WHITE EDGE LINE
T7 - YELLOW EDGE LINE
TJ - 10 ft. WHITE SKIP
TK - 2 ft. WHITE MINI SKIP
TL - WHITE SOLID LANE LINE
TM - 10 ft. YELLOW SKIP
TN - 2 ft. YELLOW MINI SKIP
---------- THERMOPLASTIC (8", 90 mils)
TO - WHITE EDGE LINE
TP - WHITE GORE LINE
TQ - WHITE DIAGONAL
TR - WHITE RAMP ARROW LINE
TS - YELLOW EDGE LINE
TT - YELLOW DIAGONAL

* DENOTES RAISED PAVEMENT MARKINGS, SEE DETAIL SHT XXX

---------- THERMOPLASTIC (8", 120 mils)
TU - 3 ft. WHITE MINI SKIP
TV - WHITE CROSSWALK
TW - YELLOW SINGLE CENTER LINE
TX - YELLOW DOUBLE YELLOW CENTER LINE
---------- THERMOPLASTIC (12", 90 mils)
TY - WHITE GORE LINE
---------- THERMOPLASTIC (12", 120 mils)
TZ - 3 ft. WHITE MINI SKIP
---------- THERMOPLASTIC (16", 120 mils)
T1 - WHITE LINE FOR RR CROSS BUCK
---------- THERMOPLASTIC (24", 120 mils)
T2 - WHITE STOP BAR
T3 - WHITE CROSSWALK LINE
---------- THERMOPLASTIC (4", 240 mils)
T4 - WHITE RUMBLE STRIP
T5 - YELLOW RUMBLE STRIP

PAVEMENT MARKING SYMBOLS

---------- THERMOPLASTIC (90 mils)
UA - LEFT TURN ARROW
UB - RIGHT TURN ARROW
UC - STRAIGHT ARROW
UD - COMBINATION STRAIGHT & LEFT TURN ARROW
UE - COMBINATION STRAIGHT & RIGHT TURN ARROW
UF - COMBINATION LEFT & RIGHT TURN ARROW
UG - COMBINATION LEFT, RIGHT, & STRAIGHT ARROW

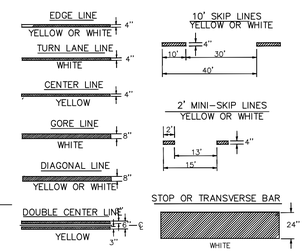

PAVEMENT MARKING DETAIL
NOT TO SCALE

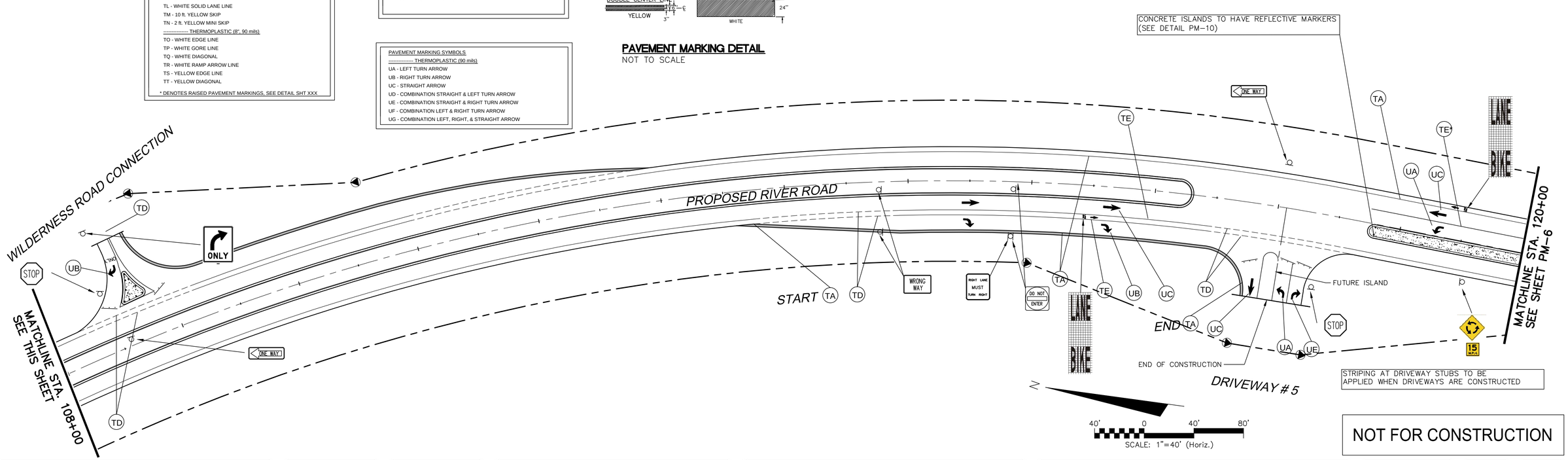

STRIPING AT DRIVEWAY STUBS TO BE APPLIED WHEN DRIVEWAYS ARE CONSTRUCTED

NOT FOR CONSTRUCTION

REV.NO.	DESCRIPTIONS	DATE
	REVISIONS	

SEAL

SEAL 022574 ENGINEER NORTH CAROLINA
10/03/2014

McKIM&CREED
243 North Front Street
Wilmington, North Carolina 28401
Phone: (910)343-1048 , Fax: (910)251-8282
License: F-1222
www.mckimcreed.com

Newland® COMMUNITIES

NASH North America Scrosia House, LLC

RIVER ROAD

PAVEMENT MARKING AND SIGN PLANS
PROPOSED RIVER ROAD
STA 96+00 – STA 120+00

DATE:	SEPTEMBER 2014
MCE PROJ. #	2735-0007
DRAWN	
DESIGNED	
CHECKED	RMC
PROJ. MGR.	RMC

SCALE
HORIZONTAL: 1"=40'
VERTICAL: N/A

M&C FILE NUMBER CP-105
DRAWING NUMBER PM-5

STATUS: FINAL DESIGN PLANS
REVISION

S:\2735\0007\90-Drawings\CP105-0273500007.dwg, 10/3/2014 12:26:35 PM, nburretta,
ANSI D (22.00 x 34.00 Inches), 1:1

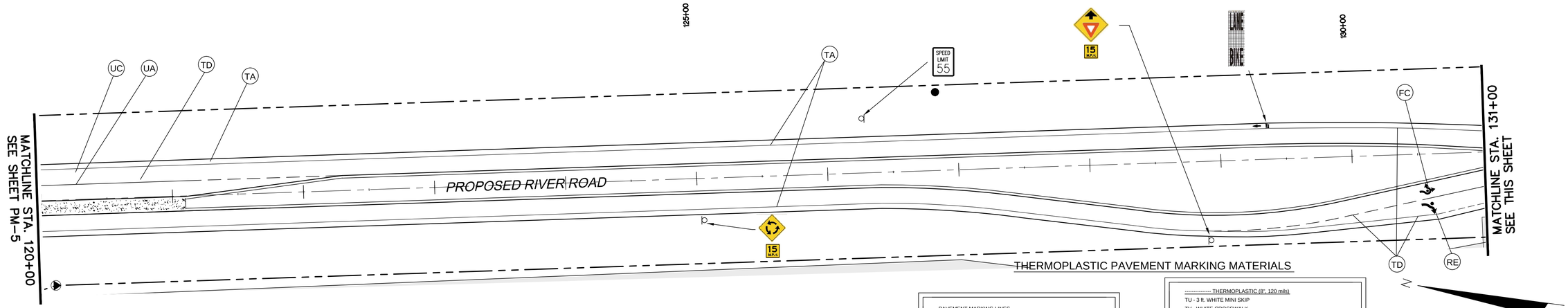

THERMOPLASTIC PAVEMENT MARKING MATERIALS

PAVEMENT MARKING LINES

---------- THERMOPLASTIC (4", 90 mils)
TA - WHITE EDGE LINE
TB - YELLOW EDGE LINE
---------- THERMOPLASTIC (4", 120 mils)
TC - 10 ft. WHITE SKIP
TD - 2 ft. WHITE MINI SKIP
TE - WHITE SOLID LANE LINE
TF - 10ft. YELLOW SKIP
TG - 2 ft. YELLOW MINI SKIP
TH - YELLOW SINGLE CENTER LINE
TI - YELLOW DOUBLE CENTER LINE
---------- THERMOPLASTIC (6", 120 mils)
T6 - WHITE EDGE LINE
T7 - YELLOW EDGE LINE
TJ - 10 ft. WHITE SKIP
TK - 2 ft. WHITE MINI SKIP
TL - WHITE SOLID LANE LINE
TM - 10 ft. YELLOW SKIP
TN - 2 ft. YELLOW MINI SKIP
---------- THERMOPLASTIC (8", 90 mils)
TO - WHITE EDGE LINE
TP - WHITE GORE LINE
TQ - WHITE DIAGONAL
TR - WHITE RAMP ARROW LINE
TS - YELLOW EDGE LINE
TT - YELLOW DIAGONAL

* DENOTES RAISED PAVEMENT MARKERS, SEE DETAIL SHT PM-10

---------- THERMOPLASTIC (8", 120 mils)
TU - 3 ft. WHITE MINI SKIP
TV - WHITE CROSSWALK
TW - YELLOW SINGLE CENTER LINE
TX - YELLOW DOUBLE YELLOW CENTER LINE
---------- THERMOPLASTIC (12", 90 mils)
TY - WHITE GORE LINE
---------- THERMOPLASTIC (12", 120 mils)
TZ - 3 ft. WHITE MINI SKIP
---------- THERMOPLASTIC (16", 120 mils)
T1 - WHITE LINE FOR RR CROSS BUCK
---------- THERMOPLASTIC (24", 120 mils)
T2 - WHITE STOP BAR
T3 - WHITE CROSSWALK LINE
---------- THERMOPLASTIC (4", 240 mils)
T4 - WHITE RUMBLE STRIP
T5 - YELLOW RUMBLE STRIP

PAVEMENT MARKING SYMBOLS

---------- THERMOPLASTIC (90 mils)
UA - LEFT TURN ARROW
UB - RIGHT TURN ARROW
UC - STRAIGHT ARROW
UD - COMBINATION STRAIGHT & LEFT TURN ARROW
UE - COMBINATION STRAIGHT & RIGHT TURN ARROW
UF - COMBINATION LEFT & RIGHT TURN ARROW
UG - COMBINATION LEFT, RIGHT, & STRAIGHT ARROW
FA - COMBINATION FISHHOOK TYPE TE, SEE DETAIL
FB - COMBINATION FISHHOOK TYPE LE, SEE DETAIL
FC - COMBINATION FISHHOOK, TYPE LTE, SEE DEATIL
FD - COMBINATION FISHHOOK, TYPE LTRE, SEE DETAIL

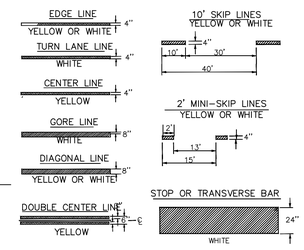

PAVEMENT MARKING DETAIL
NOT TO SCALE

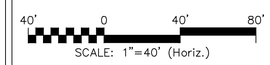

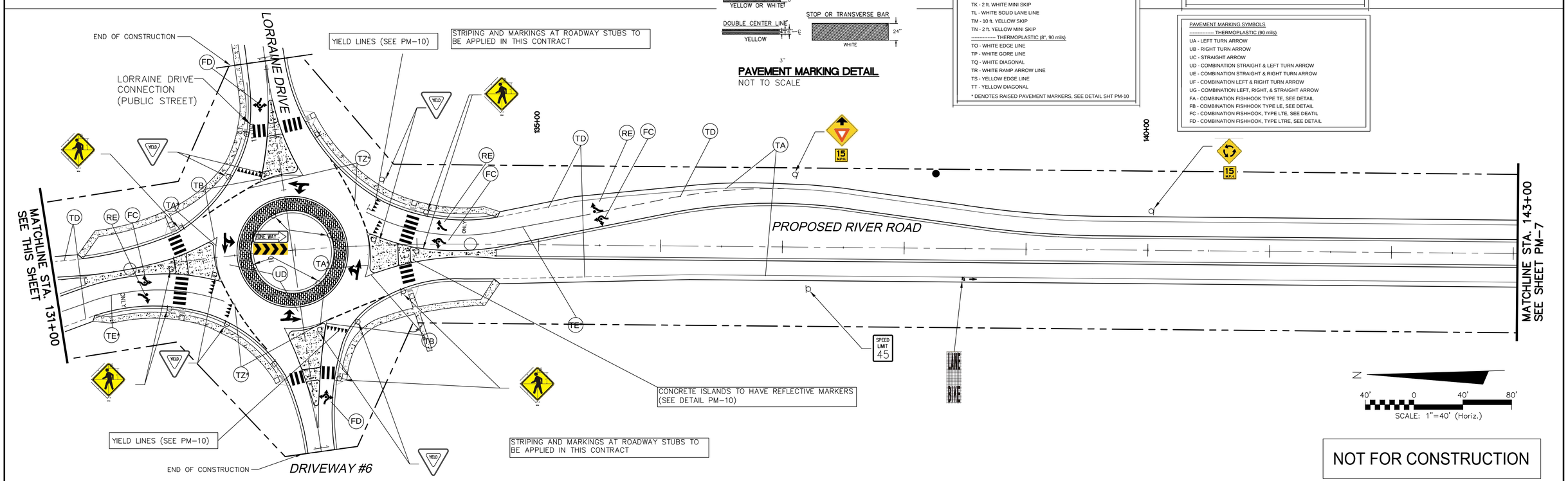

NOT FOR CONSTRUCTION

REV.NO.	DESCRIPTIONS	DATE

REVISIONS

SEAL

SEAL 022574 PROFESSIONAL ENGINEER RICHARD M. COLLIER 10/03/2014

McKIM&CREED
243 North Front Street
Wilmington, North Carolina 28401
Phone: (910)343-1048 , Fax: (910)251-8282
License: F-1222
www.mckimcreed.com

Newland COMMUNITIES

NAH North America Serious House, LLC

RIVER ROAD

PAVEMENT MARKING AND SIGN PLANS
PROPOSED RIVER ROAD
STA 120+00 – STA 143+00

DATE:	SEPTEMBER 2014
MCE PROJ. #	2735-0007
DRAWN	
DESIGNED	
CHECKED	RMC
PROJ. MGR.	RMC

SCALE
HORIZONTAL: 1"=40'
VERTICAL: N/A

M&C FILE NUMBER CP-106
DRAWING NUMBER PM-6

STATUS: FINAL DESIGN PLANS
REVISION

S:\2735\0007\80-Drawings\CP106-027350007.dwg, 10/3/2014 12:26:31 PM, nlaureta,
ANSI D (22.00 x 34.00 Inches), 1:1

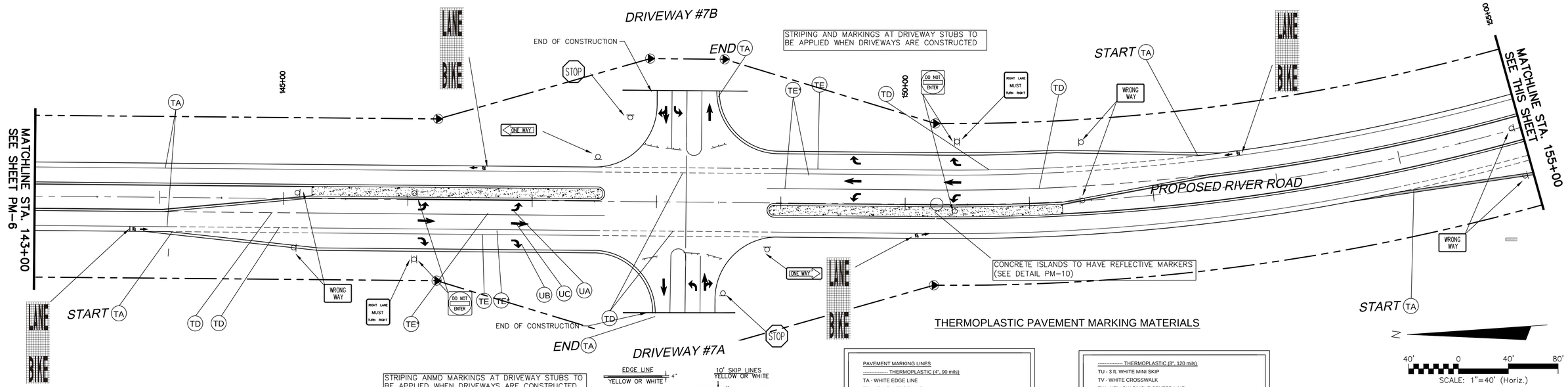

THERMOPLASTIC PAVEMENT MARKING MATERIALS

PAVEMENT MARKING LINES

---------- THERMOPLASTIC (4", 90 mils)
TA - WHITE EDGE LINE
TB - YELLOW EDGE LINE
---------- THERMOPLASTIC (4", 120 mils)
TC - 10 ft. WHITE SKIP
TD - 2 ft. WHITE MINI SKIP
TE - WHITE SOLID LANE LINE
TF - 10ft. YELLOW SKIP
TG - 2 ft. YELLOW MINI SKIP
TH - YELLOW SINGLE CENTER LINE
TI - YELLOW DOUBLE CENTER LINE
---------- THERMOPLASTIC (6", 120 mils)
T6 - WHITE EDGE LINE
T7 - YELLOW EDGE LINE
TJ - 10 ft. WHITE SKIP
TK - 2 ft. WHITE MINI SKIP
TL - WHITE SOLID LANE LINE
TM - 10 ft. YELLOW SKIP
TN - 2 ft. YELLOW MINI SKIP
---------- THERMOPLASTIC (8", 90 mils)
TO - WHITE EDGE LINE
TP - WHITE GORE LINE
TQ - WHITE DIAGONAL
TR - WHITE RAMP ARROW LINE
TS - YELLOW EDGE LINE
TT - YELLOW DIAGONAL

* DENOTES RAISED PAVEMENT MARKERS, SEE DETAIL SHT. PM-10

---------- THERMOPLASTIC (8", 120 mils)
TU - 3 ft. WHITE MINI SKIP
TV - WHITE CROSSWALK
TW - YELLOW SINGLE CENTER LINE
TX - YELLOW DOUBLE YELLOW CENTER LINE
---------- THERMOPLASTIC (12", 90 mils)
TY - WHITE GORE LINE
---------- THERMOPLASTIC (12", 120 mils)
TZ - 3 ft. WHITE MINI SKIP
---------- THERMOPLASTIC (16", 120 mils)
T1 - WHITE LINE FOR RR CROSS BUCK
---------- THERMOPLASTIC (24", 120 mils)
T2 - WHITE STOP BAR
T3 - WHITE CROSSWALK LINE
---------- THERMOPLASTIC (4", 240 mils)
T4 - WHITE RUMBLE STRIP
T5 - YELLOW RUMBLE STRIP

PAVEMENT MARKING SYMBOLS

---------- THERMOPLASTIC (90 mils)
UA - LEFT TURN ARROW
UB - RIGHT TURN ARROW
UC - STRAIGHT ARROW
UD - COMBINATION STRAIGHT & LEFT TURN ARROW
UE - COMBINATION STRAIGHT & RIGHT TURN ARROW
UF - COMBINATION LEFT & RIGHT TURN ARROW
UG - COMBINATION LEFT, RIGHT, & STRAIGHT ARROW

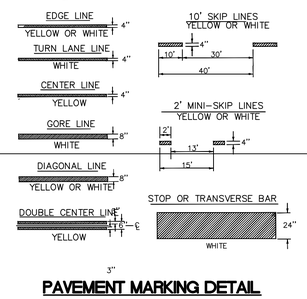

PAVEMENT MARKING DETAIL
NOT TO SCALE

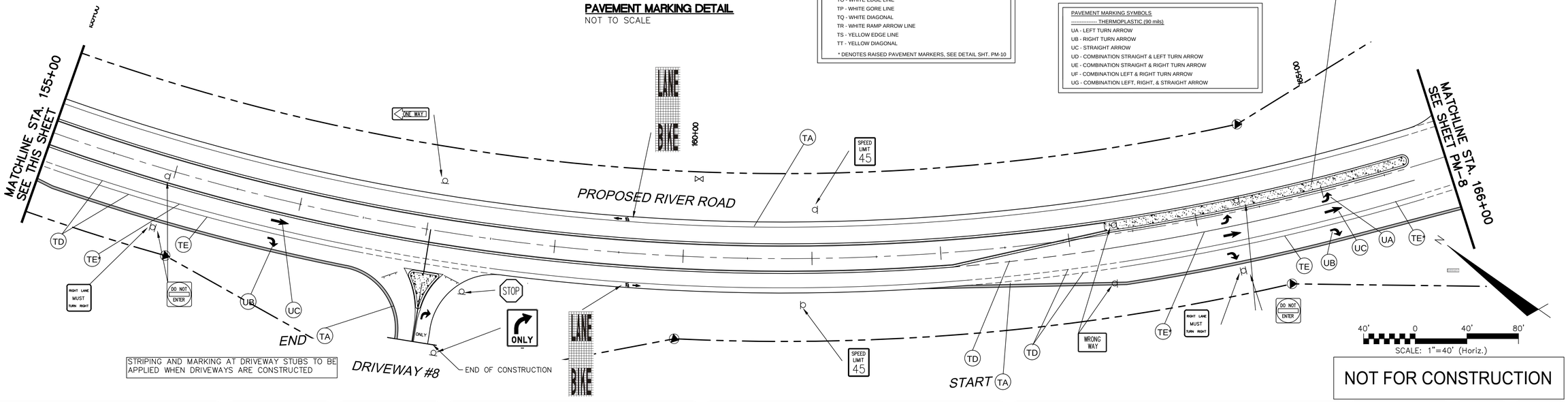

NOT FOR CONSTRUCTION

REV.NO.	DESCRIPTIONS	DATE

REVISIONS

SEAL

SEAL 022574 NORTH CAROLINA PROFESSIONAL ENGINEER RICHARD M. CULLER
10/03/2014

McKIM&CREED
243 North Front Street
Wilmington, North Carolina 28401
Phone: (910)343-1048 , Fax: (910)251-8282
License: F-1222
www.mckimcreed.com

Newland COMMUNITIES

NASH North America Sickle House, LLC

RIVER ROAD

PAVEMENT MARKING AND SIGN PLANS
PROPOSED RIVER ROAD
STA 143+00 – STA 166+00

DATE:	SEPTEMBER 2014
MCE PROJ. #	2735-0007
DRAWN	
DESIGNED	
CHECKED	RMC
PROJ. MGR.	RMC

SCALE
HORIZONTAL: 1"=40'
VERTICAL: N/A

M&C FILE NUMBER CP-107
DRAWING NUMBER PM-7

STATUS: FINAL DESIGN PLANS
REVISION

S:\2735\0007\80-Drawings\CP107-027350007.dwg, 10/2/2014 12:41:53 PM, kespinoza, ANSI D (22.00 x 34.00 Inches), 1:1

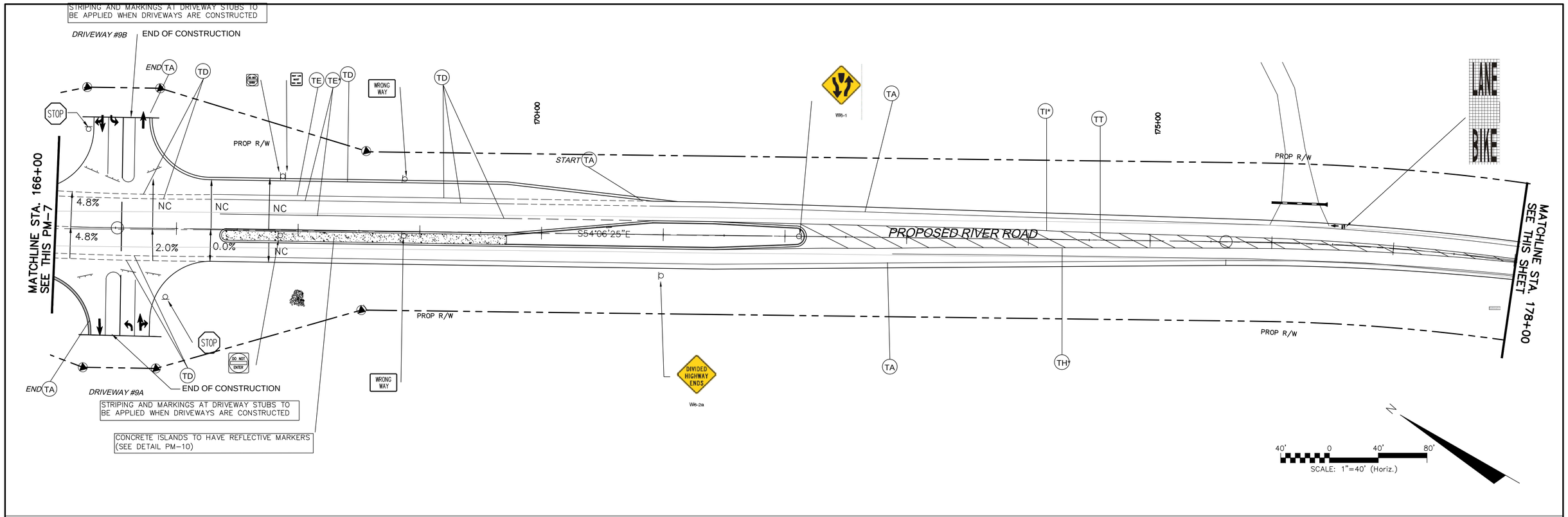

THERMOPLASTIC PAVEMENT MARKING MATERIALS

PAVEMENT MARKING LINES

---------- THERMOPLASTIC (4", 90 mils)
TA - WHITE EDGE LINE
TB - YELLOW EDGE LINE
---------- THERMOPLASTIC (4", 120 mils)
TC - 10 ft. WHITE SKIP
TD - 2 ft. WHITE MINI SKIP
TE - WHITE SOLID LANE LINE
TF - 10ft. YELLOW SKIP
TG - 2 ft. YELLOW MINI SKIP
TH - YELLOW SINGLE CENTER LINE
TI - YELLOW DOUBLE CENTER LINE
---------- THERMOPLASTIC (6", 120 mils)
T6 - WHITE EDGE LINE
T7 - YELLOW EDGE LINE
TJ - 10 ft. WHITE SKIP
TK - 2 ft. WHITE MINI SKIP
TL - WHITE SOLID LANE LINE
TM - 10 ft. YELLOW SKIP
TN - 2 ft. YELLOW MINI SKIP
---------- THERMOPLASTIC (8", 90 mils)
TO - WHITE EDGE LINE
TP - WHITE GORE LINE
TQ - WHITE DIAGONAL
TR - WHITE RAMP ARROW LINE
TS - YELLOW EDGE LINE
TT - YELLOW DIAGONAL

* DENOTES RAISED PAVEMENT MARKERS, SEE DETAIL SHT. PM-10

---------- THERMOPLASTIC (8", 120 mils)
TU - 3 ft. WHITE MINI SKIP
TV - WHITE CROSSWALK
TW - YELLOW SINGLE CENTER LINE
TX - YELLOW DOUBLE YELLOW CENTER LINE
---------- THERMOPLASTIC (12", 90 mils)
TY - WHITE GORE LINE
---------- THERMOPLASTIC (12", 120 mils)
TZ - 3 ft. WHITE MINI SKIP
---------- THERMOPLASTIC (16", 120 mils)
T1 - WHITE LINE FOR RR CROSS BUCK
---------- THERMOPLASTIC (24", 120 mils)
T2 - WHITE STOP BAR
T3 - WHITE CROSSWALK LINE
---------- THERMOPLASTIC (4", 240 mils)
T4 - WHITE RUMBLE STRIP
T5 - YELLOW RUMBLE STRIP

PAVEMENT MARKING SYMBOLS

---------- THERMOPLASTIC (90 mils)
UA - LEFT TURN ARROW
UB - RIGHT TURN ARROW
UC - STRAIGHT ARROW
UD - COMBINATION STRAIGHT & LEFT TURN ARROW
UE - COMBINATION STRAIGHT & RIGHT TURN ARROW
UF - COMBINATION LEFT & RIGHT TURN ARROW
UG - COMBINATION LEFT, RIGHT, & STRAIGHT ARROW

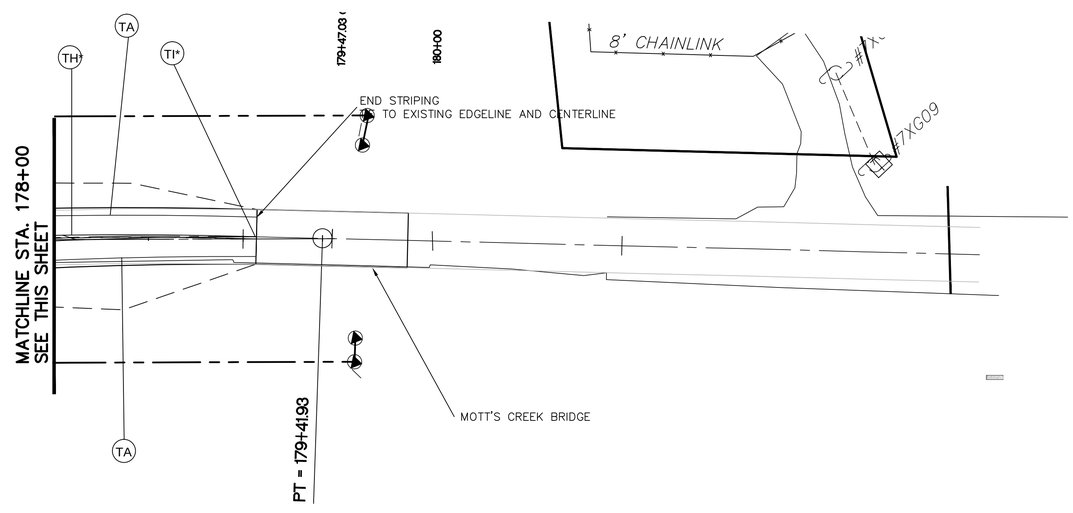

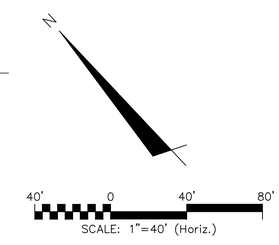

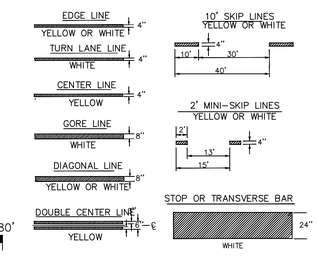

PAVEMENT MARKING DETAIL
NOT TO SCALE

NOT FOR CONSTRUCTION

REV.NO.	DESCRIPTIONS	DATE

REVISIONS

SEAL

SEAL 022574 ENGINEER NORTH CAROLINA
10/03/2014

McKIM&CREED
243 North Front Street
Wilmington, North Carolina 28401
Phone: (910)343-1048 , Fax: (910)251-8282
License: F-1222
www.mckimcreed.com

Newland® COMMUNITIES

NORTH AMERICA SCOTSH HOUSE, LLC

RIVER ROAD

PAVEMENT MARKING AND SIGN PLANS
PROPOSED RIVER ROAD
STA 166+00 – STA 179+47

DATE:	SEPTEMBER 2014
MCE PROJ. #	2735-0007
DRAWN	
DESIGNED	
CHECKED	RMC
PROJ. MGR.	RMC

SCALE
HORIZONTAL: 1"=40'
VERTICAL: N/A

M&C FILE NUMBER CP-108
DRAWING NUMBER PM-8

STATUS: FINAL DESIGN PLANS
REVISION

U:\2735\0007\00-Drawings\CP108-02735\0007.dwg, 10/3/2014 12:47:36 PM, kespinoza, ANSI full bleed D (22.00 x 34.00 Inches), 1:1

STATE OF NORTH CAROLINA DEPT. OF TRANSPORTATION DIVISION OF HIGHWAYS RALEIGH, N.C.

ENGLISH STANDARD DRAWING FOR **PAVEMENT MARKINGS** LINE TYPES AND OFFSETS

CONTINUOUS LINES

EDGE LINE — YELLOW ON WHITE — 4"/6"

LANE LINE — WHITE — 4"/6"

CENTER LINE — YELLOW — 4"/6"

GORE LINE — WHITE — 8"/12"

DIAGONAL LINE — YELLOW OR WHITE — 12" 45 MPH OR HIGHER; 8" LESS THAN 45 MPH

CROSSWALK LINE — WHITE — 8" TRANSVERSE, 24" LONGITUDINAL

RxR LINE — WHITE — 16"

STOP OR TRANSVERSE BAR — WHITE — 24"

10'-30'/SP SKIP LINE

UNLESS OTHERWISED SHOWN, USE 10'-30'/SP SKIPS FOR SKIP LANE LINES AND SKIP CENTER LINES.

10' 30' 4"/6" YELLOW ON WHITE

2'-6'/SP MINI-SKIP LINE

UNLESS OTHERWISED SHOWN, USE 2'-6'/SP MINI-SKIPS FOR EDGE LINE EXTENSIONS AT INTERSECTIONS, EDGE LINE EXTENSIONS THROUGH INTERSECTIONS AND MINI-SKIPS USED FOR BICYCLE LANE LINES.

2' 6' 4"/6" YELLOW OR WHITE

3'-3'/SP MINI-SKIP LINE

UNLESS OTHERWISED SHOWN, USE 3'-3'/SP MINI-SKIPS FOR THE WHITE EDGE LINE EXTENDING AT ROUNDABOUTS.

3' 3' 12" WHITE

3'-9'/SP MINI-SKIP LINE

UNLESS OTHERWISED SHOWN, USE 3'-9'/SP MINI-SKIPS FOR MINI-SKIP LANE LINES AND LINE EXTENSIONS THROUGH TAPERS.

3' 9' 4"/6" WHITE

GENERAL NOTES:

1- USE 6" LANE, EDGE, AND CENTER LINES ON ALL FULL CONTROL OF ACCESS FACILITIES AND OTHER ROUTES AS DIRECTED BY THE ENGINEER.

2- LANE LINES INDICATED AS "WIDE" ON THE ROADWAY STANDARD DRAWINGS SHALL BE AT LEAST TWICE THE WIDTH OF THE NORMAL LINE.

3- GORE LINES SHALL BE TWICE THE WIDTH OF THE NORMAL LINE.

SHEET 1 OF 2 — 1205.01

STATE OF NORTH CAROLINA DEPT. OF TRANSPORTATION DIVISION OF HIGHWAYS RALEIGH, N.C.

ENGLISH STANDARD DRAWING FOR **PAVEMENT MARKINGS** LINE TYPES AND OFFSETS

EDGE LINE OFFSET DETAIL

WHITE OR YELLOW EDGE LINE — 2" MAX., REFER ALSO TO TABLE 1 — E.O.T.

CENTER LINE OFFSET DETAIL

YELLOW CENTER LINE — 3" 3" 6"

YELLOW CENTER LINE

LANE LINE OFFSET DETAIL

WHITE LANE LINE — 2" TOWARDS LEFT SIDE OF TRAVELWAY

TABLE 1

EDGE LINE OFFSETS FOR 2-LANE, 2-WAY ROADWAYS WITH UN-PAVED SHOULDERS

WIDTH (W) OF TRAVEL PAVEMENT	MAX. EDGE LINE OFFSET FROM E.O.T.	MINIMUM LANE WIDTH (W)
16' - 18'	2"	8' - 9'
19'	4"	9'
20'	6"	9.5'
21'	8"	10'
22'	10"	10'
23'	10"	10.5'
24'	1'	11'
26'	2'	11'
28'	2'	12'
30'	3'	12'
32'	4'	12'

LEGEND

W = WIDTH OF TRAVEL LANE

E.O.T.= EDGE OF TRAVEL

DIRECTION OF TRAFFIC FLOW

TWO-WAY UNDIVIDED ROADWAY

SEE EDGE LINE OFFSET DETAIL — SEE CENTER LINE OFFSET DETAIL

TWO-WAY UNDIVIDED ROADWAY WITH TWO-WAY LEFT TURN LANE

SEE EDGE LINE OFFSET DETAIL — SEE CENTER LINE OFFSET DETAIL

MULTI-LANE ROADWAY

SEE EDGE LINE OFFSET DETAIL — SEE LANE LINE OFFSET DETAIL

SHEET 2 OF 2 — 1205.01

STATE OF NORTH CAROLINA DEPT. OF TRANSPORTATION DIVISION OF HIGHWAYS RALEIGH, N.C.

ENGLISH STANDARD DRAWING FOR **PAVEMENT MARKINGS** TWO-LANE AND MULTI-LANE ROADWAYS

TWO-LANE, TWO-WAY ROADWAY

SHOULDER — WHITE EDGE LINES — YELLOW SKIP CENTER LINES, PASSING SIDE — E.O.T.

SHOULDER — YELLOW SKIP CENTER LINES — YELLOW CENTER LINE, NO PASSING SIDE — DOUBLE YELLOW CENTER LINE (TWO YELLOW CENTER LINES) — E.O.T.

PASSING ZONE - BOTH DIRECTIONS — PASSING ZONE - SIGNAL DIRECTION — NO-PASSING ZONE - BOTH DIRECTIONS

PASSING/NO PASSING ZONES WILL BE DETERMINED BY THE ENGINEER.

TWO-LANE, TWO-WAY ROADWAY WITH TWO-WAY LEFT TURN LANE

320' TYPICAL SPACING BETWEEN SETS OF ARROW SYMBOLS

SPACING CAN BE INCREASED OR DECREASED AS DETERMINED BY THE ENGINEER

SHOULDER — WHITE EDGE LINES — E.O.T. — 10' 10' — SHOULDER — YELLOW SKIP CENTER LINES — YELLOW CENTER LINES — E.O.T.

GENERAL NOTES:

1- EDGE LINES ARE NOT REQUIRED ALONG CURB AND GUTTER LOCATIONS.

2- CONTINUE EDGE LINES THROUGH MINOR DRIVEWAYS. DO NOT CONTINUE EDGE LINES AT INTERSECTIONS AND MAJOR DRIVEWAYS. SEE ROADWAY STANDARD DRAWING 1205.05 FOR ADDITIONAL GUIDANCE.

3- REFER TO ROADWAY STANDARD DRAWINGS 1205.01 AND 1205.08 FOR ADDITIONAL PAVEMENT MARKING GUIDANCE.

LEGEND

W = WIDTH OF TRAVEL LANE

E.O.T.= EDGE OF TRAVEL

DIRECTION OF TRAFFIC FLOW

PAVEMENT MARKING SYMBOLS

SHEET 1 OF 2 — 1205.02

STATE OF NORTH CAROLINA DEPT. OF TRANSPORTATION DIVISION OF HIGHWAYS RALEIGH, N.C.

ENGLISH STANDARD DRAWING FOR **PAVEMENT MARKINGS** INTERSECTIONS

TWO-LANE, TWO-WAY ROADWAY

STOP BAR, SEE NOTE 1 — WHITE 2'-6'/SP MINI-SKIP LINE, SEE NOTE 3 — 10' TYP.

TWO-LANE, TWO-WAY ROADWAY WITH TWO-WAY LEFT TURN LANE

STOP BAR, SEE NOTE 1 — WHITE 2'-6'/SP MINI-SKIP LINE, SEE NOTE 3 — YELLOW 2'-6'/SP MINI-SKIP LINE — 10' TYP. — 160'

UNDIVIDED MULTI-LANE ROADWAY

STOP BAR, SEE NOTE 1 — WHITE 2'-6'/SP MINI-SKIP LINE, SEE NOTE 3 — 150' 60' 10' TYP. — WHITE 2'-6'/SP MINI-SKIP LINES, SEE NOTE 2

DIVIDED MULTI-LANE ROADWAY WITH TURN BAY

STOP BAR, SEE NOTE 1 — WHITE 2'-6'/SP MINI-SKIP LINE, SEE NOTE 3 — YELLOW 2'-6'/SP MINI-SKIP LINE — MONOLITHIC ISLANDS MAY BE OUTLINED WITH EDGE LINES — MEDIAN — CONTINUE EDGE LINE AROUND MEDIAN — 150' 60' — REFER TO STD. 1205.02 FOR TURN LANE MARKING GUIDANCE — WHITE 2'-6'/SP MINI-SKIP LINE

DIVIDED MULTI-LANE ROADWAY WITH WIDE MEDIAN CROSSOVER

STOP BAR, SEE NOTE 1 — WHITE 2'-6'/SP MINI-SKIP LINE, SEE NOTE 9 — CONTINUE EDGE LINE AROUND MEDIAN — YELLOW 2'-6'/SP MINI-SKIP LINES — MEDIAN — >30' REF. — 150' 60'

USE DOUBLE YELLOW CENTER LINE AND ARROW SYMBOLS IN MEDIAN CROSSOVER WHEN WIDTH OF MEDIAN EXCEEDS 30 FT, OTHERWISE THEY ARE NOT REQUIRED.

GENERAL NOTES:

1- PLACEMENT OF STOP BARS AT NON-SIGNALIZED INTERSECTIONS IS OPTIONAL AND USED WHERE IT IS IMPORTANT TO INDICATE THE POINT WHICH VEHICLES ARE REQUIRED TO STOP. PLACE STOP BARS NO LESS THAN 4 FEET AND NO MORE THAN 30 FEET FROM THE NEAREST EDGE OF THE INTERSECTING ROADWAY. USE 10 FEET AS THE TYPICAL SETBACK DISTANCE OR AS DIRECTED BY THE ENGINEER.

2- MINI-SKIP LANE LINE EXTENSIONS SHOULD BE USED AT INTERSECTIONS THAT HAVE REDUCED VISIBILITY CONDITIONS SUCH AS OFFSET, SKEWED, OR CURVED ROADWAYS.

3- MINI-SKIP EDGE LINE EXTENSIONS MAY BE PLACED THROUGH INTERSECTIONS AND MAJOR DRIVEWAYS.

4- REFER TO ROADWAY STANDARD DRAWINGS 1205.01, 1205.02, 1205.05, 1205.08 AND 1205.09 FOR ADDITIONAL PAVEMENT MARKING GUIDANCE.

LEGEND

STOP SIGN — STATIONARY SIGN

DIRECTION OF TRAFFIC FLOW — PAVEMENT MARKING SYMBOLS

OPTIONAL

SHEET 2 OF 2 — 1205.04

STATE OF NORTH CAROLINA DEPT. OF TRANSPORTATION DIVISION OF HIGHWAYS RALEIGH, N.C.

ENGLISH STANDARD DRAWING FOR **PAVEMENT MARKINGS** TURN LANES

DIRECT TAPER TURN LANE

END OF TAPER — WHITE 3'-9'/SP MINI-SKIP LINE — TAPER — 10'

TURN LANE BAYS < 125 FT.

WHITE LANE LINE — WHITE 3'-9'/SP MINI-SKIP LINE — TAPER — TURN LANE BAY — ARROW CENTERED IN TURN LANE BAY

TURN LANE BAYS 125 - 250 FT.

WHITE LANE LINE — WHITE 3'-9'/SP MINI-SKIP LINE — TAPER — 60' — TURN LANE BAY

TURN LANE BAYS 250 FT. OR GREATER

WHITE LANE LINE — CENTER BETWEEN FIRST AND LAST ARROWS — 250' — WHITE 3'-9'/SP MINI-SKIP LINE — TAPER — 60' — TURN LANE BAY

LEFT TURN LANE DEVELOPED FROM TWO-WAY TURN LANE

WHITE LANE LINE, ½ LENGTH OF BAY — CENTER BETWEEN FIRST AND LAST ARROWS — WHITE 3'-9'/SP MINI-SKIP LINE — TWO-WAY LEFT TURN LANE — 60' — TURN LANE BAY — 160'

DOUBLE TURN LANES

SAME PAVEMENT MARKING LINES, NUMBER OF ARROWS, AND ARROW SPACING APPLY AS FOR THE VARIOUS TURN LANE BAY LENGTHS SHOWN ABOVE

WHITE LANE LINE, ½ LENGHT OF BAY UP TO 125' MAX. — WHITE LANE LINE, LENGHT OF BAY UP TO 250' MAX. — WHITE SKIP LANE LINE — WHITE 3'-9'/SP MINI-SKIP LINE — WHITE 2'-6'/SP MINI-SKIP LINE — TAPER — 60' — CENTER BETWEEN FIRST AND LAST ARROWS — TURN LANE BAY

GENERAL NOTES:

1- USE THE GUIDANCE SHOWN ABOVE IN CONJUNCTION WITH THE INTERSECTION GUIDANCE SHOWN ON ROADWAY STANDARD DRAWING 1205.04.

2- THE NUMBER OF ARROWS SHOWN IS THE MINIMUM REQUIRED. USE ADDITIONAL ARROWS AS DIRECTED BY THE ENGINEER.

LEGEND

PAVEMENT MARKING SYMBOL

SHEET 1 OF 1 — 1205.05

STATE OF NORTH CAROLINA DEPT. OF TRANSPORTATION DIVISION OF HIGHWAYS RALEIGH, N.C.

ENGLISH STANDARD DRAWING FOR **PAVEMENT MARKINGS** PAINTED ISLANDS

CHANNELIZING ISLAND SEPARATING TRAFFIC IN SAME DIRECTION

WHITE GORE LINES — "D" — WHITE DIAGONAL LINES (CHEVRON)

MEDIAN ISLAND SEPARATING TRAFFIC IN OPPOSING DIRECTIONS

DOUBLE YELLOW CENTER LINES — "D" — YELLOW DIAGONAL LINES (2:1 SLOPE)

EDGE OF PAVEMENT OR SHOULDER ISLAND

MEDIAN SIDE E.O.T. OR SHOULDER — YELLOW EDGE LINE — YELLOW DIAGONAL LINES (2:1 SLOPE) — "D" — OUTSIDE E.O.T. OR SHOULDER — WHITE DIAGONAL LINE (2:1 SLOPE) — WHITE EDGE LINE

GENERAL NOTES:

1- "D" = SPACING OF DIAGONAL LINES (TYPICALLY EQUAL IN FEET TO THE POSTED SPEED LIMIT).

2- INCREASE SPACING OF DIAGONALS TO 200' OR MORE ON INTERSTATE ROADWAYS.

3- ADJUST SPACING OF DIAGONALS DEPENDING ON THE LENGTH OF THE ISLAND. SPACING MAY BE ADJUSTED AS DETERMINED BY THE ENGINEER.

LEGEND

E.O.T.= EDGE OF TRAVEL

DIRECTION OF TRAFFIC FLOW

SHEET 1 OF 1 — 1205.09

STOP	30" X 30" R1-1	ONE "U" POST PER SIGN
YIELD	36" X 36" X 36" R1-2	ONE "U" POST PER SIGN
SPEED LIMIT 55	26" X 40" R2-1	ONE "U" POST PER SIGN
RIGHT LANE MUST TURN RIGHT	30" X 30" R3-7R	ONE "U" POST PER SIGN
WRONG WAY	36" X 24" R5-1a	ONE "U" POST PER SIGN
KEEP RIGHT	24" X 30" R4-7	ONE "U" POST PER SIGN
DO NOT ENTER	30" X 30" R5-1	ONE "U" POST PER SIGN
W11-2	24" X 24" W11-2	ONE "U" POST PER SIGN
ONE WAY	36" X 12" R6-1L	TWO "U" POSTS PER SIGN
ONE WAY	36" X 12" R6-1R	TWO "U" POSTS PER SIGN
W6-1	36" X 36" W6-1	ONE "U" POST PER SIGN
PROVIDE 8' SPACING PRIOR TO ARROW; ONLY	"ONLY" PAVEMENT MARKING THERMOPLASTIC (90 MILS)	
	36" X 36" W2-6	ONE "U" POST PER SIGN
15 M.P.H.	18" X 18" W13-1	ATTACH BELOW 113
	36" X 12" W1-8A	TWO "U" POST PER SIGN
ONLY	30" X 36" R3-5R	ONE "U" POST PER SIGN

BIKE LANE DETAILS

Normal white line — 1.8 m (5 ft) (optional) — 1.8 m (5 ft) — 1.8 m (5 ft) — Directional arrow — Symbols — Word Legends (optional) — LANE — BIKE — □ = 100 mm x 100 mm (4 in x 4 in)

YIELD LINE DETAILS

75 to 300 mm (3 to 12 in) — base 300 mm (12 in) — height 450 mm (18 in) — (a) Minimum Dimensions

75 to 300 mm (3 to 12 in) — base 600 mm (24 in) — height 900 mm (36 in) — 3.7 m (12 ft) — Direction of travel — (b) Maximum Dimensions

Notes:
Triangle height is equal to 1.5 times the base dimension.

Yield lines may be smaller than suggested when installed on much narrower, slow-speed facilities such as shared-use paths.

36" X 24"

REV.NO.	DESCRIPTIONS	DATE
	REVISIONS	

SEAL

SEAL 022574 ENGINEER NORTH CAROLINA 10/03/2014

McKIM&CREED
243 North Front Street
Wilmington, North Carolina 28401
Phone: (910)343-1048 , Fax: (910)251-8282
License: F-1222
www.mckimcreed.com

Newland® COMMUNITIES

NORTH AMERICA SCOTSH HOUSE, LLC

RIVER ROAD

ROADWAY DETAILS

DATE:	SEPTEMBER 2014
MCE PROJ. #	2735-0007
DRAWN	
DESIGNED	
CHECKED	RMC
PROJ. MGR.	RMC

SCALE: HORIZONTAL: 1"=40' VERTICAL: N/A

MAC FILE NUMBER: CP-109

DRAWING NUMBER: PM-9

STATUS: FINAL DESIGN PLANS — REVISION

S:\2735\0007\90-Drawings\CP109-027350007.dwg, 10/3/2014 12:28:53 PM, nburretta, ANSI D (22.00 x 34.00 Inches), 1:1

STATE OF NORTH CAROLINA DEPT. OF TRANSPORTATION DIVISION OF HIGHWAYS RALEIGH, N.C.

1-12

ENGLISH STANDARD DRAWING FOR **RAISED PAVEMENT MARKERS** INSTALLATION SPACING

SHEET 1 OF 3 **1250.01**

GENERAL NOTES:

1- MARKERS ARE GENERALLY NOT REQUIRED ALONG EDGE LINES EXCEPT IF DESIGNATED IN THE PLANS OR DIRECTED BY THE ENGINEER. WHEN THEY ARE REQUIRED, SPACE THEM ON 20 FT. CENTERS, AND OFFSET 2 INCHES FROM THE EDGE LINE ON THE TRAFFIC SIDE.

2- PLACE CRYSTAL/RED MARKERS AT INTERSECTIONS AND INTERCHANGES WHERE WRONG-WAY MOVEMENTS ARE POSSIBLE. POSITION THE RED SIDE OF THE MARKER TO FACE "WRONG-WAY" TRAFFIC. WHEN USED, PLACE CRYSTAL/RED MARKERS ALONG THE ENTIRE LENGTH OF THE PROJECT.

3- DO NOT PLACE PAVEMENT MARKERS CLOSER THAN 3 INCHES TO A PAVEMENT CONSTRUCTION JOINT (AS FEASIBLE), EXCEPT WHEN PLACED BETWEEN DOUBLE YELLOW CENTER LINES, AND ALONG YELLOW SKIP LINES ON TWO-LANE, TWO-WAY ROADWAYS WHERE PASSING IS ALLOWED IN BOTH DIRECTIONS.

4- DO NOT PLACE PAVEMENT MARKERS DIRECTLY ON PAVEMENT MARKING LINES.

5- PLACE PAVEMENT MARKERS USED IN CONJUNCTION WITH DOUBLE YELLOW CENTER LINES MID-WAY BETWEEN THE LINES. PROVIDE A GAP BETWEEN THE LINES AND THE MARKER TO REDUCE OVERSPRAYING THE MARKER DURING REPAINTING OPERATIONS.

6- MARKERS ARE NOT REQUIRED ALONG MINI-SKIP LINES IN TAPERS.

PAVEMENT MARKER SPACING CHART

TYPE OF PAVEMENT MARKING	TYPICAL SPACING (FT)
SKIP LINES AND CENTER LINES ALONG THRU LANES-	
ALONG TANGENT SECTIONS AND HORIZONTAL CURVES LESS THAN 6°	80
HORIZONTAL CURVES ≥ 6°	40
TURN LANES-	
MINI-SKIP LINES	24
SKIP LINES	40
SOLID LINES	20
CENTER LINES	40
MINI-SKIP LINES AT LANE DROP APPROACHES	24
TWO-WAY RAMP CENTER LINES	40
GORE LINES	20
PAINTED ISLANDS-	
WHITE	20
YELLOW	40
RAISED MEDIAN ISLANDS	40
WRONG WAY RAMP ARROW	5
TAPERS	40
NARROW BRIDGES-	
EDGE LINE	20
CENTER LINE	40
ONE LANE BRIDGES-	
EDGE LINE	20
WORK ZONE APPLICATIONS	
2-LANE, 2-WAY ON-SITE DIVERSION	20 FT. FOR CENTER LINE
ALL OTHER DIVERSIONS	½ NORMAL SPACING

STATE OF NORTH CAROLINA DEPT. OF TRANSPORTATION DIVISION OF HIGHWAYS RALEIGH, N.C.

1-12

ENGLISH STANDARD DRAWING FOR **RAISED PAVEMENT MARKERS** INSTALLATION SPACING

SHEET 1 OF 3 **1250.01**

AUXILIARY TURN LANES

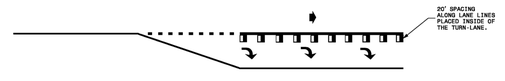

YELLOW PAINTED ISLANDS

WHITE PAINTED ISLANDS

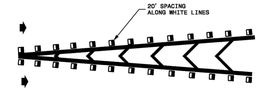

LEGEND

- DIRECTION OF TRAFFIC FLOW
- CRYSTAL/RED PAVEMENT MARKER
- YELLOW/YELLOW PAVEMENT MARKER
- PAVEMENT MARKING SYMBOL

STATE OF NORTH CAROLINA DEPT. OF TRANSPORTATION DIVISION OF HIGHWAYS RALEIGH, N.C.

1-12

ENGLISH STANDARD DRAWING FOR **RAISED PAVEMENT MARKERS** INSTALLATION SPACING

SHEET 3 OF 3 **1250.01**

STATE OF NORTH CAROLINA DEPT. OF TRANSPORTATION DIVISION OF HIGHWAYS RALEIGH, N.C.

1-12

ENGLISH STANDARD DRAWING FOR **RAISED PAVEMENT MARKERS** PERMANENT AND TEMPORARY

SHEET 1 OF 1 **1251.01**

TYPICAL PAVEMENT MARKER

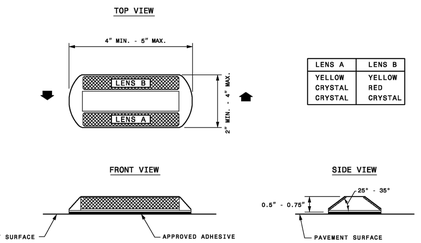

LENS A	LENS B
YELLOW	YELLOW
CRYSTAL	RED
CRYSTAL	CRYSTAL

GENERAL NOTES:

1- USE A MINIMUM OF 2 SQUARE INCHES FOR THE AREA OF EACH REFLECTIVE LENS.

2- FOR A COMPLETE LISTING OF PAVEMENT MARKERS AND ADHESIVES ACCEPTABLE FOR USE IN NORTH CAROLINA CONTACT THE NCDOT SIGNING AND DELINEATION UNIT.

LEGEND

- DIRECTION OF TRAFFIC FLOW

STATE OF NORTH CAROLINA DEPT. OF TRANSPORTATION DIVISION OF HIGHWAYS RALEIGH, N.C.

1-12

ENGLISH STANDARD DRAWING FOR **RAISED PAVEMENT MARKERS** PERMANENT AND TEMPORARY

SHEET 1 OF 1 **1251.01**

STATE OF NORTH CAROLINA DEPT. OF TRANSPORTATION DIVISION OF HIGHWAYS RALEIGH, N.C.

1-12

ENGLISH STANDARD DRAWING FOR **PAVEMENT MARKINGS** SYMBOLS AND WORD MESSAGES

SHEET 1 OF 7 **1205.08**

STRAIGHT ARROW

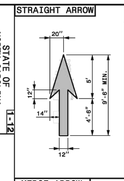

RIGHT OR LEFT TURN ARROW

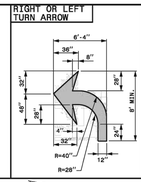

COMBINATION STRAIGHT AND LEFT OR RIGHT TURN ARROW

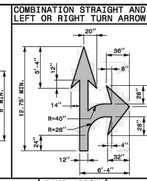

COMBINATION LEFT AND RIGHT TURN ARROW

SAME DIMENSIONS APPLY AS FOR THE LEFT/RIGHT TURN ARROW

COMBINATION LEFT AND STRAIGHT AND RIGHT TURN ARROW

SAME DIMENSIONS APPLY AS FOR THE COMBINATION STRAIGHT AND LEFT/RIGHT TURN ARROW

MERGE ARROW

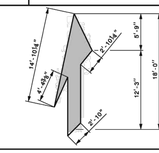

RAMP ARROW

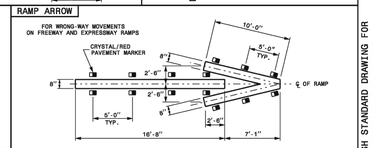

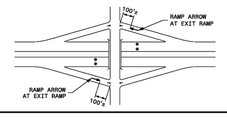

GENERAL NOTES:

1- USE THE COLOR WHITE FOR ALL PAVEMENT MARKING SYMBOLS.

2- DO NOT LOCATE PAVEMENT MARKING SYMBOLS AS TO ENCROACH INTO INTERSECTION AREAS.

3- DO NOT PLACE PAVEMENT MARKING SYMBOLS ACROSS TRANSVERSE EXPANSION JOINTS ON PORTLAND CEMENT CONCRETE PAVEMENTS, UNLESS APPROVED BY THE ENGINEER.

4- CONFORM ALL SYMBOLS TO THE FHWA "STANDARD ALPHABETS FOR HIGHWAY SIGNS AND PAVEMENT MARKINGS". (REFER TO SHEETS 5 THRU 8). SYMBOL DIMENSIONS CAN VARY AMONG MANUFACTURERS, THEREFORE SLIGHT VARIANCES ARE ACCEPTABLE. HOWEVER, ALL SYMBOLS ARE REQUIRED TO BE APPROVED BY THE DEPARTMENT.

STATE OF NORTH CAROLINA DEPT. OF TRANSPORTATION DIVISION OF HIGHWAYS RALEIGH, N.C.

1-12

ENGLISH STANDARD DRAWING FOR **PAVEMENT MARKINGS** SYMBOLS AND WORD MESSAGES

SHEET 1 OF 8 **1205.08**

STATE OF NORTH CAROLINA DEPT. OF TRANSPORTATION DIVISION OF HIGHWAYS RALEIGH, N.C.

1-12

ENGLISH STANDARD DRAWING FOR **MOUNTING OF TYPE 'D', 'E' AND 'F' SIGNS ON 'U' CHANNEL POSTS**

SHEET 1 OF 2 **904.50**

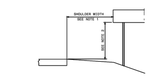

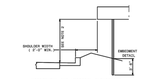

HORIZONTAL AND VERTICAL CLEARANCES

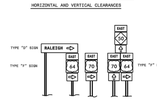

TYPICAL SIGN SHAPES AND COMBINATIONS

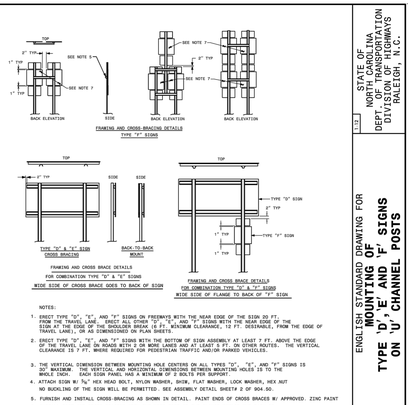

NOTES:

1. ERECT TYPE "D", "E", AND "F" SIGNS ON FREEWAYS WITH THE REAR EDGE OF THE SIGN 20 FT. FROM THE NEAREST EDGE OF THE TRAVEL LANE. ERECT TYPE "D" AND "E" SIGNS WITH THE REAR EDGE OF THE SIGN AT THE EDGE OF THE SHOULDER WHICH IS 8 FT. WINDROW CLEARANCE, 10 FT. OVERHAUL, FROM THE EDGE OF TRAVEL LANE, OR AS DIMENSIONED ON PLAN SHEETS.

2. ERECT TYPE "D", "E", AND "F" SIGNS WITH THE BOTTOM OF SIGN ASSEMBLY AT LEAST 7 FT. ABOVE THE EDGE OF THE TRAVEL LANE ON ROADS WITH 2 OR MORE LANES AND AT LEAST 5 FT. ON OTHER ROUTES. THE VERTICAL CLEARANCE IS 7 FT. WHERE REQUIRED FOR PEDESTRIAN TRAFFIC AND/OR PARKED VEHICLES.

3. THE VERTICAL DIMENSION BETWEEN MOUNTING HOLE CENTERS ON ALL TYPES "D", "E", AND "F" SIGNS IS 30" MAXIMUM. THE VERTICAL AND HORIZONTAL DIMENSIONS BETWEEN MOUNTING HOLES IS TO THE WHOLE INCH. EACH SIGN PANEL HAS A MINIMUM OF 2 BOLTS PER SUPPORT.

4. ATTACH SIGN W/ ⅜" HEX HEAD BOLT, NYLON WASHER, SHIM, FLAT WASHER, LOCK WASHER, HEX NUT

NO BUCKLING OF THE SIGN WILL BE PERMITTED. SEE ASSEMBLY DETAIL SHEETS 2 OF 904.50.

5. FURNISH AND INSTALL CROSS-BRACING AS SHOWN IN DETAIL. PAINT ENDS OF CROSS BRACES W/ APPROVED. ZINC PAINT

6. INSTALL POST AND CROSS-BRACING WITH THE WIDE SIDE OF THE FLANGE TOWARD THE BACK OF SIGN(S) FOR COMBINATION TYPE "D" AND "F" SIGNS.

7. THE SHIELD HEIGHTS IN THESE ASSEMBLIES CAN NOT BE LARGER THAN 24".

STATE OF NORTH CAROLINA DEPT. OF TRANSPORTATION DIVISION OF HIGHWAYS RALEIGH, N.C.

1-12

ENGLISH STANDARD DRAWING FOR **MOUNTING OF TYPE 'D', 'E' AND 'F' SIGNS ON 'U' CHANNEL POSTS**

SHEET 1 OF 2 **904.50**

STATE OF NORTH CAROLINA DEPT. OF TRANSPORTATION DIVISION OF HIGHWAYS RALEIGH, N.C.

1-12

ENGLISH STANDARD DRAWING FOR **CURB RAMP** PROPOSED CURB AND GUTTER

SHEET 1 OF 3 **848.05**

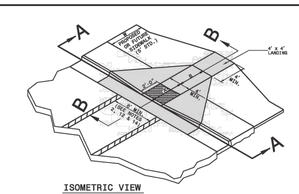

ISOMETRIC VIEW

PAY LIMITS FOR CURB RAMP

NOTES:
1. DETECTABLE WARNING DOMES WILL COVER 3'-0" LENGTH AND FULL WIDTH OF THE RAMP FLOOR AS SHOWN ON THE DETAILS.
2. DETECTABLE WARNING DOMES WILL CONTRAST VISIBILITY WITH ADJOINING SURFACE, EITHER LIGHT-ON-DARK, OR DARK-ON-LIGHT SEQUENCE CONFORMS THE ENTIRE RAMP.

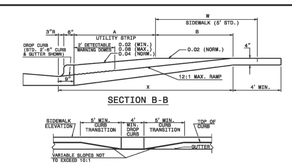

SECTION B-B

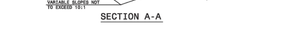

SECTION A-A

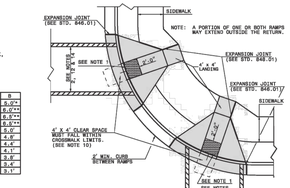

PLAN VIEW

DUAL RAMPS
(SEE NOTE 9)
(4' MIN. FLOOR WIDTH)

RAMP WIDTH AREA IS VARIABLE

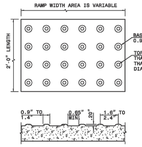

DETECTABLE WARNING DOMES

B	A	W=A+B*	X	S
5' 10.0"	9.9"	6.9"	5.0"*
6' 0.0"	8.9"	8.9"	6.0"**
6' 10.0"	7.9"	7.9"	7.0"**
6' 0.0"	8.9"	7.9"	8.5"**
8' 0.0"	7.9"	7.9"	9.0"
9' 0.0"	8.9"	8.1"	4.9"
9' 10.0"	7.9"	8.9"	3.4"
9' 0.0"	9.9"	8.4"	4.1"
9' 10.0"	8.9"	8.9"	3.5"
10' 0.0"	9.9"	8.7"	3.4"
10' 10.0"	8.9"	8.9"	3.1"

B = X-(A+9")
S = DISTANCE FROM FRONT EDGE OF SIDEWALK TO BACK POINT OF 12:1 (8.33%) SLOPE.
* BACK OF SIDEWALK DROP REQUIRED FOR ALL SIDEWALK SLOPES.
** BACK OF SIDEWALK DROP REQUIRED FOR SIDEWALK SLOPES 0.5%.

STATE OF NORTH CAROLINA DEPT. OF TRANSPORTATION DIVISION OF HIGHWAYS RALEIGH, N.C.

1-12

ENGLISH STANDARD DRAWING FOR **CURB RAMP** PROPOSED CURB AND GUTTER

SHEET 1 OF 3 **848.05**

STATE OF NORTH CAROLINA DEPT. OF TRANSPORTATION DIVISION OF HIGHWAYS RALEIGH, N.C.

1-12

ENGLISH STANDARD DRAWING FOR **MOUNTING OF TYPE 'D', 'E' AND 'F' SIGNS ON 'U' CHANNEL POSTS**

SHEET 2 OF 2 **904.50**

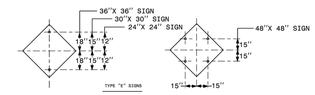

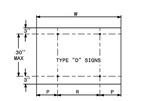

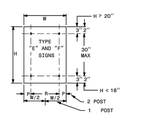

	NO. SUPPORTS		
	2	3*	4
2"	.102W	.145W	.107W
6	.550W	.555W	.282W

UNITS ON ATTACHED SHEET
*MINIMUM 4 FT. BETWEEN CHANNEL POSTS

HOLE PUNCHING DETAIL

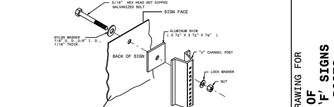

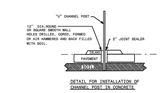

DETAIL FOR INSTALLATION OF CHANNEL POST IN CONCRETE

STATE OF NORTH CAROLINA DEPT. OF TRANSPORTATION DIVISION OF HIGHWAYS RALEIGH, N.C.

1-12

ENGLISH STANDARD DRAWING FOR **MOUNTING OF TYPE 'D', 'E' AND 'F' SIGNS ON 'U' CHANNEL POSTS**

SHEET 2 OF 2 **904.50**

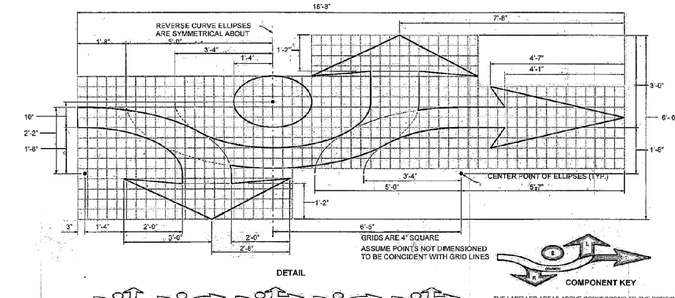

REV.NO.	DESCRIPTIONS	DATE
	REVISIONS	

SEAL

SEAL 022574 ENGINEER RICHARD MCALLISTER COLLIER 10/03/2014

McKIM&CREED
243 North Front Street
Wilmington, North Carolina 28401
Phone: (910)343-1048 , Fax: (910)251-8282
License: F-1222
www.mckimcreed.com

Newland® COMMUNITIES

NASH NORTH AMERICA SCHOOLS HOUSE, LLC

RIVER ROAD

ROADWAY DETAILS

DATE:	SEPTEMBER 2014
MCE PROJ. #	2735-0007
DRAWN	
DESIGNED	
CHECKED	RMC
PROJ. MGR.	RMC

SCALE
HORIZONTAL: 1"=40'
VERTICAL: N/A

M&C FILE NUMBER CP-110

DRAWING NUMBER PM-10

STATUS: FINAL DESIGN PLANS

REVISION

S:\2735\0007\80-Drawings\CP110-027350007.dwg, 10/3/2014 12:29:09 PM, nilauretta,
ANSI D (22.00 x 34.00 Inches), 1:1