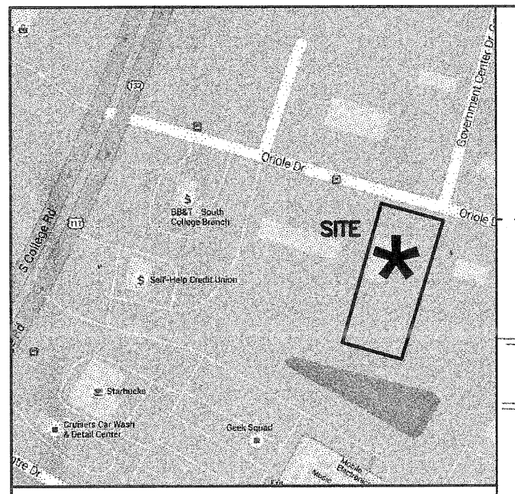

VICINITY MAP (N.T.S)

GOVERNMENT CENTER DR.

ADJOINER ACROSS STREET
COLAP INTERPRISES
D.B. 5892, PG. 1258
ZONED: RB-REGIONAL BUSINESS
USE: RETAIL AUTO

ASPHALT PAVEMENT

ORIOLE DRIVE
60' PUBLIC R/W

RBS
S70°59'00"E
130.00' (TOTAL)
100.00'
30.04'
EIP
RBS
EIPP

12" DOGWOOD
CREPE MYRTLES (5)
JAPANESE MAPLE
20' Building Setback Line
HC
6
CONCRETE PAD
PORCH
OFFICE
COVERED CONCRETE PORCH
2
GARAGE

HEDGE ROW ALONG PROPERTY LINE

LOT 4
COLLEGE ACRES SUBDIVISION
SECTION 1-A
M.B. 8, PG. 79

ZONED: R-15
(RESIDENTIAL)

N/F
JEFFREY W. McDOWELL
D.B. 4023, PG. 841
USE: RESIDENTIAL

N/F
ST. JOHN'S LODGE
NO. 1 A.F. & A.M.
D.B. 1108, PG. 549

ZONED: O & I-1
(FRATERNAL ORGNIZATION)
USE: FRATERNAL LODGE
RECREATIONAL - PRIVATE

LOT 2
COLLEGE ACRES SUBDIVISION
SECTION 1-A
M.B. 8, PG. 79

N/F
ORIOLE PARTNERS, LLC
D.B. 5090, PG. 363

S19°01'00"W 300.00'

CLOSED PUBLIC RIGHT OF WAY
D.B. 5778, PG. 2721

14" MAPLE
14" MAPLE
14" MAPLE
TWIN 24" MAPLE
24" MAPLE
12" MAPLE
24" MAPLE
20" MAPLE
24" MAPLE
20" MAPLE
N19°02'39"E 299.99'
24" MAPLE
12" SWEET GUM
12" MAPLE
12" MAPLE
10' Building Setback Line
10' Building Setback Line
24" MAPLE
LOT 2A
RAIFORD G. TRASK SUBDIVISION
D.B. 896, PG. 483
N/F
ORIOLE PARTNERS, LLC
D.B. 5090, PG. 363
12"MAPLE
26"MAPLE
12"MAPLE
26"MAPLE
26"PINE
12" SWEET GUM
26" SWEET GUM
20" SWEET GUM
12" MAPLE
20' Building Setback Line
12" SWEET GUM
12" SWEET GUM
14"SWEET GUM
12" SWEET GUM
14"SWEET GUM
12" SWEET GUM
12"PINE
22" PINE
EIR
N70°58'49"W 130.14'
RBS
EIPP

AREA OF PREVIOUSLY DETERMINED NON-JURISDICTIONAL ISOLATED WETLANDS. (0.19± AC)

30'
30'

LOT 4A
RAIFORD G. TRASK SUBDIVISION
D.B. 896, PG. 483

ZONED: R-15
(RESIDENTIAL)

N/F
JEFFREY W. McDOWELL
D.B. 4023, PG. 841
USE: RESIDENTIAL

N/F
PHD@COLLEGE, LLC
D.B. 5807, PG. 2409

ZONED: RB
(REGIONAL BUSINESS)
USE: NEIGHBOHOOD - RETAIL

LEGEND

	PROPERTY LINE
	DISTURBED AREA LIMITS
39	PROPOSED CONTOUR
TSF TSF	TEMPORARY SILT FENCE
SD SD	PROPOSED STORMDRAIN PIPE
W W	EXISTING WATERLINE
SS SS	EXISTING SANITARY SEWER
X 29.00	PROPOSED FINISH GRADE SPOT ELEVATION
	FLARED END SECTION WITH RIP-RAP ENERGY DISSIPATOR
	JUNCTION BOX WITH INLET PROTECTION (JB)
TP TP	TREE PROTECTION FENCING
	PROPOSED GRAVEL
	PROPOSED CONCRETE
	EXISTING FOUNDATION PLANTINGS

ORIOLE SITE DATA TABLE

USE:	OFFICE
SITE ADDRESS:	4718 ORIOLE DRIVE
PARCEL ID#:	R04920-003-004-000
MAP ID#:	3147015.19,8328.000
PARCEL AREA:	0.90 AC (39,204 SF)
ZONING:	O&I-1 OFFICE AND INSTITUTIONAL
CAMA LAND USE:	URBAN
BUILDING SETBACKS: (REQUIRED)	FRONT SETBACK: 20' INTERIOR SIDE SETBACK: 10' REAR SETBACKS: 20'
BUILDING SETBACKS EXISTING:	SEE LAYOUT PLAN
EXISTING BUILDING HEIGHT:	10'± TO EAVES
EXISTING BUILDING AREA:	1,812 SF OFFICE/891 SF GARAGE
BUILDING LOT COVERAGE:	6.89%
EXISTING BUILDING STORIES:	1
BUILDING CONSTRUCTION TYPE:	XX

BUFFER YARD (EAST SIDE): 20' REQUIRED/10' PROPOSED. REDUCTION IN BUFFER YARD REQUESTED FOR SITE CONSTRAINTS ALONG ADJACENT PROPERTIES. 10' BUFFER TO BE COMBINED WITH 8' OPAQUE FENCE.

PROPOSED PARKING REQUIREMENT

PARKING REQ'D: OFFICE	MAX: 1/200 SF MIN: 1/300 SF
TOTAL PARKING REQUIRED:	9 MAX., 6 MIN.
PARKING PROPOSED	8 TOTAL
HC PARKING REQUIRED	1
HC PARKING PROVIDED	1

BICYCLE PARKING: NOT REQUIRED FOR DEVELOPMENT REQUIRING LESS THAN 25 REGULAR PARKING SPACES.

IMPERVIOUS AREA:

EXISTING IMPERVIOUS AREA:

BUILDING:	1,812 SF
COVERED PORCH:	634 SF
GARAGE:	891 SF
CONCRETE:	800 SF
TOTAL:	4,137 SF
% SITE IMPERVIOUS AREA:	10.55%

NEW IMPERVIOUS AREA ADDED:

GRAVEL:	6,660 SF
CONCRETE:	1,311 SF
TOTAL ADDED:	7,971 SF

PROPOSED IMPERVIOUS AREA:

BUILDING:	1,812 SF
COVERED PORCH:	634 SF
GARAGE:	891 SF
CONCRETE:	2,111 SF
GRAVEL:	6,660 SF
TOTAL:	12,108 SF
% SITE IMPERVIOUS AREA:	30.88%

INTERIOR LANDSCAPING O&I-1: 30% CANOPY COVER OF INTERIOR AREA OF PARKING FACILITY BASED ON AMOUNT OF PARKING AREA IMPERVIOUS SURFACE (6,485 SF).

STREETYARD LANDSCAPING: 18 MULTIPLIER
(130)-(24)X(18) = 1,908 SF REQUIRED 1,908 SF PROPOSED

FOUNDATION PLANTINGS: 12% FACE OF BUILDING X LENGTH

15 TREES PER ACRE DISTURBED: DISTURBED AREA=0.35 AC = 5 TREES

NO EXISTING REQULATED OR SIGNIFICANT TREES ON SITE SHALL BE REMOVED.

SOLID WASTE DISPOSAL IS HANDLED BY ON SITE DUMPSTER.

PUBLIC WATER AND SEWER

WATER - CURRENT USE	350 GPD
WATER - PROPOSED USE	250 GPD
SEWER - CURRENT USE	350 GPD
SEWER - PROPOSED USE	250 GPD

For each open utility cut of City streets, a $325 permit shall be required from the City prior to occupancy and/or project acceptance.

CITY OF WILMINGTON NORTH CAROLINA
Public Services • Engineering Division
STORMWATER MANAGEMENT PLAN
Date:_____ Permit #_____
Signed: _____

Approved Construction Plan

	Name	Date
Planning		
Traffic		
Fire		

NCDENR PWSS WATER PERMIT #: _____
WATER CAPACITY: _____GPD
DWQ SEWER PERMIT #: _____
SEWER CAPACITY: _____GPD
SEWER SHED # AND PLANT: _____
SEWER TO FLOW THROUGH NEI: YES or NO (CIRCLE ONE)

SCALE: 1" = 20'
0 20 40 60

SYMBOL	DATE	DESCRIPTION	BY
		REVISIONS	

© 2016 NORRIS & TUNSTALL

OVERALL SITE PLAN
ORIOLE PARTNERS OFFICE
4717 ORIOLE DRIVE
WILMINGTON, N. C. 28403

OWNER/DEVELOPER
ORIOLE PARTNERS OFFICE
DON HARLEY, MEMBER/MANAGER
ORIOLE PARTNERS, LLC
1430 COMMONWEALTH DR., SUITE 102
WILMINGTON, NC 28403
910-350-1200

NORRIS & TUNSTALL
CONSULTING ENGINEERS, P.C.
902 MARKET STREET 1429 ASH-LITTLE RIVER RD. NW
WILMINGTON, NC 28401 ASH, NC 28420
PHONE (910) 343-9653 PHONE (910) 287-5900
licence #C-3641

16012

DES.	JST
CKD.	JPN
DRWN.	NKS
DATE	2/10/16

NORTH CAROLINA PROFESSIONAL ENGINEER SEAL 035641 JOHN S. TUNSTALL
PRELIMINARY

C1

C:\Projects\2016\16012 Oriole Partners Office\16012 Plans\dwg\16012.master.dwg, 2/10/2016 7:49:32 AM

VICINITY MAP (N.T.S)

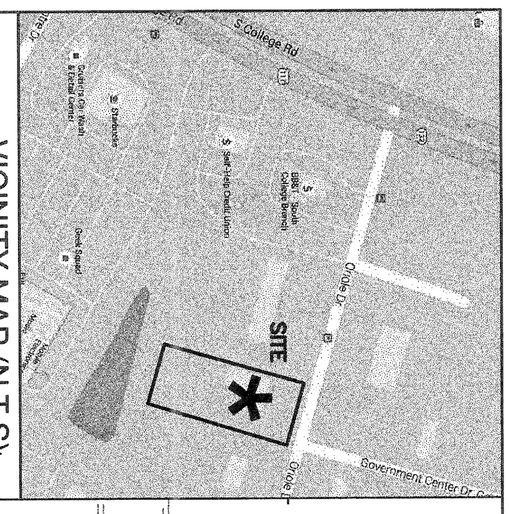

N70°58'49"W 228.99' (TIE)

MAG-NAIL

ADJOINER ACROSS STREET
COLAP INTERPRISES
D.B. 3892, PG. 1238
ZONED: RB-REGIONAL BUSINESS
USE: RETAIL AUTO

N/F
ST. JOHN'S LODGE
NO. 1 A.F. & A.M.
D.B. 1108, PG. 549

ZONED: O & I-1
(FRATERNAL ORGNIZATION)
USE: FRATERNAL LODGE
RECREATIONAL – PRIVATE

N80°19'27"W 345.55' (TIE)

N/F
PHDC@COLLEGE, LLC
D.B. 5807, PG. 2409

ZONED: RB
(REGIONAL BUSINESS)
USE: NEIGHBORHOOD – RETAIL

N/F
ORIOLE PARTNERS, LLC
D.B. 5090, PG. 363

LOT 2A
RAIFORD G. TRASK SUBDIVISION
D.B. 896, PG. 483

N/F
ORIOLE PARTNERS, LLC
D.B. 5090, PG. 363

COLLEGE ACRES SUBDIVISION
SECTION 1-A
M.B. 8, PG. 79

LOT 4A
RAIFORD G. TRASK SUBDIVISION
D.B. 896, PG. 483

ZONED: R-15
(RESIDENTIAL)

N/F
JEFFREY W. McDOWELL
D.B. 4023, PG. 841
USE: RESIDENTIAL

LOT 4
COLLEGE ACRES SUBDIVISION
SECTION 1-A
M.B. 8, PG. 79

ZONED: R-15
(RESIDENTIAL)

N/F
JEFFREY W. McDOWELL
D.B. 4023, PG. 841
USE: RESIDENTIAL

N19°02'38"E 299.99'
S19°01'00"W 300.00'
S69°37'56"E 152.87' (TIE)
S71°15'00"E 29.90' (TIE)
N70°58'49"W 130.14'

10' Building Setback Line
20' Building Setback Line
149.6'

HEDGE ROW ALONG PROPERTY LINE
GRAVEL DRIVE
EXISTING DIRT DRIVE
EXISTING SWALE
EXIST. DRIVE TO BE CLOSED.
EXIST. WATER SERVICE
EXIST. FH
EXIST. SWALE
EXIST. SEWER SERVICE
SEWER GRINDER PUMP
EXIST. FOUNDATION PLANTINGS, TYP.
INSTALL NEW COW STANDARD DRIVE ENTRANCE.
INSTALL TEMPORARY GRAVEL CONSTRUCTION ENTRANCE.
12" FES WITH CLASS B RIP-RAP ENERGY DISSIPATER 10'LX10'WX12'D INV. OUT=39.25
RAISE EXIST. SSMH TOP TO GRADE.
JB TOP=GRADE INV.=39.44
ORIOLE DRIVE 60' PUBLIC R/W
8" WATER LINE
8" SEWER LINE
12" RCP
DROP INLET (2' x 2') RIM ELEVATION: 41.62
INVERT ELEVATION: 39.44
TOP OF SLOPE
TOE OF SLOPE
DISTURBED AREA LIMITS, TYP.
AREA OF PREVIOUSLY DETERMINED NON-JURISDICTIONAL ISOLATED WETLANDS. (0.19± AC)
CLOSED PU RIGHT OF WAY D.B. 5170, PG. 2721
DAYLIGHT SWALE
SWALE 3:1
GOVERNMENT CENTER DR.

GARAGE
OFFICE
PORCH
CONCRETE PAD
COVERED CONCRETE PORCH
A/C PAD
HC
TWIN 24" MAPLE
20' Building Setback Line
10' Building Setback Line
CONCRETE PAD
216 SF
1216 SF

12" PINE
28" PINE
26" MAPLE
24" MAPLE
20" MAPLE
14" MAPLE
12" MAPLE
12" SWEET GUM
20" SWEET GUM
26" SWEET GUM
22" PINE

INSTALL TEMP. SILTFENCE. (TREE PROTECTION)

EIR
EIPP
RBS
TIE
SYD
CP
MB
SS
OHE
W

SCALE: 1" = 20'
0 20 40 60

SYMBOL	DATE	DESCRIPTION	BY
REVISIONS			

© 2016 NORRIS & TUNSTALL

For each open utility cut of City streets, a $325 permit shall be required from the City prior to occupancy and/or project acceptance.

CITY OF WILMINGTON NORTH CAROLINA
Public Services • Engineering Division
STORMWATER MANAGEMENT PLAN

Date:_____ Permit #_____
Signed:_____

Approved Construction Plan

Name	Date
Planning	
Traffic	
Fire	

NCDENR PWSS WATER PERMIT #:
WATER CAPACITY: _____ GPD
DWQ SEWER PERMIT #:
SEWER CAPACITY: _____ GPD
SEWER SHED # AND PLANT:
SEWER TO FLOW THROUGH NEI: YES or NO (CIRCLE ONE)

PRELIMINARY
NOT FOR CONSTRUCTION
NORTH CAROLINA PROFESSIONAL ENGINEER
J. S. TUNSTALL
1

C2

DES.	JST
CKD.	JPN
DRWN.	NKS
DATE	2/10/16

16012

NORRIS & TUNSTALL
CONSULTING ENGINEERS, P.C.
902 MARKET STREET
WILMINGTON, NC 28401
PHONE (910) 343-9653
1429 ASH-LITTLE RIVER RD. NW
ASH, NC 28420
PHONE (910) 287-5900
licence #C-3641

OWNER/DEVELOPER
ORIOLE PARTNERS OFFICE
DON HARLEY, MEMBER/MANAGER
ORIOLE PARTNERS, LLC
1430 COMMONWEALTH DR., SUITE 102
WILMINGTON, NC 28403
910-350-1200

GRADING, DRAINAGE AND EROSION CONTROL PLAN
ORIOLE PARTNERS OFFICE
4717 ORIOLE DRIVE
WILMINGTON, N. C. 28403

VICINITY MAP (N.T.S)

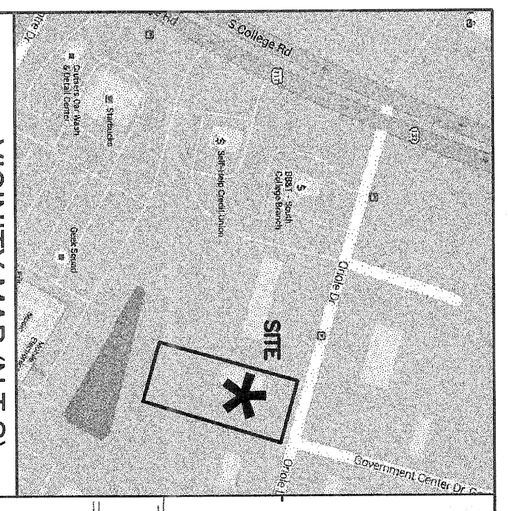

MAG-DATE

ADJOINER ACROSS STREET
COLAP INTERPRISES
D.B. 5892, PG. 1258
ZONED: RB-REGIONAL BUSINESS
USE: RETAIL AUTO

N/F
ST. JOHN'S LODGE
NO. 1 A.F. & A.M.
D.B. 1108, PG. 549

ZONED: O & I-1
(FRATERNAL ORGNIZATION)
USE: FRATERNAL LODGE
RECREATIONAL – PRIVATE

N/F
PHD@COLLEGE, LLC
D.B. 5807, PG. 2409

ZONED: RB
(REGIONAL BUSINESS)
USE: NEIGHBOHOOD – RETAIL

ORIOLE DRIVE
60' PUBLIC R/W

ASPHALT PAVEMENT

8" WATER LINE

GOVERNMENT CENTER DR.

CONCRETE PAVING FOR HC ACCESS.

STRIPE FOR HC ACCESS TO RAMP.

HC SIGN

WHEEL STOPS, TYP.

ADA RAMP

HEDGE ROW ALONG PROPERTY LINE

N19°02'38"E 299.99'

10' Building Setback Line

149.6'

20' Building Setback Line

GARAGE

OFFICE

PORCH

COVERED CONCRETE PORCH

CONCRETE PAD

SIGHT TRIANGLE

CREPE MYRTLES (4)

12" BOXWOOD

100.00'

S70°59'00"E 130.00' (TOTAL)

8" SEWER LINE

LOT 2
COLLEGE ACRES SUBDIVISION
SECTION 1-A
M.B. 8, PG. 79

N/F
ORIOLE PARTNERS, LLC
D.B. 5090, PG. 363

LOT 2A
RAIFORD G. TRASK SUBDIVISION
D.B. 896, PG. 483

N/F
ORIOLE PARTNERS, LLC
D.B. 5090, PG. 363

DUMPSTER SCREENING IN ACCORDANCE WITH COW STANDARDS. SEE LANDSCAPE PLAN.

12'x12' CONCRETE DUMPSTER PAD

STANDARD COW DRIVE ENTRANCE. SEE DETAIL.

CONCRETE DRIVE ENTRANCE.

EXIST. FOUNDATION PLANTINGS, TYP.

GRAVEL DRIVE AND PARKING

LANDSCAPE AREAS SHALL HAVE LANDSCAPE TIMBER BORDER. TYPICAL.

10' BUFFER. COMBINATION FENCE AND LANDSCAPING. SEE LANDSCAPE PLANS.

CLOSED PUBLIC RIGHT OF WAY
D.B. 5178, PG. 2721

S19°01'00"W 300.00'

AREA OF PREVIOUSLY DETERMINED NON-JURISDICTIONAL ISOLATED WETLANDS. (0.19± AC)

LOT 4A
RAIFORD G. TRASK SUBDIVISION
D.B. 896, PG. 483

ZONED: R-15
(RESIDENTIAL)

N/F
JEFFREY W. McDOWELL
D.B. 4023, PG. 841
USE: RESIDENTIAL

LOT 4
COLLEGE ACRES SUBDIVISION
SECTION 1-A
M.B. 8, PG. 79

ZONED: R-15
(RESIDENTIAL)

N/F
JEFFREY W. McDOWELL
D.B. 4023, PG. 841
USE: RESIDENTIAL

12" PINE, 26" PINE, 12" MAPLE, 26" MAPLE, 24" MAPLE, 20" MAPLE, 14" MAPLE, TWIN 24" MAPLE, 12" SWEET GUM, 14" SWEET GUM, 20" SWEET GUM, 26" SWEET GUM, 22" PINE

SCALE: 1" = 20'

0 20 40 60

For each open utility cut of City streets, a $325 permit shall be required from the City prior to occupancy and/or project acceptance.

CITY OF WILMINGTON NORTH CAROLINA
Public Services • Engineering Division
STORMWATER MANAGEMENT PLAN

Date:_____ Permit #_____

Signed:_____

Approved Construction Plan

Name Date

Planning_____

Traffic_____

Fire_____

NCDENR PWSS WATER PERMIT #:_____
WATER CAPACITY:_____ GPD
DWQ SEWER PERMIT #:_____
SEWER CAPACITY:_____ GPD
SEWER SHED # AND PLANT:_____
SEWER TO FLOW THROUGH NEI: YES or NO (CIRCLE ONE)

SYMBOL	DATE	DESCRIPTION	BY
		REVISIONS	

© 2016 NORRIS & TUNSTALL

NORRIS & TUNSTALL
CONSULTING ENGINEERS, P.C.
902 MARKET STREET
WILMINGTON, NC 28401
PHONE (910) 343-9653
1429 ASH-LITTLE RIVER RD. NW
ASH, NC 28420
PHONE (910) 287-5900
licence #C-3641

OWNER/DEVELOPER
ORIOLE PARTNERS OFFICE
DON HARLEY, MEMBER/MANAGER
ORIOLE PARTNERS, LLC
1430 COMMONWEALTH DR., SUITE 102
WILMINGTON, NC 28403
910-350-1200

LAYOUT PLAN

ORIOLE PARTNERS OFFICE
4717 ORIOLE DRIVE
WILMINGTON, N. C. 28403

PRELIMINARY NOT FOR CONSTRUCTION
NORTH CAROLINA PROFESSIONAL ENGINEER
J. TUNSTALL 037

DES.	JST
CKD.	JPN
DRWN.	NKS
DATE	2/10/16

16012

C3

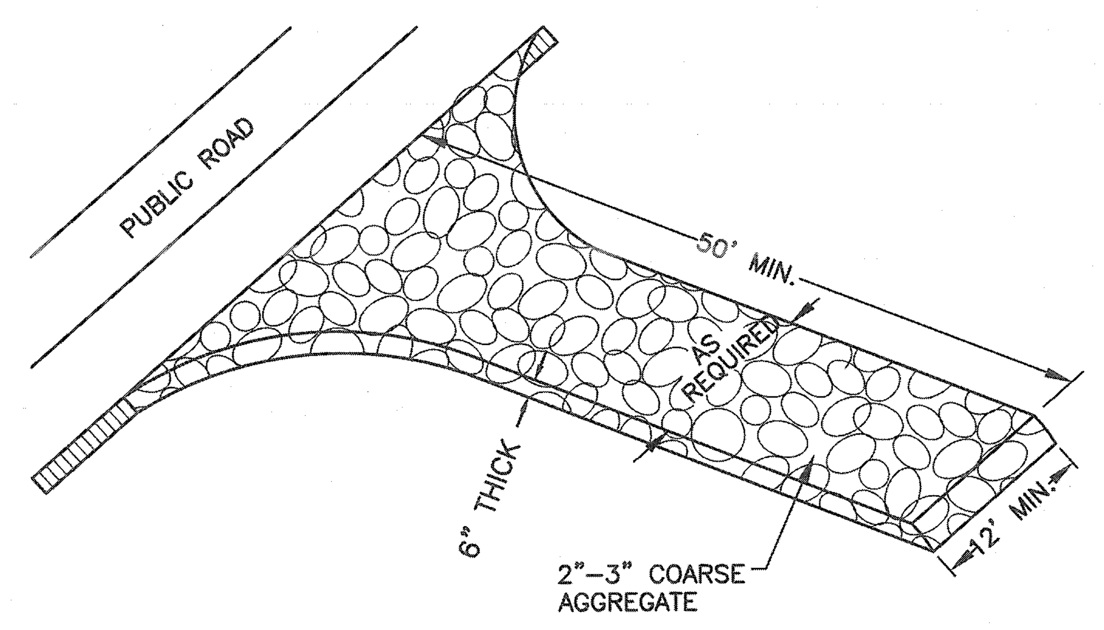

NOT TO SCALE

1 TEMPORARY GRAVELLED CONSTRUCTION ENTRANCE

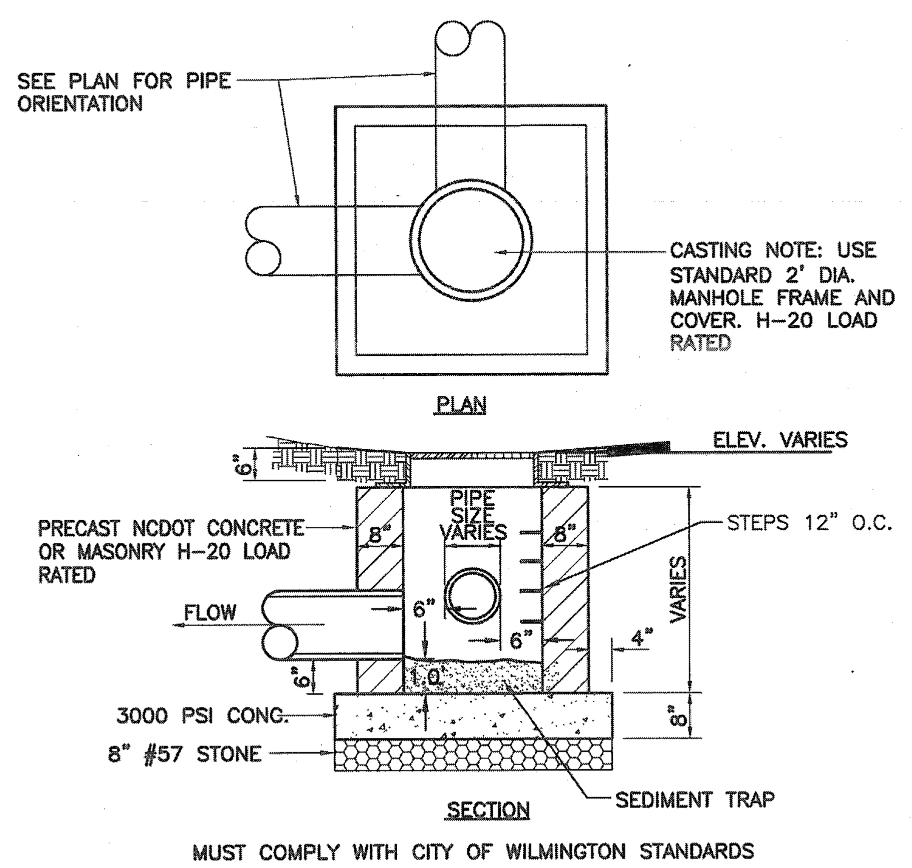

NOT TO SCALE

2 JUNCTION BOX DETAIL

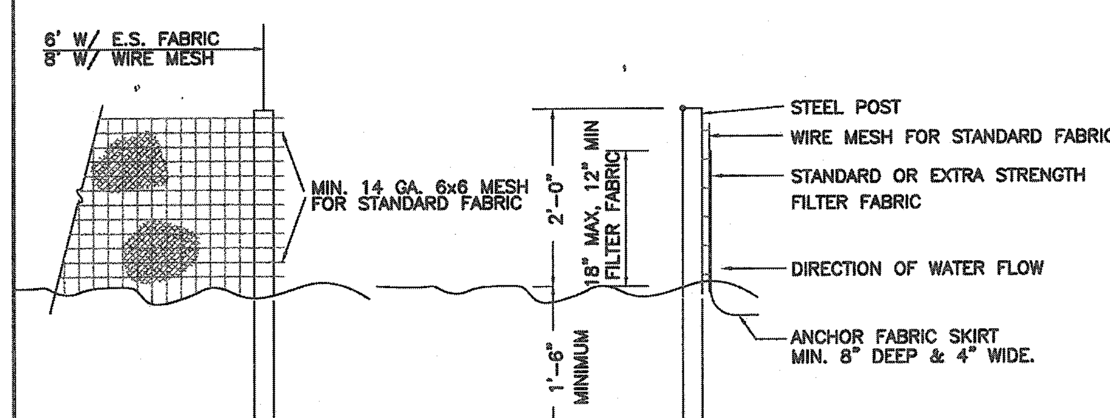

NOTES:

1. SYN. FENCE FABRIC SHALL BE MIN. OF 30" IN WIDTH WITH 30 LB/IN TENSILE STRENGTH FOR STANDARD FABRIC AND 50 LB/IN FOR EXTRA STRENGTH.
2. FABRIC SHALL BE CONTINUOUS LENGTH. IF JOINTS ARE NECESSARY, LAP FABRIC POST TO POST.
3. STEEL POST SHALL BE MIN 4' IN HEIGHT AND BE OF THE SELF-FASTENER STEEL ANGLE TYPE.

NOT TO SCALE

3 TEMPORARY SILT FENCE

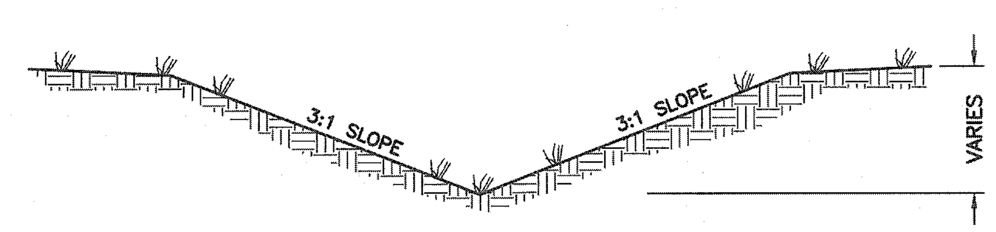

4 TYPICAL GRASS SWALE

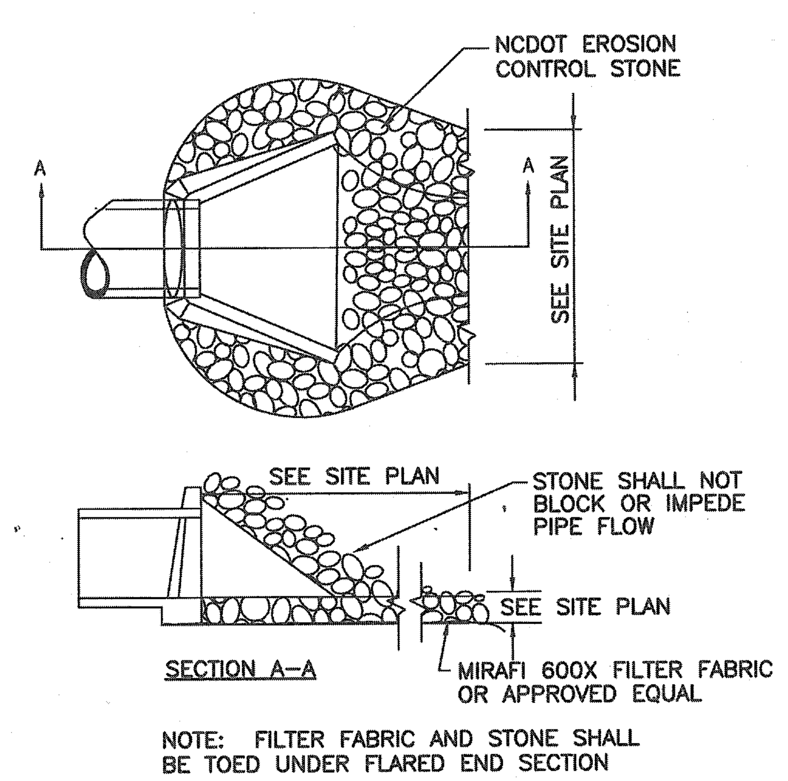

NOTE: FILTER FABRIC AND STONE SHALL BE TOED UNDER FLARED END SECTION

NOT TO SCALE

6 ENERGY DISSIPATOR

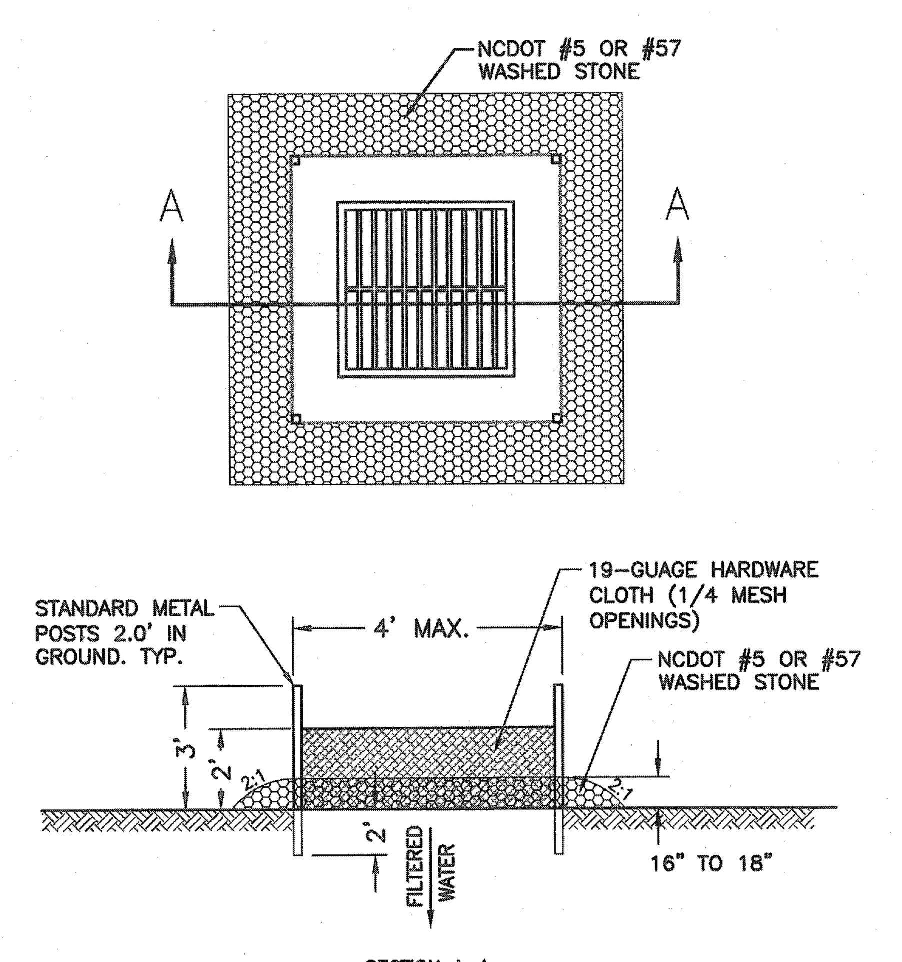

CONSTRUCTION SEQUENCE:
1. UNIFORMLY GRADE A SHALLOW DEPRESSION APPROACHING THE INLET.
2. DRIVE 5' STEEL POST 2' INTO THE GROUND SURROUNDING THE INLET. SPACE POST EVENLY AROUND THE PERIMETER OF THE INLET, A MAXIMUM OF 4' APART.
3. SURROUND THE POST WITH WIRE MESH HARDWARE CLOTH. SECURE THE WIRE MESH TO THE STEEL POST AT THE TOP, MIDDLE AND BOTTOM. PLACING A 2' FLAP OF THE WIRE MESH UNDER THE GRAVEL FOR ANCHORING IS RECOMMENDED.
4. PLACE CLEAN GRAVEL (NCDOT #5 OR #57 STONE) ON A 2:1 SLOPE WITH A HEIGHT OF 16" AROUND THE WIRE, AND SMOOTH TO AN EVEN GRADE.
5. ONCE THE CONTRIBUTING DRAINAGE AREA HAS BEEN STABILIZED, REMOVE ACCUMULATED SEDIMENT, AND ESTABLISH FINAL GRADING ELEVATIONS.
6. COMPACT THE AREA PROPERLY AND STABILIZE IT WITH GROUNDCOVER.

MAINTENANCE:
INSPECT INLETS AT LEAST WEEKLY AND AFTER EACH SIGNIFICANT (1/2 INCH OR GREATER) RAINFALL EVENT. CLEAR THE MESH WIRE OF ANY DEBRIS OR OTHER OBJECTS TO PROVIDE ADEQUATE FLOW FOR SUBSEQUENT RAINS. TAKE CARE NOT TO DAMAGE OR UNDERCUT THE WIRE MESH DURING SEDIMENT REMOVAL. REMOVE SEDIMENT WHEN ACCUMULATION REACHES HALF THE DEPTH OF ROCK. REPLACE STONE WHEN IT NO LONGER DRAINS AS DESIGNED.

NOT TO SCALE

7 HARDWARE CLOTH AND GRAVEL INLET PROTECTION

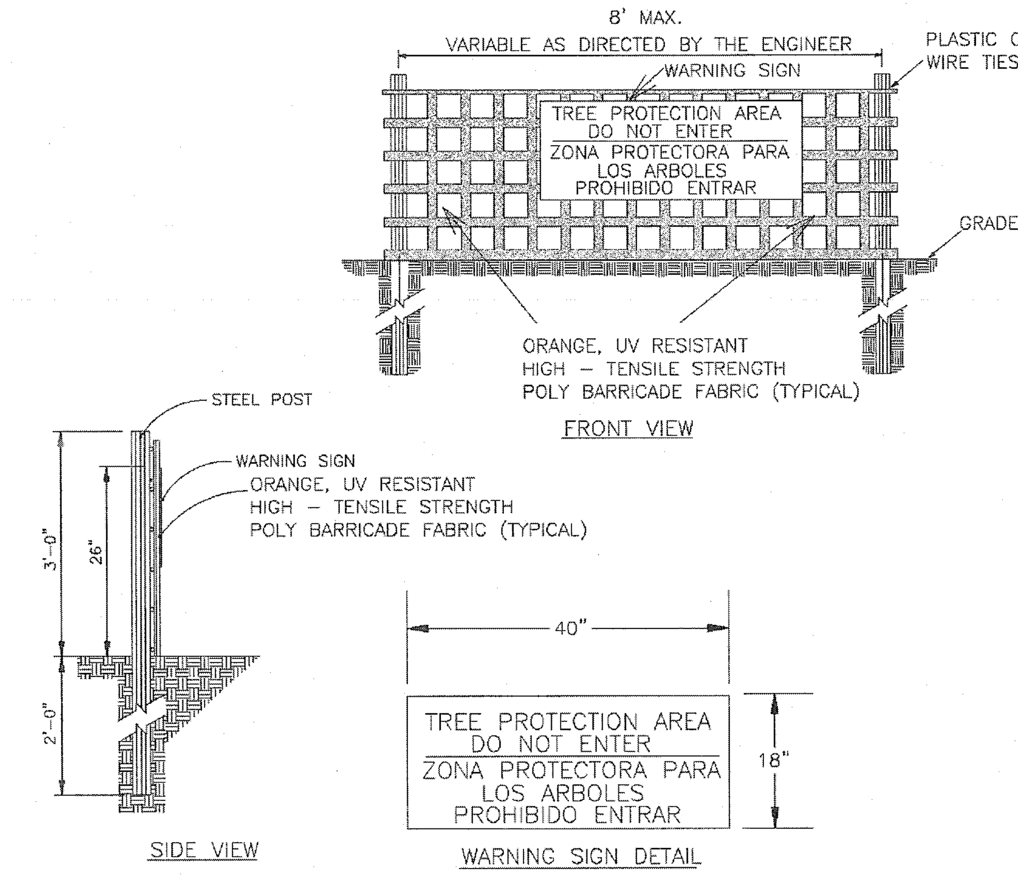

NOTES:

1. THE TREE PROTECTION FENCING SHALL NOT BE VIOLATED FOR THE ENTIRE DURATION OF THE PROJECT WITHOUT APPROVAL FROM URBAN FORESTRY STAFF.
2. WARNING SIGNS TO BE MADE OF DURABLE, WEATHERPROOF MATERIAL. LETTERS TO BE 3" HIGH, MINIMUM, CLEARLY LEGIBLE AND SPACED AS DETAILED.
3. SIGNS SHALL BE PLACED AT 50' MAXIMUM INTERVALS. PLACE A SIGN AT EACH END OF LINEAR TREE PROTECTION AND 50' ON CENTER THEREAFTER. FOR TREE PROTECTION AREAS LESS THAN 100' IN PERIMETER, PROVIDE NO LESS THAN TWO SIGNS PER PROTECTION AREA.
4. ATTACH SIGNS SECURELY TO FENCE POSTS AND FABRIC. MAINTAIN TREE PROTECTION FENCE AND SIGNS THROUGHOUT DURATION OF PROJECT.
5. TREE PROTECTION FENCING AND SIGNAGE SHALL BE REMOVED AFTER CONSTRUCTION.
6. ADDITIONAL SIGNS MAY BE REQUIRED BY CITY OF WILMINGTON, BASED ON ACTUAL FIELD CONDITIONS.

NOTE:
THE CRITICAL ROOT ZONE (CRZ) OF A TREE IS WHERE THE MAJORITY OF A TREE'S ROOTS LAY. 85% OF MOST TREE ROOTS ARE FOUND IN THE TOP 24" OF THE SOIL AND SUPPLY THE MAJORITY OF NUTRIENTS AND WATER. GENERALLY, ROOTS SPREAD OUT 2-3X THE HEIGHT OF THE TREE.

NOTE:
CROWN OF THE TREE IS NEEDED FOR LEAF GROWTH TO PRODUCE OXYGEN, FILTER THE AIR, REDUCE WIND AND SOFTEN NOISE. DO NOT DISFIGURE CROWN WITH INTENSIVE PRUNING.

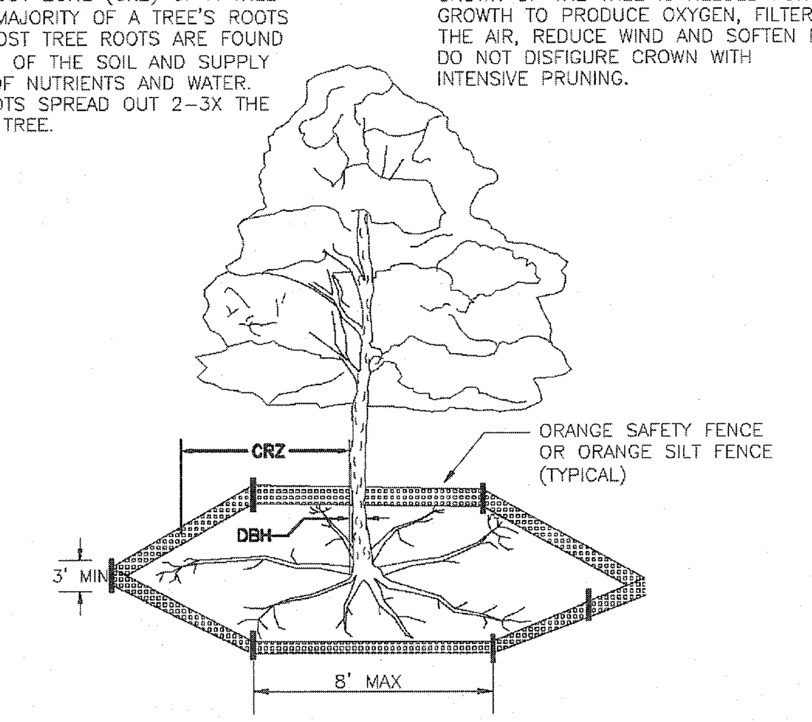

NOTES:
1. PROTECT CRITICAL ROOT ZONE (CRZ) OF TREES PRIOR TO CONSTRUCTION. CLEARLY MARK THE TREES AND ERECT A PROTECTIVE BARRIER AT THE CRZ. BARRIER SHALL BE MAINTAINED UNTIL CONSTRUCTION IS COMPLETE.
2. CRZ RADIUS IS 1 FT PER INCH OF TREE DIAMETER AT BREAST HEIGHT (DBH).
3. IF CONSTRUCTION OCCURS WITHIN THE CRZ, AT LEAST 12" OF MULCH AND/OR LOGGING MATTS SHALL BE PLACED WHERE MACHINERY MANEUVERS TO REDUCE SOIL COMPACTION IN THIS ZONE.
4. WHERE SIDEWALKS AND PATHWAYS PASS WITHIN CRZ, EXTRA CARE SHALL BE TAKEN TO AVOID DAMAGE TO THE ROOTS. ALTERNATE CONSTRUCTION METHODS, SUCH AS A REINFORCED SIDEWALK, SHALL BE IMPLEMENTED AS NECESSARY.
5. FOR ALL TREES, CUTTING OF LARGE STRUCTURAL ROOTS LOCATED NEAR THE BASE OF THE TRUNK IS PROHIBITED. DO NOT COMPACT SOIL BENEATH TREES. NO VEHICLE SHALL BE ALLOWED TO PARK UNDER TREES. NO MATERIALS OR EQUIPMENT SHALL BE STORED BENEATH TREES. DAMAGING THE BARK WITH LAWNMOWERS, CONSTRUCTION EQUIPMENT, OR ANYTHING ELSE IS PROHIBITED. CONTRACTOR SHALL REPAIR DAMAGE TO TREES.
6. FAILING TO INSTALL OR MAINTAIN PROTECTION MEASURES SHALL RESULT IN A STOP WORK ORDER AND FINE OF $500/DAY. DISTURBANCE OTHER THAN THAT ALLOWED ON THE APPROVED PLAN WILL REQUIRE OWNER TO POST A LETTER OF CREDIT FOR 3 YRS FOR TREE MITIGATION.

5 TREE PROTECTION FENCING

EROSION CONTROL NOTES AND MAINTENANCE PLAN:

1. ALL EROSION AND SEDIMENT CONTROL MEASURES WILL BE CHECKED FOR STABILITY AND OPERATION FOLLOWING EVERY RUNOFF-PRODUCING RAINFALL, BUT IN NO CASE, LESS THAN ONCE EVERY WEEK AND WITHIN 24 HOURS OF EVERY HALF-INCH RAINFALL.

2. ALL POINTS OF EGRESS WILL HAVE CONSTRUCTION ENTRANCES THAT WILL BE PERIODICALLY TOP-DRESSED WITH AN ADDITIONAL 2 INCHES OF #4 STONE TO MAINTAIN PROPER DEPTH. THEY WILL BE MAINTAINED IN A CONDITION TO PREVENT MUD OR SEDIMENT FROM LEAVING THE SITE. IMMEDIATELY REMOVE OBJECTIONABLE MATERIAL SPILLED WASHED OR TRACKED ONTO THE CONSTRUCTION ENTRANCE OR ROADWAYS.

3. SEDIMENT WILL BE REMOVED FROM HARDWARE CLOTH AND GRAVEL INLET PROTECTION, BLOCK AND GRAVEL INLET PROTECTION, ROCK DOUGHNUT INLET PROTECTION AND ROCK PIPE INLET PROTECTION WHEN THE DESIGNED STORAGE CAPACITY HAS BEEN HALF FILLED WITH SEDIMENT. ROCK WILL BE CLEANED OR REPLACED WHEN THE SEDIMENT POOL NO LONGER DRAINS AS DESIGNED. DEBRIS WILL BE REMOVED FROM THE ROCK AND HARDWARE CLOTH TO ALLOW PROPER DRAINAGE. SILT SACKS WILL BE EMPTIED ONCE A WEEK AND AFTER EVERY RAIN EVENT. SEDIMENT WILL BE REMOVED FROM AROUND WATTLES, BEAVER DAMS, DANDY SACKS AND SOCKS ONCE A WEEK AND AFTER EVERY RAIN EVENT.

4. DIVERSION DITCHES WILL BE CLEANED OUT IMMEDIATELY TO REMOVE SEDIMENT OR OBSTRUCTIONS FROM THE FLOW AREA. THE DIVERSION RIDGES WILL ALSO BE REPAIRED. SWALES MUST BE TEMPORARILY STABILIZED WITHIN 21 CALENDAR DAYS OF CEASE OF ANY PHASE OF ACTIVITY ASSOCIATED WITH A SWALE.

5. SEDIMENT WILL BE REMOVED FROM BEHIND THE SEDIMENT FENCE WHEN IT BECOMES HALF FILLED. THE SEDIMENT FENCE WILL BE REPAIRED AS NECESSARY TO MAINTAIN A BARRIER. STAKES MUST BE STEEL. STAKE SPACING WILL BE 6 FEET MAX. WITH THE USE OF EXTRA STRENGTH FABRIC, WITHOUT WIRE BACKING. STAKE SPACING WILL BE 8 FEET MAX. WHEN STANDARD STRENGTH FABRIC AND WIRE BACKING ARE USED. IF ROCK FILTERS ARE DESIGNED AT LOW POINTS IN THE SEDIMENT FENCE, THE ROCK WILL BE REPAIRED OR REPLACED IF IT BECOMES HALF-FULL OF SEDIMENT, NO LONGER DRAINS AS DESIGNED OR IS DAMAGED.

6. LAND QUALITY REQUIRES:
ALL SEEDED AREAS WILL BE FERTILIZED, RESEEDED AS NECESSARY, AND MULCHED, ACCORDING TO SPECIFICATIONS IN THE VEGETATIVE PLAN, TO MAINTAIN A VIGOROUS, DENSE VEGETATIVE COVER. ALL SLOPES WILL BE STABILIZED WITHIN 21 CALENDAR DAYS. ALL OTHER AREAS WILL BE STABILIZED WITHIN 15 WORKING DAYS.
WATER QUALITY REQUIRES:
ALL SEEDED AREAS WILL BE FERTILIZED, RESEEDED AS NECESSARY AND MULCHED ACCORDING TO SPECIFICATIONS IN THE VEGETATIVE PLAN TO MAINTAIN A VIGOROUS, DENSE VEGETATIVE COVER. ALL PERIMETER DIKES, SWALES, DITCHES, PERIMETER SLOPES, ALL SLOPES STEEPER THAN 3' HORIZONTAL TO 1' VERTICAL (3:1) AND ALL HIGH QUALITY WATER (HQW) ZONES SHALL BE PROVIDED TEMPORARY OR PERMANENT STABILIZATION WITH GROUND COVER AS SOON AS PRACTICABLE BUT IN ANY EVENT WITHIN SEVEN (7) CALENDAR DAYS FROM THE LAST LAND-DISTURBING ACTIVITY. ALL OTHER DISTURBED AREAS SHALL BE PROVIDED TEMPORARY OR PERMANENT STABILIZATION WITH GROUND COVER AS SOON AS PRACTICABLE BUT IN ANY EVENT WITHIN FOURTEEN (14) CALENDAR DAYS FROM THE LAST LAND-DISTURBING ACTIVITY.

TEMPORARY/PERMANENT GRASS SPECIFICATION:

1. CHISEL COMPACTED AREAS AND SPREAD TOPSOIL 3 INCHES DEEP OVER ADVERSE SOIL CONDITIONS.
2. RIP THE ENTIRE AREA TO A 6 INCH DEPTH.
3. REMOVE ALL ROCKS, ROOTS AND OTHER OBSTRUCTIONS LEAVING SURFACES SMOOTH AND UNIFORM.
4. APPLY AGRICULTURAL LIME AND FERTILIZER UNIFORMLY AND MIX WITH SOIL.
   LIME: 45 LBS. PER 1000 S.F.
   PHOSPHOROUS: 20 LBS PER 1000 S.F.
   FERTILIZER: 17 LBS. PER 1000 S.F.
5. CONTINUE TILLAGE UNTIL A WELL PULVERIZED, FIRM, UNIFORM SEED BED IS PREPARED 4-6 INCHES DEEP.
6. SEED ON A FRESHLY PREPARED SEED BED AND COVER SEED LIGHTLY. 2 - 3 LBS PER 1000 S.F. (SEE MIXTURE BELOW)
7. MULCH IMMEDIATELY AFTER SEEDING AND ANCHOR MULCH.
   GRAIN STRAW & HAY AT 75 TO 100 LBS PER 1000 S.F.
   WOOD CHIPS AT 500 LBS. PER 1000 S.F.
   JUTE & MESH AS PER MANUFACTURER
8. ASPHALT FOR ANCHORING MULCH SHALL BE TYPE SS-1 EMULSION AND APPLIED AT A RATE OF 1000 GAL. PER ACRE FOR SLOPE STABILIZATION, AND 150 GAL. PER TON OF STRAW FOR ANCHORING STRAW.
9. INSPECT ALL SEEDED AREAS AND MAKE NECESSARY REPAIRS OR RESEED WITHIN THE PLANTING SEASON, IF POSSIBLE. IF GRASS STAND SHOULD BE OVER 60% DAMAGED, REESTABLISH FOLLOWING ORIGINAL LIME, FERTILIZER AND SEEDING RATES.
10. CONSULT CONSERVATION INSPECTOR ON MAINTENANCE, TREATMENT, AND FERTILIZATION AFTER PERMANENT COVER IS ESTABLISHED.
11. SEED FOR TEMPORARY AND PERMANENT APPLICATIONS SHALL BE:
   20% CARPET GRASS
   28% BERMUDA GRASS
   20% TURF FESCUE
   10% CREEPING RED FESCUE
   20% ANNUAL RYE GRAIN
   *BERMUDA SEED SHALL BE HULLED FOR WARM WEATHER PLANTING. PURITY OF SEED SHALL BE A MIN. OF 98% AND GERMINATION SHALL BE A MIN. OF 85%.

ALL DISTURBED AREA SHALL BE SEEDED WITHIN 7-14 DAYS OF THE COMPLETION OF GRADING. SEE EROSION CONTROL AND MAINTENANCE NOTES. CONSULT CONSERVATION ENGINEER OR SOIL CONSERVATION SERVICE FOR ADDITIONAL INFORMATION CONCERNING OTHER ALTERNATIVES FOR VEGETATION OF DENUDED AREAS. THE ABOVE VEGETATION RATES ARE THOSE WHICH DO WELL UNDER LOCAL CONDITIONS, OTHER SEEDING SCHEDULES MAY BE POSSIBLE.

SITE WORK NOTES:

1. THE CONTRACTOR SHALL VISIT THE SITE TO BECOME FAMILIAR WITH FIELD CONSTRUCTION CONDITIONS.
2. CONTRACTOR SHALL COORDINATE WORK WITHIN NCDOT AND LOCAL RIGHT OF WAYS WITH PROPER AUTHORITIES AND SHALL MEET ANY REQUIREMENTS AS TO TRAFFIC CONTROL AND CONNECTION TO EXISTING STREETS.
3. CLEARING AND GRUBBING: REMOVE ALL TREES AS REQUIRED UNLESS OTHERWISE NOTED TO REMAIN, STUMPS, ROOTS, SHRUBBERY, ASPHALT, CONCRETE, STRUCTURES, BURIED UTILITIES, STORAGE TANKS, ETC. WITHIN LIMITS OF CONSTRUCTION.
4. STRIPPING: BEFORE EXCAVATING OR FILLING, REMOVE ALL TOPSOIL, WOOD, LEAVES, AND ANY OTHER UNSUITABLE MATERIAL.
5. MUCKING: REMOVE ANY SOFT, ORGANIC SILT MATERIALS AND EXISTING BURIED CONSTRUCTION DEBRIS AS REQUIRED AND FILL TO SUBGRADE ELEVATIONS WITH A CLEAN SELECT-FILL COMPACTED AS SPECIFIED.
6. DISPOSAL: CLEARED, GRUBBED, STRIPPED OR EXCAVATED SPOIL SHALL BE REMOVED FROM SITE AND DISPOSED OF IN ACCORDANCE WITH ALL APPLICABLE LOCAL AND STATE CODES.
7. BORROW MATERIAL: THE CONTRACTOR SHALL FURNISH BORROW MATERIAL REQUIRED FROM OFF SITE AND OBTAIN ALL REQUIRED PERMITS ASSOCIATED WITH BORROW OPERATIONS.
8. FILL AND COMPACTION: AFTER STRIPPING THOSE AREAS DESIGNATED TO RECEIVE FILL SHOULD BE PROOFROLLED. THE TOP 8" OF SUBGRADE SHALL BE COMPACTED TO AT LEAST 98% OF MAXIMUM DENSITY AT OPTIMUM MOISTURE CONTENT. ANY AREA WHICH PUMPS OR RUTS EXCESSIVELY SHOULD BE UNDERCUT AND REPLACED WITH A CLEAN, SILTY OR CLAYEY SAND HAVING A UNIFIED SOIL CLASSIFICATION OF SP, SM, OR SC. FILL MATERIAL 5" OUTSIDE OF BUILDING AREAS SHALL THEN BE PLACED IN LAYERS NOT TO EXCEED 8" AND COMPACTED TO AT LEAST 95% OF THE STANDARD PROCTOR MAXIMUM DRY DENSITY (ASTM D-698) WITH THE UPPER 12 INCHES OF SUBGRADE BEING COMPACTED TO 98% OF THE STANDARD PROCTOR MAXIMUM DRY DENSITY. FILL MATERIALS WITHIN BUILDING AREAS TO A LINE OUTSIDE THE BUILDING AREAS SHALL BE PLACED IN LAYERS NOT TO EXCEED 8" AND COMPACTED TO AT LEAST 98% OF THE STANDARD PROCTOR MAXIMUM DRY DENSITY (ASTM D-698) WITH THE UPPER 12 INCHES OF SUBGRADE BEING COMPACTED IN 6 INCH LAYERS TO 100% OF THE STANDARD PROCTOR MAXIMUM DRY DENSITY. IN AREAS WHERE NO STRUCTURAL FILL IS TO BE PLACED THE UPPER 12 INCHES OF IN-PLACE SUBGRADE SHOULD BE COMPACTED TO AT LEAST 98% OF THE STANDARD PROCTOR MAXIMUM DRY DENSITY. IF THE MATERIAL IS TOO DRY TO COMPACT TO THE REQUIRED DENSITY EACH LAYER SHALL BE WETTED IN ACCORDANCE WITH COMPACTION REQUIREMENTS. IF THE MATERIAL IS TOO WET TO SECURE PROPER COMPACTION, IT SHALL BE HARROWED REPEATEDLY OR OTHERWISE AERATED WITH SUITABLE EQUIPMENT UNTIL OPTIMUM MOISTURE CONTENT IS OBTAINED. FILL SHALL BE PLACED IN SUCH A MANNER THAT THE SURFACE WILL DRAIN READILY AT ALL TIMES. SEE STRUCTURAL NOTES AND SOILS REPORT FOR ADDITIONAL REQUIREMENTS.
9. LAYOUT: THE CONTRACTOR SHALL PROVIDE ALL LAYOUT REQUIRED TO CONSTRUCT HIS WORK.
10. THE CONTRACTOR IS RESPONSIBLE FOR THE LOCATION AND PROTECTION OF EXISTING UTILITIES DURING CONSTRUCTION.
11. EXISTING BOUNDARY AND TOPOGRAPHIC INFORMATION FROM SURVEY BY ATLANTIC COAST SURVEY, PLLC AND PROVIDED BY OWNER.
12. THE CONTRACTOR SHALL VERIFY DIMENSIONS AT JOBSITE.
13. THE CONTRACTOR IS RESPONSIBLE FOR THE COORDINATION OF RELOCATION OR DISCONNECTION OF ALL EXISTING UTILITIES WITH APPLICABLE AGENCIES AND AUTHORITIES.
14. ALL PAVEMENT AND BASE MATERIALS AND WORKMANSHIP SHALL CONFORM TO NCDOT STANDARDS.
15. WATER AND SEWER SERVICES SHALL BE INSTALLED TO MEET LOCAL AND STATE PLUMBING CODES. METER AND TAPS SHALL MEET ALL LOCAL REQUIREMENTS.
16. ALL AREAS SHALL BE GRADED FOR POSITIVE DRAINAGE.
17. SEE SOILS REPORT FOR ADDITIONAL REQUIREMENTS.
18. CONTRACTOR SHALL NOTE THAT EARTHWORK QUANTITIES ARE HIS RESPONSIBILITY. PLANS DO NOT REPRESENT A BALANCED EARTHWORK CONDITION.
19. REINF. CONC. PIPE SHALL BE CLASS III W/RUBBER GASKETED JOINT OR "RAM NECK". INSTALL PER MANUFACTURER'S REQUIREMENTS.
20. USE WHITE LANE MARKING PAINT FOR ALL PAVEMENT MARKINGS. PAINT SHALL BE A CHLORINATED RUBBER ALKYD, FS TT-P-115, TYPE III, FACTORY MIXED, QUICK DRYING, NON-BLEEDING.

CALL 811 (3) WORKING DAYS BEFORE YOU DIG.

For each open utility cut of City streets, a $325 permit shall be required from the City prior to occupancy and/or project acceptance.

CITY OF WILMINGTON NORTH CAROLINA
Public Services • Engineering Division
APPROVED STORMWATER MANAGEMENT PLAN
Date:________ Permit #________
Signed:________

Approved Construction Plan

	Name	Date
Planning		
Traffic		
Fire		

SYMBOL	DATE	DESCRIPTION	BY

REVISIONS

© 2014 NORRIS & TUNSTALL

NOTES AND DETAILS
ORIOLE PARTNERS OFFICE
4717 ORIOLE DRIVE
WILMINGTON, N. C. 28403

OWNER/DEVELOPER
ORIOLE PARTNERS OFFICE
DON HARLEY, MEMBER/MANAGER
ORIOLE PARTNERS, LLC
1430 COMMONWEALTH DR., SUITE 102
WILMINGTON, NC 28403
910-350-1200

NORRIS & TUNSTALL
CONSULTING ENGINEERS, P.C.
902 MARKET STREET
WILMINGTON, NC 28401
PHONE (910) 343-9653
1429 ASH-LITTLE RIVER RD. NW
ASH, NC 28420
PHONE (910) 287-5900
licence #C-3641

16012
DES. JST
CKD. JPN
DRWN. NKS
DATE 2/10/16

NORTH CAROLINA PROFESSIONAL ENGINEER PRELIMINARY J. N. S. TUNSTALL

C4

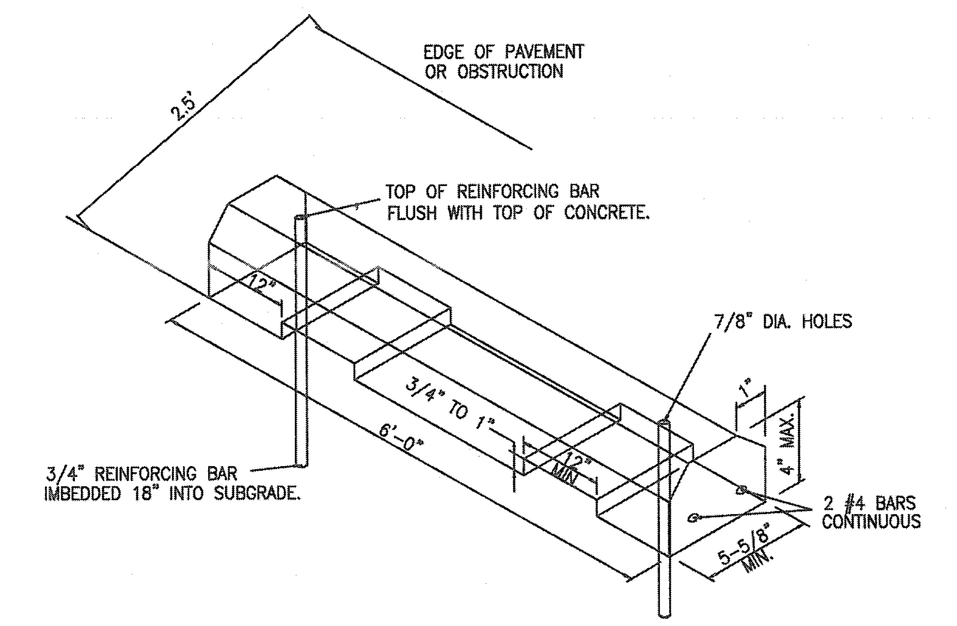

NOT TO SCALE

1 CONCRETE WHEEL STOP DETAIL

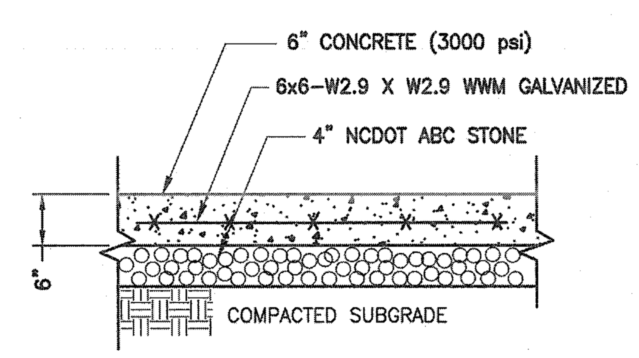

NOTES:
1. CONTROL JOINTS SHALL BE EVERY 15 FT. (MAX.) AND EXPANSION JOINTS SHALL BE EVERY 50 FT. (MAX).
2. PAVEMENT SECTION MAY VARY DEPENDING UPON FIELD CONDITIONS. THE PAVING CONTRACTOR SHALL COORDINATE WITH OWNER REPRESENTATIVE AND GEOTECHNICAL ENGINEER TO DETERMINE ACTUAL PAVEMENT SECTION.

NOT TO SCALE

2 HEAVY DUTY CONCRETE PAVEMENT SECTION

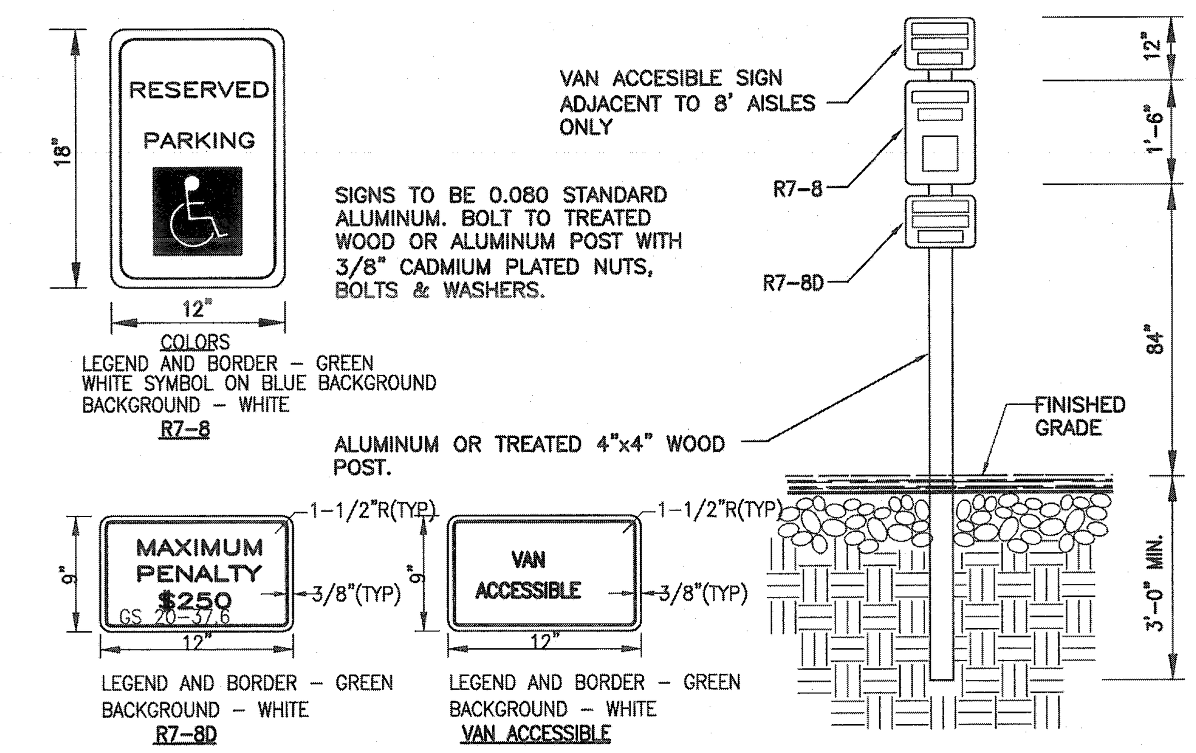

NOT TO SCALE

3 TYPICAL HANDICAPPED SIGN DETAIL

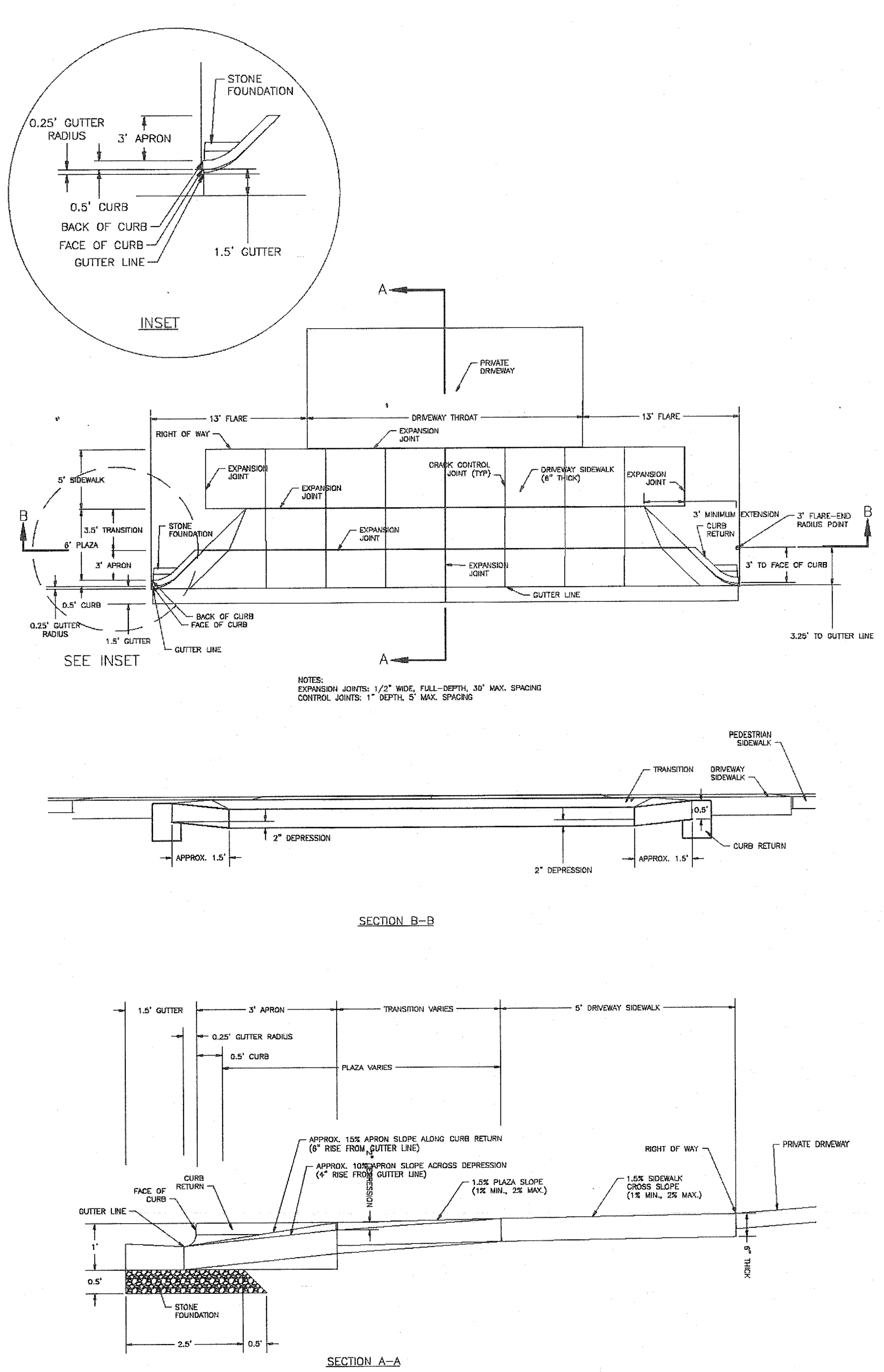

4 STANDARD CITY OF WILMINGTON DRIVE WAY DETAIL

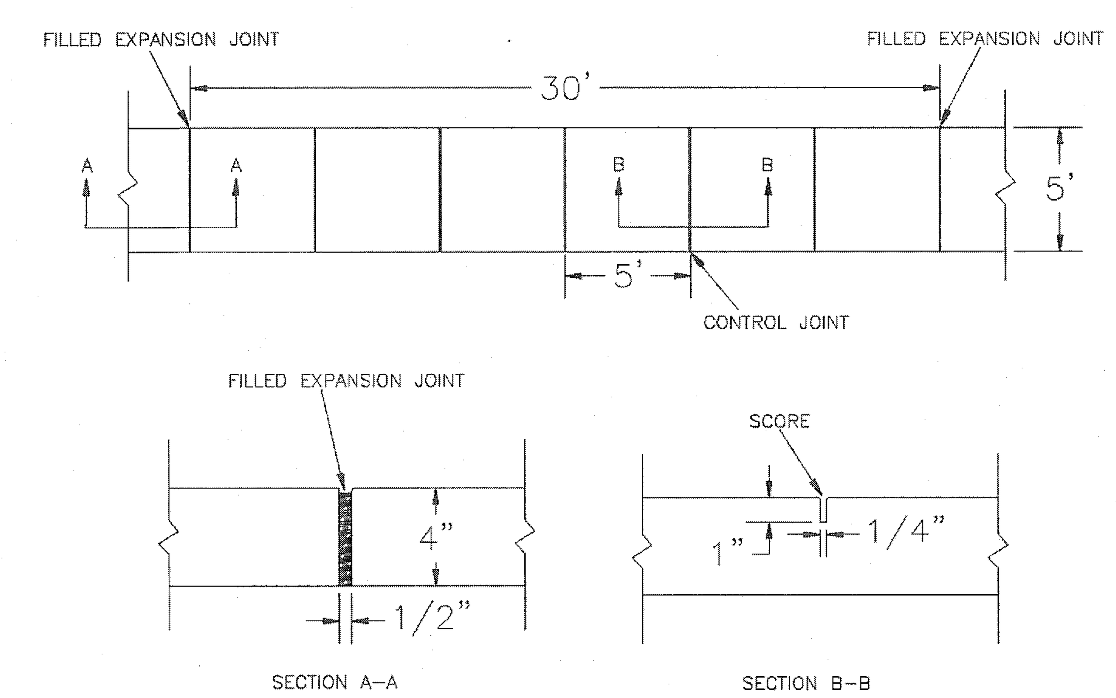

NOTES:
1. JOINT MATERIAL TO COMPLY WITH CURRENT NCDOT STANDARDS.
2. SANITARY SEWER CLEAN–OUTS, WATER METERS, MANHOLES, AND VALVE LIDS TO BE LOCATED OUTSIDE SIDEWALK WHERE FEASIBLE.
3. MINIMUM SIDEWALK WIDTH TO BE 6' MINIMUM IF PLACED AT BACK OF CURB.
4. CONCRETE FOR ALL SIDEWALKS (EXCEPT ANY PORTION CONTAIN WITHIN A DRIVEWAY APRON) SHALL BE CLASS "A" – 3,000 PSI.
5. MINIMUM REPLACEMENT FOR REPAIRS IS A 5' X 5' PANEL
6. 4" STONE BASE MAY BE REQUIRED FOR POOR SOIL CONDITIONS
7. MINIMUM DEPTH FOR TUNNELING BELOW SIDEWALK IS 12"
8. MAX ADJACENT GROUND SLOPE WITHOUT RAILING IS 2:1
9. MIN GRADE FOR PROPER DRAINAGE IS 1% IN AT LEAST 1 DIRECTION. MAX CROSS SLOPE IS 2%. MAX LONGITUDINAL SLOPE IS 8.3%, 10% IF LIMITED BY EXISTING CONDITIONS, OR NO GREATER THAN THE SLOPE OF THE EXISTING ADJACENT ROAD.

6 STANDARD SIDEWALK DETAIL

For each open utility cut of City streets, a $325 permit shall be required from the City prior to occupancy and/or project acceptance.

CITY OF WILMINGTON NORTH CAROLINA
Public Services • Engineering Division
APPROVED STORMWATER MANAGEMENT PLAN
Date:__________ Permit #__________
Signed:__________

CITY OF WILMINGTON STANDARD NOTES:

1. CONTACT THE NORTH CAROLINA ONE CALL CENTER PRIOR TO DOING ANY DIGGING AT 1–800–632–4949.
2. PRIOR TO ANY CLEARING, GRADING OR CONSTRUCTION ACTIVITY, TREE PROTECTION FENCING WILL BE INSTALLED AROUND PROTECTED TREES OR GROVES OF TREES AND NO CONSTRUCTION WORKERS, TOOLS, MATERIALS, OR VEHICLES ARE PERMITTED WITHIN THE TREE PROTECTION FENCING;
3. ALL PAVEMENT MARKINGS IN PUBLIC RIGHTS–OF–WAY AND FOR DRIVEWAYS ARE TO BE THERMOPLASTIC AND MEET CITY AND/OR NCDOT STANDARDS.
4. ALL PARKING STALL MARKINGS AND LANE ARROWS WITHIN THE PARKING AREAS SHALL BE WHITE.
5. INSTALL REFLECTORS PER CITY AND NCDOT STANDARDS. TRAFFIC ENGINEERING MUST APPROVE OF PAVEMENT MARKING LAYOUT PRIOR TO ACTUAL STRIPING.
6. ALL TRAFFIC CONTROL SIGNS AND MARKINGS OFF THE RIGHT–OF–WAY ARE TO BE MAINTAINED BY THE PROPERTY OWNER IN ACCORDANCE WITH MUTCD STANDARDS.
7. TRAFFIC CONTROL DEVICES (INCLUDING SIGNS AND PAVEMENT MARKINGS) IN AREAS OPEN TO PUBLIC TRAFFIC ARE TO MEET MUTCD (MANUAL ON UNIFORM TRAFFIC CONTROL DEVICES) STANDARDS.
8. IT SHALL BE THE RESPONSIBILITY OF THE SUBDIVIDER TO ERECT OFFICIAL STREET NAME SIGNS AT ALL INTERSECTIONS ASSOCIATED WITH THE SUBDIVISION IN ACCORDANCE WITH THE TECHNICAL STANDARDS AND SPECIFICATIONS MANUAL. THE SUBDIVIDER MAY ACQUIRE AND ERECT OFFICIAL STREET NAME SIGNS OR MAY CHOOSE TO CONTRACT WITH THE CITY TO INSTALL THE STREET SIGNS AND THE SUBDIVIDER SHALL PAY THE COST OF SUCH INSTALLATION. CONTACT TRAFFIC ENGINEERING AT 341–7888 TO DISCUSS INSTALLATION OF TRAFFIC AND STREET NAME SIGNS. POSTED STREET NAMES MUST BE APPROVED PRIOR TO INSTALLATION OF STREET NAME SIGNS.
9. CONTACT TRAFFIC ENGINEERING AT 341–7888 FORTY–EIGHT HOURS PRIOR TO ANY EXCAVATION IN THE RIGHT–OF–WAY.
10. A UTILITY CUT PERMIT IS REQUIRED FOR EACH OPEN CUT OF A CITY STREET. CONTACT 341–5888 FOR MORE DETAILS. IN CERTAIN CASES AN ENTIRE RESURFACING OF THE AREA BEING OPEN CUT MAY BE REQUIRED.
11. ANY BROKEN OR MISSING SIDEWALK PANELS, DRIVEWAY PANELS, AND CURBING WILL BE REPLACED.
12. CONTACT KAREN DIXON AT 341–7888 TO DISCUSS STREET LIGHTING OPTIONS.
13. PROJECT SHALL COMPLY WITH CFPUA CROSS CONNECTION CONTROL REQUIREMENTS. WATER METER(S) CANNOT BE RELEASED UNTIL ALL REQUIREMENTS ARE MET AND THE STATE HAS GIVEN THEIR FINAL APPROVAL. CALL 343–3910 FOR INFORMATION.
14. IF THE CONTRACTOR DESIRES CFPUA WATER FOR CONSTRUCTION HE SHALL APPLY IN ADVANCE FOR THIS SERVICE AND MUST PROVIDE A REDUCED PRESSURE ZONE (RPZ) BACKFLOW PREVENTION DEVICE ON THE DEVELOPER'S SIDE OF THE WATER METER BOX.
15. ANY IRRIGATION SYSTEM SUPPLIED BY CFPUA WATER SHALL COMPLY WITH CFPUA CROSS CONNECTION CONTROL REGULATIONS. CALL 332–6558 FOR INFORMATION.
16. ANY BACKFLOW PREVENTION DEVICES REQUIRED BY CFPUA WILL NEED TO BE ON THE LIST OF APPROVED DEVICES BY USCFCCCHR OR ASSE.
17. WHEN PVC WATER MAINS AND/OR POLYETHYLENE SERVICES ARE PROPOSED, THE PIPES ARE TO BE MARKED WITH NO. 10 INSULATED SINGLE STRAND COPPER WIRE INSTALLED THE ENTIRE LENGTH AND SECURED TO ALL VALVES. THIS WIRE IS TO BE ACCESSIBLE AT ALL FIRE HYDRANTS AND WATER METER BOXES TO AID IN FUTURE LOCATION OF FACILITIES.
18. THE NUMBER AND SPACING OF DRIVEWAYS FOR ALL INTERCONNECTED SITES WILL BE DETERMINED BY THE COMBINED FRONTAGE OF THE INTERCONNECTED PROPERTIES.
19. UNDERGROUND FIRE LINE MUST BE PERMITTED AND INSPECTED BY THE WILMINGTON FIRE DEPARTMENT FROM THE PUBLIC ROW TO THE BUILDING. CONTACT THE WILMINGTON FIRE DEPARTMENT DIVISION OF FIRE AND LIFE SAFETY AT 910–343–0696 FOR ADDITIONAL INFORMATION.
20. A LANDSCAPE PLAN INDICATING THE LOCATION OF REQUIRED STREET TREES SHALL BE SUBMITTED TO THE CITY OF WILMINGTON TRAFFIC ENGINEER DIVISION AND PARKS AND RECREATIN DEPARTMENT FOR REVIEW AND APPROVAL PRIOR TO THE RECORDING OF THE FINAL PLAT.
21. IF AND IRRIGATION SYSTEM IS PLANNED FOR THE SITE, UTILIZE MOISTURE SENSORS.
22. ALL PROPOSED VEGETATION WITHIN THE SIGHT TRIANGLES SHALL NOT INTERFERE WITH CLEAR VISUAL SIGHT LINES FROM 30"–10'.

UTILITY NOTES FOR FIRE HYDRANTS:

1. FIRE HYDRANTS MUST BE WITHIN 150' OF THE FIRE DEPARTMENT CONNECTION.
2. THE FIRE DEPARTMENT CONNECTION MUST BE WITHIN 40' OF FIRE APPARATUS PLACEMENT.
3. LANDSCAPING AND PARKING CANNOT BLOCK OR IMPEDE THE FIRE DEPARTMENT CONNECTIONS OR FIRE HYDRANTS. A 3' CLEAR SPACE SHALL BE MAINTAINED AROUND THE CIRCUMFERENCE OF THE FIRE HYDRANT CONNECTION AND THE FIRE HYDRANT.
4. FIRE HYDRANTS MUST BE LOCATED WITHIN 8' OF THE CURB.
5. NEW HYDRANTS MUST BE AVAILABLE FOR USE PRIOR TO CONSTRUCTION OF THE BUILDINGS.
6. NEW HYDRANTS MUST BE BROUGHT INTO SERVICE PRIOR TO COMBUSTIBLE MATERIALS BEING DELIVERED TO THE JOB SITE.
7. THE CONTRACTOR SHALL MAINTAIN AN ALL WEATHER ACCESS FOR EMERGENCY VEHICLES AT ALL TIMES DURING CONSTRUCTION.
8. TEMPORARY STREET SIGNS SHALL BE INSTALLED AT EACH STREET INTERSECTION WHEN CONSTRUCTION OF NEW ROADWAYS ALLOWS PASSAGE BY VEHICLES.
9. UNDERGROUND FIRE LINE AND PRIVATE WATER MAINS MUST BE PERMITTED AND INSPECTED BY THE WILMINGTON FIRE DEPARTMENT FROM THE PUBLIC RIGHT–OF–WAY TO THE BUILDING. CONTACT THE WILMINGTON FIRE DEPARTMENT DIVISION OF FIRE AND LIFE SAFETY AT 910–343–0696 FOR ADDITIONAL INFORMATION.
10. A MINIMUM OF 5' SHALL SEPARATE UNDERGROUND FIRE LINES OR PRIVATE WATER MAINS FROM OTHER UNDERGROUND UTILITIES.
11. HYDRANTS SHALL BE OF SUFFICIENT NUMBERS TO ACCOMODATE BASE FIRE FLOW REQUIREMENTS OF THE STRUCTURE.
12. BUILDING CONSTRUCTION TYPE:

Approved Construction Plan

	Name	Date
Planning		
Traffic		
Fire		

SYMBOL	DATE	DESCRIPTION	BY

REVISIONS

© 2015 NORRIS & TUNSTALL

NOTES AND DETAILS

ORIOLE PARTNERS OFFICE
4717 ORIOLE DRIVE
WILMINGTON, N. C. 28403

OWNER/DEVELOPER
ORIOLE PARTNERS OFFICE
DON HARLEY, MEMBER/MANAGER
ORIOLE PARTNERS, LLC
1430 COMMONWEALTH DR., SUITE 102
WILMINGTON, NC 28403
910-350-1200

NORRIS & TUNSTALL
CONSULTING ENGINEERS, P.C.
902 MARKET STREET
WILMINGTON, NC 28401
PHONE (910) 343–9653
1429 ASH–LITTLE RIVER RD. NW
ASH, NC 28420
PHONE (910) 287–5900
licence #C–3641

16012

DES. JST
CKD. JPN
DRWN. NKS
DATE 2/10/16

NORTH CAROLINA PROFESSIONAL ENGINEER — PRELIMINARY — JOHN S. TUNSTALL

C5

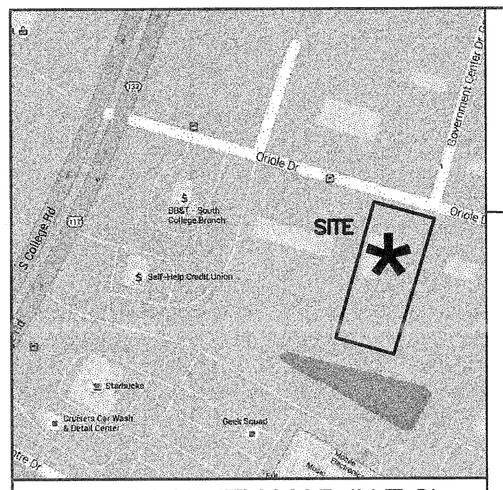

VICINITY MAP (N.T.S)

GOVERNMENT CENTER DR.

ADJOINER ACROSS STREET
COLAP INTERPRISES
D.B. 5892, PG. 1258
ZONED: RB-REGIONAL BUSINESS
USE: RETAIL AUTO

8" WATER LINE

DROP INLET (2' X 2')
RIM ELEVATION: 41.62'

ASPHALT PAVEMENT

ORIOLE DRIVE
60' PUBLIC R/W

INVERT ELEVATION: 39.44'

TOP OF SLOPE

8" SEWER LINE

N80°19'27"W 287.99' (TIE)

S70°59'00"E
130.00' (TOTAL)

100.00'

30.00'

S69°37'56"E 152.87' (TIE)

EIPP

12" DOGWOOD

CREPE MYRTLES (5)

JAPANESE MAPLE

TOE OF SLOPE

20' Building Setback Line

CONCRETE PAD

PORCH

1 STORY RESIDENCE
1,812 Sq.Ft.

A/C PAD

EXISTING DIRT DRIVE

SEWER GRINDER PUMP

HEDGE ROW ALONG PROPERTY LINE

GRAVEL DRIVE

COVERED CONCRETE PORCH

GARAGE
891 Sq.Ft.

81.4'

LOT 2
COLLEGE ACRES SUBDIVISION
SECTION 1-A
M.B. 8, PG. 79

N/F
ORIOLE PARTNERS, LLC
D.B. 5090, PG. 363

S19°01'00"W 300.00'

CLOSED PUBLIC RIGHT OF WAY
D.B. 5778, PG. 2721

N70°58'49"W 299.99'

10' Building Setback Line

Be SOILS

Mu SOILS

Le SOILS

AREA OF PREVIOUSLY DETERMINED NON-JURISDICTIONAL ISOLATED WETLANDS. (0.19± AC)

N70°58'49"W 130.14'

S71°15'00"E 29.90' (TIE)

LOT 4
COLLEGE ACRES SUBDIVISION
SECTION 1-A
M.B. 8, PG. 79

ZONED: R-15
(RESIDENTIAL)

N/F
JEFFREY W. McDOWELL
D.B. 4023, PG. 841
USE: RESIDENTIAL

LOT 4A
RAIFORD G. TRASK SUBDIVISION
D.B. 896, PG. 483

ZONED: R-15
(RESIDENTIAL)

N/F
JEFFREY W. McDOWELL
D.B. 4023, PG. 841
USE: RESIDENTIAL

LOT 2A
RAIFORD G. TRASK SUBDIVISION
D.B. 896, PG. 483

N/F
ORIOLE PARTNERS, LLC
D.B. 5090, PG. 363

N/F
ST. JOHN'S LODGE
NO. 1 A.F. & A.M.
D.B. 1108, PG. 549

ZONED: O & I-1
(FRATERNAL ORGNIZATION)
USE: FRATERNAL LODGE
RECREATIONAL - PRIVATE

N/F
PHDBOXLEGE, LLC
D.B. 5807, PG. 2409

ZONED: RB
(REGIONAL BUSINESS)
USE: NEIGHBOHOOD - RETAIL

N80°19'27"W 345.55' (TIE)

INVENTORY SITE DATA

USE:	OFFICE
SITE ADDRESS:	4718 ORIOLE DRIVE
PARCEL ID#:	R04920-003-004-000
MAP ID#:	314705.19.6326.000
PARCEL AREA:	0.90 AC (39,204 SF)
ZONING:	O&I-1 OFFICE AND INSTITUTIONAL
CAMA LAND USE:	URBAN
SOIL TYPES:	Be, Mu, Le

CAMA LAND USE: URBAN
SITE DOES NOT LIE WITHIN 100 YEAR FLOOD PLAIN
NO CAMA AEC OR SETBACKS

HISTORICAL SITE:	NONE
CEMETERY:	NONE
FORESTED AREA:	SEE PLAN FOR TREE SURVEY
WETLANDS:	AREA OF PREVIOUSLY DETERMINED NON-JURISDICTIONAL ISOLATED WETLANDS. (0.19± AC)
ENDANGERED SPECIES/HABITAT:	NONE REPORTED

For each open utility cut of City streets, a $325 permit shall be required from the City prior to occupancy and/or project acceptance.

CITY OF WILMINGTON NORTH CAROLINA
Public Services • Engineering Division
STORMWATER MANAGEMENT PLAN

Date:_____ Permit #_____

Signed: _____

Approved Construction Plan

	Name	Date
Planning		
Traffic		
Fire		

NCDENR PWSS WATER PERMIT #: _____
WATER CAPACITY: _____ GPD
DWQ SEWER PERMIT #: _____
SEWER CAPACITY: _____ GPD
SEWER SHED # AND PLANT: _____
SEWER TO FLOW THROUGH NEI: YES or NO (CIRCLE ONE)

SCALE: 1" = 20'
0 20 40 60

SYMBOL	DATE	DESCRIPTION	BY
		REVISIONS	

© 2016 NORRIS & TUNSTALL

INVENTORY SITE
ORIOLE PARTNERS OFFICE
4717 ORIOLE DRIVE
WILMINGTON, N. C. 28403

OWNER/DEVELOPER
ORIOLE PARTNERS OFFICE
DON HARLEY, MEMBER/MANAGER
ORIOLE PARTNERS, LLC
1430 COMMONWEALTH DR., SUITE 102
WILMINGTON, NC 28403
910-350-1200

NORRIS & TUNSTALL
CONSULTING ENGINEERS, P.C.
902 MARKET STREET
WILMINGTON, NC 28401
PHONE (910) 343-9653
1429 ASH-LITTLE RIVER RD. NW
ASH, NC 28420
PHONE (910) 287-5900
licence #C-3641

16012

DES.	JST
CKD.	JPN
DRWN.	NKS
DATE	2/10/16

NORTH CAROLINA PROFESSIONAL ENGINEER SEAL 029971 JOHN P. NORRIS, JR. TUNSTALL
PRELIMINARY
NOT FOR CONSTRUCTION

11

J:\projects\2016\16012 Oriole Partners Office\16012 Plans\dwg\16012_master.dwg, 2/10/2016 7:48:51 AM

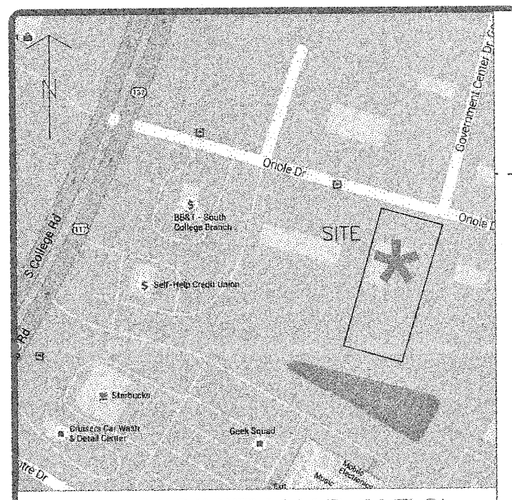

VICINITY MAP (N.T.S)

ADJOINER ACROSS STREET
COLAP INTERPRISES
D.B. 5892, PG. 1258
ZONED: RB-REGIONAL BUSINESS
USE: RETAIL AUTO

N70°58'49"W 287.99' (TIE)

S89°37'56"E 152.87' (TIE)

ASPHALT PAVEMENT

ORIOLE DRIVE
60' PUBLIC R/W

8" WATER LINE

DROP INLET (2' X 2')
RIM ELEVATION: 41.67'

INVERT ELEVATION: 39.44'

TOP OF SLOPE

TOE OF SLOPE

8" SEWER LINE

S70°59'00"E
130.00' (TOTAL)

100.03'

12" DOGWOOD

CREPE MYRTLES (5)

WATERFORD MAPLE

20' Building Setback Line

CONCRETE PAD

PORCH

1 STORY RESIDENCE
1,812 Sq.Ft.

A/C PAD

EXISTING DRIVE

SEWER GRINDER PUMP

GRAVEL DRIVE

HEDGE ROW ALONG PROPERTY LINE

CONCRETE TO PORCH

GARAGE
891 Sq.Ft.

LOT 4
COLLEGE ACRES SUBDIVISION
SECTION 1-A
M.B. 8, PG. 79

ZONED: R-15
(RESIDENTIAL)

N/F
JEFFREY W. McDOWELL
D.B. 4023, PG. 841
USE: RESIDENTIAL

N/F
ST. JOHN'S LODGE
NO. 1 A.F. & A.M.
D.B. 1108, PG. 549

ZONED: O & I-1
(FRATERNAL ORGNIZATION)
USE: FRATERNAL LODGE
RECREATIONAL - PRIVATE

LOT 2
COLLEGE ACRES SUBDIVISION
SECTION 1-A
M.B. 8, PG. 79

N/F
ORIOLE PARTNERS, LLC
D.B. 5090, PG. 363

CLOSED PUBLIC RIGHT OF WAY
D.B. 5178, PG. 2721

10' Building Setback Line

LOT 2A
RAIFORD G. TRASK SUBDIVISION
D.B. 896, PG. 483

LOT 4A
RAIFORD G. TRASK SUBDIVISION
D.B. 896, PG. 483

ZONED: R-15
(RESIDENTIAL)

N/F
JEFFREY W. McDOWELL
D.B. 4023, PG. 841
USE: RESIDENTIAL

N/F
PHD/MCOLLEGE, LLC
D.B. 5807, PG. 2409

ZONED: RB
(REGIONAL BUSINESS)
USE: NEIGHBOHOOD - RETAIL

N80°18'27"W 345.55' (TIE)

N70°58'49"W 130.14'

S71°15'00"E
29.90' (TIE)

M.B. 8, PG. 79

GRAPHIC SCALE

20 0 10 20 40 80
(IN FEET)
1 inch = 20 ft.

GENERAL NOTES

1. THIS IS A SITE PLAN BASED ON SURVEY PREPARED BY ATLANTIC COAST SURVEY.
2. BASIS OF BEARINGS FOR THIS MAP/PLAT ARE BASED ON MAP BOOK: 8 PAGE: 79.
3. VERTICAL DATUM FOR THIS MAP/PLAT ARE BASED ON NAVD 88
4. ALL DISTANCES ARE HORIZONTAL GROUND DISTANCES UNLESS OTHERWISE NOTED.
5. UNITS ARE U.S. SURVEY FEET UNLESS OTHERWISE NOTED.
6. AREA BY COORDINATE GEOMETRY.
7. NO GRD MONUMENTS FOUND WITHIN 2000' OF SITE.
8. THIS SURVEY PERFORMED AND MAP PREPARED WITHOUT BENEFIT OF A TITLE REPORT. THIS SURVEY SUBJECT TO ANY FACTS AND EASEMENTS WHICH MAY BE DISCLOSED BY A FULL AND ACCURATE TITLE SEARCH.
9. FLOOD NOTE: AS DETERMINED BY GRAPHIC PLOTTING, THIS PROPERTY DOES NOT APPEAR TO BE LOCATED IN A SPECIAL FLOOD HAZARD ZONE PER FEMA FLOOD INSURANCE RATE MAP #3720314700J, EFFECTIVE DATE 4-3-2006.
10. UTILITY STATEMENT: THE UNDERGROUND UTILITIES SHOWN (IF ANY) HAVE BEEN LOCATED FROM COUNTY GIS INFORMATION, EXISTING DRAWINGS & FIELD SURVEY INFORMATION. THE SURVEYOR MAKES NO GUARANTEE THAT THE UTILITIES SHOWN COMPRISE ALL SUCH UTILITIES IN THE AREA, EITHER IN SERVICE OR ABANDONED, OR THAT THE UNDERGROUND UTILITIES SHOWN ARE IN THE EXACT LOCATION INDICATED. HE DOES CERTIFY THAT THEY ARE LOCATED AS ACCURATELY AS POSSIBLE FROM INFORMATION AVAILABLE. THE SURVEYOR HAS NOT PHYSICALLY LOCATED THE UNDERGROUND UTILITIES.
11. COUNTY PARCEL #R04920-003-024-000.
12. TOTAL SITE AREA: 0.306± ACRES
13. MAP & DEED REFERENCES (PER NEW HANOVER COUNTY REGISTRY): MAP BOOK: 8, PAGE: 79 (AND OTHERS THAT MAY BE SHOWN ON THIS MAP)
14. TOTAL IMPERVIOUS: PRE-CONSTRUCTION: 3,223 Sq.Ft.
    POST-CONSTRUCTION: 6,945 Sq.Ft.
15. CAMA LAND USE CLASSIFICATION: URBAN
16. ALL EXISTING TREES SHOWN HEREON SHALL REMAIN.
17. ZONING DISTRICT: O & I-1
18. REQUIRED BUILDINGS SETBACKS:
    FRONT: 20' REAR: 20' SIDE: 10'
19. OFF STREET PARKING BASED ON USE: 8
    MINIMUM PARKING REQUIRED: 8
    MAXIMUM PARKING REQUIRED: 12

SYMBOL LEGEND:

- EIP* EXISTING IRON *PIPE / *ROD
- RBS REBAR SET
- WATER METER
- STORM DRAIN MANHOLE
- DROP / YARD INLET
- SEWER MANHOLE
- MAIL BOX
- SIGN
- TELEPHONE MANHOLE / VAULT
- SEWER CLEAN-OUT
- UTILITY POLE
- GUY WIRE ANCHOR
- ELECTRIC PEDESTAL
- ELECTRIC METER
- LIGHT / LIGHT POLE
- ELECTRIC MANHOLE
- FIBER OPTIC MARKER
- TELEPHONE PEDESTAL

LINETYPE LEGEND:

- SURVEYED LINES (BOUNDARY)
- LINES NOT SURVEYED (ADJOINERS)
- RIGHT-OF-WAY
- STORM PIPE
- OHE OHE OVERHEAD ELECTRIC
- MINOR CONTOUR WITH ELEVATION
- MAJOR CONTOUR WITH ELEVATION

ABBREVIATIONS:

EIP EXISTING IRON PIPE	EIPP EXISTING IRON PIPE (PINCHED TOP)
EIR EXISTING IRON ROD	RCP REINFORCED CONCRETE PIPE
RBS REBAR SET	

16012
JOB NO: 15-1077

©2015

Sheet No. 1 of 1

Scale: AS NOTED
Date: 11.11.2015
Job No. 15-1077
Designed By: ACS
Drawn By: EBS/WRD
Checked By: ACS

No.	Revision	Date	By
1	REVISED TREE TYPES	12-3-15	MDMc
2	REVISED PER REVIEW	12-23-15	EBS

PREPARED FOR:
ORIOLE PARTNERS, LLC
400 CARL STREET, SUITE 202
WILMINGTON, NC 28403

TOPOGRAPHIC SURVEY AND SITE PLAN

4718 ORIOLE DRIVE
Hanover Township, New Hanover County, North Carolina

ATLANTIC COAST SURVEY, PLLC
P.O.B.
PO Box 12368 Wilmington, NC 28405
(910) 292-0889 www.atlanticcoastsurvey.com

J:\Projects\2016\16012 Oriole Partners Office\16012 Plans\dwg\survey folder\01-14-16-E-Mail Attachment from Mikes McColl to JST - site plot to fuststall - corrison 2015.dwg, 2/9/2016 8:19:11 AM