SITE DEVELOPMENT PLAN

FOR

OLEANDER STORAGE II

WILMINGTON, NORTH CAROLINA

FEBRUARY 2016

VICINITY MAP

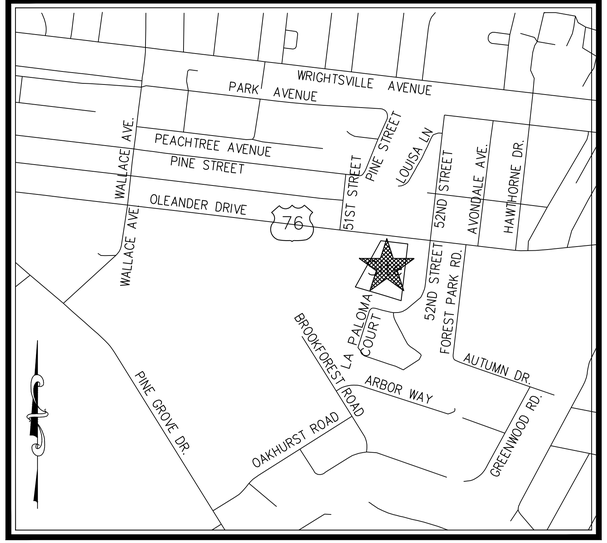

VICINITY MAP
(NTS)

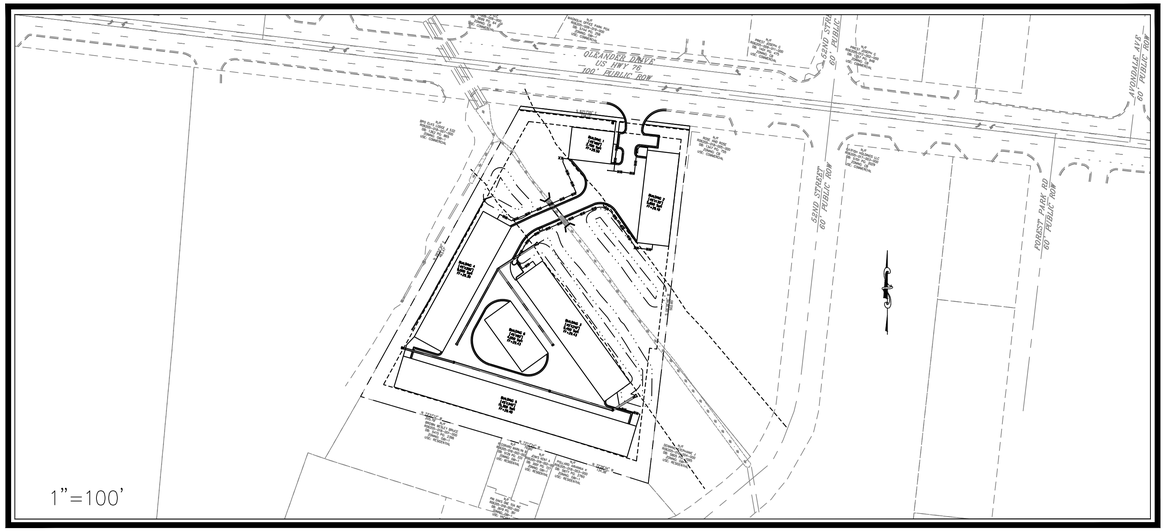

LEGEND

DESCRIPTION	EXISTING	PROPOSED
1' CONTOUR INTERVAL		
5' CONTOUR INTERVAL		
PROPERTY LINE		
ROADWAY CENTERLINE		
RIGHT OF WAY LIMITS		
EASEMENT LINE		
CURB & GUTTER		
SANITARY SEWER FACILITIES		
STORM SEWER FACILITIES		
WATERLINE		
FIRE HYDRANT ASSEMBLY		
WATERWAYS		N/A

	PROPOSED
PROPOSED LOT AND S.F.	X 5,000 s.f.
OPEN SPACE LABEL	Ⓐ
OPEN SPACE	
BUILDING SET BACKS	
PRIVATE SANITARY SET BACKS	
SKIMMER	
STREET SIGN	
404 WETLANDS	
FLOW DIRECTION	
LEVEL SPREADER	

DEVELOPER/OWNER

Penton Storage, LLC.
6105 Oleander Drive, Suite 201
WILMINGTON, NC 28403
PHONE: (910) 452-1410

PREPARED BY:

GSP CONSULTING, PLLC

ENGINEERING

6626 Gordon Road, Unit C, Wilmington, North Carolina 28411 tel: 910-442-7870 fax: 910-799-6659 License # P-0718

INDEX OF SHEETS

SHT C-0	COVER SHEET
SHT C-1	GENERAL NOTES
SHT C-2	EXISTING CONDITIONS PLAN
SHT C-2.1	SITE INVENTORY PLAN
SHT C-3	SITE PLAN
SHT C-4	UTILITY PLAN
SHT C-5	GRADING, DRAINAGE & EROSION & SEDIMENT CONTROL PLAN
SHT C-6.1	INFILTRATION BASIN DETAILS
SHT C-6.2	INFILTRATION BASIN DETAILS
SHT C-7	STANDARD DETAILS
SHT C-8	STANDARD DETAILS
SHT C-9	STANDARD DETAILS
SHT L-1	LANDSCAPE PLAN

SITE DATA TABLE

GENERAL NOTES:

1. NEW HANOVER COUNTY PARCEL NOS.:
   PIN# R06205-018-006-000
   SITE ADDRESS: 5122 OLEANDER DRIVE

2. TOTAL AREA: 154,656 SF± = 3.55 AC.±

3. EXISTING ZONING: CB PROPOSED ZONING: CB

SETBACKS –	REQUIRED	PROPOSED
	20' FRONT	20' FRONT
	10' REAR*	10' REAR*
	0' SIDE**	10' SIDE**

*(25' WHERE ABUTTING A RESIDENTIAL DISTRICT)
**(20' WHERE ABUTTING A RESIDENTIAL DISTRICT)

4. CAMA LAND CLASSIFICATION: WATER RESOURCE PROTECTION

5. THIS PROPERTY IS NOT WITHIN A SPECIAL FLOOD HAZARD ZONE PER FEMA DFIRM 3720314600J EFFECTIVE DATE 04/03/06.

DEVELOPMENT DATA:

TOTAL TRACT AREA = 154,656 SF± = 3.55 AC.±

PROPOSED USE: MINI-WAREHOUSING

NUMBER OF BUILDINGS: 6 (1-STORY)

STORAGE UNITS PROPOSED: 46,350 SF

CONSTRUCTION TYPE: S1

	REQUIRED	PROPOSED
MAX BUILDING HEIGHT	12'	12'
MAX BUILDING COVERAGE	30%	46,350/154,656=(29.97%)

PARKING:
1.15SP/EMPLOYEE IS REQUIRED PER LDC SEC. 18-528 (e) HOWEVER, THIS FACILITY WILL NOT HAVE ANY EMPLOYEES AS THE SITE WILL BE MANAGED FROM FACILITY LOCATED AT 5307 OLEANDER DRIVE

IMPERVIOUS SURFACES –

BUILDINGS –	46,350 S.F.	
PAVEMENT –	29,250 S.F.	
SIDEWALKS –	164 S.F.	
TOTAL –	75,764 S.F.	(48.99%)

Approved Construction Plan

	Name	Date
Planning		
Traffic		
Fire		

For each open utility cut of City streets, a $325 permit shall be required from the City prior to occupancy and/or project acceptance.

CITY OF WILMINGTON NORTH CAROLINA
Public Services ● Engineering Division
APPROVED STORMWATER MANAGEMENT PLAN
Date:_____ Permit #_____
Signed: _____

NORTH CAROLINA PROFESSIONAL SEAL 031315 ENGINEER GARRY S. PAPE
06/30/2016

NOTE:
ALL DESIGN AND CONSTRUCTION SHALL BE IN CONFORMANCE WITH THE CITY OF WILMINGTON LAND DEVELOPMENT CODE, TECHNICAL STANDARDS MANUAL & THE STATE OF NORTH CAROLINA

PROJECT NAME: OLEANDER STORAGE II
GSP CONSULTING PROJECT #: 2016-0002

COORDINATION NOTES

1. THE CONTRACTOR IS REQUIRED TO OBTAIN ANY/ALL PERMITS REQUIRED FOR CONSTRUCTION OF THESE PLANS.
2. ALL WORK IS TO BE IN ACCORDANCE WITH CITY OF WILMINGTON, NEW HANOVER COUNTY, THE CAPE FEAR PUBLIC UTILITY AUTHORITY (CFPUA) AND THE STATE OF NORTH CAROLINA.
3. THE CONTRACTOR IS TO ESTABLISH AND CHECK ALL HORIZONTAL AND VERTICAL CONTROLS TO BE USED WITH THE PROJECT. IN ADDITION, THE CONTRACTOR IS TO COMPUTE THE LAYOUT OF THE ENTIRE SITE PLAN IN ADVANCE OF BEGINNING ANY WORK ASSOCIATED WITH THE SUBJECT PLANS. CONTRACTOR SHALL EMPLOY A PROFESSIONAL SURVEYOR TO PERFORM SITE IMPROVEMENT STAKEOUT(S).
4. ANYTIME WORK IS PERFORMED OFF-SITE OR WITHIN AN EXISTING EASEMENT, THE CONTRACTOR IS TO NOTIFY THE HOLDER OF SAID EASEMENT AS TO THE NATURE OF PROPOSED WORK, AND TO FOLLOW ANY GUIDELINES OR STANDARDS WHICH ARE ASSOCIATED WITH OR REFERENCED IN THE RECORDED EASEMENT.

GENERAL NOTES:

1. EXISTING TOPOGRAPHY, BOUNDARY AND UTILITIES, HAVE BEEN PREPARED BY FIELD SURVEYS BY JOHNNY J. WILLIAMS LAND SURVEYING, P.C., PENTON DEVELOPMENT, INC. AND OTHER AVAILABLE INFORMATION.
2. REASONABLE CARE HAS BEEN EXERCISED IN SHOWING THE LOCATION OF EXISTING UTILITIES ON THE PLANS. THE EXACT LOCATION OF ALL EXISTING UTILITIES IS NOT KNOWN IN ALL CASES. THE CONTRACTOR SHALL EXPLORE THE AREA AHEAD OF DITCHING OPERATIONS BY OBSERVATIONS, ELECTRONIC DEVICES, HAND DIGGING AND BY PERSONAL CONTACT WITH THE UTILITY COMPANIES. IN ORDER TO LOCATE EXISTING UTILITIES IN ADVANCE OF TRENCHING OPERATIONS SO AS TO ELIMINATE OR MINIMIZE DAMAGE TO EXISTING UTILITIES. THE CONTRACTOR SHALL BE RESPONSIBLE FOR ALL COSTS RESULTING FROM ANY DAMAGE TO THE EXISTING UTILITY LINES INCLUDING LOSS OF UTILITY REVENUES. CONTRACTOR SHALL ARRANGE FOR TEMPORARY SUPPORT OF EXISTING UTILITIES, SUCH AS POLES, CONDUITS, FIBER OPTIC CABLES, TELEPHONE CABLES, WATER LINES, ETC.
3. CONTRACTOR SHALL COMPLY WITH THE LATEST REVISIONS AND INTERPRETATIONS OF THE DEPARTMENT OF LABOR SAFETY AND HEALTH REGULATIONS FOR CONSTRUCTION PROMULGATED UNDER THE OCCUPATIONAL SAFETY AND HEALTH ACT.
4. CONTRACTOR SHALL PLAN AND CONSTRUCT WORK SO AS TO CAUSE MINIMUM INCONVENIENCE TO THE OWNER AND THE PUBLIC. THE CONTRACTOR SHALL PROVIDE, ERECT AND MAINTAIN AT ALL TIMES DURING THE PROGRESS OR TEMPORARY SUSPENSION OF WORK, SUITABLE BARRIERS, FENCES, SIGNS OR OTHER ADEQUATE PROTECTION, INCLUDING FLAG MEN AND WATCHMEN AS NECESSARY TO INSURE THE SAFETY OF THE PUBLIC AS WELL AS THOSE ENGAGED IN THE CONSTRUCTION WORK. CONSTRUCTION SIGNING SHALL BE IN ACCORDANCE WITH THE LATEST EDITION OF "CONSTRUCTION AND MAINTENANCE OPERATIONS SUPPLEMENT TO THE MANUAL ON UNIFORM TRAFFIC CONTROL DEVICES" BY THE DOT.
5. ALL MATERIAL CLEARED OR DEMOLISHED BY THE CONTRACTOR IN ORDER TO CONSTRUCT THE WORK SHALL BECOME THE PROPERTY OF THE CONTRACTOR AND SHALL BE PROPERLY DISPOSED OF OFF-SITE.
6. ALL WORK BY THE CONTRACTOR SHALL BE WARRANTED BY THE CONTRACTOR FOR A PERIOD OF ONE YEAR AFTER THE OWNER ACCEPTS THE WORK.
7. CONTRACTOR SHALL CALL THE NORTH CAROLINA ONE-CALL CENTER AT 1 (800) 632-4949 AND ALLOW THE CENTER TO LOCATE EXISTING UTILITIES BEFORE DIGGING.
8. CONTRACTOR SHALL REMOVE ASPHALT, AGGREGATE BASE COURSE, AND CONCRETE CURB & GUTTER WITHIN LIMITS OF DEMOLITION AS SHOWN ON PLAN.

DEMOLITION NOTES

1. CONTRACTOR TO COORDINATE WITH THE OWNER TO PROPERLY MAINTAIN OR RELOCATE EXISTING SERVICE CONNECTIONS WHEN NECESSARY
2. CONTRACTOR IS TO WALK THE SITE AND BECOME FAMILIAR WITH THE SCOPE OF DEMOLITION REQUIRED. ALL DEMOLITION WORK REQUIRED TO CONSTRUCT NEW SITE IMPROVEMENTS WILL BE PERFORMED BY THE CONTRACTOR AND WILL BE UNCLASSIFIED EXCAVATION.
3. DEMOLITION SHALL INCLUDE BUT IS NOT LIMITED TO THE EXCAVATION, HAULING AND OFFSITE DISPOSAL OF CONCRETE PADS, CONCRETE DITCHES, FOUNDATIONS, SLABS, STEPS, AND STRUCTURES; ABANDONED UTILITIES, BUILDINGS, PAVEMENTS AND ALL MATERIALS CLEARED AND STRIPPED TO THE EXTENT NECESSARY AS DIRECTED BY THE SOILS ENGINEER FOR THE INSTALLATION OF THE NEW IMPROVEMENTS AND WITHIN THE LIMITS OF CLEARING AND GRADING AND AS SHOWN ON THESE PLANS.
4. THE CONTRACTOR SHALL PROTECT ALL ADJACENT PROPERTY, STRUCTURES AND UTILITIES ON THE PROPERTY NOT TO BE DEMOLISHED. DAMAGE TO PROPERTIES OF OTHERS DUE TO THE CONTRACTOR'S ACTIVITIES SHALL BE REPLACED IN KIND BY THE CONTRACTOR AT NO COST TO OWNER.
5. ELECTRIC, TELEPHONE, SANITARY SEWER, WATER AND STORM SEWER UTILITIES THAT SERVICE OFF-SITE PROPERTIES SHALL BE MAINTAINED DURING THE CONSTRUCTION PROCESS BY THE CONTRACTOR.
6. EXISTING UTILITIES NOT INTENDED FOR DEMOLITION SHALL BE MAINTAINED, PROTECTED AND UNDISTURBED DURING DEMOLITION
7. ALL EXISTING IMPROVEMENTS INDICATED OR REQUIRED TO BE DEMOLISHED SHALL INCLUDE REMOVAL FROM THE PROPERTY AND PROPER DISPOSAL.
8. CONTRACTOR SHALL COORDINATE RELOCATION OF ALL EXISTING OVER HEAD AND UNDERGROUND UTILITIES INCLUDING CABLE, GAS, TELEPHONE AND ELECTRIC AND ANY OTHER UTILITIES THROUGH THE SITE WITH THE RESPECTIVE COMPANIES.
9. PROVIDE SMOOTH SAW CUT OF EXISTING PAVEMENTS, CURBS AND GUTTERS AND SIDEWALKS TO BE DEMOLISHED.
10. ALL DEMOLITION WORK SHALL BE DONE IN STRICT ACCORDANCE WITH LOCAL, STATE AND FEDERAL REGULATIONS AS WELL AS OSHA REGULATIONS.
11. INFORMATION CONCERNING UNDERGROUND UTILITIES WAS OBTAINED FROM AVAILABLE RECORDS, BUT THE THE CONTRACTOR MUST DETERMINE THE EXACT LOCATION AND ELEVATIONS OF THE MAINS BY DIGGING TEST PITS BY HAND.
12. ANY BROKEN OR MISSING SIDEWALK PANELS, DRIVEWAY PANELS AND CURBING WILL BE REPLACED.

EROSION AND SEDIMENT CONTROL NOTES

GENERAL NOTES:

1. CLEAR AND REMOVE FROM SITE ALL TREES, ROOTS, ROOT MAT, ETC. FROM THE AREA WITHIN DESIGNATED CLEARING LIMITS.
2. PLANT GRASS OVER ALL GRADED AREAS AS SHOWN IN THE TABLE ON THIS SHEET OF CEASE OF ANY GRADING ACTIVITY.
3. CONTRACTOR SHALL BE RESPONSIBLE FOR CLEANING AND RESTORING TO PRE-CONSTRUCTION CONDITIONS ANY AREAS OUTSIDE THE PROJECT LIMITS THAT MAY INADVERTENTLY BE DAMAGED DUE TO THE FAILURE OF THE EROSION MEASURES
4. DURING GRADING AND AFTER GRADING HAS BEEN COMPLETED, CONTRACTOR SHALL CONTINUE TO MAINTAIN PERMANENT AND TEMPORARY EROSION CONTROL MEASURES UNTIL FINAL INSPECTION AND APPROVAL BY NEW HANOVER COUNTY.
5. WATER, FERTILIZE, MOW AND MAINTAIN SPRIGGED, SODDED AND PLANTED AREAS UNTIL FINAL APPROVAL BY NEW HANOVER COUNTY.
6. ANY BORROW MATERIAL BROUGHT ONTO SITE MUST BE FROM A LEGALLY OPERATED MINE OR OTHER APPROVED SOURCE.
7. ANY EXCESS MATERIAL REMOVED FROM SITE MUST BE HAULED TO A LEGALLY OPERATED MINE OR OTHER APPROVED SOURCE.

MAINTENANCE PLAN

ALL EROSION AND SEDIMENT CONTROL MEASURES WILL BE CHECKED FOR STABILITY AND OPERATION FOLLOWING EVERY RUNOFF-PRODUCING RAINFALL, BUT IN NO CASE, LESS THAN ONCE EVERY WEEK AND WITHIN 24 HOURS OF EVERY HALF INCH RAINFALL.

ALL POINTS OF EGRESS WILL HAVE CONSTRUCTION ENTRANCES THAT WILL BE PERIODICALLY TOP-DRESSED WITH AN ADDITIONAL 2 INCHES OF #4 STONE TO MAINTAIN PROPER DEPTH. THEY WILL BE MAINTAINED IN A CONDITION TO PREVENT MUD OR SEDIMENT FROM LEAVING THE SITE. IMMEDIATELY REMOVE OBJECTIONABLE MATERIAL SPILLED WASHED OR TRACKED ONTO THE CONSTRUCTION ENTRANCE OR ROADWAYS.

SEDIMENT WILL BE REMOVED FROM HARDWARE CLOTH AND GRAVEL INLET PROTECTION, BLOCK AND GRAVEL INLET PROTECTION, ROCK DOUGHNUT INLET PROTECTION AND ROCK PIPE INLET PROTECTION WHEN THE DESIGNED STORAGE CAPACITY HAS BEEN HALF FILLED WITH SEDIMENT. ROCK WILL BE CLEANED OR REPLACED WHEN THE SEDIMENT POOL NO LONGER DRAINS AS DESIGNED. DEBRIS WILL BE REMOVED FROM THE ROCK AND HARDWARE CLOTH TO ALLOW PROPER DRAINAGE. SILT SACKS WILL BE EMPTIED ONCE A WEEK AND AFTER EVERY RAIN EVENT. SEDIMENT WILL BE REMOVED FROM AROUND BEAVER DAMS, DANDY SACKS AND SOCKS ONCE A WEEK AND AFTER EVERY RAIN EVENT.

DIVERSION DITCHES WILL BE CLEANED OUT IMMEDIATELY TO REMOVE SEDIMENT OR OBSTRUCTIONS FROM THE FLOW AREA. THE DIVERSION RIDGES WILL ALSO BE REPAIRED. SWALES MUST BE TEMPORARILY STABILIZED WITHIN 21 CALENDAR DAYS OF CEASE OF ANY PHASE OF ACTIVITY ASSOCIATED WITH A SWALE.

SEDIMENT WILL BE REMOVED FROM BEHIND THE SEDIMENT FENCE WHEN IT BECOMES HALF FILLED. THE SEDIMENT FENCE WILL BE REPAIRED AS NECESSARY TO MAINTAIN A BARRIER. STAKES MUST BE STEEL. STAKE SPACING WILL BE 6 FEET MAX. WITH THE USE OF EXTRA STRENGTH FABRIC, WITHOUT WIRE BACKING. STAKE SPACING WILL BE 8 FEET MAX. WHEN STANDARD STRENGTH FABRIC AND WIRE BACKING ARE USED. IF ROCK FILTERS ARE DESIGNED AT LOW POINTS IN THE SEDIMENT FENCE THE ROCK WILL BE REPAIRED OR REPLACED IF IT BECOMES HALF FULL OF SEDIMENT, NO LONGER DRAINS AS DESIGNED OR IS DAMAGED.

SEDIMENT WILL BE REMOVED FROM SEDIMENT TRAPS WHEN THE DESIGNED STORAGE CAPACITY HAS BEEN HALF FILLED WITH SEDIMENT. THE ROCK WILL BE CLEANED OR REPLACED WHEN THE SEDIMENT POOL NO LONGER DRAINS OR WHEN THE ROCK IS DISLODGED. BAFFLES WILL BE REPAIRED OR REPLACED IF THEY COLLAPSE, TEAR, DECOMPOSE OR BECOME INEFFECTIVE. THEY WILL BE REPLACED PROMPTLY. SEDIMENT WILL BE REMOVED WHEN DEPOSITS REACH HALF THE HEIGHT OF THE 1ST BAFFLE.

SEDIMENT WILL BE REMOVED FROM THE SEDIMENT BASIN WHEN THE DESIGN STORAGE CAPACITY HAS BEEN HALF FILLED WITH SEDIMENT. ROCK WILL BE CLEANED OR REPLACED WHEN THE SEDIMENT POOL NO LONGER DRAINS OR IF THE ROCK IS DISLODGED. BAFFLES WILL BE REPAIRED OR REPLACED IF THEY COLLAPSE, TEAR, DECOMPOSE OR BECOME INEFFECTIVE. THEY WILL BE REPLACED PROMPTLY. SEDIMENT WILL BE REMOVED FROM BAFFLES WHEN DEPOSITS REACH HALF THE HEIGHT OF THE 1ST BAFFLE. FLOATING SKIMMERS WILL BE INSPECTED WEEKLY AND WILL BE KEPT CLEAN.

ALL SEEDED AREAS WILL BE FERTILIZED, RESEEDED AS NECESSARY AND MULCHED ACCORDING TO SPECIFICATIONS IN THE VEGETATIVE PLAN TO MAINTAIN A VIGOROUS, DENSE VEGETATIVE COVER. ALL SLOPES WILL BE STABILIZED WITHIN 21 CALENDAR DAYS. ALL OTHER AREAS WILL BE STABILIZED WITHIN 15 WORKING DAYS.

FLOCCULANTS WILL BE USED TO ADDRESS TURBIDITY ISSUES. THE PUMPS, TANKS, HOSES AND INJECTION SYSTEMS WILL BE CHECKED FOR PROBLEMS OR TURBID DISCHARGES DAILY.

COMPOST FILTER SOCKS SHOULD BE INSPECTED REGULARLY, AS WELL AS AFTER EACH RAINFALL EVENT, TO ENSURE THAT THEY ARE INTACT AND THE AREA BEHIND THE SOCK IS NOT FILLED WITH SEDIMENT. IF THERE IS EXCESSIVE PONDING BEHIND THE FILTER SOCK OR ACCUMULATED SEDIMENTS REACH THE TOP OF THE SOCK, AN ADDITIONAL SOCK SHOULD BE ADDED ON TOP OR IN FRONT OF THE EXISTING FILTER SOCK IN THESE AREAS, WITHOUT DISTURBING THE SOIL OR ACCUMULATED SEDIMENT. IF THE FILTER SOCK WAS OVERTOPPED DURING A STORM EVENT, THE OPERATOR SHOULD CONSIDER INSTALLING AN ADDITIONAL FILTER SOCK ON TOP OF THE ORIGINAL, PLACING AN ADDITIONAL FILTER SOCK FURTHER UP THE SLOPE, OR USING AN ADDITIONAL BMP, SUCH AS A COMPOST BLANKET IN CONJUNCTION WITH THE SOCK(S).

STABILIZATION NOTES

1. ALL DISTURBED AREAS WILL BE STABILIZED WITHIN 15 WORKING DAYS OF CEASE OF ANY PHASE OF ACTIVITY AND SLOPES WITHIN 21 CALENDAR DAYS.

PERMANENT SEEDING SCHEDULE – MIXTURE 5CP

SPECIES	RATE (LB/ACRE)
CENTIPEDE GRASS	10-20

Seeding Dates
MARCH - JUNE

Soil Amendments
APPLY LIME AND FERTILIZER ACCORDING TO SOIL TESTS, OR APPLY 300 LB/ACRE 10-10-10 FERTILIZER.

Mulch
DO NOT MULCH.

Maintenance
FERTILIZE VERY SPARINGLY LB/ACRE NITROGEN IN SPRING WITH NO PHOSPHORUS. CENTIPEDE GRASS CANNOT TOLERATE HIGH PH OR EXCESS FERTILIZER.

TEMPORARY SEEDING-LATE WINTER/EARLY SPRING

WINTER AND EARLY SPRING

SPECIES	RATE (LB/ACRE)
Rye (GRAIN)	120
*ANNUAL LESPEDEZA (KOBE IN PIEDMONT AND COASTAL PLAIN, KOREAN IN MOUNTAINS)	50

*OMIT ANNUAL LESPEDEZA WHEN DURATION OF TEMPORARY COVER IS NOT TO EXTEND BEYOND JUNE.

SUMMER

SPECIES	RATE (LB/ACRE)
GERMAN MILLET	40

FALL

SPECIES	RATE (LB/ACRE)
RYE (GRAIN)	120

Seeding dates
COASTAL PLAIN - DEC.1-APR. 15 - LATE WINTER AND EARLY SPRING
APRIL 15 - AUG. 15 - SUMMER
AUG. 15 - DEC. 30 - FALL

Soil amendments
FOLLOW RECOMMENDATIONS OF SOIL TESTS OR APPLY 2,000 LB/ACRE GROUND AGRICULTURAL LIMESTONE AND 750 LB/ACRE 10-10-10 FERTILIZER.

Mulch
APPLY 4,000 LB/ACRE STRAW. ANCHOR STRAW BY TACKING WITH ASPHALT, NETTING OR A MULCH ANCHORING TOOL. A DISK WITH BLADES SET NEARLY STRAIGHT CAN BE USED AS A MULCH ANCHORING TOOL.

Maintenance
REFERTILIZE IF GROWTH IS NOT FULLY ADEQUATE. RESEED, REFERTILIZE AND MULCH IMMEDIATELY FOLLOWING EROSION OR OTHER DAMAGE.

GENERAL GRADING NOTES

1. REASONABLE CARE HAS BEEN EXERCISED IN SHOWING THE LOCATION OF EXISTING UTILITIES ON THE PLANS. THE EXACT LOCATION OF SUCH UTILITIES IS NOT KNOWN IN ALL CASES. THE CONTRACTOR SHALL EXPLORE THE AREA AHEAD OF THE DITCHING OPERATION BY OBSERVATIONS, ELECTRONIC DEVICES, HAND DIGGING AND BY PERSONAL CONTACT WITH THE UTILITY COMPANIES IN ORDER TO LOCATE EXISTING UTILITIES IN ADVANCE OF THE TRENCHING OPERATIONS SO AS TO AVOID AND PREVENT DAMAGE TO THE EXISTING UTILITIES. CONTRACTOR SHALL BE RESPONSIBLE FOR ALL COST RESULTING FROM ANY DAMAGE TO THE EXISTING UTILITY LINES INCLUDING BUT NOT LIMITED TO REPAIRS AND LOSS SERVICE REVENUE. CONTRACTOR SHALL ARRANGE FOR TEMPORARY SUPPORT OF EXISTING UTILITIES, SUCH AS POLES, CONDUITS, FIBER OPTIC CABLES, TELEPHONE CABLES, WATER LINES, ETC...
2. CONTRACTOR SHALL COMPLY WITH THE LATEST REVISIONS AND INTERPRETATIONS OF THE DEPARTMENT OF LABOR SAFETY AND HEALTH REGULATIONS FOR CONSTRUCTION PROMULGATED UNDER THE OCCUPATIONAL SAFETY AND HEALTH ACT.
3. CONTRACTOR SHALL PLAN AND CONSTRUCT WORK SO AS TO CAUSE MINIMUM INCONVENIENCE TO THE OWNER AND THE PUBLIC. THE CONTRACTOR SHALL PROVIDE, ERECT AND MAINTAIN AT ALL TIMES DURING THE PROGRESS OR TEMPORARY SUSPENSION OF WORK, SUITABLE BARRIERS, FENCES, SIGNS OR OTHER ADEQUATE PROTECTION, INCLUDING FLAG MEN AND WATCHMEN AS NECESSARY TO INSURE THE SAFETY OF THE PUBLIC AS WELL AS THOSE ENGAGED IN THE CONSTRUCTION WORK. CONSTRUCTION SIGNING SHALL BE IN ACCORDANCE WITH THE LATEST EDITION OF "CONSTRUCTION AND MAINTENANCE OPERATIONS SUPPLEMENT TO THE MANUAL ON UNIFORM TRAFFIC CONTROL DEVICES" BY THE NCDOT.
4. ALL MATERIAL CLEARED AND GRUBBED BY THE CONTRACTOR IN ORDER TO CONSTRUCT THE WORK, SUCH AS TREES, VEGETATION, FENCING, ETC... SHALL BECOME THE PROPERTY OF THE CONTRACTOR AND SHALL BE PROPERLY DISPOSED OF OFF-SITE OR BURNED IF PROPER PERMITS ARE RECEIVED.

SITE NOTES:

1. ANY DISCREPANCY IN THIS PLAN AND ACTUAL FIELD CONDITIONS SHALL BE REPORTED TO THE OWNER PRIOR TO START OF CONSTRUCTION. GENERAL CONTRACTOR SHALL BE RESPONSIBLE FOR VERIFICATION OF ALL SETBACKS, EASEMENTS AND DIMENSIONS SHOWN HEREON BEFORE BEGINNING CONSTRUCTION.
2. THE GENERAL CONTRACTOR SHALL CONTACT ALL OWNERS OF EASEMENTS, UTILITIES AND R.O.W.'S PUBLIC OR PRIVATE, PRIOR TO WORKING IN THESE AREAS.
3. CONTRACTOR SHALL MAINTAIN THE SITE IN A MANNER SO THAT WORKMEN AND PUBLIC SHALL BE PROTECTED FROM INJURY, AND ADJOINING PROPERTY PROTECTED FROM DAMAGE.
4. ACCESS TO UTILITIES, FIRE HYDRANTS, STREET LIGHTING, ETC., SHALL REMAIN UNDISTURBED, UNLESS COORDINATED WITH THE RESPECTIVE UTILITY.
5. DO NOT SCALE THIS DRAWING AS IT IS A REPRODUCTION AND SUBJECT TO DISTORTION.
6. THE GENERAL CONTRACTOR SHALL REMOVE ALL DEBRIS FROM THE SITE UPON COMPLETION OF THE PROJECT AND AT LEAST ONCE A WEEK DURING CONSTRUCTION.
7. THE GENERAL CONTRACTOR SHALL KEEP THE AREA OUTSIDE THE "CONSTRUCTION LIMITS" BROOM CLEAN AT ALL TIMES.
8. CONTRACTOR SHALL MAINTAIN AN "AS-BUILT" SET OF DRAWINGS TO RECORD THE EXACT LOCATION OF ALL PIPING PRIOR TO CONCEALMENT. DRAWINGS SHALL BE GIVEN TO THE OWNER UPON COMPLETION OF THE PROJECT WITH A COPY OF THE TRANSMITTAL LETTER TO THE ENGINEER.
9. IF DEPARTURES FROM THE SPECIFICATIONS OR DRAWINGS ARE DEEMED NECESSARY BY THE CONTRACTOR, DETAILS OF SUCH DEPARTURES AND REASONS THEREOF SHALL BE GIVEN TO THE OWNER FOR REVIEW, NO DEPARTURES FROM THE CONTRACT DOCUMENT SHALL BE MADE WITHOUT THE PERMISSION OF THE OWNER.
10. CONTRACTOR SHALL VERIFY LOCATION AND ELEVATION OF ALL UNDERGROUND UTILITIES. THE LOCATION OF ALL EXISTING UTILITIES ARE NOT NECESSARILY SHOWN ON PLANS AND WHERE SHOWN ARE ONLY APPROXIMATE. THE CONTRACTOR SHALL ON HIS INITIATIVE AND AT NO EXTRA COST HAVE LOCATED ALL UNDERGROUND LINES AND STRUCTURES AS NECESSARY. NO CLAIMS FOR DAMAGES OR EXTRA COMPENSATION SHALL ACCRUE TO THE CONTRACTOR FROM THE PRESENCE OF SUCH PIPE OTHER OBSTRUCTIONS OR FROM DELAY DUE TO REMOVAL OR REARRANGEMENT OF THE SAME. THE CONTRACTOR SHALL BE RESPONSIBLE FOR ANY DAMAGE TO UNDERGROUND STRUCTURES. CONTACT NORTH CAROLINA ONE CALL TOLL FREE 1-800-632-4949 AT LEAST 48 HOURS PRIOR TO CONSTRUCTION. THE CONTRACTOR IS RESPONSIBLE FOR CONTACTING ALL NON-SUBSCRIBING UTILITIES.
11. ALL PERMITS RELATIVE TO PROJECT MUST BE OBTAINED, PRIOR TO CONSTRUCTION
12. ALL CONSTRUCTION TO BE IN ACCORDANCE WITH PERMITS ISSUED AND APPLICABLE STATE, COUNTY, AND LOCAL CODES.
13. FOR BUILDING DIMENSIONS, SEE ARCHITECTURAL DRAWINGS.
14. ALL DIMENSIONS AND RADII ARE TO OUTSIDE FACE OF BUILDING OR TO FACE OF CURB UNLESS OTHERWISE NOTED.
15. THE CONTRACTOR SHALL OBTAIN AND PAY FOR ALL INSPECTIONS, CERTIFICATIONS, EQUIPMENT, ETC., THAT MAY BE REQUIRED.
16. THE ENGINEER AND/OR OWNER DISCLAIM ANY ROLE IN THE CONSTRUCTION MEANS AND METHODS ASSOCIATED WITH THE PROJECT AS SET FORTH IN THESE PLANS.

GENERAL STORM SEWER NOTES

1. ALL STORM SEWERS SHALL BE CONSTRUCTED IN ACCORDANCE WITH THE CITY OF WILMINGTON AND THE STATE OF NORTH CAROLINA REQUIREMENTS AS SPECIFIED ON THE DRAWINGS AND IN THE PROJECT SPECIFICATIONS.
2. BEDDING FOR ALL STORM SEWER PIPE SHALL BE AS SPECIFIED ON THE DRAWINGS, PROJECT SPECIFICATIONS, AND MANUFACTURER SPECIFICATIONS.
3. ALL STORM SEWER PIPES TO BE HDPE ADS N-12 OR EQUIVALENT, UNLESS OTHERWISE SPECIFIED.
4. ALL STORM SEWER PIPES SHOWN AS RCP ON THE PLANS SHALL BE REINFORCED CONCRETE PIPE CONFORMING TO ASTM C-76, UNLESS INDICATED OTHERWISE ON PLANS.

GROUND STABILIZATION

SITE AREA DESCRIPTION	STABILIZATION TIME FRAME	STABILIZATION TIME FRAME EXCEPTIONS
PERIMETER DIKES, SWALES, DITCHES AND SLOPES	7 DAYS	NONE
HIGH QUALITY WATER (HQW) ZONES	7 DAYS	NONE
SLOPES STEEPER THAN 3:1	7 DAYS	IF SLOPES ARE 10' OR LESS IN LENGTH AND ARE NOT STEEPER THAN 2:1, 14 DAYS ARE ALLOWED.
SLOPES 3:1 OR FLATTER	14 DAYS	7-DAYS FOR SLOPES GREATER THAN 50 FEET IN LENGTH
ALL OTHER AREAS WITH SLOPES FLATTER THAN 4:1	14 DAYS	NONE (EXCEPT FOR PERIMETERS AND HQW ZONES)

EXISTING UTILITY NOTES

1. IT IS THE RESPONSIBILITY OF THE GENERAL CONTRACTOR TO VERIFY THE ACTUAL LOCATION AND AVAILABILITY OF ALL EXISTING AND PROPOSED UTILITIES IN THE FIELD PRIOR TO GROUND BREAKING.
2. EXISTING UTILITIES AND STRUCTURES SHOWN, BOTH UNDERGROUND AND ABOVE GROUND, ARE BASED ON A FIELD SURVEY AND THE BEST AVAILABLE RECORD DRAWINGS. THE CONTRACTOR SHALL FIELD VERIFY FIELD CONDITIONS PRIOR TO BEGINNING RELATED CONSTRUCTION. ANY DISCREPANCIES SHALL BE REPORTED TO THE OWNER'S REPRESENTATIVE IMMEDIATELY.

UTILITY CONTACTS:

1. CONTACT THE NORTH CAROLINA ONE CALL CENTER PRIOR TO DOING AND DIGGING. 1-800-632-4949

NOTICE REQUIRED

ALL EXISTING UNDERGROUND UTILITIES SHALL BE PHYSICALLY LOCATED BY CONTRACTOR PRIOR TO THE BEGINNING OF ANY CONSTRUCTION IN THE VICINITY OF SAID UTILITIES.

CONTRACTORS SHALL NOTIFY OPERATORS WHO MAINTAIN UNDERGROUND UTILITY LINES IN THE AREA OF PROPOSED EXCAVATION AT LEAST TWO WORKING DAYS, BUT NOT MORE THAN TEN WORKING DAYS PRIOR TO ANY EXCAVATION OR DEMOLITION.

CONTACT "CAROLINA ONE CALL" AT
1-800-632-4949

EMERGENCY DIAL 911 POLICE - FIRE - RESCUE

Approved Construction Plan

Name Date

Planning_____

Traffic_____

Fire_____

For each open utility cut of City streets, a $325 permit shall be required from the City prior to occupancy and/or project acceptance.

CITY OF WILMINGTON NORTH CAROLINA
Public Services • Engineering Division
APPROVED STORMWATER MANAGEMENT PLAN
Date:_____ Permit #_____
Signed: _____

NORTH CAROLINA PROFESSIONAL SEAL 031315 ENGINEER GARRY S. PAPE
06/09/2016

No.	Revision	Date	By

Designer GSP	Scale
Drawn By GSP	Date February 2016
License # P-0718	Job No. 2016-0002

OLEANDER STORAGE II

Wilmington New Hanover County North Carolina

GENERAL NOTES

PREPARED FOR:
Penton Storage, LLC
6105 Oleander Drive
Suite 201
Wilmington, NC 28403

GSP CONSULTING, PLLC
ENGINEERING
6626 Gordon Road Unit C Wilmington, North Carolina 28411 tel: 910-442-7870 fax: 910-799-6659

Sheet No.
C-1

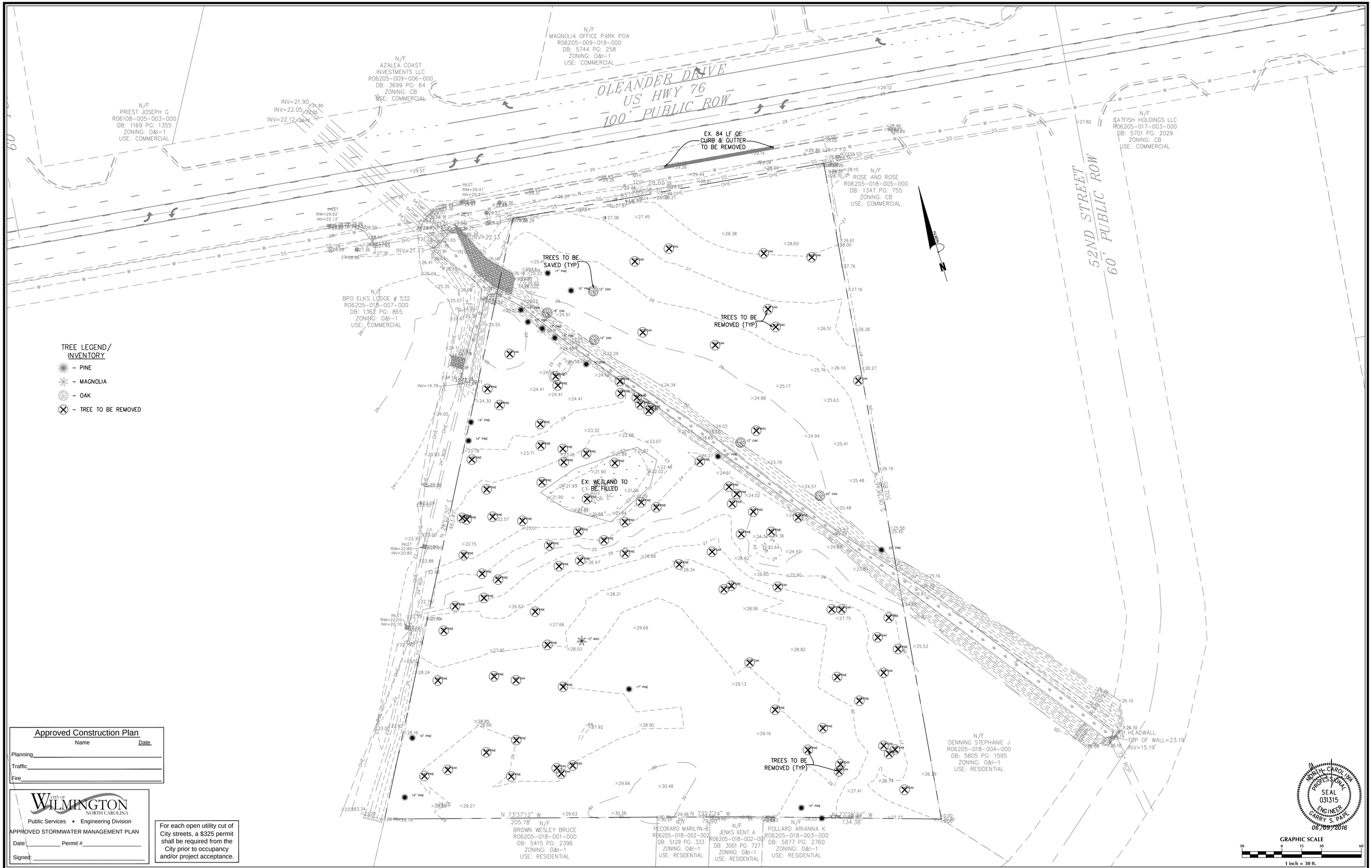

TREE LEGEND/ INVENTORY

- PINE
- MAGNOLIA
- OAK
- TREE TO BE REMOVED

Approved Construction Plan

Name Date

Planning_____

Traffic_____

Fire_____

CITY OF WILMINGTON NORTH CAROLINA

Public Services • Engineering Division

APPROVED STORMWATER MANAGEMENT PLAN

Date:_____ Permit #_____

Signed: _____

For each open utility cut of City streets, a $325 permit shall be required from the City prior to occupancy and/or project acceptance.

NORTH CAROLINA PROFESSIONAL SEAL 031315 ENGINEER CARRY S. PAPE

06/09/2016

GRAPHIC SCALE

30 0 15 30 60

1 inch = 30 ft.

No.	Revision	Date	By

Designer GSP	Scale 1" = 30'
Drawn By GSP	Date February 2016
License # P-0718	Job No. 2016-0002

OLEANDER STORAGE II

Wilmington New Hanover County North Carolina

EXISTING CONDITIONS

PREPARED FOR:
Penton Storage, LLC
6105 Oleander Drive
Suite 201
Wilmington, NC 28403

GSP CONSULTING, PLLC
ENGINEERING
6626 Gordon Road Unit C Wilmington, North Carolina 28411 tel: 910-442-7870 fax: 910-799-6659

Sheet No. C-2

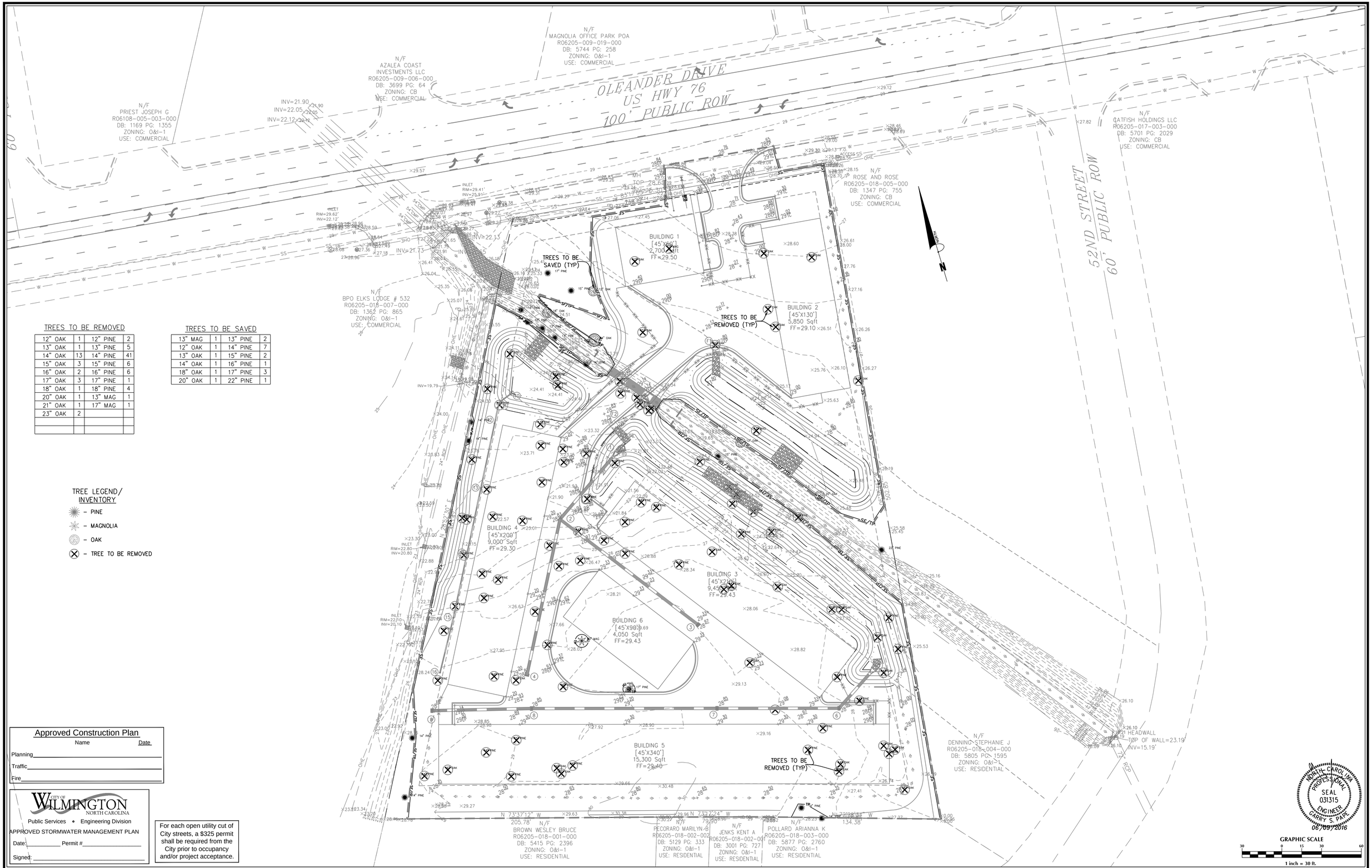

TREES TO BE REMOVED

12" OAK	1	12" PINE	2
13" OAK	1	13" PINE	5
14" OAK	13	14" PINE	41
15" OAK	3	15" PINE	6
16" OAK	2	16" PINE	6
17" OAK	3	17" PINE	1
18" OAK	1	18" PINE	4
20" OAK	1	13" MAG	1
21" OAK	1	17" MAG	1
23" OAK	2		

TREES TO BE SAVED

13" MAG	1	13" PINE	2
12" OAK	1	14" PINE	7
13" OAK	1	15" PINE	2
14" OAK	1	16" PINE	1
18" OAK	1	17" PINE	3
20" OAK	1	22" PINE	1

TREE LEGEND/
INVENTORY

- PINE
- MAGNOLIA
- OAK
- TREE TO BE REMOVED

Approved Construction Plan

	Name	Date
Planning		
Traffic		
Fire		

CITY OF WILMINGTON NORTH CAROLINA
Public Services • Engineering Division
APPROVED STORMWATER MANAGEMENT PLAN
Date: _____ Permit #_____
Signed: _____

For each open utility cut of City streets, a $325 permit shall be required from the City prior to occupancy and/or project acceptance.

NORTH CAROLINA PROFESSIONAL SEAL 031315 ENGINEER CARRY S. PAPE
06/09/2016

GRAPHIC SCALE
30 0 15 30 60
1 inch = 30 ft.

No.	Revision	Date	By

Designer: GSP	Scale: 1" = 30'
Drawn By: GSP	Date: February 2016
License #: P-0718	Job No.: 2016-0002

OLEANDER STORAGE II

Wilmington New Hanover County North Carolina

SITE INVENTORY PLAN

PREPARED FOR:
Penton Storage, LLC
6105 Oleander Drive
Suite 201
Wilmington, NC 28403

GSP CONSULTING, PLLC
ENGINEERING
6626 Gordon Road Unit C Wilmington, North Carolina 28411 tel: 910-442-7870 fax: 910-799-6659

Sheet No.
C-2.1

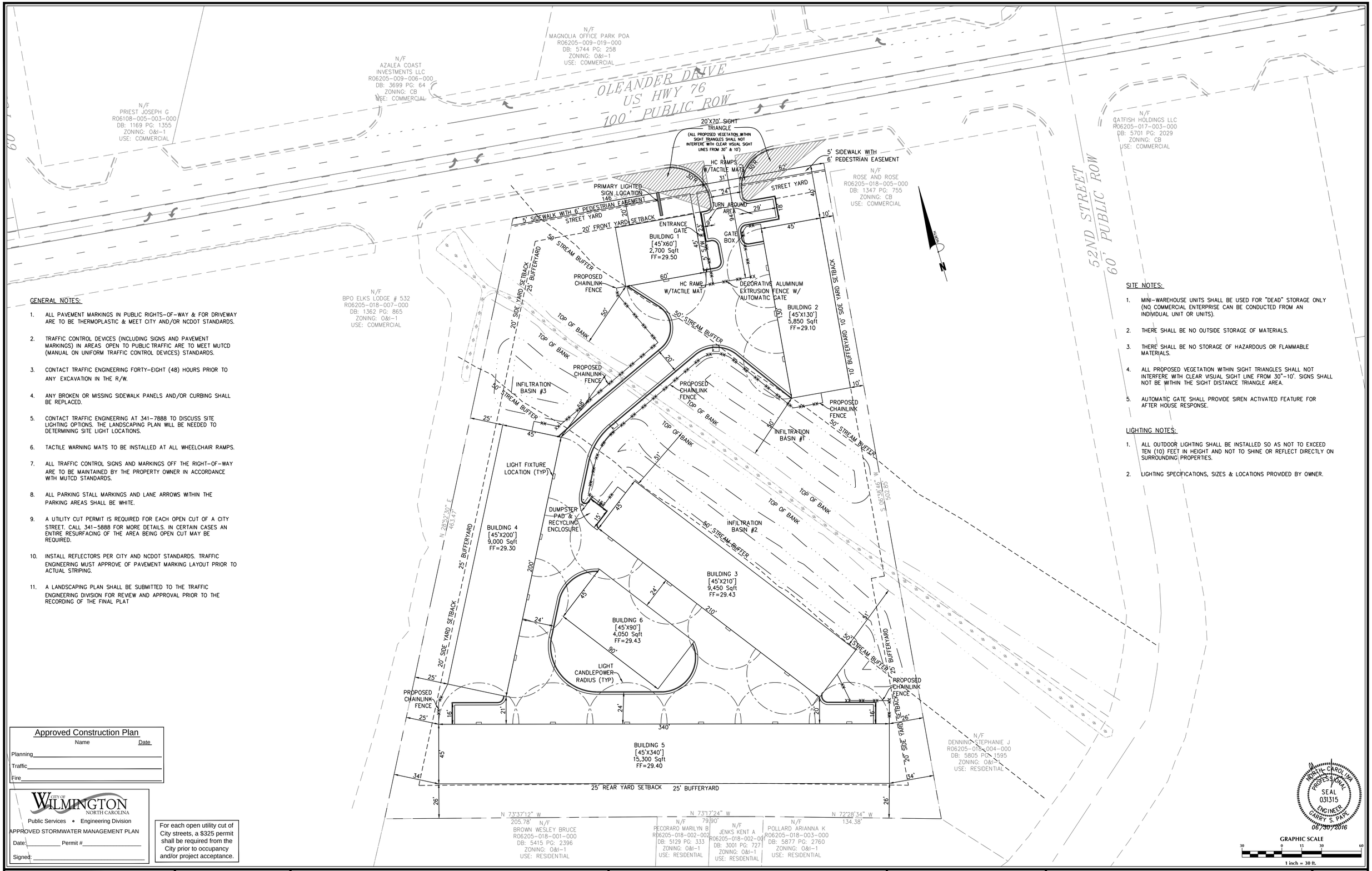

GENERAL NOTES:

1. ALL PAVEMENT MARKINGS IN PUBLIC RIGHTS-OF-WAY & FOR DRIVEWAY ARE TO BE THERMOPLASTIC & MEET CITY AND/OR NCDOT STANDARDS.
2. TRAFFIC CONTROL DEVICES (INCLUDING SIGNS AND PAVEMENT MARKINGS) IN AREAS OPEN TO PUBLIC TRAFFIC ARE TO MEET MUTCD (MANUAL ON UNIFORM TRAFFIC CONTROL DEVICES) STANDARDS.
3. CONTACT TRAFFIC ENGINEERING FORTY-EIGHT (48) HOURS PRIOR TO ANY EXCAVATION IN THE R/W.
4. ANY BROKEN OR MISSING SIDEWALK PANELS AND/OR CURBING SHALL BE REPLACED.
5. CONTACT TRAFFIC ENGINEERING AT 341-7888 TO DISCUSS SITE LIGHTING OPTIONS. THE LANDSCAPING PLAN WILL BE NEEDED TO DETERMINING SITE LIGHT LOCATIONS.
6. TACTILE WARNING MATS TO BE INSTALLED AT ALL WHEELCHAIR RAMPS.
7. ALL TRAFFIC CONTROL SIGNS AND MARKINGS OFF THE RIGHT-OF-WAY ARE TO BE MAINTAINED BY THE PROPERTY OWNER IN ACCORDANCE WITH MUTCD STANDARDS.
8. ALL PARKING STALL MARKINGS AND LANE ARROWS WITHIN THE PARKING AREAS SHALL BE WHITE.
9. A UTILITY CUT PERMIT IS REQUIRED FOR EACH OPEN CUT OF A CITY STREET. CALL 341-5888 FOR MORE DETAILS. IN CERTAIN CASES AN ENTIRE RESURFACING OF THE AREA BEING OPEN CUT MAY BE REQUIRED.
10. INSTALL REFLECTORS PER CITY AND NCDOT STANDARDS. TRAFFIC ENGINEERING MUST APPROVE OF PAVEMENT MARKING LAYOUT PRIOR TO ACTUAL STRIPING.
11. A LANDSCAPING PLAN SHALL BE SUBMITTED TO THE TRAFFIC ENGINEERING DIVISION FOR REVIEW AND APPROVAL PRIOR TO THE RECORDING OF THE FINAL PLAT

SITE NOTES:

1. MINI-WAREHOUSE UNITS SHALL BE USED FOR "DEAD" STORAGE ONLY (NO COMMERCIAL ENTERPRISE CAN BE CONDUCTED FROM AN INDIVIDUAL UNIT OR UNITS).
2. THERE SHALL BE NO OUTSIDE STORAGE OF MATERIALS.
3. THERE SHALL BE NO STORAGE OF HAZARDOUS OR FLAMMABLE MATERIALS.
4. ALL PROPOSED VEGETATION WITHIN SIGHT TRIANGLES SHALL NOT INTERFERE WITH CLEAR VISUAL SIGHT LINE FROM 30"-10'. SIGNS SHALL NOT BE WITHIN THE SIGHT DISTANCE TRIANGLE AREA.
5. AUTOMATIC GATE SHALL PROVIDE SIREN ACTIVATED FEATURE FOR AFTER HOUSE RESPONSE.

LIGHTING NOTES:

1. ALL OUTDOOR LIGHTING SHALL BE INSTALLED SO AS NOT TO EXCEED TEN (10) FEET IN HEIGHT AND NOT TO SHINE OR REFLECT DIRECTLY ON SURROUNDING PROPERTIES.
2. LIGHTING SPECIFICATIONS, SIZES & LOCATIONS PROVIDED BY OWNER.

Approved Construction Plan

Name	Date
Planning	
Traffic	
Fire	

CITY OF WILMINGTON NORTH CAROLINA
Public Services • Engineering Division
APPROVED STORMWATER MANAGEMENT PLAN
Date: _____ Permit #_____
Signed: _____

For each open utility cut of City streets, a $325 permit shall be required from the City prior to occupancy and/or project acceptance.

NORTH CAROLINA PROFESSIONAL SEAL 031315 ENGINEER CARRY S. PATE
08/30/2016

GRAPHIC SCALE
30 0 15 30 60
1 inch = 30 ft.

No.	Revision	Date	By

Designer GSP	Scale 1" = 30'
Drawn By GSP	Date February 2016
License # P-0718	Job No. 2016-0002

OLEANDER STORAGE II

Wilmington New Hanover County North Carolina

SITE PLAN

PREPARED FOR:
Penton Storage, LLC
6105 Oleander Drive
Suite 201
Wilmington, NC 28403

GSP CONSULTING, PLLC
ENGINEERING
6626 Gordon Road Unit C Wilmington, North Carolina 28411 tel: 910-442-7870 fax: 910-799-6659

Sheet No. **C-3**

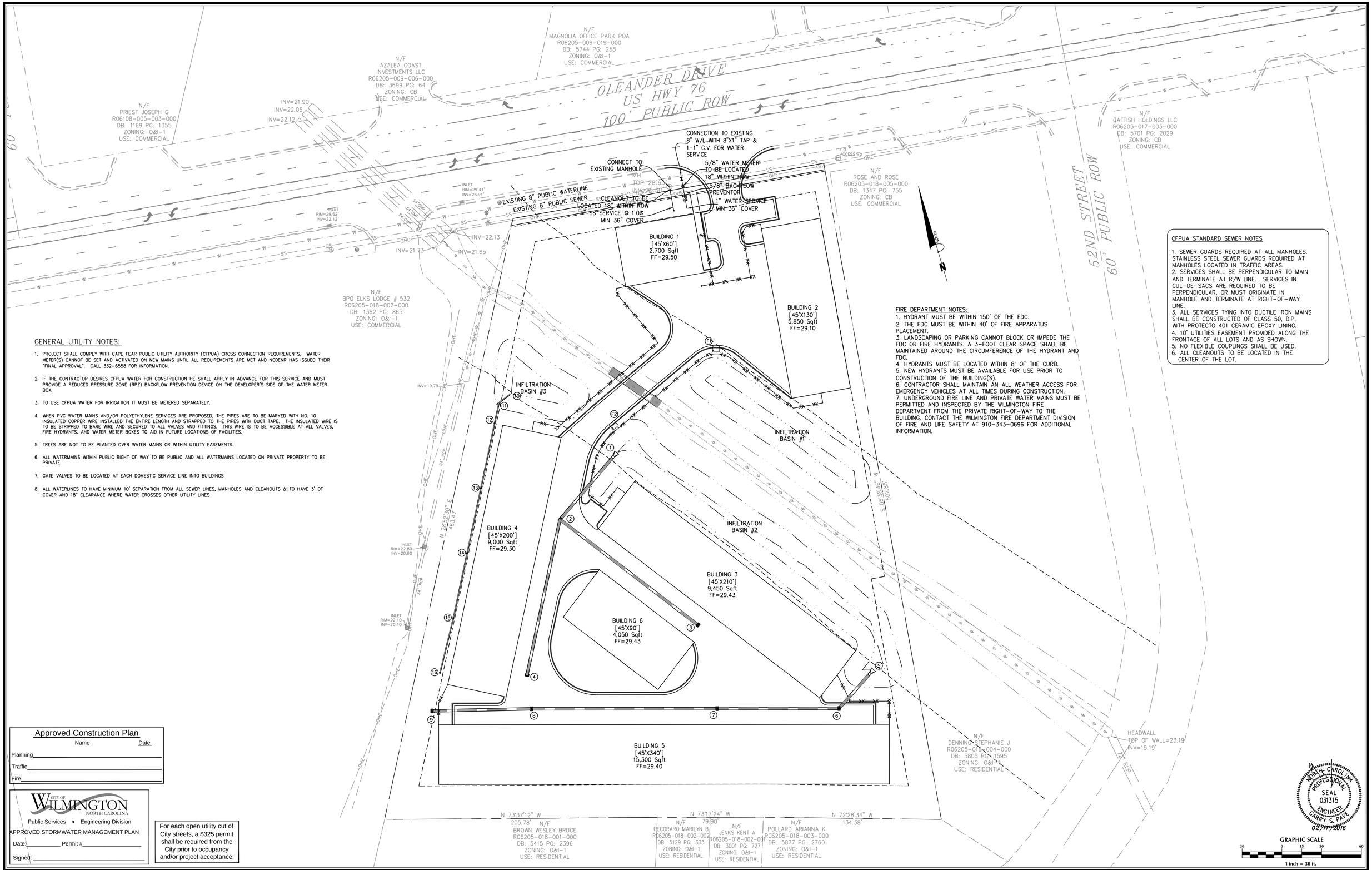

GENERAL UTILITY NOTES:

1. PROJECT SHALL COMPLY WITH CAPE FEAR PUBLIC UTILITY AUTHORITY (CFPUA) CROSS CONNECTION REQUIREMENTS. WATER METER(S) CANNOT BE SET AND ACTIVATED ON NEW MAINS UNTIL ALL REQUIREMENTS ARE MET AND NCDENR HAS ISSUED THEIR "FINAL APPROVAL". CALL 332-6558 FOR INFORMATION.
2. IF THE CONTRACTOR DESIRES CFPUA WATER FOR CONSTRUCTION HE SHALL APPLY IN ADVANCE FOR THIS SERVICE AND MUST PROVIDE A REDUCED PRESSURE ZONE (RPZ) BACKFLOW PREVENTION DEVICE ON THE DEVELOPER'S SIDE OF THE WATER METER BOX.
3. TO USE CFPUA WATER FOR IRRIGATION IT MUST BE METERED SEPARATELY.
4. WHEN PVC WATER MAINS AND/OR POLYETHYLENE SERVICES ARE PROPOSED, THE PIPES ARE TO BE MARKED WITH NO. 10 INSULATED COPPER WIRE INSTALLED THE ENTIRE LENGTH AND STRAPPED TO THE PIPES WITH DUCT TAPE. THE INSULATED WIRE IS TO BE STRIPPED TO BARE WIRE AND SECURED TO ALL VALVES AND FITTINGS. THIS WIRE IS TO BE ACCESSIBLE AT ALL VALVES, FIRE HYDRANTS, AND WATER METER BOXES TO AID IN FUTURE LOCATIONS OF FACILITIES.
5. TREES ARE NOT TO BE PLANTED OVER WATER MAINS OR WITHIN UTILITY EASEMENTS.
6. ALL WATERMAINS WITHIN PUBLIC RIGHT OF WAY TO BE PUBLIC AND ALL WATERMAINS LOCATED ON PRIVATE PROPERTY TO BE PRIVATE.
7. GATE VALVES TO BE LOCATED AT EACH DOMESTIC SERVICE LINE INTO BUILDINGS
8. ALL WATERLINES TO HAVE MINIMUM 10' SEPARATION FROM ALL SEWER LINES, MANHOLES AND CLEANOUTS & TO HAVE 3' OF COVER AND 18" CLEARANCE WHERE WATER CROSSES OTHER UTILITY LINES

FIRE DEPARTMENT NOTES:

1. HYDRANT MUST BE WITHIN 150' OF THE FDC.
2. THE FDC MUST BE WITHIN 40' OF FIRE APPARATUS PLACEMENT.
3. LANDSCAPING OR PARKING CANNOT BLOCK OR IMPEDE THE FDC OR FIRE HYDRANTS. A 3-FOOT CLEAR SPACE SHALL BE MAINTAINED AROUND THE CIRCUMFERENCE OF THE HYDRANT AND FDC.
4. HYDRANTS MUST BE LOCATED WITHIN 8' OF THE CURB.
5. NEW HYDRANTS MUST BE AVAILABLE FOR USE PRIOR TO CONSTRUCTION OF THE BUILDING(S).
6. CONTRACTOR SHALL MAINTAIN AN ALL WEATHER ACCESS FOR EMERGENCY VEHICLES AT ALL TIMES DURING CONSTRUCTION.
7. UNDERGROUND FIRE LINE AND PRIVATE WATER MAINS MUST BE PERMITTED AND INSPECTED BY THE WILMINGTON FIRE DEPARTMENT FROM THE PRIVATE RIGHT-OF-WAY TO THE BUILDING. CONTACT THE WILMINGTON FIRE DEPARTMENT DIVISION OF FIRE AND LIFE SAFETY AT 910-343-0696 FOR ADDITIONAL INFORMATION.

CFPUA STANDARD SEWER NOTES

1. SEWER GUARDS REQUIRED AT ALL MANHOLES. STAINLESS STEEL SEWER GUARDS REQUIRED AT MANHOLES LOCATED IN TRAFFIC AREAS.
2. SERVICES SHALL BE PERPENDICULAR TO MAIN AND TERMINATE AT R/W LINE. SERVICES IN CUL-DE-SACS ARE REQUIRED TO BE PERPENDICULAR, OR MUST ORIGINATE IN MANHOLE AND TERMINATE AT RIGHT-OF-WAY LINE.
3. ALL SERVICES TYING INTO DUCTILE IRON MAINS SHALL BE CONSTRUCTED OF CLASS 50, DIP, WITH PROTECTO 401 CERAMIC EPOXY LINING.
4. 10' UTILITIES EASEMENT PROVIDED ALONG THE FRONTAGE OF ALL LOTS AND AS SHOWN.
5. NO FLEXIBLE COUPLINGS SHALL BE USED.
6. ALL CLEANOUTS TO BE LOCATED IN THE CENTER OF THE LOT.

Approved Construction Plan

Name Date

Planning_____

Traffic_____

Fire_____

CITY OF WILMINGTON NORTH CAROLINA

Public Services • Engineering Division

APPROVED STORMWATER MANAGEMENT PLAN

Date:_____ Permit #_____

Signed: _____

For each open utility cut of City streets, a $325 permit shall be required from the City prior to occupancy and/or project acceptance.

NORTH CAROLINA PROFESSIONAL SEAL 031315 ENGINEER CARRY S. PAPE

02/11/2016

GRAPHIC SCALE

30 0 15 30 60

1 inch = 30 ft.

No.	Revision	Date	By

Designer: GSP	Scale: 1" = 30'
Drawn By: GSP	Date: February 2016
License #: P-0718	Job No.: 2016-0002

OLEANDER STORAGE II

Wilmington New Hanover County North Carolina

UTILITY PLAN

PREPARED FOR:
Penton Storage, LLC
6105 Oleander Drive
Suite 201
Wilmington, NC 28403

GSP CONSULTING, PLLC
ENGINEERING
6626 Gordon Road Unit C Wilmington, North Carolina 28411 tel: 910-442-7870 fax: 910-799-6659

Sheet No. **C-4**

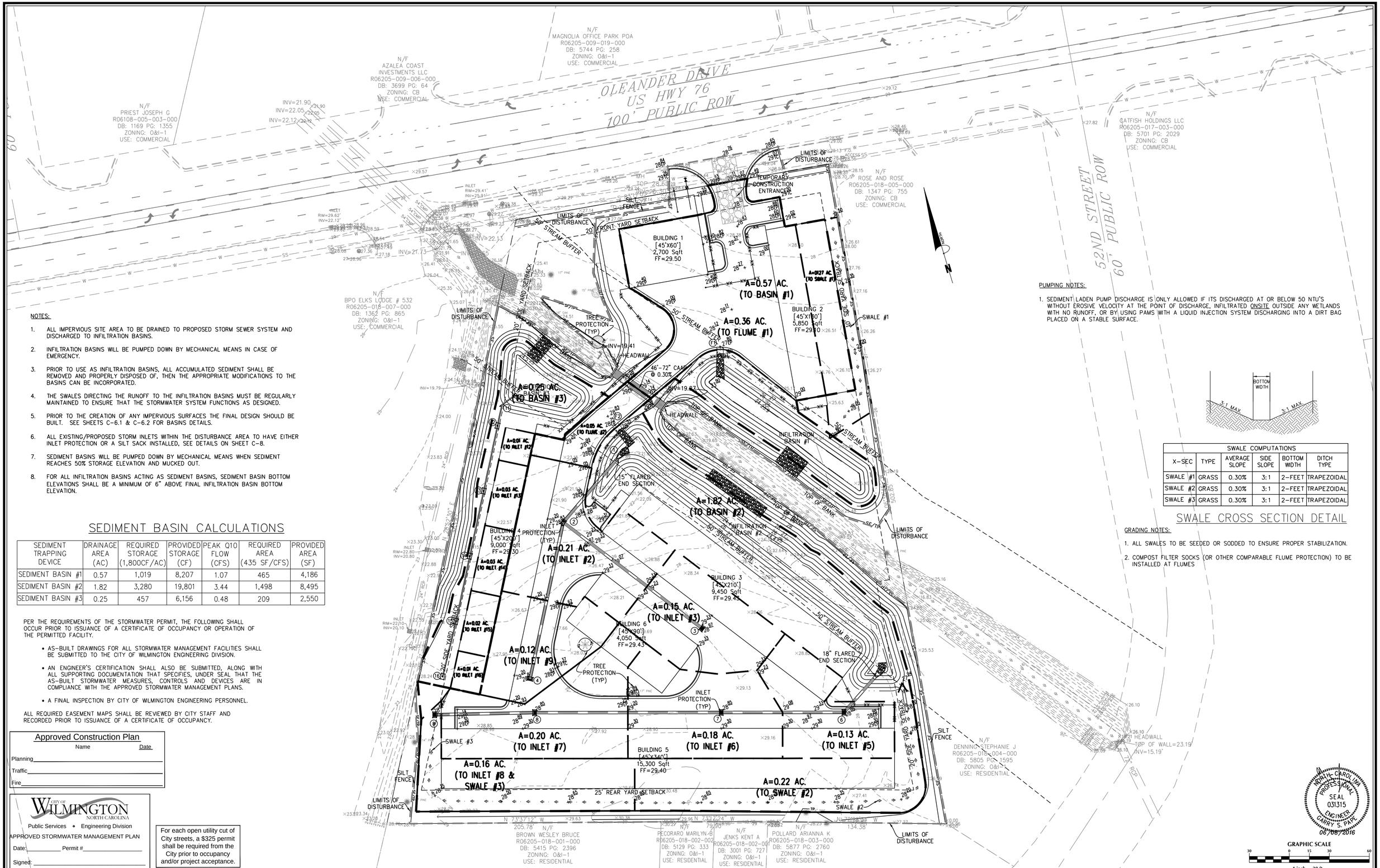

NOTES:

1. ALL IMPERVIOUS SITE AREA TO BE DRAINED TO PROPOSED STORM SEWER SYSTEM AND DISCHARGED TO INFILTRATION BASINS.
2. INFILTRATION BASINS WILL BE PUMPED DOWN BY MECHANICAL MEANS IN CASE OF EMERGENCY.
3. PRIOR TO USE AS INFILTRATION BASINS, ALL ACCUMULATED SEDIMENT SHALL BE REMOVED AND PROPERLY DISPOSED OF, THEN THE APPROPRIATE MODIFICATIONS TO THE BASINS CAN BE INCORPORATED.
4. THE SWALES DIRECTING THE RUNOFF TO THE INFILTRATION BASINS MUST BE REGULARLY MAINTAINED TO ENSURE THAT THE STORMWATER SYSTEM FUNCTIONS AS DESIGNED.
5. PRIOR TO THE CREATION OF ANY IMPERVIOUS SURFACES THE FINAL DESIGN SHOULD BE BUILT. SEE SHEETS C-6.1 & C-6.2 FOR BASINS DETAILS.
6. ALL EXISTING/PROPOSED STORM INLETS WITHIN THE DISTURBANCE AREA TO HAVE EITHER INLET PROTECTION OR A SILT SACK INSTALLED, SEE DETAILS ON SHEET C-8.
7. SEDIMENT BASINS WILL BE PUMPED DOWN BY MECHANICAL MEANS WHEN SEDIMENT REACHES 50% STORAGE ELEVATION AND MUCKED OUT.
8. FOR ALL INFILTRATION BASINS ACTING AS SEDIMENT BASINS, SEDIMENT BASIN BOTTOM ELEVATIONS SHALL BE A MINIMUM OF 6" ABOVE FINAL INFILTRATION BASIN BOTTOM ELEVATION.

SEDIMENT BASIN CALCULATIONS

SEDIMENT TRAPPING DEVICE	DRAINAGE AREA (AC)	REQUIRED STORAGE (1,800CF/AC)	PROVIDED STORAGE (CF)	PEAK Q10 FLOW (CFS)	REQUIRED AREA (435 SF/CFS)	PROVIDED AREA (SF)
SEDIMENT BASIN #1	0.57	1,019	8,207	1.07	465	4,186
SEDIMENT BASIN #2	1.82	3,280	19,801	3.44	1,498	8,495
SEDIMENT BASIN #3	0.25	457	6,156	0.48	209	2,550

PER THE REQUIREMENTS OF THE STORMWATER PERMIT, THE FOLLOWING SHALL OCCUR PRIOR TO ISSUANCE OF A CERTIFICATE OF OCCUPANCY OR OPERATION OF THE PERMITTED FACILITY.

- AS-BUILT DRAWINGS FOR ALL STORMWATER MANAGEMENT FACILITIES SHALL BE SUBMITTED TO THE CITY OF WILMINGTON ENGINEERING DIVISION.
- AN ENGINEER'S CERTIFICATION SHALL ALSO BE SUBMITTED, ALONG WITH ALL SUPPORTING DOCUMENTATION THAT SPECIFIES, UNDER SEAL THAT THE AS-BUILT STORMWATER MEASURES, CONTROLS AND DEVICES ARE IN COMPLIANCE WITH THE APPROVED STORMWATER MANAGEMENT PLANS.
- A FINAL INSPECTION BY CITY OF WILMINGTON ENGINEERING PERSONNEL.

ALL REQUIRED EASEMENT MAPS SHALL BE REVIEWED BY CITY STAFF AND RECORDED PRIOR TO ISSUANCE OF A CERTIFICATE OF OCCUPANCY.

Approved Construction Plan

	Name	Date
Planning		
Traffic		
Fire		

CITY OF WILMINGTON NORTH CAROLINA

Public Services • Engineering Division

APPROVED STORMWATER MANAGEMENT PLAN

Date: _____ Permit #_____

Signed: _____

For each open utility cut of City streets, a $325 permit shall be required from the City prior to occupancy and/or project acceptance.

PUMPING NOTES:

1. SEDIMENT LADEN PUMP DISCHARGE IS ONLY ALLOWED IF ITS DISCHARGED AT OR BELOW 50 NTU'S WITHOUT EROSIVE VELOCITY AT THE POINT OF DISCHARGE, INFILTRATED ONSITE OUTSIDE ANY WETLANDS WITH NO RUNOFF, OR BY USING PAMS WITH A LIQUID INJECTION SYSTEM DISCHARGING INTO A DIRT BAG PLACED ON A STABLE SURFACE.

SWALE COMPUTATIONS					
X-SEC	TYPE	AVERAGE SLOPE	SIDE SLOPE	BOTTOM WIDTH	DITCH TYPE
SWALE #1	GRASS	0.30%	3:1	2-FEET	TRAPEZOIDAL
SWALE #2	GRASS	0.30%	3:1	2-FEET	TRAPEZOIDAL
SWALE #3	GRASS	0.30%	3:1	2-FEET	TRAPEZOIDAL

SWALE CROSS SECTION DETAIL

GRADING NOTES:

1. ALL SWALES TO BE SEEDED OR SODDED TO ENSURE PROPER STABILIZATION.
2. COMPOST FILTER SOCKS (OR OTHER COMPARABLE FLUME PROTECTION) TO BE INSTALLED AT FLUMES

NORTH CAROLINA PROFESSIONAL SEAL 031315 ENGINEER CARRY S. PAPE
06/08/2016

GRAPHIC SCALE
30 0 15 30 60
1 inch = 30 ft.

No.	Revision	Date	By

Designer: GSP	Scale: 1" = 30'
Drawn By: GSP	Date: February 2016
License #: P-0718	Job No.: 2016-0002

OLEANDER STORAGE II

Wilmington — New Hanover County — North Carolina

GRADING, DRAINAGE & EROSION & SEDIMENT CONTROL PLAN

PREPARED FOR:
Penton Storage, LLC
6105 Oleander Drive
Suite 201
Wilmington, NC 28403

GSP CONSULTING, PLLC
ENGINEERING
6626 Gordon Road Unit C Wilmington, North Carolina 28411 tel: 910-442-7870 fax: 910-799-6659

Sheet No. C-5

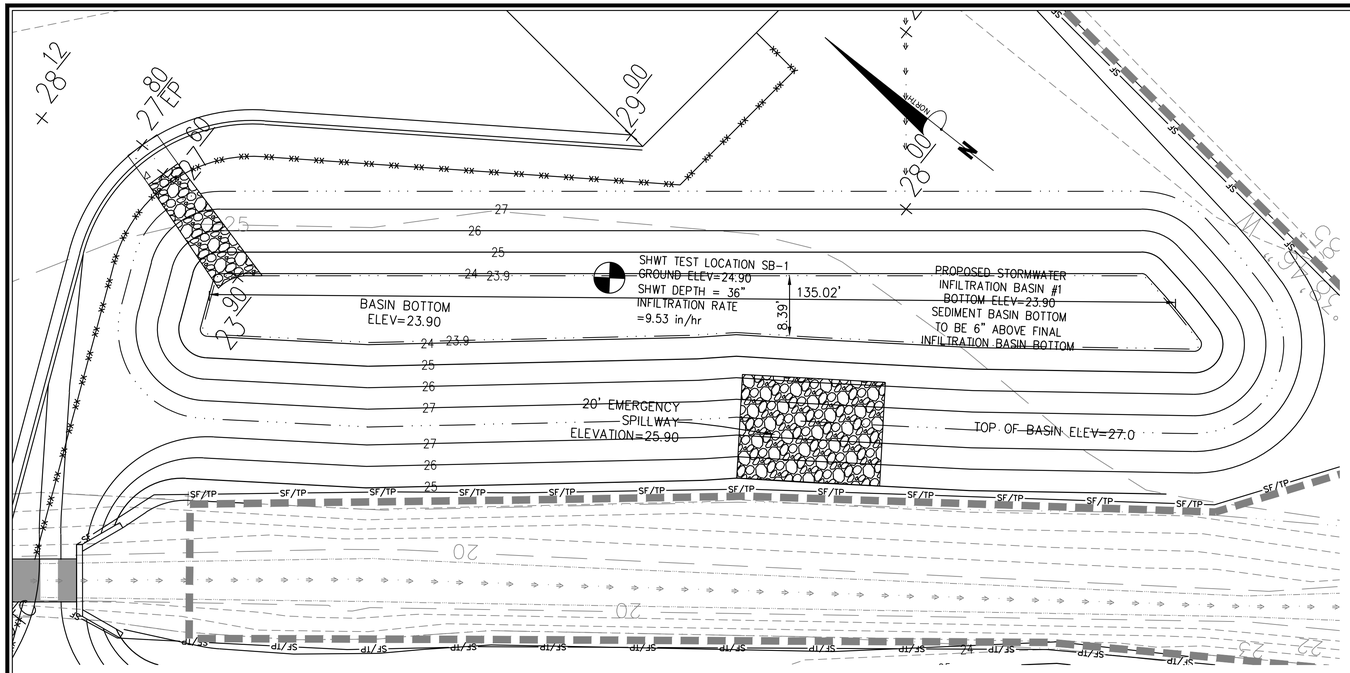

INFILTRATION BASIN #1

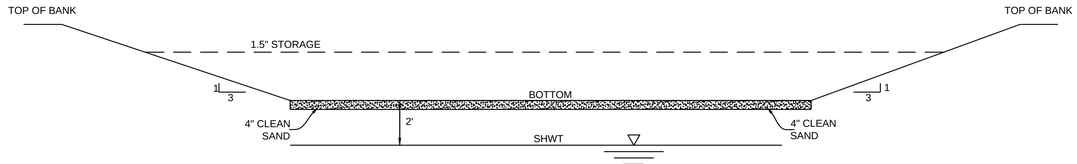

INFILTRATION BASIN	GROUND ELEVATION	SHWT DEPTH	SHWT ELEVATION	INFILTRATION RATES (in/hr)	BASIN BOTTOM ELEVATION	BASIN DEPTH (FT)	1.5" STORAGE ELEVATION	1.5" STORAGE VOLUME REQ. (CF)	1.5" STORAGE VOLUME PROV. (CF)	EMERGENCY SPILLWAY ELEVATION	EMERGENCY SPILLWAY WIDTH (FT)	50-YEAR ELEVATION	TOP OF BANK ELEVATION
BASIN #1	24.90	36"	21.90	9.53	23.90	3.1	25.15	2,186	2,228	25.90	20	26.06	27.00
BASIN #2	25.40	36"	22.40	10.00	24.40	3.6	26.05	6,482	6,503	27.71	50	27.90	28.40
BASIN #3	24.50	24"	22.50	6.54	24.50	3.5	25.05	575	634	26.05	10	26.17	28.00

INFILTRATION BASIN CROSS-SECTION
N.T.S.

EMERGENCY SPILLWAY
N.T.S.

NOTES:

1. REFER TO PROVIDED TABLE FOR SEASONAL HIGH WATER TABLE DETERMINATIONS & INFILTRATION RATES.
2. ALL IMPERVIOUS SITE AREA TO BE DRAINED TO PROPOSED STORM SEWER SYSTEM AND DISCHARGED TO INFILTRATION BASINS.
3. BASIN WILL BE PUMPED DOWN BY MECHANICAL MEANS IN CASE OF EMERGENCY.
4. PRIOR TO USE AS INFILTRATION BASINS, ALL ACCUMULATED SEDIMENT SHALL BE REMOVED AND PROPERLY DISPOSED OF, THEN THE APPROPRIATE MODIFICATIONS TO THE BASINS CAN BE INCORPORATED.
5. THE REQUIREMENTS FOR A BYPASS SYSTEM, VEGETATED FILTER STRIP AND ADDITIONAL STORAGE VOLUME FOR ALL BASINS ARE BEING REQUESTED TO BE WAIVED BASED ON THE CALCULATIONS SHOWING THAT THE INFILTRATION BASIN WILL INFILTRATE THE 10-YEAR, 24 HOUR STORM EVENT USING AN INFILTRATION RATE OF ONE-HALF THE INFILTRATION RATE REPORTED IN THE SOILS REPORT. CALCULATIONS ARE PROVIDED TO SUPPORT THIS.

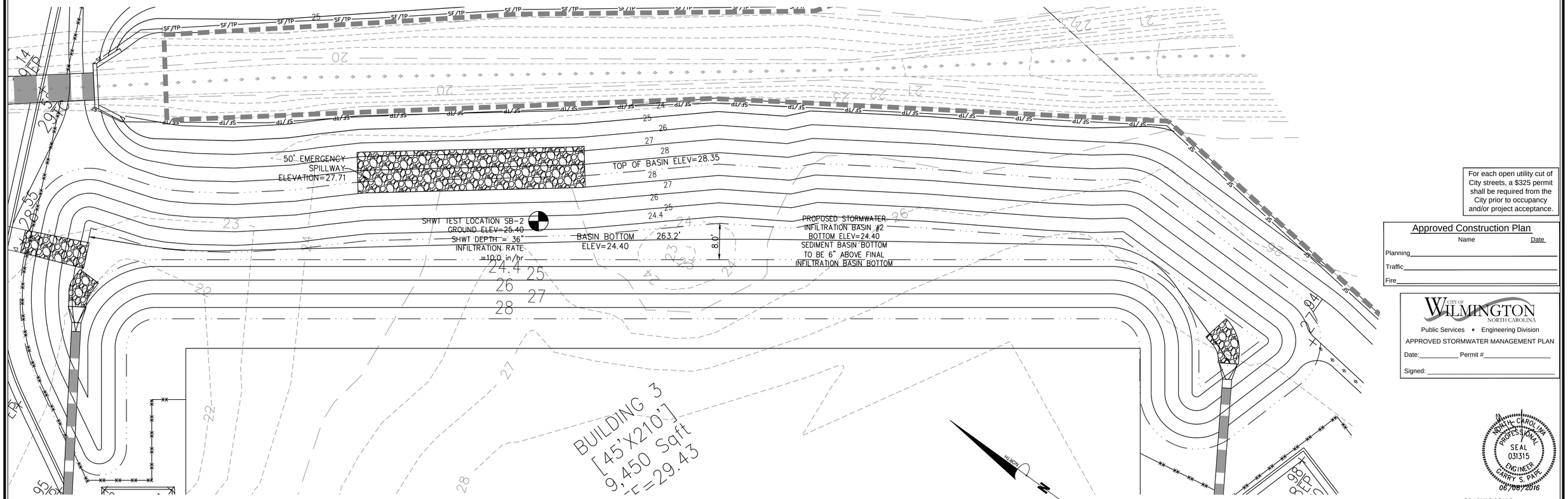

INFILTRATION BASIN #2

For each open utility cut of City streets, a $325 permit shall be required from the City prior to occupancy and/or project acceptance.

Approved Construction Plan

	Name	Date
Planning		
Traffic		
Fire		

CITY OF WILMINGTON
NORTH CAROLINA
Public Services • Engineering Division
APPROVED STORMWATER MANAGEMENT PLAN
Date:_____ Permit #_____
Signed: _____

NORTH CAROLINA PROFESSIONAL SEAL 031315 ENGINEER CARRY S. PAPE
06/08/2016

GRAPHIC SCALE
10 0 5 10 20
1 inch = 10 ft.

No.	Revision	Date	By

Designer: GSP	Scale: 1" = 10'
Drawn By: GSP	Date: February 2016
License #: P-0718	Job No.: 2016-0002

OLEANDER STORAGE II

Wilmington New Hanover County North Carolina

INFILTRATION BASIN DETAILS

PREPARED FOR:
Penton Storage, LLC
6105 Oleander Drive
Suite 201
Wilmington, NC 28403

GSP CONSULTING, PLLC
ENGINEERING
6626 Gordon Road Unit C Wilmington, North Carolina 28411 tel: 910-442-7870 fax: 910-799-6659

Sheet No.
C-6.1

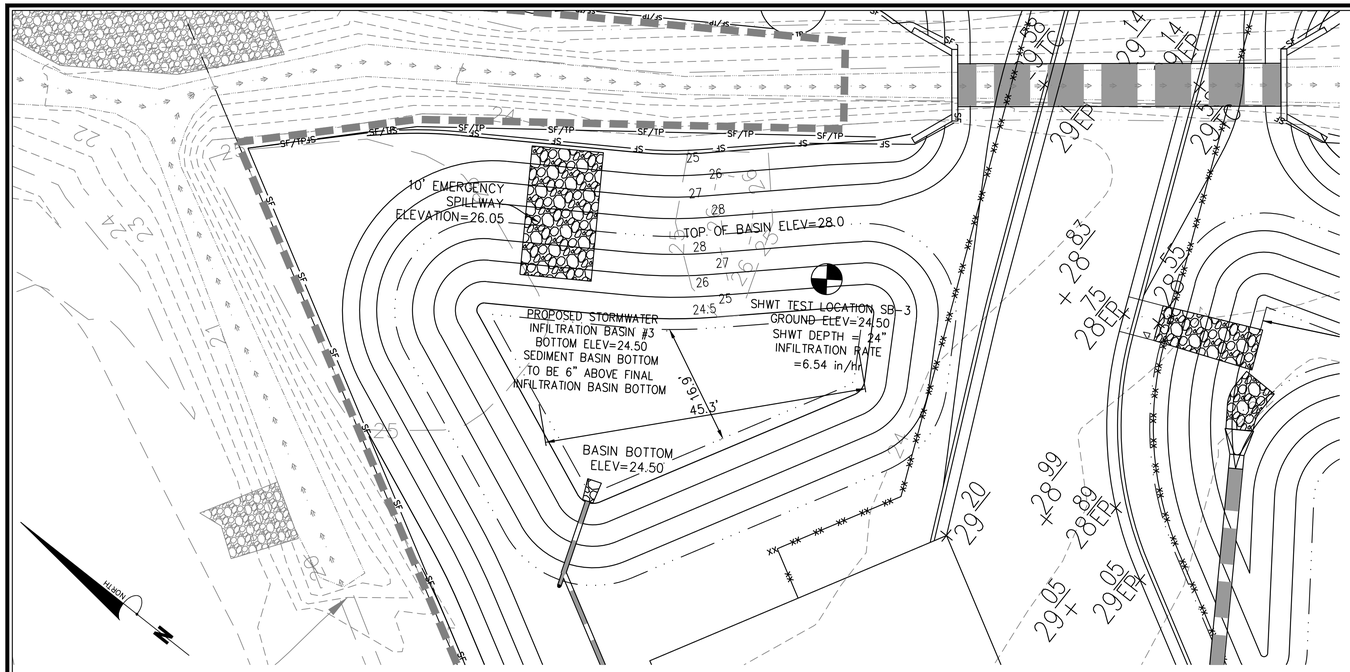

INFILTRATION BASIN #3

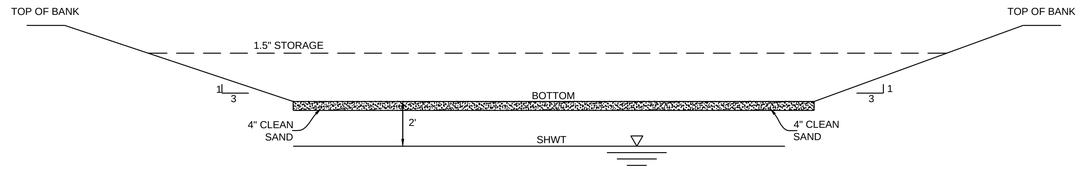

INFILTRATION BASIN	GROUND ELEVATION	SHWT DEPTH	SHWT ELEVATION	INFILTRATION RATES (in/hr)	BASIN BOTTOM ELEVATION	BASIN DEPTH (FT)	1.5" STORAGE ELEVATION	1.5" STORAGE VOLUME REQ. (CF)	1.5" STORAGE VOLUME PROV. (CF)	EMERGENCY SPILLWAY ELEVATION	EMERGENCY SPILLWAY WIDTH (FT)	50-YEAR ELEVATION	TOP OF BANK ELEVATION
BASIN #1	24.90	36"	21.90	9.53	23.90	3.1	25.15	2,186	2,228	25.90	20	26.06	27.00
BASIN #2	25.40	36"	22.40	10.00	24.40	3.6	26.05	6,482	6,503	27.71	50	27.90	28.40
BASIN #3	24.50	24"	22.50	6.54	24.50	3.5	25.05	575	634	26.05	10	26.17	28.00

INFILTRATION BASIN CROSS-SECTION
N.T.S.

NOTES:

1. REFER TO PROVIDED TABLE FOR SEASONAL HIGH WATER TABLE DETERMINATIONS & INFILTRATION RATES.
2. ALL IMPERVIOUS SITE AREA TO BE DRAINED TO PROPOSED STORM SEWER SYSTEM AND DISCHARGED TO INFILTRATION BASINS.
3. BASIN WILL BE PUMPED DOWN BY MECHANICAL MEANS IN CASE OF EMERGENCY.
4. PRIOR TO USE AS INFILTRATION BASINS, ALL ACCUMULATED SEDIMENT SHALL BE REMOVED AND PROPERLY DISPOSED OF, THEN THE APPROPRIATE MODIFICATIONS TO THE BASINS CAN BE INCORPORATED.
5. THE REQUIREMENTS FOR A BYPASS SYSTEM, VEGETATED FILTER STRIP AND ADDITIONAL STORAGE VOLUME FOR ALL BASINS ARE BEING REQUESTED TO BE WAIVED BASED ON THE CALCULATIONS SHOWING THAT THE INFILTRATION BASIN WILL INFILTRATE THE 10-YEAR, 24 HOUR STORM EVENT USING AN INFILTRATION RATE OF ONE-HALF THE INFILTRATION RATE REPORTED IN THE SOILS REPORT. CALCULATIONS ARE PROVIDED TO SUPPORT THIS.

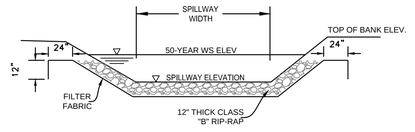

EMERGENCY SPILLWAY
N.T.S.

For each open utility cut of City streets, a $325 permit shall be required from the City prior to occupancy and/or project acceptance.

Approved Construction Plan

Name Date

Planning_____

Traffic_____

Fire_____

CITY OF WILMINGTON NORTH CAROLINA

Public Services • Engineering Division

APPROVED STORMWATER MANAGEMENT PLAN

Date:_____ Permit #_____

Signed: _____

NORTH CAROLINA PROFESSIONAL SEAL 031315 ENGINEER GARRY S. PAPE
06/08/2016

GRAPHIC SCALE
10 0 5 10 20
1 inch = 10 ft.

No.	Revision	Date	By

Designer GSP	Scale 1" = 10'
Drawn By GSP	Date February 2016
License # P-0718	Job No. 2016-0002

OLEANDER STORAGE II

Wilmington New Hanover County North Carolina

INFILTRATION BASIN DETAILS

PREPARED FOR:
Penton Storage, LLC
6105 Oleander Drive
Suite 201
Wilmington, NC 28403

GSP CONSULTING, PLLC
ENGINEERING
6626 Gordon Road Unit C Wilmington, North Carolina 28411 tel: 910-442-7870 fax: 910-799-6659

Sheet No.
C-6.2

GENERAL NOTES

I. LOCATION OF WHEELCHAIR RAMPS:
1. IN ACCORDANCE WITH THE RATIFIED HOUSE BILL 1296, ALL STREET CURBS IN NORTH CAROLINA BEING CONSTRUCTED OR RECONSTRUCTED FOR MAINTENANCE PROCEDURES, TRAFFIC OPERATIONS, REPAIRS, CORRECTION OF UTILITIES OR ALTERED FOR ANY REASON AFTER SEPTEMBER 1, 1973 SHALL PROVIDE WHEELCHAIR RAMPS FOR THE PHYSICALLY HANDICAPPED AT ALL INTERSECTIONS WHERE BOTH CURB AND GUTTERS AND SIDEWALKS ARE PROVIDED AND AT OTHER MAJOR POINTS OF PEDESTRIAN FLOW.
2. WHEELCHAIR RAMPS SHOULD BE LOCATED AS INDICATED IN DETAIL DRAWINGS, HOWEVER EXISTING LIGHT POLES, FIRE HYDRANTS, DROP INLETS, ETC. MAY AFFECT PLACEMENT.

II. CONSTRUCTION NOTES:
1. NO SLOPE SHALL EXCEED 1"=1" (12:1) ON THE RAMP OR SIDEWALK.
2. IN NO CASE SHALL THE WIDTH OF WHEELCHAIR RAMPS BE LESS THAN 40" (3'-4"). WIDTHS MAY EXCEED 40" IF NECESSARY.
3. USE CLASS "A" CONCRETE WITH THE SURFACE HAVING A ROUGH, NON-SKID TYPE FINISH.
4. 1/2" EXPANSION JOINT WILL BE REQUIRED WHERE THE CONCRETE WHEELCHAIR RAMP JOINS ANY RIGID PAVEMENT OR STRUCTURE.
5. CONSTRUCTION METHODS SHALL CONFORM WITH THOSE OF THE GOVERNING BODY WHICH HAS JURISDICTION OF THE PARTICULAR STREET.

III. ADDITIONAL NOTES:
1. THE INSIDE PEDESTRIAN CROSSWALK LINES SHALL BE ESTABLISHED BY BISECTING THE INTERSECTION RADII WHERE MARKED (SEE NOTE 6).
2. THE WHEELCHAIR RAMP SHALL BE LOCATED SO THAT THE BEGINNING OF THE WHEEL CHAIR RAMP WILL BE TWO FEET FROM THE INSIDE PEDESTRIAN CROSSWALK LINE.
3. THE WIDTH OF THE PEDESTRIAN CROSSWALK SHALL BE 10 FEET UNLESS A GREATER WIDTH IS REQUIRED TO ACCOMMODATE THE PEDESTRIAN TRAFFIC.
4. STOP BARS SHALL BE USED WHERE IT IS IMPORTANT TO INDICATE THE POINT BEHIND WHICH VEHICLES ARE REQUIRED TO STOP IN COMPLIANCE WITH A TRAFFIC SIGNAL, STOP SIGN, OR OTHER LEGAL REQUIREMENTS.
5. PARKING SHALL BE ELIMINATED A MINIMUM OF 20 FEET BACK OF PEDESTRIAN CROSSWALK.
6. ALL PAVEMENT MARKINGS SHALL BE IN ACCORDANCE WITH THE LATEST EDITION OF THE MANUAL OF UNIFORM TRAFFIC CONTROL DEVICES, PUBLISHED BY THE FEDERAL HIGHWAY ADMINISTRATION. THIS IS AVAILABLE FROM THE SUPERINTENDENT OF DOCUMENTS, U.S GOVERNMENT PRINTING OFFICE, WASHINGTON, D.C. 20402.

GUIDELINES FOR WHEELCHAIR RAMPS

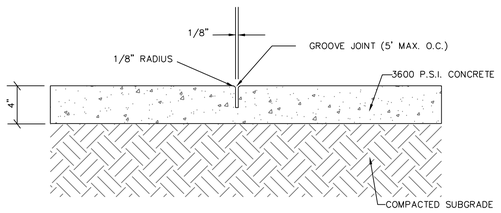

CONCRETE SIDEWALK DETAIL

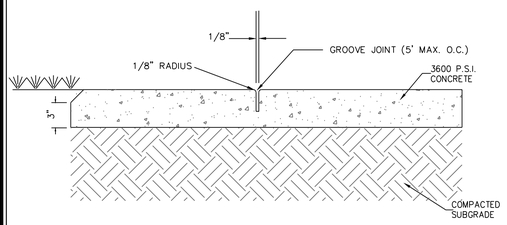

SIDEWALK ADJACENT TO GRASSED AREAS AND PLANTERS

CONCRETE SIDEWALK

N.T.S.

GENERAL NOTES:
A GROOVE JOINT 1" DEEP WITH 1/8" RADII SHALL BE REQUIRED IN THE CONCRETE SIDEWALK AT 5' INTERVALS. ONE 1/2" EXPANSION JOINT WILL BE REQUIRED AT 45' INTERVALS. A 1/2" EXPANSION JOINT WILL BE REQUIRED WHERE THE SIDEWALK ABUTS ANY CURB & GUTTER AND ANY RIGID STRUCTURES. IN SIDEWALKS & PLAZA AREAS EXPANSION JOINTS ARE REQUIRED AT NO GREATER THAN 30' INTERVALS CONCRETE SHALL BE 3600 PSI. IN 28 DAYS.

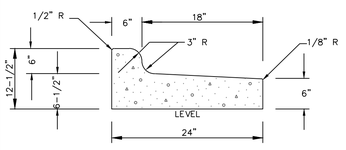

(TO BE USED WHEN PAVEMENT IS SLOPED AWAY FROM ISLAND 1/4' : 1'-0" SLOPE OR AS SHOWN ON PLANS)

24" CURB AND GUTTER (REVERSE SLOPE)

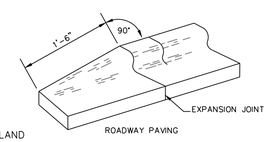

24" CURB & GUTTER TERMINATION DETAIL

CURB AND GUTTER

N.T.S.

GENERAL NOTES:
CONTRACTION JOINTS SHALL BE SPACED AT MAX. 10' INTERVALS, EXCEPT THAT A 15 FOOT SPACING MAY BE USED WHEN A MACHINE IS USED OR WHEN SATISFACTORY SUPPORT FOR THE FACE FORM CAN BE OBTAINED WITHOUT THE USE OF TEMPLATES AT 10 FOOT INTERVALS. JOINT SPACING MAY BE ALTERED BY THE ENGINEER TO PREVENT UNCONTROLLED CRACKING. CONTRACTION JOINTS MAY BE INSTALLED BY THE USE OF TEMPLATES OR FORMED BY OTHER APPROVED METHODS. WHERE SUCH JOINTS ARE NOT FORMED BY TEMPLATES, A MINIMUM DEPTH OF 1-1/2" SHALL BE OBTAINED. ALL CONTRACTION JOINTS EXCEPT IN 8" X 6" MEDIAN CURB SHALL BE FILLED WITH JOINT SEALER. EXPANSION JOINTS SHALL BE SPACED AT 90' INTERVALS AND ADJACENT TO ALL RIGID OBJECTS.

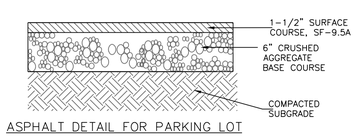

ASPHALT DETAIL FOR PARKING LOT

PAVEMENT DETAIL

N.T.S.

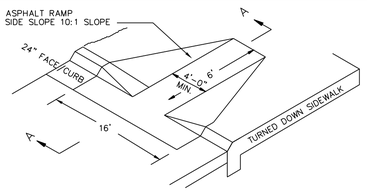

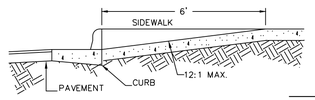

SECTION A-A
WHEELCHAIR RAMP (DROP CURB)

WHEELCHAIR RAMP

N.T.S.

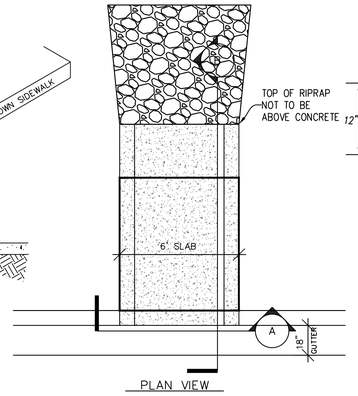

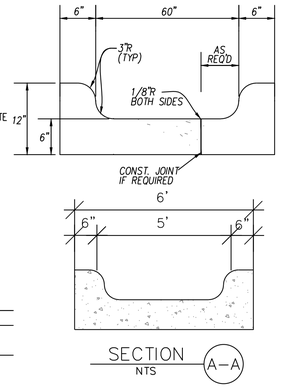

SECTION A-A
NTS

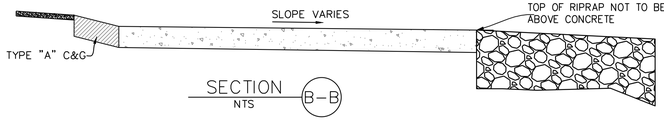

SECTION B-B
NTS

STORM DRAINAGE FLUME

N.T.S.

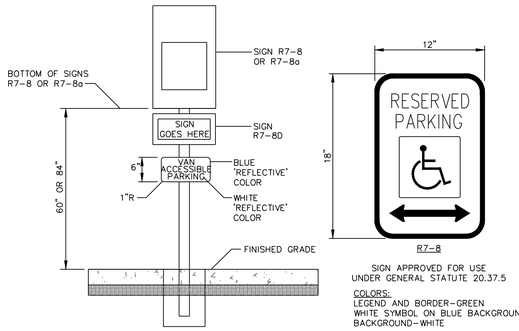

SIGN APPROVED FOR USE UNDER GENERAL STATUTE 20.37.5

COLORS:
LEGEND AND BORDER-GREEN
WHITE SYMBOL ON BLUE BACKGROUND
BACKGROUND-WHITE

HANDICAP PARKING SIGNAGE

N.T.S.

SEQUENCE OF CONSTRUCTION

LIMITS OF CONSTRUCTION = 3.33 ACRES

1. INSTALL TEMPORARY CONSTRUCTION ENTRANCE AS SHOWN ON EROSION & SEDIMENT CONTROL PLAN.

2. INSTALL PERIMETER CONTROLS (TEMPORARY SILT FENCE, TREE PROTECTION FENCING, SEDIMENT BASIN) AS SHOWN ON THE EROSION & SEDIMENT CONTROL PLAN. THIS STEP NEEDS TO BE COMPLETED PRIOR TO UPSLOPE LAND DISTURBING ACTIVITIES.

3. THE PROPOSED INFILTRATION BASINS WILL ACT AS A SEDIMENT BASINS DURING CONSTRUCTION ACTIVITIES.

4. ONCE PERIMETER CONTROLS AND SEDIMENT TRAPPING MEASURES ARE INSTALLED CLEAR AND GRUB SITE WITHIN LIMITS OF DISTURBANCE. THE SEDIMENT BASIN WILL BE PUMPED DOWN BY MECHANICAL MEANS AS NEEDED TO MUCK OUT SEDIMENT WHEN THE SEDIMENT REACHES 50% CAPACITY.

5. UPON BRINGING THE SITE TO ROUGH GRADE, STABILIZE ALL AREAS WITH TEMPORARY VEGETATION IF LEFT UNDISTURBED FOR 15 WORKING DAYS AND ALL SLOPES WITHIN 21 CALENDAR DAYS.

6. ONCE THE PAVEMENT AREAS AND STORM SEWERS ARE IN PLACE, INSTALL INLET PROTECTION AS SHOWN ON THE EROSION & SEDIMENT CONTROL PLAN.

7. UPON BRINGING THE PAVEMENT AREAS TO SUBGRADE ELEVATIONS, STABILIZE THE AREAS BY PLACING STONE BASE AS EARLY AS POSSIBLE.

8. FOR TEMPORARY VEGETATIVE STABILIZATION OF ALL DENUDED AREAS SEE NOTE REFERENCING THE EROSION CONTROL PROGRAM AND SPECIFICATIONS ON SHEET C-1.

9. AFTER CONSTRUCTION OPERATIONS HAVE ENDED AND ALL DISTURBED AREAS HAVE BEEN STABILIZED, MECHANICAL SEDIMENT CONTROLS SHALL BE REMOVED. SEDIMENT FROM TEMPORARY SEDIMENT TRAPPING DEVICES SHALL BE DISPOSED OF BY SPREADING ON THE SITE OR HAULING AWAY IF NOT SUITABLE FOR FILL. ALL DENUDED AREAS ARE TO BE PERMANENTLY STABILIZED WITH PERMANENT VEGETATION.

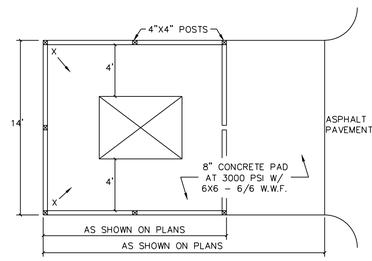

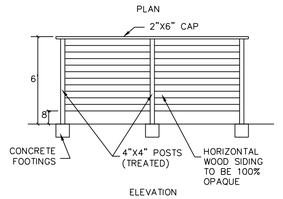

DUMPSTER PAD & ENCLOSURE DETAIL

N.T.S.

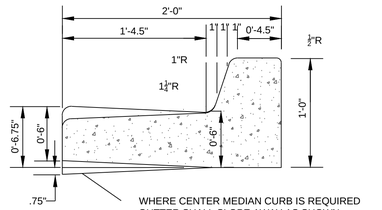

STANDARD CURB SECTION TYPE "A"

SD 7-01

NOT TO SCALE

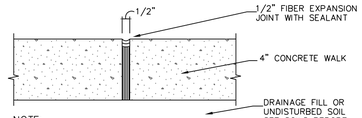

NOTE:
PROVIDE CONSTRUCTION JOINTS AT 25' O.C. MAX. IN EITHER DIRECTION WITH SQUARE FOOTAGE LESS THAN 400 S.F. AND AT CURVES, TANGENTS, AND CORNERS (UNLESS NOTED OTHERWISE).

CONSTRUCTION JOINT

N.T.S.

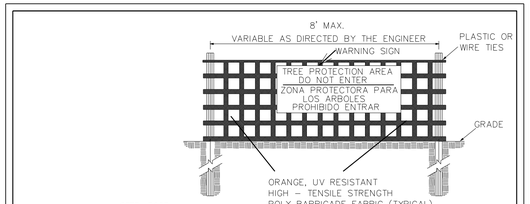

FRONT VIEW

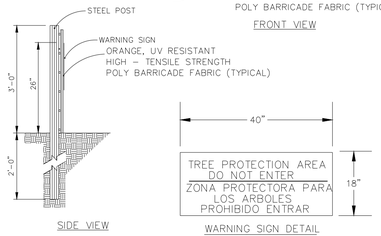

SIDE VIEW

WARNING SIGN DETAIL

NOTES:
1. THE TREE PROTECTION FENCING SHALL NOT BE VIOLATED FOR THE ENTIRE DURATION OF THE PROJECT WITHOUT APPROVAL FROM URBAN FORESTRY STAFF.
2. WARNING SIGNS TO BE MADE OF DURABLE, WEATHERPROOF MATERIAL. LETTERS TO BE 3" HIGH, MINIMUM, CLEARLY LEGIBLE AND SPACED AS DETAILED.
3. SIGNS SHALL BE PLACED AT 50' MAXIMUM INTERVALS. PLACE A SIGN AT EACH END OF LINEAR TREE PROTECTION AND 50' ON CENTER THEREAFTER. FOR TREE PROTECTION AREAS LESS THAN 100' IN PERIMETER, PROVIDE NO LESS THAN TWO SIGNS PER PROTECTION AREA.
4. ATTACH SIGNS SECURELY TO FENCE POSTS AND FABRIC. MAINTAIN TREE PROTECTION FENCE AND SIGNS THROUGHOUT DURATION OF PROJECT.
5. TREE PROTECTION FENCING AND SIGNAGE SHALL BE REMOVED AFTER CONSTRUCTION.
6. ADDITIONAL SIGNS MAY BE REQUIRED BY CITY OF WILMINGTON, BASED ON ACTUAL FIELD CONDITIONS.

DATE: JAN, 2015	STANDARD DETAIL
DRAWN BY JSR	TREE PROTECTION DURING CONSTRUCTION
CHECKED BY RDG, P.E.	SHEET 2 of 2
SCALE NOT TO SCALE	SD 15-09

CITY OF WILMINGTON ENGINEERING
PO BOX 1810
WILMINGTON, NC 28402
(910) 341-7807

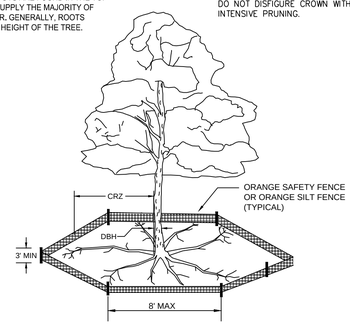

NOTE:
THE CRITICAL ROOT ZONE (CRZ) OF A TREE IS WHERE THE MAJORITY OF A TREE'S ROOTS LAY. 85% OF MOST TREE ROOTS ARE FOUND IN THE TOP 24" OF THE SOIL AND SUPPLY THE MAJORITY OF NUTRIENTS AND WATER. GENERALLY, ROOTS SPREAD OUT 2-3X THE HEIGHT OF THE TREE.

NOTE:
CROWN OF THE TREE IS NEEDED FOR LEAF GROWTH TO PRODUCE OXYGEN, FILTER THE AIR, REDUCE WIND AND SOFTEN NOISE. DO NOT DISFIGURE CROWN WITH INTENSIVE PRUNING.

NOTES:
1. PROTECT CRITICAL ROOT ZONE (CRZ) OF TREES PRIOR TO CONSTRUCTION. CLEARLY MARK THE TREES AND ERECT A PROTECTIVE BARRIER AT THE CRZ. BARRIER SHALL BE MAINTAINED UNTIL CONSTRUCTION IS COMPLETE.
2. CRZ RADIUS IS 1 FT PER INCH OF TREE DIAMETER AT BREAST HEIGHT (DBH).
3. IF CONSTRUCTION OCCURS WITHIN THE CRZ, AT LEAST 12" OF MULCH AND/OR LOGGING MATTS SHALL BE PLACED WHERE MACHINERY MANEUVERS TO REDUCE SOIL COMPACTION IN THIS ZONE.
4. WHERE SIDEWALKS AND PATHWAYS PASS WITHIN CRZ, EXTRA CARE SHALL BE TAKEN TO AVOID DAMAGE TO THE ROOTS. ALTERNATE CONSTRUCTION METHODS, SUCH AS A REINFORCED SIDEWALK, SHALL BE IMPLEMENTED AS NECESSARY.
5. FOR ALL TREES, CUTTING OF LARGE STRUCTURAL ROOTS LOCATED NEAR THE BASE OF THE TRUNK IS PROHIBITED. DO NOT COMPACT SOIL BENEATH TREES. NO VEHICLE SHALL BE ALLOWED TO PARK UNDER TREES. NO MATERIALS OR EQUIPMENT SHALL BE STORED BENEATH TREES. DAMAGING THE BARK WITH LAWNMOWERS, CONSTRUCTION EQUIPMENT, OR ANYTHING ELSE IS PROHIBITED. CONTRACTOR SHALL REPAIR DAMAGE TO TREES.
6. FAILING TO INSTALL OR MAINTAIN PROTECTION MEASURES SHALL RESULT IN A STOP WORK ORDER AND FINE OF $500/DAY. DISTURBANCE OTHER THAN THAT ALLOWED ON THE APPROVED PLAN WILL REQUIRE OWNER TO POST A LETTER OF CREDIT FOR 3 YRS FOR TREE MITIGATION.

DATE: JAN, 2015	STANDARD DETAIL
DRAWN BY JSR	TREE PROTECTION DURING CONSTRUCTION
CHECKED BY RDG, P.E.	SHEET 1 of 2
SCALE NOT TO SCALE	SD 15-09

CITY OF WILMINGTON ENGINEERING
PO BOX 1810
WILMINGTON, NC 28402
(910) 341-7807

Approved Construction Plan

Name Date

Planning _____

Traffic _____

Fire _____

CITY OF WILMINGTON NORTH CAROLINA
Public Services • Engineering Division
APPROVED STORMWATER MANAGEMENT PLAN
Date: _____ Permit # _____
Signed: _____

For each open utility cut of City streets, a $325 permit shall be required from the City prior to occupancy and/or project acceptance.

NORTH CAROLINA PROFESSIONAL SEAL 031315 ENGINEER GARRY S. PAPE
06/08/2016

No.	Revision	Date	By

Designer GSP	Scale 1" = 30'
Drawn By GSP	Date February 2016
License # P-0718	Job No. 2016-0002

OLEANDER STORAGE II

Wilmington New Hanover County North Carolina

STANDARD DETAILS

PREPARED FOR:
Penton Storage, LLC
6105 Oleander Drive
Suite 201
Wilmington, NC 28403

GSP CONSULTING, PLLC
ENGINEERING
6626 Gordon Road Unit C Wilmington, North Carolina 28411 tel: 910-442-7870 fax: 910-799-6659

Sheet No. C-7

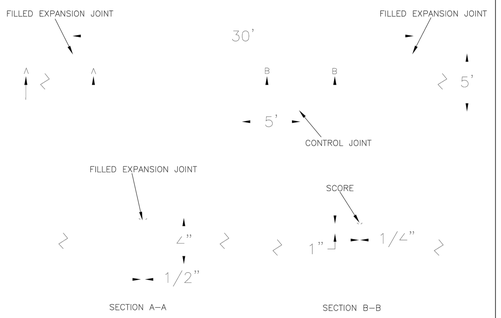

NOTES:

1. JOINT MATERIAL TO COMPLY WITH CURRENT NCDOT STANDARDS.
2. SANITARY SEWER CLEAN-OUTS, WATER METERS, MANHOLES, AND VALVE LIDS TO BE LOCATED OUTSIDE SIDEWALK WHERE FEASIBLE.
3. MINIMUM SIDEWALK WIDTH TO BE 6' MINIMUM IF PLACED AT BACK OF CURB.
4. CONCRETE FOR ALL SIDEWALKS (EXCEPT ANY PORTION CONTAIN WITHIN A DRIVEWAY APRON) SHALL BE CLASS "A" - 3,000 PSI.
5. MINIMUM REPLACEMENT FOR REPAIRS IS A 5' X 5' PANEL
6. 4" STONE BASE MAY BE REQUIRED FOR POOR SOIL CONDITIONS
7. MINIMUM DEPTH FOR TUNNELING BELOW SIDEWALK IS 12"
8. MAX ADJACENT GROUND SLOPE WITHOUT RAILING IS 2:1
9. MIN GRADE FOR PROPER DRAINAGE IS 1% IN AT LEAST 1 DIRECTION. MAX CROSS SLOPE IS 2%. MAX LONGITUDINAL SLOPE IS 8.3%, 10% IF LIMITED BY EXISTING CONDITIONS, OR NO GREATER THAN THE SLOPE OF THE EXISTING ADJACENT ROAD.

STANDARD DETAIL		
DATE: OCTOBER, 2010	SIDEWALK	CITY OF WILMINGTON NORTH CAROLINA CITY OF WILMINGTON ENGINEERING PO BOX 1810 WILMINGTON N.C. 28402 (910) 341-7807
DRAWN: PB/JSR		
CHECKED: DEC		
SCALE NOT TO SCALE		SD 3-10

STORM TABLE

FROM	TO	LENGTH (ft)	DIAMETER (in)	SLOPE (%)	INV. DN (ft)	INV. UP (ft)	RIM (ft)	MATERIAL
2	1	66	15	0.30	24.40	24.60	28.83	HDPE
3	2	131	15	0.30	24.60	24.99	28.97	HDPE
4	2	120	15	0.30	24.60	24.96	28.83	HDPE
6	5	39	18	0.30	24.40	24.52	28.85	HDPE
7	6	92	18	0.30	24.52	24.80	28.85	HDPE
8	7	140	15	0.30	24.80	25.22	28.85	HDPE
9	8	75	15	0.30	25.22	25.45	28.16	HDPE
11	10	11	6	1.05	24.50	24.61	27.90	PVC
12	11	16	6	1.00	24.61	24.77	27.90	PVC
13	12	50	6	1.00	24.77	25.27	27.90	PVC
14	13	50	6	1.00	25.27	25.77	27.90	PVC
15	14	50	6	1.00	25.77	26.27	27.90	PVC
16	15	43	6	1.00	26.27	26.70	27.90	PVC

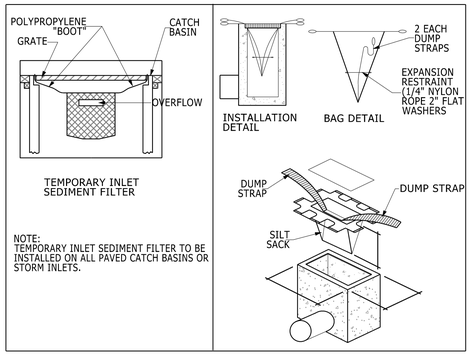

NOTE:
TEMPORARY INLET SEDIMENT FILTER TO BE INSTALLED ON ALL PAVED CATCH BASINS OR STORM INLETS.

SILT SACK DETAIL

NOT TO SCALE

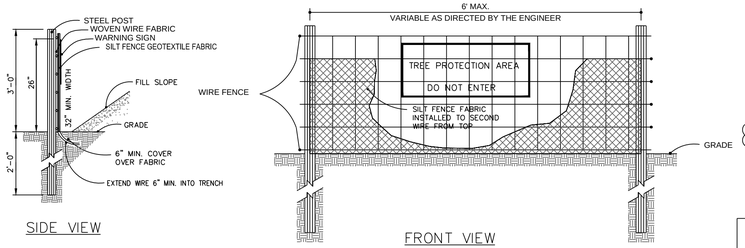

NOTES:
1. SYNTHETIC FILTER FABRIC SHOULD BE OF AT LEAST 95% BY WEIGHT OF POLYOLEFINS OR POLYESTER, WHICH IS CERTIFIED BY THE MANUFACTURER OR SUPPLIER PER ASTM D 6461 AND SHOULD CONTAIN ULTRAVIOLET RAY INHIBITORS AND STABILIZERS PER ASTM D 4355.

2. WIRE FENCE SHALL BE MINIMUM 14 GAUGE WITH A MAXIMUM MESH OPENING OF 6-INCHES.

3. SEE THE NC EROSION AND SEDIMENTATION CONTROL MANUAL FOR OTHER SPECIFICATIONS.

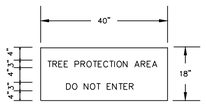

WARNING SIGN DETAIL

NOTE:
WARNING SIGNS TO BE MADE OF DURABLE, WEATHERPROOF MATERIAL. LETTERS TO BE 3" HIGH MINIMUM, CLEARLY LEGIBLE AND SPACED AS DETAILED. SIGNS SHALL BE PLACED AT 50' MAXIMUM INTERVALS. PLACE A SIGN AT EACH END OF LINEAR TREE PROTECTION AND 50' ON CENTER THEREAFTER. FOR TREE PROTECTION AREAS LESS THAN 200' IN PERIMETER, PROVIDE NO LESS THAN ONE SIGN PER PROTECTION AREA. ATTACH SIGNS SECURELY TO FENCE POSTS AND FABRIC. MAINTAIN TREE PROTECTION FENCE THROUGHOUT DURATION OF PROJECT.

STANDARD TEMPORARY SILT / TREE PROTECTION FENCE

N.T.S.

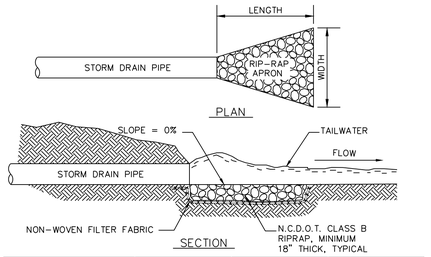

RIPRAP LOCATIONS	LENGTH (FT.)	UPSTREAM WIDTH (FT.)	DOWNSTREAM WIDTH (FT.)
CONC FLUME	5.0	5.0	6.0
6" STORM	3.0	1.5	2.0
15" STORM	7.5	3.75	5.0
18" STORM	9.0	4.5	6.0

RIP-RAP OUTLET PROTECTION

N.T.S.

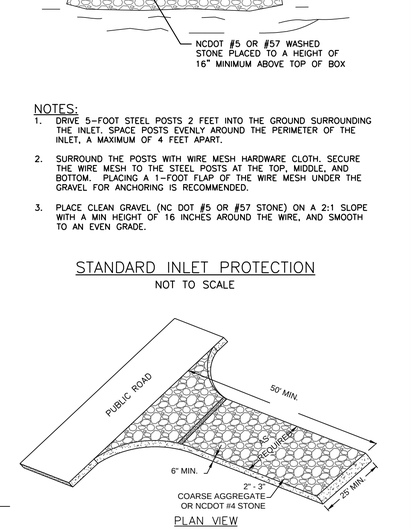

NOTES:
1. DRIVE 5-FOOT STEEL POSTS 2 FEET INTO THE GROUND SURROUNDING THE INLET. SPACE POSTS EVENLY AROUND THE PERIMETER OF THE INLET, A MAXIMUM OF 4 FEET APART.
2. SURROUND THE POSTS WITH WIRE MESH HARDWARE CLOTH. SECURE THE WIRE MESH TO THE STEEL POSTS AT THE TOP, MIDDLE, AND BOTTOM. PLACING A 1-FOOT FLAP OF THE WIRE MESH UNDER THE GRAVEL FOR ANCHORING IS RECOMMENDED.
3. PLACE CLEAN GRAVEL (NC DOT #5 OR #57 STONE) ON A 2:1 SLOPE WITH A MIN HEIGHT OF 16 INCHES AROUND THE WIRE, AND SMOOTH TO AN EVEN GRADE.

STANDARD INLET PROTECTION

NOT TO SCALE

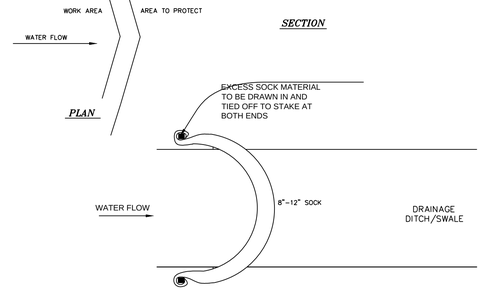

COMPOST FILTER SOCK (OR OTHER COMPARABLE FLUME PROTECTION)

N.T.S.

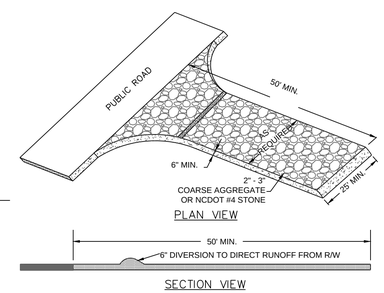

TEMPORARY CONSTRUCTION ENTRANCE

N.T.S.

For each open utility cut of City streets, a $325 permit shall be required from the City prior to occupancy and/or project acceptance.

Approved Construction Plan

Name Date

Planning _____

Traffic _____

Fire _____

CITY OF WILMINGTON NORTH CAROLINA
Public Services • Engineering Division
APPROVED STORMWATER MANAGEMENT PLAN
Date:_____ Permit #_____
Signed: _____

NORTH CAROLINA PROFESSIONAL SEAL 031315 ENGINEER GARRY S. PAP 06/08/2016

No.	Revision	Date	By

Designer GSP	Scale 1" = 30'
Drawn By GSP	Date February 2016
License # P-0718	Job No. 2016-0002

OLEANDER STORAGE II

Wilmington New Hanover County North Carolina

STANDARD DETAILS

PREPARED FOR:
Penton Storage, LLC
6105 Oleander Drive
Suite 201
Wilmington, NC 28403

GSP CONSULTING, PLLC
ENGINEERING
6626 Gordon Road Unit C Wilmington, North Carolina 28411 tel: 910-442-7870 fax: 910-799-6659

Sheet No. **C-8**

STATE OF NORTH CAROLINA DEPT. OF TRANSPORTATION DIVISION OF HIGHWAYS RALEIGH, N.C. 1-12

ENGLISH STANDARD DRAWING FOR **DROP INLET FRAME AND GRATES** FOR USE WITH STD. DWG.S 840.14 AND 840.15

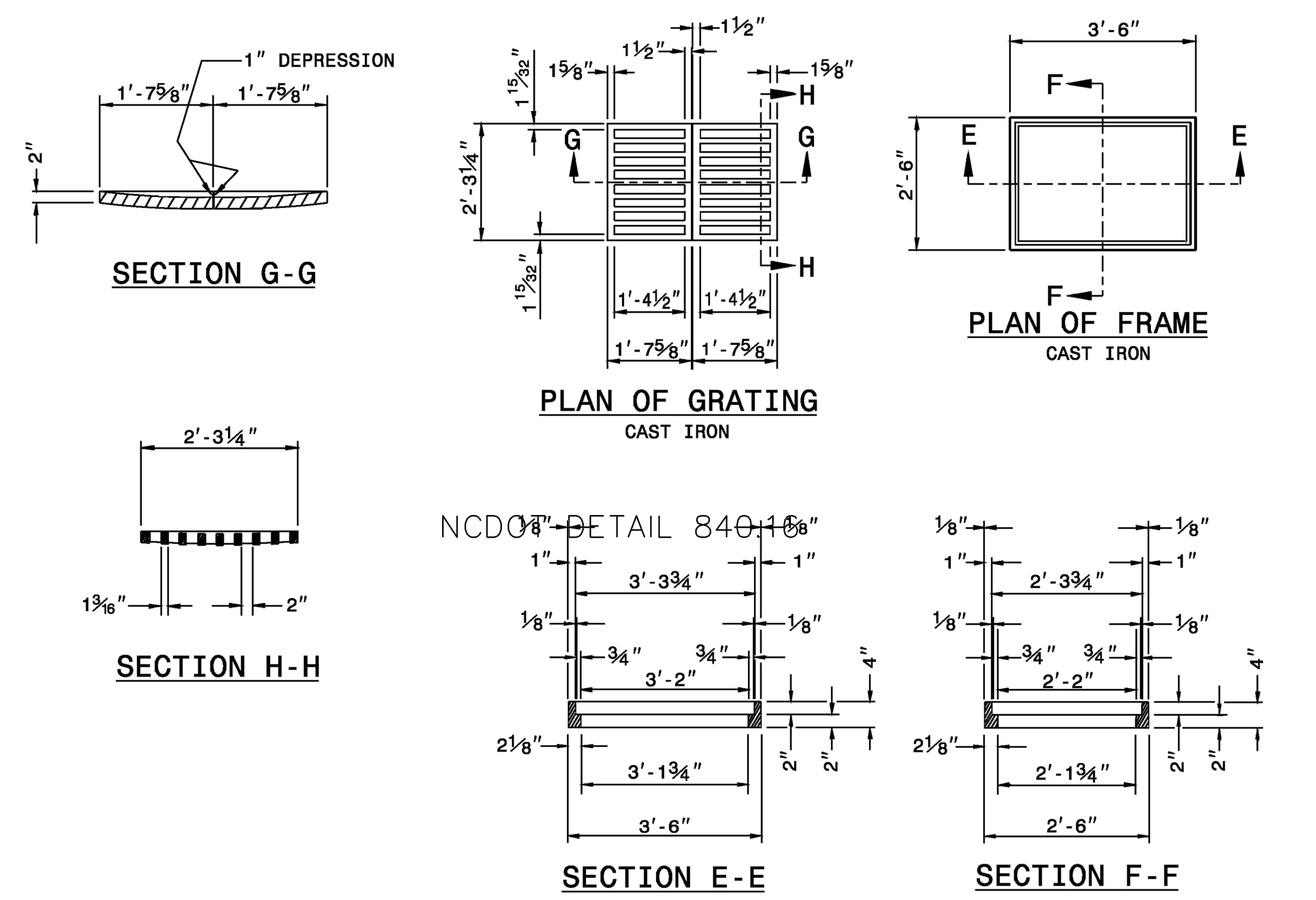

SHEET 1 OF 1
840.16

STATE OF NORTH CAROLINA DEPT. OF TRANSPORTATION DIVISION OF HIGHWAYS RALEIGH, N.C. 1-12

ENGLISH STANDARD DRAWING FOR **REINFORCED CONCRETE ENDWALL** FOR SINGLE 72" PIPE 90° SKEW

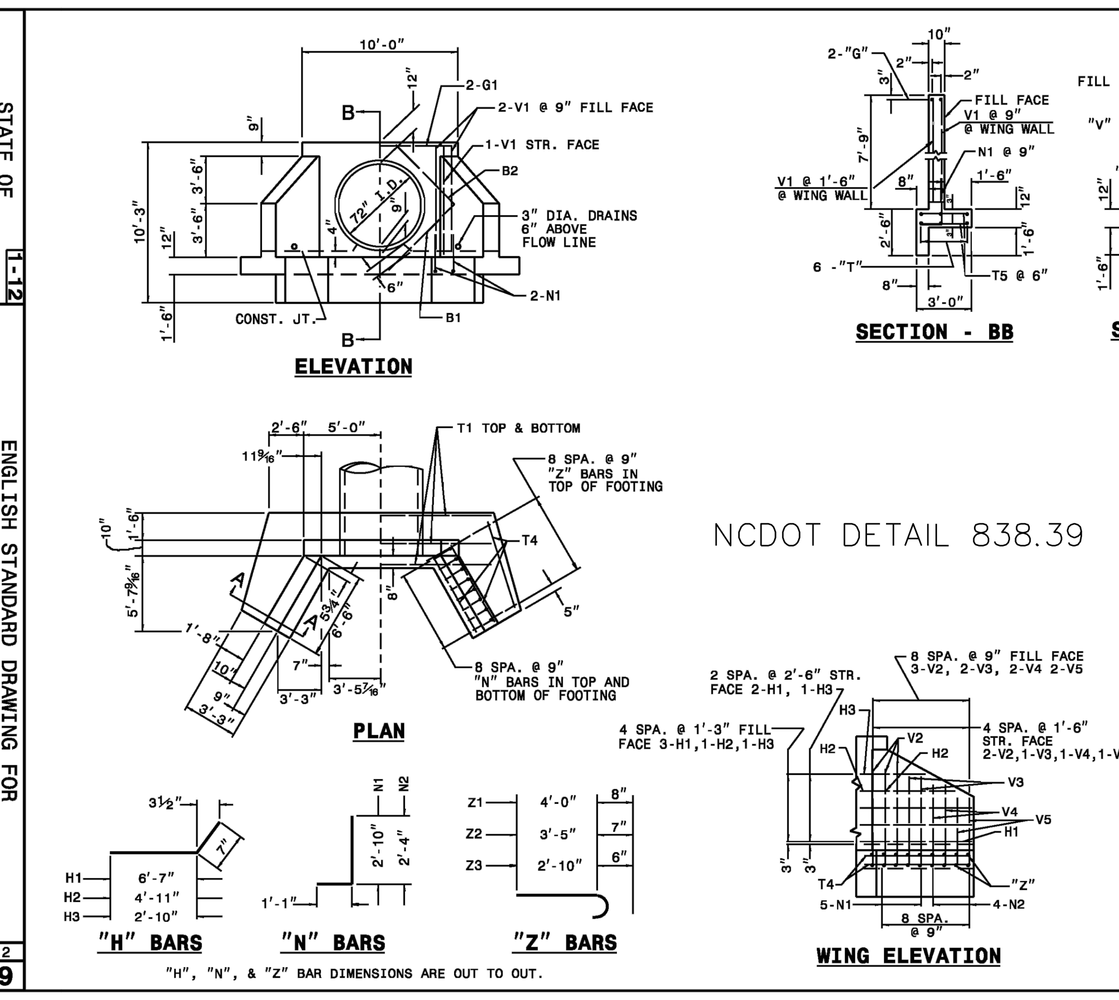

SEE STD.# 838.45 FOR GENERAL NOTES.

BILL OF MATERIAL FOR ENDWALL				
REINF. STEEL			1 PIPE	
BAR	SIZE	LENGTH	NO.	WEIGHT
B1	#4	5'-6"	4	15
B2	#4	4'-6"	4	12
G1	#7	9'-8"	2	40
H1	#4	7'-2"	10	48
H2	#4	5'-6"	2	7
H3	#4	3'-5"	4	9
N1	#5	3'-11"	14	57
N2	#4	3'-5"	8	18
T1	#4	14'-6"	6	58
T4	#4	6'-9"	6	27
T5	#4	2'-6"	40	67
V1	#4	7'-3"	6	29
V2	#4	5'-10"	10	39
V3	#4	5'-0"	6	20
V4	#4	4'-1"	6	16
V5	#4	3'-2"	6	13
Z1	#6	4'-8"	6	42
Z2	#5	4'-0"	6	25
Z3	#4	3'-4"	6	13
REINF. STEEL LBS.				555
CON./R.C. CU. YDS			7.1	

SHEET 1 OF 2
838.39

STATE OF NORTH CAROLINA DEPT. OF TRANSPORTATION DIVISION OF HIGHWAYS RALEIGH, N.C. 1-12

ENGLISH STANDARD DRAWING FOR **CONCRETE DROP INLET** 12" THRU 30" PIPE

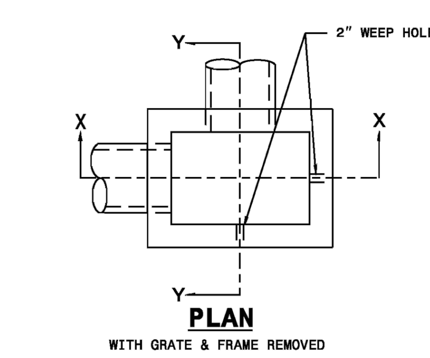

GENERAL NOTES:

USE CLASS "B" CONCRETE THROUGHOUT.

PROVIDE ALL DROP INLETS OVER 3'-6" IN DEPTH WITH STEPS 12" ON CENTER. USE STEPS WHICH COMPLY WITH STD. DRAWING 840.66.

OPTIONAL CONSTRUCTION - MONOLITHIC POUR 2" KEYWAY OR #4 BAR DOWELS AT 12" CENTERS AS DIRECTED BY THE ENGINEER.

USE FORMS FOR THE CONSTRUCTION OF THE BOTTOM SLAB.

IF REINFORCED CONCRETE PIPE IS SET IN BOTTOM SLAB OF BOX, ADD TO SLAB AS SHOWN ON STD. NO. 840.00.

CONSTRUCT WITH PIPE CROWNS MATCHING.

SEE STANDARD DRAWING 840.25 FOR ATTACHMENT OF FRAMES AND GRATES NOT SHOWN.

INSTALL 2" WEEPHOLES AS DIRECTED BY THE ENGINEER.

INSTALL STONE DRAINS, OF A MINIMUM OF 1 CUBIC FOOT OF NO. 78M STONE IN A POROUS FABRIC BAG OR WRAP, AT EACH WEEP HOLE OR AS DIRECTED BY THE ENGINEER.

CHAMFER ALL EXPOSED CORNERS 1".

DRAWING NOT TO SCALE.

NCDOT DETAIL 840.14

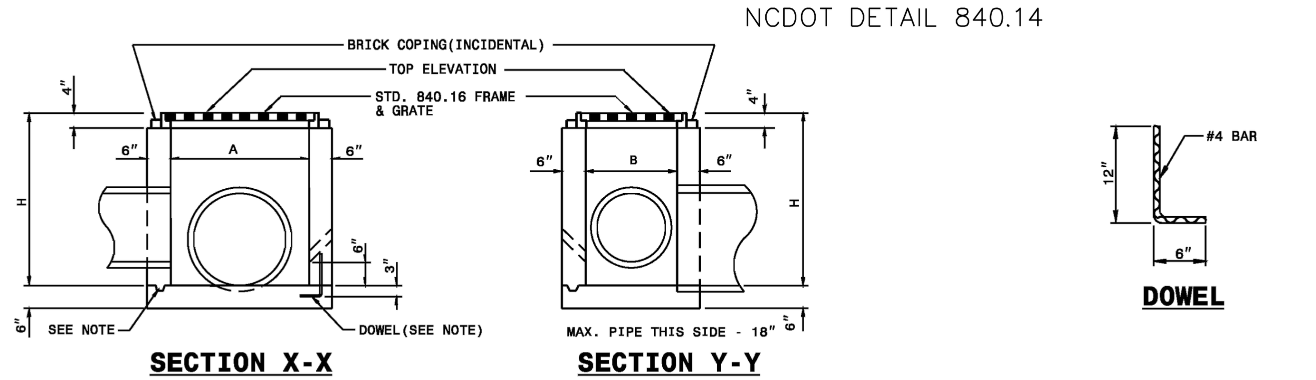

DIMENSIONS AND QUANTITIES FOR DROP INLET(BASED ON MIN. HEIGHT, H)								
DIMENSIONS OF BOX & PIPE				CUBIC YARDS CONC. IN BOX			DEDUCTIONS FOR ONE PIPE	
PIPE	SPAN	WIDTH	MIN. HEIGHT	BOTTOM SLAB	WALL PER FT. HT.	TOTAL CONCRETE FOR MINIMUM HEIGHT, H	C.M.	R.C.
D	A	B	H					
12"	3'-0"	2'-0"	2'-0"	0.222	0.222	0.592	0.015	0.026
15"	/	/	2'-3"	/	/	0.648	0.023	0.036
18"	/	/	2'-6"	/	/	0.703	0.033	0.049
24"	/	/	3'-0"	/	/	0.814	0.059	0.085
30"	3'-0"	2'-0"	3'-6"	0.222	0.222	0.925	0.092	0.127

SHEET 1 OF 1
840.14

STATE OF NORTH CAROLINA DEPT. OF TRANSPORTATION DIVISION OF HIGHWAYS RALEIGH, N.C. 1-12

ENGLISH STANDARD DRAWING FOR **REINFORCED CONCRETE ENDWALL** FOR SINGLE 72" PIPE 90° SKEW

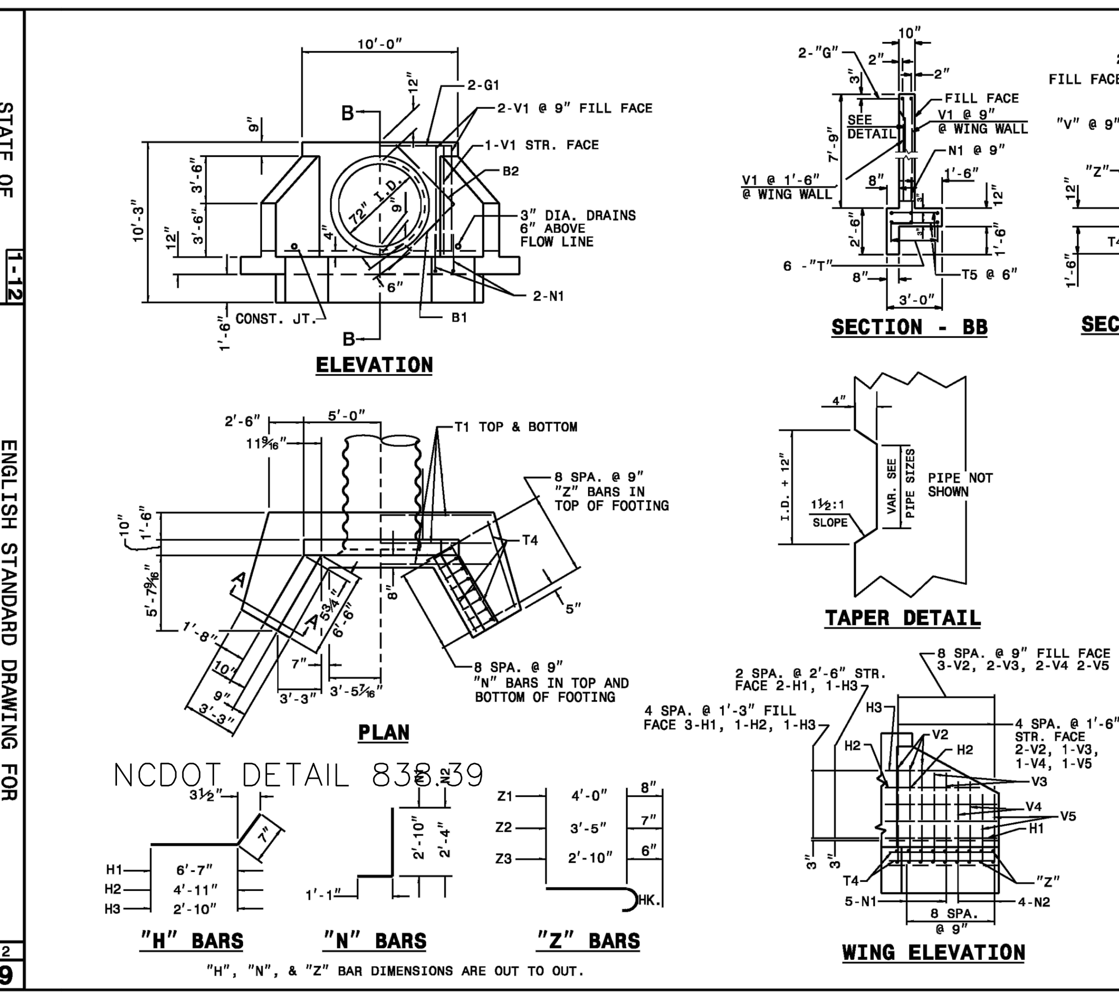

SEE STD.# 838.45 FOR GENERAL NOTES.

BILL OF MATERIAL FOR ENDWALL				
REINF. STEEL			1 PIPE	
BAR	SIZE	LENGTH	NO.	WEIGHT
B1	#4	5'-6"	4	15
B2	#4	4'-6"	4	12
G1	#7	9'-8"	2	40
H1	#4	7'-2"	10	48
H2	#4	5'-6"	2	7
H3	#4	3'-5"	4	9
N1	#5	3'-11"	14	57
N2	#4	3'-5"	8	18
T1	#4	14'-6"	6	58
T4	#4	6'-9"	6	27
T5	#4	2'-6"	40	67
V1	#4	7'-3"	6	29
V2	#4	5'-10"	10	39
V3	#4	5'-0"	6	20
V4	#4	4'-1"	6	16
V5	#4	3'-2"	6	13
Z1	#6	4'-8"	6	42
Z2	#5	4'-0"	6	25
Z3	#4	3'-4"	6	13
REINF. STEEL LBS.				555
CON./C.S. CU. YDS			7.5	

SHEET 2 OF 2
838.39

2808AG_ _X — 8" CUSTOM DRAIN BASIN

GRATE OPTIONS	LOAD RATING	PART #	DRAWING #
STANDARD	LIGHT DUTY	0899CGS	7001-110-194
SOLID COVER	LIGHT DUTY	0899CGC	7001-110-195
BRONZE	N/A	0899CGB	7001-110-196
DOME	N/A	0899CGD	7001-110-197
DROP IN GRATE	LIGHT DUTY	0801DI	7001-110-019

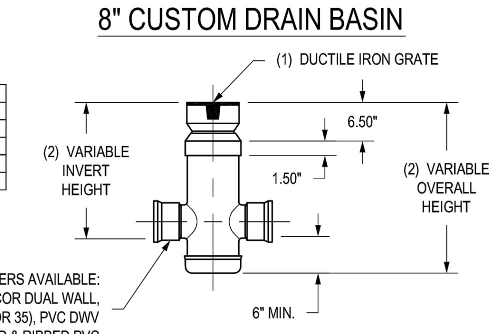

(3,4) VARIOUS TYPES OF INLET & OUTLET ADAPTERS AVAILABLE: 4" - 8" FOR CORRUGATED HDPE (ADS N-12/HANCOR DUAL WALL, ADS/HANCOR SINGLE WALL), PVC SEWER (EX: SDR 35), PVC DWV (EX: SCH 40), PVC C900/C905, CORRUGATED & RIBBED PVC

*OR EQUIVALENT

2810AG_ _X — 10" CUSTOM DRAIN BASIN

GRATE OPTIONS	LOAD RATING	PART #	DRAWING #
STANDARD	LIGHT DUTY	1099CGS	7001-110-198
SOLID COVER	LIGHT DUTY	1099CGC	7001-110-199
BRONZE	N/A	1099CGB	7001-110-200
DOME	N/A	1099CGD	7001-110-201
DROP IN GRATE	LIGHT DUTY	1001DI	7001-110-020

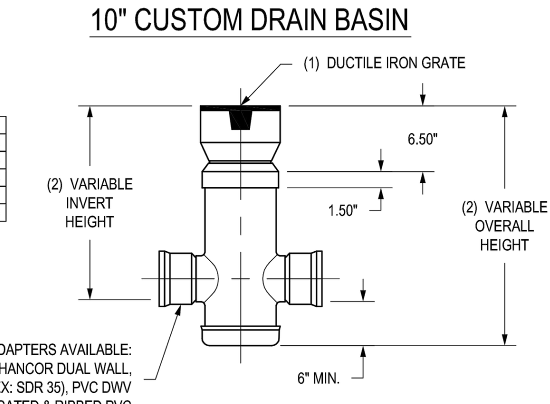

(3,4) VARIOUS TYPES OF INLET & OUTLET ADAPTERS AVAILABLE: 4" - 10" FOR CORRUGATED HDPE (ADS N-12/HANCOR DUAL WALL, ADS/HANCOR SINGLE WALL), PVC SEWER (EX: SDR 35), PVC DWV (EX: SCH 40), PVC C900/C905, CORRUGATED & RIBBED PVC

1 - GRATES/SOLID COVER SHALL BE DUCTILE IRON PER ASTM A536 GRADE 70-50-05, WITH THE EXCEPTION OF THE BRONZE GRATE.
2 - CUSTOM DRAIN BASIN TO BE CUSTOM MANUFACTURED ACCORDING TO PLAN DETAILS. RISERS ARE NEEDED FOR BASINS OVER 84" DUE TO SHIPPING RESTRICTIONS. SEE DRAWING NO. 7001-110-065
3 - DRAINAGE CONNECTION STUB JOINT TIGHTNESS SHALL CONFORM TO ASTM D3212 FOR CORRUGATED HDPE (ADS & HANCOR DUAL WALL) & SDR 35 PVC
4 - STANDARD DRAIN BASIN HAS FIXED ADAPTER LOCATIONS OF 0° & 180°. CUSTOM DRAIN BASIN ADAPTERS CAN BE MOUNTED ON ANY ANGLE 0° TO 360°. TO DETERMINE MINIMUM ANGLE BETWEEN ADAPTERS SEE DRAWING NO. 7001-110-012.
5 - DIMENSIONS ARE FOR REFERENCE ONLY ACTUAL DIMENSIONS MAY VARY

THIS PRINT DISCLOSES SUBJECT MATTER IN WHICH NYLOPLAST HAS PROPRIETARY RIGHTS. THE RECEIPT OR POSSESSION OF THIS PRINT DOES NOT CONFER, TRANSFER, OR LICENSE THE USE OF THE DESIGN OR TECHNICAL INFORMATION SHOWN HEREIN REPRODUCTION OF THIS PRINT OR ANY INFORMATION CONTAINED HEREIN, OR MANUFACTURE OF ANY ARTICLE HEREFROM, FOR THE DISCLOSURE TO OTHERS IS FORBIDDEN, EXCEPT BY SPECIFIC WRITTEN PERMISSION FROM NYLOPLAST. ©2010 NYLOPLAST

DRAWN BY AWA	MATERIAL	Nyloplast — 3130 VERONA AVE, BUFORD, GA 30518, PHN (770) 932-2443, FAX (770) 932-2490, www.nyloplast-us.com
DATE 8-11-00		
REVISED BY EBC	PROJECT NO./NAME	TITLE: 8 IN & 10 IN DRAIN BASIN DESIGN DETAILS
DATE 3-18-10		
DWG SIZE A	SCALE NTS SHEET 1 OF 1	DWG NO. 7001-110-045 REV G

Dimensional Reference	Pipe Diameter (in)					
	12	15	18	24	30	36
A (in)	42	42	59	59	82	82
B (in)	14	17	21	27	34	41
C (in)	34	34	48	48	58	58
D (in)	6	6	6	6	6	6

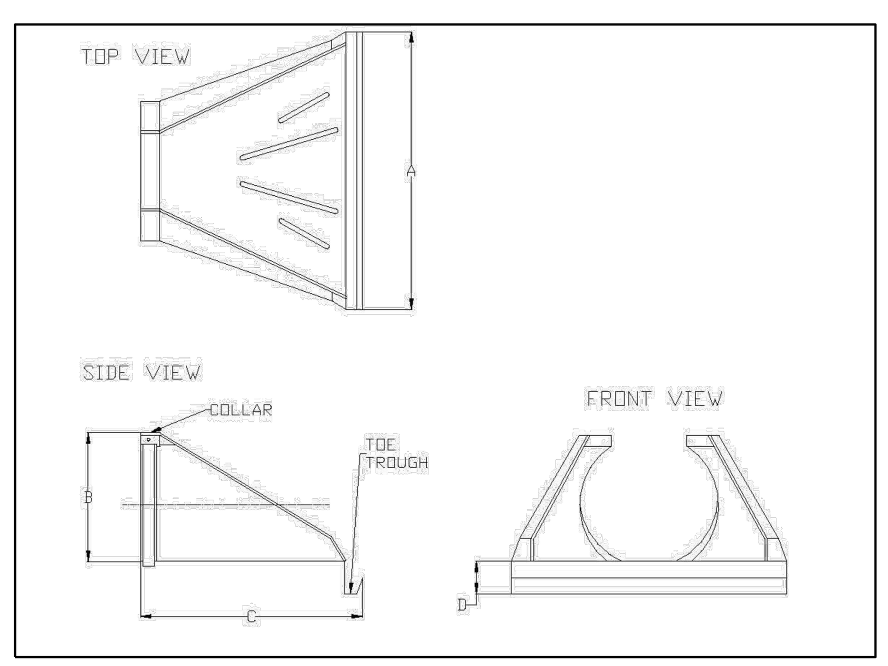

FLARED END SECTION DETAIL

N.T.S.

For each open utility cut of City streets, a $325 permit shall be required from the City prior to occupancy and/or project acceptance.

Approved Construction Plan	Name	Date
Planning		
Traffic		
Fire		

CITY OF WILMINGTON NORTH CAROLINA
Public Services • Engineering Division
APPROVED STORMWATER MANAGEMENT PLAN
Date:__________ Permit #______________
Signed: ______________________________

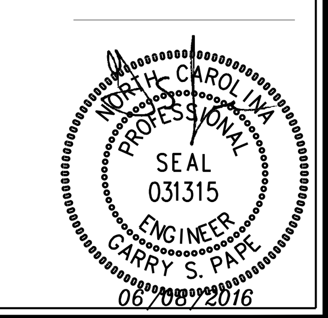

No.	Revision	Date	By

Designer GSP	Scale 1" = 30'
Drawn By GSP	Date February 2016
License # P-0718	Job No. 2016-0002

OLEANDER STORAGE II

Wilmington New Hanover County North Carolina

STANDARD DETAILS

PREPARED FOR:
Penton Storage, LLC
6105 Oleander Drive
Suite 201
Wilmington, NC 28403

GSP CONSULTING, PLLC
ENGINEERING
6626 Gordon Road Unit C Wilmington, North Carolina 28411 tel: 910-442-7870 fax: 910-799-6659

Sheet No. **C-9**

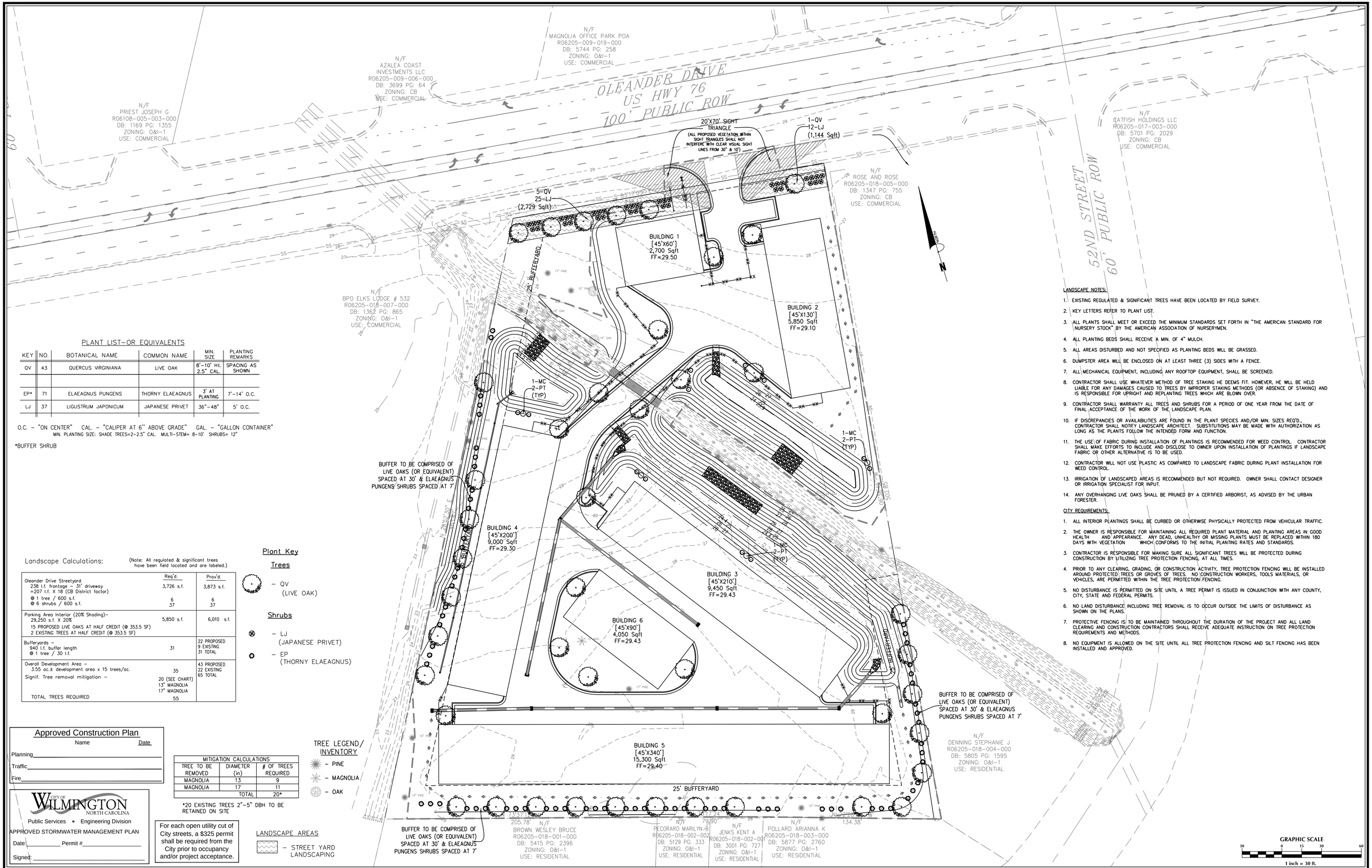

PLANT LIST–OR EQUIVALENTS

KEY	NO.	BOTANICAL NAME	COMMON NAME	MIN. SIZE	PLANTING REMARKS
QV	43	QUERCUS VIRGINIANA	LIVE OAK	8'-10' Ht. 2.5" CAL.	SPACING AS SHOWN
EP*	71	ELAEAGNUS PUNGENS	THORNY ELAEAGNUS	3' AT PLANTING	7'-14" O.C.
LJ	37	LIGUSTRUM JAPONICUM	JAPANESE PRIVET	36"-48"	5' O.C.

O.C. – "ON CENTER" CAL. – "CALIPER AT 6" ABOVE GRADE" GAL. – "GALLON CONTAINER"
MIN. PLANTING SIZE: SHADE TREES=2-2.5" CAL. MULTI-STEM= 8-10' SHRUBS= 12"

*BUFFER SHRUB

Landscape Calculations:

(Note: All regulated & significant trees have been field located and are labeled.)

	Req'd.	Prov'd.
Oleander Drive Streetyard 238 l.f. frontage – 31' driveway =207 l.f. X 18' (CB District factor) @ 1 tree / 600 s.f. @ 6 shrubs / 600 s.f.	3,726 s.f. 6 37	3,873 s.f. 6 37
Parking Area Interior (20% Shading)– 29,250 s.f. X 20% 15 PROPOSED LIVE OAKS AT HALF CREDIT (@ 353.5 SF) 2 EXISTING TREES AT HALF CREDIT (@ 353.5 SF)	5,850 s.f.	6,010 s.f.
Bufferyards – 940 l.f. buffer length @ 1 tree / 30 l.f.	31	22 PROPOSED 9 EXISTING 31 TOTAL
Overall Development Area – 3.55 ac.± development area x 15 trees/ac. Signif. Tree removal mitigation – TOTAL TREES REQUIRED	35 20 (SEE CHART) 13" MAGNOLIA 17" MAGNOLIA 55	43 PROPOSED 22 EXISTING 65 TOTAL

Plant Key

Trees

– QV (LIVE OAK)

Shrubs

– LJ (JAPANESE PRIVET)

– EP (THORNY ELAEAGNUS)

LANDSCAPE NOTES:

1. EXISTING REGULATED & SIGNIFICANT TREES HAVE BEEN LOCATED BY FIELD SURVEY.
2. KEY LETTERS REFER TO PLANT LIST.
3. ALL PLANTS SHALL MEET OR EXCEED THE MINIMUM STANDARDS SET FORTH IN "THE AMERICAN STANDARD FOR NURSERY STOCK" BY THE AMERICAN ASSOCIATION OF NURSERYMEN.
4. ALL PLANTING BEDS SHALL RECEIVE A MIN. OF 4" MULCH.
5. ALL AREAS DISTURBED AND NOT SPECIFIED AS PLANTING BEDS WILL BE GRASSED.
6. DUMPSTER AREA WILL BE ENCLOSED ON AT LEAST THREE (3) SIDES WITH A FENCE.
7. ALL MECHANICAL EQUIPMENT, INCLUDING ANY ROOFTOP EQUIPMENT, SHALL BE SCREENED.
8. CONTRACTOR SHALL USE WHATEVER METHOD OF TREE STAKING HE DEEMS FIT. HOWEVER, HE WILL BE HELD LIABLE FOR ANY DAMAGES CAUSED TO TREES BY IMPROPER STAKING METHODS (OR ABSENCE OF STAKING) AND IS RESPONSIBLE FOR UPRIGHT AND REPLANTING TREES WHICH ARE BLOWN OVER.
9. CONTRACTOR SHALL WARRANTY ALL TREES AND SHRUBS FOR A PERIOD OF ONE YEAR FROM THE DATE OF FINAL ACCEPTANCE OF THE WORK OF THE LANDSCAPE PLAN.
10. IF DISCREPANCIES OR AVAILABILITIES ARE FOUND IN THE PLANT SPECIES AND/OR MIN. SIZES REQ'D., CONTRACTOR SHALL NOTIFY LANDSCAPE ARCHITECT. SUBSTITUTIONS MAY BE MADE WITH AUTHORIZATION AS LONG AS THE PLANTS FOLLOW THE INTENDED FORM AND FUNCTION.
11. THE USE OF FABRIC DURING INSTALLATION OF PLANTINGS IS RECOMMENDED FOR WEED CONTROL. CONTRACTOR SHALL MAKE EFFORTS TO INCLUDE AND DISCLOSE TO OWNER UPON INSTALLATION OF PLANTINGS IF LANDSCAPE FABRIC OR OTHER ALTERNATIVE IS TO BE USED.
12. CONTRACTOR WILL NOT USE PLASTIC AS COMPARED TO LANDSCAPE FABRIC DURING PLANT INSTALLATION FOR WEED CONTROL.
13. IRRIGATION OF LANDSCAPED AREAS IS RECOMMENDED BUT NOT REQUIRED. OWNER SHALL CONTACT DESIGNER OR IRRIGATION SPECIALIST FOR INPUT.
14. ANY OVERHANGING LIVE OAKS SHALL BE PRUNED BY A CERTIFIED ARBORIST, AS ADVISED BY THE URBAN FORESTER.

CITY REQUIREMENTS:

1. ALL INTERIOR PLANTINGS SHALL BE CURBED OR OTHERWISE PHYSICALLY PROTECTED FROM VEHICULAR TRAFFIC.
2. THE OWNER IS RESPONSIBLE FOR MAINTAINING ALL REQUIRED PLANT MATERIAL AND PLANTING AREAS IN GOOD HEALTH AND APPEARANCE. ANY DEAD, UNHEALTHY OR MISSING PLANTS MUST BE REPLACED WITHIN 180 DAYS WITH VEGETATION WHICH CONFORMS TO THE INITIAL PLANTING RATES AND STANDARDS.
3. CONTRACTOR IS RESPONSIBLE FOR MAKING SURE ALL SIGNIFICANT TREES WILL BE PROTECTED DURING CONSTRUCTION BY UTILIZING TREE PROTECTION FENCING, AT ALL TIMES.
4. PRIOR TO ANY CLEARING, GRADING, OR CONSTRUCTION ACTIVITY, TREE PROTECTION FENCING WILL BE INSTALLED AROUND PROTECTED TREES OR GROVES OF TREES. NO CONSTRUCTION WORKERS, TOOLS MATERIALS, OR VEHICLES, ARE PERMITTED WITHIN THE TREE PROTECTION FENCING.
5. NO DISTURBANCE IS PERMITTED ON SITE UNTIL A TREE PERMIT IS ISSUED IN CONJUNCTION WITH ANY COUNTY, CITY, STATE AND FEDERAL PERMITS.
6. NO LAND DISTURBANCE INCLUDING TREE REMOVAL IS TO OCCUR OUTSIDE THE LIMITS OF DISTURBANCE AS SHOWN ON THE PLANS.
7. PROTECTIVE FENCING IS TO BE MAINTAINED THROUGHOUT THE DURATION OF THE PROJECT AND ALL LAND CLEARING AND CONSTRUCTION CONTRACTORS SHALL RECEIVE ADEQUATE INSTRUCTION ON TREE PROTECTION REQUIREMENTS AND METHODS.
8. NO EQUIPMENT IS ALLOWED ON THE SITE UNTIL ALL TREE PROTECTION FENCING AND SILT FENCING HAS BEEN INSTALLED AND APPROVED.

Approved Construction Plan

Name Date

Planning_____

Traffic_____

Fire_____

CITY OF WILMINGTON NORTH CAROLINA

Public Services • Engineering Division

APPROVED STORMWATER MANAGEMENT PLAN

Date:_____ Permit #_____

Signed: _____

For each open utility cut of City streets, a $325 permit shall be required from the City prior to occupancy and/or project acceptance.

MITIGATION CALCULATIONS		
TREE TO BE REMOVED	DIAMETER (in)	# OF TREES REQUIRED
MAGNOLIA	13	9
MAGNOLIA	17	11
	TOTAL	20*

*20 EXISTING TREES 2"-5" DBH TO BE RETAINED ON SITE

TREE LEGEND/ INVENTORY

– PINE

– MAGNOLIA

– OAK

LANDSCAPE AREAS

– STREET YARD LANDSCAPING

No.	Revision	Date	By

Designer GSP	Scale 1" = 30'
Drawn By GSP	Date February 2016
License # P-0718	Job No. 2016-0002

OLEANDER STORAGE II

Wilmington New Hanover County North Carolina

LANDSCAPE PLAN

PREPARED FOR:
Penton Storage, LLC
6105 Oleander Drive
Suite 201
Wilmington, NC 28403

GSP CONSULTING, PLLC
ENGINEERING
6626 Gordon Road Unit C Wilmington, North Carolina 28411 tel: 910-442-7870 fax: 910-799-6659

Sheet No. L-1