HALPERN DEVELOPMENT COMPANY, LLC

OGDEN MARKET PLACE

OFFSITE ROADWAY IMPROVEMENTS PROJECT

WILMINGTON, NEW HANOVER COUNTY, NORTH CAROLINA

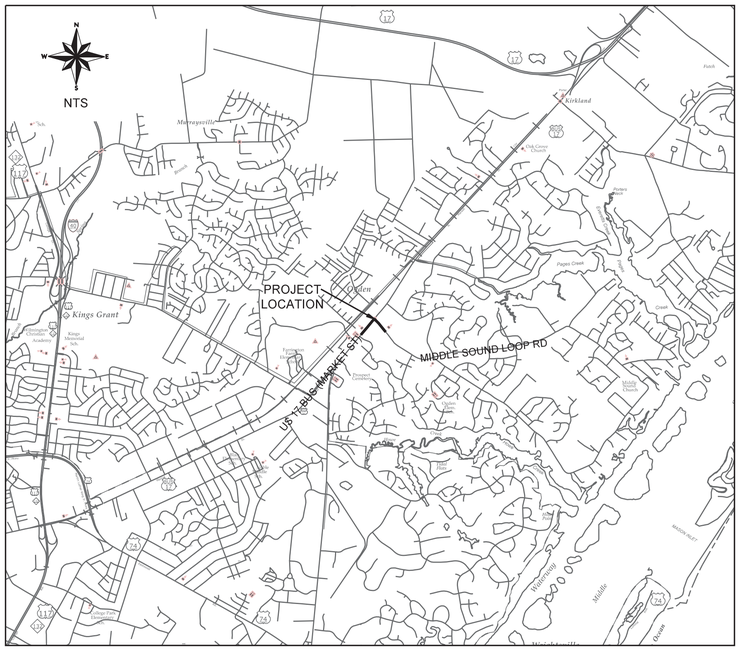

VICINITY MAP

NOT TO SCALE

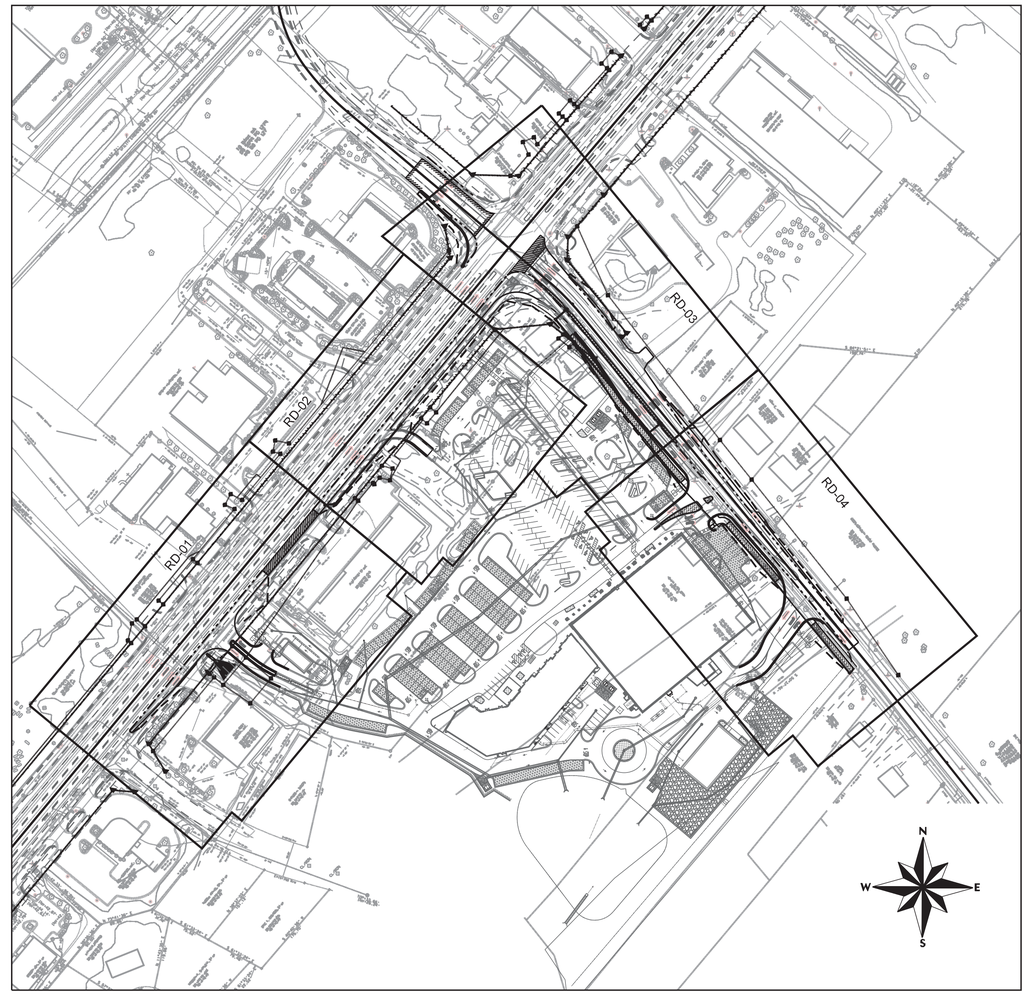

PROJECT LOCATION MAP

NOT TO SCALE

OWNER:

HALPERN DEVELOPMENT COMPANY, LLC
4799 NORTHSIDE DRIVE
ATLANTA, GA 30327
P: (404) 290-1975

CONTACT: CHARLIE WORTHEN

ENGINEER:

DAVENPORT
305 WEST FOURTH STREET, SUITE 2A
WINSTON-SALEM, NC 27101
P: (336) 744-1636

CONTACT: JOHN TOWNSEND, PE

SURVEY:

NCDOT
582 MAIL SERVICE CENTER
RALEIGH, NC 27699-1582
P: (919) 707-6200
F: (919) 250-4036

CONTACT: TATIA WHITE, PE

NOTES:

NCDOT STANDARD SPECIFICATIONS 2012 APPLY TO THESE PLANS.

ALL NECESSARY INSPECTIONS AND/OR CERTIFICATIONS REQUIRED BY CODES AND/OR UTILITY SERVICE COMPANIES SHALL BE PERFORMED PRIOR TO THE FINAL CONNECTIONS OF SERVICES.

ATTENTION IS DRAWN TO THE FACT THAT THE SCALE OF THESE DRAWINGS MAY HAVE BEEN DISTORTED DURING THE REPRODUCTION PROCESS.

THIS DOCUMENT, TOGETHER WITH THE CONCEPTS AND DESIGNS PRESENTED HEREIN, AS AN INSTRUMENT OF SERVICE, IS INTENDED ONLY FOR THE SPECIFIC PURPOSE AND CLIENT FOR WHICH IT WAS PREPARED. REUSE OF AND IMPROPER RELIANCE ON THIS DOCUMENT WITHOUT WRITTEN AUTHORIZATION AND ADAPTATION BY DAVENPORT TRANSPORTATION CONSULTING SHALL BE WITHOUT LIABILITY TO DAVENPORT TRANSPORTATION CONSULTING.

SHEET INDEX

CV-01	COVER SHEET
GN-01 - GN-02	GENERAL NOTES
TS-01 - TS-02	TYPICAL SECTIONS
RD-01 - RD-04	ROADWAY PLAN SHEET
PR-01	ROADWAY PROFILE SHEET
TC-01 - TC-07	TRAFFIC CONTROL PLANS
EC-01 - EC-06	EROSION CONTROL PLANS
PM-01 - PM-04	PAVEMENT MARKING AND SIGNING PLANS
XS-01 - XS-11	CROSS SECTIONS
UO-01 - UO-04	UTLITIES BY OTHERS

NORTH CAROLINA PROFESSIONAL SEAL 045033 ENGINEER JOHN G. TOWNSEND

FINAL

DAVENPORT
HOME OFFICE
305 WEST FOURTH STREET, SUITE 2A
WINSTON-SALEM, NC 27101
336.744.1636 www.davenportworld.com
NCBELS FIRM LICENSE NO. C-2522

PROJECT: 14-236
DATE: 07/26/16
DESIGNED BY: JGT
DRAWN BY: JGT
CHECKED BY: DRC
SCALE: AS NOTED

REVISIONS

NO.	DATE	DESCRIPTION

CLIENT: HALPERN DEVELOPMENT COMPANY, LLC
4799 NORTHSIDE DRIVE
ATLANTA, GA 30327
P: (404) 290-1975

PROJECT: OGDEN MARKET PLACE
WILMINGTON, NC

TITLE: COVER SHEET

SHEET NO. CV-01

THIS DOCUMENT, TOGETHER WITH THE CONCEPTS AND DESIGNS PRESENTED THEREIN, IS INTENDED ONLY FOR THE SPECIFIC PURPOSE AND CLIENT FOR WHICH IT WAS PREPARED. REUSE OF OR IMPROPER RELIANCE UPON THIS DOCUMENT BY OTHERS, WITHOUT WRITTEN AUTHORIZATION AND ADAPTATION BY DAVENPORT, SHALL BE WITHOUT LIABILITY TO DAVENPORT AND SHALL BE A VIOLATION OF THE AGREEMENT BETWEEN DAVENPORT AND ITS CLIENT.

GENERAL NOTES

STATEMENT OF WORK:
THIS PROJECT CONSISTS OF THE CONSTRUCTION OF A RIGHT TURN LANE ON MARKET STREET AT ITS INTERSECTION WITH MIDDLE SOUND LOOP ROAD AND WIDENING ON MIDDLE SOUND LOOP ROAD. SPECIFIC IMPROVEMENTS ARE DETAILED HEREIN.

GENERAL:
CONTRACTOR IS TO SCHEDULE AND COORDINATE WORK BY OTHERS.
CONTRACTOR SHALL VISIT THE SITE TO INFORM AND SATISFY HIMSELF OF ALL EXISTING CONDITIONS PRIOR TO SUBMITTING HIS BID. ANY DISCREPANCY BETWEEN THE SITE AND THOSE CONDITIONS REPRESENTED ON THE DRAWINGS SHALL BE BROUGHT TO THE ATTENTION OF THE OWNER AND THE ENGINEER IMMEDIATELY.

THE CONTRACTOR AGREES THAT HE SHALL ASSUME SOLE AND COMPLETE RESPONSIBILITY FOR JOB SITE CONDITIONS DURING THE COURSE OF CONSTRUCTION OF THIS PROJECT, INCLUDING SAFETY OF ALL PERSONS AND PROPERTY AND THAT THIS REQUIREMENT SHALL APPLY CONTINUOUSLY AND NOT BE LIMITED TO NORMAL WORKING HOURS AND THAT THE CONTRACTOR SHALL DEFEND, INDEMNIFY, AND HOLD THE OWNER AND THE ENGINEER HARMLESS FROM ANY AND ALL LIABILITY, REAL OR ALLEGED IN CONNECTION WITH PERFORMANCE OF WORK ON THIS PROJECT, EXCEPTING FOR LIABILITY ARISING FROM THE SOLE NEGLIGENCE OF THE OWNER OR THE ENGINEER.

THE CONTRACTOR SHALL VERIFY THAT ALL REQUIRED PERMITS AND APPROVALS HAVE BEEN OBTAINED FROM THE APPROPRIATE AUTHORITIES BEFORE BEGINNING WORK ON THE PROJECT.

CLEARING:
CLEARING ON THIS PROJECT SHALL BE PERFORMED TO THE LIMITS ESTABLISHED BY METHOD II.

SIDE ROADS:
THE CONTRACTOR WILL BE REQUIRED TO DO ALL NECESSARY WORK TO PROVIDE SUITABLE CONNECTIONS WITH ALL ROADS, STREETS AND DRIVES ENTERING THIS PROJECT. THIS WORK WILL BE PAID FOR AT THE CONTRACT UNIT PRICE FOR THE PARTICULAR ITEMS INVOLVED.

STREET TURNOUT:
STREET RETURNS SHALL BE CONSTRUCTED IN ACCORDANCE WITH NCDOT STD. NO. 848.04 USING RADII NOTED ON PLANS.

UTILITIES:
THE CONTRACTOR IS RESPONSIBLE FOR THE LOCATION AND PROTECTION OF ALL EXISTING UTILITIES DURING CONSTRUCTION. AT LEAST 48 HOURS PRIOR TO ANY DEMOLITION, GRADING, OR CONSTRUCTION ACTIVITY THE CONTRACTOR SHALL NOTIFY THE NORTH CAROLINA ONE-CALL UTILITIES LOCATION SERVICE AT 1-800-632-4949 FOR PROPER IDENTIFICATION OF EXISTING UTILITIES WITHIN THE PROJECT SITE.

THE CONTRACTOR IS RESPONSIBLE FOR THE REPAIR AND REPLACEMENT OF ANY UTILITIES DAMAGED DURING CONSTRUCTION. DAMAGED ITEMS SHALL BE REPAIRED TO AT LEAST THE QUALITY OF WORKMANSHIP FOUND IN THE ORIGINAL ITEM.

ANY RELOCATION OF EXISTING UTILITIES WILL BE ACCOMPLISHED BY OTHERS, EXCEPT AS SHOWN ON THE PLANS. CONTRACTOR IS RESPONSIBLE FOR ALL UTILITY COORDINATION.

SUBSURFACE:
NO SUBSURFACE INVESTIGATIONS OR PLANS ARE AVAILABLE FOR THIS PROJECT. THE CONTRACTOR SHOULD MAKE HIS OWN INVESTIGATION AS TO THE SUBSURFACE CONDITIONS.

PAVEMENT MARKINGS:
ALL PAVEMENT MARKINGS SHALL BE IN ACCORDANCE WITH NCDOT STANDARDS.
PAVEMENT MARKINGS SHALL BE THE RESPONSIBILITY OF THE CONTRACTOR. THE CONTRACTOR SHALL HAVE THE PAVEMENT MARKINGS PRE-MARKED, INSPECTED, AND APPROVED BY NCDOT PERSONNEL PRIOR TO THE PLACEMENT OF FINAL PAVEMENT MARKINGS.

SIGNING:
ALL TRAFFIC SIGNING SHALL BE IN ACCORDANCE WITH THE MANUAL ON UNIFORM TRAFFIC CONTROL DEVICES (MUTCD).

SIGN POST INSTALLATION SHALL BE IN ACCORDANCE WITH NCDOT STANDARDS.

SIGN HOLES ARE TO BE CORED TO SUBGRADE AND FILLED WITH SAND.

EROSION CONTROL:
DISTURBED AREA < 1.0 AC (AREA OF OFFSITE IMPROVEMENTS ONLY. DOES NOT INCLUDE THE AREA ALONG THE SITE FRONTAGE THAT IS INCLUDED IN THE SITE EROSION CONTROL.)

ALL CONTRACTORS AND SUBCONTRACTORS INVOLVED WITH STORM WATER POLLUTION PREVENTION SHALL OBTAIN A COPY OF THE EROSION CONTROL PLAN (ECP) AND THE STATE OF NORTH CAROLINA DEPARTMENT OF ENVIRONMENT AND NATURAL RESOURCES DIVISION OF WATER QUALITY GENERAL PERMIT TO DISCHARGE STORMWATER UNDER THE NATIONAL POLLUTANT DISCHARGE ELIMINATION SYSTEM (NPDES PERMIT) AND BECOME FAMILIAR WITH THEIR CONTENTS.

CONTRACTOR SHALL IMPLEMENT BEST MANAGEMENT PRACTICES AS REQUIRED BY THE ECP. ADDITIONAL BEST MANAGEMENT PRACTICES SHALL BE IMPLEMENTED AS DICTATED BY CONDITIONS AT NO ADDITIONAL COST TO OWNER THROUGHOUT ALL PHASES OF CONSTRUCTION.

BEST MANAGEMENT PRACTICES (BMP'S) AND CONTROLS SHALL CONFORM TO FEDERAL, STATE, OR LOCAL REQUIREMENTS OR NAMUAL OF PRACTICE, AS APPLICABLE. CONTRACTOR SHALL IMPLEMENT ADDITIONAL CONTROLS AS DIRECTED BY PERMITTING AGENCY OR OWNER.

CONTRACTOR SHALL MINIMIZE CLEARING TO THE MAXIMUM EXTENT PRACTICAL OR AS REQUIRED BY THE GENERAL PERMIT AS WELL AS LIMITED TO THE AREAS OF DISTURBANCE.

CONTRACTOR SHALL DENOTE ON PLAN THE TEMPORARY PARKING AND STORAGE AREA WHICH SHALL ALSO BE USED AS THE EQUIPMENT MAINTENANCE AND CLEANING AREA, EMPLOYEE PARKING AREA, AND AREA FOR LOCATING PORTABLE FACILITIES, OFFICE TRAILERS, AND TOILET FACILITIES.

ALL WASH WATER (CONCRETE TRUCKS, VEHICLE CLEANING, EQUIPMENT CLEANING, ETC.) SHALL BE DETATINED AND PROPERLY TREATED OR DISPOSED.

SUFFICIENT OIL AND GREASE ABSORBING MATERIALS AND FLOATATION BOOMS SHALL BE MAINTAINED ONSITE OR READILY AVAILABLE WITHIN A SPILL KIT TO CONTAIN AND CLEAN-UP FUEL OR CHEMICAL SPILLS AND LEAKS.

DUST ON THE SITE SHALL BE CONTROLLED. THE USE OF MOTOR OILS AND OTHER PETROLEUM BASED OF TOXIC LIQUIDS FOR DUST SUPPRESSION OPERATIONS IS PROHIBITED.

RUBBISH, TRASH, GARBAGE, LITTER, OR OTHER SUCH MATERIALS SHALL BE DEPOSITED INTO SEALED CONTAINERS. MATERIALS SHALL BE PREVENTED FROM LEAVING THE PREMISES THROUGH THE ACTION OF WIND OR STORMWATER DISCHARGE INTO DRAINAGE DITCHES OR JURISDICTIONAL WATERS.

ALL STORM WATER POLLUTION PREVENTION MEASURES PRESENTED ON THE EROSION CONTROL PLAN, SHALL BE INITIATED AS SOON AS PRACTICABLE.

DISTURBED PORTIONS OF THE SITE WHERE CONSTRUCTION ACTIVITY HAS STOPPED FOR AT LEAST 14 DAYS SHALL BE TEMPORARILY SEEDED. THESE AREAS SHALL BE SEEDED NO LATER THAN 14 DAYS FROM THE LAST CONSTRUCTION ACTIVITY OCCURING IN THESE AREAS.

DISTURBED PORTIONS OF THE SITE WHERE CONSTRUCTION ACTIVITY HAS PERMANENTLY STOPPED SHALL BE PERMANENTLY SEEDED. THESE AREAS SHALL BE SEEDED NO LATER THAN 14 DAYS AFTER THE LAST CONSTRUCTION ACTIVITY OCCURING IN THESE AREAS. REFER TO THE GRADING PLAN AND/OR LANDSCAPE PLAN.

IF THE ACTION OF VEHICLES TRAVELING OVER THE GRAVEL CONSTRUCTION ENTRANCES IS NOT SUFFICIENT TO REMOVE THE MAJORITY OF DIRT OF MUD, THEN THE TIRES MUST BE WASHED BEFORE THE VEHICLES ENTER A PUBLIC ROAD. IF WASHING IS USED, PROVISIONS MUST BE MADE TO INTERCEPT THE WASH WATER AND TRAP THE SEDIMENT BEFORE IT IS CARRIED OFF THE SITE. WASH WATER MUST BE DISPOSED OF PROPERLY.

ALL MATERIALS SPILLED, DROPPED WASHED, OR TRACKED FROM VEHICLES ONTO ROADWAYS OR INTO STORM DRAINS MUST BE REMOVED IMMEDIATELY. SEDIMENT SHALL BE REMOVED FROM THE ROADS BY SHOVELING OR SWEEPING AND TRANSPORTED TO A SEDIMENT CONTROL DISPOSAL AREA. STREET WASHING SHALL BE ALLOWED ONLY AFTER SEDIMENT IS REMOVED IN THIS MANNER.

CONTRACTORS OR SUBCONTRACTORS WILL BE RESPONSIBLE FOR REMOVING SEDIMENT FROM THE EROSION CONTROL BASINS AND ANY SEDIMENT THAT MAY HAVE COLLECTED IN THE STORM SEWER DRAINAGE SYSTEMS IN CONJUNCTION WITH THE STABILIZATION OF THE SITE.

SLOPES SHALL BE LEFT IN A ROUGHENED CONDITION DURING THE GRADING PHASE TO REDUCE RUNOFF VELOCITIES AND EROSION.

DUE TO THE GARDE CHANGES DURING THE DEVELOPMENT OF THE PROJECT, THE CONTRACTOR SHALL BE RESPONSIBLE FOR ADJUSTING THE EROSION CONTROL MEASURES (SILT FENCES, DIVERSION DITCHES, ETC.) TO PREVENT EROSION.

ALL CONSTRUCTION SHALL BE STABILIZED AT THE END OF EACH WORKING DAY.

THE CONTRACTOR SHALL INSTALL AND MAINTAIN THROUGHOUT THE PROJECT CONSTRUCTION ALL EROSION CONTROL MEASURES SHOWN WITHIN THESE PLANS IN ACCORDANCE WITH APPLICABLE NCDENR EROSION AND SEDIMENT CONTROL REGULATIONS.

ALL EROSION CONTROL MEASURES SHALL BE CONSTRUCTED IN ACCORDANCE WITH THE NCDENR EROSION AND SEDIMENT CONTROL REGULATIONS, U.S. DEPARTMENT OF AGRICULTURE, AND U.S. SOIL CONSERVATION SERVICE REGULATIONS.

THE CONTRACTOR SHALL DILIGENTLY AND CONTINUOUSLY MAINTAIN ALL EROSION CONTROL DEVICES AND STRUCTURES TO MINMIZE EROSION. THE CONTRACTOR SHALL MAINTAIN CLOSE CONTACT WITH THE INSPECTOR SO THAT PERIODIC INSPECTIONS CAN BE PERFORMED AT APPROPRIATE STAGES OF CONSTRUCTION.

APPROVAL OF THIS PLAN IS NOT AN AUTHORIZATION TO GRADE ADJACENT PROPERTIES. WHEN FIELD CONDITIONS WARRANT OFF-SITE GRADING, PERMISSION MUST BE OBTAINED FROM THE AFFECTED PROPERTY OWNERS. CONTACT PROJECT ENGINEER AND PROJECT EROSION CONTROL INSPECTOR TO ENSURE ADDITIONAL EROSION CONTROL MEASURES ARE INSTALLED PRIOR TO OFF-SITE GRADING.

STABILIZATION IS THE BEST FORM OF EROSION CONTROL. ALL DISTURBED AREAS WHICH ARE NOT OTHERWISE STABILIZED SHALL BE TOP SOILED AND SEEDED, TEMPORARILY OR PERMANENTLY IN ACCORDANCE WITH THE NCDENR.

PERMANENT SEEDING AND GRASS ESTABLISHMENT IS REQUIRED PRIOR TO PROJECT COMPLETION AND ACCEPTANCE.

ALL TEMPORARY EROSION AND SEDIMENT CONTROL MEASURES SHALL BE REMOVED WITHIN 15 DAYS AFTER FINAL SITE STABILIZATION OR AFTER THE TEMPORARY MEASURES SHALL BE PERMANENTLY STABILIZED TO PREVENT FURTHER EROSION AND SEDIMENTATION.

WHEN A CRUSHED STONE CONSTRUCTION ENTRANCE HAS BEEN COVERED WITH SOIL OR HAS BEEN PUSHED INTO THE SOIL BY CONSTRUCTION TRAFFIC, IT SHALL BE REPLACED WITH A DEPTH OF STONE EQUAL TO THAT OF THE ORIGINAL APPLICATION.

SEDIMENT BASINS, PERIMETER DIKES, SEIMENT BARRIERS AND OTHER MEASURES INTENDED TO TRAP SEDIMENT SHALL BE CONSTRUCTED AS A FIRST STEP IN ANY LAND-DISTURBING ACTIVITY AND SHALL BE MADE FUNCTIONAL BEFORE UPSLOPE LAND DISTURBANCE TAKES PLACE.

STABILIZATION MEASURES SHALL BE APPLIED TO STRUCTURES SUCH AS DAMS, DIKES AND DIVERSIONS IMMEDIATELY AFTER INSTALLATION.

LIMITS OF GRADING SHOWN ON THE PLAN ARE MAXIMUM LIMITS FOR EROSION CONTROL PURPOSES ONLY.

ANY GRADING BEYOND THE DISTURBED LIMITS SHOWN ON THE PLAN IS A VIOLATION OF THE NORTH CAROLINA EROSION CONTROL ORDINANCE, AND IS SUBJECT TO A FINE.

GRADING MORE THAN ONE ACRE WITHOUT AN APPROVED EROSION CONTROL PLAN IS A VIOLATION OF THE NORTH CAROLINA EROSION CONTROL ORDINANCE AND IS SUBJECT TO A FINE.

SLOPES SHALL BE GRADED NO STEEPER THAT 2:1, UNLESS OTHERWISE SPECIFIED.

ON-SITE BURIAL PITS REQUIRE AN ON-SITE DEMOLITION LANDFILL PERMIT FROM THE ZONING ADMINISTRATOR.

IF NECESSARY, SLOPES THAT EXCEED EIGHT (8) VERTICAL FEET SHOULD BE STABILIZED WITH SYNTHETIC OR VEGETATIVE MATS, IN ADDITION TO HYDROSEEDING. IT MAY BE NECESSARY TO INSTALL TEMPORARY SLOPE DRAINS DURING CONSTRUCTION. TEMPORARY BERMS MAY BE NEEDED UNTIL THE SLOPE IS BROUGHT TO GRADE.

STABILIZATION MEASURES SHALL BE INITIATED AS SOON AS PRACTICABLE IN PORTIONS OF THE SITE WHERE CONSTRUCTION ACTIVITIES HAVE TEMPORARILY OR PERMANENTLY CEASED, BUT IN NO CASE MORE THAN FOURTEEN (14) DAYS AFTER WORK HAS CEASED, UNLESS ACTIVITY IN THAT PORTION OF THE SITE WILL RESUME WITHIN FOURTEEN (14) DAYS.

ALL SEDIMENT AND EROSION CONTROL DEVICES SHALL BE INSPECTED WEEKLY AND AFTER EACH RAINFALL OCCURRENCE THAT EXCEEDS ONE-HALF (1/2) INCH. DAMAGED OR INEFFECTIVE DEVICES SHALL BE REPAIRED OR REPLACED, AS NECESSARY.

PROVIDE SILT FENCE AND/OR OTHER CONTROL DEVICES, AS MAY BE REQUIRED, TO CONTROL SOIL EROSION DURING UTILITY CONSTRUCTION. ALL DISTURBED AREAS SHALL BE CLEANED, GRADED, AND STABILIZED WITH GRASSING IMMEDIATELY AFTER THE UTILITY INSTALLATION.

ALL EROSION CONTROL DEVICES SHALL BE PROPERLY MAINTAINED DURING ALL PHASES OF CONSTRUCTION UNTIL THE COMPLETION OF ALL CONSTRUCTION ACTIVITIES AND DISTURBED AREAS HAVE BEEN STABILIZED. ADDITIONAL CONTROL DEVICES MAY BE REQUIRED DURING CONSTRUCTION IN ORDER TO CONTROL EROSION AND/OR OFFSITE SEDIMENTATION. ALL TEMPORARY CONTROL SHALL BE REMOVED ONCE CONSTRUCTION IS COMPLETE AND THE SITE IS STABILIZED.

THE CONTRACTOR MUST TAKE NECESSARY ACTION TO MINIMIZE THE TRACKING OF MUD ONTO THE PAVED ROADWAY CONSTRUCTION AREAS. THE CONTRACTOR SHALL DAILY REMOVE MUD/SOIL FROM PAVEMENT, AS MAY BE REQUIRED.

TEMPORARY DEVERSION BERMS AND/OR DITCHES WILL BE PROVIDED AS NEEDED DURING CONSTRUCTION TO PROTECT WORK AREAS FROM UPSLOPE RUNOFF AND/OR EIVERT SEDIMENT - LADEN WATER TO APPROPRIATE TRAPS OR STABLE OUTLETS. TEMPORARY SEDIMENT BASIN MUST BE MAINTAINED PRIOR TO TRANSITIONING TO PERMANENT DRY OR WET BASINS.

ANY STOCKPILING OF SOIL ON PAVED SURFACES SHALL HAVE SAND AND/OR ROCK SCREENINGS UNDERNEATH AREA.

ANY AREAS USED FOR STAGING OR STOCKPILING OUTSIDE OF PERMITTED LIMITS WILL REQUIRE A SEPARATE EROSION CONTROL PLAN.

INLET PROTECTION IS REQUIRED FOR ALL PHASES OF THE PROJECT.

INLET PROTECTION IS REQUIRED FOR ALL INLETS LOCATED IN THE WORKING AREA.

OUTLET PROTECTION IS REQUIRED FOR ALL OUTLETS LOCATED IN THE WORKING AREA.

ADDITIONAL CONSTRUCTION ENTRANCES MAY BE REQUIRED BASED ON FIELD CONDITIONS.

ADDITIONAL SILT FENCING AND EROSION CONTROL MEASURES MAY BE REQUIRED BASED ON FIELD CONDITIONS.

ANY OFFSITE BORROW MATERIAL REQUIRED FOR THIS PROJECT MUST COME FROM A SITE WITH AN APPROVED EROSION CONTROL PLAN.

MAINTENANCE:
ALL MEASURES STATED ON THE EROSION AND SEDIMENTATION CONTROL PLAN SHALL BE MAINTAINED IN FULLY FUNCTIONAL CONDITION UNTIL NO LONGER REQUIRED FOR A COMPLETED PHASE OF WORK OR FINAL STABILIZATION OF THE SITE. ALL EROSION AND SEDIMENTATION CONTROL MEASURES SHALL BE CHECKED BY A QUALIFIED PERSON IN ACCORDANCE WITH THE CONTRACT DOCUMENTS OR THE APPLICABLE PERMIT, WHICHEVER IS MORE STRINGENT, AND REPAIRED IN ACCORDANCE WITH THE FOLLOWING:

INLET PROTECTION DEVICES AND BARRIERS SHALL BE REPAIRED OR REPLACED IF THEY SHOW SIGNS OF UNDERMINING, OR DETERIORATION.

ALL SEEDED AREAS SHALL BE CHECKED REGULARLY TO SEE THAT A GOOD STAND IS MAINTAINED. AREAS SHOULD BE FERTILIZED, WATERED, AND RESEEDED AS NEEDED.

SILT FENCES SHALL BE REPAIRED TO THEIR ORIGINAL CONDITIONS IF DAMAGED. SEDIMENT SHALL BE REMOVED FROM THE SILT FENCES WHEN IT REACHES ONE-HALF THE HEIGHT OF THE SILT FENCE.

THE CONSTRUCTION ENTRANCES SHALL BE MAINTAINED IN A CONDITION WHICH WILL PREVENT TRACKING OF FLOW OF MUD ONTO PUBLIC RIGHTS-OF-WAY. THIS MAY REQUIRE PERIODIC TOP DRESSING OF THE CONSTRUCTION ENTRANCES AS CONDITIONS DEMAND.

THE TEMPORARY PARKING AND STORAGE AREA SHALL BE KEPT IN GOOD CONDITION (SUITABLE FOR PARKING AND STORAGE). THIS MAY REQUIRE PERIODIC TOP DRESSING OF THE TEMPORARY PARKING AS CONDITIONS DEMAND.
OUTLET STRUCTURES IN THE SEDIMENTATION BASINS SHALL BE MAINTAIANED IN OPERATIONAL CONDITIONS AT ALL TIMES. SEDIMENT SHALL BE REMOVED AND DISPOSED OF PROPERLY FROM SEDIMENT BASINS WHEN THE DESIGN CAPACITY HAS BEEN REDUCED BY 50%.

CONTRACTOR SHALL MAINTAIN AN EROSION CONTROL INSPECTION AND MAINTENANCE LOG ON SITE IN COMPLIANCE WITH NCDENR REQUIREMENTS.

SEQUENCE

PHASE ONE
1. OBTAIN GRADING/EROSION CONTROL PLAN APPROVAL FROM NCDENR.
2. SET UP AN ON-SITE PRE-CONSTRUCTION CONFERENCE WITH THE EROSION CONTROL INSPECTOR TO DISCUSS EROSION CONTROL MEASURES.
3. INSTALL EROSION CONTROL MEASURES.
4. CALL FOR ON-SITE INSPECTION BY INSPECTOR. WHEN APPROVED, INSPECTOR ISSUES THE GRADING PERMIT AND CLEARING AND GRUBBING MAY BEGIN.
5. CONTRACTOR SHALL DILIGENTLY AND CONTINUOUSLY MAINTAIN ALL EROSION CONTROL DEVICES AND STRUCTURES.
6. CONTRACTOR SHALL MEET WITH THE EROSION CONTROL INSPECTOR PRIOR TO COMMENCING WITH PHASE TWO OF EROSION CONTROL MEASURES.

PHASE TWO
1. OBTAIN PHASE ONE EROSION CONTROL APPROVAL.
2. CONSTRUCTION PHASING TO FOLLOW TRAFFIC CONTROL PLAN.
3. CONTRACTOR SHALL DILIGENTLY AND CONTINUOUSLY MAINTAIN ALL EROSION CONTROL DEVICES AND STRUCTURES.
4. STABILIZE SLOPES AS AREAS ARE BROUGHT TO FINISHED GRADE.

SEEDING AND MULCHING NOTES:

SEEDBED PREPARATION:
CHISEL COMPACTED AREAS AND SPREAD TOPSOIL 3 INCHES DEEP OVER ADVERSE SOIL CONDITIONS, IF AVAILABLE.

RIP THE ENTIRE AREA TO 6 INCHES DEPTH.

REMOVE ALL LOOSE, ROCK, ROOTS AND OTHER OBSTRUCTIONS LEAVING SURFACE REASONABLE SMOOTH AND UNIFORM.

APPLY AGRICULTURAL LIME, FERTILIZER AND SUPERPHOSPHATE UNIFORMLY AND MIX WITH SOIL (SEE BELOW*).

CONTINUE TILLAGE UNTIL A WELL PULVERIZED, FIRM REASONABLE UNIFORM SEEDBED IS PREPARED, 4 TO 6 INCHES DEEP.

SEED ON A FRESHLY PREPARED SEEDBED AND COVER SEEDING. SEED LIGHTLY WITH SEEDING EQUIPMENT OR CULTIPACK AFTER.

MULCH IMMEDIATELY AFTER SEEDING AND ANCHOR MULCH.

INSPECT ALL SEEDED AREAS AND MAKE NECESSARY REPAIRS OR RESEEDINGS WITHIN THE PLANTING SEASON, IF POSSIBLE. IF THE STAND SHOULD BE OVER 60% DAMAGED, REESTABLISH FOLLOWING ORIGINAL LIME, FERTILIZER AND SEEDING RATES.

CONSULT CONSERVATION INSPECTOR ON MAINTENANCE TREATMENT AND FERTILIZATION AFTER PERMANENT COVER IS ESTABLISHED.

TABLE 6.10a
TEMPORARY SEEDING RECOMMENDATIONS FOR LATE WINTER AND EARLY SPRING

SEEDING MIXTURE

SPECIES	RATE (LB/ACRE)
RYE (GRAIN)	120
ANNUAL LESPEDEZA (KOBE IN PIEDMONT AND COASTAL PLAIN, KOREAN IN MOUNTAINS)	50

OMIT ANNUAL LESPEDEZA WHEN DURATION OF TEMPORARY COVER IS NOT TO EXTEND BEYOND JUNE.

SEEDING DATES

MOUNTAINS:	ABOVE 2500 FT: FEB. 15-MAY 15 BELOW 2500 FT: FEB. 1-MAY 1
PIEDMONT:	JAN. 1-MAY 1
COASTAL PLAIN:	DEC. 1-APR.15

SOIL AMENDMENTS
FOLLOW RECOMMENTDATIONS OF SOIL TESTS OR APPLY 2,000 LB/ACRE GROUND AGRICULTURAL LIMESTONE AND 750 LB/ACRE 10-10-10 FERTILIZER.

MULCH
APPLY 4,000 LB/ACRE STRAW. ANCHOR STRAW BY TACKING WITH ASPHALT, NETTING, OR A MULCH ANCHORING TOOL. A DISK WITH BLADES SET NEARLY STRAIGHT CAN BE USED AS A MULCH ANCHORING TOOL.

MAINTENANCE
REFERTILIZE IF GROWTH IS NOT FULLY ADEQUATE. RESEED, REFERTILIZE AND MULCH IMMEDIATELY FOLLOWING EROSION OR OTHER DAMAGE.

THE ABOVE TABLE WAS TAKEN FROM THE NORTH CAROLINA EROSION AND SEDIMENT CONTROL PLANNING AND DESIGN MANUAL.

NORTH CAROLINA PROFESSIONAL ENGINEER SEAL 031633 JOHN G. TOWNSEND

FINAL

DAVENPORT
HOME OFFICE
305 WEST FOURTH STREET, SUITE 2A
WINSTON-SALEM, NC 27101
336.744.1636 www.davenportworld.com
NCBELS FIRM LICENSE NO. C-2522

PROJECT: 14-236
DATE: 07/2616
DESIGNED BY: JGT
DRAWN BY: JGT
CHECKED BY: DRC
SCALE: AS NOTED

NO.	DATE	REVISIONS DESCRIPTION

CLIENT: **HALPERN DEVELOPMENT COMPANY, LLC**
4799 NORTHSIDE DRIVE
ATLANTA, GA 30327
P: (404) 290-1975

PROJECT: **OGDEN MARKET PLACE WILMINGTON, NC**

TITLE: **GENERAL NOTES**

SHEET NO.
GN-01

THIS DOCUMENT, TOGETHER WITH THE CONCEPTS AND DESIGNS PRESENTED THEREIN, IS INTENDED ONLY FOR THE SPECIFIC PURPOSE AND CLIENT FOR WHICH IT WAS PREPARED. REUSE OF OR IMPROPER RELIANCE UPON THIS DOCUMENT BY OTHERS, WITHOUT WRITTEN AUTHORIZATION AND ADAPTATION BY DAVENPORT, SHALL BE WITHOUT LIABILITY TO DAVENPORT AND SHALL BE A VIOLATION OF THE AGREEMENT BETWEEN DAVENPORT AND ITS CLIENT.

GENERAL NOTES (CONTINUED)

TABLE 6.10b
TEMPORARY SEEDING RECOMMENDATIONS FOR SUMMER

SEEDING MIXTURE

SPECIES	RATE (LB/ACRE)
GERMAN MILLET	40

IN THE PEIDMONT AND MOUNTAINS, A SMALL-STEMMED SUDANGRASS MAY BE SUBSTITUTED AT A RATE OF 50 LB/ACRE.

SEEDING DATES

MOUNTAINS:	MAY 15-AUG. 15
PIEDMONT:	MAY 1-AUG. 15
COASTAL PLAIN:	APR. 15-AUG. 15

SOIL AMENDMENTS
FOLLOW RECOMMENDATIONS OF SOIL TESTS OR APPLY 2,000 LB/ACRE GROUND AGRICULTURAL LIMESTONE AND 750 LB/ACRE 10-10-10 FERTILIZER.

MULCH
APPLY 4,000 LB/ACRE STRAW. ANCHOR STRAW BY TACKING WITH ASPHALT, NETTING, OR A MULCH ANCHORING TOOL. A DISK WITH BLADES SET NEARLY STRAIGHT CAN BE USED AS A MULCH ANCHORING TOOL.

MAINTENANCE
REFERTILIZE IF GROWTH IS NOT FULLY ADEQUATE. RESEED, REFERTILIZE AND MULCH IMMEDIATELY FOLLOWING EROSION OR OTHER DAMAGE.

THE ABOVE TABLE WAS TAKEN FROM THE NORTH CAROLINA EROSION AND SEDIMENT CONTROL PLANNING AND DESIGN MANUAL.

TABLE 6.10c
TEMPORARY SEEDING RECOMMENDATIONS FOR FALL

SEEING MIXTURE

SPECIES	RATE (LB/ACRE)
RYE (GRAIN)	120

SEEDING DATES

MOUNTAINS:	AUG. 15-DEC. 15
PIEDMONT:	AUG.15-DEC. 30
COASTAL PLAIN:	AUG. 15-DEC. 30

SOIL AMENDMENTS
FOLLOW RECOMMENDATIONS OF SOIL TESTS OR APPLY 2,000 LB/ACRE GROUND AGRICULTURAL LIMESTONE AND 1000 LB/ACRE 10-10-10 FERTILIZER.

MULCH
APPLY 4,000 LB/ACRE STRAW. ANCHOR STRAW BY TACKING WITH ASPHALT, NETTING, OR A MULCH ANCHORING TOOL. A DISK WITH BLADES SET NEARLY STRAIGHT CAN BE USED AS A MULCH ANCHORING TOOL.

MAINTENANCE
REPAIR AND REFERTILIZE DAMAGED AREAS IMMEDIATELY. TOPDRESS WITH 50 LB/ACRE OF NITROGEN IN MARCH. IF IT IS NECESSARY TO EXTEND TEMPORARY COVER BEYOND JUNE 15, OVERSEED WITH 50 LB/ACRE KOBE (PIEDMONT AND COASTAL PLAIN) OR KOREAN (MOUNTAINS) LESPEDEZA IN LATE FEBRUARY OR EARLY MARCH.

THE ABOVE TABLE WAS TAKEN FROM THE NORTH CAROLINA EROSION AND SEDIMENT CONTROL PLANNING AND DESIGN MANUAL.

TRAFFIC CONTROL:
TRAFFIC CONTROL SHALL BE IN ACCORDANCE WITH NCDOT STANDARDS AND THE TRAFFIC CONTROL PLANS INCLUDED HEREIN.

SURVEY:
SURVEY WAS PROVIDED BY NCDOT. THE CONTRACTOR IS TO COORDINATE WITH THE SURVEYOR PRIOR TO GEOMETRIC LAYOUT.

SAWCUTS:
THE CONTRACTOR SHALL SAWCUT EXISTING ASPHALT AND/OR CONCRETE SURFACES PRIOR TO REMOVAL UNLESS DIRECTED BY THE ENGINEER. SAWCUT WIDTH SHALL BE 1 FOOT MINIMUM FROM THE EXISITING OR PROPOSED EDGE OF ASPHALT PAVEMENT.

QUALITY ASSURANCE:
SATISFYING QUALITY ASSURANCE PERMIT REQUIREMENTS IS NECESSARY PRIOR TO NCDOT ACCEPTING PROJECT IMPROVEMENTS WITHIN NCDOT R/W AND SUBSEQUENTLY RELEASING THE PERMIT AND PERFORMANCE BOND.
THE OWNER IS RESPONSIBLE FOR RETAINING THE APPROPRIATE PROFESSIONALS FOR ANY QUALITY ASSURANCE CERTIFICATIONS REQUIRED UNDER THE PERMIT. THESE MAY INCLUDE CERTIFICATION MEMORANDA, COMPLETION OF QMS (MV1 & MV2) FORMS, CERTAIN INSPECTION AND TESTING REPORTS, AS WELL AS SUPPORTING DOCUMENTATION AND CALCULATIONS.
VERIFICATIONS INCLUDE, BUT ARE NOT LIMITED TO, SUB-GRADE, PAVEMENT STRUCTURE, DRAINAGE, AND TRAFFIC CONTROL ITEMS.
CONTRACTOR SHALL ENSURE THE OWNER IS AWARE OF AND HAS PROPERLY ADDRESSED THESE PERMIT REQUIREMENTS.
CONTRACTOR SHALL PROVIDE ADVANCED NOTIFICATION TO THE RESPECTIVE PROFESSIONALS RESPONSIBLE FOR CONSTRUCTION QUALITY ASSURANCE.

STANDARDS

THE FOLLOWING ROADWAY STANDARDS AS APPEAR IN "ROADWAY STANDARD DRAWINGS" HIGHWAY DESIGN BRANCH - N. C. DEPARTMENT OF TRANSPORTATION - RALEIGH, N. C., DATED JANUARY 2012 ARE APPLICABLE TO THIS PROJECT AND BY REFERENCE HEREBY ARE CONSIDERED A PART OF THESE PLANS:

200.02	METHOD OF CLEARING - METHOD II
300.01	METHOD OF PIPE INSTALLATION
310.10	DRIVEWAY PIPE CONSTRUCTION
654.01	PAVEMENT REPAIRS
840.01	BRICK CATCH BASIN
840.02	CONCRETE CATCH BASIN
840.03	FRAMES, GRATES, AND HOOD
840.14	CONCRETE DROP INLET
840.15	BRICK DROP INLET
840.16	DROP INLET FRAME AND GRATES
840.19	CONCRETE GRATED DROP INLET TYPE 'D'
840.20	FRAMES AND WIDE SLOT FLAT GRATES
840.22	FRAMES AND WIDE SLOT SAG GRATES
840.24	FRAMES AND NARROW SLOT SAG GRATES
840.25	ANCHORAGE FOR FRAMES
840.28	BRICK GRATED DROP INLET TYPE 'D'
840.31	CONCRETE JUNCTION BO
840.32	BRICK JUNCTION BOX
840.34	TRAFFIC BEARING JUNCTION BOX
840.46	TRAFFIC BEARING PRECAST DRAINAGE STRUCTURE
840.54	MANHOLE FRAME AND COVER
846.01	CONCRETE CURB, GUTTER AND CURB & GUTTER
848.01	CONCRETE SIDEWALK
848.02	DRIVEWAY TURNOUT - RADIUS TYPE
848.03	DRIVEWAY TURNOUT - DROP CURB TYPE
848.04	STREET TURNOUT
848.05	CURB RAMP
852.01	CONCRETE ISLANDS
876.02	GUIDE FOR RIP RAP AT PIPE OUTLETS
904.50	MOUNTING OF TYPE `D', `E' AND `F' SIGNS ON `U' CHANNEL POSTS
1101.01	WORK ZONE ADVANCE WARNING SIGNS
1101.02	TEMPORARY LANE CLOSURES
1101.11	TRAFFIC CONTROL DESIGN TABLES
1110.01	STATIONARY WORK ZONE SIGNS - MOUNTING HEIGHT & LATERAL CLEARANCE
1110.02	PORTABLE WORK ZONE SIGNS - MOUNTING HEIGHT & LATERAL CLEARANCE
1115.01	FLASHING ARROW BOARDS
1130.01	DRUM
1205.01	PAVEMENT MARKINGS - LINE TYPES AND OFFSETS
1205.02	PAVEMENT MARKINGS - TWO-LANE AND MULTI-LANE ROADWAYS
1205.04	PAVEMENT MARKINGS - INTERSECTIONS
1205.05	PAVEMENT MARKINGS - TURN LANES
1205.08	PAVEMENT MARKINGS - SYMBOLS AND WORD MESSAGES
1250.01	RAISED PAVEMENT MARKERS - INSTALLATION SPACING
1251.01	RAISED PAVEMENT MARKIERS - PERMANENT AND TEMPORARY
1253.01	RAISED PAVEMENT MARKERS - SNOWPLOWABLE
1605.01	TEMPORARY SILT FENCE
1607.01	GRAVEL CONSTRUCTION ENTRANCE
1632.03	ROCK INLET SEDIMENT TRAP TYPE `C'
1633.02	TEMPORARY ROCK SILT CHECK TYPE `B'

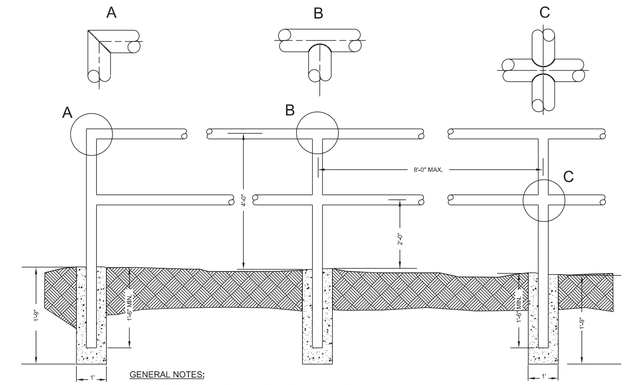

GENERAL NOTES:
1. ALL CONCRETE TO BE 3600 P.S.I. COMPRESSIVE STRENGTH.
2. TYPE OF PIPE TO BE USED IS 1-5/8" MAX. O.D. BLACK IRON, LOW CARBON PIPE OR GALVANIZED.
3. ALL JOINTS TO HAVE A 1/2" FILLET WELD AT ALL JOINTS.
4. AFTER INSTALLATION PAINT ASSMBLY WITH BLACK ALL WEATHER ENAMEL.
5. SEE DETAIL 50.04-B FOR WARRANTS

SAFETY RAIL

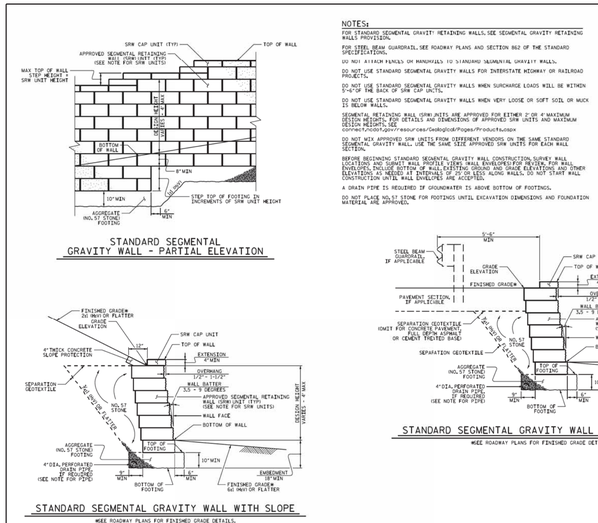

SEGMENTAL GRAVITY WALL

NORTH CAROLINA PROFESSIONAL SEAL ENGINEER JOHN G. TOMASINO

FINAL

DAVENPORT
HOME OFFICE
305 WEST FOURTH STREET, SUITE 2A
WINSTON-SALEM, NC 27101
336.744.1836 www.davenportworld.com
NCBELS FIRM LICENSE NO. C-2322

PROJECT: 14-236
DATE: 07/2616
DESIGNED BY: JGT
DRAWN BY: JGT
CHECKED BY: DRC
SCALE: AS NOTED

REVISIONS

NO.	DATE	DESCRIPTION

CLIENT:
HALPERN DEVELOPMENT COMPANY, LLC
4799 NORTHSIDE DRIVE
ATLANTA, GA 30327
P: (404) 290-1975

PROJECT:
OGDEN MARKET PLACE
WILMINGTON, NC

TITLE:
GENERAL NOTES

SHEET NO.
GN-02

THIS DOCUMENT, TOGETHER WITH THE CONCEPTS AND DESIGNS PRESENTED THEREIN, IS INTENDED ONLY FOR THE SPECIFIC PURPOSE AND CLIENT FOR WHICH IT WAS PREPARED. REUSE OF OR IMPROPER RELIANCE UPON THIS DOCUMENT BY OTHERS, WITHOUT WRITTEN AUTHORIZATION AND ADAPTATION BY DAVENPORT, SHALL BE WITHOUT LIABILITY TO DAVENPORT AND SHALL BE A VIOLATION OF THE AGREEMENT BETWEEN DAVENPORT AND ITS CLIENT.

PAVEMENT SCHEDULE	
C1	PROP. APPROX. 3" ASPHALT CONCRETE SURFACE COURSE, TYPE S9.5B, AT AN AVERAGE RATE OF 168 LBS. PER SQ. YD. TO BE PLACED IN TWO LIFTS 1.5" DEPTH EACH.
C2	PROP. APPROX. 1.5" ASPHALT CONCRETE SURFACE COURSE, TYPE S9.5B, AT AN AVERAGE RATE OF 168 LBS. PER SQ. YD.
C3	PROP. VARIABLE DEPTH ASPHALT CONCRETE SURFACE COURSE, TYPE S9.5B, AT AN AVERAGE RATE OF 112 LBS. PER SQ. YD. PER 1" DEPTH TO BE LACED IN LAYERS NOT TO EXCEED 2" IN DEPTH.
D1	PROP. APPROX. 4" ASPHALT CONCRETE INTERMEDIATE COURSE, TYPE I19.0B, AT AN AVERAGE RATE OF 456 LBS. PER SQ. YD.
D2	PROP. VARIABLE DEPTH ASPHALT CONCRETE INTERMEDIATE COURSE, TYPE I19.0B, AT AN AVERAGE RATE OF 114 LBS. PER SQ. YD. PER 1" DEPTH TO BE PLACED IN LAYERS NOT LESS THAN 2½" IN DEPTH OR GREATER THAN 4" IN DEPTH.
E1	PROP. APPROX. 5" ASPHALT CONCRETE BASE COURSE, TYPE B25.0B, AT AN AVERAGE RATE OF 570 LBS. PER SQ. YD.
E2	PROP. VARIABLE DEPTH ASPHALT CONCRETE BASE COURSE, TYPE B25.0B, AT AN AVERAGE RATE OF 114 LBS. PER SQ. YD. PER 1" DEPTH TO BE PLACED IN LAYERS NOT LESS THAN 3" IN DEPTH OR GREATER THAN 5½" IN DEPTH.
R1	2'-6" CURB AND GUTTER
R2	5" MONOLITHIC CONCRETE ISLAND
S	4" CONCRETE SIDEWALK
T	EARTH MATERIAL.
U	EXISTING PAVEMENT.
W	VAIRABLE DEPTH ASPHALT PAVEMENT (SEE WEDGING DETAIL)

NOTE: PAVEMENT EDGE SLOPES ARE 1:1 UNLESS SHOWN OTHERWISE.

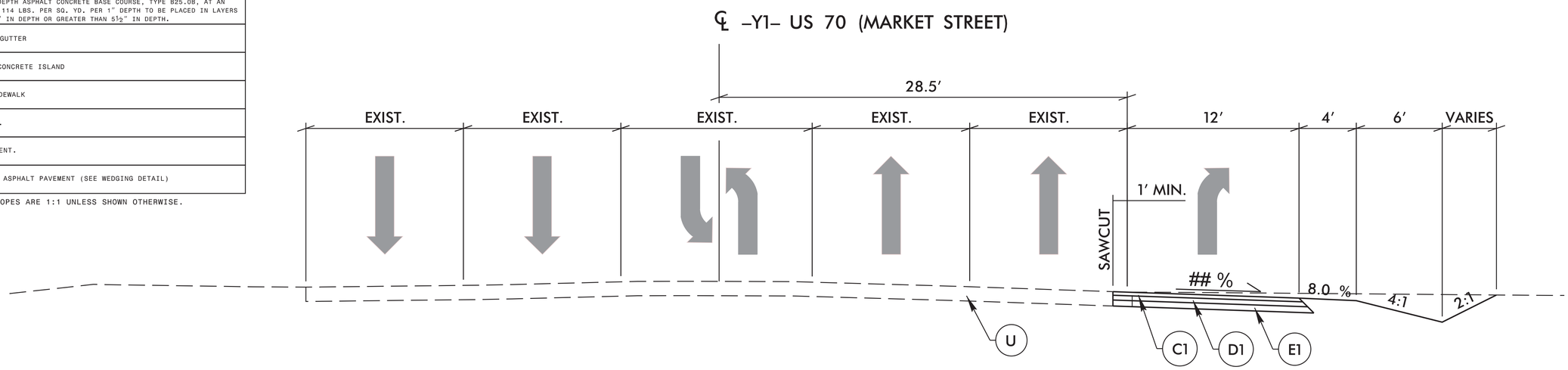

TYPICAL SECTION NO. 1

STA. 68+33.99 TO STA. 78+33.97

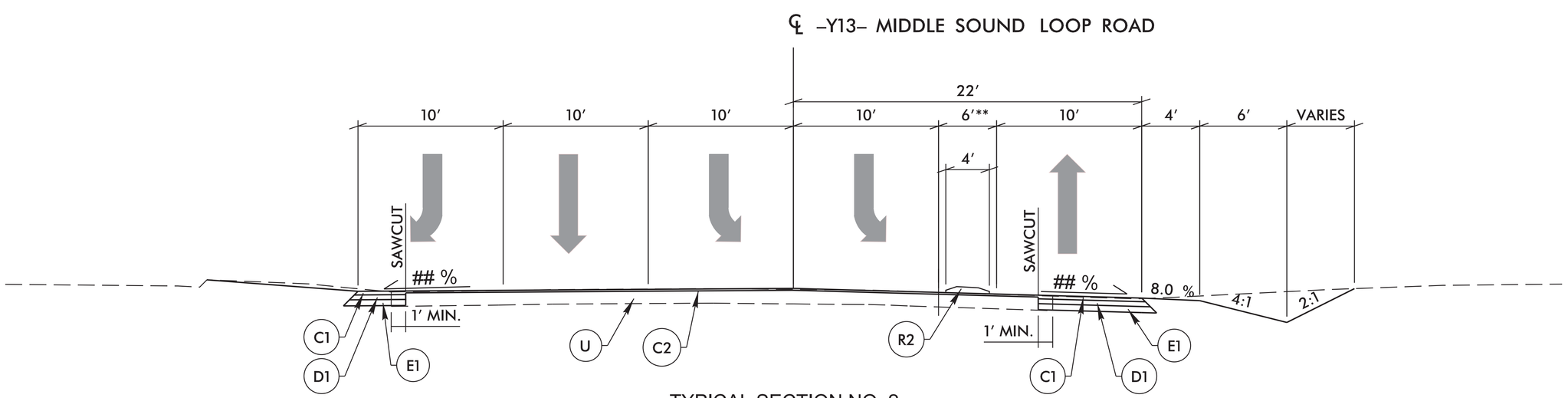

TYPICAL SECTION NO. 2

STA. 24+07.07 TO STA. 25+39.24

** CONCRETE ISLAND BEGINS AT STA. 24+25.08

NORTH CAROLINA PROFESSIONAL ENGINEER SEAL 33633 JOHN G. TOWNSEND

FINAL

DAVENPORT
HOME OFFICE
305 WEST FOURTH STREET, SUITE 2A
WINSTON-SALEM, NC 27101
336.744.1636 www.davenportworld.com
NCBELS FIRM LICENSE NO. C-2522

PROJECT: 14-236
DATE: 07/2616
DESIGNED BY: JGT
DRAWN BY: JGT
CHECKED BY: DRC
SCALE: AS NOTED

REVISIONS

NO.	DATE	DESCRIPTION

CLIENT: HALPERN DEVELOPMENT COMPANY, LLC
4799 NORTHSIDE DRIVE
ATLANTA, GA 30327
P: (404) 290-1975

PROJECT: OGDEN MARKET PLACE
WILMINGTON, NC

TITLE: TYPICAL SECTIONS

SHEET NO.
TS-01

THIS DOCUMENT, TOGETHER WITH THE CONCEPTS AND DESIGNS PRESENTED THEREIN, IS INTENDED ONLY FOR THE SPECIFIC PURPOSE AND CLIENT FOR WHICH IT WAS PREPARED. REUSE OF OR IMPROPER RELIANCE UPON THIS DOCUMENT BY OTHERS, WITHOUT WRITTEN AUTHORIZATION AND ADAPTATION BY DAVENPORT, SHALL BE WITHOUT LIABILITY TO DAVENPORT AND SHALL BE A VIOLATION OF THE AGREEMENT BETWEEN DAVENPORT AND ITS CLIENT.

PAVEMENT SCHEDULE	
C1	PROP. APPROX. 3" ASPHALT CONCRETE SURFACE COURSE, TYPE S9.5B, AT AN AVERAGE RATE OF 168 LBS. PER SQ. YD. TO BE PLACED IN TWO LIFTS 1.5" DEPTH EACH.
C2	PROP. APPROX. 1.5" ASPHALT CONCRETE SURFACE COURSE, TYPE S9.5B, AT AN AVERAGE RATE OF 168 LBS. PER SQ. YD.
C3	PROP. VARIABLE DEPTH ASPHALT CONCRETE SURFACE COURSE, TYPE S9.5B, AT AN AVERAGE RATE OF 112 LBS. PER SQ. YD. PER 1" DEPTH TO BE LACED IN LAYERS NOT TO EXCEED 2" IN DEPTH.
D1	PROP. APPROX. 4" ASPHALT CONCRETE INTERMEDIATE COURSE, TYPE I19.0B, AT AN AVERAGE RATE OF 456 LBS. PER SQ. YD.
D2	PROP. VARIABLE DEPTH ASPHALT CONCRETE INTERMEDIATE COURSE, TYPE I19.0B, AT AN AVERAGE RATE OF 114 LBS. PER SQ. YD. PER 1" DEPTH TO BE PLACED IN LAYERS NOT LESS THAN 2½" IN DEPTH OR GREATER THAN 4" IN DEPTH.
E1	PROP. APPROX. 5" ASPHALT CONCRETE BASE COURSE, TYPE B25.0B, AT AN AVERAGE RATE OF 570 LBS. PER SQ. YD.
E2	PROP. VARIABLE DEPTH ASPHALT CONCRETE BASE COURSE, TYPE B25.0B, AT AN AVERAGE RATE OF 114 LBS. PER SQ. YD. PER 1" DEPTH TO BE PLACED IN LAYERS NOT LESS THAN 3" IN DEPTH OR GREATER THAN 5½" IN DEPTH.
R1	2'-6" CURB AND GUTTER
R2	5" MONOLITHIC CONCRETE ISLAND
S	4" CONCRETE SIDEWALK
T	EARTH MATERIAL.
U	EXISTING PAVEMENT.
W	VAIRABLE DEPTH ASPHALT PAVEMENT (SEE WEDGING DETAIL)

NOTE: PAVEMENT EDGE SLOPES ARE 1:1 UNLESS SHOWN OTHERWISE.

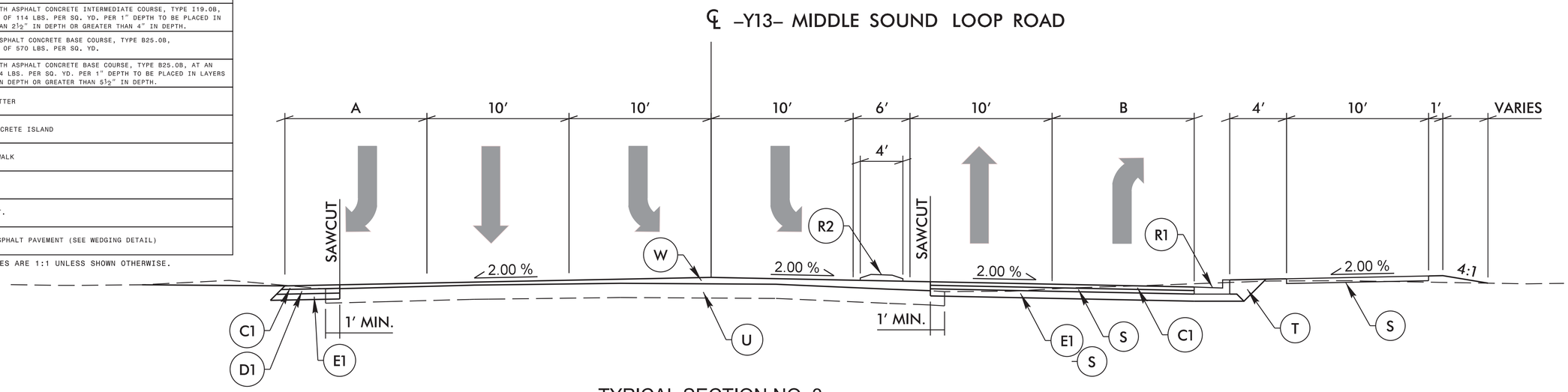

TYPICAL SECTION NO. 3

STA. 25+39.24 TO STA. 25+54.39 (A = 10'; B= 0')
STA. 25+54.39 TO STA. 25+79.70 (A = 10' TO 6.46'; B= 0')
STA. 25+79.70 TO STA. 26+79.70 (A = 6.46' TO 0'; B= 0' TO 10')
STA. 26+79.70 TO STA. 27+56.74 (A = 0'; B = 10')

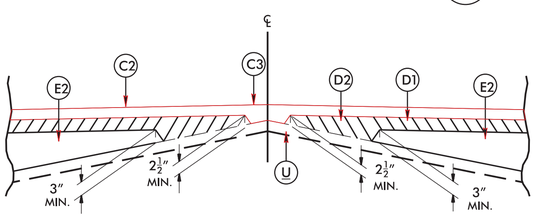

Detail Showing Method of Wedging

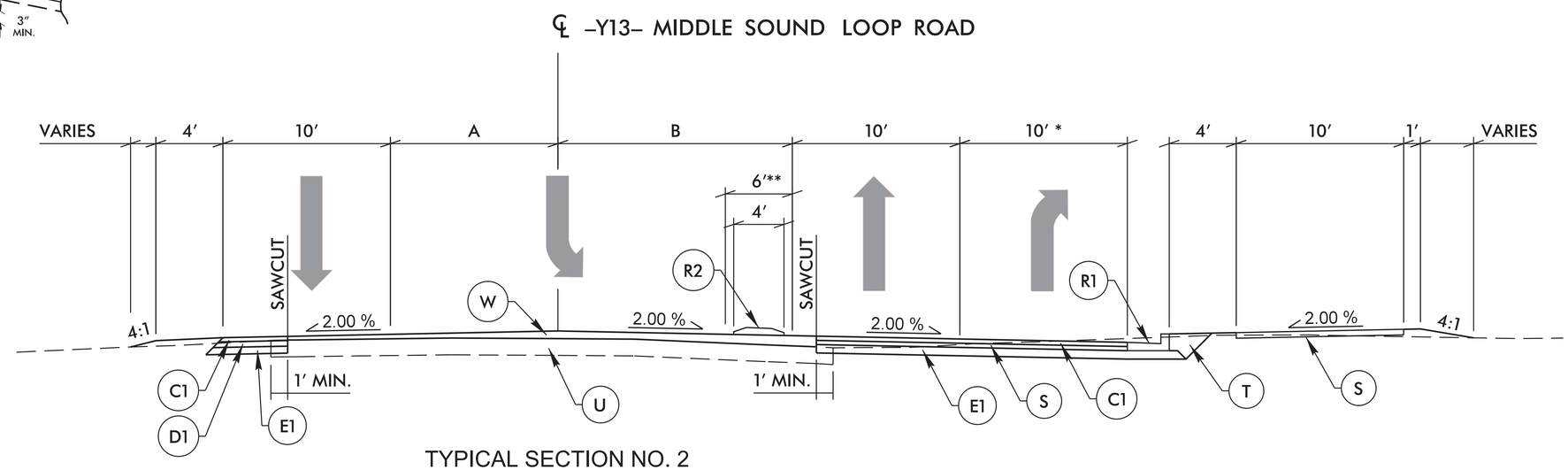

TYPICAL SECTION NO. 2

STA. 27+56.74 TO STA. 28+18.17 (A = 10'; B = 16' TO 14')
STA. 28+18.17 TO STA. 32+48.17 (A = 10' TO 0'; B = 14' TO 0')
* RIGHT TURN LANE ENDS AT STA. 28+61.29
** MEDIAN NARROWS FROM 6' TO 4' FROM STA. 27+72.09 TO STA. 28+18.11
** CONCRETE ISLAND NARROWS FROM 4' TO 3.4' FROM STA. 27+72.09 TO STA. 27+92.98 AND ENDS AT STA. 27+92.98

NORTH CAROLINA PROFESSIONAL SEAL 033 ENGINEER JOHN G. TOMASINO

FINAL

DAVENPORT
HOME OFFICE
305 WEST FOURTH STREET, SUITE 2A
WINSTON-SALEM, NC 27101
336.744.1836 www.davenportworld.com
NCBELS FIRM LICENSE NO. C-2522

PROJECT: 14-236
DATE: 07/26/16
DESIGNED BY: JGT
DRAWN BY: JGT
CHECKED BY: DRC
SCALE: AS NOTED

REVISIONS		
NO.	DATE	DESCRIPTION

CLIENT: HALPERN DEVELOPMENT COMPANY, LLC
4799 NORTHSIDE DRIVE
ATLANTA, GA 30327
P: (404) 290-1975

PROJECT: OGDEN MARKET PLACE
WILMINGTON, NC

TITLE: TYPICAL SECTIONS

SHEET NO.
TS-02

THIS DOCUMENT, TOGETHER WITH THE CONCEPTS AND DESIGNS PRESENTED THEREIN, IS INTENDED ONLY FOR THE SPECIFIC PURPOSE AND CLIENT FOR WHICH IT WAS PREPARED. REUSE OF OR IMPROPER RELIANCE UPON THIS DOCUMENT BY OTHERS, WITHOUT WRITTEN AUTHORIZATION AND ADAPTATION BY DAVENPORT, SHALL BE WITHOUT LIABILITY TO DAVENPORT AND SHALL BE A VIOLATION OF THE AGREEMENT BETWEEN DAVENPORT AND ITS CLIENT.

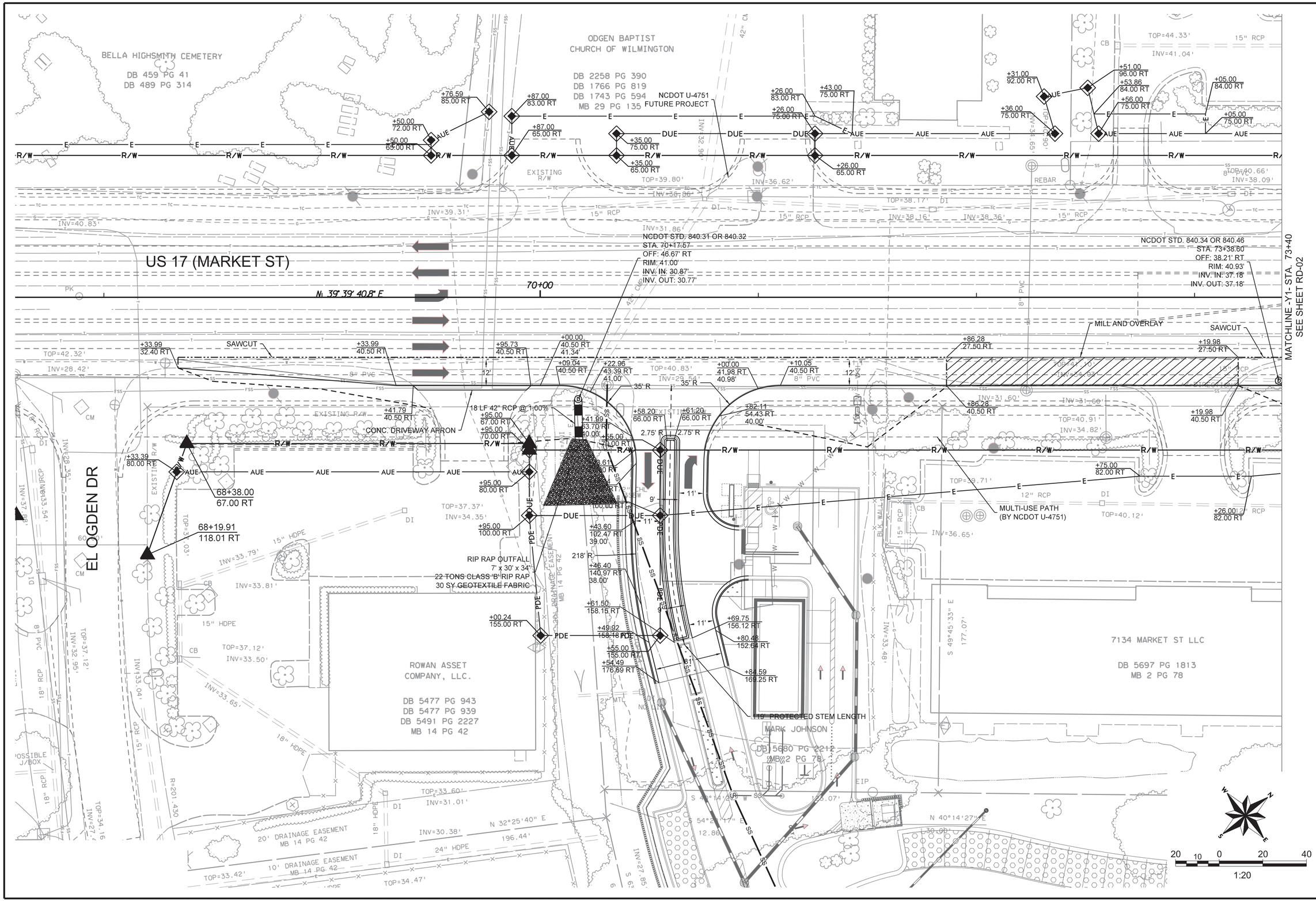

NORTH CAROLINA PROFESSIONAL SEAL 33533 ENGINEER JOHN G. TOWNSEND

FINAL

DAVENPORT
HOME OFFICE
305 WEST FOURTH STREET, SUITE 2A
WINSTON-SALEM, NC 27101
336.744.1636 www.davenportworld.com
NCBELS FIRM LICENSE NO. C-2522

PROJECT:	14-236
DATE:	07/2616
DESIGNED BY:	JGT
DRAWN BY:	JGT
CHECKED BY:	DRC
SCALE:	AS NOTED

REVISIONS

NO.	DATE	DESCRIPTION

CLIENT:
HALPERN DEVELOPMENT COMPANY, LLC
4799 NORTHSIDE DRIVE
ATLANTA, GA 30327
P: (404) 290-1975

PROJECT:
OGDEN MARKET PLACE
WILMINGTON, NC

TITLE:
ROADWAY PLAN SHEET

SHEET NO.
RD-01

THIS DOCUMENT, TOGETHER WITH THE CONCEPTS AND DESIGNS PRESENTED THEREIN, IS INTENDED ONLY FOR THE SPECIFIC PURPOSE AND CLIENT FOR WHICH IT WAS PREPARED. REUSE OF OR IMPROPER RELIANCE UPON THIS DOCUMENT BY OTHERS, WITHOUT WRITTEN AUTHORIZATION AND ADAPTATION BY DAVENPORT, SHALL BE WITHOUT LIABILITY TO DAVENPORT AND SHALL BE A VIOLATION OF THE AGREEMENT BETWEEN DAVENPORT AND ITS CLIENT.

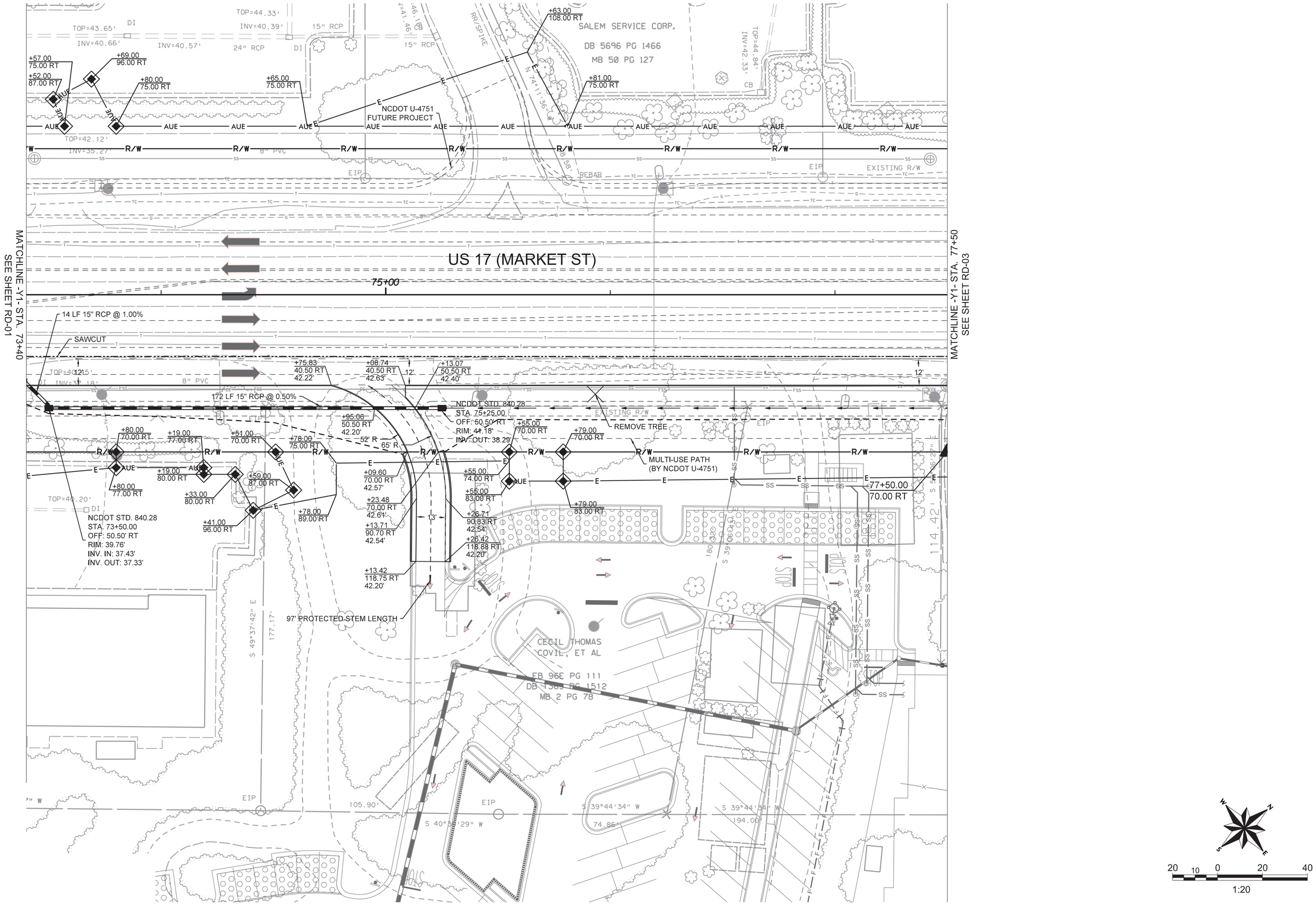

NORTH CAROLINA PROFESSIONAL SEAL 33533 ENGINEER JOHN G. TOWNSEND

FINAL

DAVENPORT
HOME OFFICE
305 WEST FOURTH STREET, SUITE 2A
WINSTON-SALEM, NC 27101
336.744.1636 www.davenportworld.com
NCBELS FIRM LICENSE NO. C-2522

PROJECT:	14-236
DATE:	07/2616
DESIGNED BY:	JGT
DRAWN BY:	JGT
CHECKED BY:	DRC
SCALE:	AS NOTED

REVISIONS

NO.	DATE	DESCRIPTION

CLIENT:
HALPERN DEVELOPMENT COMPANY, LLC
4799 NORTHSIDE DRIVE
ATLANTA, GA 30327
P: (404) 290-1975

PROJECT:
OGDEN MARKET PLACE
WILMINGTON, NC

TITLE:
ROADWAY PLAN SHEET

SHEET NO.
RD-02

THIS DOCUMENT, TOGETHER WITH THE CONCEPTS AND DESIGNS PRESENTED THEREIN, IS INTENDED ONLY FOR THE SPECIFIC PURPOSE AND CLIENT FOR WHICH IT WAS PREPARED. REUSE OF OR IMPROPER RELIANCE UPON THIS DOCUMENT BY OTHERS, WITHOUT WRITTEN AUTHORIZATION AND ADAPTATION BY DAVENPORT, SHALL BE WITHOUT LIABILITY TO DAVENPORT AND SHALL BE A VIOLATION OF THE AGREEMENT BETWEEN DAVENPORT AND ITS CLIENT.

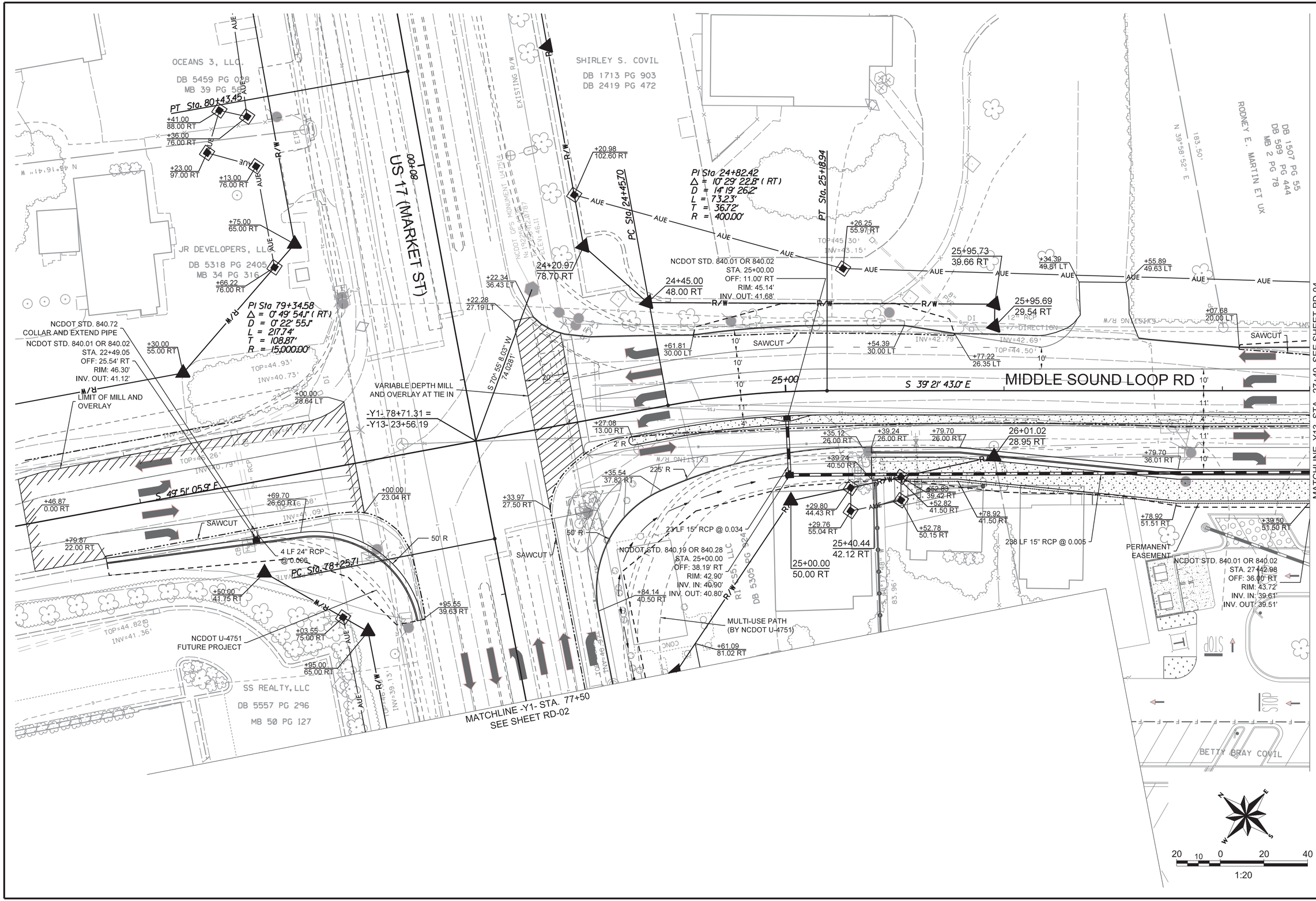

NORTH CAROLINA PROFESSIONAL ENGINEER SEAL 33533 JOHN G. TOWNSEND

FINAL

DAVENPORT
HOME OFFICE
305 WEST FOURTH STREET, SUITE 2A
WINSTON-SALEM, NC 27101
336.744.1636 www.davenportworld.com
NCBELS FIRM LICENSE NO. C-2522

PROJECT:	14-236
DATE:	07/2616
DESIGNED BY:	JGT
DRAWN BY:	JGT
CHECKED BY:	DRC
SCALE:	AS NOTED

REVISIONS

NO.	DATE	DESCRIPTION

CLIENT:
HALPERN DEVELOPMENT COMPANY, LLC
4799 NORTHSIDE DRIVE
ATLANTA, GA 30327
P: (404) 290-1975

PROJECT:
OGDEN MARKET PLACE
WILMINGTON, NC

TITLE:
ROADWAY PLAN SHEET

SHEET NO.
RD-03

THIS DOCUMENT, TOGETHER WITH THE CONCEPTS AND DESIGNS PRESENTED THEREIN, IS INTENDED ONLY FOR THE SPECIFIC PURPOSE AND CLIENT FOR WHICH IT WAS PREPARED. REUSE OF OR IMPROPER RELIANCE UPON THIS DOCUMENT BY OTHERS, WITHOUT WRITTEN AUTHORIZATION AND ADAPTATION BY DAVENPORT, SHALL BE WITHOUT LIABILITY TO DAVENPORT AND SHALL BE A VIOLATION OF THE AGREEMENT BETWEEN DAVENPORT AND ITS CLIENT.

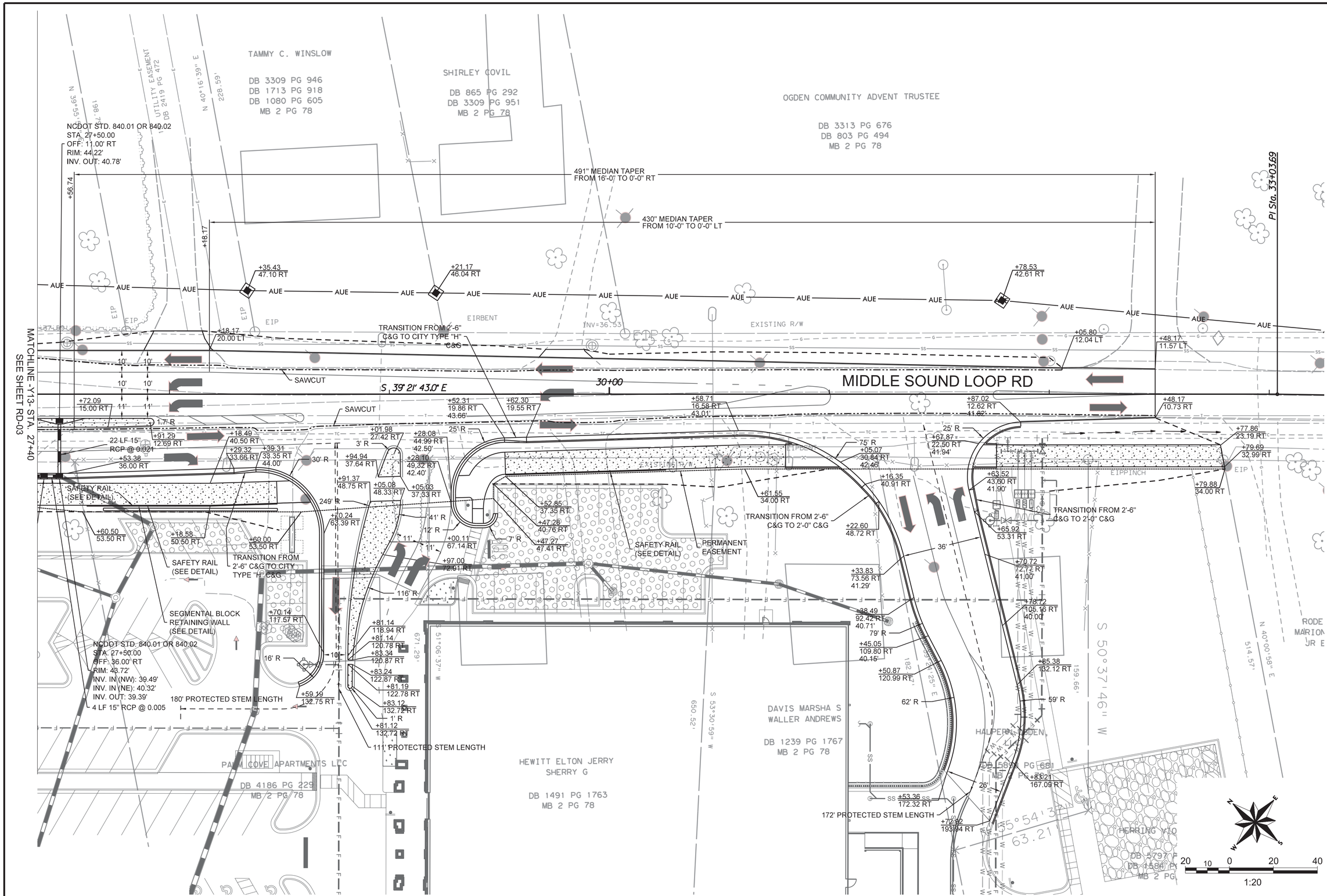

NORTH CAROLINA PROFESSIONAL ENGINEER SEAL 33533 JOHN G. TOWNSEND

FINAL

DAVENPORT
HOME OFFICE
305 WEST FOURTH STREET, SUITE 2A
WINSTON-SALEM, NC 27101
336.744.1636 www.davenportworld.com
NCBELS FIRM LICENSE NO. C-2522

PROJECT:	14-236
DATE:	07/2616
DESIGNED BY:	JGT
DRAWN BY:	JGT
CHECKED BY:	DRC
SCALE:	AS NOTED

REVISIONS

NO.	DATE	DESCRIPTION

CLIENT: HALPERN DEVELOPMENT COMPANY, LLC
4799 NORTHSIDE DRIVE
ATLANTA, GA 30327
P: (404) 290-1975

PROJECT: OGDEN MARKET PLACE
WILMINGTON, NC

TITLE: ROADWAY PLAN SHEET

SHEET NO.
RD-04

THIS DOCUMENT, TOGETHER WITH THE CONCEPTS AND DESIGNS PRESENTED THEREIN, IS INTENDED ONLY FOR THE SPECIFIC PURPOSE AND CLIENT FOR WHICH IT WAS PREPARED. REUSE OF OR IMPROPER RELIANCE UPON THIS DOCUMENT BY OTHERS, WITHOUT WRITTEN AUTHORIZATION AND ADAPTATION BY DAVENPORT, SHALL BE WITHOUT LIABILITY TO DAVENPORT AND SHALL BE A VIOLATION OF THE AGREEMENT BETWEEN DAVENPORT AND ITS CLIENT.

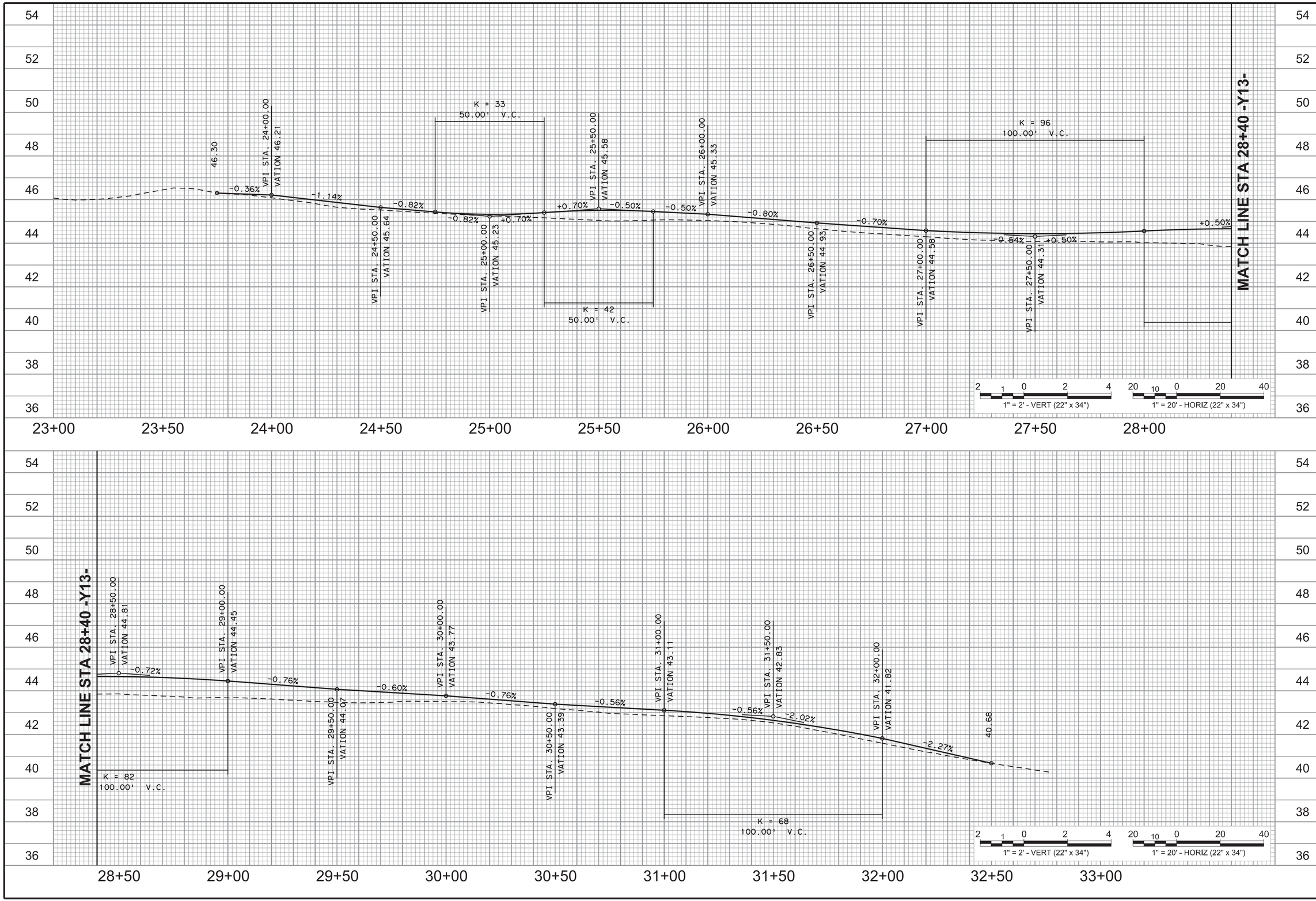

NORTH CAROLINA PROFESSIONAL ENGINEER SEAL 33333 JOHN G. TOWNSEND

FINAL

DAVENPORT
HOME OFFICE
305 WEST FOURTH STREET, SUITE 2A
WINSTON-SALEM, NC 27101
336.744.1636 www.davenportworld.com
NCBELS FIRM LICENSE NO. C-2522

PROJECT: 14-236
DATE: 07/2616
DESIGNED BY: JGT
DRAWN BY: JGT
CHECKED BY: DRC
SCALE: AS NOTED

REVISIONS

NO.	DATE	DESCRIPTION

CLIENT:
HALPERN DEVELOPMENT COMPANY, LLC
4799 NORTHSIDE DRIVE
ATLANTA, GA 30327
P: (404) 290-1975

PROJECT:
OGDEN MARKET PLACE
WILMINGTON, NC

TITLE:
ROADWAY PROFILE SHEET

SHEET NO.
PR-01

THIS DOCUMENT, TOGETHER WITH THE CONCEPTS AND DESIGNS PRESENTED THEREIN, IS INTENDED ONLY FOR THE SPECIFIC PURPOSE AND CLIENT FOR WHICH IT WAS PREPARED. REUSE OF OR IMPROPER RELIANCE UPON THIS DOCUMENT BY OTHERS, WITHOUT WRITTEN AUTHORIZATION AND ADAPTATION BY DAVENPORT, SHALL BE WITHOUT LIABILITY TO DAVENPORT AND SHALL BE A VIOLATION OF THE AGREEMENT BETWEEN DAVENPORT AND ITS CLIENT.

CHANGES MAY BE REQUIRED WHEN PHYSICAL DIMENSIONS IN THE DETAIL DRAWINGS, STANDARD DETAILS AND ROADWAY DETAILS ARE NOT ATTAINABLE TO MEET FIELD CONDITIONS, OR RESULT IN DUPLICATE, OR UNDESIRED OVERLAPPING OF DEVICES. MODIFICATION MAY INCLUDE: MOVING, SUPPLEMENTING, COVERING OR REMOVAL OF DEVICES, AS DIRECTED BY THE ENGINEER OR NCDOT.

THE FOLLOWING GENERAL NOTES APPLY AT ALL TIMES FOR THE DURATION OF THE CONSTRUCTION PROJECT, EXCEPT WHEN OTHERWISE NOTED IN THE PLAN, OR DIRECTED BY THE ENGINEER OR NCDOT.

PROJECT NOTES

A. DO NOT CONDUCT ANY HAULING OPERATIONS AGAINST THE FLOW OF TRAFFIC OF AN OPEN TRAVELWAY UNLESS THE HAULING OPERATION IS PROTECTED BY BARRIER OR GUARDRAIL OR AS DIRECTED BY THE ENGINEER.

B. NO LANE CLOSURES ARE PERMITTED ON US 17 DURING THE AM (7-9) OR PM (5-7) PEAK PERIODS.

C.

LANE AND SHOULDER CLOSURE REQUIREMENTS

D. REMOVE LANE CLOSURE DEVICES FROM THE LANE WHEN WORK IS NOT BEING PERFORMED BEHIND THE LANE CLOSURE OR WHEN A LANE CLOSURE IS NO LONGER NEEDED, OR AS DIRECTED BY THE ENGINEER.

E. WHEN PERSONNEL AND/OR EQUIPMENT ARE WORKING WITHIN 15 FT OF AN OPEN TRAVEL LANE, CLOSE THE NEAREST OPEN SHOULDER USING ROADWAY STANDARD DRAWING NO. 1101.04 UNLESS THE WORK AREA IS PROTECTED BY BARRIER OR GUARDRAIL OR A LANE CLOSURE IS INSTALLED.

F. WHEN PERSONNEL AND/OR EQUIPMENT ARE WORKING ON THE SHOULDER ADJACENT TO AN UNDIVIDED FACILITY AND WITHIN 5 FT OF AN OPEN TRAVEL LANE, CLOSE THE NEAREST OPEN TRAVEL LANE USING ROADWAY STANDARD DRAWING NO. 1101.02 UNLESS THE WORK AREA IS PROTECTED BY BARRIER OR GUARDRAIL.

WHEN PERSONNEL AND/OR EQUIPMENT ARE WORKING ON THE SHOULDER ADJACENT TO A DIVIDED FACILITY AND WITHIN 10 FT OF AN OPEN TRAVEL LANE, CLOSE THE NEAREST OPEN TRAVEL LANE USING ROADWAY STANDARD DRAWING NO. 1101.02 UNLESS THE WORK AREA IS PROTECTED BY BARRIER OR GUARDRAIL.

G. WHEN PERSONNEL AND/OR EQUIPMENT ARE WORKING WITHIN A LANE OF TRAVEL OF AN UNDIVIDED OR DIVIDED FACILITY, CLOSE THE LANE ACCORDING TO THE TRAFFIC CONTROL PLANS, ROADWAY STANDARD DRAWINGS OR AS DIRECTED BY THE ENGINEER. CONDUCT THE WORK SO THAT ALL PERSONNEL AND/OR EQUIPMENT REMAIL WITH THE CLOSED TRAVEL LANE.

H. DO NOT WORK SIMULTANEOUSLY WITHIN 15 FT ON BOTH SIDES OF AN OPEN TRAVELWAY, RAMP OR LOOP WITHIN THE SAME LOCATION UNLESS PROTECTED WITH GUARDRAIL OR BARRIER.

PAVEMENT EDGE DROP OFF REQUIREMENTS

I. BACKFILL AT A 6:1 SLOPE UP TO THE EDGE AND ELEVATION OF EXISTING PAVEMENT IN AREAS ADJACENT TO AN OPENED TRAVEL LANE THAT HAS AN EDGE OF PAVEMENT DROP-OFF AS FOLLOWS:

BACKFILL DROP-OFFS THE EXCEED 2 INCHES ON ROADWAYS WITH POSTED SPEED LIMITS OF 45 MPH OR GREATER.

BACKFILL DROP-OFFS THAT EXCEED 3 INCHES ON ROADWAYS WITH POSTED SPEED LIMITS LESS THAN 45 MPH.

BACKFILL WITH SUITABLE COMPACTED MATERIAL, AS APPROVED BY THE ENGINEER.

J. DO NOT EXCEED A DIFFERENCE OF 2 INCHES IN ELEVATION BETWEEN OPEN LANES OF TRAFFIC FOR NOMINAL LIFTS OF 1.5 INCHES. INSTALL ADVANCE WARNING „ UNEVEN LANES‟ SIGNS (W8-11) 350 FEET IN ADVANCE AND A MINIMUM OF EVERY HALF MILE THROUGHOUT THE UNEVEN AREA.

SIGNING

K. INSTALL ADVANCE WORK ZONE WARNING SIGNS WHEN WORK IS WITHIN 40 FT FROM THE EDGE OF TRAVEL LANE AND NO MORE THAN THREE (3) DAYS PRIOR TO THE BEGINNING OF CONSTRUCTION.

L. ENSURE ALL NECESSARY SIGNING IS IN PLACE PRIOR TO ALTERING ANY TRAFFIC PATTERN.

M. INSTALL BLACK ON ORANGE „ DIP‟ SIGNS (W8-2) AND/OR „ BUMP‟ SIGNS (W8-1) 100 ft IN ADVANCE OF THE UNEVEN AREA, OR AS DIRECTED BY THE ENGINEER.

TRAFFIC BARRIER

N. INSTALL TEMPORARY BARRIER ACCORDING TO THE TRAFFIC CONTROL PLANS A MAXIMUM OF TWO (2) WEEKS PRIOR TO BEGINNING WORK IN ANY LOCATION. ONCE TEMPORARY BARRIER IS INSTALLED AT ANY LOCATION, PROCEED IN A CONTINUOUS MANNER TO COMPLETE THE PROPOSED WORK IN THAT LOCATION UNLESS OTHERWISE STATED IN THE TRAFFIC CONTROL PLANS OR AS DIRECTED BY THE ENGINEER.

DO NOT PLACE BARRIER DIRECTLY ON ANY SURFACE OTHER THAN ASPHALT OR CONCRETE.

ONCE TEMPORARY BARRIER IS INSTALLED AT ANY LOCATION AND NO WORK IS PERFORMED BEHIND THE TEMPORARY BARRIER FOR A PERIOD LONGER THAN TWO (2) MONTHS, REMOVE/RESET TEMPORARY BARRIER UNLESS OTHERWISE STATED IN THE TRAFFIC CONTROL PLANS, TEMPORARY BARRIER IS PROTECTING A HAZARD, OR AS DIRECTED BY THE ENGINEER.

INSTALL AND SPACE DRUMS NO GREATER THAN TWICE THE POSTED SPEEED LIMIT (MPH) TO CLOSE OR KEEP THE SECTION OF THE ROADWAY CLOSED UNTIL THE TEMPORARY BARRIER CAN BE PLACED OR AFTER THE TEMPORARY BARRIER IS REMOVED.

O. PROTECT THE APPROACH END OF MOVABLE/PORTABLE CONCRETE BARRIER AT ALL TIMES DURING THE INSTALLATION AND REMOVAL OF THE BARRIER BY EITHER A TRUCK MOUNTED IMPACT ATTENUATOR (MAXIMUM 72 HOURS) OR A TEMPORARY CRASH CUSHION.

PROTECT THE APPROACH END OF MOVABLE/PORTABLE CONCRETE BARRIER FROM ONCOMING TRAFFIC AT ALL TIMES BY A TEMPORARY CRASH CUSHION UNLESS THE APPROACH END OF MOVABLE/PORTABLE CONCRETE BARRIER IS OFFSET FROM ONCOMING TRAFFIC AS FOLLOWS OR AS SHOWN IN THE PLANS:

POSTED SPEED LIMIT	MINIMUM OFFSET
40 OR LESS	15 FT
45-50	20 FT
55	25 FT
60 MPH or HIGHER	30 FT

TRAFFIC PATTERN ALTERATIONS

P. NOTIFY THE ENGINEER TWENTY ONE (21) CALENDAR DAYS PRIOR TO ANY TRAFFIC PATTERN ALTERATION.

TRAFFIC CONTROL DEVICES

Q. SPACE CHANNELIZING DEVICES IN WORK AREAS NO GREATER THAN TWICE THE POSTED SPEED LIMIT (MPH), EXCEPT 10 FT ON-CENTER IN RADII, AND 3 FT OFF THE EDGE OF AN OPEN TRAVELWAY, WHEN LANE CLOSURES ARE NOT IN EFFECT. WHEN SKINNY DRUMS ARE ALLOWED, REFER TO SECTION 1180 OF STANDARD SPECIFICATIONS FOR ROADS AND STRUCTURES OR AS SHOWN IN THE PLANS.

R. PLACE TYPE III BARRICADES, WITH „ ROAD CLOSED‟ SIGN R11-2 ATTACHED, OF SUFFICIENT LENGTH TO CLOSE ENTIRE ROADWAY.

S. PLACE ADDITIONAL SETS OF THREE CHANNELIZING DEVICES (DRUMS, CONES OR SKINNY DRUMS) PERPENDICULAR TO THE EDGE OF TRAVELWAY ON 500 FT CENTERS WHEN UNOPENED LANES ARE CLOSED TO TRAFFIC.

T. ONLY UNIFORMED POLICE OFFICERS SHALL DIRECT TRAFFIC THROUGH SIGNALIZED INTERSECTIONS. THE TRAFFIC SIGNAL MAY BE PUT INTO FLASHING OPERATION OR MAY REMAIL IN NORMAL OPERATION AT THE DISCRETION OF THE OFFICER.

OFFICERS SHALL BE PROPERLY ATTIRED AND SHALL DIRECT TRAFFIC WITH HAND MOTIONS. FLASHLIGHTS WITH RED CONES SHOULD BE USED AT NIGHT. OFFICERS MAY ALSO USE A WHISTLE TO SIGNAL WHEN THEY ARE CHANGING THE DIRECTION OT THE RIGHT OF WAY.

PAVEMENT MARKING AND MARKERS

U. INSTALL PAVEMENT MARKINGS AND PAVEMENT MARKERS ON THE FINAL SURFACE AS FOLLOWS:

ROAD NAME	MARKING	MARKER
ALL	THERMO	PERMANENT

V. INSTALL TEMPORARY PAVEMENT MARKINGS AND TEMPORARY PAVEMENT MARKERS ON INTERIM LAYERS OF PAVEMENT AS FOLLOWS:

ROAD NAME	MARKING	MARKER
ALL	PAINT	NONE

W. PLACE ONE APPLICATION OF PAINT FOR TEMPORARY TRAFFIC PATTERNS. PLACE A SECOND APPLICATION OF PAINT SIX (6) MONTHS AFTER THE INITIAL APPLICATION AND EVERY SIX MONTHS AS DIRECTED BY THE ENGINEER.

X. TIE PROPOSED PAVEMENT MARKING LINES TO EXISTING PAVEMENT MARKING LINES.

Y. REMOVE/REPLACE ANY CONFLICTING/DAMAGED PAVEMENT MARKINGS AND MARKERS BY THE END OF EACH DAY'S OPERATION.

MISCELLANEOUS

Z. IN THE EVENT A TIE-IN CANNOT BE MADE IN ONE DAYS TIME, BRING THE TIE-IN AREA TO AN APPROPRIATE ROADWAY ELEVATION, AS DETERMINED BY THE ENGINEER. PLACE BLACK ON ORANGE "LOOSE GRAVEL" SIGNS (W8-7) AND BLACK ON ORANGE "PAVEMENT ENDS" SIGNS (W8-3) AND RESPECTIVELY IN ADVANCE OF THE UNEVEN AREAS. USE DRUMS TO DELINEATE THE EDGE OF ROADWAY ALONG UNPAVED AREAS.

PHASING NOTES

PHASE 1 (SEE SHEETS TC-02 THRU TC-03 FOR DETAIL)

INSTALL ADVANCE WARNING SIGNS ON US 17 AND ALL SIDE STREETS IN ACCORDANCE WITH NCDOT STD. 1101.01

CLOSE THE NORTHBOUND TRAVEL ON MIDDLE SOUND LOOP ROAD AND PROVIDE ONE-LANE TWO-WAY FLAGGER CONTROL. FLAGGING OPERATIONS MUST BE COORDINATED WITH THE EXISITNG TRAFFIC SIGNAL AT US 17 AND MIDDLE SOUND LOOP ROAD TO PREVENT THE SOUTHBOUND QUEUE ON MIDDLE SOUND LOOP ROAD FROM EXTENDING INTO US 17.

- CONSTRUCT ASPHALT PAVEMENT (EXCLUDING FINAL 1.5"), DRAINAGE, ETC. ON EAST SIDE OF MIDDLE SOUND LOOP ROAD.

PHASE 2 (SEE SHEETS TC-04 THRU TC-07 FOR DETAIL)

INSTALL ADVANCE WARNING SIGNS ON US 17 AND ALL SIDE STREETS IN ACCORDANCE WITH NCDOT STD. 1101.01

USING FLAGGER CONTROL, INSTALL THE TEMPORARY PAVEMENT MARKINGS ON MIDDLE SOUND LOOP ROAD AS SHOWN ON TC-06 AND TC-07 AND SHIFT TRAFFIC INTO THE NEW PATTERN.

CLOSE THE OUTSIDE EASTBOUND TRAVEL LANE ON US 17.

- CONSTRUCT ASPHALT PAVEMENT, PAVEMENT MARKINGS, DRAINIAGE, ETC. ON SOUTH SIDE OF US 17.
- CONSTRUCT SITE UTILITY TIE INS (SEE SITE PLANS FOR DETAIL)

CLOSE THE SOUTHBOUND TRAVEL ON MIDDLE SOUND LOOP ROAD AND PROVIDE ONE-LANE TWO-WAY FLAGGER CONTROL. FLAGGING OPERATIONS MUST BE COORDINATED WITH THE EXISITNG TRAFFIC SIGNAL AT US 17 AND MIDDLE SOUND LOOP ROAD TO PREVENT THE SOUTHBOUND QUEUE ON MIDDLE SOUND LOOP ROAD FROM EXTENDING INTO US 17.

- CONSTRUCT ASPHALT PAVEMENT (EXCLUDING FINAL 1.5"), CONCRETE ISLAND, DRAINAGE, ETC. ON WEST SIDE OF MIDDLE SOUND LOOP ROAD.
- CONSTRUCT SITE UTILITY TIE INS (SEE SITE PLANS FOR DETAIL)

PHASE 3

INSTALL ADVANCE WARNING SIGNS ON US 17 AND ALL SIDE STREETS IN ACCORDANCE WITH NCDOT STD. 1101.01

CLOSE THE OUTSIDE WESTBOUND TRAVEL LANE ON US 17 AT THE INTERSECTION WITH MIDDLE SOUND LOOP ROAD AND CLOSE THE SOUTHBOUND THRU/RIGHT TURN LANE ON MIDDLE SOUND LOOP ROAD AT US 17 AND SHIFT TRAFFIC INTO THE OUTSIDE LEFT TURN LANE.

- CONSTRUCT ASPHALT PAVEMENT, PAVEMENT MARKINGS, DRAINIAGE, ETC. ON WEST SIDE OF MIDDLE SOUND LOOP ROAD.

PHASE 4

INSTALL ADVANCE WARNING SIGNS ON US 17 AND ALL SIDE STREETS IN ACCORDANCE WITH NCDOT STD. 1101.01

USING FLAGGER CONTROL, INSTALL FINAL 1.5" ASPHALT PAVEMENT AND FINAL PAVEMENT MARKINGS ON MIDDLE SOUND LOOP ROAD.

NORTH CAROLINA PROFESSIONAL ENGINEER SEAL 31033 JOHN G. TOWNSEND
NOT FOR CONSTRUCTION

FINAL

DAVENPORT
HOME OFFICE
305 WEST FOURTH STREET, SUITE 2A
WINSTON-SALEM, NC 27101
336.744.1636 www.davenportworld.com
NCBELS FIRM LICENSE NO. C-2522

PROJECT: 14-236
DATE: 07/2616
DESIGNED BY: JGT
DRAWN BY: JGT
CHECKED BY: DRC
SCALE: AS NOTED

REVISIONS		
NO.	DATE	DESCRIPTION

CLIENT:
HALPERN DEVELOPMENT COMPANY, LLC
4799 NORTHSIDE DRIVE
ATLANTA, GA 30327
P: (404) 290-1975

PROJECT:
OGDEN MARKET PLACE
WILMINGTON, NC

TITLE:
TRAFFIC CONTROL PLANS
GENERAL NOTES

SHEET NO.
TC-01

THIS DOCUMENT, TOGETHER WITH THE CONCEPTS AND DESIGNS PRESENTED THEREIN, IS INTENDED ONLY FOR THE SPECIFIC PURPOSE AND CLIENT FOR WHICH IT WAS PREPARED. REUSE OF OR IMPROPER RELIANCE UPON THIS DOCUMENT BY OTHERS, WITHOUT WRITTEN AUTHORIZATION AND ADAPTATION BY DAVENPORT, SHALL BE WITHOUT LIABILITY TO DAVENPORT AND SHALL BE A VIOLATION OF THE AGREEMENT BETWEEN DAVENPORT AND ITS CLIENT.

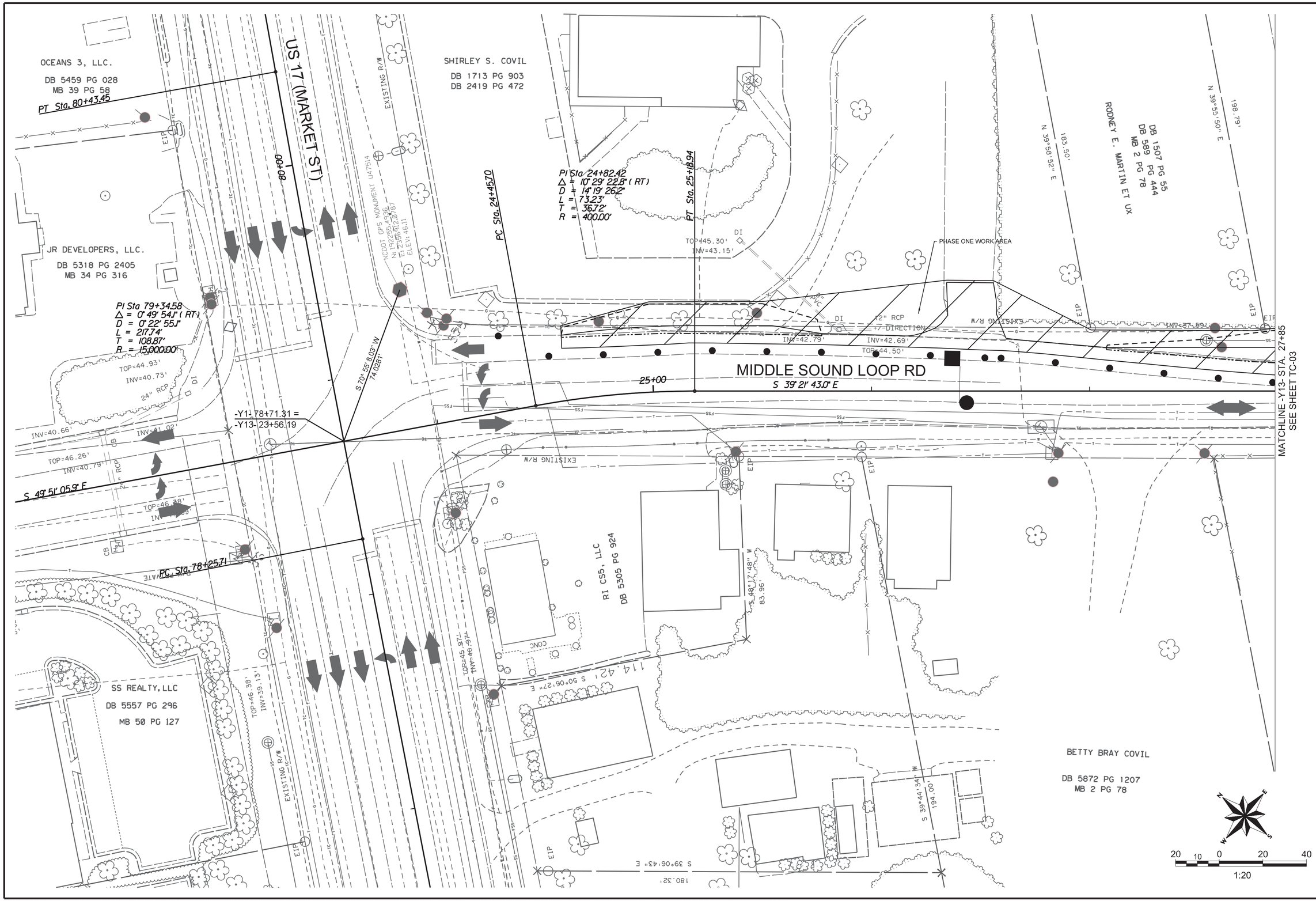

NORTH CAROLINA PROFESSIONAL ENGINEER SEAL 11533 JOHN G. TOWNSEND

FINAL

DAVENPORT
HOME OFFICE
305 WEST FOURTH STREET, SUITE 2A
WINSTON-SALEM, NC 27101
336.744.1636 www.davenportworld.com
NCBELS FIRM LICENSE NO. C-2522

PROJECT:	14-236
DATE:	07/26/16
DESIGNED BY:	JGT
DRAWN BY:	JGT
CHECKED BY:	DRC
SCALE:	AS NOTED

REVISIONS

NO.	DATE	DESCRIPTION

CLIENT:
HALPERN DEVELOPMENT COMPANY, LLC
4799 NORTHSIDE DRIVE
ATLANTA, GA 30327
P: (404) 290-1975

PROJECT:
OGDEN MARKET PLACE
WILMINGTON, NC

TITLE:
TRAFFIC CONTROL PLANS
PHASE ONE

SHEET NO.
TC-02

THIS DOCUMENT, TOGETHER WITH THE CONCEPTS AND DESIGNS PRESENTED THEREIN, IS INTENDED ONLY FOR THE SPECIFIC PURPOSE AND CLIENT FOR WHICH IT WAS PREPARED. REUSE OF OR IMPROPER RELIANCE UPON THIS DOCUMENT BY OTHERS, WITHOUT WRITTEN AUTHORIZATION AND ADAPTATION BY DAVENPORT, SHALL BE WITHOUT LIABILITY TO DAVENPORT AND SHALL BE A VIOLATION OF THE AGREEMENT BETWEEN DAVENPORT AND ITS CLIENT.

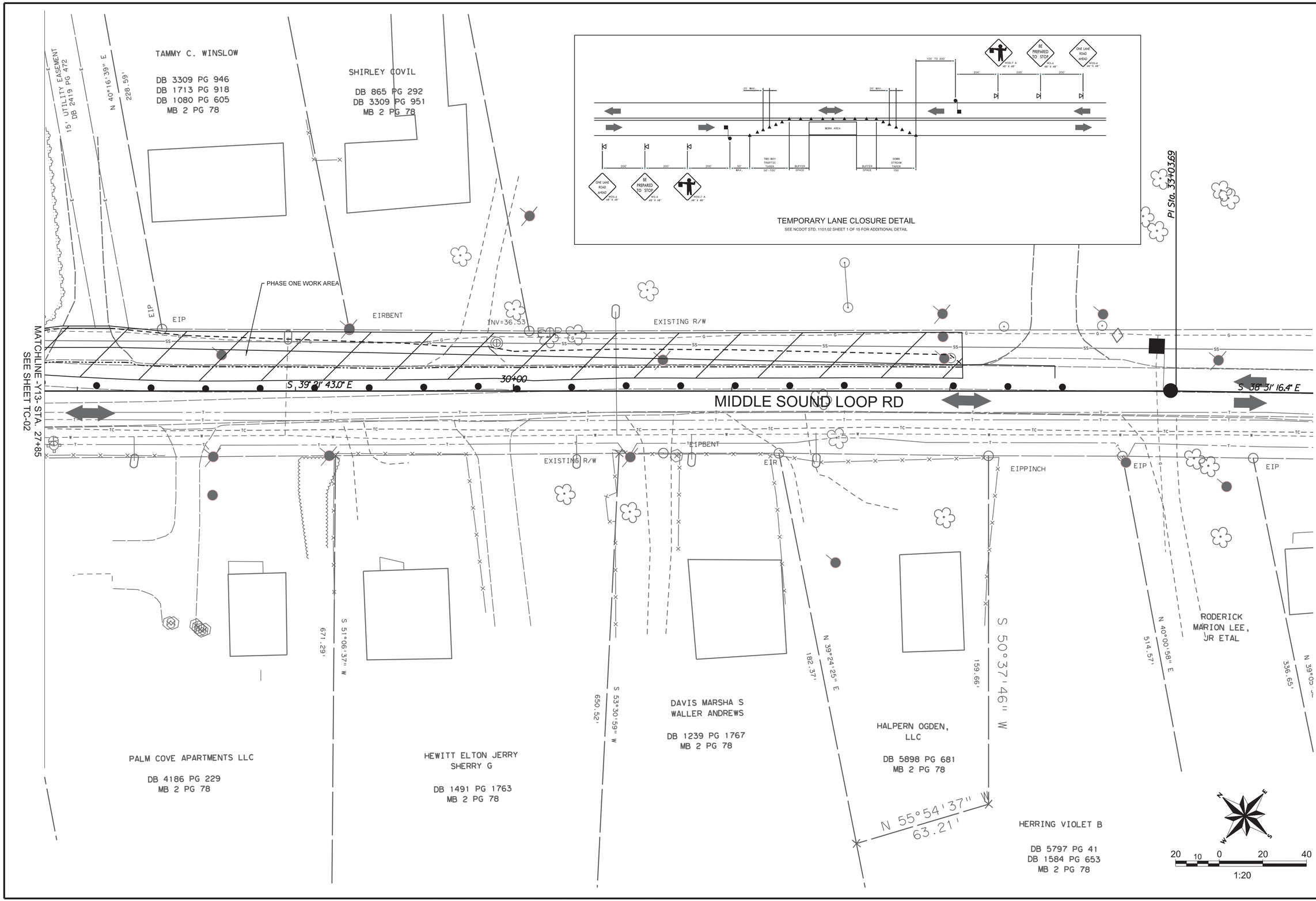

NORTH CAROLINA PROFESSIONAL ENGINEER SEAL 33533 JOHN G. TOWNSEND

FINAL

DAVENPORT
HOME OFFICE
305 WEST FOURTH STREET, SUITE 2A
WINSTON-SALEM, NC 27101
336.744.1636 www.davenportworld.com
NCBELS FIRM LICENSE NO. C-2522

PROJECT:	14-236
DATE:	07/2616
DESIGNED BY:	JGT
DRAWN BY:	JGT
CHECKED BY:	DRC
SCALE:	AS NOTED

REVISIONS

NO.	DATE	DESCRIPTION

CLIENT: HALPERN DEVELOPMENT COMPANY, LLC
4799 NORTHSIDE DRIVE
ATLANTA, GA 30327
P: (404) 290-1975

PROJECT: OGDEN MARKET PLACE
WILMINGTON, NC

TITLE: TRAFFIC CONTROL PLANS
PHASE ONE

SHEET NO.
TC-03

THIS DOCUMENT, TOGETHER WITH THE CONCEPTS AND DESIGNS PRESENTED THEREIN, IS INTENDED ONLY FOR THE SPECIFIC PURPOSE AND CLIENT FOR WHICH IT WAS PREPARED. REUSE OF OR IMPROPER RELIANCE UPON THIS DOCUMENT BY OTHERS, WITHOUT WRITTEN AUTHORIZATION AND ADAPTATION BY DAVENPORT, SHALL BE WITHOUT LIABILITY TO DAVENPORT AND SHALL BE A VIOLATION OF THE AGREEMENT BETWEEN DAVENPORT AND ITS CLIENT.

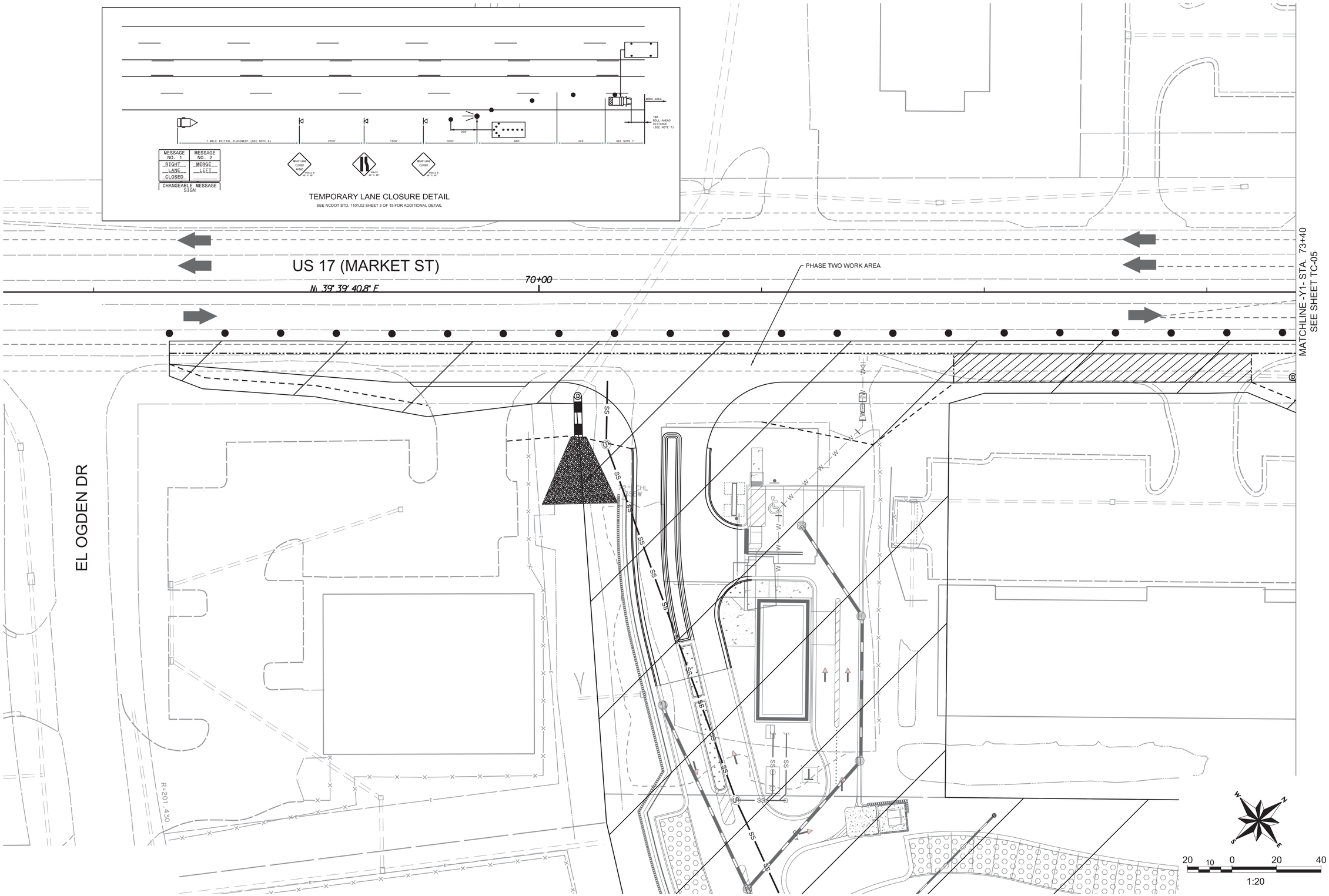

NORTH CAROLINA PROFESSIONAL ENGINEER SEAL 33533 JOHN G. TOWNSEND

FINAL

DAVENPORT
HOME OFFICE
305 WEST FOURTH STREET, SUITE 2A
WINSTON-SALEM, NC 27101
336.744.1636 www.davenportworld.com
NCBELS FIRM LICENSE NO. C-2522

PROJECT:	14-236
DATE:	07/26/16
DESIGNED BY:	JGT
DRAWN BY:	JGT
CHECKED BY:	DRC
SCALE:	AS NOTED

REVISIONS

NO.	DATE	DESCRIPTION

CLIENT:
HALPERN DEVELOPMENT COMPANY, LLC
4799 NORTHSIDE DRIVE
ATLANTA, GA 30327
P: (404) 290-1975

PROJECT:
OGDEN MARKET PLACE
WILMINGTON, NC

TITLE:
TRAFFIC CONTROL PLANS
PHASE TWO

SHEET NO.
TC-04

THIS DOCUMENT, TOGETHER WITH THE CONCEPTS AND DESIGNS PRESENTED THEREIN, IS INTENDED ONLY FOR THE SPECIFIC PURPOSE AND CLIENT FOR WHICH IT WAS PREPARED. REUSE OF OR IMPROPER RELIANCE UPON THIS DOCUMENT BY OTHERS, WITHOUT WRITTEN AUTHORIZATION AND ADAPTATION BY DAVENPORT, SHALL BE WITHOUT LIABILITY TO DAVENPORT AND SHALL BE A VIOLATION OF THE AGREEMENT BETWEEN DAVENPORT AND ITS CLIENT.

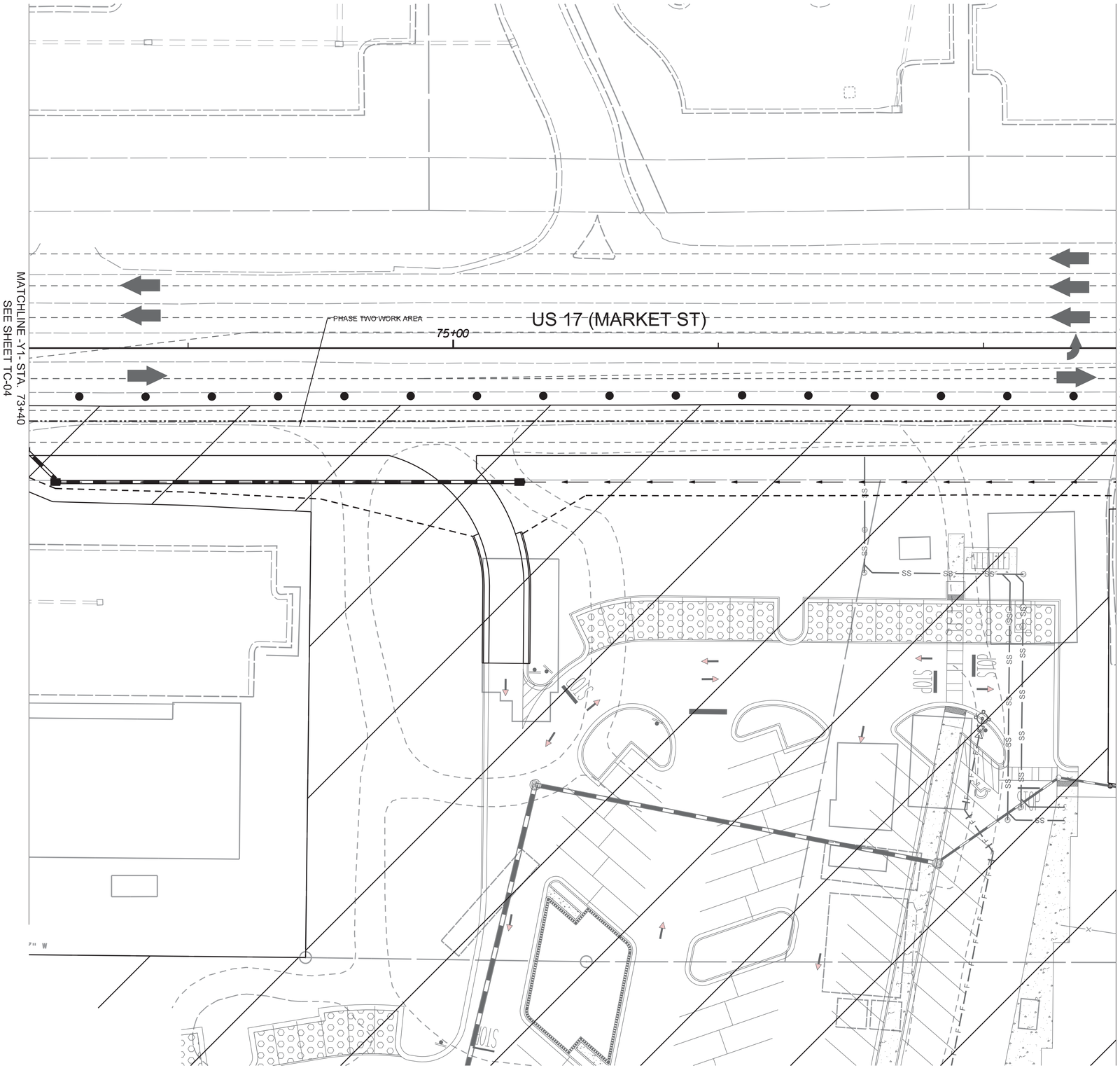

20 10 0 20 40

1:20

NORTH CAROLINA PROFESSIONAL SEAL 053 ENGINEER JOHN G. TOWNSEND

FINAL

DAVENPORT
HOME OFFICE
305 WEST FOURTH STREET, SUITE 2A
WINSTON-SALEM, NC 27101
336.744.1936 www.davenportworld.com
NCBELS FIRM LICENSE NO. C-2322

PROJECT:	14-236
DATE:	07/26/16
DESIGNED BY:	JGT
DRAWN BY:	JGT
CHECKED BY:	DRC
SCALE:	AS NOTED

REVISIONS

NO.	DATE	DESCRIPTION

CLIENT:
HALPERN DEVELOPMENT COMPANY, LLC
4799 NORTHSIDE DRIVE
ATLANTA, GA 30327
P: (404) 290-1975

PROJECT:
OGDEN MARKET PLACE
WILMINGTON, NC

TITLE:
TRAFFIC CONTROL PLANS
PHASE TWO

SHEET NO.
TC-05

THIS DOCUMENT, TOGETHER WITH THE CONCEPTS AND DESIGNS PRESENTED THEREIN, IS INTENDED ONLY FOR THE SPECIFIC PURPOSE AND CLIENT FOR WHICH IT WAS PREPARED. REUSE OF OR IMPROPER RELIANCE UPON THIS DOCUMENT BY OTHERS, WITHOUT WRITTEN AUTHORIZATION AND ADAPTATION BY DAVENPORT, SHALL BE WITHOUT LIABILITY TO DAVENPORT AND SHALL BE A VIOLATION OF THE AGREEMENT BETWEEN DAVENPORT AND ITS CLIENT.

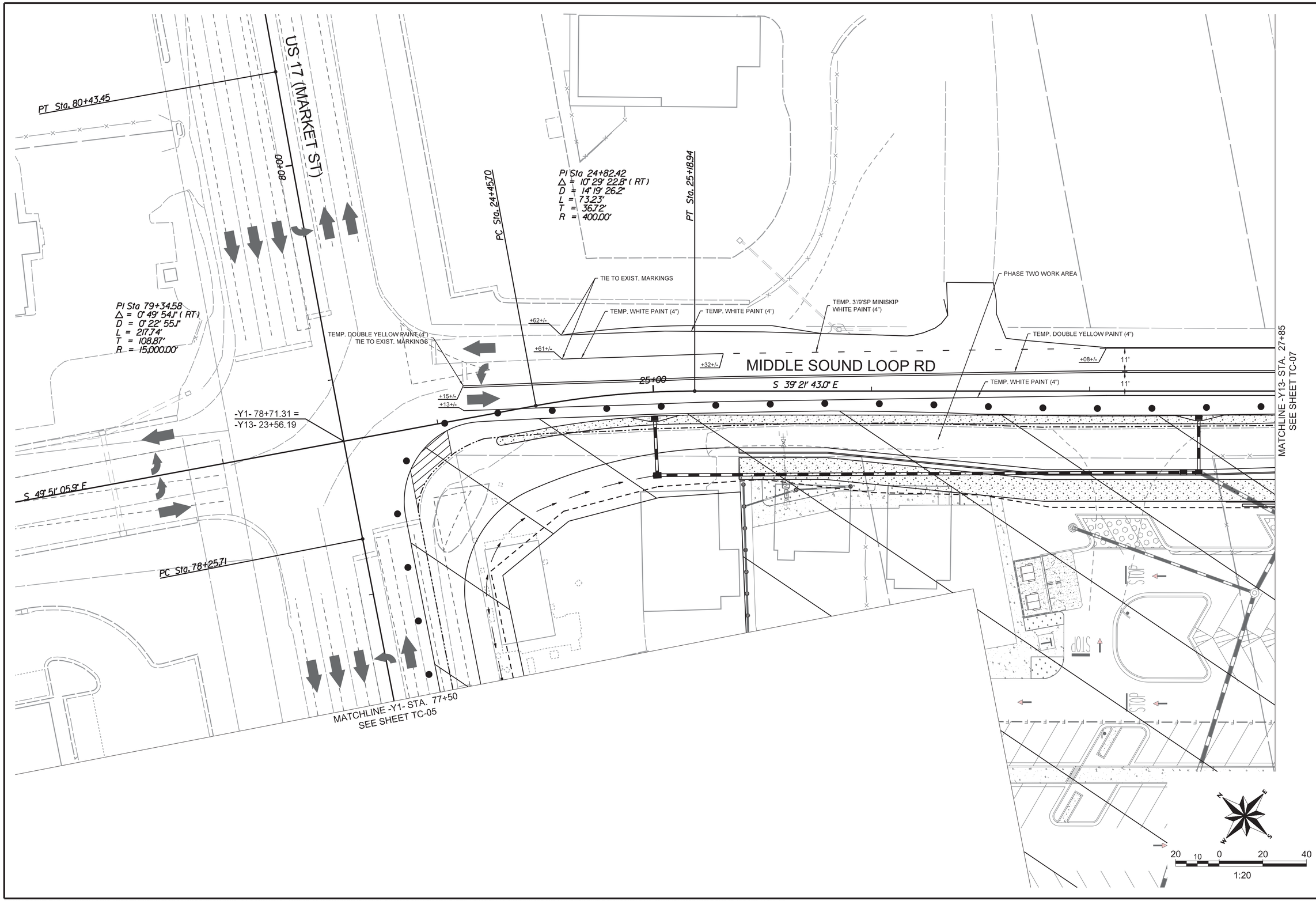

NORTH CAROLINA PROFESSIONAL ENGINEER SEAL 31533 JOHN G. TOWNSEND

FINAL

DAVENPORT
HOME OFFICE
305 WEST FOURTH STREET, SUITE 2A
WINSTON-SALEM, NC 27101
336.744.1636 www.davenportworld.com
NCBELS FIRM LICENSE NO. C-2522

PROJECT:	14-236
DATE:	07/2616
DESIGNED BY:	JGT
DRAWN BY:	JGT
CHECKED BY:	DRC
SCALE:	AS NOTED

REVISIONS

NO.	DATE	DESCRIPTION

CLIENT:
HALPERN DEVELOPMENT COMPANY, LLC
4799 NORTHSIDE DRIVE
ATLANTA, GA 30327
P: (404) 290-1975

PROJECT:
OGDEN MARKET PLACE
WILMINGTON, NC

TITLE:
TRAFFIC CONTROL PLANS
PHASE TWO

SHEET NO.
TC-06

THIS DOCUMENT, TOGETHER WITH THE CONCEPTS AND DESIGNS PRESENTED THEREIN, IS INTENDED ONLY FOR THE SPECIFIC PURPOSE AND CLIENT FOR WHICH IT WAS PREPARED. REUSE OF OR IMPROPER RELIANCE UPON THIS DOCUMENT BY OTHERS, WITHOUT WRITTEN AUTHORIZATION AND ADAPTATION BY DAVENPORT, SHALL BE WITHOUT LIABILITY TO DAVENPORT AND SHALL BE A VIOLATION OF THE AGREEMENT BETWEEN DAVENPORT AND ITS CLIENT.

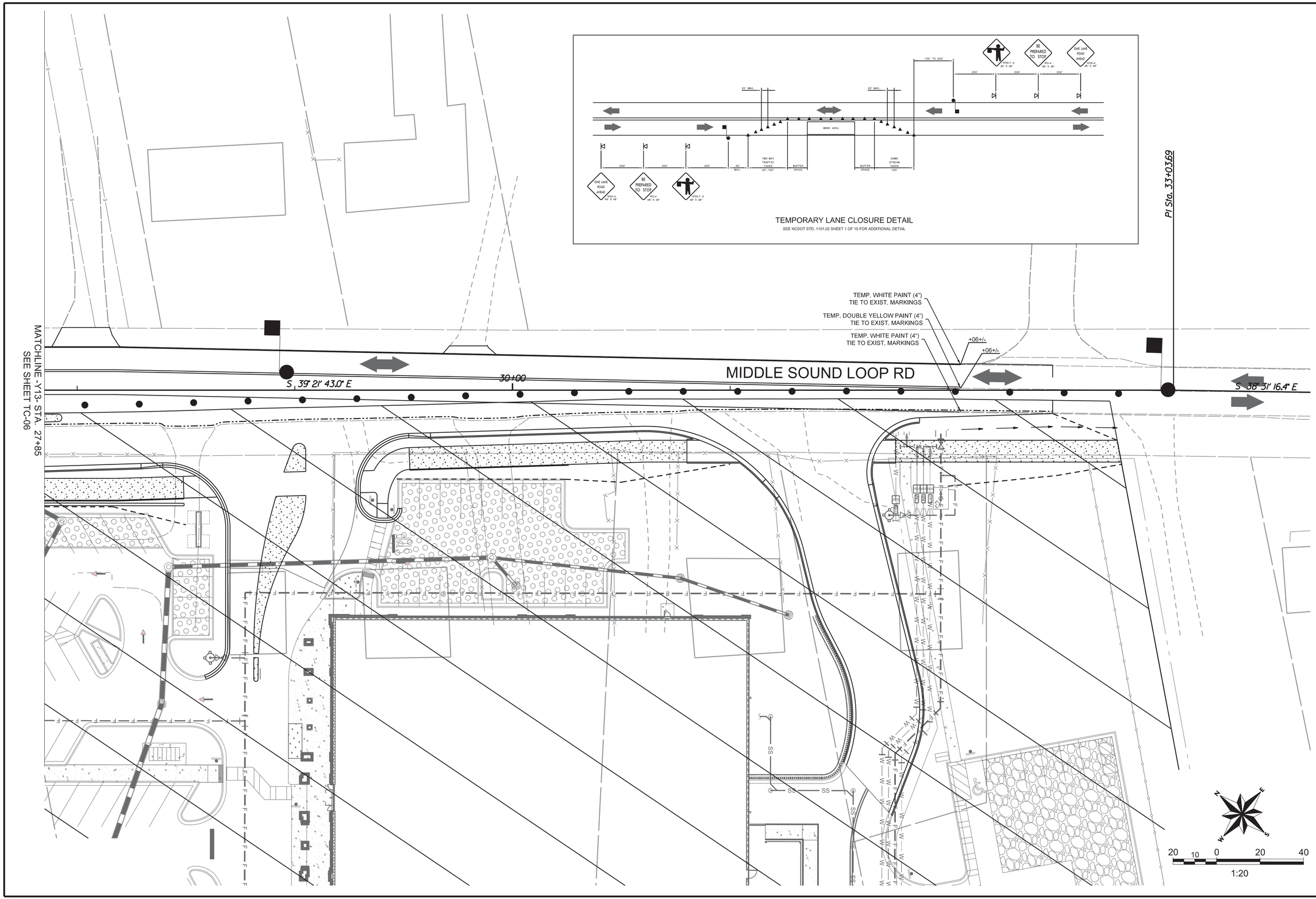

NORTH CAROLINA PROFESSIONAL ENGINEER SEAL 31533 JOHN G. TOWNSEND

FINAL

DAVENPORT
HOME OFFICE
305 WEST FOURTH STREET, SUITE 2A
WINSTON-SALEM, NC 27101
336.744.1636 www.davenportworld.com
NCBELS FIRM LICENSE NO. C-2522

PROJECT:	14-236
DATE:	07/2616
DESIGNED BY:	JGT
DRAWN BY:	JGT
CHECKED BY:	DRC
SCALE:	AS NOTED

REVISIONS

NO.	DATE	DESCRIPTION

CLIENT:
HALPERN DEVELOPMENT COMPANY, LLC
4799 NORTHSIDE DRIVE
ATLANTA, GA 30327
P: (404) 290-1975

PROJECT:
OGDEN MARKET PLACE
WILMINGTON, NC

TITLE:
TRAFFIC CONTROL PLANS
PHASE TWO

SHEET NO.
TC-07

THIS DOCUMENT, TOGETHER WITH THE CONCEPTS AND DESIGNS PRESENTED THEREIN, IS INTENDED ONLY FOR THE SPECIFIC PURPOSE AND CLIENT FOR WHICH IT WAS PREPARED. REUSE OF OR IMPROPER RELIANCE UPON THIS DOCUMENT BY OTHERS, WITHOUT WRITTEN AUTHORIZATION AND ADAPTATION BY DAVENPORT, SHALL BE WITHOUT LIABILITY TO DAVENPORT AND SHALL BE A VIOLATION OF THE AGREEMENT BETWEEN DAVENPORT AND ITS CLIENT.

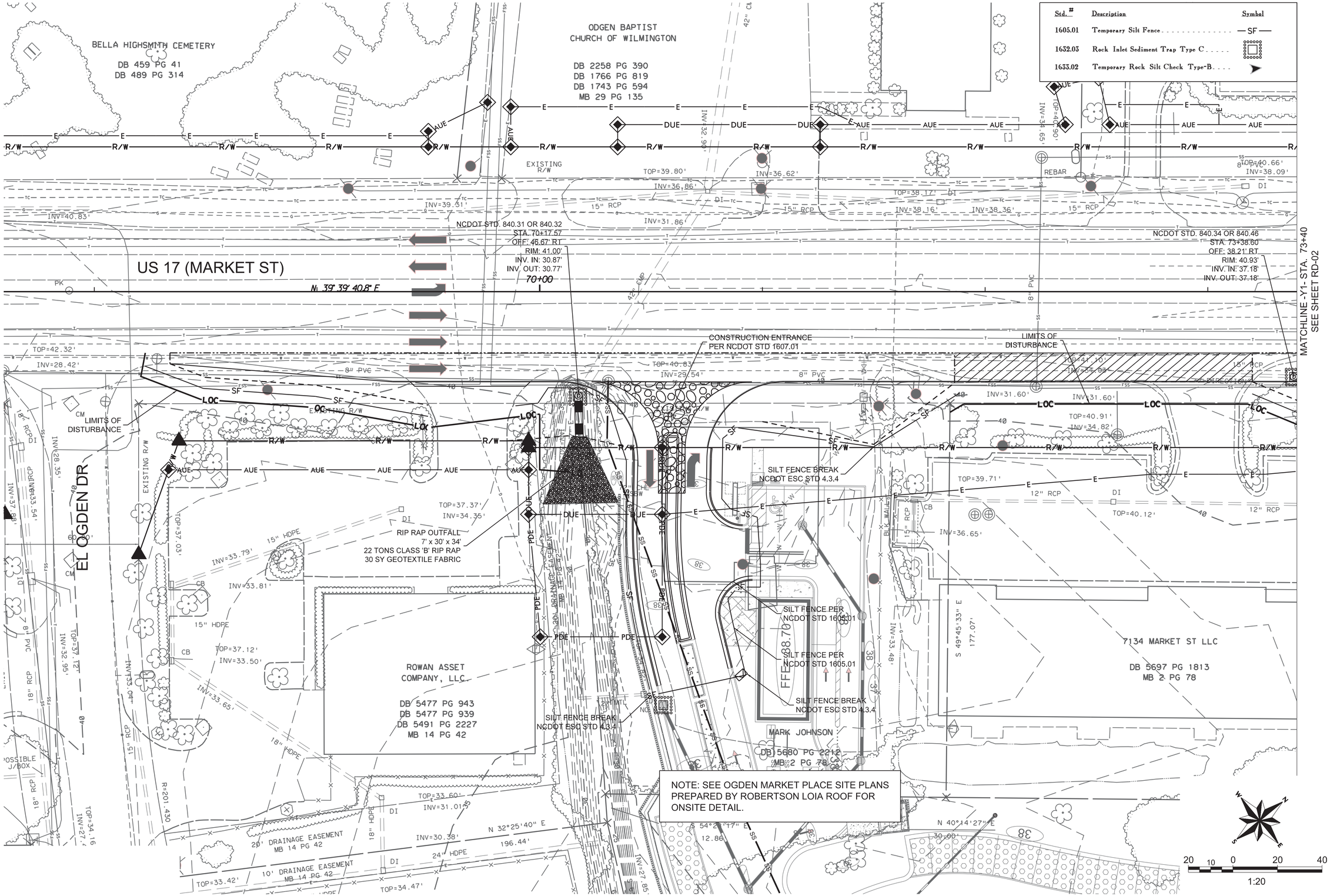

Std. #	Description	Symbol
1605.01	Temporary Silt Fence	—SF—
1632.03	Rock Inlet Sediment Trap Type C	
1633.02	Temporary Rock Silt Check Type-B	

NOTE: SEE OGDEN MARKET PLACE SITE PLANS PREPARED BY ROBERTSON LOIA ROOF FOR ONSITE DETAIL.

NORTH CAROLINA PROFESSIONAL SEAL 33533 ENGINEER JOHN G. TOWNSEND

FINAL

DAVENPORT
HOME OFFICE
305 WEST FOURTH STREET, SUITE 2A
WINSTON-SALEM, NC 27101
336.744.1636 www.davenportworld.com
NCBELS FIRM LICENSE NO. C-2522

PROJECT:	14-236
DATE:	07/2616
DESIGNED BY:	JGT
DRAWN BY:	JGT
CHECKED BY:	DRC
SCALE:	AS NOTED

REVISIONS		
NO.	DATE	DESCRIPTION

CLIENT:
HALPERN DEVELOPMENT COMPANY, LLC
4799 NORTHSIDE DRIVE
ATLANTA, GA 30327
P: (404) 290-1975

PROJECT:
OGDEN MARKET PLACE
WILMINGTON, NC

TITLE:
EROSION CONTROL PLAN

SHEET NO.
EC-01

THIS DOCUMENT, TOGETHER WITH THE CONCEPTS AND DESIGNS PRESENTED THEREIN, IS INTENDED ONLY FOR THE SPECIFIC PURPOSE AND CLIENT FOR WHICH IT WAS PREPARED. REUSE OF OR IMPROPER RELIANCE UPON THIS DOCUMENT BY OTHERS, WITHOUT WRITTEN AUTHORIZATION AND ADAPTATION BY DAVENPORT, SHALL BE WITHOUT LIABILITY TO DAVENPORT AND SHALL BE A VIOLATION OF THE AGREEMENT BETWEEN DAVENPORT AND ITS CLIENT.

Std. #	Description	Symbol
1605.01	Temporary Silt Fence	—SF—
1632.03	Rock Inlet Sediment Trap Type C	
1633.02	Temporary Rock Silt Check Type-B	

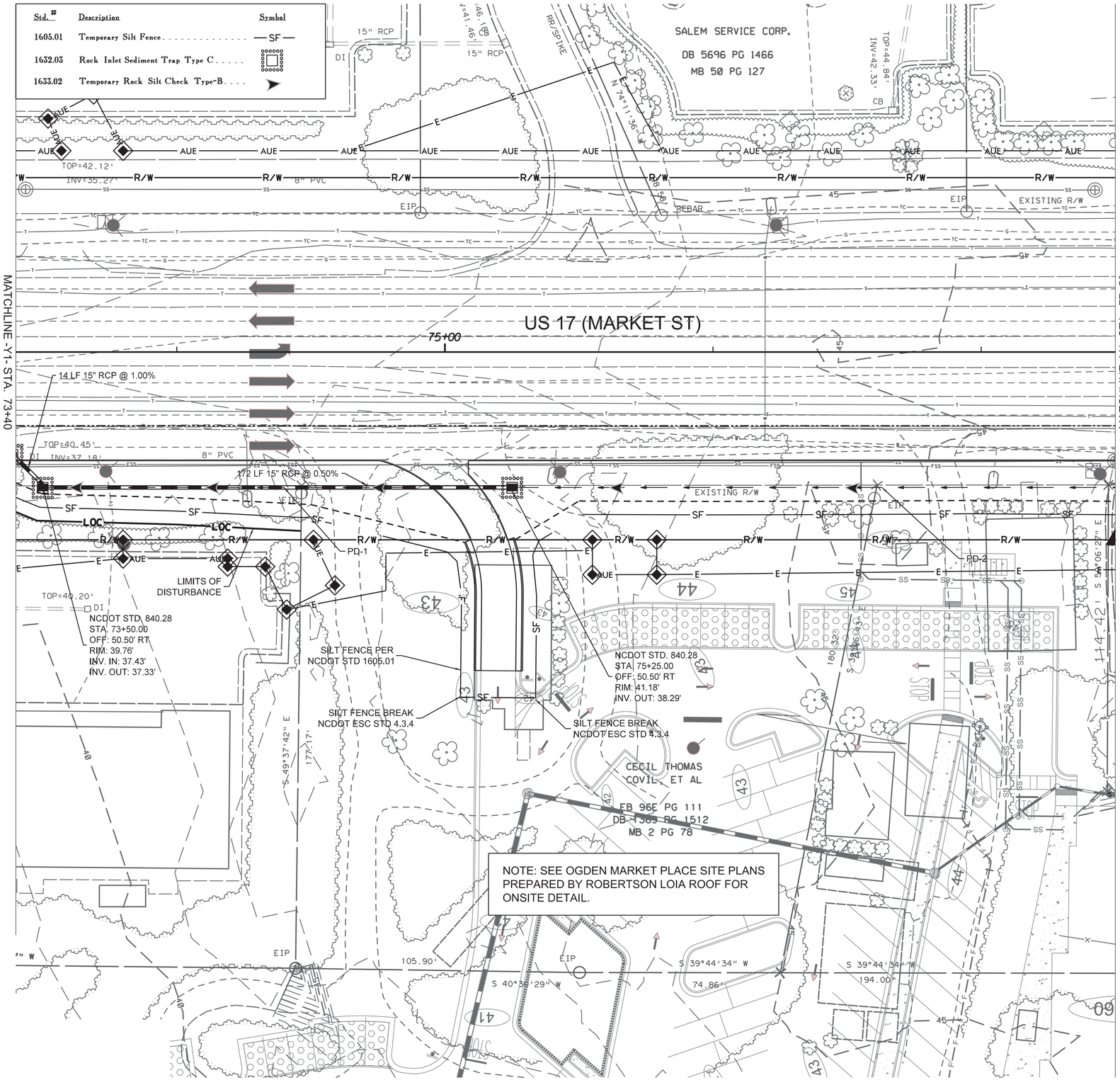

20 10 0 20 40
1:20

FINAL

DAVENPORT
HOME OFFICE
305 WEST FOURTH STREET, SUITE 2A
WINSTON-SALEM, NC 27101
336.744.1936 www.davenportworld.com
NCBELS FIRM LICENSE NO. C-2322

PROJECT: 14-236
DATE: 07/26/16
DESIGNED BY: JGT
DRAWN BY: JGT
CHECKED BY: DRC
SCALE: AS NOTED

NO.	DATE	REVISIONS DESCRIPTION

CLIENT:
HALPERN DEVELOPMENT COMPANY, LLC
4799 NORTHSIDE DRIVE
ATLANTA, GA 30327
P: (404) 290-1975

PROJECT:
OGDEN MARKET PLACE
WILMINGTON, NC

TITLE:
EROSION CONTROL PLAN

SHEET NO.
EC-02

THIS DOCUMENT, TOGETHER WITH THE CONCEPTS AND DESIGNS PRESENTED THEREIN, IS INTENDED ONLY FOR THE SPECIFIC PURPOSE AND CLIENT FOR WHICH IT WAS PREPARED. REUSE OF OR IMPROPER RELIANCE UPON THIS DOCUMENT BY OTHERS, WITHOUT WRITTEN AUTHORIZATION AND ADAPTATION BY DAVENPORT, SHALL BE WITHOUT LIABILITY TO DAVENPORT AND SHALL BE A VIOLATION OF THE AGREEMENT BETWEEN DAVENPORT AND ITS CLIENT.

Std. #	Description	Symbol
1605.01	Temporary Silt Fence	—SF—
1632.03	Rock Inlet Sediment Trap Type C	
1633.02	Temporary Rock Silt Check Type-B	

US 17 (MARKET ST)

MIDDLE SOUND LOOP RD

SHIRLEY S. COVIL
DB 1713 PG 903
DB 2419 PG 472

JR DEVELOPERS, LLC
DB 5318 PG 2405
MB 34 PG 316

RODNEY E. MARTIN ET UX
DB 1507 PG 55
DB 589 PG 444
MB 2 PG 78

SS REALTY, LLC
DB 5557 PG 296
MB 50 PG 127

BETTY GRAY COVIL

PT Sta. 80+43.45

PI Sta 79+34.58
Δ = 0° 49' 54.5" (RT)
D = 0° 22' 55.5"
L = 217.74'
T = 108.87'
R = 15,000.00'

PI Sta 24+82.42
Δ = 10° 29' 22.8" (RT)
D = 14° 19' 26.2"
L = 73.23'
T = 36.72'
R = 400.00'

PC Sta 24+45.70

PT Sta. 25+18.94

PC Sta. 78+25.71

-Y1- 78+71.31 =
-Y13- 23+56.19

S 70° 55' 8.03" W
74.0281'

S 39° 21' 43.0" E

S 49° 51' 05.9" E

N 39° 58' 52" E
183.50'

N 49° 16' 41" W

NCDOT GPS MONUMENT U47514
N: 192255.4396
E: 2357120.787
Elev: 146.11

NCDOT STD. 840.14 OR 840.15
STA. 25+00.00
OFF: 11.00' RT
RIM: 45.08'
INV. OUT: 41.68'

NCDOT STD. 840.14 OR 840.15
STA. 27+50.00
OFF: 11.00' RT
RIM: 44.18'
INV. OUT: 40.78'

NCDOT STD. 840.19 OR 840.28
STA. 25+00.00
OFF: 38.19' RT
RIM: 42.90'
INV. IN: 40.90'
INV. OUT: 40.80'

NCDOT STD. 840.01 OR 840.02
STA. 27+42.98
OFF: 36.00' RT
RIM: 43.72'
INV. IN: 39.61'
INV. OUT: 39.51'

4 LF 15" RCP @ 0.005

NCDOT STD. 840.01 OR 840.02
STA. 27+50.00
OFF: 36.00' RT
RIM: 43.72'
INV. IN (NW): 39.49'
INV. IN (NE): 40.32'
INV. OUT: 39.39'

23 LF 15" RCP @ 0.034

238 LF 15" RCP @ 0.005

12" RCP
+/- DIRECTION

SILT FENCE PER
NCDOT STD 1605.01

LIMITS OF
DISTURBANCE

NOTE: SEE OGDEN MARKET PLACE SITE PLANS PREPARED BY ROBERTSON LOIA ROOF FOR ONSITE DETAIL.

MATCHLINE -Y1- STA. 77+50
SEE SHEET RD-02

MATCHLINE -Y13- STA. 27+40 SEE SHEET EC-04

20 10 0 20 40
1:20

NORTH CAROLINA PROFESSIONAL SEAL 033 ENGINEER JOHN G. TOMINSKI

FINAL

DAVENPORT
HOME OFFICE
305 WEST FOURTH STREET, SUITE 2A
WINSTON-SALEM, NC 27101
336.744.1936 www.davenportworld.com
NCBELS FIRM LICENSE NO. C-2322

PROJECT: 14-236
DATE: 07/26/16
DESIGNED BY: JGT
DRAWN BY: JGT
CHECKED BY: DRC
SCALE: AS NOTED

REVISIONS

NO.	DATE	DESCRIPTION

CLIENT: HALPERN DEVELOPMENT COMPANY, LLC
4799 NORTHSIDE DRIVE
ATLANTA, GA 30327
P: (404) 290-1975

PROJECT: OGDEN MARKET PLACE
WILMINGTON, NC

TITLE: EROSION CONTROL PLAN

SHEET NO.
EC-03

THIS DOCUMENT, TOGETHER WITH THE CONCEPTS AND DESIGNS PRESENTED THEREIN, IS INTENDED ONLY FOR THE SPECIFIC PURPOSE AND CLIENT FOR WHICH IT WAS PREPARED. REUSE OF OR IMPROPER RELIANCE UPON THIS DOCUMENT BY OTHERS, WITHOUT WRITTEN AUTHORIZATION AND ADAPTATION BY DAVENPORT, SHALL BE WITHOUT LIABILITY TO DAVENPORT AND SHALL BE A VIOLATION OF THE AGREEMENT BETWEEN DAVENPORT AND ITS CLIENT.

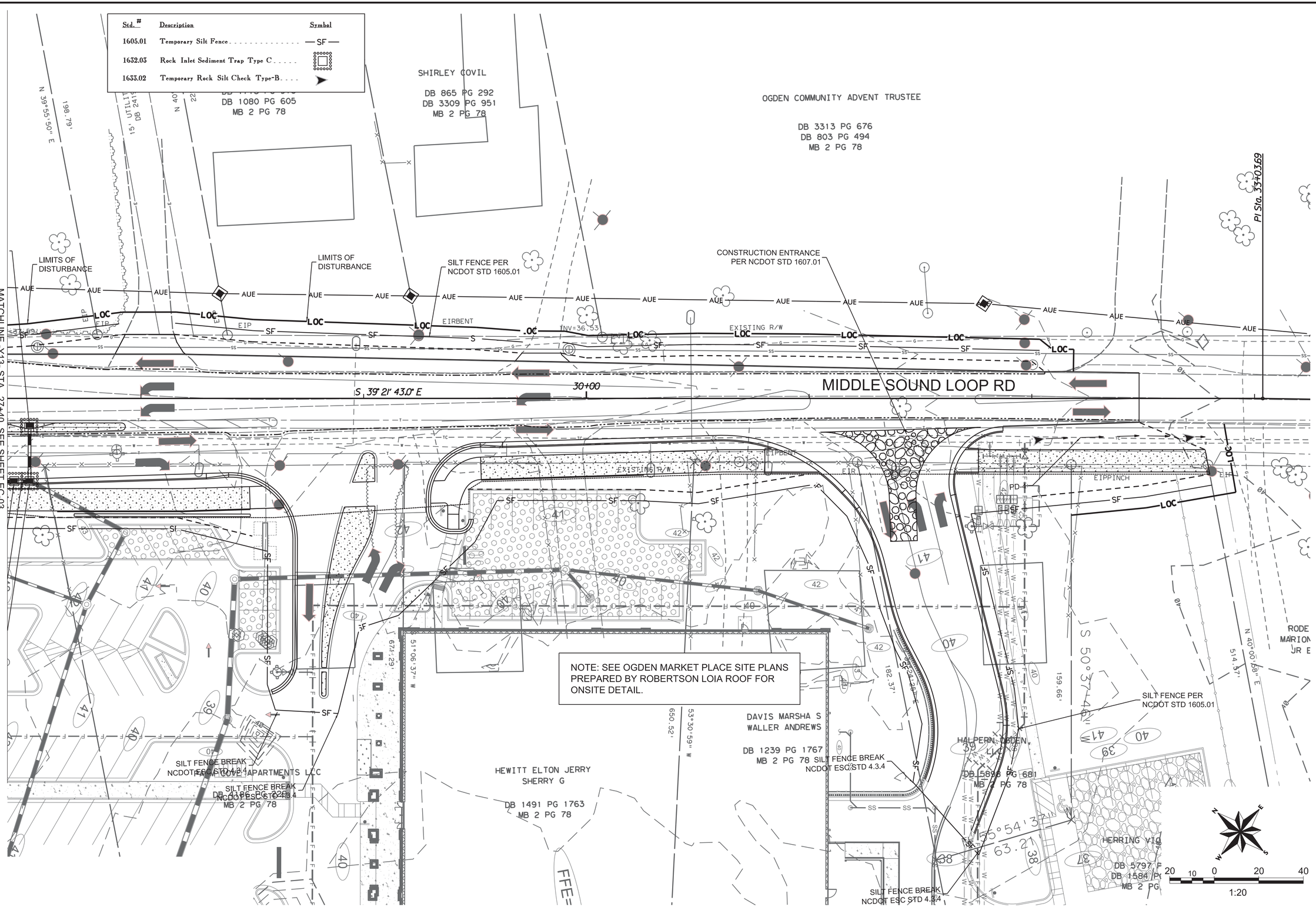

NORTH CAROLINA PROFESSIONAL ENGINEER SEAL 33633 JOHN G. TOWNSEND

FINAL

DAVENPORT
HOME OFFICE
305 WEST FOURTH STREET, SUITE 2A
WINSTON-SALEM, NC 27101
336.744.1636 www.davenportworld.com
NCBELS FIRM LICENSE NO. C-2522

PROJECT:	14-236
DATE:	07/26/16
DESIGNED BY:	JGT
DRAWN BY:	JGT
CHECKED BY:	DRC
SCALE:	AS NOTED

NO.	DATE	REVISIONS DESCRIPTION

CLIENT:
HALPERN DEVELOPMENT COMPANY, LLC
4799 NORTHSIDE DRIVE
ATLANTA, GA 30327
P: (404) 290-1975

PROJECT:
OGDEN MARKET PLACE
WILMINGTON, NC

TITLE:
EROSION CONTROL PLAN

SHEET NO.
EC-04

THIS DOCUMENT, TOGETHER WITH THE CONCEPTS AND DESIGNS PRESENTED THEREIN, IS INTENDED ONLY FOR THE SPECIFIC PURPOSE AND CLIENT FOR WHICH IT WAS PREPARED. REUSE OF OR IMPROPER RELIANCE UPON THIS DOCUMENT BY OTHERS, WITHOUT WRITTEN AUTHORIZATION AND ADAPTATION BY DAVENPORT, SHALL BE WITHOUT LIABILITY TO DAVENPORT AND SHALL BE A VIOLATION OF THE AGREEMENT BETWEEN DAVENPORT AND ITS CLIENT.

6.54

ROCK DOUGHNUT INLET PROTECTION (Temporary)

Definition A doughnut shaped rock dam that prevents sediment from getting into a drop inlet. The rock dam has a built-in sediment storage area around the outside perimeter of the structure.

Purpose To prevent sediment from entering a storm drain.

Conditions Where Practice Applies To be used at drop inlets with large drainage areas or at drop inlets that receive high velocity water flows, possibly from many directions. Sediment is captured in an excavated depression surrounding the inlet. When drainage area exceeds 1 acre, additional measures are necessary. This practice must not divert water away from the storm drain.

Design Criteria Place measure at least 30 feet away from vehicular traffic. This inlet protection can be modified to protect one side of the inlet if only one side receives flow.

Stone—A minimum 1-foot wide level area set 4 inches below the drop inlet crest will add protection against the entrance of material. Structural stone should be Class B riprap with 2:1 side slope, and a minimum crest width of 18 inches. The height of the stone should be from 2 to 3.5 feet. The outside face of the riprap should be covered in a 12-inch thick layer of #5 or #57 washed stone. Wire mesh with 2-inch openings may be placed over the drain grating but must be inspected frequently to avoid blockage by trash.

The top elevation of the stone structure must be at least 12 inches lower than the ground elevation downslope from the inlet. **It is important that all stormwater flow over the structure into the storm drain, and not past the structure.** Temporary diking below the structure may be necessary to prevent bypass flow. Material may be excavated from inside the sediment pool for this purpose (Practice 6.52, *Block and Gravel Inlet Protection*).

Construction Specifications

1. Clear the area of all debris that might hinder excavation and disposal of spoil.
2. Grade shallow depression uniformly towards the inlet with side slopes no greater than 2:1. Grade a 1-foot wide level area set 4 inches below the area adjacent to the inlet.
3. Install the Class B or Class 1 riprap in a circle around the inlet. The minimum crest width of the riprap should be 18 inches, with a minimum bottom width of 7.5 feet. The minimum height of the stone is 2 feet.
4. The outside face of the riprap is then lined with 12 inches of NC DOT #5 or #57 washed stone.

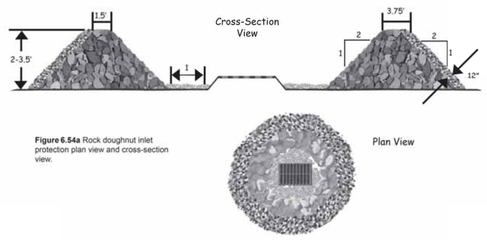

Figure 6.54a Rock doughnut inlet protection plan view and cross-section view.

Maintenance Inspect rock doughnut inlet protection at least weekly and after each significant (½ inch or greater) rainfall event and repair immediately.

To provide satisfactory inlet protection efficiency, remove sediment from the sediment pool area when the volume is decreased by half. This will help provide adequate storage volume for the next rain. Stabilize excavated material appropriately.

Take care not to damage or undercut the structure during sediment removal. Remove debris from the inlet and replace stone as needed. If the inlet was covered with wire mesh the mesh should be cleaned of debris.

When the contributing drainage area has been adequately stabilized, remove all materials and dispose of sediment properly. Bring the disturbed area to the grade of the drop inlet. Smooth and compact it as needed.

Appropriately stabilize all bare areas around the inlet with ground cover.

References *Inlet protection*
6.52, Block and Gravel Inlet Protection (Temporary)

North Carolina Department of Transportation
Erosion & Sedimentation Guidelines for Division Maintenance Operation, 1993.

6.55

ROCK PIPE INLET PROTECTION

Definition A horseshoe shaped rock dam structure at a pipe inlet with a sediment storage area around the outside perimeter of the structure.

Purpose To prevent sediment from entering, accumulating in and being transferred by a culvert or storm drainage system prior to stabilization of the disturbed drainage area. This practice allows early use of the storm drainage system.

Conditions Where Practice Applies Rock pipe inlet protection may be used at pipes with a maximum diameter of 36 inches. This inlet protection may be used to supplement additional sediment traps or basins at the pipe outlet, or used in combination with an excavated sediment storage area to serve as a temporary sediment trap. Pipe inlet protection should be provided to protect the storm drainage system and downstream areas from sedimentation until permanent stabilization of the disturbed drainage area.

Do not install this measure in an intermittent or perennial stream.

Planning Considerations When construction on a project reaches a stage where culverts and other storm drainage structures are installed and many areas are brought to the desired grade, there is a need to protect the points where runoff can leave the site through culverts or storm drains. Similar to drop and curb inlets, culverts receiving runoff from disturbed areas can convey large amounts of sediment to lakes or streams. Even if the pipe discharges into a sediment trap or basin, the pipe or pipe system itself may clog with sediment.

Design Criteria When used in combination with an excavated sediment storage area to serve as a temporary sediment trap, the design criteria for temporary sediment traps must be satisfied. The maximum drainage area should be 5 acres, and 3600 cubic feet of sediment storage per acre of disturbed drainage area should be provided.

The minimum stone height should be 2 feet, with side slopes no steeper than 2:1. The stone "horseshoe" around the pipe inlet should be constructed of Class B or Class I riprap, with a minimum crest width of 3 feet. The outside face of the riprap should be covered with a 12-inch thick layer of #5 or #57 washed stone.

In preparing plans for rock pipe inlet protection, it is important to protect the embankment over the pipe from overtopping. The top of the stone should be a minimum of 1 foot below the top of the fill over the pipe. The stone should tie into the fill on both sides of the pipe. The inside toe of the stone should be no closer than 2 feet from the culvert opening to allow passage of high flows.

The sediment storage area should be excavated upstream of the rock pipe inlet protection, with a minimum depth of 18 inches below grade.

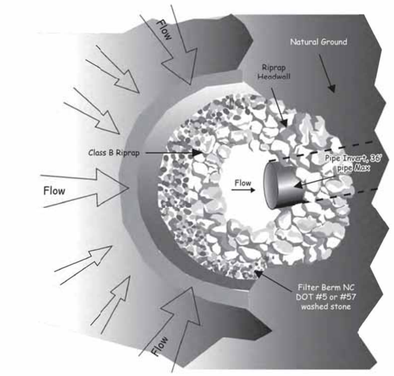

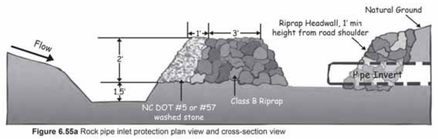

Figure 6.55a Rock pipe inlet protection plan view and cross-section view

Construction Specifications

1. Clear the area of all debris that might hinder excavation and disposal of spoil.
2. Install the Class B or Class 1 riprap in a semi-circle around the pipe inlet. The store should be built up higher on each end where it ties into the embankment. The minimum crest width of the riprap should be 3 feet, with a minimum bottom width of 11 feet. The minimum height should be 2 feet, but also 1 foot lower than the shoulder of the embankment or diversions.
3. A 1 foot thick layer of NC DOT #5 or #57 stone should be placed on the outside slope of the riprap.
4. The sediment storage area should be excavated around the outside of the stone horseshoe 18 inches below natural grade.
5. When the contributing drainage area has been stabilized, fill depression and establish final grading elevations, compact area properly, and stabilize with ground cover.

Maintenance Inspect rock pipe inlet protection at least weekly and after each significant (½ inch or greater) rainfall event and repair immediately. Remove sediment and restore the sediment storage area to its original dimensions when the sediment has accumulated to one-half the design depth of the trap. Place the sediment that is removed in the designated disposal area and replace the contaminated part of the gravel facing.

Check the structure for damage. Any riprap displaced from the stone horseshoe must be replaced immediately.

After all the sediment-producing areas have been permanently stabilized, remove the structure and all the unstable sediment. Smooth the area to blend with the adjoining areas and provide permanent ground cover (*Surface Stabilization*).

References *Inlet protection*
6.52, Block and Gravel Inlet Protection (Temporary)

Sediment Trap and Barriers
6.60, Temporary Sediment Trap

Surface Stabilization
6.15, Riprap

North Carolina Department of Transportation
Erosion & Sedimentation Guidelines for Division Maintenance Operation, 1993.

Virginia Erosion and Sediment Control Handbook. 1992. STD & SPEC 3.08, Culvert Inlet Protection. pages III-46 - III-51 (Culvert Inlets Sediment Trap).

6.62

SEDIMENT FENCE

Definition A temporary sediment control measure consisting of fabric buried at the bottom, stretched, and supported by posts.

Purpose To retain sediment from small disturbed areas by reducing the velocity of sheet flows to allow sediment deposition.

Conditions Where Practice Applies Below small-disturbed areas that are less than ¼ acre per 100 feet of fence.

Where runoff can be stored behind the sediment fence without damaging the fence or the submerged area behind the fence.

Do not install sediment fences across streams, ditches, or waterways, or other areas of concentrated flow.

Sediment fence should be placed along topographic elevation contours, where it can intercept stormwater runoff that is in dispersed sheet flow. Sediment fence should not be used alone below graded slopes greater than 10 feet in height.

Planning Considerations A sediment fence is a system to retain sediment on the construction site. The fence retains sediment primarily by retarding flow and promoting deposition. In operation, generally the fence becomes clogged with fine particles, which reduce the flow rate. This causes a pond to develop behind the fence. The designer should anticipate ponding and provide sufficient storage areas and overflow outlets to prevent flows from overtopping the fence. Since sediment fences are not designed to withstand high water levels, locate them so that only shallow pools can form. Tie the ends of a sediment fence into higher ground to prevent flow around the end of the fence before the pool reaches design level. Curling each end of the fence uphill in a "J" pattern may be appropriate to prevent end flow. Provide stabilized outlets to protect the fence system and release storm flows that exceed the design storm.

Deposition occurs as the storage pool forms behind the fence. The designer can direct flows to specified deposition areas through appropriate positioning of the fence or by providing an excavated area behind the fence. Plan deposition areas at accessible points to promote routine cleanout and maintenance. Show deposition areas in the erosion and sedimentation control plan. A sediment fence acts as a diversion if placed slightly off the contour. A maximum slope of 2 percent is recommended. This technique may be used to control shallow, uniform flows from small disturbed areas and to deliver sediment-laden water to deposition areas. The anchoring of the toe of the fence should be reinforced with 12 inches of NC DOT #5 or #57 washed stone when flow will run parallel to the toe of the fence.

Sediment fences serve no function along ridges or near drainage divides where there is little movement of water. Confining or diverting runoff unnecessarily with a sediment fence may create erosion and sedimentation problems that would not otherwise occur.

Straw barriers have only a 0-20% trapping efficiency and are inadequate. Straw bales may not be used in place of sediment fence. Prefabricated sediment fence with the fabric already stapled to thin wooden posts does not meet minimum standards specified later in this section.

Anchoring of sediment fence is critical. The toe of the fabric must be anchored in a trench backfilled with compacted earth. Mechanical compaction must be provided in order for the fence to effectively pond runoff.

Design Criteria Ensure that drainage area is so greater than ¼ acre per 100 feet of fence. This is the maximum drainage area when the slope is less than 2 percent. Where all runoff is to be stored behind the fence, ensure that the maximum slope length behind a sediment fence does not exceed the specifications shown in Table 6.62a. The shorter slope length allowed for steeper slopes will greatly reduce the maximum drainage area. For example, a 10–20 % slope may have a maximum slope length of 25 feet. For a 100-foot length of sediment fence, the drainage area would be 25ft X 100ft = 2500sq.ft., or 0.06 acres.

Table 6.62a Maximum Slope Length and Slope for which Sediment Fence is Applicable

Slope	Slope Length (ft)	Maximum Area (ft²)
<2%	100	10,000
2 to 5%	75	7,500
5 to 10%	50	5,000
10 to 20%	25	2,500
>20%	15	1,500

Make the fence stable for the 10-year peak storm runoff.

Ensure that the depth of impounded water does not exceed 1.5 feet at any point along the fence.

If non-erosive outlets are provided, slope length may be increased beyond that shown in Table 6.62a, but runoff from the area should be determined and bypass capacity and erosion potential along the fence must be checked. The velocity of the flow at the outlet or along the fence should be in keeping with Table 8.05d, Appendix 8.05.

Provide a riprap splash pad or other outlet protection device for any point where flow may overtop the sediment fence, such as natural depressions or swales. Ensure that the maximum height of the fence at a protected, reinforced outlet does not exceed 2 feet and that support post spacing does not exceed 4 feet.

The design life of a synthetic sediment fence should be 6 months.

Construction Specifications

MATERIALS

1. Use a synthetic filter fabric of at least 95% by weight of polyolefins or polyester, which is certified by the manufacturer or supplier as conforming to the requirements in ASTM D 6461, which is shown in part in Table 6.62b.

Synthetic filter fabric should contain ultraviolet ray inhibitors and stabilizers to provide a minimum of 6 months of expected usable construction life at a temperature range of 0 to 120° F.

2. Ensure that posts for sediment fences are 1.33 lb/linear ft steel with a minimum length of 5 feet. Make sure that steel posts have projections to facilitate fastening the fabric.
3. For reinforcement of standard strength filter fabric, use wire fence with a minimum 14 gauge and a maximum mesh spacing of 6 inches.

Table 6.62b Specifications For Sediment Fence Fabric

Temporary Silt Fence Material Property Requirements					
	Test Material	Units	Supported[1] Silt Fence	Un-Supported[1] Silt Fence	Type of Value
Grab Strength	ASTM D 4632	N (lbs)			
Machine Direction			400	550	MARV
			(90)	(90)	
X-Machine Direction			400	450	MARV
			(90)	(90)	
Permittivity[2]	ASTM D 4491	sec-1	0.05	0.05	MARV
Apparent Opening Size[2]	ASTM D 4751	mm	0.60	0.60	Max. ARV[3]
		(US Sieve #)	(30)	(30)	
Ultraviolet Stability	ASTM D 4355	% Retained Strength	70% after 500h of exposure	70% after 500f of exposure	Typical

[1] Silt Fence support shall consist of 14 gage steel wire with a mesh spacing of 150 mm (6 inches), or prefabricated polymer mesh of equivalent strength
[2] These default values are based on empirical evidence with a variety of sediment. For environmentally sensitive areas, a review of previous experience and/or site or regionally specific geotextile tests in accordance with Test Method D 5141 should be performed by the agency to confirm suitability of these requirements.
[3] As measured in accordance with Test Method D 4632.

CONSTRUCTION

1. Construct the sediment barrier of standard strength or extra strength synthetic filter fabrics.
2. Ensure that the height of the sediment fence does not exceed 24 inches above the ground surface. (Higher fences may impound volumes of water sufficient to cause failure of the structure.)
3. Construct the filter fabric from a continuous roll cut to the length of the barrier to avoid joints. When joints are necessary, securely fasten the filter cloth only at a support post with 4 feet minimum overlap to the next post.
4. Support standard strength filter fabric by wire mesh fastened securely to the **upslope** side of the posts. Extend the wire mesh support to the bottom of the trench. Fasten the wire reinforcement, then fabric on the upslope side of the fence post. Wire or plastic zip ties should have minimum 50 pound tensile strength.
5. When a wire mesh support fence is used, space posts a maximum of 8 feet apart. Support posts should be driven securely into the ground a minimum of 24 inches.
6. Extra strength filter fabric with 6 feet post spacing does not require wire mesh support fence. Securely fasten the filter fabric directly to posts. Wire or plastic zip ties should have minimum 50 pound tensile strength.

THIS DOCUMENT, TOGETHER WITH THE CONCEPTS AND DESIGNS PRESENTED THEREIN, IS INTENDED ONLY FOR THE SPECIFIC PURPOSE AND CLIENT FOR WHICH IT WAS PREPARED. REUSE OF OR IMPROPER RELIANCE UPON THIS DOCUMENT BY OTHERS, WITHOUT WRITTEN AUTHORIZATION AND ADAPTATION BY DAVENPORT, SHALL BE WITHOUT LIABILITY TO DAVENPORT AND SHALL BE A VIOLATION OF THE AGREEMENT BETWEEN DAVENPORT AND ITS CLIENT.

NORTH CAROLINA PROFESSIONAL SEAL 053 ENGINEER JOHN G. TOMINSKI

FINAL

DAVENPORT
HOME OFFICE
305 WEST FOURTH STREET, SUITE 2A
WINSTON-SALEM, NC 27101
336.744.1836 www.davenportworld.com
NCBELS FIRM LICENSE NO. C-2522

PROJECT: 14-236
DATE: 07/26/16
DESIGNED BY: JGT
DRAWN BY: JGT
CHECKED BY: DRC
SCALE: AS NOTED

REVISIONS

NO.	DATE	DESCRIPTION

CLIENT: HALPERN DEVELOPMENT COMPANY, LLC
4799 NORTHSIDE DRIVE
ATLANTA, GA 30327
P: (404) 290-1975

PROJECT: OGDEN MARKET PLACE
WILMINGTON, NC

TITLE: EROSION CONTROL DETAILS

SHEET NO.
EC-05

OGDEN MARKET PLACE "V" DITCH TABLE

Ditch #	Q=CIA				2 YR Flow (CFS)	5 YR Flow (CFS)	Side Slopes		Slope (%)	Velocity (fps)	Bottom Width (ft)	Ditch Depth of Berm (ft)	Normal Depth (ft)	Temporary/Permanent Liner
	C	I_2	I_5	A (ac)			Left	Right						North American Green Specification
PD-1	0.78	5.95	6.97	0.19	0.88	1.03	2	4	1.66	1.88	0	1.5	0.43	Straw/Grass
PD-2	0.75	5.95	6.97	0.35	1.56	1.83	2	4	1.1	1.86	0	1.5	0.57	Straw/Grass
PD-3	0.77	5.95	6.97	0.21	0.96	1.13	4	2	1.0	1.59	0	1.5	0.49	Straw/Grass
PD-4	0.7	5.95	6.97	0.07	0.29	0.34	4	2	2.44	1.65	0	1.5	0.26	Straw/Grass

OGDEN MARKET PLACE RIP RAP APRON CALCS

APRON: **42" CMP**

DISCHARGE =		**100**	CFS	Assume flowing full
PIPE DIAMETER =		**42**	inches	
d50 =		**8**	inches	Figure 8.06a NCDENR Design manual
LENGTH =		**30**	feet	Figure 8.06a NCDENR Design manual
WIDTH =		**34**	feet	
dMAX	= d50 * 1.5	**12**	inches	
THICKNESS =	= dMAX * 1.5	**18**	inches	

7. Excavate a trench approximately 4 inches wide and 8 inches deep along the proposed line of posts and uplope from the barrier (Figure 6.62a)

8. Place 12 inches of the fabric along the bottom and side of the trench.

9. Backfill the trench with soil placed over the filter fabric and compact. Thorough compaction of the backfill is critical to silt fence performance.

10. Do not attach filter fabric to existing trees.

SEDIMENT FENCE INSTALLATION USING THE SLICING METHOD
Instead of excavating a trench, placing fabric and then backfilling trench, sediment fence may be installed using specially designed equipment that inserts the fabric into a cut sliced in the ground with a disc (Figure 6.62b).

Installation Specifications

1. The base of both end posts should be at least one foot higher than the middle of the fence. Check with a level if necessary.

2. Install posts 4 feet apart in critical areas and 6 feet apart on standard applications.

3. Install posts 2 feet deep on the downstream side of the silt fence, and as close as possible to the fabric, enabling posts to support the fabric from upstream water pressure.

4. Install posts with the nipples facing away from the silt fabric.

5. Attach the fabric to each post with three ties, all spaced within the top 8 inches of the fabric. Attach each tie diagonally 45 degrees through the fabric, with each puncture at least 1 inch vertically apart. Also, each tie should be positioned to hang on a post nipple when tightened to prevent sagging.

6. Wrap approximately 6 inches of fabric around the end posts anc secure with 3 ties.

7. No more than 24 inches of a 36 inch fabric is allowed above ground level.

8. The installation should be checked and corrected for any deviations before compaction.

9. Compaction is vitally imporant for effective results. Compact the soil immediately next to the silt fence fabric with the front wheel of the tractor, skid steer, or roller exerting at least 60 pounds per square inch. Compact the upstream side first, and then each side twice for a total of 4 trips.

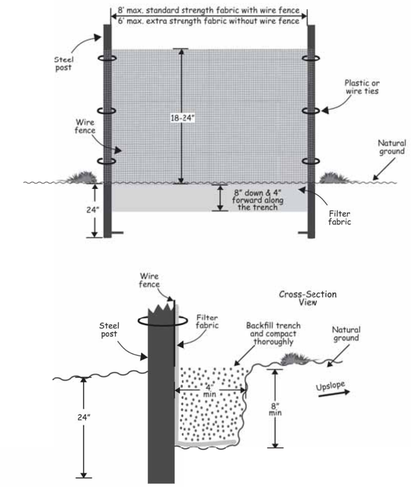

Figure 6.62a Installation detail of a sediment fence.

The Slicing Method

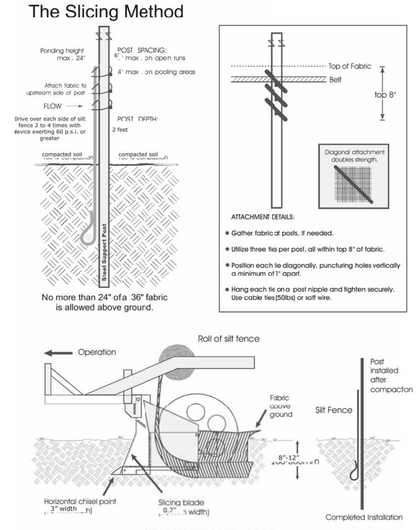

Figure 6.62b Schematics for using the slicing method to install a sediment fence. Adapted from *Silt Fence that Works*

Maintenance

Inspect sediment fences at least once a week and after each rainfall. Make any required repairs immediately.

Should the fabric of a sediment fence collapse, tear, decompose or become ineffective, replace it promptly.

Remove sediment deposits as necessary to provide adequate storage volume for the next rain and to reduce pressure on the fence. Take care to avoid undermining the fence during cleanout.

Remove all fencing materials and unstable sediment deposits and bring the area to grade and stabilize it after the contributing drainage area has been properly stabilized.

References

ASTM D 6461 – 99. "Standard Specification for Silt Fence Materials" ASTM International. For referenced ASTM standards, visit the ASTM website, www.astm.org, or contact ASTM Customer Service at service@astm.org. For Annual Book of ASTM Standards volume information, refer to the standard's Document Summary page on the ASTM website.

ASTM D 6462 – 03. "Standard Practice for Silt Fence Installation" ASTM International. For referenced ASTM standards, visit the ASTM website, www.astm.org, or contact ASTM Customer Service at service@astm.org. For Annual Book of ASTM Standards volume information, refer to the standard's Document Summary page on the ASTM website.

C. Joel Sprague, PE, Silt Fence Performance Limits and Installation Requirements. Sprague and Sprague Consulting Engineers and TRI/ Environmental, Inc.

Carpenter Erosion Control. http://www.tommy-sfm.com/

Kentucky Erosion Prevention and Sediment Control Field Manual, 2004.

Runoff Control Measures
6.20, Temporary Diversions

Outlet Protection
6.41, Outlet Stabilization Structure

Appendix
8.03, Estimating Runoff

NORTH CAROLINA PROFESSIONAL SEAL 033 ENGINEER JOHN G. TOMINSKI

FINAL

DAVENPORT
HOME OFFICE
305 WEST FOURTH STREET, SUITE 2A
WINSTON-SALEM, NC 27101
336.744.1836 www.davenportworld.com
NCBELS FIRM LICENSE NO. C-2522

PROJECT: 14-236
DATE: 07/2616
DESIGNED BY: JGT
DRAWN BY: JGT
CHECKED BY: DRC
SCALE: AS NOTED

REVISIONS

NO.	DATE	DESCRIPTION

CLIENT: HALPERN DEVELOPMENT COMPANY, LLC
4799 NORTHSIDE DRIVE
ATLANTA, GA 30327
P: (404) 290-1975

PROJECT: OGDEN MARKET PLACE
WILMINGTON, NC

TITLE: EROSION CONTROL DETAILS

SHEET NO.
EC-06

THIS DOCUMENT, TOGETHER WITH THE CONCEPTS AND DESIGNS PRESENTED THEREIN, IS INTENDED ONLY FOR THE SPECIFIC PURPOSE AND CLIENT FOR WHICH IT WAS PREPARED. REUSE OF OR IMPROPER RELIANCE UPON THIS DOCUMENT BY OTHERS, WITHOUT WRITTEN AUTHORIZATION AND ADAPTATION BY DAVENPORT, SHALL BE WITHOUT LIABILITY TO DAVENPORT AND SHALL BE A VIOLATION OF THE AGREEMENT BETWEEN DAVENPORT AND ITS CLIENT.

LEGEND

PAVEMENT MARKING LINES

---------- THERMOPLASTIC (4", 90 mils)
TA - WHITE EDGELINE
TB - YELLOW EDGELINE

---------- THERMOPLASTIC (4", 120 mils)
TC - 10FT WHITE SKIP
TD - 3 FT- 9 FT/SP WHITE MINISKIP
TE - WHITE SOLID LANE LINE
TI - YELLOW DOUBLE CENTER

---------- THERMOPLASTIC (8", 90 mils)
TO - WHITE DIAGONAL
TP - YELLOW DIAGONAL

PAVEMENT MARKING LINES

---------- THERMOPLASTIC (8", 120 mils)
TQ - WHITE CROSSWALK LINE

---------- THERMOPLASTIC (24", 120 mils)
T2 - WHITE STOPBAR

PAVEMENT MARKING SYMBOLS

---------- THERMOPLASTIC (90 mils)
UA - LEFT TURN ARROW
UB - RIGHT TURN ARROW
UC - STRAIGHT ARROW

NOTES:

1. ALL PAVEMENT MARKINGS SHALL BE TO NCDOT STANDARDS.
2. REMOVE ALL CONFLICTING EXISTING PAVEMENT MARKINGS AND SIGNS WITHIN THE CONSTRUCTION AREA

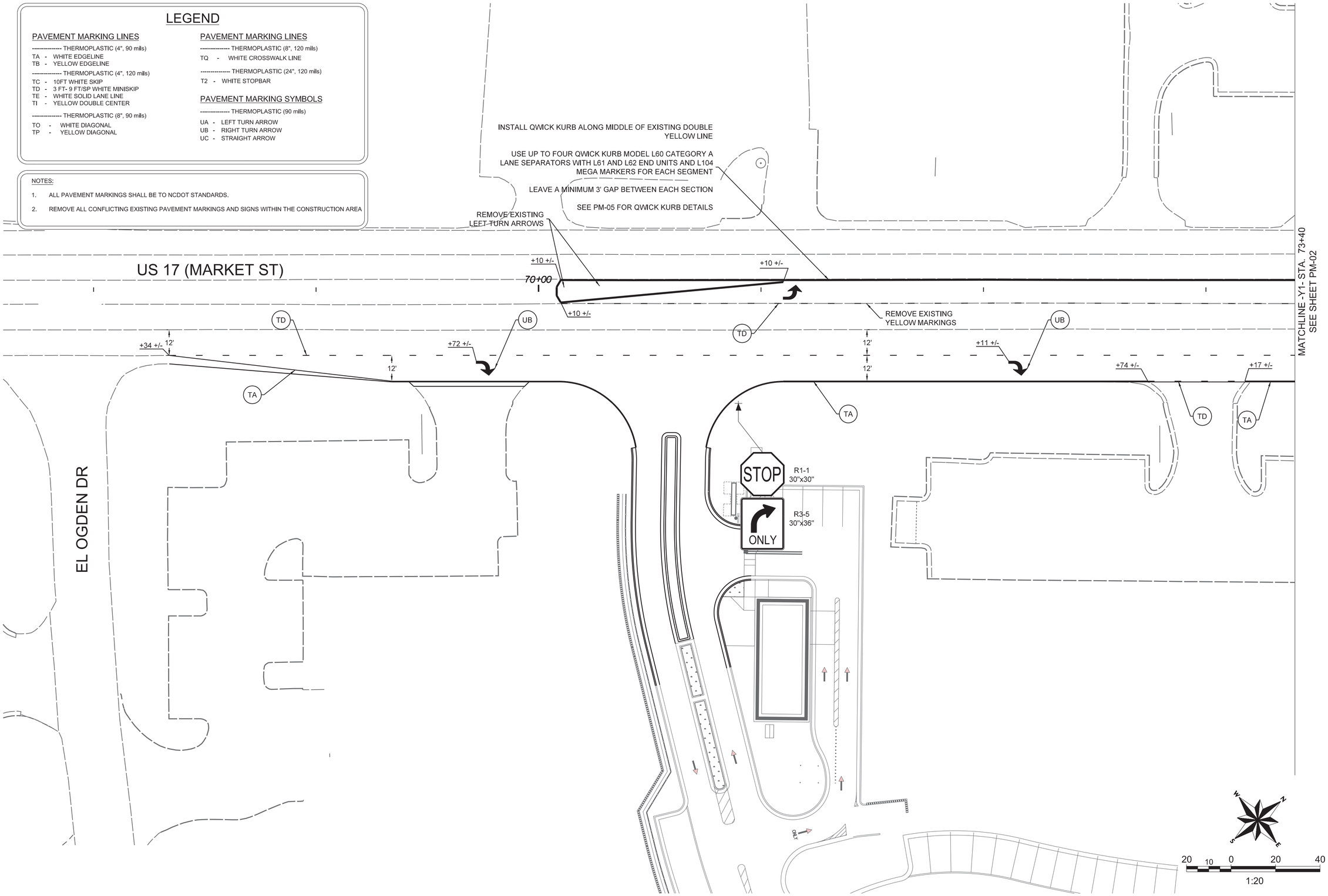

NORTH CAROLINA PROFESSIONAL ENGINEER SEAL 33333 JOHN G. TOWNSEND

FINAL

DAVENPORT
HOME OFFICE
305 WEST FOURTH STREET, SUITE 2A
WINSTON-SALEM, NC 27101
336.744.1636 www.davenportworld.com
NCBELS FIRM LICENSE NO. C-2522

PROJECT: 14-236
DATE: 07/2616
DESIGNED BY: JGT
DRAWN BY: JGT
CHECKED BY: DRC
SCALE: AS NOTED

REVISIONS

NO.	DATE	DESCRIPTION

CLIENT:
HALPERN DEVELOPMENT COMPANY, LLC
4799 NORTHSIDE DRIVE
ATLANTA, GA 30327
P: (404) 290-1975

PROJECT:
OGDEN MARKET PLACE
WILMINGTON, NC

TITLE:
PAVEMENT MARKING AND SIGNING PLAN SHEET

SHEET NO.
PM-01

THIS DOCUMENT, TOGETHER WITH THE CONCEPTS AND DESIGNS PRESENTED THEREIN, IS INTENDED ONLY FOR THE SPECIFIC PURPOSE AND CLIENT FOR WHICH IT WAS PREPARED. REUSE OF OR IMPROPER RELIANCE UPON THIS DOCUMENT BY OTHERS, WITHOUT WRITTEN AUTHORIZATION AND ADAPTATION BY DAVENPORT, SHALL BE WITHOUT LIABILITY TO DAVENPORT AND SHALL BE A VIOLATION OF THE AGREEMENT BETWEEN DAVENPORT AND ITS CLIENT.

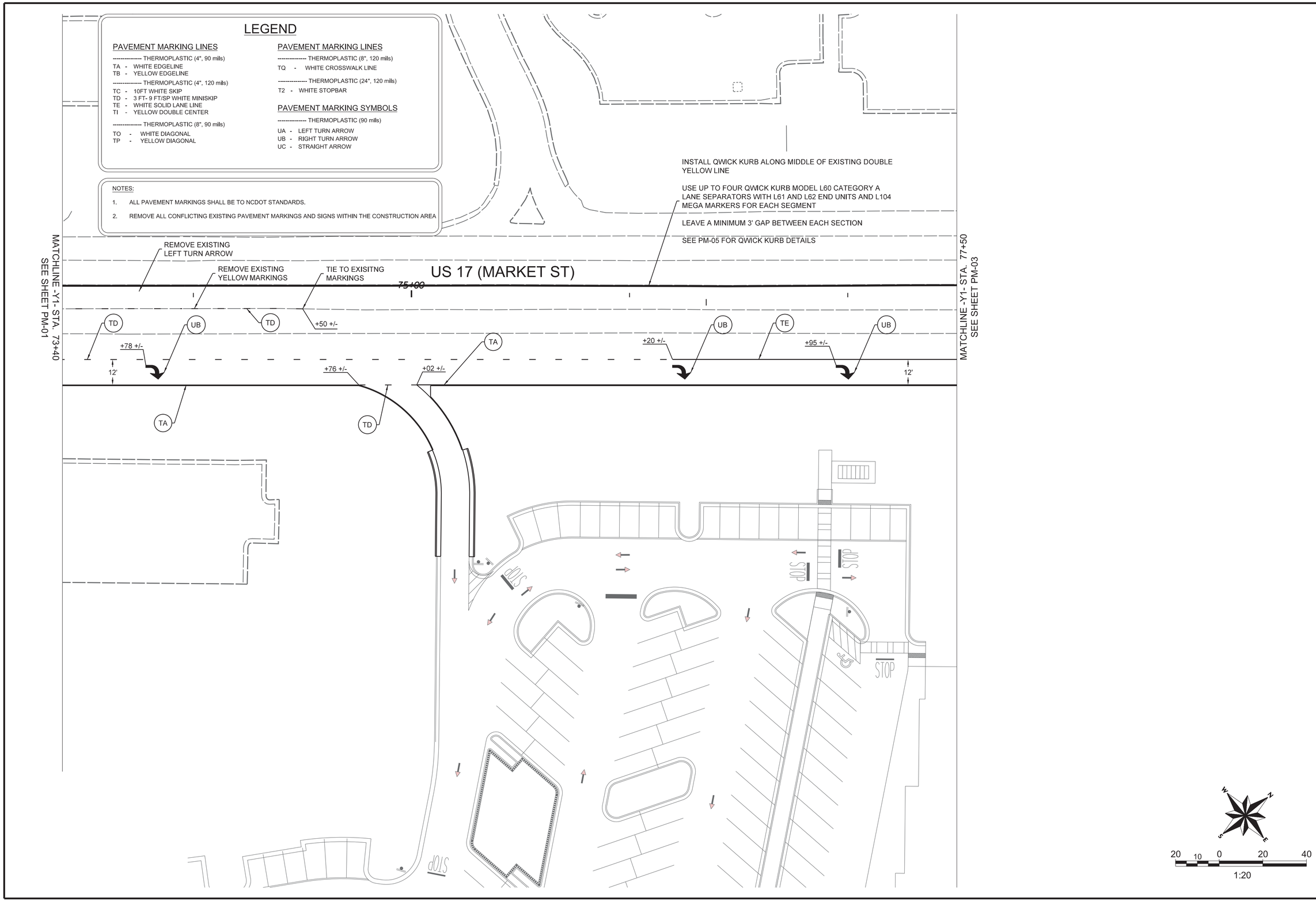

NORTH CAROLINA PROFESSIONAL SEAL 33533 ENGINEER JOHN G. TOWNSEND

FINAL

DAVENPORT
HOME OFFICE
305 WEST FOURTH STREET, SUITE 2A
WINSTON-SALEM, NC 27101
336.744.1636 www.davenportworld.com
NCBELS FIRM LICENSE NO. C-2522

PROJECT:	14-236
DATE:	07/2616
DESIGNED BY:	JGT
DRAWN BY:	JGT
CHECKED BY:	DRC
SCALE:	AS NOTED

REVISIONS

NO.	DATE	DESCRIPTION

CLIENT:
HALPERN DEVELOPMENT COMPANY, LLC
4799 NORTHSIDE DRIVE
ATLANTA, GA 30327
P: (404) 290-1975

PROJECT:
OGDEN MARKET PLACE
WILMINGTON, NC

TITLE:
PAVEMENT MARKING AND SIGNING PLAN SHEET

SHEET NO.
PM-02

THIS DOCUMENT, TOGETHER WITH THE CONCEPTS AND DESIGNS PRESENTED THEREIN, IS INTENDED ONLY FOR THE SPECIFIC PURPOSE AND CLIENT FOR WHICH IT WAS PREPARED. REUSE OF OR IMPROPER RELIANCE UPON THIS DOCUMENT BY OTHERS, WITHOUT WRITTEN AUTHORIZATION AND ADAPTATION BY DAVENPORT, SHALL BE WITHOUT LIABILITY TO DAVENPORT AND SHALL BE A VIOLATION OF THE AGREEMENT BETWEEN DAVENPORT AND ITS CLIENT.

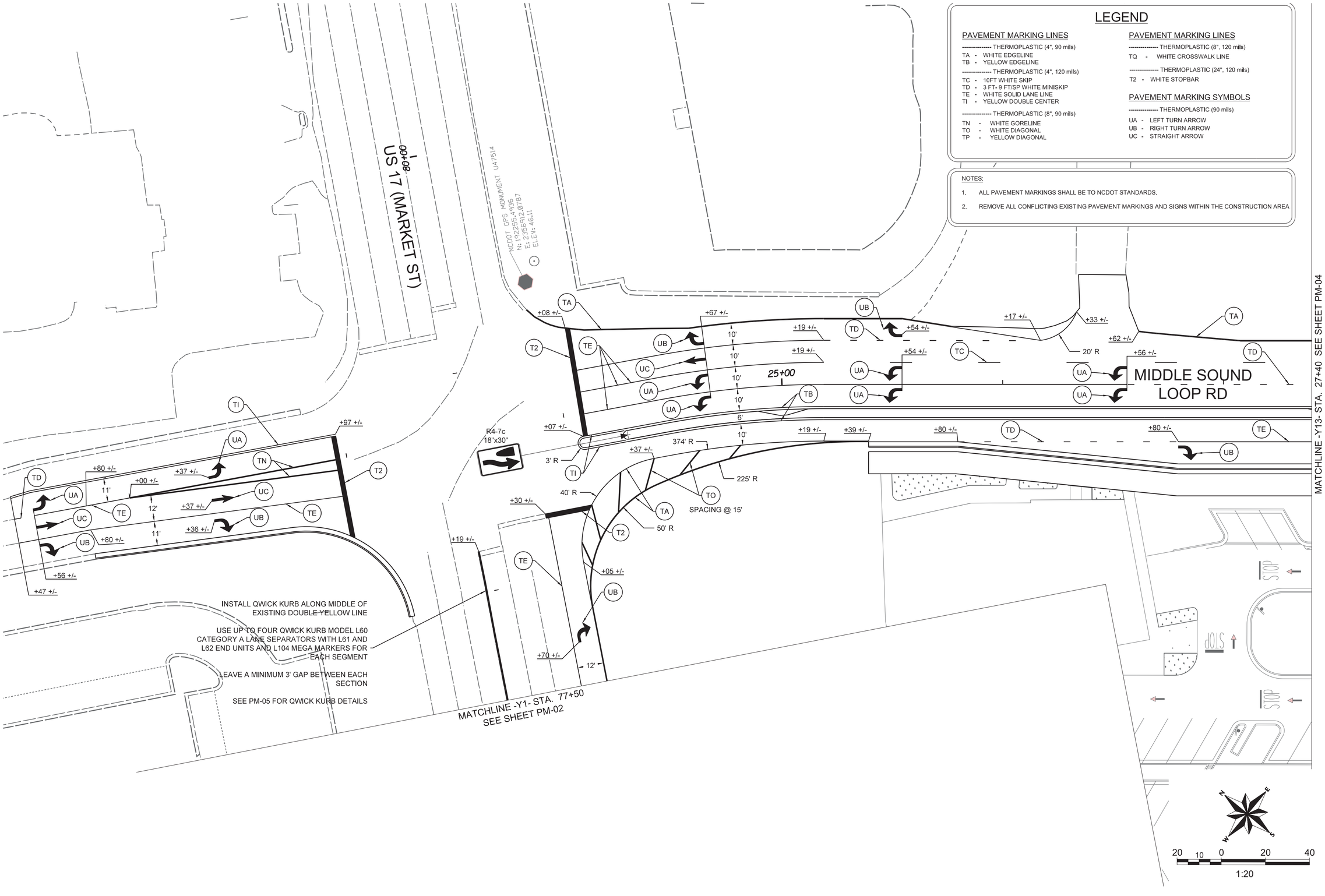

LEGEND

PAVEMENT MARKING LINES

---------- THERMOPLASTIC (4", 90 mils)
TA - WHITE EDGELINE
TB - YELLOW EDGELINE

---------- THERMOPLASTIC (4", 120 mils)
TC - 10FT WHITE SKIP
TD - 3 FT- 9 FT/SP WHITE MINISKIP
TE - WHITE SOLID LANE LINE
TI - YELLOW DOUBLE CENTER

---------- THERMOPLASTIC (8", 90 mils)
TN - WHITE GORELINE
TO - WHITE DIAGONAL
TP - YELLOW DIAGONAL

PAVEMENT MARKING LINES

---------- THERMOPLASTIC (8", 120 mils)
TQ - WHITE CROSSWALK LINE

---------- THERMOPLASTIC (24", 120 mils)
T2 - WHITE STOPBAR

PAVEMENT MARKING SYMBOLS

---------- THERMOPLASTIC (90 mils)
UA - LEFT TURN ARROW
UB - RIGHT TURN ARROW
UC - STRAIGHT ARROW

NOTES:

1. ALL PAVEMENT MARKINGS SHALL BE TO NCDOT STANDARDS.
2. REMOVE ALL CONFLICTING EXISTING PAVEMENT MARKINGS AND SIGNS WITHIN THE CONSTRUCTION AREA

NORTH CAROLINA PROFESSIONAL ENGINEER SEAL 31533 JOHN G. TOWNSEND

FINAL

DAVENPORT
HOME OFFICE
305 WEST FOURTH STREET, SUITE 2A
WINSTON-SALEM, NC 27101
336.744.1636 www.davenportworld.com
NCBELS FIRM LICENSE NO. C-2522

PROJECT: 14-236
DATE: 07/2616
DESIGNED BY: JGT
DRAWN BY: JGT
CHECKED BY: DRC
SCALE: AS NOTED

REVISIONS

NO.	DATE	DESCRIPTION

CLIENT:
HALPERN DEVELOPMENT COMPANY, LLC
4799 NORTHSIDE DRIVE
ATLANTA, GA 30327
P: (404) 290-1975

PROJECT:
OGDEN MARKET PLACE
WILMINGTON, NC

TITLE:
PAVEMENT MARKING AND SIGNING PLAN SHEET

SHEET NO.
PM-03

THIS DOCUMENT, TOGETHER WITH THE CONCEPTS AND DESIGNS PRESENTED THEREIN, IS INTENDED ONLY FOR THE SPECIFIC PURPOSE AND CLIENT FOR WHICH IT WAS PREPARED. REUSE OF OR IMPROPER RELIANCE UPON THIS DOCUMENT BY OTHERS, WITHOUT WRITTEN AUTHORIZATION AND ADAPTATION BY DAVENPORT, SHALL BE WITHOUT LIABILITY TO DAVENPORT AND SHALL BE A VIOLATION OF THE AGREEMENT BETWEEN DAVENPORT AND ITS CLIENT.

LEGEND

PAVEMENT MARKING LINES

---------- THERMOPLASTIC (4", 90 mils)
TA - WHITE EDGELINE
TB - YELLOW EDGELINE

---------- THERMOPLASTIC (4", 120 mils)
TC - 10FT WHITE SKIP
TD - 3 FT- 9 FT/SP WHITE MINISKIP
TE - WHITE SOLID LANE LINE
TI - YELLOW DOUBLE CENTER

---------- THERMOPLASTIC (8", 90 mils)
TO - WHITE DIAGONAL
TP - YELLOW DIAGONAL

PAVEMENT MARKING LINES

---------- THERMOPLASTIC (8", 120 mils)
TQ - WHITE CROSSWALK LINE

---------- THERMOPLASTIC (24", 120 mils)
T2 - WHITE STOPBAR

PAVEMENT MARKING SYMBOLS

---------- THERMOPLASTIC (90 mils)
UA - LEFT TURN ARROW
UB - RIGHT TURN ARROW
UC - STRAIGHT ARROW

NOTES:

1. ALL PAVEMENT MARKINGS SHALL BE TO NCDOT STANDARDS.
2. REMOVE ALL CONFLICTING EXISTING PAVEMENT MARKINGS AND SIGNS WITHIN THE CONSTRUCTION AREA

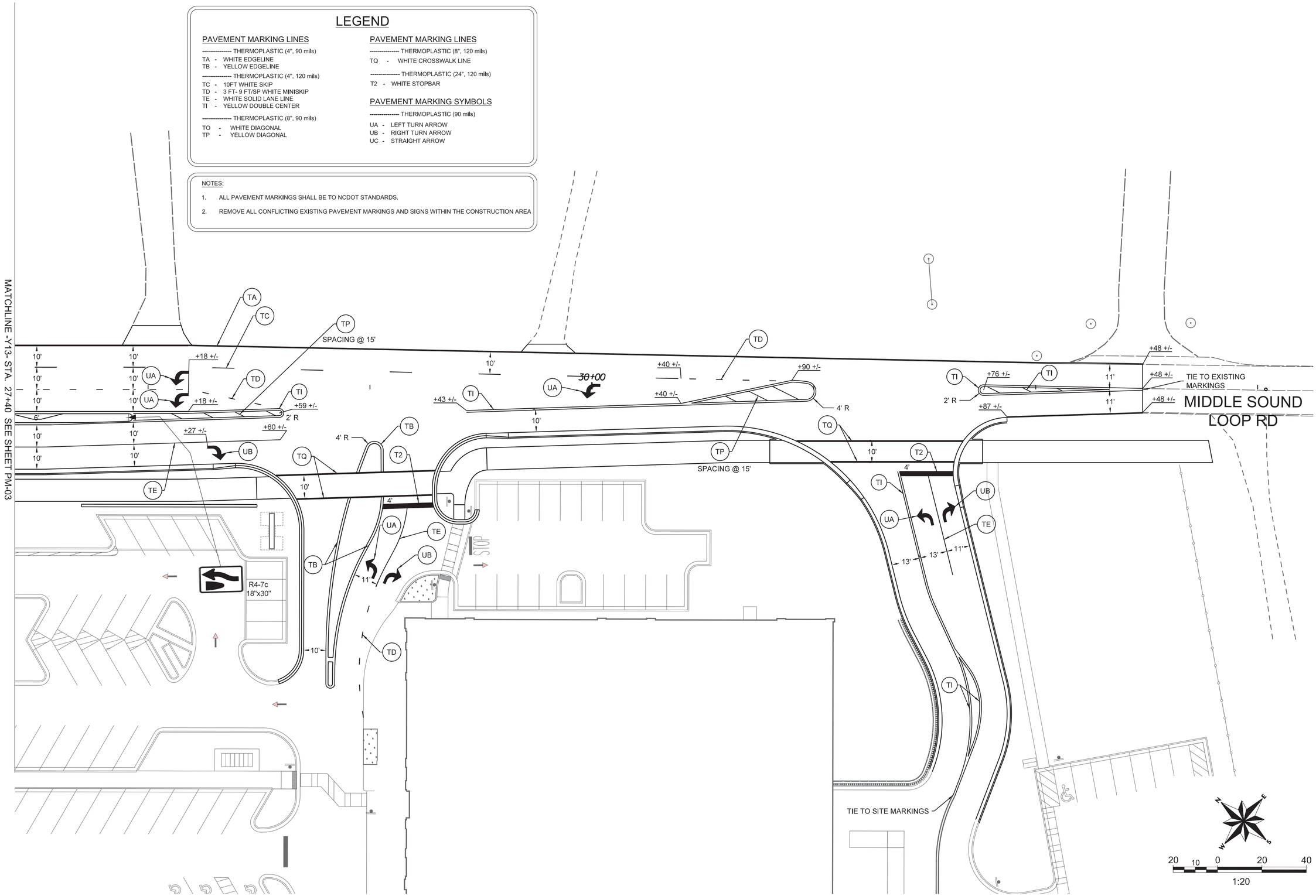

NORTH CAROLINA PROFESSIONAL ENGINEER SEAL 16333 JOHN G. TOWNSEND

FINAL

DAVENPORT
HOME OFFICE
305 WEST FOURTH STREET, SUITE 2A
WINSTON-SALEM, NC 27101
336.744.1636 www.davenportworld.com
NCBELS FIRM LICENSE NO. C-2522

PROJECT: 14-236
DATE: 07/26/16
DESIGNED BY: JGT
DRAWN BY: JGT
CHECKED BY: DRC
SCALE: AS NOTED

REVISIONS

NO.	DATE	DESCRIPTION

CLIENT: HALPERN DEVELOPMENT COMPANY, LLC
4799 NORTHSIDE DRIVE
ATLANTA, GA 30327
P: (404) 290-1975

PROJECT: OGDEN MARKET PLACE
WILMINGTON, NC

TITLE: PAVEMENT MARKING AND SIGNING PLAN SHEET

SHEET NO. PM-04

THIS DOCUMENT, TOGETHER WITH THE CONCEPTS AND DESIGNS PRESENTED THEREIN, IS INTENDED ONLY FOR THE SPECIFIC PURPOSE AND CLIENT FOR WHICH IT WAS PREPARED. REUSE OF OR IMPROPER RELIANCE UPON THIS DOCUMENT BY OTHERS, WITHOUT WRITTEN AUTHORIZATION AND ADAPTATION BY DAVENPORT, SHALL BE WITHOUT LIABILITY TO DAVENPORT AND SHALL BE A VIOLATION OF THE AGREEMENT BETWEEN DAVENPORT AND ITS CLIENT.

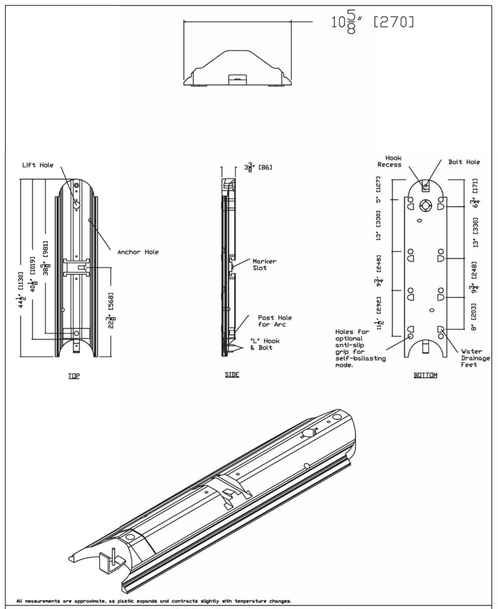

All measurements are approximate, as plastic expands and contracts slightly with temperature changes.

QWICK KURB® L60 Cat. A Lane Separator

SHEET NO.	DATE:
1 of 2	08/20/09

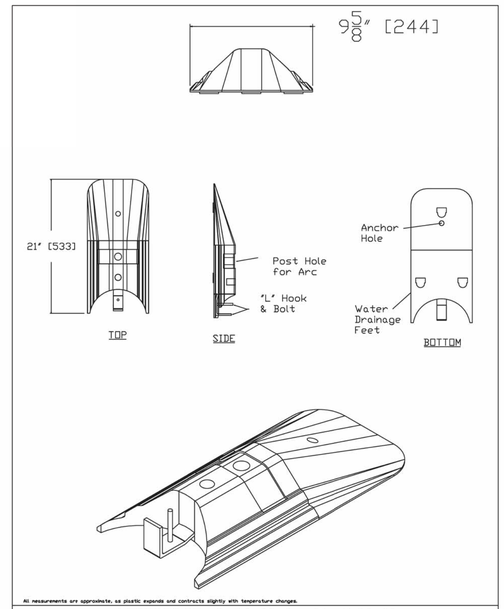

All measurements are approximate, as plastic expands and contracts slightly with temperature changes.

QWICK KURB® L61 Male End Unit

SHEET NO.	DATE:
1 of 2	08/28/09

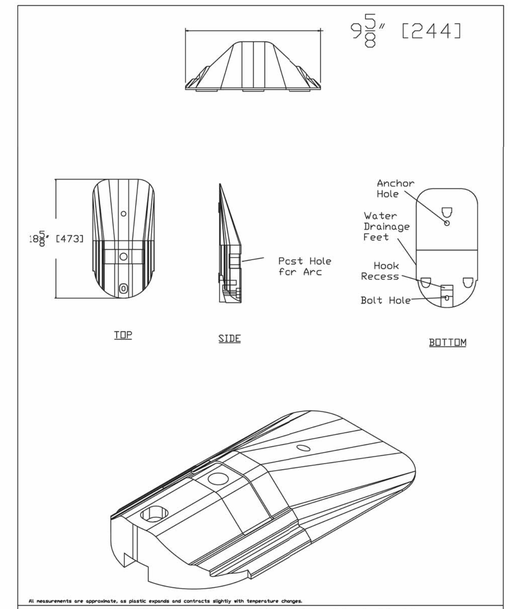

All measurements are approximate, as plastic expands and contracts slightly with temperature changes.

QWICK KURB® L62 Female End Unit

SHEET NO.	DATE:
1 of 2	08/28/09

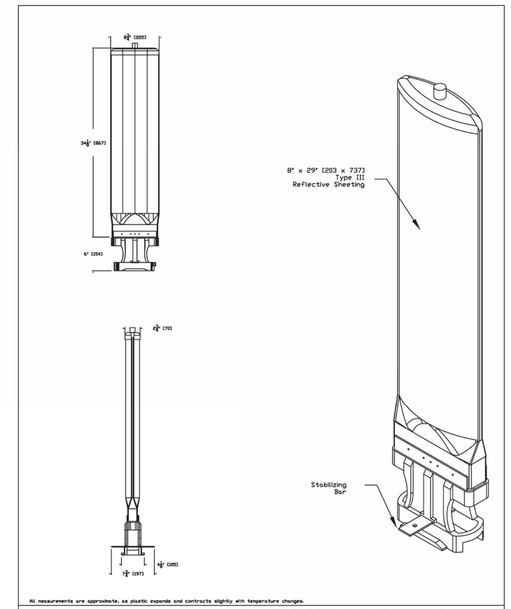

All measurements are approximate, as plastic expands and contracts slightly with temperature changes.

QWICK KURB® Model L104 MEGA MARKER™

SHEET NO.	DATE:
1 of 2	10/05/09

INTENDED USE

The **QWICK KURB®** Category A Lane Separator is a longitudinal channelizer system of interlocking raised units, profile depicting retro-reflective arcs and reboundable vertical markers/bollards. The system is used instead of asphalt or concrete separators where a more forgiving separator is desired, or in lieu of mere delineators where more robust separation is needed. It provides superior guidance for motorists both day and night. It is ideal as a lane separator, as an edge guide, as a channelizer to ease traffic away from attenuators and restricted areas, and to channel in other desirable ways.

COMPONENTS

The L60 Lane Separator unit is composed of recycled polyethylene, containing three PVC inserts and a stainless steel L-shaped connecting hook. The unit weighs approximately 36lbs [16 kg].

Each unit uses a 3/8" x 2 3/4"[10x70] bolt with washer and lock nut to connect adjoining units.

Optional accessories include reboundable vertical markers/bollards/signs and retro-reflective arcs to improve visibility.

APPROVALS & ACCEPTANCE

FHWA: WZ-109 http://safety.fhwa.dot.gov/roadway_dept/policy_guide/road_hardware/workzone/pdf/wz109.pdf
NCHRP 350
3,500PSI 90% Crush Standard
Category A Standard

CONTACT INFORMATION

QWICK KURB®, INC.
1916 US 41 South
Ruskin, FL 33570
Phone (813) 645-5072
Fax (813) 645-4856
www.qwickkurb.com

QWICK KURB® Model L60 Category A Lane Separator

SHEET NO.	DATE
2 of 2	08/20/2009

QWICK KURB®, INC.

INTENDED USE

The **QWICK KURB®** L61 Male End Unit connects to the adjoining L60 Separator at the beginning of each run of separators to create a gentle sloping face to tires of oncoming traffic.

CONTACT INFORMATION

QWICK KURB®, INC.
1916 US 41 South
Ruskin, FL 33570
Phone (813) 645-5072
Fax (813) 645-4856
www.qwickkurb.com

QWICK KURB® Model L61 Male End Unit

SHEET NO.	DATE
2 of 2	08/28/2009

QWICK KURB®, INC.

INTENDED USE

The **QWICK KURB®** L62 Female End Unit connects to the adjoining L60 Separator at the end of each run of separators to create a gentle sloping face to tires of oncoming traffic.

CONTACT INFORMATION

QWICK KURB®, INC.
1916 US 41 South
Ruskin, FL 33570
Phone (813) 645-5072
Fax (813) 645-4856
www.qwickkurb.com

QWICK KURB® Model L62 Female End Unit

SHEET NO.	DATE
2 of 2	08/28/2009

QWICK KURB®, INC.

INTENDED USE

The **QWICK KURB®** Model L104 MEGA MARKER™ is a large marker designed to be clearly visible in order to demarcate vehicular lanes as a longitudinal channelizer. The L104 attaches directly to the L60 Category A Lane Separator, the L50 Stand Alone Base Unit and other **QWICK KURB®, INC.** mounting devices.

CONTACT INFORMATION

QWICK KURB®, INC.
1916 US 41 South
Ruskin, FL 33570
Phone (813) 645-5072
Fax (813) 645-4856
www.qwickkurb.com

QWICK KURB® Model L104 MEGA MARKER™

SHEET NO.	DATE
2 of 2	10/05/2009

QWICK KURB®, INC.

NORTH CAROLINA PROFESSIONAL SEAL SEPTEMBER 2009 ENGINEER JOHN G. TOMINSENO

FINAL

DAVENPORT
HOME OFFICE
305 WEST FOURTH STREET, SUITE 2A
WINSTON-SALEM, NC 27101
336.744.1936 www.davenportworld.com
NCBELS FIRM LICENSE NO. C-2522

PROJECT:	14-236
DATE:	07/2616
DESIGNED BY:	JGT
DRAWN BY:	JGT
CHECKED BY:	DRC
SCALE:	AS NOTED

REVISIONS

NO.	DATE	DESCRIPTION

CLIENT: HALPERN DEVELOPMENT COMPANY, LLC
4799 NORTHSIDE DRIVE
ATLANTA, GA 30327
P: (404) 290-1975

PROJECT: OGDEN MARKET PLACE
WILMINGTON, NC

TITLE: PAVEMENT MARKING AND SIGNING PLAN SHEET

SHEET NO.
PM-05

THIS DOCUMENT, TOGETHER WITH THE CONCEPTS AND DESIGNS PRESENTED THEREIN, IS INTENDED ONLY FOR THE SPECIFIC PURPOSE AND CLIENT FOR WHICH IT WAS PREPARED. REUSE OF OR IMPROPER RELIANCE UPON THIS DOCUMENT BY OTHERS, WITHOUT WRITTEN AUTHORIZATION AND ADAPTATION BY DAVENPORT, SHALL BE WITHOUT LIABILITY TO DAVENPORT AND SHALL BE A VIOLATION OF THE AGREEMENT BETWEEN DAVENPORT AND ITS CLIENT.

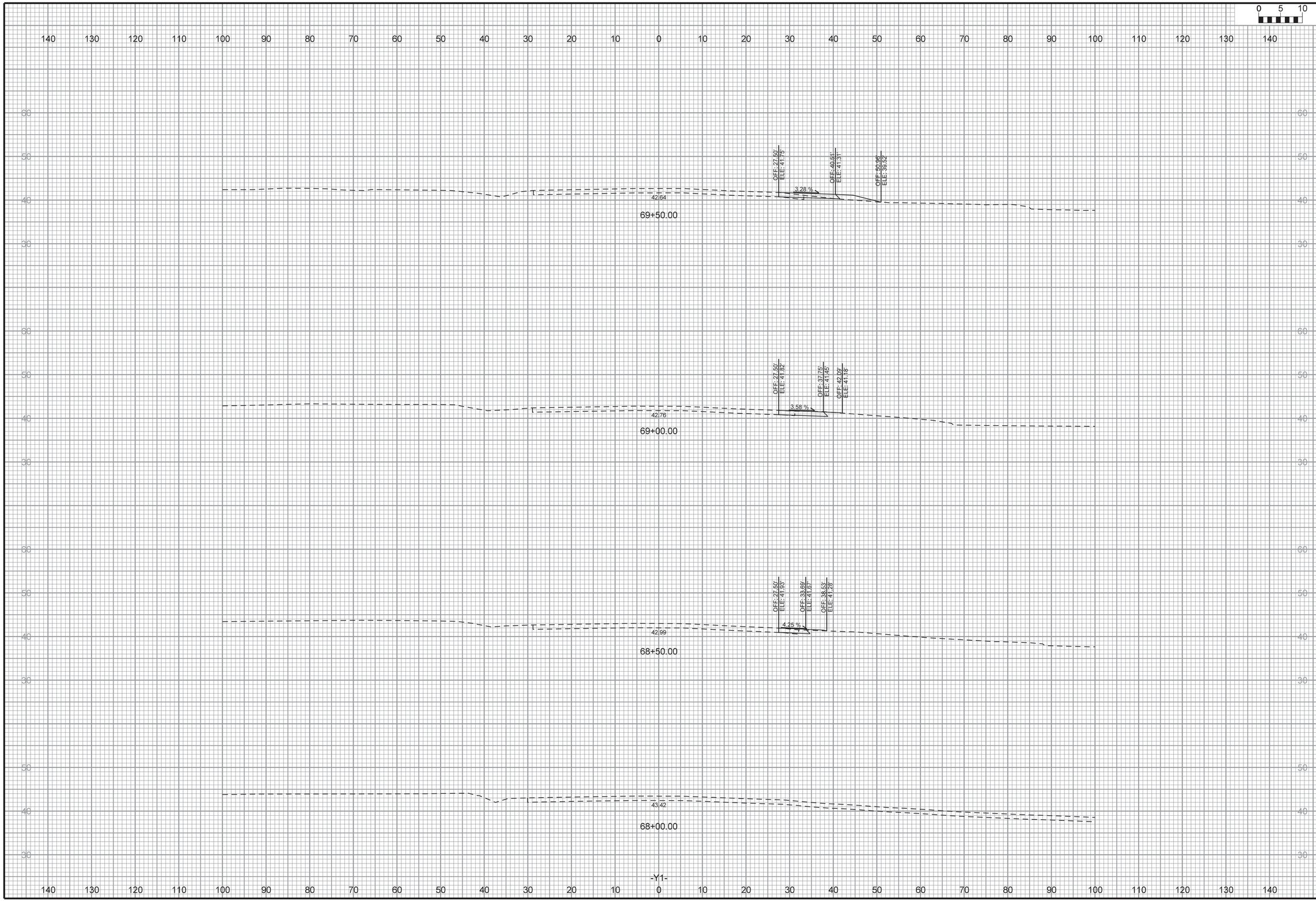

NORTH CAROLINA PROFESSIONAL ENGINEER SEAL 31533 JOHN G. TOWNSEND

FINAL

DAVENPORT
HOME OFFICE
305 WEST FOURTH STREET, SUITE 2A
WINSTON-SALEM, NC 27101
336.744.1636 www.davenportworld.com
NCBELS FIRM LICENSE NO. C-2522

PROJECT: 14-236
DATE: 07/2616
DESIGNED BY: JGT
DRAWN BY: JGT
CHECKED BY: DRC
SCALE: AS NOTED

REVISIONS

NO.	DATE	DESCRIPTION

CLIENT:
HALPERN DEVELOPMENT COMPANY, LLC
4799 NORTHSIDE DRIVE
ATLANTA, GA 30327
P: (404) 290-1975

PROJECT:
OGDEN MARKET PLACE
WILMINGTON, NC

TITLE:
CROSS SECTION

SHEET NO.
XS-01

THIS DOCUMENT, TOGETHER WITH THE CONCEPTS AND DESIGNS PRESENTED THEREIN, IS INTENDED ONLY FOR THE SPECIFIC PURPOSE AND CLIENT FOR WHICH IT WAS PREPARED. REUSE OF OR IMPROPER RELIANCE UPON THIS DOCUMENT BY OTHERS, WITHOUT WRITTEN AUTHORIZATION AND ADAPTATION BY DAVENPORT, SHALL BE WITHOUT LIABILITY TO DAVENPORT AND SHALL BE A VIOLATION OF THE AGREEMENT BETWEEN DAVENPORT AND ITS CLIENT.

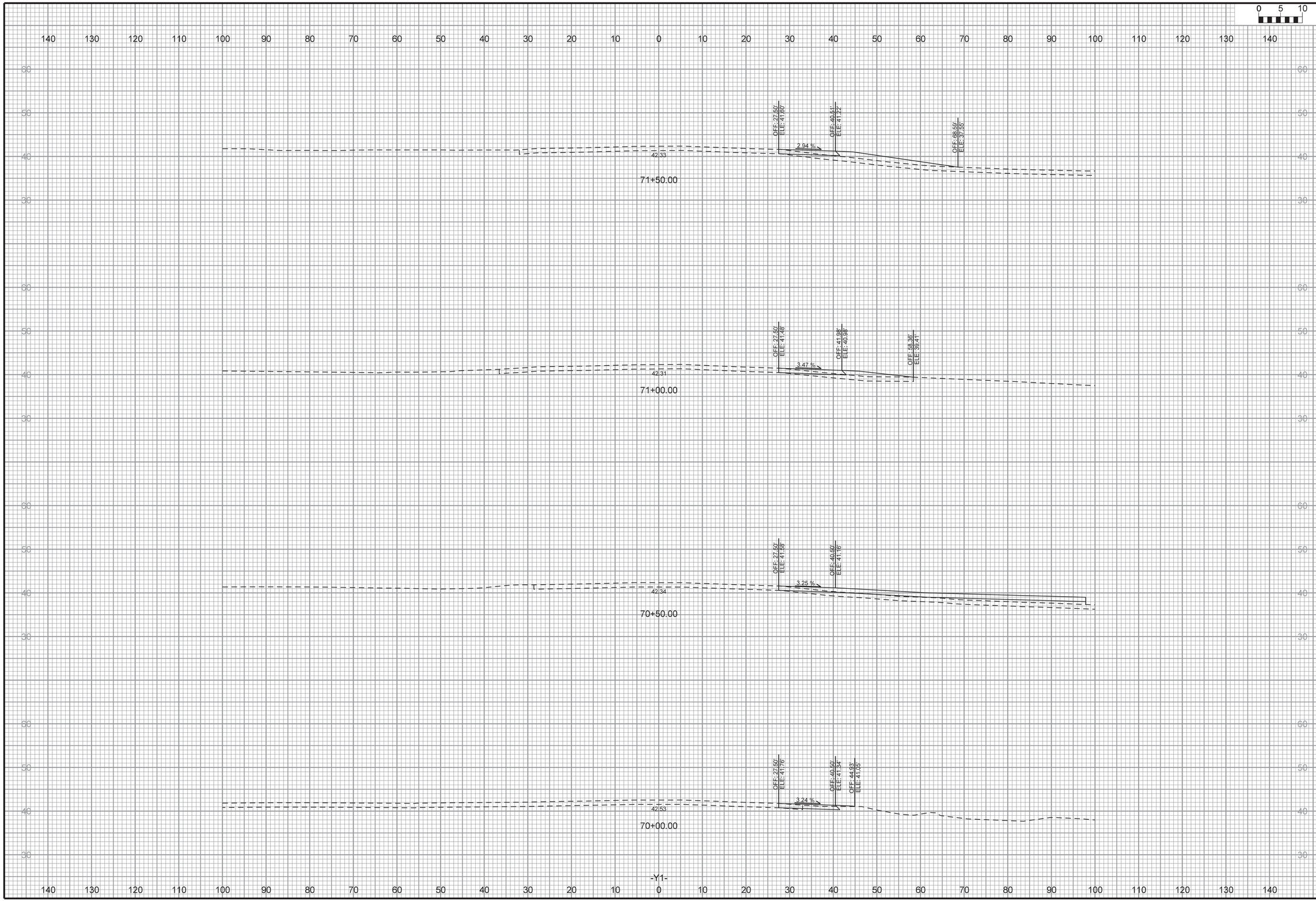

NORTH CAROLINA PROFESSIONAL SEAL 053 ENGINEER JOHN G. TOMASINO

FINAL

DAVENPORT
HOME OFFICE
305 WEST FOURTH STREET, SUITE 2A
WINSTON-SALEM, NC 27101
336.744.1836 www.davenportworld.com
NCBELS FIRM LICENSE NO. C-2322

PROJECT: 14-236
DATE: 07/26/16
DESIGNED BY: JGT
DRAWN BY: JGT
CHECKED BY: DRC
SCALE: AS NOTED

NO.	DATE	REVISIONS DESCRIPTION

CLIENT: HALPERN DEVELOPMENT COMPANY, LLC
4799 NORTHSIDE DRIVE
ATLANTA, GA 30327
P: (404) 290-1975

PROJECT: OGDEN MARKET PLACE
WILMINGTON, NC

TITLE: CROSS SECTION

SHEET NO.
XS-02

THIS DOCUMENT, TOGETHER WITH THE CONCEPTS AND DESIGNS PRESENTED THEREIN, IS INTENDED ONLY FOR THE SPECIFIC PURPOSE AND CLIENT FOR WHICH IT WAS PREPARED. REUSE OF OR IMPROPER RELIANCE UPON THIS DOCUMENT BY OTHERS, WITHOUT WRITTEN AUTHORIZATION AND ADAPTATION BY DAVENPORT, SHALL BE WITHOUT LIABILITY TO DAVENPORT AND SHALL BE A VIOLATION OF THE AGREEMENT BETWEEN DAVENPORT AND ITS CLIENT.

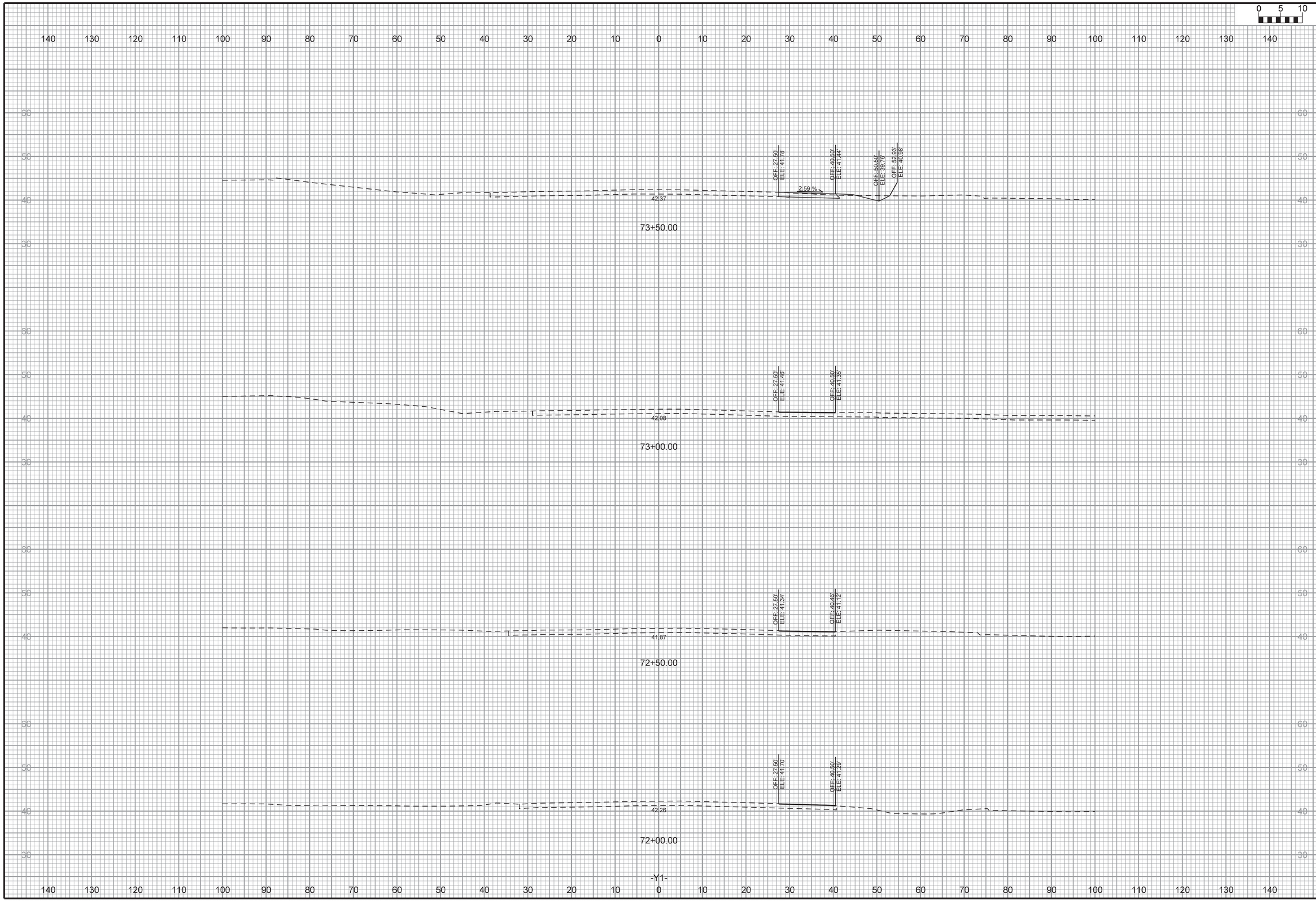

NORTH CAROLINA PROFESSIONAL SEAL 31533 ENGINEER JOHN G. TOWNSEND

FINAL

DAVENPORT
HOME OFFICE
305 WEST FOURTH STREET, SUITE 2A
WINSTON-SALEM, NC 27101
336.744.1636 www.davenportworld.com
NCBELS FIRM LICENSE NO. C-2522

PROJECT: 14-236
DATE: 07/2616
DESIGNED BY: JGT
DRAWN BY: JGT
CHECKED BY: DRC
SCALE: AS NOTED

NO.	DATE	REVISIONS DESCRIPTION

CLIENT:
HALPERN DEVELOPMENT COMPANY, LLC
4799 NORTHSIDE DRIVE
ATLANTA, GA 30327
P: (404) 290-1975

PROJECT:
OGDEN MARKET PLACE
WILMINGTON, NC

TITLE:
CROSS SECTION

SHEET NO.
XS-03

THIS DOCUMENT, TOGETHER WITH THE CONCEPTS AND DESIGNS PRESENTED THEREIN, IS INTENDED ONLY FOR THE SPECIFIC PURPOSE AND CLIENT FOR WHICH IT WAS PREPARED. REUSE OF OR IMPROPER RELIANCE UPON THIS DOCUMENT BY OTHERS, WITHOUT WRITTEN AUTHORIZATION AND ADAPTATION BY DAVENPORT, SHALL BE WITHOUT LIABILITY TO DAVENPORT AND SHALL BE A VIOLATION OF THE AGREEMENT BETWEEN DAVENPORT AND ITS CLIENT.

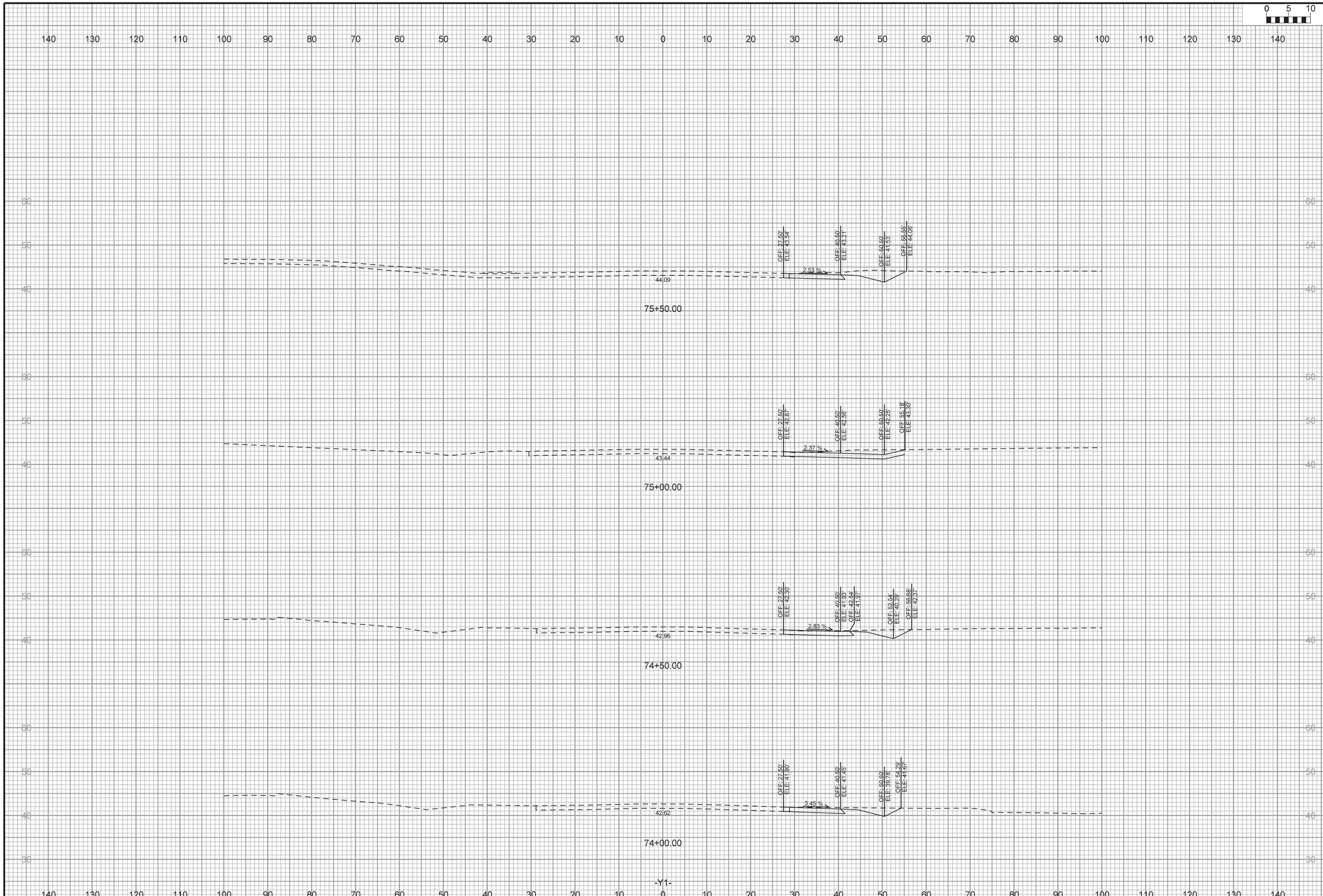

NORTH CAROLINA PROFESSIONAL SEAL 31533 ENGINEER JOHN G. TOWNSEND

FINAL

DAVENPORT
HOME OFFICE
305 WEST FOURTH STREET, SUITE 2A
WINSTON-SALEM, NC 27101
336.744.1636 www.davenportworld.com
NCBELS FIRM LICENSE NO. C-2522

PROJECT:	14-236
DATE:	07/2616
DESIGNED BY:	JGT
DRAWN BY:	JGT
CHECKED BY:	DRC
SCALE:	AS NOTED

REVISIONS

NO.	DATE	DESCRIPTION

CLIENT:
HALPERN DEVELOPMENT COMPANY, LLC
4799 NORTHSIDE DRIVE
ATLANTA, GA 30327
P: (404) 290-1975

PROJECT:
OGDEN MARKET PLACE
WILMINGTON, NC

TITLE:
CROSS SECTION

SHEET NO.
XS-04

THIS DOCUMENT, TOGETHER WITH THE CONCEPTS AND DESIGNS PRESENTED THEREIN, IS INTENDED ONLY FOR THE SPECIFIC PURPOSE AND CLIENT FOR WHICH IT WAS PREPARED. REUSE OF OR IMPROPER RELIANCE UPON THIS DOCUMENT BY OTHERS, WITHOUT WRITTEN AUTHORIZATION AND ADAPTATION BY DAVENPORT, SHALL BE WITHOUT LIABILITY TO DAVENPORT AND SHALL BE A VIOLATION OF THE AGREEMENT BETWEEN DAVENPORT AND ITS CLIENT.

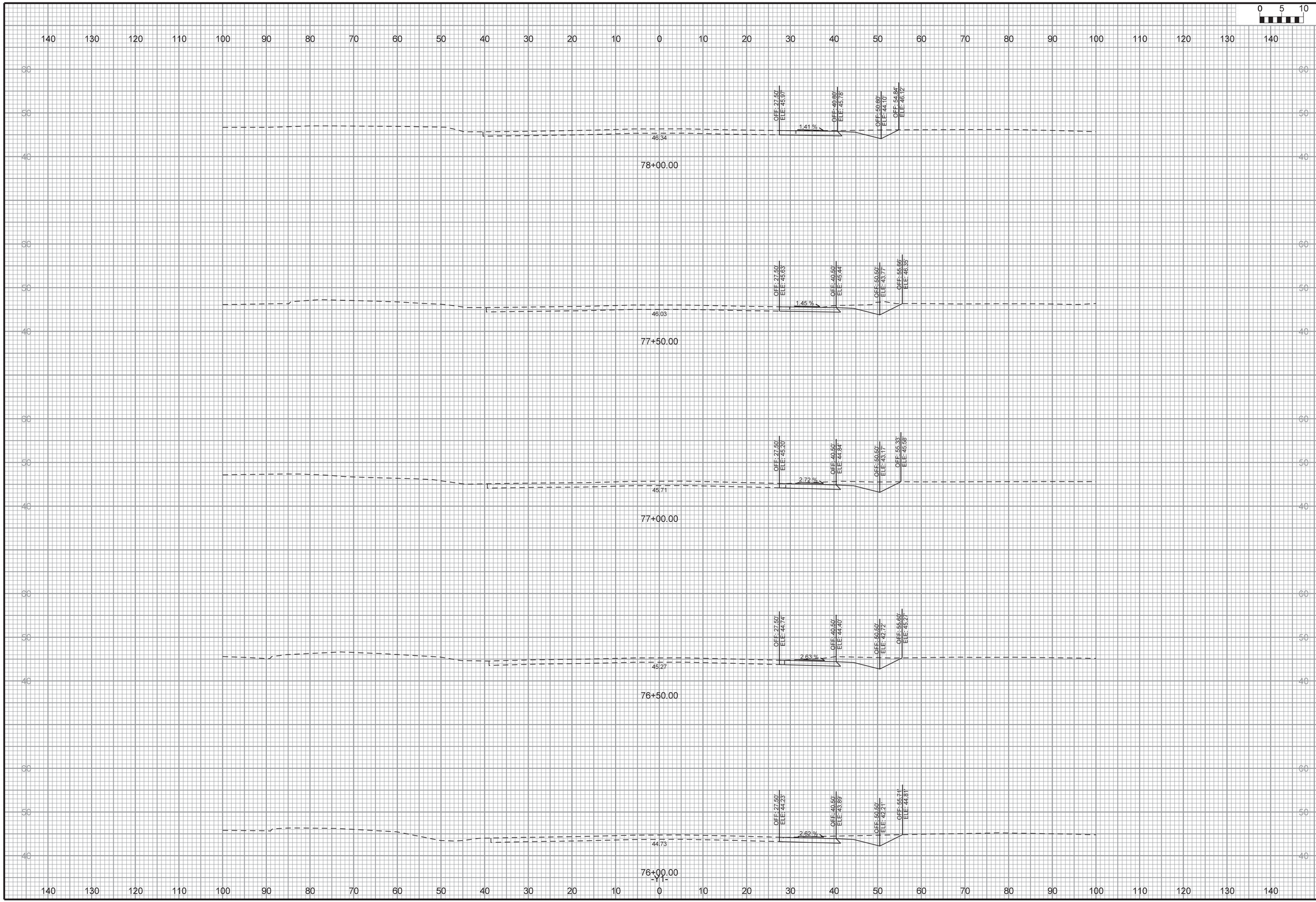

NORTH CAROLINA PROFESSIONAL ENGINEER SEAL 31533 JOHN G. TOWNSEND

FINAL

DAVENPORT
HOME OFFICE
305 WEST FOURTH STREET, SUITE 2A
WINSTON-SALEM, NC 27101
336.744.1636 www.davenportworld.com
NCBELS FIRM LICENSE NO. C-2522

PROJECT: 14-236
DATE: 07/2616
DESIGNED BY: JGT
DRAWN BY: JGT
CHECKED BY: DRC
SCALE: AS NOTED

NO.	DATE	REVISIONS DESCRIPTION

CLIENT:
HALPERN DEVELOPMENT COMPANY, LLC
4799 NORTHSIDE DRIVE
ATLANTA, GA 30327
P: (404) 290-1975

PROJECT:
OGDEN MARKET PLACE
WILMINGTON, NC

TITLE:
CROSS SECTION

SHEET NO.
XS-05

THIS DOCUMENT, TOGETHER WITH THE CONCEPTS AND DESIGNS PRESENTED THEREIN, IS INTENDED ONLY FOR THE SPECIFIC PURPOSE AND CLIENT FOR WHICH IT WAS PREPARED. REUSE OF OR IMPROPER RELIANCE UPON THIS DOCUMENT BY OTHERS, WITHOUT WRITTEN AUTHORIZATION AND ADAPTATION BY DAVENPORT, SHALL BE WITHOUT LIABILITY TO DAVENPORT AND SHALL BE A VIOLATION OF THE AGREEMENT BETWEEN DAVENPORT AND ITS CLIENT.

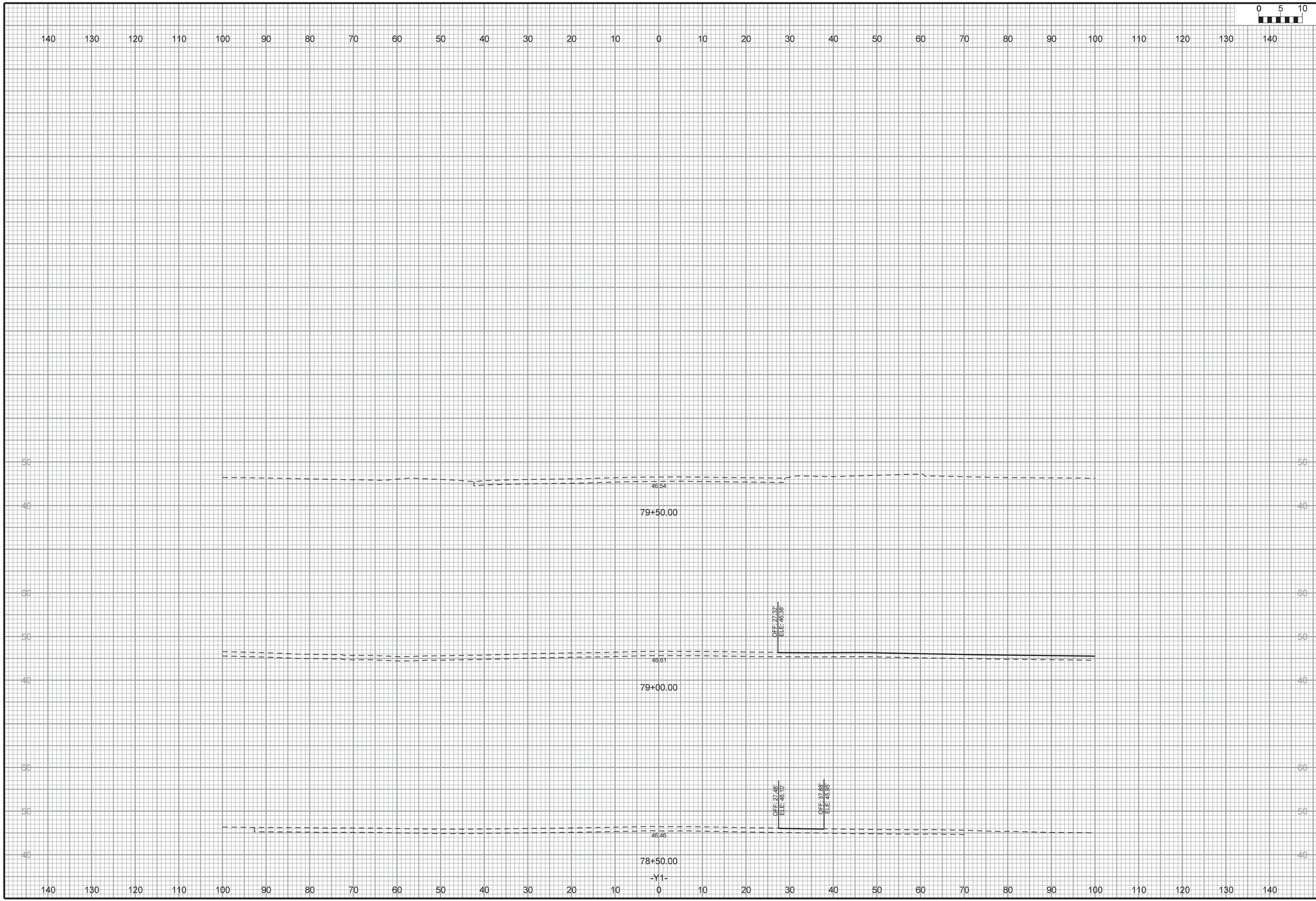

NORTH CAROLINA PROFESSIONAL ENGINEER SEAL 31533 JOHN G. TOWNSEND

FINAL

DAVENPORT
HOME OFFICE
305 WEST FOURTH STREET, SUITE 2A
WINSTON-SALEM, NC 27101
336.744.1636 www.davenportworld.com
NCBELS FIRM LICENSE NO. C-2522

PROJECT:	14-236
DATE:	07/2616
DESIGNED BY:	JGT
DRAWN BY:	JGT
CHECKED BY:	DRC
SCALE:	AS NOTED

REVISIONS

NO.	DATE	DESCRIPTION

CLIENT:
HALPERN DEVELOPMENT COMPANY, LLC
4799 NORTHSIDE DRIVE
ATLANTA, GA 30327
P: (404) 290-1975

PROJECT:
OGDEN MARKET PLACE
WILMINGTON, NC

TITLE:
CROSS SECTION

SHEET NO.
XS-06

THIS DOCUMENT, TOGETHER WITH THE CONCEPTS AND DESIGNS PRESENTED THEREIN, IS INTENDED ONLY FOR THE SPECIFIC PURPOSE AND CLIENT FOR WHICH IT WAS PREPARED. REUSE OF OR IMPROPER RELIANCE UPON THIS DOCUMENT BY OTHERS, WITHOUT WRITTEN AUTHORIZATION AND ADAPTATION BY DAVENPORT, SHALL BE WITHOUT LIABILITY TO DAVENPORT AND SHALL BE A VIOLATION OF THE AGREEMENT BETWEEN DAVENPORT AND ITS CLIENT.

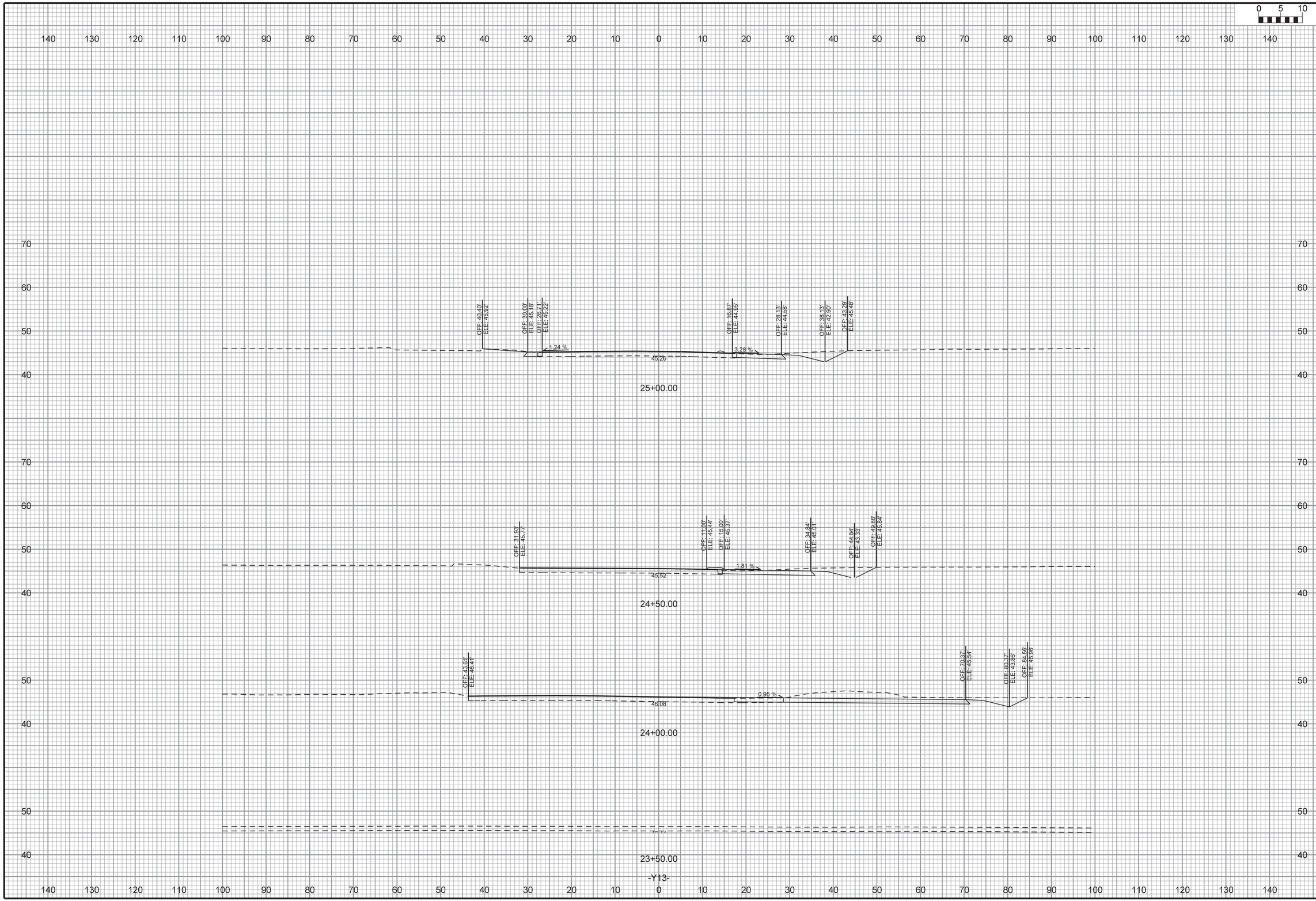

NORTH CAROLINA PROFESSIONAL SEAL 045033 ENGINEER JOHN G. TOMICSKO

FINAL

DAVENPORT
HOME OFFICE
305 WEST FOURTH STREET, SUITE 2A
WINSTON-SALEM, NC 27101
336.744.1836 www.davenportworld.com
NCBELS FIRM LICENSE NO. C-2322

PROJECT: 14-236
DATE: 07/28/16
DESIGNED BY: JGT
DRAWN BY: JGT
CHECKED BY: DRC
SCALE: AS NOTED

NO.	DATE	REVISIONS DESCRIPTION

CLIENT:
HALPERN DEVELOPMENT COMPANY, LLC
4799 NORTHSIDE DRIVE
ATLANTA, GA 30327
P: (404) 290-1975

PROJECT:
OGDEN MARKET PLACE
WILMINGTON, NC

TITLE:
CROSS SECTION

SHEET NO.
XS-07

THIS DOCUMENT, TOGETHER WITH THE CONCEPTS AND DESIGNS PRESENTED THEREIN, IS INTENDED ONLY FOR THE SPECIFIC PURPOSE AND CLIENT FOR WHICH IT WAS PREPARED. REUSE OF OR IMPROPER RELIANCE UPON THIS DOCUMENT BY OTHERS, WITHOUT WRITTEN AUTHORIZATION AND ADAPTATION BY DAVENPORT, SHALL BE WITHOUT LIABILITY TO DAVENPORT AND SHALL BE A VIOLATION OF THE AGREEMENT BETWEEN DAVENPORT AND ITS CLIENT.

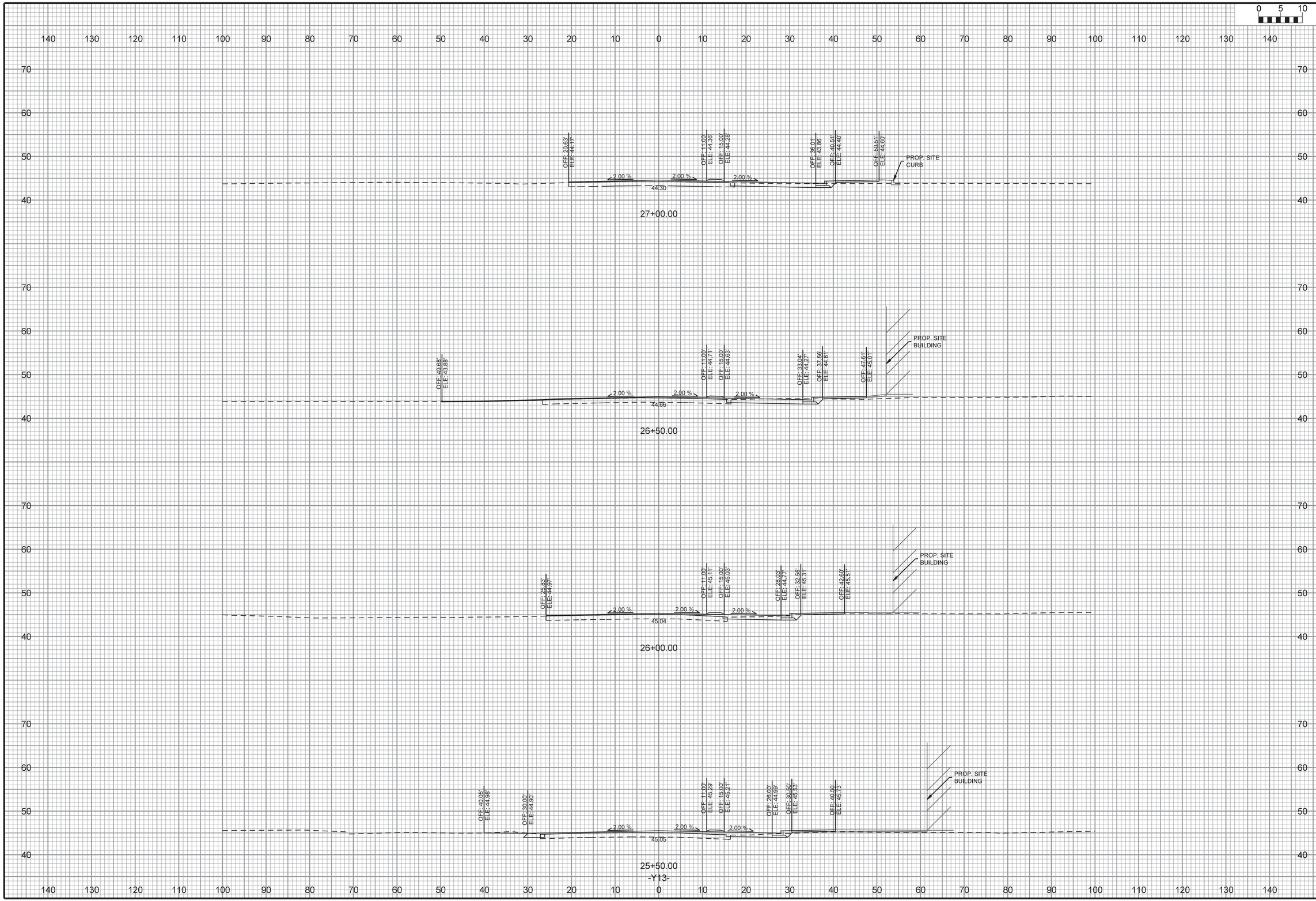

NORTH CAROLINA PROFESSIONAL ENGINEER SEAL 31533 JOHN G. TOWNSEND

FINAL

DAVENPORT
HOME OFFICE
305 WEST FOURTH STREET, SUITE 2A
WINSTON-SALEM, NC 27101
336.744.1636 www.davenportworld.com
NCBELS FIRM LICENSE NO. C-2522

PROJECT: 14-236
DATE: 07/2616
DESIGNED BY: JGT
DRAWN BY: JGT
CHECKED BY: DRC
SCALE: AS NOTED

NO.	DATE	REVISIONS DESCRIPTION

CLIENT:
HALPERN DEVELOPMENT COMPANY, LLC
4799 NORTHSIDE DRIVE
ATLANTA, GA 30327
P: (404) 290-1975

PROJECT:
OGDEN MARKET PLACE
WILMINGTON, NC

TITLE:
CROSS SECTION

SHEET NO.
XS-08

THIS DOCUMENT, TOGETHER WITH THE CONCEPTS AND DESIGNS PRESENTED THEREIN, IS INTENDED ONLY FOR THE SPECIFIC PURPOSE AND CLIENT FOR WHICH IT WAS PREPARED. REUSE OF OR IMPROPER RELIANCE UPON THIS DOCUMENT BY OTHERS, WITHOUT WRITTEN AUTHORIZATION AND ADAPTATION BY DAVENPORT, SHALL BE WITHOUT LIABILITY TO DAVENPORT AND SHALL BE A VIOLATION OF THE AGREEMENT BETWEEN DAVENPORT AND ITS CLIENT.

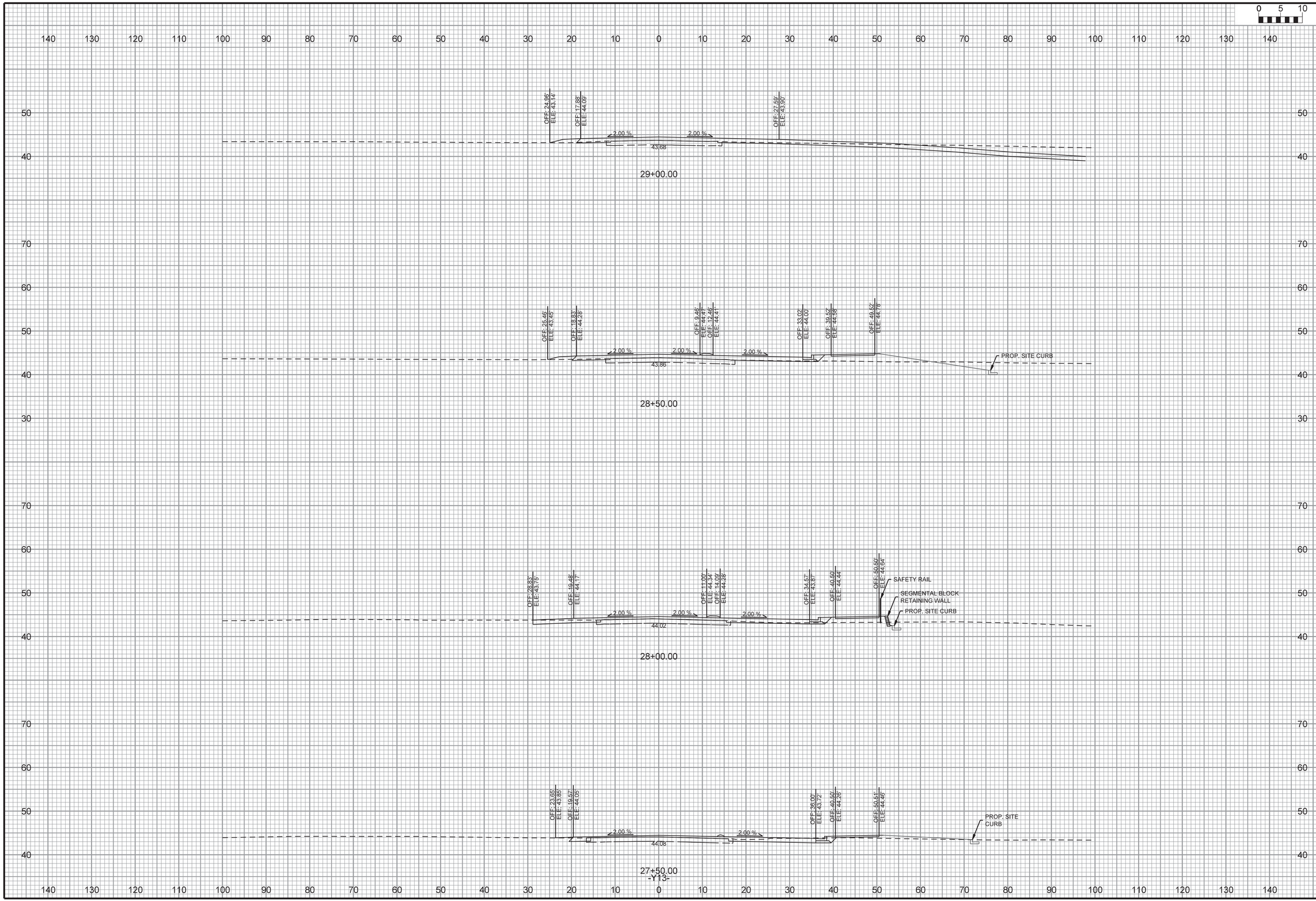

NORTH CAROLINA PROFESSIONAL ENGINEER SEAL 31533 JOHN G. TOWNSEND

FINAL

DAVENPORT
HOME OFFICE
305 WEST FOURTH STREET, SUITE 2A
WINSTON-SALEM, NC 27101
336.744.1636 www.davenportworld.com
NCBELS FIRM LICENSE NO. C-2522

PROJECT: 14-236
DATE: 07/2616
DESIGNED BY: JGT
DRAWN BY: JGT
CHECKED BY: DRC
SCALE: AS NOTED

NO.	DATE	REVISIONS DESCRIPTION

CLIENT:
HALPERN DEVELOPMENT COMPANY, LLC
4799 NORTHSIDE DRIVE
ATLANTA, GA 30327
P: (404) 290-1975

PROJECT:
OGDEN MARKET PLACE
WILMINGTON, NC

TITLE:
CROSS SECTION

SHEET NO.
XS-09

THIS DOCUMENT, TOGETHER WITH THE CONCEPTS AND DESIGNS PRESENTED THEREIN, IS INTENDED ONLY FOR THE SPECIFIC PURPOSE AND CLIENT FOR WHICH IT WAS PREPARED. REUSE OF OR IMPROPER RELIANCE UPON THIS DOCUMENT BY OTHERS, WITHOUT WRITTEN AUTHORIZATION AND ADAPTATION BY DAVENPORT, SHALL BE WITHOUT LIABILITY TO DAVENPORT AND SHALL BE A VIOLATION OF THE AGREEMENT BETWEEN DAVENPORT AND ITS CLIENT.

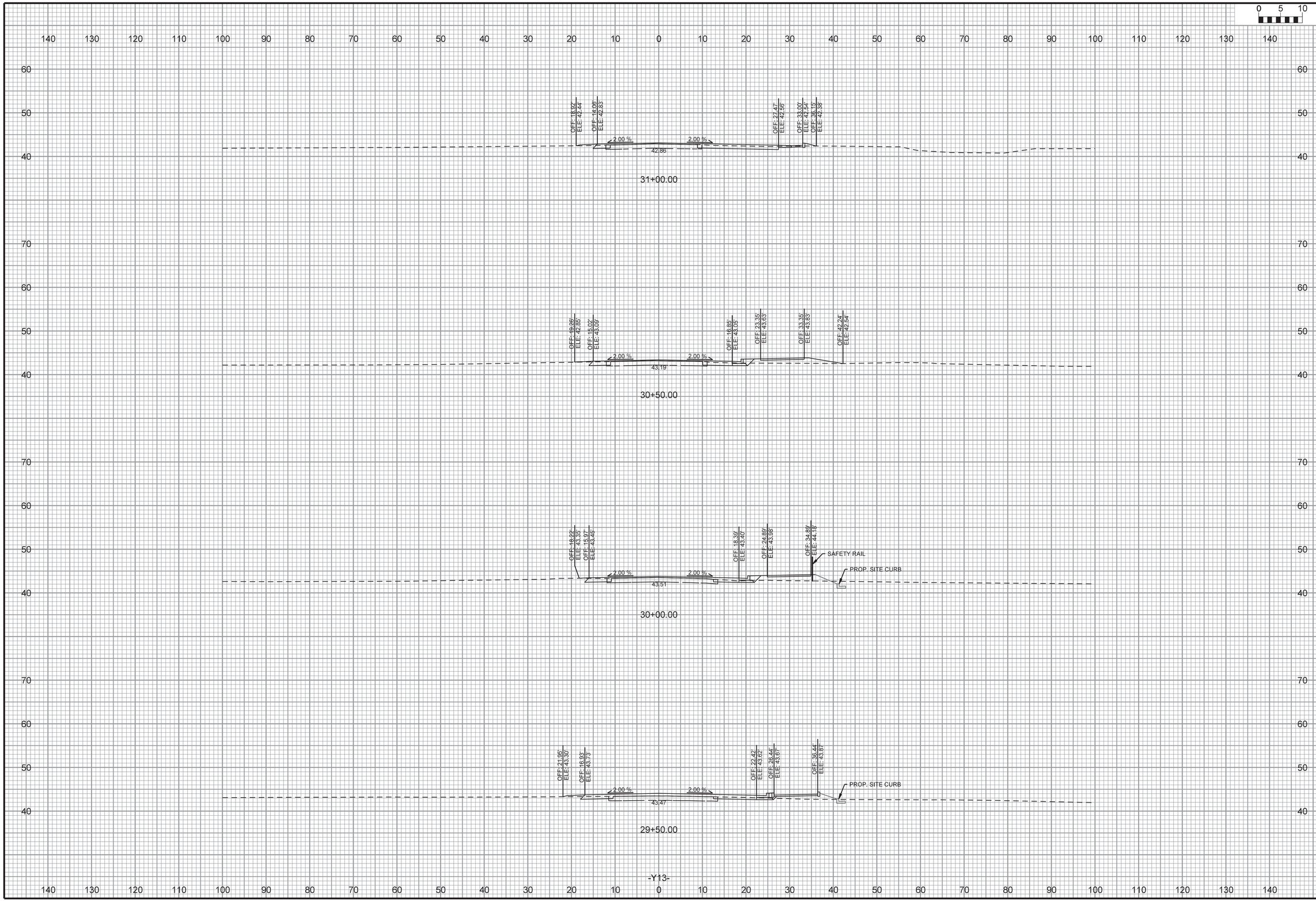

NORTH CAROLINA PROFESSIONAL ENGINEER SEAL 33533 JOHN G. TOWNSEND

FINAL

DAVENPORT
HOME OFFICE
305 WEST FOURTH STREET, SUITE 2A
WINSTON-SALEM, NC 27101
336.744.1636 www.davenportworld.com
NCBELS FIRM LICENSE NO. C-2522

PROJECT:	14-236
DATE:	07/2616
DESIGNED BY:	JGT
DRAWN BY:	JGT
CHECKED BY:	DRC
SCALE:	AS NOTED

REVISIONS

NO.	DATE	DESCRIPTION

CLIENT:
HALPERN DEVELOPMENT COMPANY, LLC
4799 NORTHSIDE DRIVE
ATLANTA, GA 30327
P: (404) 290-1975

PROJECT:
OGDEN MARKET PLACE
WILMINGTON, NC

TITLE:
CROSS SECTION

SHEET NO.
XS-10

THIS DOCUMENT, TOGETHER WITH THE CONCEPTS AND DESIGNS PRESENTED THEREIN, IS INTENDED ONLY FOR THE SPECIFIC PURPOSE AND CLIENT FOR WHICH IT WAS PREPARED. REUSE OF OR IMPROPER RELIANCE UPON THIS DOCUMENT BY OTHERS, WITHOUT WRITTEN AUTHORIZATION AND ADAPTATION BY DAVENPORT, SHALL BE WITHOUT LIABILITY TO DAVENPORT AND SHALL BE A VIOLATION OF THE AGREEMENT BETWEEN DAVENPORT AND ITS CLIENT.

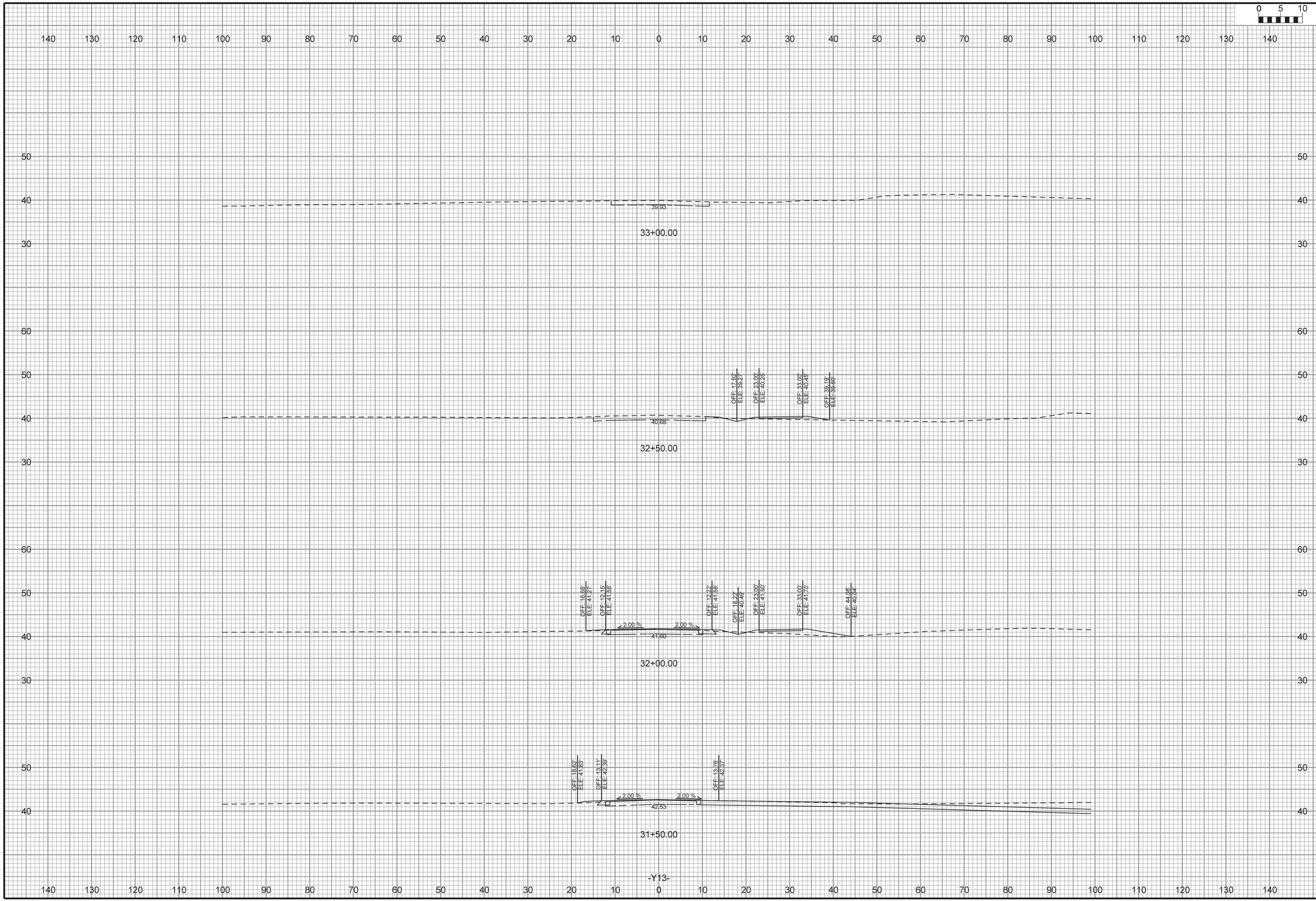

NORTH CAROLINA PROFESSIONAL ENGINEER SEAL 31533 JOHN G. TOWNSEND

FINAL

DAVENPORT
HOME OFFICE
305 WEST FOURTH STREET, SUITE 2A
WINSTON-SALEM, NC 27101
336.744.1636 www.davenportworld.com
NCBELS FIRM LICENSE NO. C-2522

PROJECT: 14-236
DATE: 07/2616
DESIGNED BY: JGT
DRAWN BY: JGT
CHECKED BY: DRC
SCALE: AS NOTED

NO.	DATE	REVISIONS DESCRIPTION

CLIENT:
HALPERN DEVELOPMENT COMPANY, LLC
4799 NORTHSIDE DRIVE
ATLANTA, GA 30327
P: (404) 290-1975

PROJECT:
OGDEN MARKET PLACE
WILMINGTON, NC

TITLE:
CROSS SECTION

SHEET NO.
XS-11

THIS DOCUMENT, TOGETHER WITH THE CONCEPTS AND DESIGNS PRESENTED THEREIN, IS INTENDED ONLY FOR THE SPECIFIC PURPOSE AND CLIENT FOR WHICH IT WAS PREPARED. REUSE OF OR IMPROPER RELIANCE UPON THIS DOCUMENT BY OTHERS, WITHOUT WRITTEN AUTHORIZATION AND ADAPTATION BY DAVENPORT, SHALL BE WITHOUT LIABILITY TO DAVENPORT AND SHALL BE A VIOLATION OF THE AGREEMENT BETWEEN DAVENPORT AND ITS CLIENT.

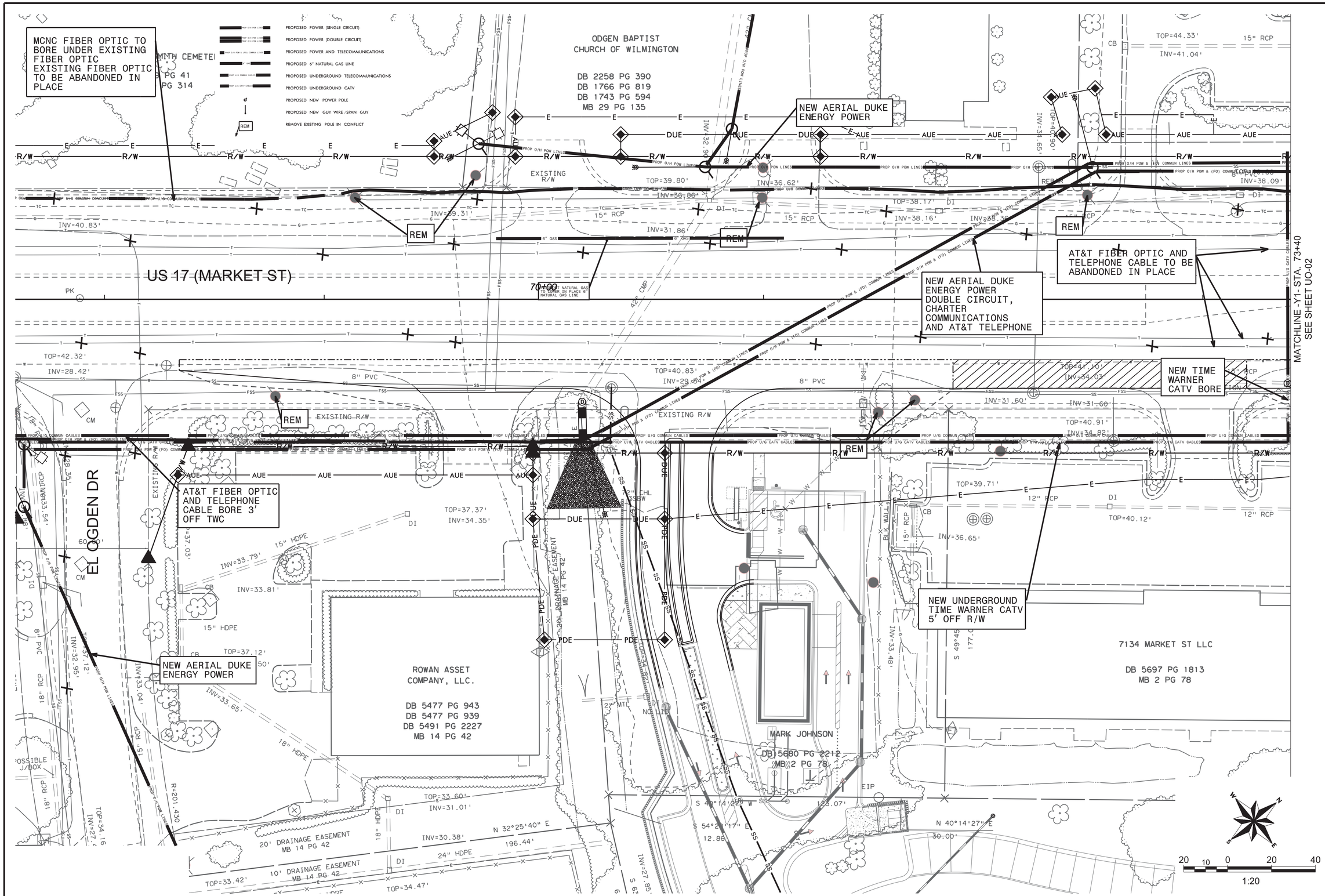

NORTH CAROLINA PROFESSIONAL SEAL 33533 ENGINEER JOHN G. TOWNSEND

FINAL

DAVENPORT
HOME OFFICE
305 WEST FOURTH STREET, SUITE 2A
WINSTON-SALEM, NC 27101
336.744.1636 www.davenportworld.com
NCBELS FIRM LICENSE NO. C-2522

PROJECT:	14-236
DATE:	07/2616
DESIGNED BY:	JGT
DRAWN BY:	JGT
CHECKED BY:	DRC
SCALE:	AS NOTED

REVISIONS

NO.	DATE	DESCRIPTION

CLIENT: HALPERN DEVELOPMENT COMPANY, LLC
4799 NORTHSIDE DRIVE
ATLANTA, GA 30327
P: (404) 290-1975

PROJECT: OGDEN MARKET PLACE
WILMINGTON, NC

TITLE: UTILITIES BY OTHERS PLAN SHEET

SHEET NO. UO-01

THIS DOCUMENT, TOGETHER WITH THE CONCEPTS AND DESIGNS PRESENTED THEREIN, IS INTENDED ONLY FOR THE SPECIFIC PURPOSE AND CLIENT FOR WHICH IT WAS PREPARED. REUSE OF OR IMPROPER RELIANCE UPON THIS DOCUMENT BY OTHERS, WITHOUT WRITTEN AUTHORIZATION AND ADAPTATION BY DAVENPORT, SHALL BE WITHOUT LIABILITY TO DAVENPORT AND SHALL BE A VIOLATION OF THE AGREEMENT BETWEEN DAVENPORT AND ITS CLIENT.

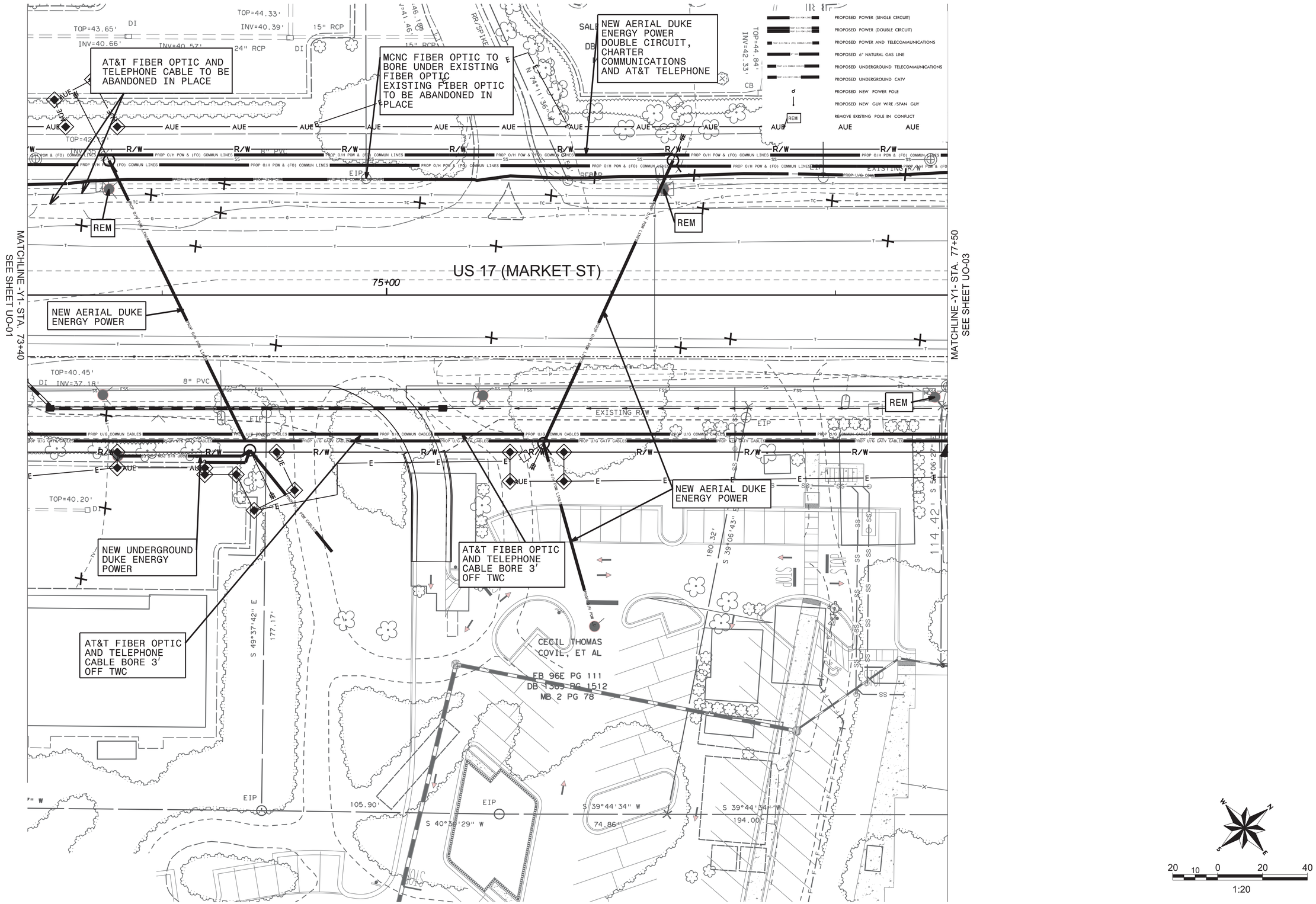

NORTH CAROLINA PROFESSIONAL ENGINEER SEAL 33533 JOHN G. TOWNSEND

FINAL

DAVENPORT
HOME OFFICE
305 WEST FOURTH STREET, SUITE 2A
WINSTON-SALEM, NC 27101
336.744.1636 www.davenportworld.com
NCBELS FIRM LICENSE NO. C-2522

PROJECT:	14-236
DATE:	07/26/16
DESIGNED BY:	JGT
DRAWN BY:	JGT
CHECKED BY:	DRC
SCALE:	AS NOTED

REVISIONS

NO.	DATE	DESCRIPTION

CLIENT:
HALPERN DEVELOPMENT COMPANY, LLC
4799 NORTHSIDE DRIVE
ATLANTA, GA 30327
P: (404) 290-1975

PROJECT:
OGDEN MARKET PLACE
WILMINGTON, NC

TITLE:
UTILITIES BY OTHERS PLAN SHEET

SHEET NO.
UO-02

THIS DOCUMENT, TOGETHER WITH THE CONCEPTS AND DESIGNS PRESENTED THEREIN, IS INTENDED ONLY FOR THE SPECIFIC PURPOSE AND CLIENT FOR WHICH IT WAS PREPARED. REUSE OF OR IMPROPER RELIANCE UPON THIS DOCUMENT BY OTHERS, WITHOUT WRITTEN AUTHORIZATION AND ADAPTATION BY DAVENPORT, SHALL BE WITHOUT LIABILITY TO DAVENPORT AND SHALL BE A VIOLATION OF THE AGREEMENT BETWEEN DAVENPORT AND ITS CLIENT.

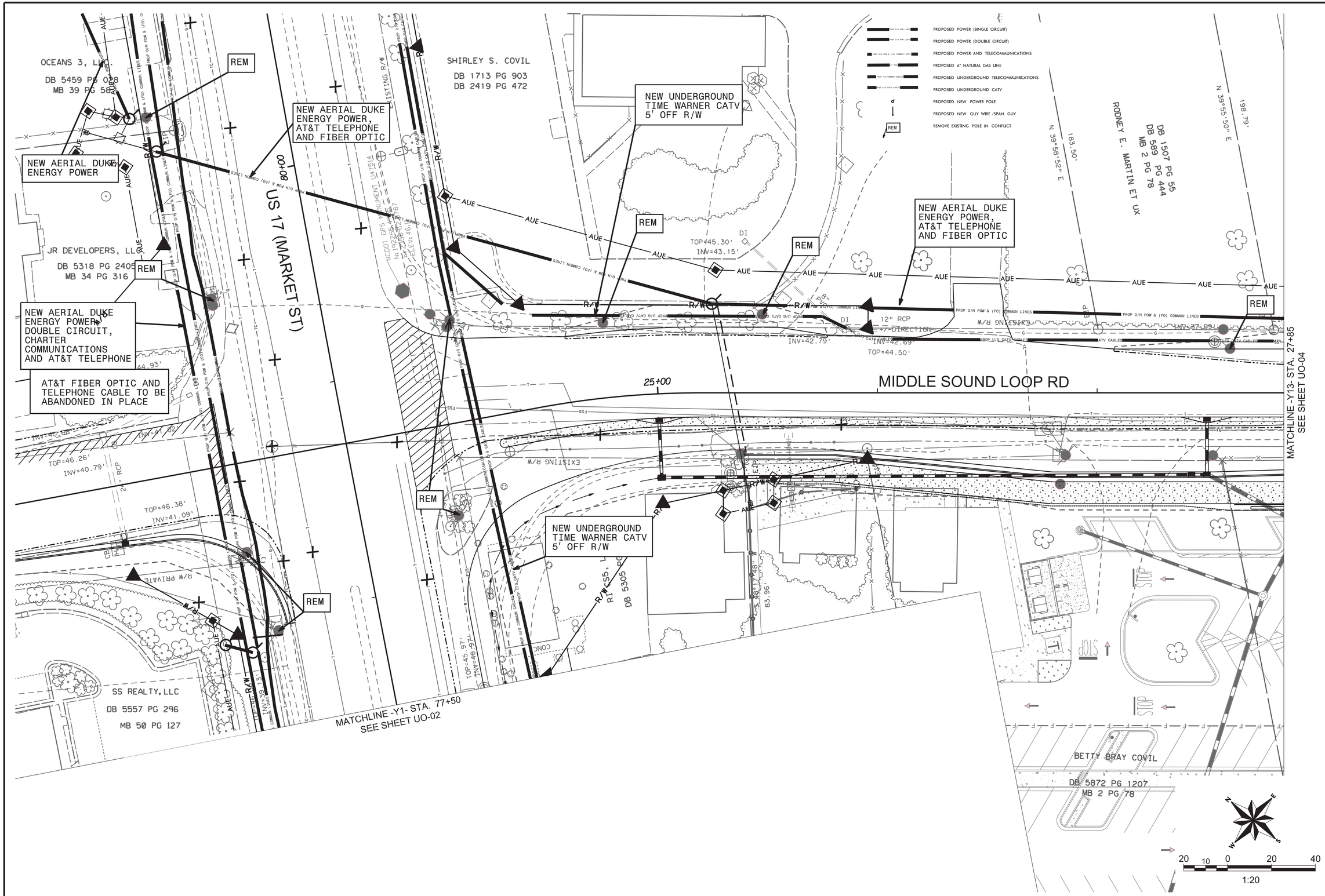

NORTH CAROLINA PROFESSIONAL ENGINEER SEAL 16533 JOHN G. TOWNSEND

FINAL

DAVENPORT
HOME OFFICE
305 WEST FOURTH STREET, SUITE 2A
WINSTON-SALEM, NC 27101
336.744.1636 www.davenportworld.com
NCBELS FIRM LICENSE NO. C-2522

PROJECT:	14-236
DATE:	07/2616
DESIGNED BY:	JGT
DRAWN BY:	JGT
CHECKED BY:	DRC
SCALE:	AS NOTED

REVISIONS

NO.	DATE	DESCRIPTION

CLIENT:
HALPERN DEVELOPMENT COMPANY, LLC
4799 NORTHSIDE DRIVE
ATLANTA, GA 30327
P: (404) 290-1975

PROJECT:
OGDEN MARKET PLACE
WILMINGTON, NC

TITLE:
UTILITIES BY OTHERS PLAN SHEET

SHEET NO.
UO-03

THIS DOCUMENT, TOGETHER WITH THE CONCEPTS AND DESIGNS PRESENTED THEREIN, IS INTENDED ONLY FOR THE SPECIFIC PURPOSE AND CLIENT FOR WHICH IT WAS PREPARED. REUSE OF OR IMPROPER RELIANCE UPON THIS DOCUMENT BY OTHERS, WITHOUT WRITTEN AUTHORIZATION AND ADAPTATION BY DAVENPORT, SHALL BE WITHOUT LIABILITY TO DAVENPORT AND SHALL BE A VIOLATION OF THE AGREEMENT BETWEEN DAVENPORT AND ITS CLIENT.

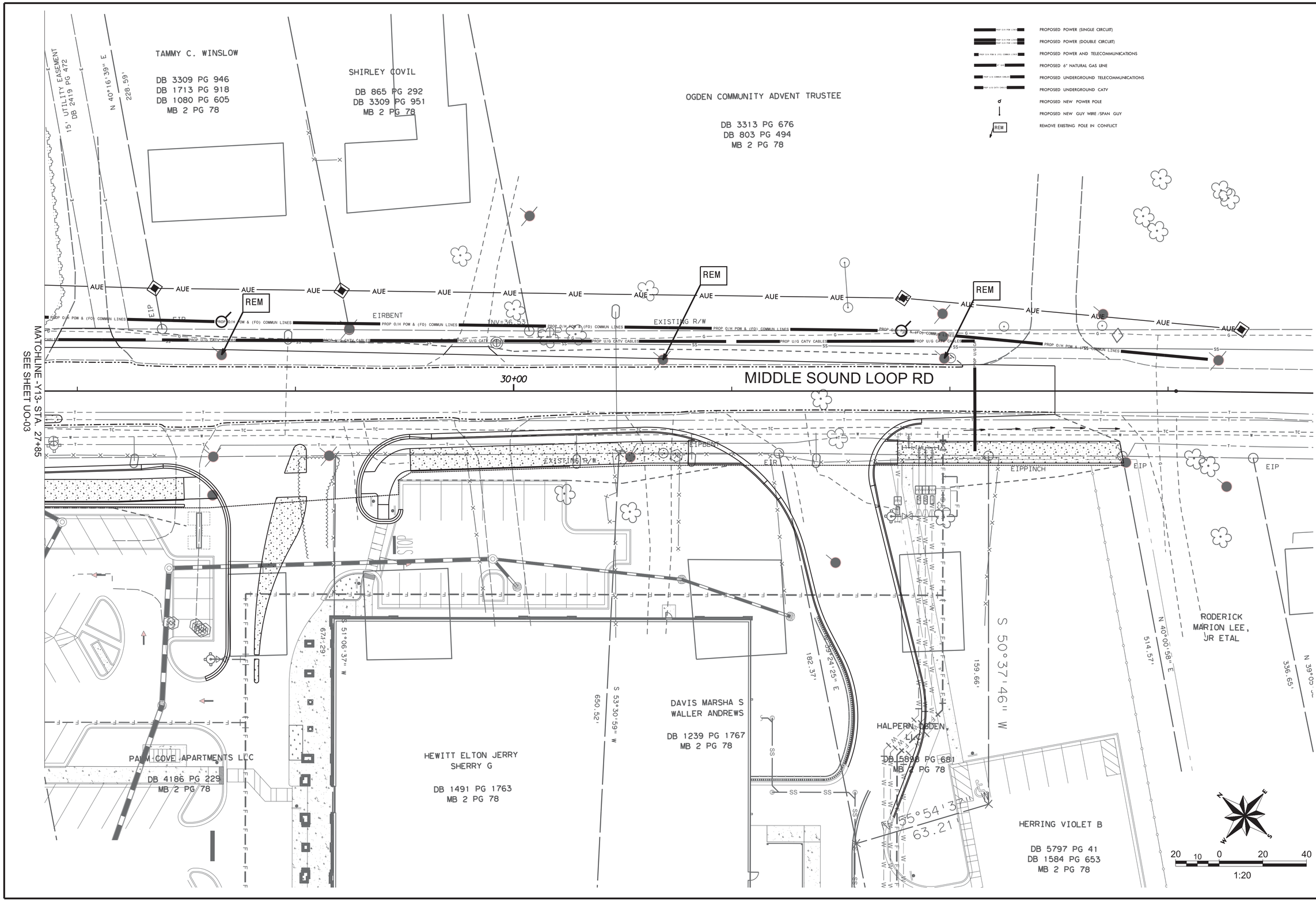

NORTH CAROLINA PROFESSIONAL SEAL 33533 ENGINEER JOHN G. TOWNSEND

FINAL

DAVENPORT
HOME OFFICE
305 WEST FOURTH STREET, SUITE 2A
WINSTON-SALEM, NC 27101
336.744.1636 www.davenportworld.com
NCBELS FIRM LICENSE NO. C-2522

PROJECT:	14-236
DATE:	07/2616
DESIGNED BY:	JGT
DRAWN BY:	JGT
CHECKED BY:	DRC
SCALE:	AS NOTED

REVISIONS

NO.	DATE	DESCRIPTION

CLIENT: HALPERN DEVELOPMENT COMPANY, LLC
4799 NORTHSIDE DRIVE
ATLANTA, GA 30327
P: (404) 290-1975

PROJECT: OGDEN MARKET PLACE
WILMINGTON, NC

TITLE: UTILITIES BY OTHERS
PLAN SHEET

SHEET NO.
UO-04

THIS DOCUMENT, TOGETHER WITH THE CONCEPTS AND DESIGNS PRESENTED THEREIN, IS INTENDED ONLY FOR THE SPECIFIC PURPOSE AND CLIENT FOR WHICH IT WAS PREPARED. REUSE OF OR IMPROPER RELIANCE UPON THIS DOCUMENT BY OTHERS, WITHOUT WRITTEN AUTHORIZATION AND ADAPTATION BY DAVENPORT, SHALL BE WITHOUT LIABILITY TO DAVENPORT AND SHALL BE A VIOLATION OF THE AGREEMENT BETWEEN DAVENPORT AND ITS CLIENT.