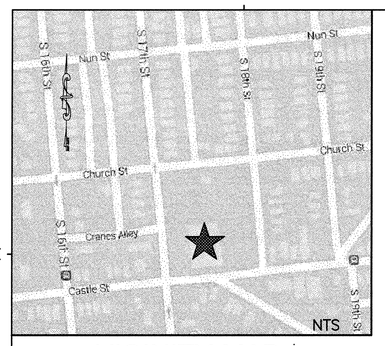

VICINITY MAP

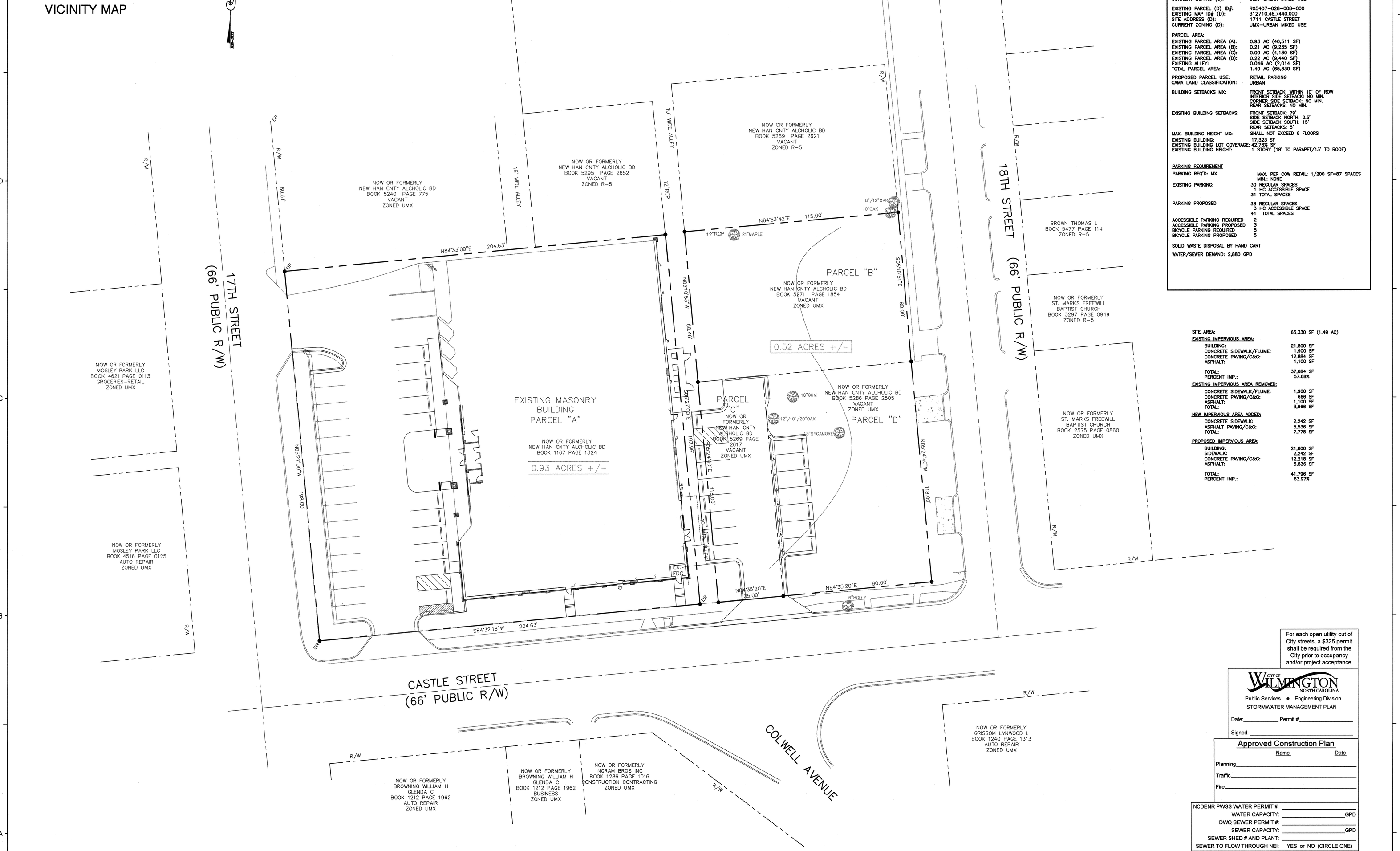

SITE DATA TABLE	
USE:	RETAIL SALES (ALCOHOL)
PROPERTY OWNER:	NEW HANOVER COUNTY ALCOHOLIC BOARD
EXISTING PARCEL (A) ID#:	R05407-028-006-000
EXISTING MAP ID# (A):	312710.46.5473.000
SITE ADDRESS (A):	523 S. 17TH STREET
CURRENT ZONING (A):	UMX-URBAN MIXED USE
EXISTING PARCEL (B) ID#:	R05407-028-009-000
EXISTING MAP ID# (B):	312710.46.7510.000
SITE ADDRESS (B):	510 S. 18TH STREET
CURRENT ZONING (B):	UMX-URBAN MIXED USE
EXISTING PARCEL (C) ID#:	R05407-028-007-000
EXISTING MAP ID# (C):	312710.46.6399.000
SITE ADDRESS (C):	CASTLE STREET
CURRENT ZONING (C):	UMX-URBAN MIXED USE
EXISTING PARCEL (D) ID#:	R05407-028-008-000
EXISTING MAP ID# (D):	312710.46.7440.000
SITE ADDRESS (D):	1711 CASTLE STREET
CURRENT ZONING (D):	UMX-URBAN MIXED USE
PARCEL AREA:	
EXISTING PARCEL AREA (A):	0.93 AC (40,511 SF)
EXISTING PARCEL AREA (B):	0.21 AC (9,235 SF)
EXISTING PARCEL AREA (C):	0.09 AC (4,130 SF)
EXISTING PARCEL AREA (D):	0.22 AC (9,440 SF)
EXISTING ALLEY:	0.046 AC (2,014 SF)
TOTAL PARCEL AREA:	1.49 AC (65,330 SF)
PROPOSED PARCEL USE:	RETAIL PARKING
CAMA LAND CLASSIFICATION:	URBAN
BUILDING SETBACKS MX:	FRONT SETBACK: WITHIN 10' OF ROW INTERIOR SIDE SETBACK: NO MIN. CORNER SIDE SETBACK: NO MIN. REAR SETBACKS: NO MIN.
EXISTING BUILDING SETBACKS:	FRONT SETBACK: 79' SIDE SETBACK NORTH: 2.5' SIDE SETBACK SOUTH: 15' REAR SETBACKS: 5'
MAX. BUILDING HEIGHT MX:	SHALL NOT EXCEED 6 FLOORS
EXISTING BUILDING:	17,323 SF
EXISTING BUILDING LOT COVERAGE:	42.76% SF
EXISTING BUILDING HEIGHT:	1 STORY (18' TO PARAPET/13' TO ROOF)
PARKING REQUIREMENT	
PARKING REQ'D: MX	MAX. PER COW RETAIL: 1/200 SF=87 SPACES MIN.: NONE
EXISTING PARKING:	30 REGULAR SPACES 1 HC ACCESSIBLE SPACE 31 TOTAL SPACES
PARKING PROPOSED	38 REGULAR SPACES 3 HC ACCESSIBLE SPACE 41 TOTAL SPACES
ACCESSIBLE PARKING REQUIRED	2
ACCESSIBLE PARKING PROPOSED	3
BICYCLE PARKING REQUIRED	5
BICYCLE PARKING PROPOSED	5
SOLID WASTE DISPOSAL BY HAND CART	
WATER/SEWER DEMAND: 2,880 GPD	

SITE AREA:	65,330 SF (1.49 AC)
EXISTING IMPERVIOUS AREA:	
BUILDING:	21,800 SF
CONCRETE SIDEWALK/FLUME:	1,900 SF
CONCRETE PAVING/C&G:	12,884 SF
ASPHALT:	1,100 SF
TOTAL:	37,684 SF
PERCENT IMP.:	57.68%
EXISTING IMPERVIOUS AREA REMOVED:	
CONCRETE SIDEWALK/FLUME:	1,900 SF
CONCRETE PAVING/C&G:	666 SF
ASPHALT:	1,100 SF
TOTAL:	3,666 SF
NEW IMPERVIOUS AREA ADDED:	
CONCRETE SIDEWALK:	2,242 SF
ASPHALT PAVING/C&G:	5,536 SF
TOTAL:	7,778 SF
PROPOSED IMPERVIOUS AREA:	
BUILDING:	21,800 SF
SIDEWALK:	2,242 SF
CONCRETE PAVING/C&G:	12,218 SF
ASPHALT:	5,536 SF
TOTAL:	41,796 SF
PERCENT IMP.:	63.97%

For each open utility cut of City streets, a $325 permit shall be required from the City prior to occupancy and/or project acceptance.

CITY OF WILMINGTON NORTH CAROLINA
Public Services • Engineering Division
STORMWATER MANAGEMENT PLAN
Date:_____ Permit #_____
Signed: _____

Approved Construction Plan

	Name	Date
Planning		
Traffic		
Fire		

NCDENR PWSS WATER PERMIT #: _____
WATER CAPACITY: _____GPD
DWQ SEWER PERMIT #: _____
SEWER CAPACITY: _____GPD
SEWER SHED # AND PLANT: _____
SEWER TO FLOW THROUGH NEI: YES or NO (CIRCLE ONE)

SCALE: 1" = 20'
0 20 40 60

NEW HANOVER COUNTY ABC FACILITY RENOVATIONS

NORRIS & TUNSTALL CONSULTING ENGINEERS, P.C.
902 MARKET STREET
WILMINGTON, NC 28401
PHONE (910) 343-9653
FAX (910) 343-9604
office@nkteng.com
licence #C-3641

CONSTRUCTION DOCUMENTS

LS3P

LS3P ASSOCIATES LTD.
2528 INDEPENDENCE BLVD. SUITE 200
WILMINGTON, NORTH CAROLINA 28412
TEL. 910.790.9901 FAX 910.790.3111
WWW.LS3P.COM

NORTH CAROLINA PROFESSIONAL ENGINEER SEAL 19051 JOHN S. TUNSTALL

PRELIMINARY

MEMBERS OF THE AMERICAN INSTITUTE OF ARCHITECTS

COPYRIGHT 2015 ALL RIGHTS RESERVED
PRINTED OR ELECTRONIC DRAWINGS AND DOCUMENTATION MAY NOT BE REPRODUCED IN ANY FORM WITHOUT WRITTEN PERMISSION FROM LS3P ASSOCIATES LTD.

REVISIONS:

PROJECT: 7101-141210
DATE: 04/01/15
DRAWN BY: NKS
CHECKED BY: JST

OVERALL SITE PLAN

C-0

NT JOB #14105

SOLUTIONS THROUGH LISTENING
SERVICE BY DESIGN

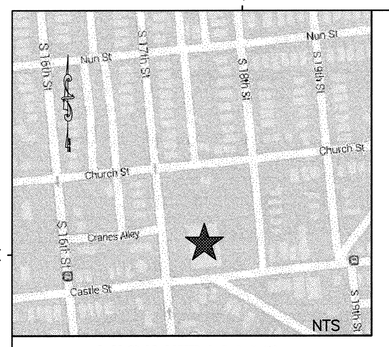

VICINITY MAP

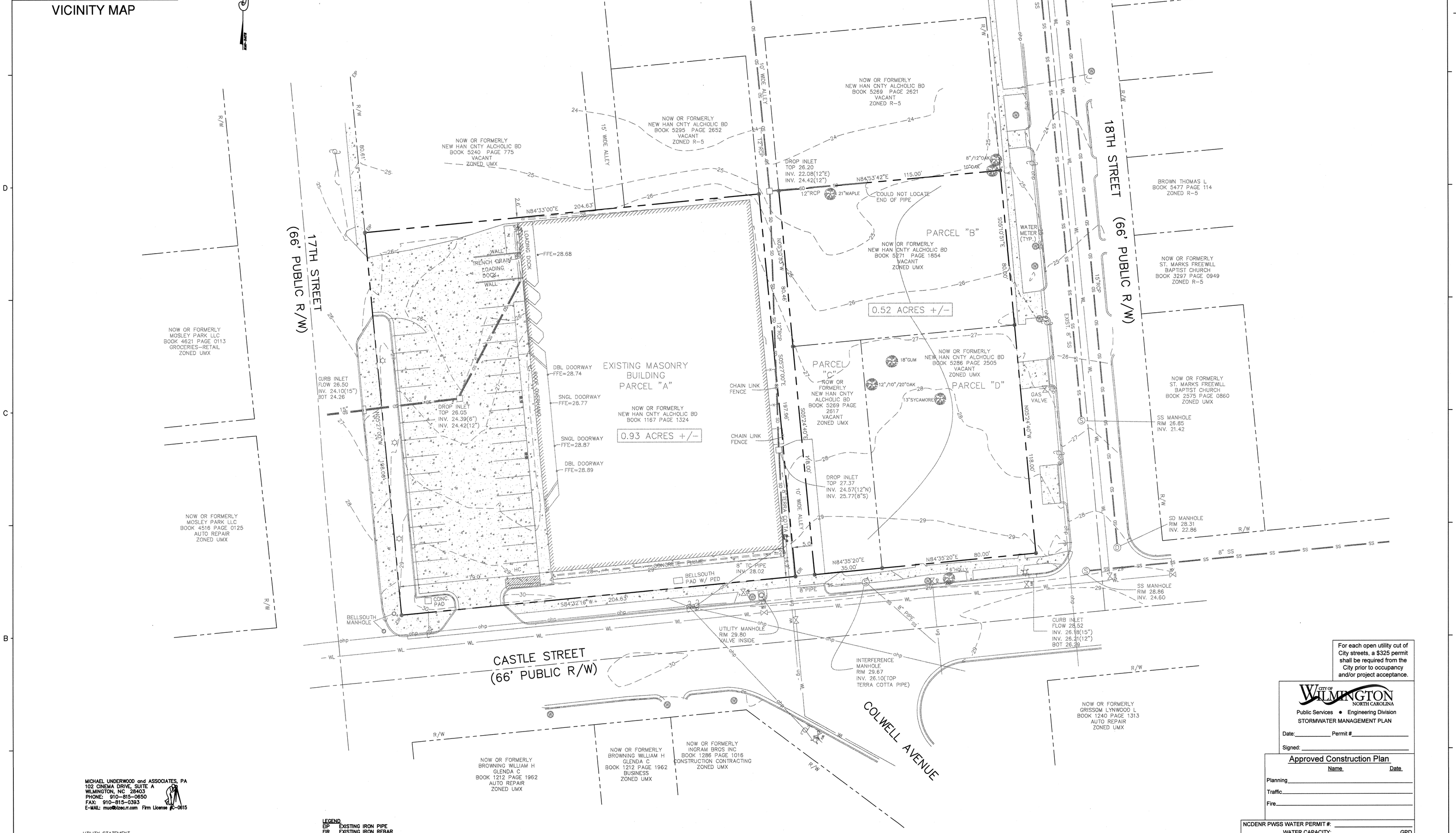

MICHAEL UNDERWOOD and ASSOCIATES, PA
102 CINEMA DRIVE, SUITE A
WILMINGTON, NC 28403
PHONE: 910-815-0650
FAX: 910-815-0393
E-MAIL: muat@bizec.rr.com Firm License #C-0615

UTILITY STATEMENT
THE UNDERGROUND UTILITIES SHOWN HAVE BEEN LOCATED FROM FIELD SURVEY INFORMATION AND EXISTING DRAWINGS. THE SURVEYOR MAKES NO GUARANTEES THAT THE UNDERGROUND UTILITIES SHOWN COMPRISE ALL SUCH UTILITIES IN THE AREA, EITHER IN SERVICE OR ABANDONED. THE SURVEYOR FURTHER DOES NOT WARRANT THAT THE UNDERGROUND UTILITIES SHOWN ARE IN THE EXACT LOCATION INDICATED ALTHOUGH HE DOES CERTIFY THAT THEY ARE LOCATED AS ACCURATELY AS POSSIBLE FROM INFORMATION AVAILABLE. THE SURVEYOR HAS NOT PHYSICALLY LOCATED UNDERGROUND UTILITIES.

LEGEND
EIP EXISTING IRON PIPE
EIR EXISTING IRON REBAR

SURVEY REFERENCE
BOOK 1167 PAGE 1324
BOOK 5269 PAGE 2617
BOOK 5286 PAGE 2505
BOOK 5271 PAGE 1854

For each open utility cut of City streets, a $325 permit shall be required from the City prior to occupancy and/or project acceptance.

CITY OF WILMINGTON NORTH CAROLINA
Public Services • Engineering Division
STORMWATER MANAGEMENT PLAN
Date:_____ Permit #_____
Signed: _____

Approved Construction Plan

	Name	Date
Planning		
Traffic		
Fire		

NCDENR PWSS WATER PERMIT #:	
WATER CAPACITY:	GPD
DWQ SEWER PERMIT #:	
SEWER CAPACITY:	GPD
SEWER SHED # AND PLANT:	
SEWER TO FLOW THROUGH NEI:	YES or NO (CIRCLE ONE)

SCALE: 1" = 20'
0 20 40 60

NEW HANOVER COUNTY ABC FACILITY RENOVATIONS

NORRIS & TUNSTALL CONSULTING ENGINEERS, P.C.
902 MARKET STREET
WILMINGTON, NC 28401
PHONE (910) 343-9853
FAX (910) 343-9604
office@nktseng.com
licence #C-3641

CONSTRUCTION DOCUMENTS

LS3P

LS3P ASSOCIATES LTD.
2528 INDEPENDENCE BLVD. SUITE 200
WILMINGTON, NORTH CAROLINA 28412
TEL. 910.790.9901 FAX 910.790.3111
WWW.LS3P.COM

PRELIMINARY

NORTH CAROLINA PROFESSIONAL ENGINEER SEAL 19031 JOHN S. TUNSTALL II

MEMBERS OF THE AMERICAN INSTITUTE OF ARCHITECTS

COPYRIGHT 2015 ALL RIGHTS RESERVED
PRINTED OR ELECTRONIC DRAWINGS AND DOCUMENTATION MAY NOT BE REPRODUCED IN ANY FORM WITHOUT WRITTEN PERMISSION FROM LS3P ASSOCIATES LTD.

REVISIONS:

PROJECT: 7101-141210
DATE: 04/01/15
DRAWN BY: NKS
CHECKED BY: JST

SURVEY OF EXISTING CONDITIONS

C-1

NT JOB #14105

SOLUTIONS THROUGH LISTENING
SERVICE BY DESIGN

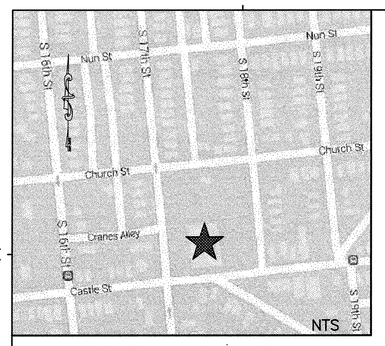

VICINITY MAP

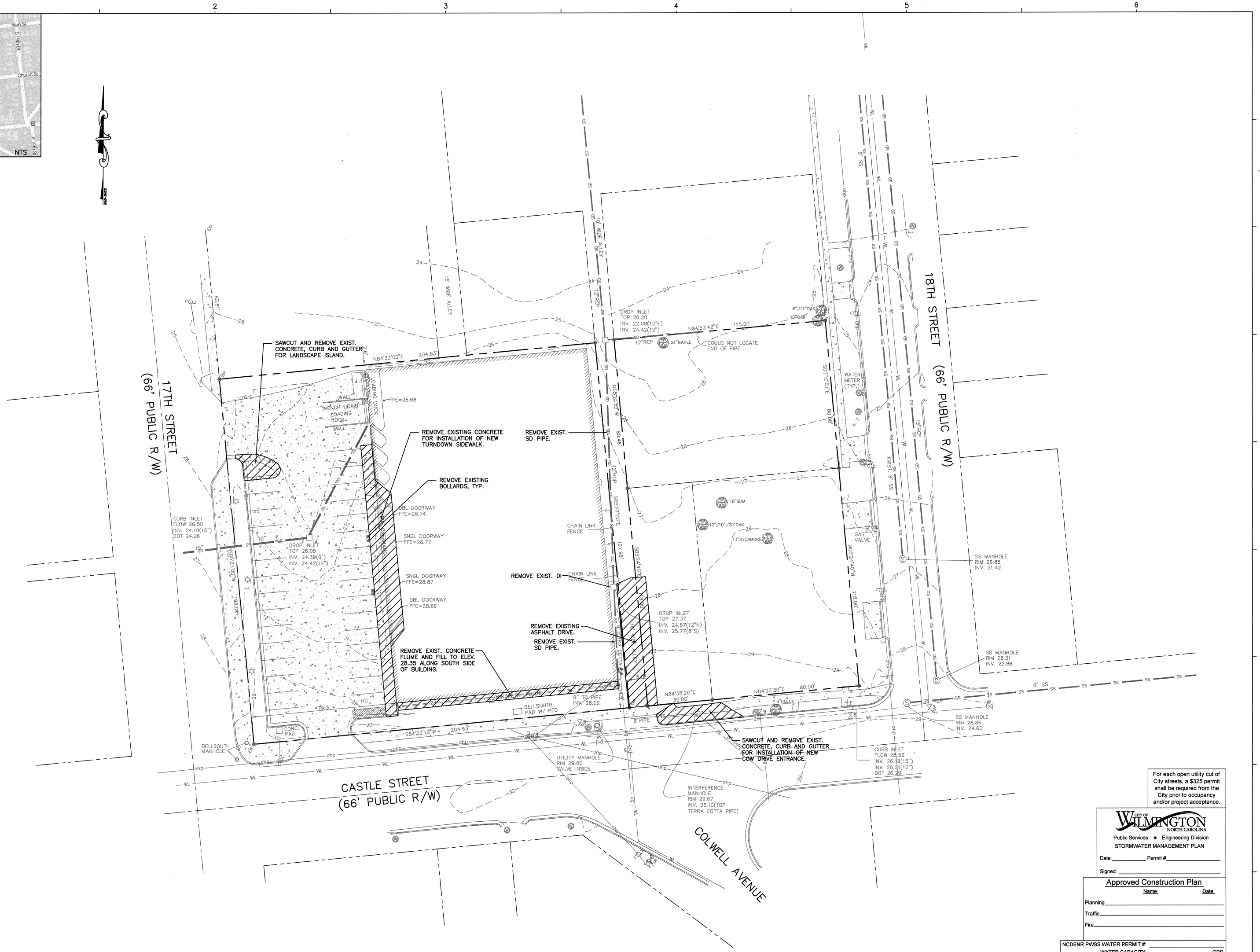

For each open utility cut of City streets, a $325 permit shall be required from the City prior to occupancy and/or project acceptance.

CITY OF WILMINGTON NORTH CAROLINA
Public Services • Engineering Division
STORMWATER MANAGEMENT PLAN
Date:_____ Permit #_____
Signed: _____

Approved Construction Plan

	Name	Date
Planning		
Traffic		
Fire		

NCDENR PWSS WATER PERMIT #: _____
WATER CAPACITY: _____GPD
DWQ SEWER PERMIT #: _____
SEWER CAPACITY: _____GPD
SEWER SHED # AND PLANT: _____
SEWER TO FLOW THROUGH NEI: YES or NO (CIRCLE ONE)

NEW HANOVER COUNTY ABC FACILITY RENOVATIONS

NORRIS & TUNSTALL CONSULTING ENGINEERS, P.C.
902 MARKET STREET
WILMINGTON, NC 28401
PHONE (910) 343-9653
FAX (910) 343-9604
office@nisteng.com
licence #C-3641

CONSTRUCTION DOCUMENTS

LS3P

LS3P ASSOCIATES LTD.
2528 INDEPENDENCE BLVD. SUITE 200
WILMINGTON, NORTH CAROLINA 28412
TEL. 910.790.9901 FAX 910.790.3111
WWW.LS3P.COM

PRELIMINARY

NORTH CAROLINA REGISTERED PROFESSIONAL ENGINEER SEAL 19021 JOHN S. TUNSTALL

MEMBERS OF THE AMERICAN INSTITUTE OF ARCHITECTS

COPYRIGHT 2015 ALL RIGHTS RESERVED
PRINTED OR ELECTRONIC DRAWINGS AND DOCUMENTATION MAY NOT BE REPRODUCED IN ANY FORM WITHOUT WRITTEN PERMISSION FROM LS3P ASSOCIATES LTD.

REVISIONS:

PROJECT: 7101-141210
DATE: 04/01/15
DRAWN BY: NKS
CHECKED BY: JST

DEMOLITION PLAN

C-2

NT JOB #14105

SOLUTIONS THROUGH LISTENING
SERVICE BY DESIGN

NEW HANOVER COUNTY ABC FACILITY RENOVATIONS

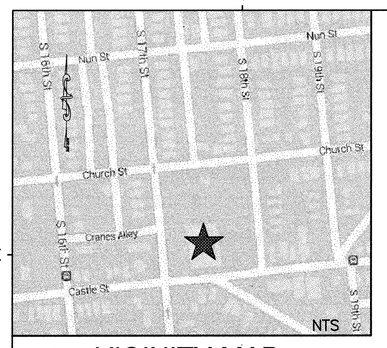

VICINITY MAP

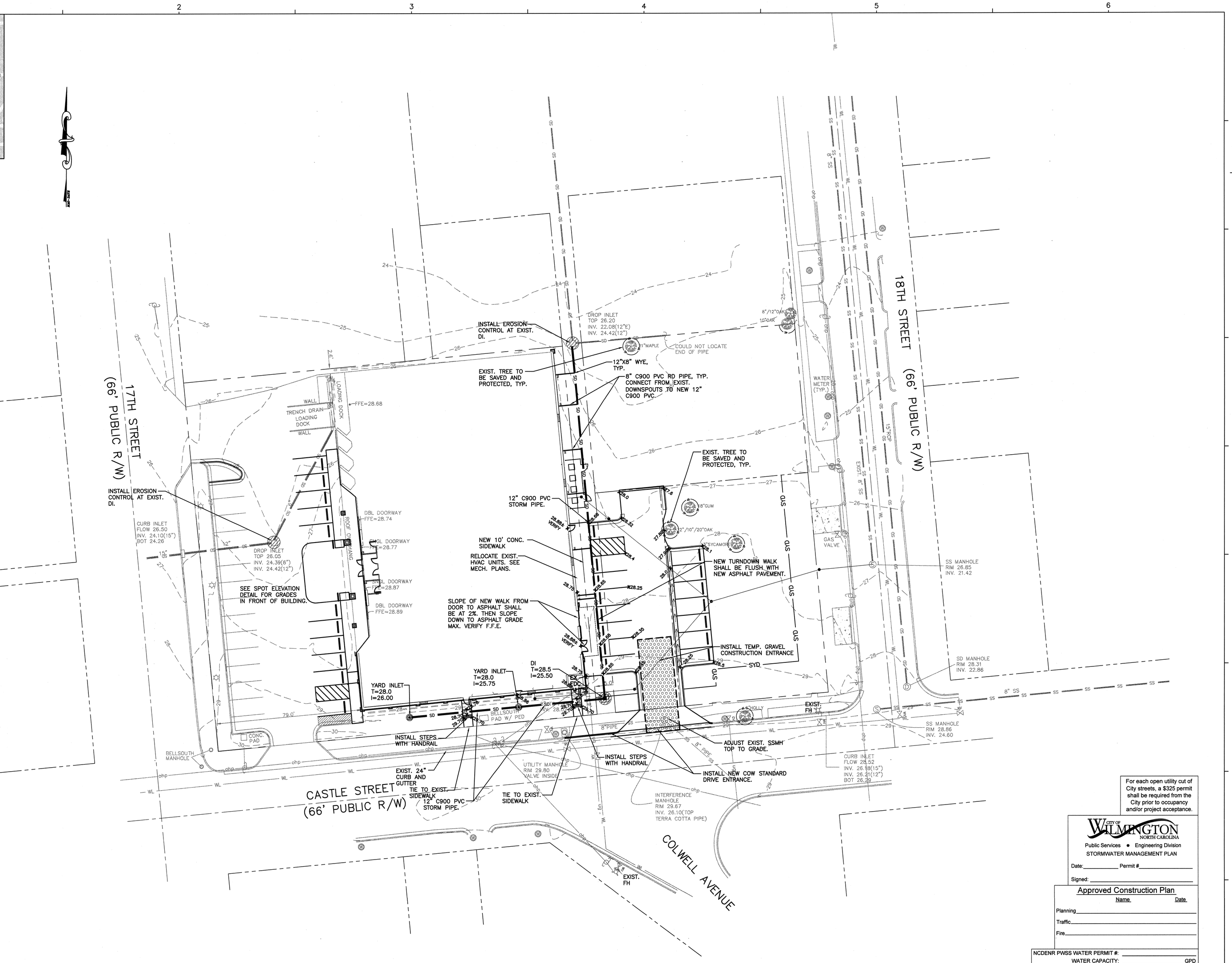

For each open utility cut of City streets, a $325 permit shall be required from the City prior to occupancy and/or project acceptance.

CITY OF WILMINGTON NORTH CAROLINA
Public Services • Engineering Division
STORMWATER MANAGEMENT PLAN
Date:_____ Permit #_____
Signed: _____

Approved Construction Plan

	Name.	Date.
Planning		
Traffic		
Fire		

NCDENR PWSS WATER PERMIT #:	
WATER CAPACITY:	GPD
DWQ SEWER PERMIT #:	
SEWER CAPACITY:	GPD
SEWER SHED # AND PLANT:	
SEWER TO FLOW THROUGH NEI:	YES or NO (CIRCLE ONE)

SCALE: 1" = 20'

0 20 40 60

NORRIS & TUNSTALL CONSULTING ENGINEERS, P.C.
902 MARKET STREET
WILMINGTON, NC 28401
PHONE (910) 343-9653
FAX (910) 343-9604
office@nkteng.com
licence #C-3641

CONSTRUCTION DOCUMENTS

LS3P

LS3P ASSOCIATES LTD.
2528 INDEPENDENCE BLVD. SUITE 200
WILMINGTON, NORTH CAROLINA 28412
TEL. 910.790.9901 FAX 910.790.3111
WWW.LS3P.COM

PRELIMINARY

NORTH CAROLINA PROFESSIONAL ENGINEER SEAL 19021 JOHN S. TUNSTALL II

MEMBERS OF THE AMERICAN INSTITUTE OF ARCHITECTS

COPYRIGHT 2015 ALL RIGHTS RESERVED. PRINTED OR ELECTRONIC DRAWINGS AND DOCUMENTATION MAY NOT BE REPRODUCED IN ANY FORM WITHOUT WRITTEN PERMISSION FROM LS3P ASSOCIATES LTD.

REVISIONS:

PROJECT: 7101-141210
DATE: 04/01/15
DRAWN BY: NKS
CHECKED BY: JST

GRADING, DRAINAGE AND EROSION CONTROL PLAN

C-3

NT JOB #14105

SOLUTIONS THROUGH LISTENING

SERVICE BY DESIGN

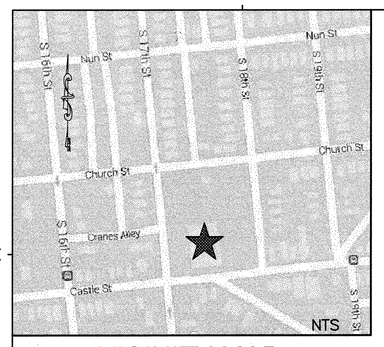

VICINITY MAP

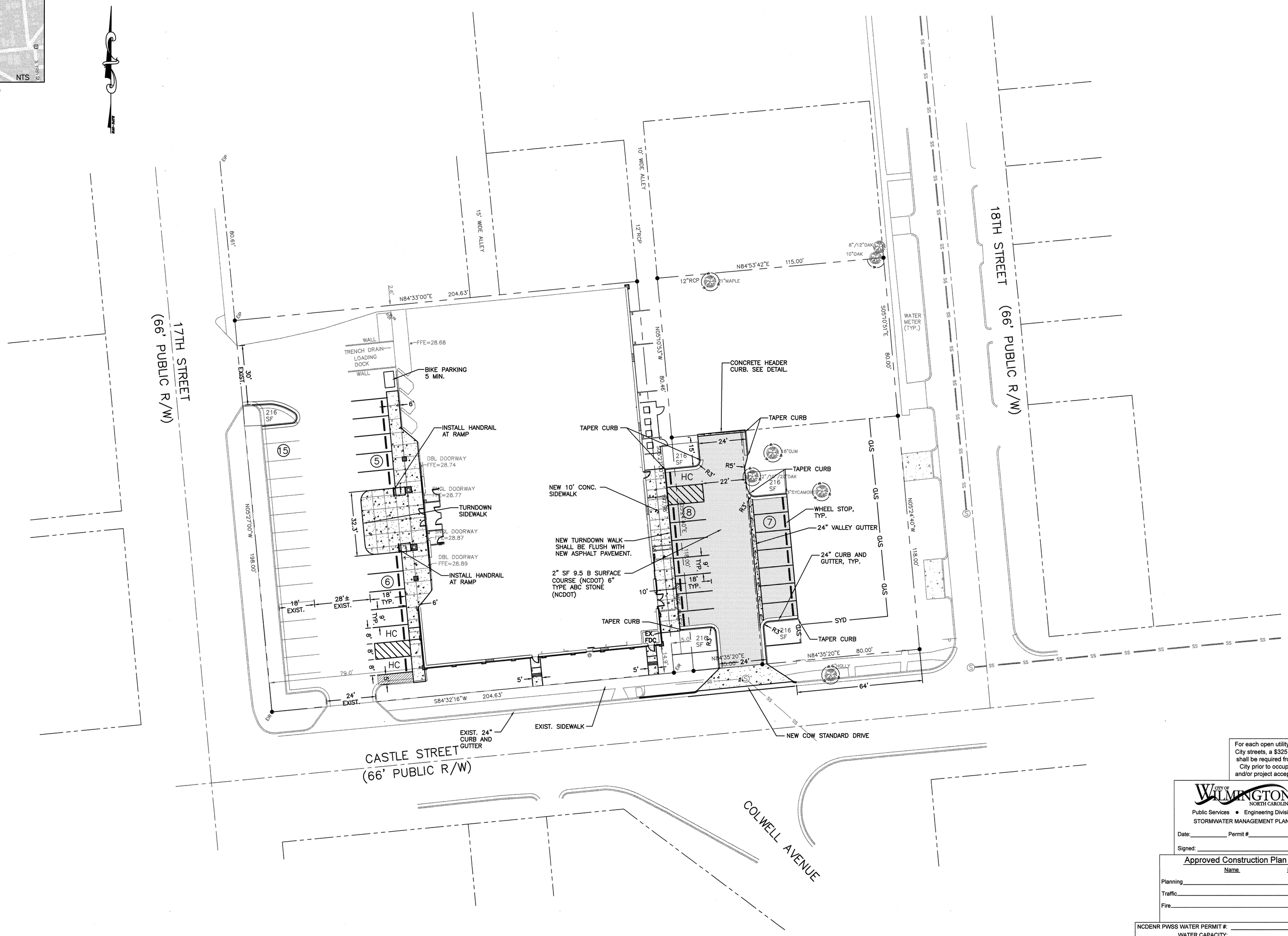

For each open utility cut of City streets, a $325 permit shall be required from the City prior to occupancy and/or project acceptance.

CITY OF WILMINGTON NORTH CAROLINA
Public Services • Engineering Division
STORMWATER MANAGEMENT PLAN

Date:_____ Permit #_____

Signed: _____

Approved Construction Plan

	Name	Date
Planning		
Traffic		
Fire		

NCDENR PWSS WATER PERMIT #: _____
WATER CAPACITY: _____GPD
DWQ SEWER PERMIT #: _____
SEWER CAPACITY: _____GPD
SEWER SHED # AND PLANT: _____
SEWER TO FLOW THROUGH NEI: YES or NO (CIRCLE ONE)

SCALE: 1" = 20'

0 20 40 60

NEW HANOVER COUNTY ABC FACILITY RENOVATIONS

NORRIS & TUNSTALL
CONSULTING ENGINEERS, P.C.
902 MARKET STREET
WILMINGTON, NC 28401
PHONE (910) 343-9653
FAX (910) 343-9604
office@nkteng.com
licence #C-3641

CONSTRUCTION DOCUMENTS

LS3P

LS3P ASSOCIATES LTD.
2528 INDEPENDENCE BLVD. SUITE 200
WILMINGTON, NORTH CAROLINA 28412
TEL. 910.790.9901 FAX 910.790.3111
WWW.LS3P.COM

PRELIMINARY

MEMBERS OF THE AMERICAN INSTITUTE OF ARCHITECTS

COPYRIGHT 2015 ALL RIGHTS RESERVED
PRINTED OR ELECTRONIC DRAWINGS AND DOCUMENTATION MAY NOT BE REPRODUCED IN ANY FORM WITHOUT WRITTEN PERMISSION FROM LS3P ASSOCIATES LTD.

REVISIONS:

PROJECT: 7101-141210
DATE: 04/01/15
DRAWN BY: NKS
CHECKED BY: JST

LAYOUT PLAN

C-4

NT JOB #14105

SOLUTIONS THROUGH LISTENING
SERVICE BY DESIGN

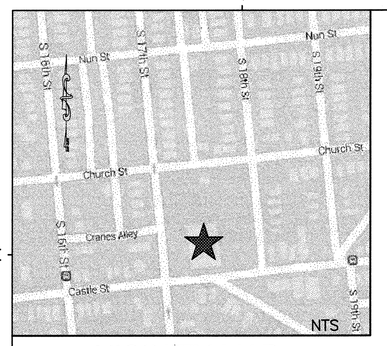

VICINITY MAP

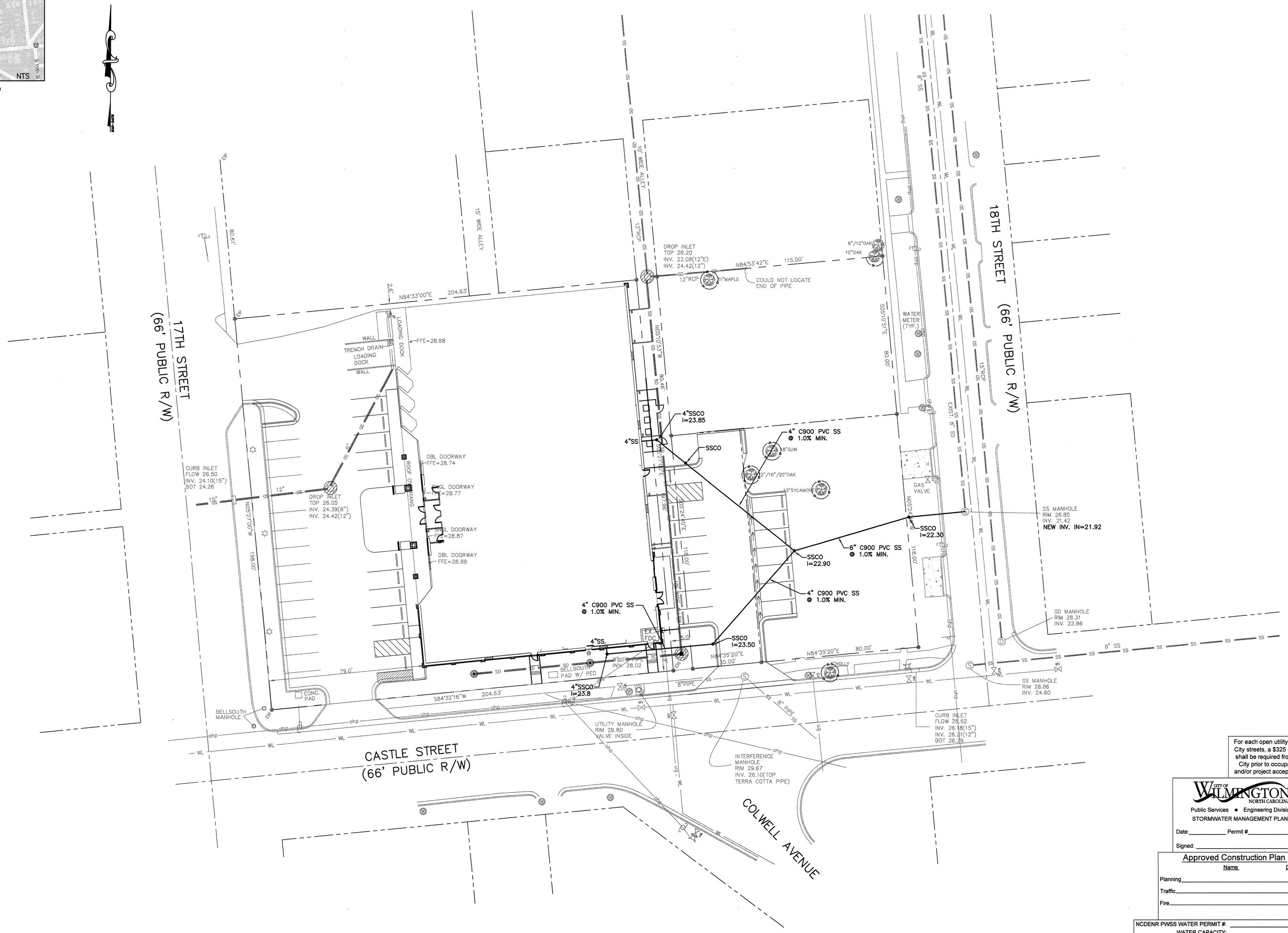

For each open utility cut of City streets, a $325 permit shall be required from the City prior to occupancy and/or project acceptance.

CITY OF WILMINGTON NORTH CAROLINA
Public Services • Engineering Division
STORMWATER MANAGEMENT PLAN
Date:_____ Permit #_____
Signed: _____

Approved Construction Plan

	Name	Date
Planning		
Traffic		
Fire		

NCDENR PWSS WATER PERMIT #: _____
WATER CAPACITY: _____GPD
DWQ SEWER PERMIT #: _____
SEWER CAPACITY: _____GPD
SEWER SHED # AND PLANT: _____
SEWER TO FLOW THROUGH NEI: YES or NO (CIRCLE ONE)

SCALE: 1" = 20'
0 20 40 60

NEW HANOVER COUNTY
ABC FACILITY RENOVATIONS

NORRIS & TUNSTALL
CONSULTING ENGINEERS, P.C.
902 MARKET STREET
WILMINGTON, NC 28401
PHONE (910) 343-9653
FAX (910) 343-9604
office@nkteng.com
licence #C-3641

CONSTRUCTION DOCUMENTS

LS3P

LS3P ASSOCIATES LTD.
2528 INDEPENDENCE BLVD. SUITE 200
WILMINGTON, NORTH CAROLINA 28412
TEL. 910.790.9901 FAX 910.790.3111
WWW.LS3P.COM

PRELIMINARY

NORTH CAROLINA PROFESSIONAL ENGINEER 19651 JOHN S. TUNSTALL

MEMBERS OF THE AMERICAN INSTITUTE OF ARCHITECTS

COPYRIGHT 2015 ALL RIGHTS RESERVED PRINTED OR ELECTRONIC DRAWINGS AND DOCUMENTATION MAY NOT BE REPRODUCED IN ANY FORM WITHOUT WRITTEN PERMISSION FROM LS3P ASSOCIATES LTD.

REVISIONS:

PROJECT: 7101-141210
DATE: 04/01/15
DRAWN BY: NKS
CHECKED BY: JST

UTILITY PLAN

C-5

NT JOB #14105

SOLUTIONS THROUGH LISTENING
SERVICE BY DESIGN

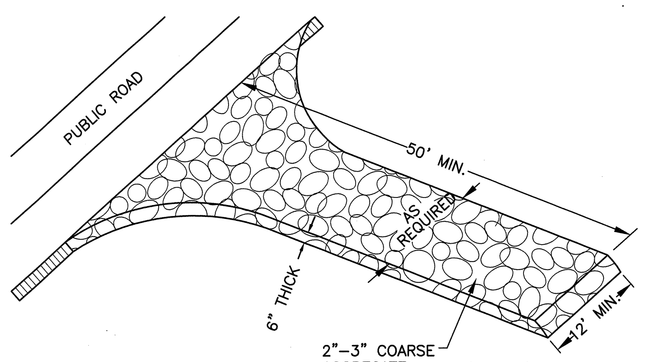

NOT TO SCALE

1 TEMPORARY GRAVELLED CONSTRUCTION ENTRANCE

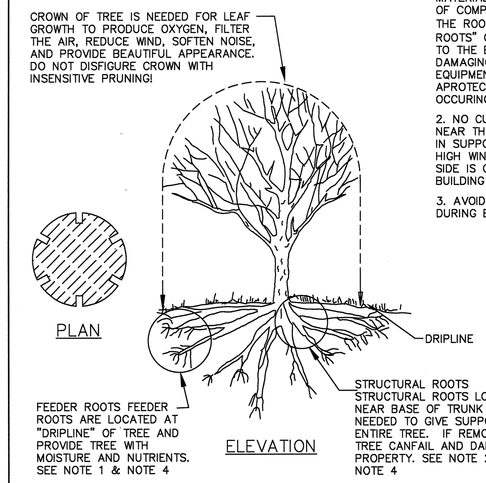

TREE PROTECTION DURING CONSTRUCTION

1. DO NOT COMPACT SOIL BENEATH TREES. NO VEHICLE SHALL BE ALLOWED TO PARK UNDER TREES. NO HEAVY MATERIALS SHALL BE STORED BENEATH TREES. RESULTS OF COMPACTION CAUSE WATER AND AIR NOT TO REACH THE ROOTS AND THE TREE WILL DIE. THESE "FEEDING ROOTS" OCCUR WELL AWAY FROM THE BASE OF THE TREE TO THE EDGE OF THE OVERHEAD BRANCH CANOPY. DAMAGING THE BARK WITH LAWNMOWERS, CONSTRUCTION EQUIPMENT, OR ANYTHING ELSE IS PROHIBITED. APROTECTIVE BARRIER SHOULD PREVENT DAMAGE FROM OCCURING DURING CONSTRUCTION.

2. NO CUTTING OF LARGE STRUCTURAL ROOTS LOCATED NEAR THE BASE OF THE TRUNK. THESE ARE ESSENTIAL IN SUPPORTING THE TREE AND HOLDING IT UPRIGHT IN HIGH WINDS. REMOVAL OF THESE ROOTS ALONG ONE SIDE IS OFTEN DONE BECAUSE OF A WALK, PAVING OR BUILDING WHICH IS BEING CONSTRUCTED.

3. AVOID CUT AND FILL WITHIN DIAMETER OF TREE CROWN DURING EXCAVATION.

NOT TO SCALE

2 METHOD OF TREE PROTECTION DURING CONSTRUCTION

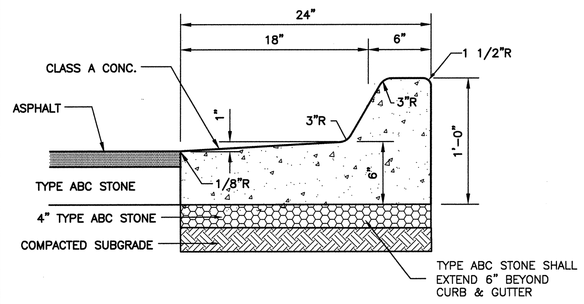

NOTE: CURB TYPE DEPENDS ON GRADES SHOWN ON GRADING PLAN. GRADES INDICATING FALL AWAY FROM CURB SHALL BE SPILL OFF TYPE CURB. GRADES INDICATING CURB ACCEPTING FLOW SHALL BE FLOW LINE TYPE.

NOT TO SCALE

3 24" CURB AND GUTTER SECTION (SPILL-OFF)

EROSION CONTROL NOTES AND MAINTENANCE PLAN:

1. ALL EROSION AND SEDIMENT CONTROL MEASURES WILL BE CHECKED FOR STABILITY AND OPERATION FOLLOWING EVERY RUNOFF-PRODUCING RAINFALL, BUT IN NO CASE, LESS THAN ONCE EVERY WEEK AND WITHIN 24 HOURS OF EVERY HALF-INCH RAINFALL.

2. ALL POINTS OF EGRESS WILL HAVE CONSTRUCTION ENTRANCES THAT WILL BE PERIODICALLY TOP-DRESSED WITH AN ADDITIONAL 2 INCHES OF #4 STONE TO MAINTAIN PROPER DEPTH. THEY WILL BE MAINTAINED IN A CONDITION TO PREVENT MUD OR SEDIMENT FROM LEAVING THE SITE. IMMEDIATELY REMOVE OBJECTIONABLE MATERIAL SPILLED WASHED OR TRACKED ONTO THE CONSTRUCTION ENTRANCE OR ROADWAYS.

3. SEDIMENT WILL BE REMOVED FROM HARDWARE CLOTH AND GRAVEL INLET PROTECTION, BLOCK AND GRAVEL INLET PROTECTION, ROCK DOUGHNUT INLET PROTECTION AND ROCK PIPE INLET PROTECTION WHEN THE DESIGNED STORAGE CAPACITY HAS BEEN HALF FILLED WITH SEDIMENT. ROCK WILL BE CLEANED OR REPLACED WHEN THE SEDIMENT POOL NO LONGER DRAINS AS DESIGNED. DEBRIS WILL BE REMOVED FROM THE ROCK AND HARDWARE CLOTH TO ALLOW PROPER DRAINAGE. SILT SACKS WILL BE EMPTIED ONCE A WEEK AND AFTER EVERY RAIN EVENT. SEDIMENT WILL BE REMOVED FROM AROUND WATTLES, BEAVER DAMS, DANDY SACKS AND SOCKS ONCE A WEEK AND AFTER EVERY RAIN EVENT.

4. DIVERSION DITCHES WILL BE CLEANED OUT IMMEDIATELY TO REMOVE SEDIMENT OR OBSTRUCTIONS FROM THE FLOW AREA. THE DIVERSION RIDGES WILL ALSO BE REPAIRED. SWALES MUST BE TEMPORARILY STABILIZED WITHIN 21 CALENDAR DAYS OF CEASE OF ANY PHASE OF ACTIVITY ASSOCIATED WITH A SWALE.

5. SEDIMENT WILL BE REMOVED FROM BEHIND THE SEDIMENT FENCE WHEN IT BECOMES HALF FILLED. THE SEDIMENT FENCE WILL BE REPAIRED AS NECESSARY TO MAINTAIN A BARRIER. STAKES MUST BE STEEL. STAKE SPACING WILL BE 6 FEET MAX. WITH THE USE OF EXTRA STRENGTH FABRIC, WITHOUT WIRE BACKING. STAKE SPACING WILL BE 8 FEET MAX. WHEN STANDARD STRENGTH FABRIC AND WIRE BACKING ARE USED. IF ROCK FILTERS ARE DESIGNED AT LOW POINTS IN THE SEDIMENT FENCE, THE ROCK WILL BE REPAIRED OR REPLACED IF IT BECOMES HALF-FULL OF SEDIMENT, NO LONGER DRAINS AS DESIGNED OR IS DAMAGED.

6. SEDIMENT WILL BE REMOVED FROM SEDIMENT TRAPS WHEN THE DESIGNED STORAGE CAPACITY HAS BEEN HALF FILLED WITH SEDIMENT. THE ROCK WILL BE CLEANED OR REPLACED WHEN THE SEDIMENT POOL NO LONGER DRAINS OR WHEN THE ROCK IS DISLODGED. BAFFLES WILL BE REPAIRED OR REPLACED IF THEY COLLAPSE, TEAR, DECOMPOSE OR BECOME INEFFECTIVE. THEY WILL BE REPLACED PROMPTLY. SEDIMENT WILL BE REMOVED WHEN DEPOSITS REACH HALF THE HEIGHT OF THE 1ST BAFFLE. FLOATING SKIMMERS WILL BE INSPECTED AND KEPT CLEAN WEEKLY.

7. SEDIMENT WILL BE REMOVED FROM THE SEDIMENT BASIN WHEN THE DESIGN STORAGE CAPACITY HAS BEEN HALF FILLED WITH SEDIMENT. ROCK WILL BE CLEANED OR REPLACED WHEN THE SEDIMENT POOL NO LONGER DRAINS OR IF THE ROCK IS DISLODGED. BAFFLES WILL BE REPAIRED OR REPLACED IF THEY COLLAPSE, TEAR, DECOMPOSE OR BECOME INEFFECTIVE. THEY WILL BE REPLACED PROMPTLY. SEDIMENT WILL BE REMOVED FROM BAFFLES WHEN DEPOSITS REACH HALF THE HEIGHT OF THE 1ST BAFFLE. FLOATING SKIMMERS WILL BE INSPECTED WEEKLY AND WILL BE KEPT CLEAN.

8. LAND QUALITY REQUIRES:
ALL SEEDED AREAS WILL BE FERTILIZED, RESEEDED AS NECESSARY, AND MULCHED, ACCORDING TO SPECIFICATIONS IN THE VEGETATIVE PLAN, TO MAINTAIN A VIGOROUS, DENSE VEGETATIVE COVER. ALL SLOPES WILL BE STABILIZED WITHIN 21 CALENDAR DAYS. ALL OTHER AREAS WILL BE STABILIZED WITHIN 15 WORKING DAYS.
WATER QUALITY REQUIRES:
ALL SEEDED AREAS WILL BE FERTILIZED, RESEEDED AS NECESSARY AND MULCHED ACCORDING TO SPECIFICATIONS IN THE VEGETATIVE PLAN TO MAINTAIN A VIGOROUS, DENSE VEGETATIVE COVER. ALL PERIMETER DIKES, SWALES, DITCHES, PERIMETER SLOPES, ALL SLOPES STEEPER THAN 3' HORIZONTAL TO 1' VERTICAL (3:1) AND ALL HIGH QUALITY WATER (HQW) ZONES SHALL BE PROVIDED TEMPORARY OR PERMANENT STABILIZATION WITH GROUND COVER AS SOON AS PRACTICABLE BUT IN ANY EVENT WITHIN SEVEN (7) CALENDAR DAYS FROM THE LAST LAND-DISTURBING ACTIVITY. ALL OTHER DISTURBED AREAS SHALL BE PROVIDED TEMPORARY OR PERMANENT STABILIZATION WITH GROUND COVER AS SOON AS PRACTICABLE BUT IN ANY EVENT WITHIN FOURTEEN (14) CALENDAR DAYS FROM THE LAST LAND-DISTURBING ACTIVITY.

9. FLOCCULANTS WILL BE USED TO ADDRESS TURBIDITY ISSUES. THE PUMPS, TANKS, HOSES AND INJECT SYSTEMS WILL BE CHECKED FOR PROBLEMS OR TURBID DISCHARGES DAILY.

10. BASIN OUTLET STRUCTURES AND SKIMMERS SHALL WITHDRAW WATER FROM THE SURFACE.

SITE WORK NOTES:

1. THE CONTRACTOR SHALL VISIT THE SITE TO BECOME FAMILIAR WITH FIELD CONSTRUCTION CONDITIONS.

2. CONTRACTOR SHALL COORDINATE WORK WITHIN NCDOT AND LOCAL RIGHT OF WAYS WITH PROPER AUTHORITIES AND SHALL MEET ANY REQUIREMENTS AS TO TRAFFIC CONTROL AND CONNECTION TO EXISTING STREETS.

3. CLEARING AND GRUBBING: REMOVE ALL TREES AS REQUIRED UNLESS OTHERWISE NOTED TO REMAIN, STUMPS, ROOTS, SHRUBBERY, ASPHALT, CONCRETE, STRUCTURES, BURIED UTILITIES, STORAGE TANKS, ETC. WITHIN LIMITS OF CONSTRUCTION.

4. STRIPPING: BEFORE EXCAVATING OR FILLING, REMOVE ALL TOPSOIL, WOOD, LEAVES, AND ANY OTHER UNSUITABLE MATERIAL.

5. MUCKING: REMOVE ANY SOFT, ORGANIC SILT MATERIALS AND EXISTING BURIED CONSTRUCTION DEBRIS AS REQUIRED AND FILL TO SUBGRADE ELEVATIONS WITH A CLEAN SELECT-FILL COMPACTED AS SPECIFIED.

6. DISPOSAL: CLEARED, GRUBBED, STRIPPED OR EXCAVATED SPOIL SHALL BE REMOVED FROM SITE AND DISPOSED OF IN ACCORDANCE WITH ALL APPLICABLE LOCAL AND STATE CODES.

7. BORROW MATERIAL: THE CONTRACTOR SHALL FURNISH BORROW MATERIAL REQUIRED FROM OFF SITE AND OBTAIN ALL REQUIRED PERMITS ASSOCIATED WITH BORROW OPERATIONS.

8. FILL AND COMPACTION: AFTER STRIPPING THOSE AREAS DESIGNATED TO RECEIVE FILL SHOULD BE PROOFROLLED. THE TOP 8" OF SUBGRADE SHALL BE COMPACTED TO AT LEAST 98% OF MAXIMUM DENSITY AT OPTIMUM MOISTURE CONTENT. ANY AREA WHICH PUMPS OR RUTS EXCESSIVELY SHOULD BE UNDERCUT AND REPLACED WITH A CLEAN, SILTY OR CLAYEY SAND HAVING A UNIFIED SOIL CLASSIFICATION OF SP, SM, OR SC. FILL MATERIAL 5" OUTSIDE OF BUILDING AREAS SHALL THEN BE PLACED IN LAYERS NOT TO EXCEED 8" AND COMPACTED TO AT LEAST 95% OF THE STANDARD PROCTOR MAXIMUM DRY DENSITY (ASTM D-698) WITH THE UPPER 12 INCHES OF SUBGRADE BEING COMPACTED TO 98% OF THE STANDARD PROCTOR MAXIMUM DRY DENSITY. FILL MATERIALS WITHIN BUILDING AREAS TO A LINE OUTSIDE THE BUILDING AREAS SHALL BE PLACED IN LAYERS NOT TO EXCEED 8" AND COMPACTED TO AT LEAST 98% OF THE STANDARD PROCTOR MAXIMUM DRY DENSITY (ASTM D-698) WITH THE UPPER 12 INCHES OF SUBGRADE BEING COMPACTED IN 6 INCH LAYERS TO 100% OF THE STANDARD PROCTOR MAXIMUM DRY DENSITY. IN AREAS WHERE NO STRUCTURAL FILL IS TO BE PLACED THE UPPER 12 INCHES OF IN-PLACE SUBGRADE SHOULD BE COMPACTED TO AT LEAST 98% OF THE STANDARD PROCTOR MAXIMUM DRY DENSITY. IF THE MATERIAL IS TOO DRY TO COMPACT TO THE REQUIRED DENSITY EACH LAYER SHALL BE WETTED IN ACCORDANCE WITH COMPACTION REQUIREMENTS. IF THE MATERIAL IS TOO WET TO SECURE PROPER COMPACTION, IT SHALL BE HARROWED REPEATEDLY OR OTHERWISE AERATED WITH SUITABLE EQUIPMENT UNTIL OPTIMUM MOISTURE CONTENT IS OBTAINED. FILL SHALL BE PLACED IN SUCH A MANNER THAT THE SURFACE WILL DRAIN READILY AT ALL TIMES. SEE STRUCTURAL NOTES AND SOILS REPORT FOR ADDITIONAL REQUIREMENTS.

9. LAYOUT: THE CONTRACTOR SHALL PROVIDE ALL LAYOUT REQUIRED TO CONSTRUCT HIS WORK.

10. THE CONTRACTOR IS RESPONSIBLE FOR THE LOCATION AND PROTECTION OF EXISTING UTILITIES DURING CONSTRUCTION.

11. EXISTING BOUNDARY AND TOPOGRAPHIC INFORMATION FROM SURVEY BY MICHAEL UNDERWOOD AND ASSOC. PA AND PROVIDED BY OWNER.

12. THE CONTRACTOR SHALL VERIFY DIMENSIONS AT JOBSITE.

13. THE CONTRACTOR IS RESPONSIBLE FOR THE COORDINATION OF RELOCATION OR DISCONNECTION OF ALL EXISTING UTILITIES WITH APPLICABLE AGENCIES AND AUTHORITIES.

14. ALL PAVEMENT AND BASE MATERIALS AND WORKMANSHIP SHALL CONFORM TO NCDOT STANDARDS.

15. WATER AND SEWER SERVICES SHALL BE INSTALLED TO MEET LOCAL AND STATE PLUMBING CODES. METER AND TAPS SHALL MEET ALL LOCAL REQUIREMENTS.

16. ALL AREAS SHALL BE GRADED FOR POSITIVE DRAINAGE.

17. SEE SOILS REPORT FOR ADDITIONAL REQUIREMENTS.

18. CONTRACTOR SHALL NOTE THAT EARTHWORK QUANTITIES ARE HIS RESPONSIBILITY. PLANS DO NOT REPRESENT A BALANCED EARTHWORK CONDITION.

19. REINF. CONC. PIPE SHALL BE CLASS III W/RUBBER GASKETED JOINT OR "RAM NECK". INSTALL PER MANUFACTURER'S REQUIREMENTS.

20. USE WHITE LANE MARKING PAINT FOR ALL PAVEMENT MARKINGS. PAINT SHALL BE A CHLORINATED RUBBER ALKYD, FS TT-P-115, TYPE III, FACTORY MIXED, QUICK DRYING, NON-BLEEDING.

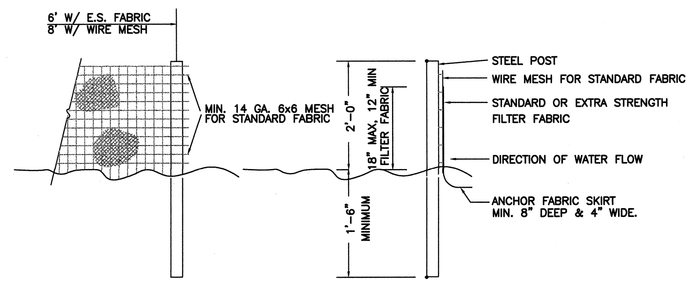

NOTES:

1. SYN. FENCE FABRIC SHALL BE MIN. OF 30" IN WIDTH WITH 30 LB/IN TENSILE STRENGTH FOR STANDARD FABRIC AND 50 LB/IN FOR EXTRA STRENGTH.
2. FABRIC SHALL BE CONTINUOUS LENGTH. IF JOINTS ARE NECESSARY, LAP FABRIC POST TO POST.
3. STEEL POST SHALL BE MIN 4' IN HEIGHT AND BE OF THE SELF-FASTENER STEEL ANGLE TYPE.

NOT TO SCALE

4 TEMPORARY SILT FENCE

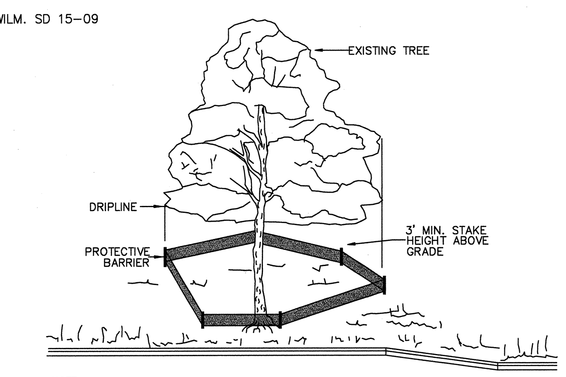

NOTE:
1. TREES TO BE SAVED WILL BE CLEARLY MARKED PRIOR TO CONSTRUCTION AND A PROTECTIVE BARRIER IS TO BE INSTALLED AT THE DRIPLINE.

2. DRIP LINE – THE AREA OF SOIL DIRECTLY BENEATH THE TREE EXTENDING OUT TO THE TIPS OF THE OUTERMOST BRANCHES.

3. SIGNAGE STATING "TREE PROTECTION ZONE DO NOT ENTER" IN ENGLISH SHALL BE ATTACHED TO FENCING AND PLACED AT 50' INTERVALS WITH A MINIMUM OF TWO SIGNS PER TREE PROTECTION AREA.

NOT TO SCALE

CITY OF WILM. SD 15-08

5 METHOD OF TREE PROTECTION

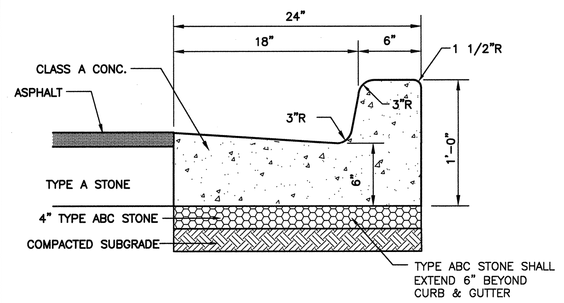

NOTE: CURB TYPE DEPENDS ON GRADES SHOWN ON GRADING PLAN. GRADES INDICATING FALL AWAY FROM CURB SHALL BE SPILL OFF TYPE CURB. GRADES INDICATING CURB ACCEPTING FLOW SHALL BE FLOW LINE TYPE.

NOT TO SCALE

6 24" CURB AND GUTTER SECTION (FLOW-LINE)

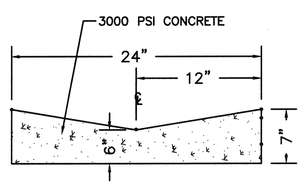

7 24" VALLEY GUTTER

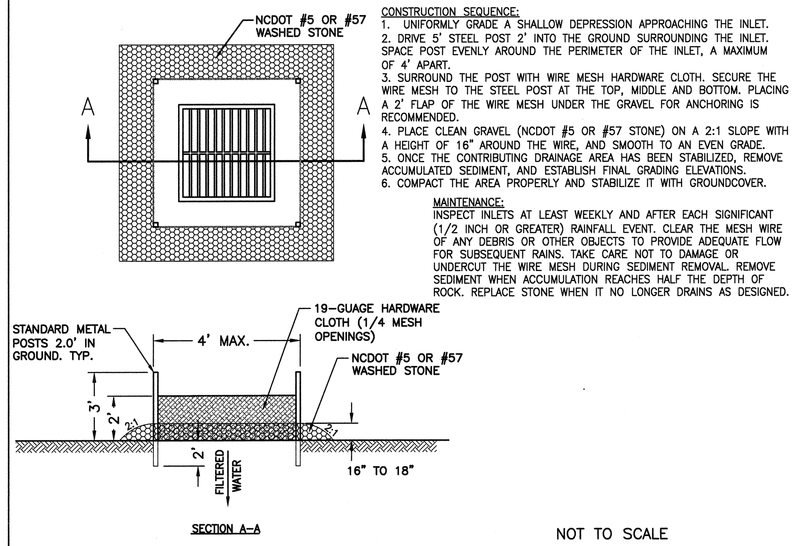

CONSTRUCTION SEQUENCE:
1. UNIFORMLY GRADE A SHALLOW DEPRESSION APPROACHING THE INLET.
2. DRIVE 5' STEEL POST 2' INTO THE GROUND SURROUNDING THE INLET. SPACE POST EVENLY AROUND THE PERIMETER OF THE INLET, A MAXIMUM OF 4' APART.
3. SURROUND THE POST WITH WIRE MESH HARDWARE CLOTH. SECURE THE WIRE MESH TO THE STEEL POST AT THE TOP, MIDDLE AND BOTTOM. PLACING A 2' FLAP OF THE WIRE MESH UNDER THE GRAVEL FOR ANCHORING IS RECOMMENDED.
4. PLACE CLEAN GRAVEL (NCDOT #5 OR #57 STONE) ON A 2:1 SLOPE WITH A HEIGHT OF 16" AROUND THE WIRE, AND SMOOTH TO AN EVEN GRADE.
5. ONCE THE CONTRIBUTING DRAINAGE AREA HAS BEEN STABILIZED, REMOVE ACCUMULATED SEDIMENT, AND ESTABLISH FINAL GRADING ELEVATIONS.
6. COMPACT THE AREA PROPERLY AND STABILIZE IT WITH GROUNDCOVER.

MAINTENANCE:
INSPECT INLETS AT LEAST WEEKLY AND AFTER EACH SIGNIFICANT (1/2 INCH OR GREATER) RAINFALL EVENT. CLEAR THE MESH WIRE OF ANY DEBRIS OR OTHER OBJECTS TO PROVIDE ADEQUATE FLOW FOR SUBSEQUENT RAINS. TAKE CARE NOT TO DAMAGE OR UNDERCUT THE WIRE MESH DURING SEDIMENT REMOVAL. REMOVE SEDIMENT WHEN ACCUMULATION REACHES HALF THE DEPTH OF ROCK. REPLACE STONE WHEN IT NO LONGER DRAINS AS DESIGNED.

NOT TO SCALE

8 HARDWARE CLOTH AND GRAVEL INLET PROTECTION

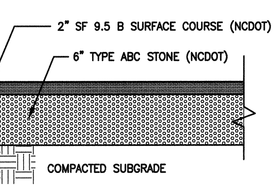

NOTE: PAVEMENT SECTION MAY VARY DEPENDING UPON FIELD CONDITIONS. CONTRACTOR SHALL COORDINATE W/OWNER & GEOTECHNICAL ENGINEER TO DETERMINE ACTUAL PAVEMENT SECTION.

NOT TO SCALE

9 ASPHALT PAVEMENT SECTION

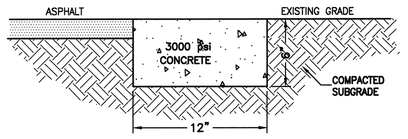

10 HEADER CURB

TEMPORARY/PERMANENT GRASS SPECIFICATION:

1. CHISEL COMPACTED AREAS AND SPREAD TOPSOIL 3 INCHES DEEP OVER ADVERSE SOIL CONDITIONS.

2. RIP THE ENTIRE AREA TO A 6 INCH DEPTH.

3. REMOVE ALL ROCKS, ROOTS AND OTHER OBSTRUCTIONS LEAVING SURFACES SMOOTH AND UNIFORM.

4. APPLY AGRICULTURAL LIME AND FERTILIZER UNIFORMLY AND MIX WITH SOIL.
LIME: 45 LBS. PER 1000 S.F.
PHOSPHOROUS: 20 LBS PER 1000 S.F.
FERTILIZER: 17 LBS. PER 1000 S.F.

5. CONTINUE TILLAGE UNTIL A WELL PULVERIZED, FIRM, UNIFORM SEED BED IS PREPARED 4-6 INCHES DEEP.

6. SEED ON A FRESHLY PREPARED SEED BED AND COVER SEED LIGHTLY. 2 – 3 LBS PER 1000 S.F. (SEE MIXTURE BELOW)

7. MULCH IMMEDIATELY AFTER SEEDING AND ANCHOR MULCH.
GRAIN STRAW & HAY AT 75 TO 100 LBS PER 1000 S.F.
WOOD CHIPS AT 500 LBS. PER 1000 S.F.
JUTE & MESH AS PER MANUFACTURER

8. ASPHALT FOR ANCHORING MULCH SHALL BE TYPE SS-1 EMULSION AND APPLIED AT A RATE OF 1000 GAL. PER ACRE FOR SLOPE STABILIZATION, AND 150 GAL. PER TON OF STRAW FOR ANCHORING STRAW.

9. INSPECT ALL SEEDED AREAS AND MAKE NECESSARY REPAIRS OR RESEED WITHIN THE PLANTING SEASON, IF POSSIBLE. IF GRASS STAND SHOULD BE OVER 60% DAMAGED, REESTABLISH FOLLOWING ORIGINAL LIME, FERTILIZER AND SEEDING RATES.

10. CONSULT CONSERVATION INSPECTOR ON MAINTENANCE, TREATMENT, AND FERTILIZATION AFTER PERMANENT COVER IS ESTABLISHED.

11. SEED FOR TEMPORARY AND PERMANENT APPLICATIONS SHALL BE:

20%	CARPET GRASS
28%	BERMUDA GRASS
20%	TURF FESCUE
10%	CREEPING RED FESCUE
20%	ANNUAL RYE GRAIN

*BERMUDA SEED SHALL BE HULLED FOR WARM WEATHER PLANTING. PURITY OF SEED SHALL BE A MIN. OF 98% AND GERMINATION SHALL BE A MIN. OF 85%.

ALL DISTURBED AREA SHALL BE SEEDED WITHIN 7-14 DAYS OF THE COMPLETION OF GRADING. SEE EROSION CONTROL AND MAINTENANCE NOTES. CONSULT CONSERVATION ENGINEER OR SOIL CONSERVATION SERVICE FOR ADDITIONAL INFORMATION CONCERNING OTHER ALTERNATIVES FOR VEGETATION OF DENUDED AREAS. THE ABOVE VEGETATION RATES ARE THOSE WHICH DO WELL UNDER LOCAL CONDITIONS, OTHER SEEDING SCHEDULES MAY BE POSSIBLE.

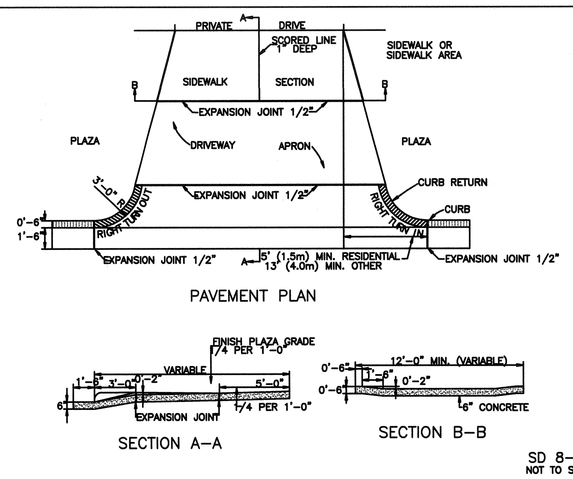

SD 8-02
NOT TO SCALE

11 STANDARD CITY OF WILMINGTON DRIVE WAY DETAIL

NOTES:
1. SIDEWALK THICKNESS SHALL BE 4" UNLESS NOTED OTHERWISE.
2. CONTRACTION JOINTS (C.J.) SPACE SAME AS SIDEWALK WIDTH UNLESS OTHERWISE NOTED ON PLANS.
3. THICKEN SIDEWALK TO 6" AT DRIVEWAYS.
4. THICKEN SIDEWALK TO 6" IN LAST 3' WHERE IT ABUTS PAVEMENT WITH NO CURB.
5. 1/2" EXPANSION JOINT (E.J.) AND SNAP CAP EXPANSION JOINT COVERS ARE REQUIRED AT 50' MAX. AT SIDEWALK JUNCTIONS, AT STRUCTURES, AND AS NOTED ON SITE PLAN. 6. PROVIDE A LAYER OF 15# BLDG. FELT BETWEEN WALK AND ADJACENT PARALLELING CURB OR STRUCTURE.

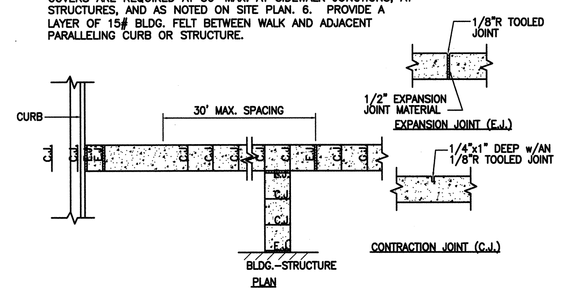

NOT TO SCALE

12 SIDEWALK JOINT DETAIL

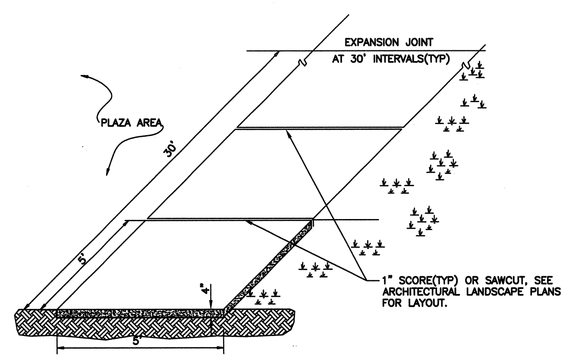

NOT TO SCALE

13 STANDARD SIDEWALK DETAIL

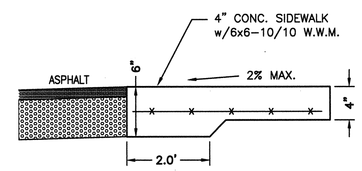

14 TURN DOWN WALK SECTION

CALL 811 (3) WORKING DAYS BEFORE YOU DIG.

For each open utility cut of City streets, a $325 permit shall be required from the City prior to occupancy and/or project acceptance.

CITY OF WILMINGTON NORTH CAROLINA
Public Services • Engineering Division
APPROVED STORMWATER MANAGEMENT PLAN
Date:_____ Permit #_____
Signed: _____

Approved Construction Plan

	Name	Date
Planning		
Traffic		
Fire		

SYMBOL	DATE	DESCRIPTION	BY

REVISIONS

© 2014 NORRIS & TUNSTALL

NEW HANOVER COUNTY
ABC FACILITY RENOVATIONS

NORRIS & TUNSTALL
CONSULTING ENGINEERS, P.C.
902 MARKET STREET
WILMINGTON, NC 28401
PHONE (910) 343-9653
FAX (910) 343-9604
office@nktseng.com
licence #C-3641

CONSTRUCTION DOCUMENTS

LS3P

LS3P ASSOCIATES LTD.
2528 INDEPENDENCE BLVD. SUITE 200
WILMINGTON, NORTH CAROLINA 28412
TEL. 910.790.9901 FAX 910.790.3111
WWW.LS3P.COM

PRELIMINARY

MEMBERS OF THE AMERICAN INSTITUTE OF ARCHITECTS

COPYRIGHT 2015 ALL RIGHTS RESERVED PRINTED OR ELECTRONIC DRAWINGS AND DOCUMENTATION MAY NOT BE REPRODUCED IN ANY FORM WITHOUT WRITTEN PERMISSION FROM LS3P ASSOCIATES LTD.

REVISIONS:

PROJECT: 7101-141210
DATE: 04/01/15
DRAWN BY: NKS
CHECKED BY: JST

NOTES AND DETAILS

C-6

NT JOB #14105

SOLUTIONS THROUGH LISTENING
SERVICE BY DESIGN

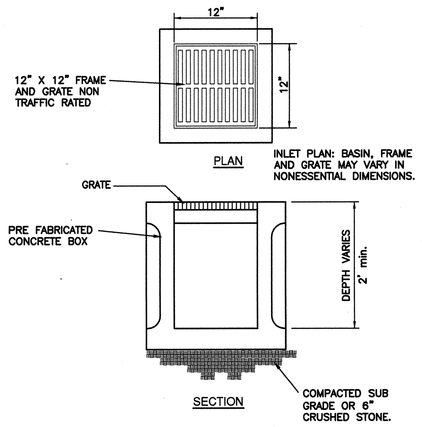

NOT TO SCALE

1 YARD INLET DETAIL

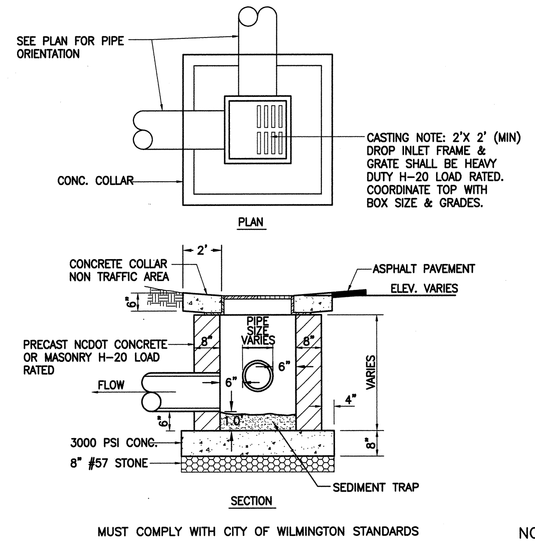

MUST COMPLY WITH CITY OF WILMINGTON STANDARDS

NOT TO SCALE

2 DROP INLET DETAIL

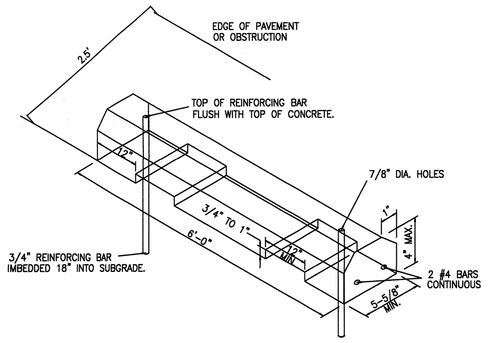

NOT TO SCALE

3 CONCRETE WHEEL STOP

4

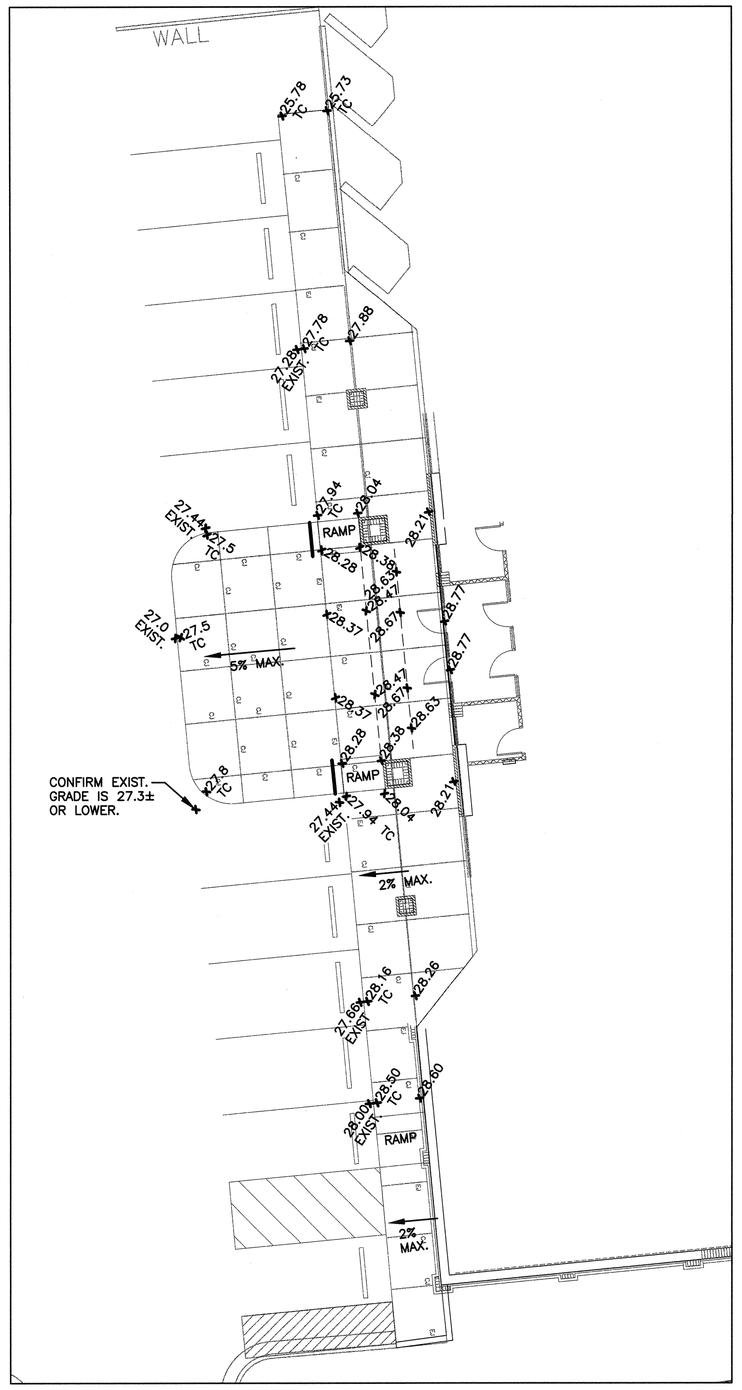

SCALE: 1"=10'

7 SPOT ELEVATION DETAIL

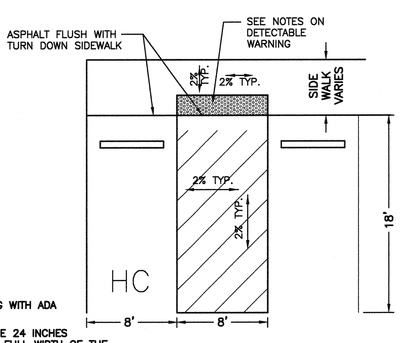

NOTE:

1. RAMP SHALL HAVE A DETECTABLE WARNING COMPLYING WITH ADA GUIDELINES:

2. THE DETECTABLE WARNINGS AT CURB RAMPS SHALL BE 24 INCHES MINIMUM IN THE DIRECTION OF TRAVEL AND EXTEND THE FULL WIDTH OF THE CURB RAMP OR FLUSH SURFACE.

3. MARKED CROSSINGS THAT ARE RAISED TO THE SAME LEVEL AS THE ADJOINING SIDEWALK SHALL BE PRECEDED BY A 24 INCH DEEP DETECTABLE WARNING EXTENDING THE FULL WIDTH OF THE MARKED CROSSING.

4. DETECTABLE WARNINGS SHALL CONSIST OF RAISED TRUNCATED DOMES WITH A DIAMETER OF NOMINAL 0.9 IN (23 MM), A HEIGHT OF NOMINAL 0.2 IN (5 MM) AND A CENTER-TO-CENTER SPACING OF NOMINAL 2.35 IN (60 MM) AND SHALL CONTRAST VISUALLY WITH ADJOINING SURFACES, EITHER LIGHT-ON-DARK, OR DARK-ON-LIGHT. THE MATERIAL USED TO PROVIDE CONTRAST SHOULD CONTRAST BY AT LEAST 70% – REFER TO ADA GUIDELINES FOR DEFINITION OF "CONTRAST".

5. THE MATERIAL USED TO PROVIDE CONTRAST SHALL BE AN INTEGRAL PART OF THE WALKING SURFACE. DETECTABLE WARNINGS USED ON INTERIOR SURFACES SHALL DIFFER FROM ADJOINING WALKING SURFACES IN RESILIENCY OR SOUND-ON-CANE CONTACT.

NOT TO SCALE

6 HC RAMP

5

8

9

10

CITY OF WILMINGTON STANDARD NOTES:

1. CONTACT THE NORTH CAROLINA ONE CALL CENTER PRIOR TO DOING ANY DIGGING AT 1-800-632-4949.

2. PRIOR TO ANY CLEARING, GRADING OR CONSTRUCTION ACTIVITY, TREE PROTECTION FENCING WILL BE INSTALLED AROUND PROTECTED TREES OR GROVES OF TREES AND NO CONSTRUCTION WORKERS, TOOLS, MATERIALS, OR VEHICLES ARE PERMITTED WITHIN THE TREE PROTECTION FENCING.

3. ALL PAVEMENT MARKINGS IN PUBLIC RIGHTS-OF-WAY AND FOR DRIVEWAYS ARE TO BE THERMOPLASTIC AND MEET CITY AND/OR NCDOT STANDARDS.

4. ALL PARKING STALL MARKINGS AND LANE ARROWS WITHIN THE PARKING AREAS SHALL BE WHITE.

5. INSTALL REFLECTORS PER CITY AND NCDOT STANDARDS. TRAFFIC ENGINEERING MUST APPROVE OF PAVEMENT MARKING LAYOUT PRIOR TO ACTUAL STRIPING.

6. ALL TRAFFIC CONTROL SIGNS AND MARKINGS OFF THE RIGHT-OF-WAY ARE TO BE MAINTAINED BY THE PROPERTY OWNER IN ACCORDANCE WITH MUTCD STANDARDS.

7. TRAFFIC CONTROL DEVICES (INCLUDING SIGNS AND PAVEMENT MARKINGS) IN AREAS OPEN TO PUBLIC TRAFFIC ARE TO MEET MUTCD (MANUAL ON UNIFORM TRAFFIC CONTROL DEVICES) STANDARDS.

8. IT SHALL BE THE RESPONSIBILITY OF THE SUBDIVIDER TO ERECT OFFICIAL STREET NAME SIGNS AT ALL INTERSECTIONS ASSOCIATED WITH THE SUBDIVISION IN ACCORDANCE WITH THE TECHNICAL STANDARDS AND SPECIFICATIONS MANUAL. THE SUBDIVIDER MAY ACQUIRE AND ERECT OFFICIAL STREET NAME SIGNS OR MAY CHOOSE TO CONTRACT WITH THE CITY TO INSTALL THE STREET SIGNS AND THE SUBDIVIDER SHALL PAY THE COST OF SUCH INSTALLATION. CONTACT TRAFFIC ENGINEERING AT 341-7888 TO DISCUSS INSTALLATION OF TRAFFIC AND STREET NAME SIGNS. POSTED STREET NAMES MUST BE APPROVED PRIOR TO INSTALLATION OF STREET NAME SIGNS.

9. CONTACT TRAFFIC ENGINEERING AT 341-7888 FORTY-EIGHT HOURS PRIOR TO ANY EXCAVATION IN THE RIGHT-OF-WAY.

10. A UTILITY CUT PERMIT IS REQUIRED FOR EACH OPEN CUT OF A CITY STREET. CONTACT 341-5888 FOR MORE DETAILS. IN CERTAIN CASES AN ENTIRE RESURFACING OF THE AREA BEING OPEN CUT MAY BE REQUIRED.

11. ANY BROKEN OR MISSING SIDEWALK PANELS, DRIVEWAY PANELS, AND CURBING WILL BE REPLACED.

12. CONTACT KAREN DIXON AT 341-7888 TO DISCUSS STREET LIGHTING OPTIONS.

13. PROJECT SHALL COMPLY WITH CFPUA CROSS CONNECTION CONTROL REQUIREMENTS. WATER METER(S) CANNOT BE RELEASED UNTIL ALL REQUIREMENTS ARE MET AND THE STATE HAS GIVEN THEIR FINAL APPROVAL. CALL 343-3910 FOR INFORMATION.

14. IF THE CONTRACTOR DESIRES CFPUA WATER FOR CONSTRUCTION HE SHALL APPLY IN ADVANCE FOR THIS SERVICE AND MUST PROVIDE A REDUCED PRESSURE ZONE (RPZ) BACKFLOW PREVENTION DEVICE ON THE DEVELOPER'S SIDE OF THE WATER METER BOX.

15. ANY IRRIGATION SYSTEM SUPPLIED BY CFPUA WATER SHALL COMPLY WITH CFPUA CROSS CONNECTION CONTROL REGULATIONS. CALL 332-6558 FOR INFORMATION.

16. ANY BACKFLOW PREVENTION DEVICES REQUIRED BY CFPUA WILL NEED TO BE ON THE LIST OF APPROVED DEVICES BY USCFCCCHR OR ASSE.

17. WHEN PVC WATER MAINS AND/OR POLYETHYLENE SERVICES ARE PROPOSED, THE PIPES ARE TO BE MARKED WITH NO. 10 INSULATED SINGLE STRAND COPPER WIRE INSTALLED THE ENTIRE LENGTH AND SECURED TO ALL VALVES. THIS WIRE IS TO BE ACCESSIBLE AT ALL FIRE HYDRANTS AND WATER METER BOXES TO AID IN FUTURE LOCATION OF FACILITIES.

18. THE NUMBER AND SPACING OF DRIVEWAYS FOR ALL INTERCONNECTED SITES WILL BE DETERMINED BY THE COMBINED FRONTAGE OF THE INTERCONNECTED PROPERTIES.

19. UNDERGROUND FIRE LINE MUST BE PERMITTED AND INSPECTED BY THE WILMINGTON FIRE DEPARTMENT FROM THE PUBLIC ROW TO THE BUILDING. CONTACT THE WILMINGTON FIRE DEPARTMENT DIVISION OF FIRE AND LIFE SAFETY AT 910-343-0696 FOR ADDITIONAL INFORMATION.

20. A LANDSCAPE PLAN INDICATING THE LOCATION OF REQUIRED STREET TREES SHALL BE SUBMITTED TO THE CITY OF WILMINGTON TRAFFIC ENGINEER DIVISION AND PARKS AND RECREATIN DEPARTMENT FOR REVIEW AND APPROVAL PRIOR TO THE RECORDING OF THE FINAL PLAT.

CALL 811 (3) WORKING DAYS BEFORE YOU DIG.

For each open utility cut of City streets, a $325 permit shall be required from the City prior to occupancy and/or project acceptance.

CITY OF WILMINGTON NORTH CAROLINA
Public Services • Engineering Division
APPROVED STORMWATER MANAGEMENT PLAN
Date:_____ Permit #_____
Signed: _____

Approved Construction Plan

	Name	Date
Planning		
Traffic		
Fire		

SYMBOL	DATE	DESCRIPTION	BY

REVISIONS

© 2014 NORRIS & TUNSTALL

NEW HANOVER COUNTY ABC FACILITY RENOVATIONS

NORRIS & TUNSTALL
CONSULTING ENGINEERS, P.C.
902 MARKET STREET
WILMINGTON, NC 28401
PHONE (910) 343-9653
FAX (910) 343-9604
office@nktenq.com
licence #C-3641

CONSTRUCTION DOCUMENTS

LS3P

LS3P ASSOCIATES LTD.
2528 INDEPENDENCE BLVD. SUITE 200
WILMINGTON, NORTH CAROLINA 28412
TEL. 910.790.9901 FAX 910.790.3111
WWW.LS3P.COM

NORTH CAROLINA PROFESSIONAL SEAL 19031 ENGINEER JOHN S. TUNSTALL

PRELIMINARY

MEMBERS OF THE AMERICAN INSTITUTE OF ARCHITECTS

COPYRIGHT 2015 ALL RIGHTS RESERVED
PRINTED OR ELECTRONIC DRAWINGS AND DOCUMENTATION MAY NOT BE REPRODUCED IN ANY FORM WITHOUT WRITTEN PERMISSION FROM LS3P ASSOCIATES LTD.

REVISIONS:

PROJECT: 7101-141210
DATE: 04/01/15
DRAWN BY: NKS
CHECKED BY: JST

NOTES AND DETAILS

C-7

NT JOB #14105

SOLUTIONS THROUGH LISTENING
SERVICE BY DESIGN

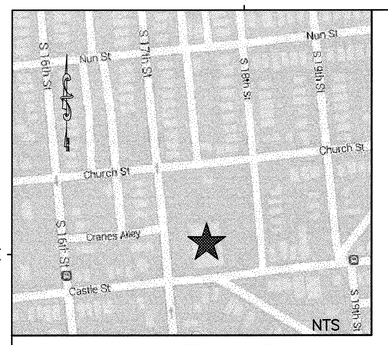

VICINITY MAP

INVENTORY SITE DATA

USE:	RETAIL SALES (ALCOHOL)
PROPERTY OWNER:	NEW HANOVER COUNTY ALCOHOLIC BOARD
EXISTING PARCEL (A) ID#:	R05407-028-006-000
EXISTING MAP ID# (A):	312710.46.5473.000
SITE ADDRESS (A):	523 S. 17TH STREET
CURRENT ZONING (A):	UMX-URBAN MIXED USE
EXISTING PARCEL (B) ID#:	R05407-028-009-000
EXISTING MAP ID# (B):	312710.46.7510.000
SITE ADDRESS (B):	510 S. 18TH STREET
CURRENT ZONING (B):	UMX-URBAN MIXED USE
EXISTING PARCEL (C) ID#:	R05407-028-007-000
EXISTING MAP ID# (C):	312710.46.6399.000
SITE ADDRESS (C):	CASTLE STREET
CURRENT ZONING (C):	UMX-URBAN MIXED USE
EXISTING PARCEL (D) ID#:	R05407-028-008-000
EXISTING MAP ID# (D):	312710.46.7440.000
SITE ADDRESS (D):	1711 CASTLE STREET
CURRENT ZONING (D):	UMX-URBAN MIXED USE
PARCEL AREA:	
EXISTING PARCEL AREA (A):	0.93 AC (40,511 SF)
EXISTING PARCEL AREA (B):	0.21 AC (9,235 SF)
EXISTING PARCEL AREA (C):	0.09 AC (4,130 SF)
EXISTING PARCEL AREA (D):	0.22 AC (9,440 SF)
SOIL TYPES:	Lo
CAMA LAND USE:	URBAN
SITE DOES NOT LIE WITHIN 100 YEAR FLOOD PLAIN	
NO CAMA AEC OR SETBACKS	
HISTORICAL SITE:	NONE
CEMETERY:	NONE
FORESTED AREA:	SEE PLAN FOR TREE SURVEY
WETLANDS:	NONE EXIST WITHIN SITE AREA
ENDANGERED SPECIES/HABITAT:	NONE REPORTED

For each open utility cut of City streets, a $325 permit shall be required from the City prior to occupancy and/or project acceptance.

CITY OF WILMINGTON NORTH CAROLINA
Public Services • Engineering Division
STORMWATER MANAGEMENT PLAN
Date:_____ Permit #_____
Signed: _____

Approved Construction Plan

	Name	Date
Planning		
Traffic		
Fire		

NCDENR PWSS WATER PERMIT #:	
WATER CAPACITY:	GPD
DWQ SEWER PERMIT #:	
SEWER CAPACITY:	GPD
SEWER SHED # AND PLANT:	
SEWER TO FLOW THROUGH NEI:	YES or NO (CIRCLE ONE)

SCALE: 1" = 20'
0 20 40 60

NEW HANOVER COUNTY ABC FACILITY RENOVATIONS

NORRIS & TUNSTALL CONSULTING ENGINEERS, P.C.
902 MARKET STREET
WILMINGTON, NC 28401
PHONE (910) 343-9653
FAX (910) 343-9604
office@nkteng.com
licence #C-3641

CONSTRUCTION DOCUMENTS

LS3P

LS3P ASSOCIATES LTD.
2528 INDEPENDENCE BLVD. SUITE 200
WILMINGTON, NORTH CAROLINA 28412
TEL. 910.790.9901 FAX 910.790.3111
WWW.LS3P.COM

PRELIMINARY

NORTH CAROLINA PROFESSIONAL ENGINEER SEAL 19631 JOHN S. TUNSTALL IV

MEMBERS OF THE AMERICAN INSTITUTE OF ARCHITECTS

COPYRIGHT 2015 ALL RIGHTS RESERVED
PRINTED OR ELECTRONIC DRAWINGS AND DOCUMENTATION MAY NOT BE REPRODUCED IN ANY FORM WITHOUT WRITTEN PERMISSION FROM LS3P ASSOCIATES LTD.

REVISIONS:

PROJECT: 7101-141210
DATE: 04/01/15
DRAWN BY: NKS
CHECKED BY: JST

INVENTORY SITE PLAN

I-1

NT JOB #14105

SOLUTIONS THROUGH LISTENING
SERVICE BY DESIGN