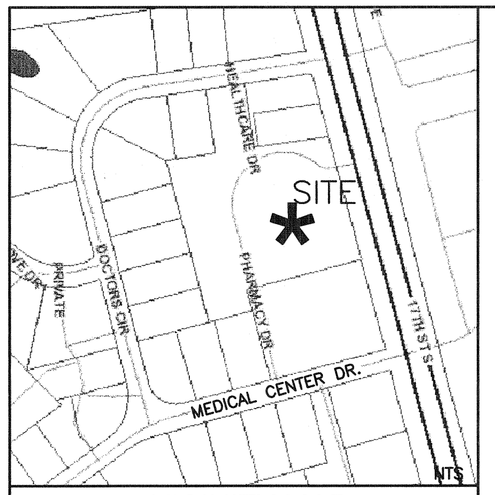

VICINITY MAP

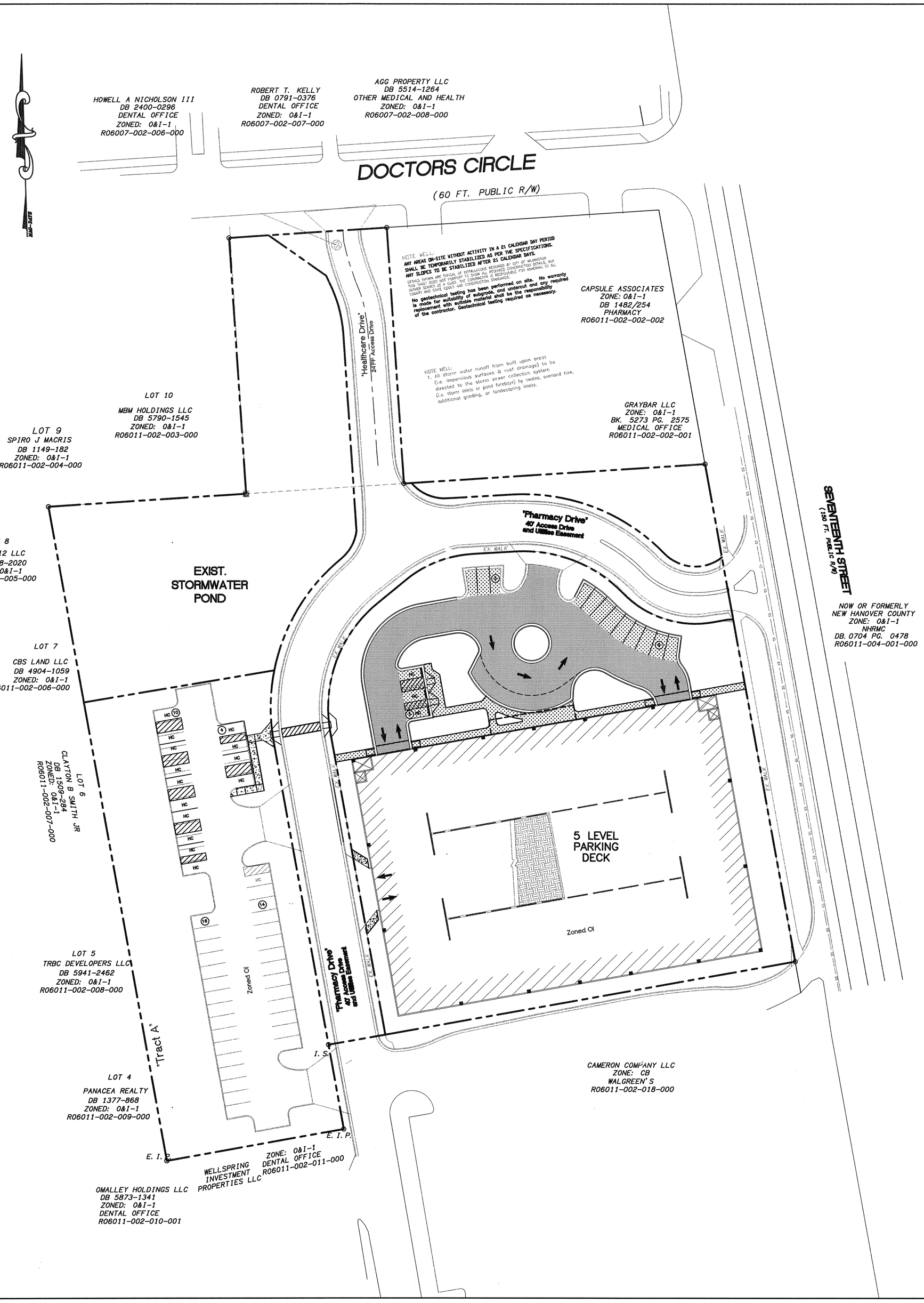

SITE DATA TABLE

PROPOSED USE:	STRUCTURED EMPLOYEE PARKING DECK
SITE ADDRESS:	2120 S. 17TH STREET
PARCEL ID#:	R06011-002-019-000
MAP ID#:	312606.47.9771.000
PARCEL AREA:	4.6 AC (200,376 SF)
PARCEL OWNER:	CAMERON COMPANY LLC
ZONING:	O&I-1 OFFICE AND INSTITUTIONAL, SPECIAL USE
CAMA LAND USE:	URBAN
SOILS:	KUREB-HYDROLOGIC SOIL GROUP "A"
PARCEL NOT LOCATED WITHIN 100 YEAR FLOOD ZONE	
BUILDING SETBACKS: (REQUIRED)	FRONT SETBACK: 20' INTERIOR SIDE SETBACK: 10' CORNER SIDE SETBACK: 20' REAR SETBACKS: 20'
BUILDING SETBACKS: (PROPOSED)	FRONT SETBACK: 21' INTERIOR SIDE SETBACK: 11'

NOTE: NO SETBACKS FROM DRIVE EASEMENTS

BUILDING AREA:	47,214 SF (FOOT PRINT)
BUILDING HEIGHT:	60' (5 LEVEL DECK), 720 PARKING SPACES
BUILDING LOT COVERAGE REQUIREMENT:	40%
BUILDING LOT COVERAGE PROPOSED:	23.56%
BUILDING HEIGHT REQUIREMENT:	45', UP TO 75' WITH SPECIAL USE PERMIT AND 35% LOT COVERAGE.

BUILDING CONSTRUCTION TYPE:

OFF-SITE PARKING FOR NHRMC
PARKING REQUIREMENT HOSPITAL:
1 PER EACH 2 LICENSED BEDS INTENDED FOR PATIENT USE, 1 PER EACH STAFF PERSON, INCLUDING MEDICAL AND SUPPORT STAFF BASED ON THE LARGEST EMPLOYEE SHIFT.

-NO NEW BEDS
-NO NEW EMPLOYEES

EXISTING PARKING:

WEST LOT: 47 REG./1 HC TOTAL=48
EAST LOT:167 REG./4 HC TOTAL=171
TOTAL EXISTING: 214 REG./5 HC=219

PROPOSED PARKING:

WEST LOT: 28 REG./16 HC TOTAL=44
EAST LOT: 732 REG./3 HC TOTAL=735
TOTAL PROPOSED: 760 REG./19 HC=779

HC SPACES REQUIRED (2%): 16 SPACES
HC SPACES PROVIDED: 18 SPACES

BICYCLE PARKING REQUIRED: 20 SPACES
BICYCLE PARKING PROVIDED: 20 SPACES

LANDSCAPING: (REFER TO LANDSCAPE PLAN)

STREETYARD REQUIRED:	18 MULTIPLIER (9' MIN/27' MAX.) 354-33X18=5,778 SF REQUIRED AND PROVIDED
FOUNDATION PLANTINGS:	NORTH: 258X53X.12=1,641 SF REQUIRED AND PROVIDED EAST/WEST: 183X53X.12=1,164 SF REQUIRED AND PROVIDED

SOLID WASTE REMOVAL: NONE REQUIRED

WATER AND SEWER CAPACITY NEEDS: NONE REQUIRED

IMPERVIOUS AREA: (EAST PARKING LOT, WEST PARKING LOT, ROW)

EXISTING IMPERVIOUS AREA:

ASPHALT/CONC./C&G/SIDEWALK:	107,686 SF	
PERCENT IMP.:	54%	

EXISTING IMPERVIOUS AREA REMOVED:

ASPHALT/CONC./C&G/SIDEWALK:	61,245 SF	

NEW IMPERVIOUS AREA ADDED:		WITH 75% CREDIT
BUILDING:	47,214 SF	
ASPHALT/CONC./C&G:	12,049 SF	
PERVIOUS CONCRETE PAVEMENT:	2,307 SF	577 SF
PERVIOUS CONCRETE SIDEWALK:	2,490 SF	623 SF
TOTAL:	64,060 SF	60,463 SF

IMPERVIOUS PROPOSED:		WITH 75% CREDIT
BUILDING:	47,214 SF	
ASPHALT/CONC./C&G:	58,490 SF	
PERVIOUS CONCRETE PAVEMENT:	2,307 SF	577 SF
PERVIOUS CONCRETE SIDEWALK:	2,490 SF	623 SF
TOTAL:	110,501 SF	106,904 SF
PERCENT IMP.:		53.35%

TREE REMOVAL:

REGULATED		SIGNIFICANT
14" PINE	(1)	NO SIGNIFICANT TREES REMOVED
16" PINE	(1)	
9" OAK	(2)	
11" OAK	(5)	
15" OAK	(1)	

For each open utility cut of City streets, a $325 permit shall be required from the City prior to occupancy and/or project acceptance.

CITY OF WILMINGTON NORTH CAROLINA
Public Services • Engineering Division
APPROVED DRAINAGE PLAN
Date:_____ Permit #_____
Signed: _____

Approved Construction Plan

	Name	Date
Planning		
Traffic		
Fire		

NCDENR PWSS WATER PERMIT #: _____
WATER CAPACITY: _____GPD
DWQ SEWER PERMIT #: _____
SEWER CAPACITY: _____GPD
SEWER SHED # AND PLANT: _____
SEWER TO FLOW THROUGH NEI: YES or NO (CIRCLE ONE)

NOTE:
SITE SURVEY INFORMATION REFLECTS CONSTRUCTION DOCUMENT INFORMATION OF SURFACE PARKING LOT THAT IS CURRENTLY EXISTING. SURVEY AND CONSTRUCTION DOCUMENTATION INFORMATION BY HANOVER DESIGN AND PROVIDED BY OWNER.

SCALE: 1" = 40'
0 40 80 120

SYMBOL	DATE	DESCRIPTION	BY
REVISIONS			

© 2016 NORRIS & TUNSTALL

OVERALL SITE PLAN
NHRMC EMPLOYEE PARKING DECK
2120 SOUTH 17TH STREET
WILMINGTON, N. C.

OWNER/DEVELOPER
CAMERON COMPANY, LLC
WILLIAM H. CAMERON, MANAGER
P.O. BOX 3649
WILMINGTON, NC 28406
910 762-2676

NORRIS & TUNSTALL
CONSULTING ENGINEERS, P.C.
902 MARKET STREET
WILMINGTON, NC 28401
PHONE (910) 343-9653
1429 ASH-LITTLE RIVER RD. NW
ASH, NC 28420
PHONE (910) 287-5900
licence #C-3641

16077

DES.	JST
CKD.	JPN
DRWN.	NKS
DATE	8/29/16

NORTH CAROLINA PROFESSIONAL ENGINEER SEAL N.S. TUNSTALL
PRELIMINARY

C0

F:\Projects\2016\16052 NHRMC Parking Deck\16052 Plans\dwg\16052.master.R2.dwg, 8/30/2016 9:20:53 AM

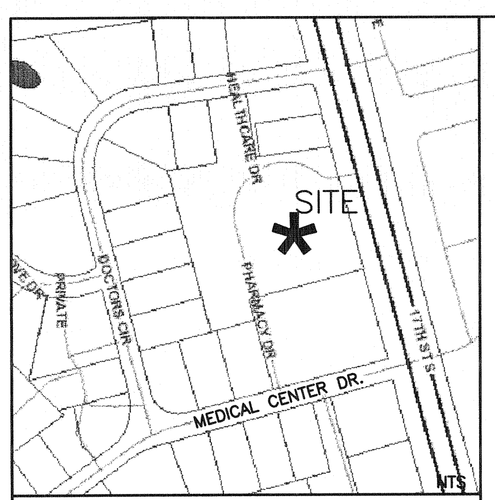

VICINITY MAP

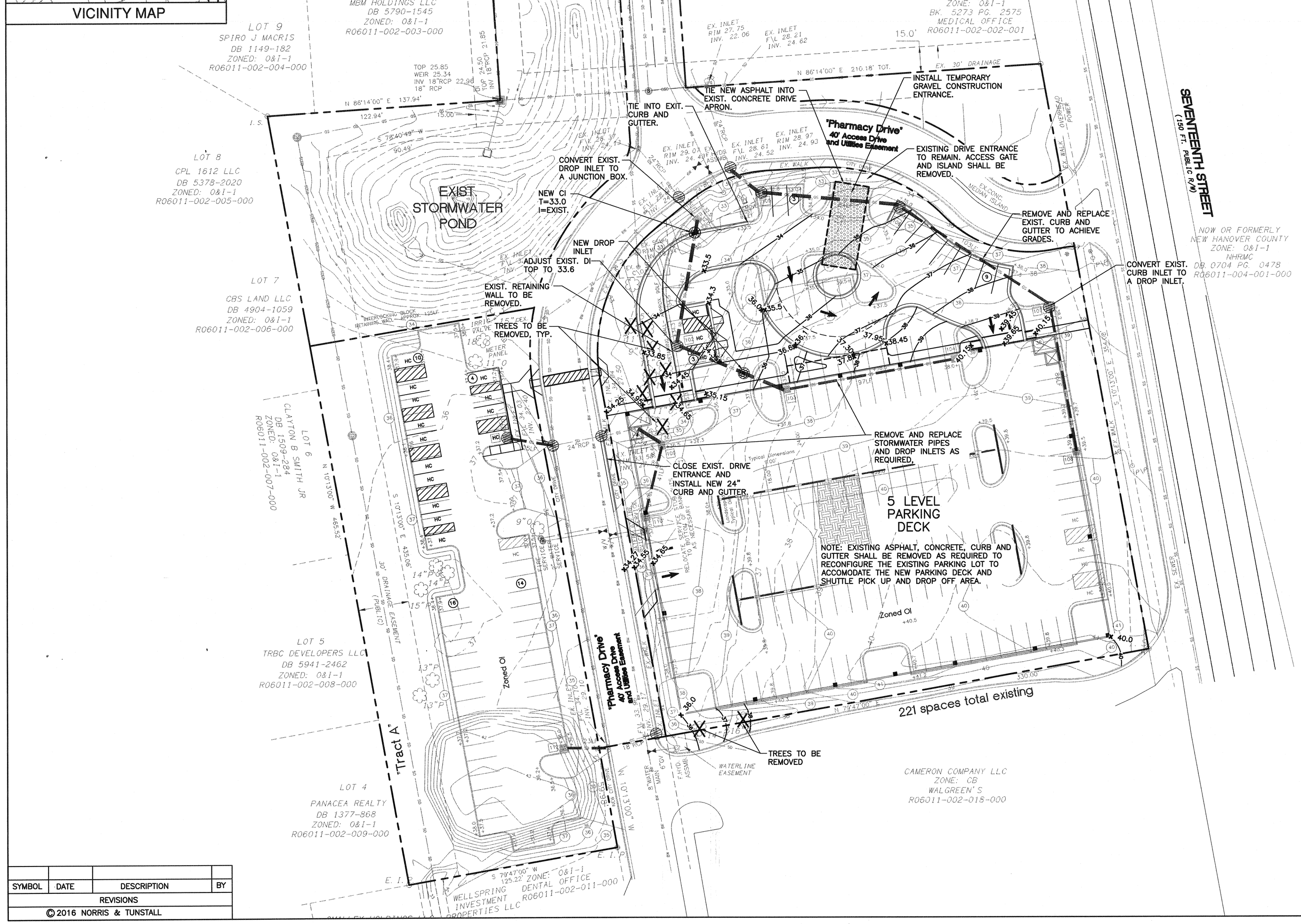

For each open utility cut of City streets, a $325 permit shall be required from the City prior to occupancy and/or project acceptance.

CITY OF WILMINGTON NORTH CAROLINA
Public Services • Engineering Division
APPROVED DRAINAGE PLAN
Date:_____ Permit #_____
Signed: _____

Approved Construction Plan

	Name	Date
Planning		
Traffic		
Fire		

NCDENR PWSS WATER PERMIT #: _____
WATER CAPACITY: _____ GPD
DWQ SEWER PERMIT #: _____
SEWER CAPACITY: _____ GPD
SEWER SHED # AND PLANT: _____
SEWER TO FLOW THROUGH NEI: YES or NO (CIRCLE ONE)

NOTE:
SITE SURVEY INFORMATION REFLECTS CONSTRUCTION DOCUMENT INFORMATION OF SURFACE PARKING LOT THAT IS CURRENTLY EXISTING. SURVEY AND CONSTRUCTION DOCUMENTATION INFORMATION BY HANOVER DESIGN AND PROVIDED BY OWNER.

SCALE: 1" = 30'
0 30 60 90

SYMBOL	DATE	DESCRIPTION	BY

REVISIONS

© 2016 NORRIS & TUNSTALL

GRADING, DRAINAGE AND EROSION CONTROL PLAN
NHRMC EMPLOYEE PARKING DECK
2120 SOUTH 17TH STREET
WILMINGTON, N. C.

OWNER/DEVELOPER
CAMERON COMPANY, LLC
WILLIAM H. CAMERON, MANAGER
P.O. BOX 3649
WILMINGTON, NC 28406
910 762-2676

NORRIS & TUNSTALL
CONSULTING ENGINEERS, P.C.
902 MARKET STREET
WILMINGTON, NC 28401
PHONE (910) 343-9653
1429 ASH-LITTLE RIVER RD. NW
ASH, NC 28420
PHONE (910) 287-5900
licence #C-3641

16077

DES.	JST
CKD.	JPN
DRWN.	NKS
DATE	6/20/16

NORTH CAROLINA PROFESSIONAL ENGINEER SEAL 019681 W.S. TUNSTALL
PRELIMINARY

C1

F:\Projects\2016\16052 NHRMC Parking Deck\16052 Plans\dwg\16052.master.R2.dwg, 8/30/2016 9:21:19 AM

VICINITY MAP

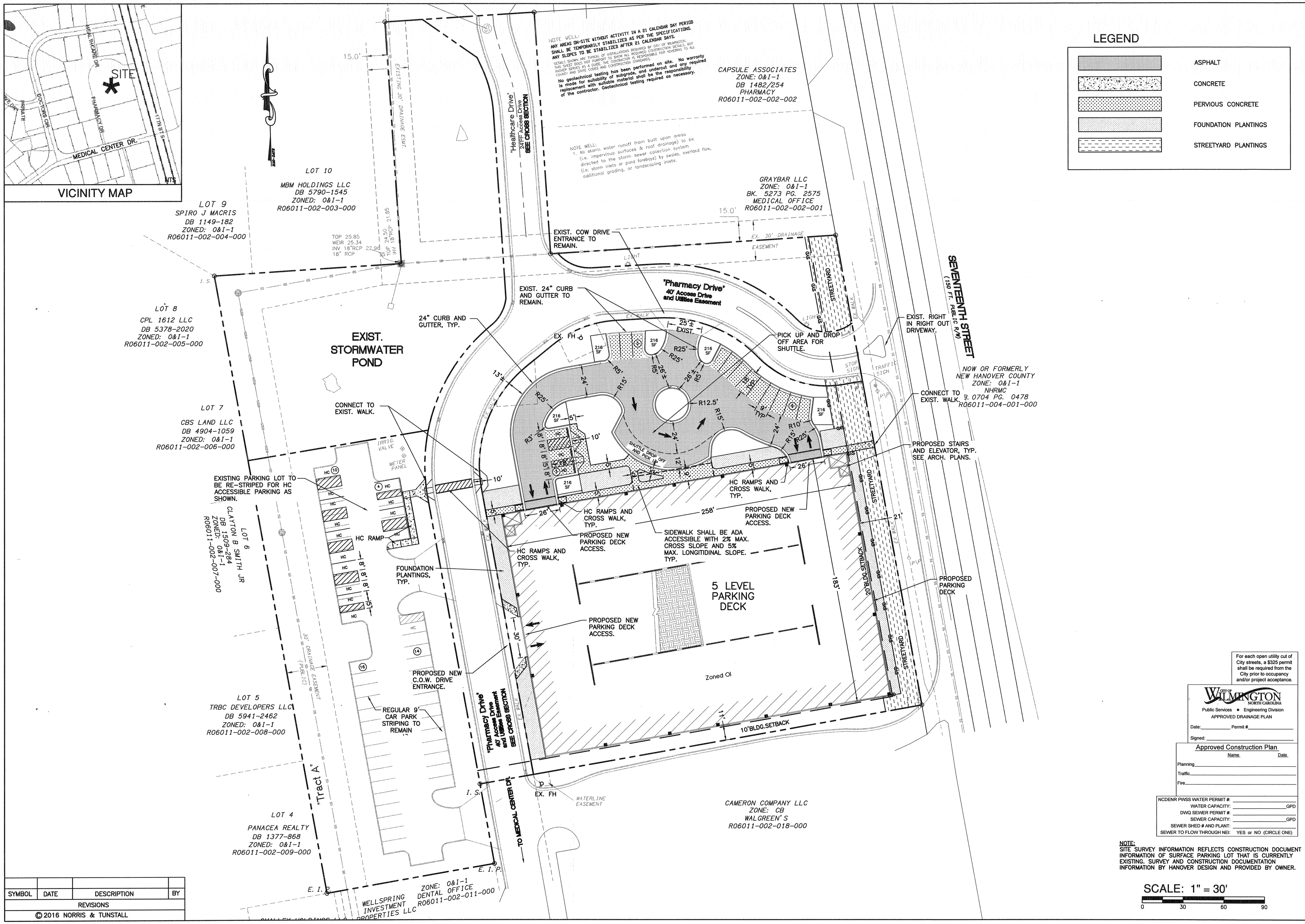

For each open utility cut of City streets, a $325 permit shall be required from the City prior to occupancy and/or project acceptance.

CITY OF WILMINGTON NORTH CAROLINA
Public Services • Engineering Division
APPROVED DRAINAGE PLAN
Date:_____ Permit #:_____
Signed:_____

Approved Construction Plan

	Name	Date
Planning		
Traffic		
Fire		

NCDENR PWSS WATER PERMIT #: _____
WATER CAPACITY: _____GPD
DWQ SEWER PERMIT #: _____
SEWER CAPACITY: _____GPD
SEWER SHED # AND PLANT: _____
SEWER TO FLOW THROUGH NEI: YES or NO (CIRCLE ONE)

NOTE:
SITE SURVEY INFORMATION REFLECTS CONSTRUCTION DOCUMENT INFORMATION OF SURFACE PARKING LOT THAT IS CURRENTLY EXISTING. SURVEY AND CONSTRUCTION DOCUMENTATION INFORMATION BY HANOVER DESIGN AND PROVIDED BY OWNER.

SCALE: 1" = 30'
0 30 60 90

SYMBOL	DATE	DESCRIPTION	BY
REVISIONS			

© 2016 NORRIS & TUNSTALL

LAYOUT PLAN
NHRMC EMPLOYEE PARKING DECK
2120 SOUTH 17TH STREET
WILMINGTON, N. C.

OWNER/DEVELOPER
CAMERON COMPANY, LLC
WILLIAM H. CAMERON, MANAGER
P.O. BOX 3649
WILMINGTON, NC 28406
910 762-2676

NORRIS & TUNSTALL
CONSULTING ENGINEERS, P.C.
902 MARKET STREET
WILMINGTON, NC 28401
PHONE (910) 343-9653
1429 ASH-LITTLE RIVER RD. NW
ASH, NC 28420
PHONE (910) 287-5900
licence #C-3641

16077

DES.	JST
CKD.	JPN
DRWN.	NKS
DATE	6/20/16

NORTH CAROLINA PROFESSIONAL ENGINEER SEAL 19811 W. S. TUNSTALL PRELIMINARY

C2

F:\Projects\2016\16052 NHRMC Parking Deck\16052 Plans\dwg\16052_master-R2.dwg, 8/30/2016 9:21:39 AM

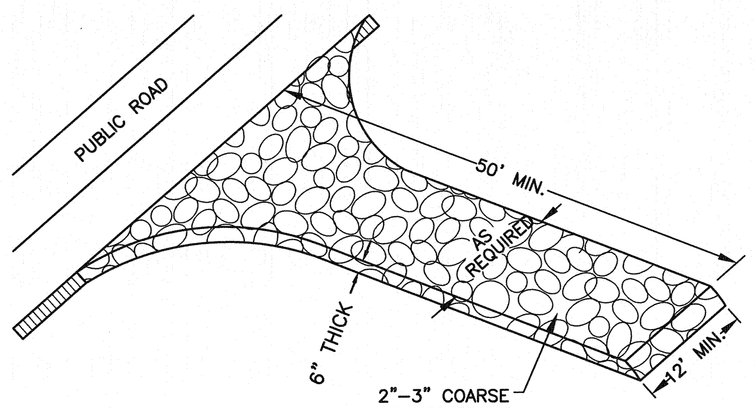

NOT TO SCALE

1 TEMPORARY GRAVELLED CONSTRUCTION ENTRANCE

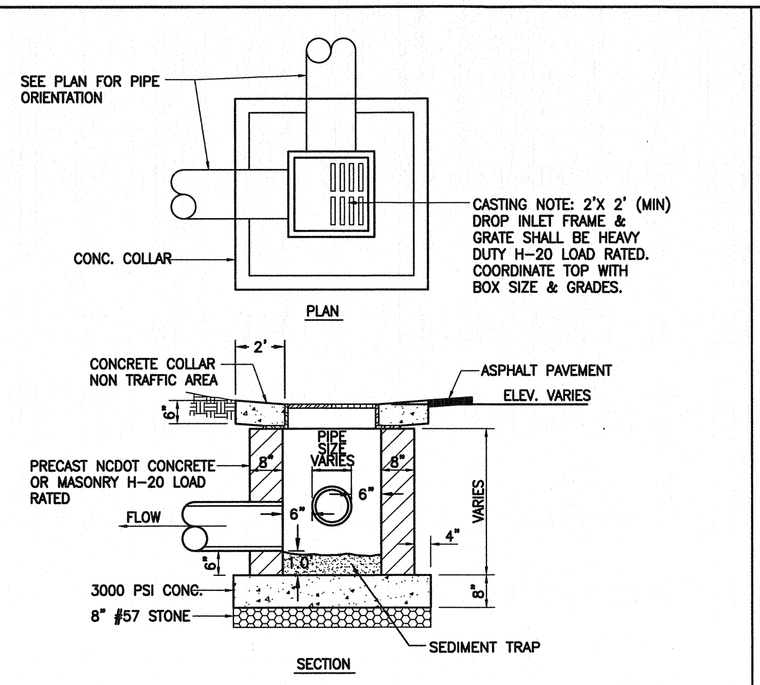

MUST COMPLY WITH CITY OF WILMINGTON STANDARDS

NOT TO SCALE

2 DROP INLET DETAIL

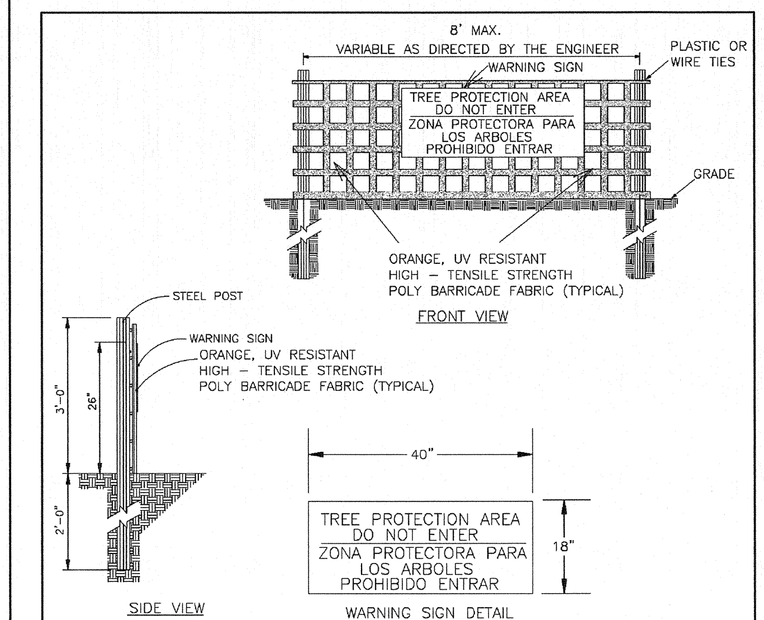

NOTES:

1. THE TREE PROTECTION FENCING SHALL NOT BE VIOLATED FOR THE ENTIRE DURATION OF THE PROJECT WITHOUT APPROVAL FROM URBAN FORESTRY STAFF.
2. WARNING SIGNS TO BE MADE OF DURABLE, WEATHERPROOF MATERIAL. LETTERS TO BE 3" HIGH, MINIMUM, CLEARLY LEGIBLE AND SPACED AS DETAILED.
3. SIGNS SHALL BE PLACED AT 50' MAXIMUM INTERVALS. PLACE A SIGN AT EACH END OF LINEAR TREE PROTECTION AND 50' ON CENTER THEREAFTER. FOR TREE PROTECTION AREAS LESS THAN 100' IN PERIMETER, PROVIDE NO LESS THAN TWO SIGNS PER PROTECTION AREA.
4. ATTACH SIGNS SECURELY TO FENCE POSTS AND FABRIC. MAINTAIN TREE PROTECTION FENCE AND SIGNS THROUGHOUT DURATION OF PROJECT.
5. TREE PROTECTION FENCING AND SIGNAGE SHALL BE REMOVED AFTER CONSTRUCTION.
6. ADDITIONAL SIGNS MAY BE REQUIRED BY CITY OF WILMINGTON, BASED ON ACTUAL FIELD CONDITIONS.

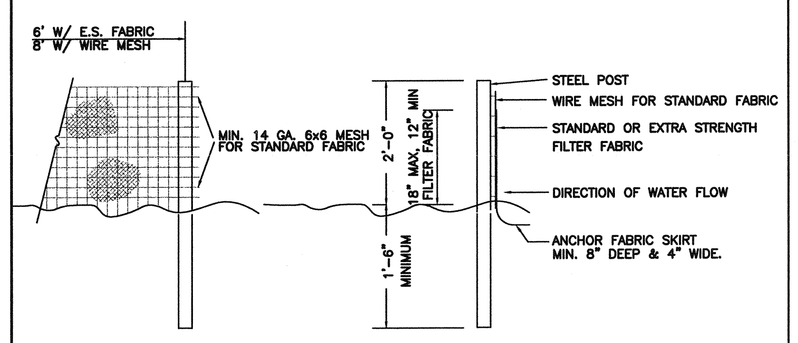

NOTES:

1. SYN. FENCE FABRIC SHALL BE MIN. OF 30" IN WIDTH WITH 30 LB/IN TENSILE STRENGTH FOR STANDARD FABRIC AND 50 LB/IN FOR EXTRA STRENGTH.
2. FABRIC SHALL BE CONTINUOUS LENGTH. IF JOINTS ARE NECESSARY, LAP FABRIC POST TO POST.
3. STEEL POST SHALL BE MIN 4' IN HEIGHT AND BE OF THE SELF-FASTENER STEEL ANGLE TYPE.

NOT TO SCALE

4 TEMPORARY SILT FENCE

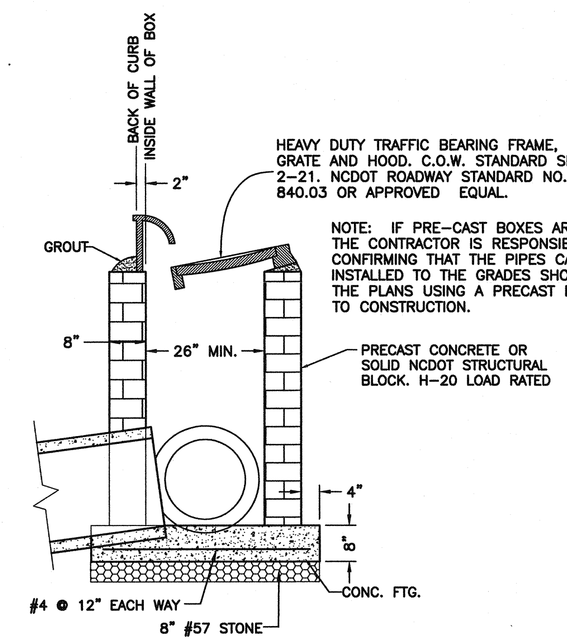

MUST COMPLY WITH CITY OF WILMINGTON STANDARDS

NOT TO SCALE

5 CATCH BASIN DETAIL

NOTE:
THE CRITICAL ROOT ZONE (CRZ) OF A TREE IS WHERE THE MAJORITY OF A TREE'S ROOTS LAY. 85% OF MOST TREE ROOTS ARE FOUND IN THE TOP 24" OF THE SOIL AND SUPPLY THE MAJORITY OF NUTRIENTS AND WATER. GENERALLY, ROOTS SPREAD OUT 2-3X THE HEIGHT OF THE TREE.

NOTE:
CROWN OF THE TREE IS NEEDED FOR LEAF GROWTH TO PRODUCE OXYGEN, FILTER THE AIR, REDUCE WIND AND SOFTEN NOISE. DO NOT DISFIGURE CROWN WITH INTENSIVE PRUNING.

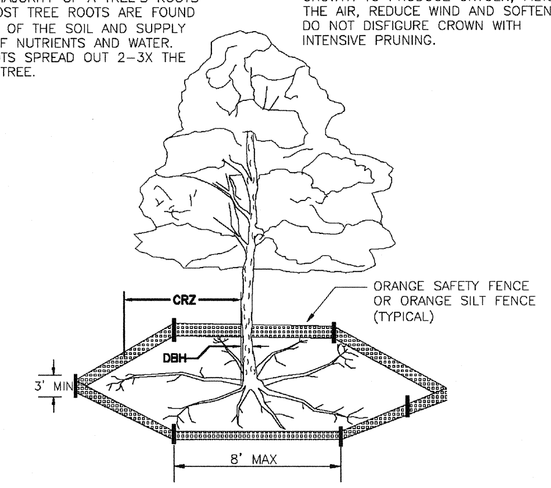

NOTES:

1. PROTECT CRITICAL ROOT ZONE (CRZ) OF TREES PRIOR TO CONSTRUCTION. CLEARLY MARK THE TREES AND ERECT A PROTECTIVE BARRIER AT THE CRZ. BARRIER SHALL BE MAINTAINED UNTIL CONSTRUCTION IS COMPLETE.
2. CRZ RADIUS IS 1 FT PER INCH OF TREE DIAMETER AT BREAST HEIGHT (DBH).
3. IF CONSTRUCTION OCCURS WITHIN THE CRZ, AT LEAST 12" OF MULCH AND/OR LOGGING MATTS SHALL BE PLACED WHERE MACHINERY MANEUVERS TO REDUCE SOIL COMPACTION IN THIS ZONE.
4. WHERE SIDEWALKS AND PATHWAYS PASS WITHIN CRZ, EXTRA CARE SHALL BE TAKEN TO AVOID DAMAGE TO THE ROOTS. ALTERNATE CONSTRUCTION METHODS, SUCH AS A REINFORCED SIDEWALK, SHALL BE IMPLEMENTED AS NECESSARY.
5. FOR ALL TREES, CUTTING OF LARGE STRUCTURAL ROOTS LOCATED NEAR THE BASE OF THE TRUNK IS PROHIBITED. DO NOT COMPACT SOIL BENEATH TREES. NO VEHICLE SHALL BE ALLOWED TO PARK UNDER TREES. NO MATERIALS OR EQUIPMENT SHALL BE STORED BENEATH TREES. DAMAGING THE BARK WITH LAWNMOWERS, CONSTRUCTION EQUIPMENT, OR ANYTHING ELSE IS PROHIBITED. CONTRACTOR SHALL REPAIR DAMAGE TO TREES.
6. FAILING TO INSTALL OR MAINTAIN PROTECTION MEASURES SHALL RESULT IN A STOP WORK ORDER AND FINE OF $500/DAY. DISTURBANCE OTHER THAN THAT ALLOWED ON THE APPROVED PLAN WILL REQUIRE OWNER TO POST A LETTER OF CREDIT FOR 3 YRS FOR TREE MITIGATION.

EROSION CONTROL NOTES AND MAINTENANCE PLAN:

1. ALL EROSION AND SEDIMENT CONTROL MEASURES WILL BE CHECKED FOR STABILITY AND OPERATION FOLLOWING EVERY RUNOFF-PRODUCING RAINFALL, BUT IN NO CASE, LESS THAN ONCE EVERY WEEK AND WITHIN 24 HOURS OF EVERY HALF-INCH RAINFALL.

2. ALL POINTS OF EGRESS WILL HAVE CONSTRUCTION ENTRANCES THAT WILL BE PERIODICALLY TOP-DRESSED WITH AN ADDITIONAL 2 INCHES OF #4 STONE TO MAINTAIN PROPER DEPTH. THEY WILL BE MAINTAINED IN A CONDITION TO PREVENT MUD OR SEDIMENT FROM LEAVING THE SITE. IMMEDIATELY REMOVE OBJECTIONABLE MATERIAL SPILLED WASHED OR TRACKED ONTO THE CONSTRUCTION ENTRANCE OR ROADWAYS.

3. SEDIMENT WILL BE REMOVED FROM HARDWARE CLOTH AND GRAVEL INLET PROTECTION, BLOCK AND GRAVEL INLET PROTECTION, ROCK DOUGHNUT INLET PROTECTION AND ROCK PIPE INLET PROTECTION WHEN THE DESIGNED STORAGE CAPACITY HAS BEEN HALF FILLED WITH SEDIMENT. ROCK WILL BE CLEANED OR REPLACED WHEN THE SEDIMENT POOL NO LONGER DRAINS AS DESIGNED. DEBRIS WILL BE REMOVED FROM THE ROCK AND HARDWARE CLOTH TO ALLOW PROPER DRAINAGE. SILT SACKS WILL BE EMPTIED ONCE A WEEK AND AFTER EVERY RAIN EVENT. SEDIMENT WILL BE REMOVED FROM AROUND WATTLES, BEAVER DAMS, DANDY SACKS AND SOCKS ONCE A WEEK AND AFTER EVERY RAIN EVENT.

4. DIVERSION DITCHES WILL BE CLEANED OUT IMMEDIATELY TO REMOVE SEDIMENT OR OBSTRUCTIONS FROM THE FLOW AREA. THE DIVERSION RIDGES WILL ALSO BE REPAIRED. SWALES MUST BE TEMPORARILY STABILIZED WITHIN 21 CALENDAR DAYS OF CEASE OF ANY PHASE OF ACTIVITY ASSOCIATED WITH A SWALE.

5. SEDIMENT WILL BE REMOVED FROM BEHIND THE SEDIMENT FENCE WHEN IT BECOMES HALF FILLED. THE SEDIMENT FENCE WILL BE REPAIRED AS NECESSARY TO MAINTAIN A BARRIER. STAKES MUST BE STEEL. STAKE SPACING WILL BE 6 FEET MAX. WITH THE USE OF EXTRA STRENGTH FABRIC, WITHOUT WIRE BACKING. STAKE SPACING WILL BE 8 FEET MAX. WHEN STANDARD STRENGTH FABRIC AND WIRE BACKING ARE USED. IF ROCK FILTERS ARE DESIGNED AT LOW POINTS IN THE SEDIMENT FENCE, THE ROCK WILL BE REPAIRED OR REPLACED IF IT BECOMES HALF-FULL OF SEDIMENT, NO LONGER DRAINS AS DESIGNED OR IS DAMAGED.

6. SEDIMENT WILL BE REMOVED FROM SEDIMENT TRAPS WHEN THE DESIGNED STORAGE CAPACITY HAS BEEN HALF FILLED WITH SEDIMENT. THE ROCK WILL BE CLEANED OR REPLACED WHEN THE SEDIMENT POOL NO LONGER DRAINS OR WHEN THE ROCK IS DISLODGED. BAFFLES WILL BE REPAIRED OR REPLACED IF THEY COLLAPSE, TEAR, DECOMPOSE OR BECOME INEFFECTIVE. THEY WILL BE REPLACED PROMPTLY. SEDIMENT WILL BE REMOVED WHEN DEPOSITS REACH HALF THE HEIGHT OF THE 1ST BAFFLE. FLOATING SKIMMERS WILL BE INSPECTED AND KEPT CLEAN WEEKLY.

7. SEDIMENT WILL BE REMOVED FROM THE SEDIMENT BASIN WHEN THE DESIGN STORAGE CAPACITY HAS BEEN HALF FILLED WITH SEDIMENT. ROCK WILL BE CLEANED OR REPLACED WHEN THE SEDIMENT POOL NO LONGER DRAINS OR IF THE ROCK IS DISLODGED. BAFFLES WILL BE REPAIRED OR REPLACED IF THEY COLLAPSE, TEAR, DECOMPOSE OR BECOME INEFFECTIVE. THEY WILL BE REPLACED PROMPTLY. SEDIMENT WILL BE REMOVED FROM BAFFLES WHEN DEPOSITS REACH HALF THE HEIGHT OF THE 1ST BAFFLE. FLOATING SKIMMERS WILL BE INSPECTED WEEKLY AND WILL BE KEPT CLEAN.

8. LAND QUALITY REQUIRES:
ALL SEEDED AREAS WILL BE FERTILIZED, RESEEDED AS NECESSARY, AND MULCHED, ACCORDING TO SPECIFICATIONS IN THE VEGETATIVE PLAN, TO MAINTAIN A VIGOROUS, DENSE VEGETATIVE COVER. ALL SLOPES WILL BE STABILIZED WITHIN 21 CALENDAR DAYS. ALL OTHER AREAS WILL BE STABILIZED WITHIN 15 WORKING DAYS.
WATER QUALITY REQUIRES:
ALL SEEDED AREAS WILL BE FERTILIZED, RESEEDED AS NECESSARY AND MULCHED ACCORDING TO SPECIFICATIONS IN THE VEGETATIVE PLAN TO MAINTAIN A VIGOROUS, DENSE VEGETATIVE COVER. ALL PERIMETER DIKES, SWALES, DITCHES, PERIMETER SLOPES, ALL SLOPES STEEPER THAN 3' HORIZONTAL TO 1' VERTICAL (3:1) AND ALL HIGH QUALITY WATER (HQW) ZONES SHALL BE PROVIDED TEMPORARY OR PERMANENT STABILIZATION WITH GROUND COVER AS SOON AS PRACTICABLE BUT IN ANY EVENT WITHIN SEVEN (7) CALENDAR DAYS FROM THE LAST LAND-DISTURBING ACTIVITY. ALL OTHER DISTURBED AREAS SHALL BE PROVIDED TEMPORARY OR PERMANENT STABILIZATION WITH GROUND COVER AS SOON AS PRACTICABLE BUT IN ANY EVENT WITHIN FOURTEEN (14) CALENDAR DAYS FROM THE LAST LAND-DISTURBING ACTIVITY.

9. FLOCCULANTS WILL BE USED TO ADDRESS TURBIDITY ISSUES. THE PUMPS, TANKS, HOSES AND INJECT SYSTEMS WILL BE CHECKED FOR PROBLEMS OR TURBID DISCHARGES DAILY.

10. BASIN OUTLET STRUCTURES AND SKIMMERS SHALL WITHDRAW WATER FROM THE SURFACE.

TEMPORARY/PERMANENT GRASS SPECIFICATION:

1. CHISEL COMPACTED AREAS AND SPREAD TOPSOIL 3 INCHES DEEP OVER ADVERSE SOIL CONDITIONS.

2. RIP THE ENTIRE AREA TO A 6 INCH DEPTH.

3. REMOVE ALL ROCKS, ROOTS AND OTHER OBSTRUCTIONS LEAVING SURFACES SMOOTH AND UNIFORM.

4. APPLY AGRICULTURAL LIME AND FERTILIZER UNIFORMLY AND MIX WITH SOIL.
LIME: 45 LBS. PER 1000 S.F.
PHOSPHOROUS: 20 LBS PER 1000 S.F.
FERTILIZER: 17 LBS. PER 1000 S.F.

5. CONTINUE TILLAGE UNTIL A WELL PULVERIZED, FIRM, UNIFORM SEED BED IS PREPARED 4-6 INCHES DEEP.

6. SEED ON A FRESHLY PREPARED SEED BED AND COVER SEED LIGHTLY. 2 – 3 LBS PER 1000 S.F. (SEE MIXTURE BELOW)

7. MULCH IMMEDIATELY AFTER SEEDING AND ANCHOR MULCH.
GRAIN STRAW & HAY AT 75 TO 100 LBS PER 1000 S.F.
WOOD CHIPS AT 500 LBS. PER 1000 S.F.
JUTE & MESH AS PER MANUFACTURER

8. ASPHALT FOR ANCHORING MULCH SHALL BE TYPE SS-1 EMULSION AND APPLIED AT A RATE OF 1000 GAL. PER ACRE FOR SLOPE STABILIZATION, AND 150 GAL. PER TON OF STRAW FOR ANCHORING STRAW.

9. INSPECT ALL SEEDED AREAS AND MAKE NECESSARY REPAIRS OR RESEED WITHIN THE PLANTING SEASON, IF POSSIBLE. IF GRASS STAND SHOULD BE OVER 60% DAMAGED, REESTABLISH FOLLOWING ORIGINAL LIME, FERTILIZER AND SEEDING RATES.

10. CONSULT CONSERVATION INSPECTOR ON MAINTENANCE, TREATMENT, AND FERTILIZATION AFTER PERMANENT COVER IS ESTABLISHED.

11. SEED FOR TEMPORARY AND PERMANENT APPLICATIONS SHALL BE:

20%	CARPET GRASS
28%	BERMUDA GRASS
20%	TURF FESCUE
10%	CREEPING RED FESCUE
20%	ANNUAL RYE GRAIN

*BERMUDA SEED SHALL BE HULLED FOR WARM WEATHER PLANTING. PURITY OF SEED SHALL BE A MIN. OF 98% AND GERMINATION SHALL BE A MIN. OF 85%.

ALL DISTURBED AREA SHALL BE SEEDED WITHIN 7-14 DAYS OF THE COMPLETION OF GRADING. SEE EROSION CONTROL AND MAINTENANCE NOTES. CONSULT CONSERVATION ENGINEER OR SOIL CONSERVATION SERVICE FOR ADDITIONAL INFORMATION CONCERNING OTHER ALTERNATIVES FOR VEGETATION OF DENUDED AREAS. THE ABOVE VEGETATION RATES ARE THOSE WHICH DO WELL UNDER LOCAL CONDITIONS, OTHER SEEDING SCHEDULES MAY BE POSSIBLE.

SITE WORK NOTES:

1. THE CONTRACTOR SHALL VISIT THE SITE TO BECOME FAMILIAR WITH FIELD CONSTRUCTION CONDITIONS.

2. CONTRACTOR SHALL COORDINATE WORK WITHIN NCDOT AND LOCAL RIGHT OF WAYS WITH PROPER AUTHORITIES AND SHALL MEET ANY REQUIREMENTS AS TO TRAFFIC CONTROL AND CONNECTION TO EXISTING STREETS.

3. CLEARING AND GRUBBING: REMOVE ALL TREES AS REQUIRED UNLESS OTHERWISE NOTED TO REMAIN, STUMPS, ROOTS, SHRUBBERY, ASPHALT, CONCRETE, STRUCTURES, BURIED UTILITIES, STORAGE TANKS, ETC. WITHIN LIMITS OF CONSTRUCTION.

4. STRIPPING: BEFORE EXCAVATING OR FILLING, REMOVE ALL TOPSOIL, WOOD, LEAVES, AND ANY OTHER UNSUITABLE MATERIAL.

5. MUCKING: REMOVE ANY SOFT, ORGANIC SILT MATERIALS AND EXISTING BURIED CONSTRUCTION DEBRIS AS REQUIRED AND FILL TO SUBGRADE ELEVATIONS WITH A CLEAN SELECT-FILL COMPACTED AS SPECIFIED.

6. DISPOSAL: CLEARED, GRUBBED, STRIPPED OR EXCAVATED SPOIL SHALL BE REMOVED FROM SITE AND DISPOSED OF IN ACCORDANCE WITH ALL APPLICABLE LOCAL AND STATE CODES.

7. BORROW MATERIAL: THE CONTRACTOR SHALL FURNISH BORROW MATERIAL REQUIRED FROM OFF SITE AND OBTAIN ALL REQUIRED PERMITS ASSOCIATED WITH BORROW OPERATIONS.

8. FILL AND COMPACTION: AFTER STRIPPING THOSE AREAS DESIGNATED TO RECEIVE FILL SHOULD BE PROOFROLLED. THE TOP 8" OF SUBGRADE SHALL BE COMPACTED TO AT LEAST 98% OF MAXIMUM DENSITY AT OPTIMUM MOISTURE CONTENT. ANY AREA WHICH PUMPS OR RUTS EXCESSIVELY SHOULD BE UNDERCUT AND REPLACED WITH A CLEAN, SILTY OR CLAYEY SAND HAVING A UNIFIED SOIL CLASSIFICATION OF SP, SM, OR SC. FILL MATERIAL 5" OUTSIDE OF BUILDING AREAS SHALL THEN BE PLACED IN LAYERS NOT TO EXCEED 8" AND COMPACTED TO AT LEAST 95% OF THE STANDARD PROCTOR MAXIMUM DRY DENSITY (ASTM D-698) WITH THE UPPER 12 INCHES OF SUBGRADE BEING COMPACTED TO 98% OF THE STANDARD PROCTOR MAXIMUM DRY DENSITY. FILL MATERIALS WITHIN BUILDING AREAS TO A LINE OUTSIDE THE BUILDING AREAS SHALL BE PLACED IN LAYERS NOT TO EXCEED 8" AND COMPACTED TO AT LEAST 98% OF THE STANDARD PROCTOR MAXIMUM DRY DENSITY (ASTM D-698) WITH THE UPPER 12 INCHES OF SUBGRADE BEING COMPACTED IN 6 INCH LAYERS TO 100% OF THE STANDARD PROCTOR MAXIMUM DRY DENSITY. IN AREAS WHERE NO STRUCTURAL FILL IS TO BE PLACED THE UPPER 12 INCHES OF IN-PLACE SUBGRADE SHOULD BE COMPACTED TO AT LEAST 98% OF THE STANDARD PROCTOR MAXIMUM DRY DENSITY. IF THE MATERIAL IS TOO DRY TO COMPACT TO THE REQUIRED DENSITY EACH LAYER SHALL BE WETTED IN ACCORDANCE WITH COMPACTION REQUIREMENTS. IF THE MATERIAL IS TOO WET TO SECURE PROPER COMPACTION, IT SHALL BE HARROWED REPEATEDLY OR OTHERWISE AERATED WITH SUITABLE EQUIPMENT UNTIL OPTIMUM MOISTURE CONTENT IS OBTAINED. FILL SHALL BE PLACED IN SUCH A MANNER THAT THE SURFACE WILL DRAIN READILY AT ALL TIMES. SEE STRUCTURAL NOTES AND SOILS REPORT FOR ADDITIONAL REQUIREMENTS.

9. LAYOUT: THE CONTRACTOR SHALL PROVIDE ALL LAYOUT REQUIRED TO CONSTRUCT HIS WORK.

10. THE CONTRACTOR IS RESPONSIBLE FOR THE LOCATION AND PROTECTION OF EXISTING UTILITIES DURING CONSTRUCTION.

11. EXISTING BOUNDARY AND TOPOGRAPHIC INFORMATION FROM SURVEY BY _____ AND PROVIDED BY OWNER.

12. THE CONTRACTOR SHALL VERIFY DIMENSIONS AT JOBSITE.

13. THE CONTRACTOR IS RESPONSIBLE FOR THE COORDINATION OF RELOCATION OR DISCONNECTION OF ALL EXISTING UTILITIES WITH APPLICABLE AGENCIES AND AUTHORITIES.

14. ALL PAVEMENT AND BASE MATERIALS AND WORKMANSHIP SHALL CONFORM TO NCDOT STANDARDS.

15. WATER AND SEWER SERVICES SHALL BE INSTALLED TO MEET LOCAL AND STATE PLUMBING CODES. METER AND TAPS SHALL MEET ALL LOCAL REQUIREMENTS.

16. ALL AREAS SHALL BE GRADED FOR POSITIVE DRAINAGE.

17. SEE SOILS REPORT FOR ADDITIONAL REQUIREMENTS.

18. CONTRACTOR SHALL NOTE THAT EARTHWORK QUANTITIES ARE HIS RESPONSIBILITY. PLANS DO NOT REPRESENT A BALANCED EARTHWORK CONDITION.

19. REINF. CONC. PIPE SHALL BE CLASS III W/RUBBER GASKETED JOINT OR "RAM NECK". INSTALL PER MANUFACTURER'S REQUIREMENTS.

20. USE WHITE LANE MARKING PAINT FOR ALL PAVEMENT MARKINGS. PAINT SHALL BE A CHLORINATED RUBBER ALKYD, FS TT-P-115, TYPE III, FACTORY MIXED, QUICK DRYING, NON-BLEEDING.

21. REFER TO THE PLUMBING DRAWINGS FOR LOCATION AND INVERTS OF NEW WASTE, WATER AND ROOF DRAIN LINES.

CALL 811 (3) WORKING DAYS BEFORE YOU DIG.

For each open utility cut of City streets, a $325 permit shall be required from the City prior to occupancy and/or project acceptance.

CITY OF WILMINGTON NORTH CAROLINA
Public Services • Engineering Division
APPROVED STORMWATER MANAGEMENT PLAN
Date:_____ Permit #_____
Signed: _____

Approved Construction Plan

	Name	Date
Planning		
Traffic		
Fire		

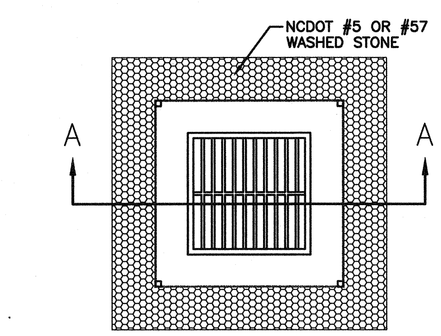

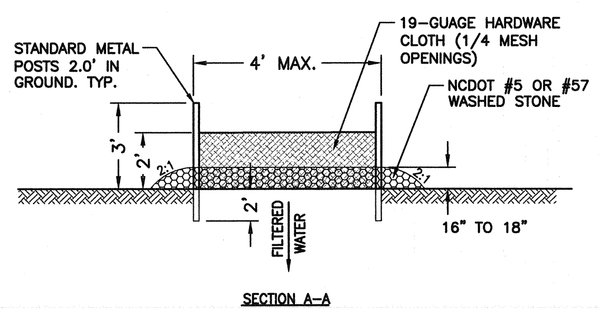

SECTION A-A

CONSTRUCTION SEQUENCE:
1. UNIFORMLY GRADE A SHALLOW DEPRESSION APPROACHING THE INLET.
2. DRIVE 5' STEEL POST 2' INTO THE GROUND SURROUNDING THE INLET. SPACE POST EVENLY AROUND THE PERIMETER OF THE INLET, A MAXIMUM OF 4' APART.
3. SURROUND THE POST WITH WIRE MESH HARDWARE CLOTH. SECURE THE WIRE MESH TO THE STEEL POST AT THE TOP, MIDDLE AND BOTTOM. PLACING A 2' FLAP OF THE WIRE MESH UNDER THE GRAVEL FOR ANCHORING IS RECOMMENDED.
4. PLACE CLEAN GRAVEL (NCDOT #5 OR #57 STONE) ON A 2:1 SLOPE WITH A HEIGHT OF 16" TO 18" AROUND THE WIRE, AND SMOOTH TO AN EVEN GRADE.
5. ONCE THE CONTRIBUTING DRAINAGE AREA HAS BEEN STABILIZED, REMOVE ACCUMULATED SEDIMENT, AND ESTABLISH FINAL GRADING ELEVATIONS.
6. COMPACT THE AREA PROPERLY AND STABILIZE IT WITH GROUNDCOVER.

MAINTENANCE:
INSPECT INLETS AT LEAST WEEKLY AND AFTER EACH SIGNIFICANT (1/2 INCH OR GREATER) RAINFALL EVENT. CLEAR THE MESH WIRE OF ANY DEBRIS OR OTHER OBJECTS TO PROVIDE ADEQUATE FLOW FOR SUBSEQUENT RAINS. TAKE CARE NOT TO DAMAGE OR UNDERCUT THE WIRE MESH DURING SEDIMENT REMOVAL. REMOVE SEDIMENT WHEN ACCUMULATION REACHES HALF THE DEPTH OF ROCK. REPLACE STONE WHEN IT NO LONGER DRAINS AS DESIGNED.

NOT TO SCALE

8 HARDWARE CLOTH AND GRAVEL INLET PROTECTION

7

SYMBOL	DATE	DESCRIPTION	BY
		REVISIONS	

© 2014 NORRIS & TUNSTALL

NOTES AND DETAILS
NHRMC EMPLOYEE PARKING DECK
2120 SOUTH 17TH STREET
WILMINGTON, N. C.

OWNER/DEVELOPER
CAMERON COMPANY, LLC
WILLIAM H. CAMERON, MANAGER
P.O. BOX 3649
WILMINGTON, NC 28406
910 762-2676

NORRIS & TUNSTALL
CONSULTING ENGINEERS, P.C.
902 MARKET STREET
WILMINGTON, NC 28401
PHONE (910) 343-9653
1429 ASH-LITTLE RIVER RD. NW
ASH, NC 28420
PHONE (910) 287-5900
licence #C-3641

16077

DES.	JST
CKD.	JPN
DRWN.	NKS
DATE	8/29/16

NORTH CAROLINA PROFESSIONAL ENGINEER SEAL — PRELIMINARY — N.S. TUNSTALL

C3

F:\Projects\2016\16052 NHRMC Parking Deck\16052 Plans\dwg\16052.master.R2.dwg, 8/30/2016 9:22:32 AM

IF PEDESTRIANS DO NOT CROSS THE CURB CUT, THEN SIDE FLARES ARE NOT REQUIRED AND CURB ON BOTH SIDES MAY RETURN FOR FULL DEPTH OF THE CURB CUT.

NOTE:
1. RAMP SHALL HAVE A DETECTABLE WARNING COMPLYING WITH ADA GUIDELINES:
2. THE DETECTABLE WARNINGS AT CURB RAMPS SHALL BE 24 INCHES MINIMUM IN THE DIRECTION OF TRAVEL AND EXTEND THE FULL WIDTH OF THE CURB RAMP OR FLUSH SURFACE.
3. MARKED CROSSINGS THAT ARE RAISED TO THE SAME LEVEL AS THE ADJOINING SIDEWALK SHALL BE PRECEDED BY A 24 INCH DEEP DETECTABLE WARNING EXTENDING THE FULL WIDTH OF THE MARKED CROSSING.
4. DETECTABLE WARNINGS SHALL CONSIST OF RAISED TRUNCATED DOMES WITH A DIAMETER OF NOMINAL 0.9 IN (23 MM), A HEIGHT OF NOMINAL 0.2 IN (5 MM) AND A CENTER-TO-CENTER SPACING OF NOMINAL 2.35 IN (60 MM) AND SHALL CONTRAST VISUALLY WITH ADJOINING SURFACES, EITHER LIGHT-ON-DARK, OR DARK-ON-LIGHT. THE MATERIAL USED TO PROVIDE CONTRAST SHOULD CONTRAST BY AT LEAST 70% – REFER TO ADA GUIDELINES FOR DEFINITION OF "CONTRAST".
5. THE MATERIAL USED TO PROVIDE CONTRAST SHALL BE AN INTEGRAL PART OF THE WALKING SURFACE. DETECTABLE WARNINGS USED ON INTERIOR SURFACES SHALL DIFFER FROM ADJOINING WALKING SURFACES IN RESILIENCY OR SOUND-ON-CANE CONTACT.

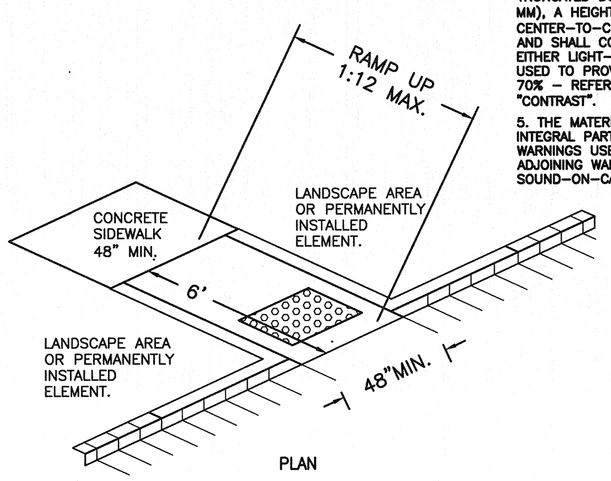

PLAN

* SEE NOTES ON DETECTABLE WARNING

1 SIDEWALK, CURB CUT AND WHEEL CHAIR RAMP DETAIL

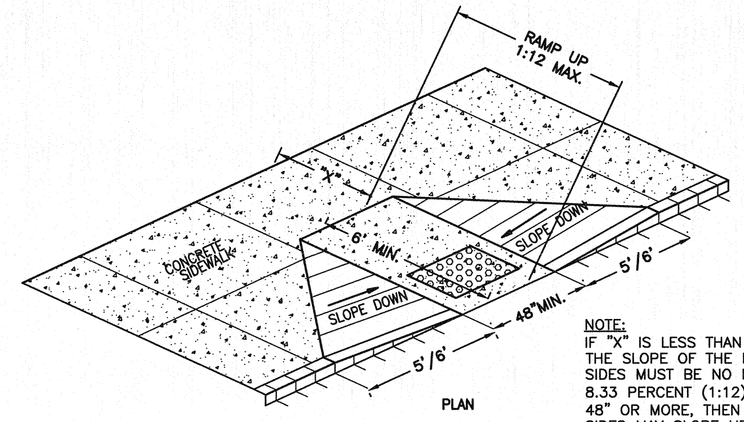

PLAN

* SEE NOTES ON DETECTABLE WARNING

NOTE:
IF "X" IS LESS THAN 48" THEN THE SLOPE OF THE FLARED SIDES MUST BE NO MORE THAN 8.33 PERCENT (1:12). IF "X" IS 48" OR MORE, THEN THE FLARED SIDES MAY SLOPE UP TO 10 PERCENT (1:10) BUT NOT MORE.

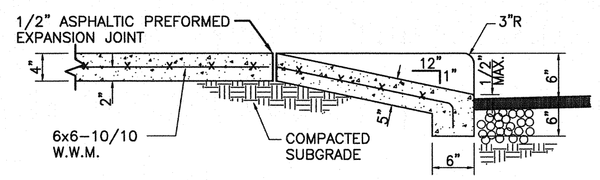

SECTION WHEEL CHAIR RAMP

NOT TO SCALE

2 SIDEWALK, CURB CUT AND WHEEL CHAIR RAMP DETAIL

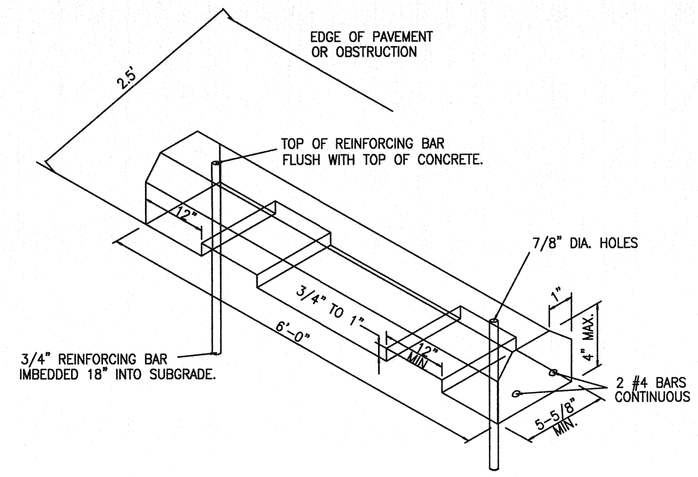

NOT TO SCALE

3 CONCRETE WHEEL STOP DETAIL

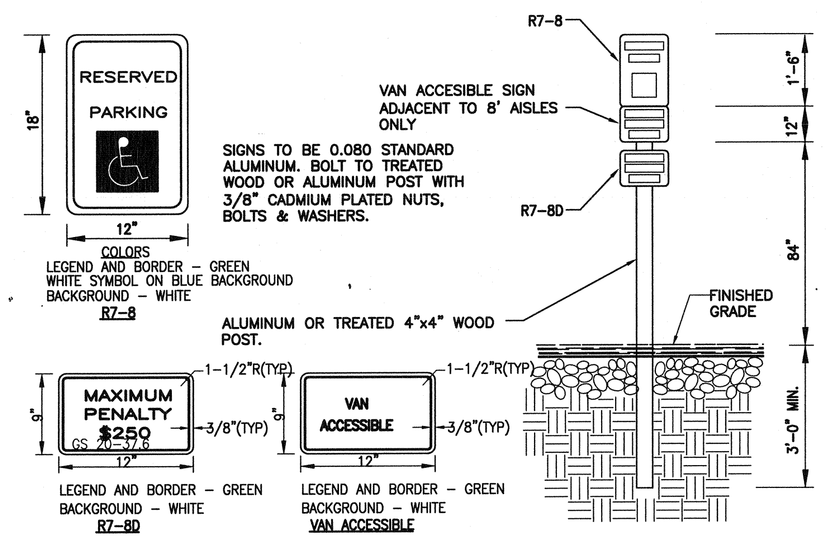

NOT TO SCALE

4 TYPICAL HANDICAPPED SIGN DETAIL

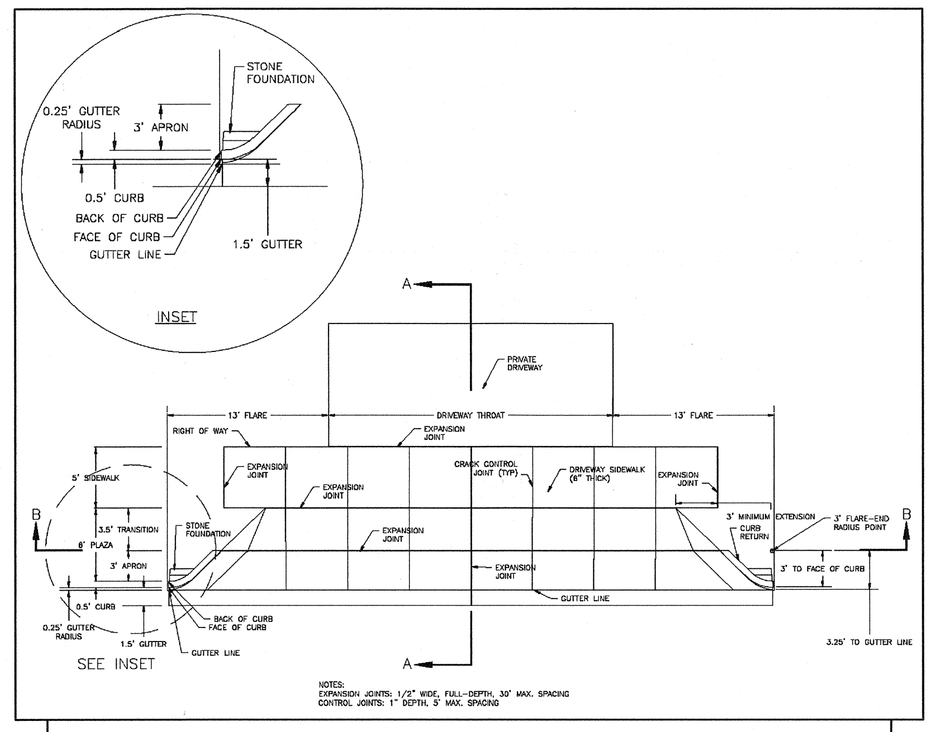

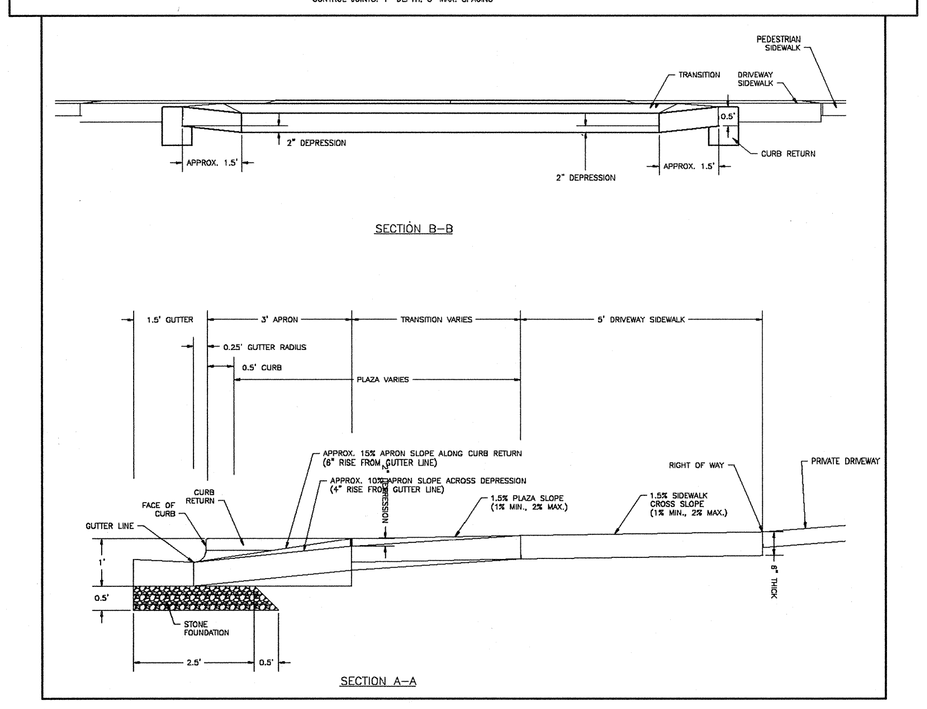

NOT TO SCALE

8 STANDARD CITY OF WILMINGTON DRIVE WAY DETAIL

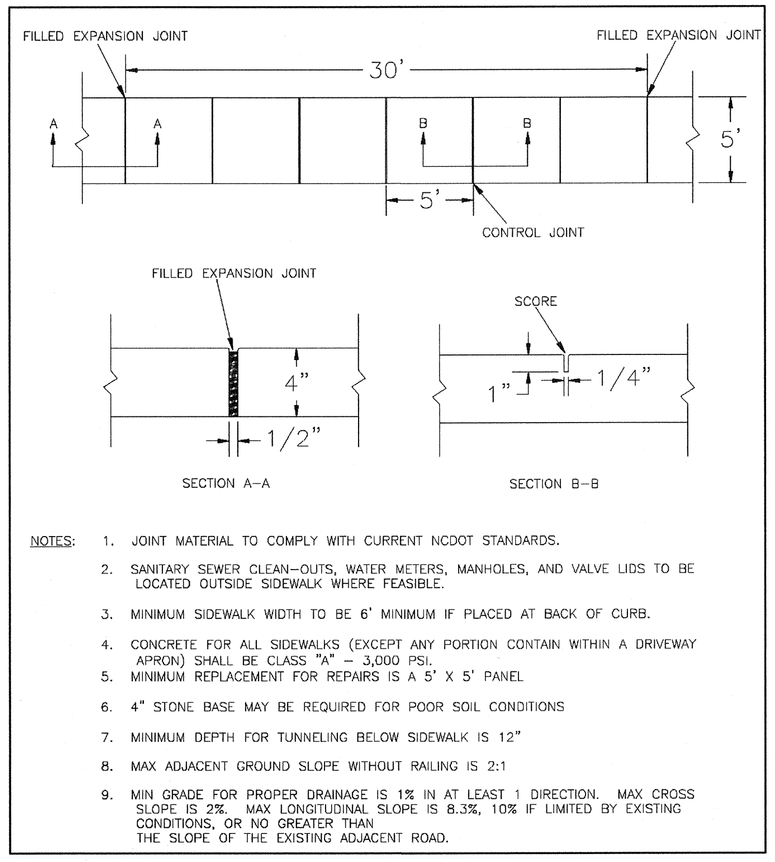

NOTES:
1. JOINT MATERIAL TO COMPLY WITH CURRENT NCDOT STANDARDS.
2. SANITARY SEWER CLEAN-OUTS, WATER METERS, MANHOLES, AND VALVE LIDS TO BE LOCATED OUTSIDE SIDEWALK WHERE FEASIBLE.
3. MINIMUM SIDEWALK WIDTH TO BE 6' MINIMUM IF PLACED AT BACK OF CURB.
4. CONCRETE FOR ALL SIDEWALKS (EXCEPT ANY PORTION CONTAIN WITHIN A DRIVEWAY APRON) SHALL BE CLASS "A" – 3,000 PSI.
5. MINIMUM REPLACEMENT FOR REPAIRS IS A 5' X 5' PANEL
6. 4" STONE BASE MAY BE REQUIRED FOR POOR SOIL CONDITIONS
7. MINIMUM DEPTH FOR TUNNELING BELOW SIDEWALK IS 12"
8. MAX ADJACENT GROUND SLOPE WITHOUT RAILING IS 2:1
9. MIN GRADE FOR PROPER DRAINAGE IS 1% IN AT LEAST 1 DIRECTION. MAX CROSS SLOPE IS 2%. MAX LONGITUDINAL SLOPE IS 8.3%, 10% IF LIMITED BY EXISTING CONDITIONS, OR NO GREATER THAN THE SLOPE OF THE EXISTING ADJACENT ROAD.

NOT TO SCALE

STANDARD SIDEWALK DETAIL

NOTES:
1. SIDEWALK THICKNESS SHALL BE 4" UNLESS NOTED OTHERWISE.
2. CONTRACTION JOINTS (C.J.) SPACE SAME AS SIDEWALK WIDTH.
3. THICKEN SIDEWALK TO 6" AT DRIVEWAYS.
4. THICKEN SIDEWALK TO 6" IN LAST 3' WHERE IT ABUTS PAVEMENT WITH NO CURB.
5. 1/2" EXPANSION JOINT (E.J.) AND SNAP CAP EXPANSION JOINT COVERS ARE REQUIRED AT 50' MAX. AT SIDEWALK JUNCTIONS, AT STRUCTURES, AND AS NOTED ON SITE PLAN. 6. PROVIDE A LAYER OF 15# BLDG. FELT BETWEEN WALK AND ADJACENT PARALLELING CURB OR STRUCTURE.

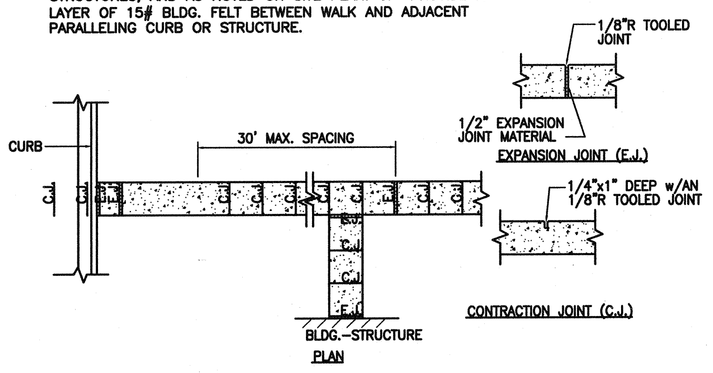

NOT TO SCALE

7 SIDEWALK JOINT DETAIL

CITY OF WILMINGTON STANDARD NOTES:

1. CONTACT THE NORTH CAROLINA ONE CALL CENTER PRIOR TO DOING ANY DIGGING AT 1-800-632-4949.
2. PRIOR TO ANY CLEARING, GRADING OR CONSTRUCTION ACTIVITY, TREE PROTECTION FENCING WILL BE INSTALLED AROUND PROTECTED TREES OR GROVES OF TREES AND NO CONSTRUCTION WORKERS, TOOLS, MATERIALS, OR VEHICLES ARE PERMITTED WITHIN THE TREE PROTECTION FENCING;
3. ALL PAVEMENT MARKINGS IN PUBLIC RIGHTS-OF-WAY AND FOR DRIVEWAYS ARE TO BE THERMOPLASTIC AND MEET CITY AND/OR NCDOT STANDARDS.
4. ALL PARKING STALL MARKINGS AND LANE ARROWS WITHIN THE PARKING AREAS SHALL BE WHITE.
5. INSTALL REFLECTORS PER CITY AND NCDOT STANDARDS. TRAFFIC ENGINEERING MUST APPROVE OF PAVEMENT MARKING LAYOUT PRIOR TO ACTUAL STRIPING.
6. ALL TRAFFIC CONTROL SIGNS AND MARKINGS OFF THE RIGHT-OF-WAY ARE TO BE MAINTAINED BY THE PROPERTY OWNER IN ACCORDANCE WITH MUTCD STANDARDS.
7. TRAFFIC CONTROL DEVICES (INCLUDING SIGNS AND PAVEMENT MARKINGS) IN AREAS OPEN TO PUBLIC TRAFFIC ARE TO MEET MUTCD (MANUAL ON UNIFORM TRAFFIC CONTROL DEVICES) STANDARDS.
8. IT SHALL BE THE RESPONSIBILITY OF THE SUBDIVIDER TO ERECT OFFICIAL STREET NAME SIGNS AT ALL INTERSECTIONS ASSOCIATED WITH THE SUBDIVISION IN ACCORDANCE WITH THE TECHNICAL STANDARDS AND SPECIFICATIONS MANUAL. THE SUBDIVIDER MAY ACQUIRE AND ERECT OFFICIAL STREET NAME SIGNS OR MAY CHOOSE TO CONTRACT WITH THE CITY TO INSTALL THE STREET SIGNS AND THE SUBDIVIDER SHALL PAY THE COST OF SUCH INSTALLATION. CONTACT TRAFFIC ENGINEERING AT 341-7888 TO DISCUSS INSTALLATION OF TRAFFIC AND STREET NAME SIGNS. POSTED STREET NAMES MUST BE APPROVED PRIOR TO INSTALLATION OF STREET NAME SIGNS.
9. CONTACT TRAFFIC ENGINEERING AT 341-7888 FORTY-EIGHT HOURS PRIOR TO ANY EXCAVATION IN THE RIGHT-OF-WAY.
10. A UTILITY CUT PERMIT IS REQUIRED FOR EACH OPEN CUT OF A CITY STREET. CONTACT 341-5888 FOR MORE DETAILS. IN CERTAIN CASES AN ENTIRE RESURFACING OF THE AREA BEING OPEN CUT MAY BE REQUIRED.
11. ANY BROKEN OR MISSING SIDEWALK PANELS, DRIVEWAY PANELS, AND CURBING WILL BE REPLACED.
12. CONTACT TRAFFIC ENGINEERING AT 341-7888 TO DISCUSS STREET LIGHTING OPTIONS.
13. PROJECT SHALL COMPLY WITH CFPUA CROSS CONNECTION CONTROL REQUIREMENTS. WATER METER(S) CANNOT BE RELEASED UNTIL ALL REQUIREMENTS ARE MET AND THE STATE HAS GIVEN THEIR FINAL APPROVAL. CALL 343-3910 FOR INFORMATION.
14. IF THE CONTRACTOR DESIRES CFPUA WATER FOR CONSTRUCTION HE SHALL APPLY IN ADVANCE FOR THIS SERVICE AND MUST PROVIDE A REDUCED PRESSURE ZONE (RPZ) BACKFLOW PREVENTION DEVICE ON THE DEVELOPER'S SIDE OF THE WATER METER BOX.
15. ANY IRRIGATION SYSTEM SUPPLIED BY CFPUA WATER SHALL COMPLY WITH CFPUA CROSS CONNECTION CONTROL REGULATIONS. CALL 332-6558 FOR INFORMATION.
16. ANY BACKFLOW PREVENTION DEVICES REQUIRED BY CFPUA WILL NEED TO BE ON THE LIST OF APPROVED DEVICES BY USCFCCCHR OR ASSE.
17. WHEN PVC WATER MAINS AND/OR POLYETHYLENE SERVICES ARE PROPOSED, THE PIPES ARE TO BE MARKED WITH NO. 10 INSULATED SINGLE STRAND COPPER WIRE INSTALLED THE ENTIRE LENGTH AND SECURED TO ALL VALVES. THIS WIRE IS TO BE ACCESSIBLE AT ALL FIRE HYDRANTS AND WATER METER BOXES TO AID IN FUTURE LOCATION OF FACILITIES.
18. THE NUMBER AND SPACING OF DRIVEWAYS FOR ALL INTERCONNECTED SITES WILL BE DETERMINED BY THE COMBINED FRONTAGE OF THE INTERCONNECTED PROPERTIES.
19. UNDERGROUND FIRE LINE MUST BE PERMITTED AND INSPECTED BY THE WILMINGTON FIRE DEPARTMENT FROM THE PUBLIC ROW TO THE BUILDING. CONTACT THE WILMINGTON FIRE DEPARTMENT DIVISION OF FIRE AND LIFE SAFETY AT 910-343-0696 FOR ADDITIONAL INFORMATION.
20. A LANDSCAPE PLAN INDICATING THE LOCATION OF REQUIRED STREET TREES SHALL BE SUBMITTED TO THE CITY OF WILMINGTON TRAFFIC ENGINEER DIVISION AND PARKS AND RECREATIN DEPARTMENT FOR REVIEW AND APPROVAL PRIOR TO THE RECORDING OF THE FINAL PLAT.
21. IF AND IRRIGATION SYSTEM IS PLANNED FOR THE SITE, UTILIZE MOISTURE SENSORS.
22. ALL PROPOSED VEGETATION WITHIN THE SIGHT TRIANGLES SHALL NOT INTERFERE WITH CLEAR VISUAL SIGHT LINES FROM 30"-10'.
23. PLEASE CONSIDER INCORPORATING XERIC LANDSCAPING FOR ALL NEW LANDSCAPING.

UTILITY NOTES FOR FIRE HYDRANTS:

1. FIRE HYDRANTS MUST BE WITHIN 150' OF THE FIRE DEPARTMENT CONNECTION.
2. THE FIRE DEPARTMENT CONNECTION MUST BE WITHIN 40' OF FIRE APPARATUS PLACEMENT.
3. LANDSCAPING AND PARKING CANNOT BLOCK OR IMPEDE THE FIRE DEPARTMENT CONNECTIONS OR FIRE HYDRANTS. A 3' CLEAR SPACE SHALL BE MAINTAINED AROUND THE CIRCUMFERENCE OF THE FIRE HYDRANT CONNECTION AND THE FIRE HYDRANT.
4. FIRE HYDRANTS MUST BE LOCATED WITHIN 8' OF THE CURB.
5. NEW HYDRANTS MUST BE AVAILABLE FOR USE PRIOR TO CONSTRUCTION OF THE BUILDINGS.
6. NEW HYDRANTS MUST BE BROUGHT INTO SERVICE PRIOR TO COMBUSTIBLE MATERIALS BEING DELIVERED TO THE JOB SITE.
7. THE CONTRACTOR SHALL MAINTAIN AN ALL WEATHER ACCESS FOR EMERGENCY VEHICLES AT ALL TIMES DURING CONSTRUCTION.
8. TEMPORARY STREET SIGNS SHALL BE INSTALLED AT EACH STREET INTERSECTION WHEN CONSTRUCTION OF NEW ROADWAYS ALLOWS PASSAGE BY VEHICLES.
9. UNDERGROUND FIRE LINE AND PRIVATE WATER MAINS MUST BE PERMITTED AND INSPECTED BY THE WILMINGTON FIRE DEPARTMENT FROM THE PUBLIC RIGHT-OF-WAY TO THE BUILDING. CONTACT THE WILMINGTON FIRE DEPARTMENT DIVISION OF FIRE AND LIFE SAFETY AT 910-343-0696 FOR ADDITIONAL INFORMATION.
10. A MINIMUM OF 5' SHALL SEPARATE UNDERGROUND FIRE LINES OR PRIVATE WATER MAINS FROM OTHER UNDERGROUND UTILITIES.
11. HYDRANTS SHALL BE OF SUFFICIENT NUMBERS TO ACCOMODATE BASE FIRE FLOW REQUIREMENTS OF THE STRUCTURE.
12. BUILDING CONSTRUCTION TYPE:

For each open utility cut of City streets, a $325 permit shall be required from the City prior to occupancy and/or project acceptance.

CITY OF WILMINGTON NORTH CAROLINA
Public Services • Engineering Division
APPROVED STORMWATER MANAGEMENT PLAN
Date:_____ Permit #_____
Signed: _____

Approved Construction Plan

	Name	Date
Planning		
Traffic		
Fire		

SYMBOL	DATE	DESCRIPTION	BY

REVISIONS

© 2014 NORRIS & TUNSTALL

LAYOUT PLAN
NHRMC EMPLOYEE PARKING DECK
2120 SOUTH 17TH STREET
WILMINGTON, N. C.

OWNER/DEVELOPER
CAMERON COMPANY, LLC
WILLIAM H. CAMERON, MANAGER
P.O. BOX 3649
WILMINGTON, NC 28406
910 762-2676

NORRIS & TUNSTALL
CONSULTING ENGINEERS, P.C.
902 MARKET STREET
WILMINGTON, NC 28401
PHONE (910) 343-9653
1429 ASH-LITTLE RIVER RD. NW
ASH, NC 28420
PHONE (910) 287-5900
licence #C-3641

16077

DES.	JST
CKD.	JPN
DRWN.	NKS
DATE	8/29/16

NORTH CAROLINA PROFESSIONAL ENGINEER SEAL W. S. TUNSTALL PRELIMINARY

C4

F:\Projects\2016\16052 NHRMC Parking Deck\16052 Plans\dwg\16052.master.R2.dwg, 8/30/2016 9:22:40 AM

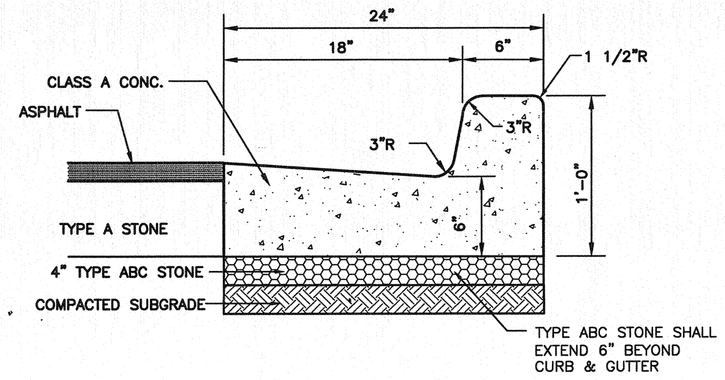

NOTE: CURB TYPE DEPENDS ON GRADES SHOWN ON GRADING PLAN. GRADES INDICATING FALL AWAY FROM CURB SHALL BE SPILL OFF TYPE CURB. GRADES INDICATING CURB ACCEPTING FLOW SHALL BE FLOW LINE TYPE.

NOT TO SCALE

1 24" CURB AND GUTTER SECTION (FLOW-LINE)

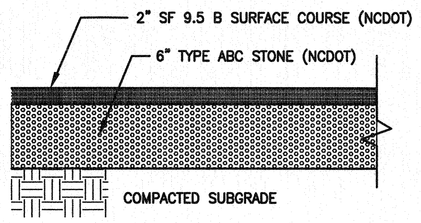

NOTE: PAVEMENT SECTION MAY VARY DEPENDING UPON FIELD CONDITIONS. CONTRACTOR SHALL COORDINATE w/OWNER & GEOTECHNICAL ENGINEER TO DETERMINE ACTUAL PAVEMENT SECTION.

NOT TO SCALE

2 ASPHALT PAVEMENT SECTION

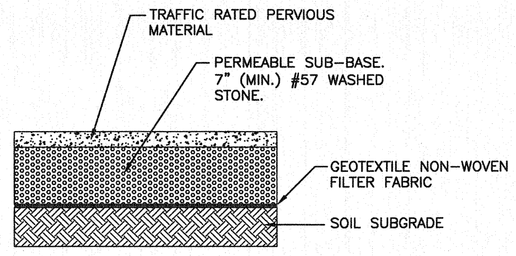

NOTES:

1. TRAFFIC RATED PERVIOUS MATERIALS SHALL BE INSTALLED PER MANUFACTURERS RECOMMENDATIONS.

2. PERVIOUS MATERIALS SECTION MAY VARY DEPENDING UPON FIELD CONDITIONS. THE CONTRACTOR SHALL COORDINATE WITH HOME OWNERS ASSOCIATION ARCHITECTURAL REVIEW BOARD TO DETERMINE ACTUAL PAVEMENT SECTION.

NOT TO SCALE

3 PERVIOUS CONCRETE PAVEMENT SECTION

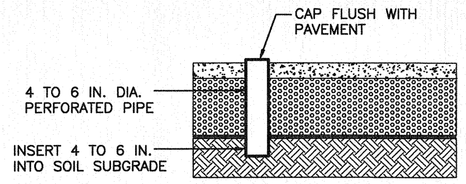

PERVIOUS PAVEMENT OBSERVATION WELL NOTES:

1. IF THE SUBGRADE IS NOT TERRACED, THEN THE OBSERVATION WELL SHALL BE PLACED AT THE LOW END OF THE SUBGRADE SLOPE. IF THE SUBGRADE IS TERRACED, THEN ONE OBSERVATION WELL SHALL BE BUILT INTO THE LOW END OF EACH TERRACE.
2. OBSERVATION WELLS SHALL BE FITTED WITH A LOCKABLE CAP INSTALLED PLACED EVEN WITH THE PAVEMENT SURFACE TO FACILITATE QUARTERLY INSPECTION AND MAINTENANCE.
3. THE OBSERVATION WELL SHALL CONSIST OF A RIGID 4 TO 6 IN. DIAMETER PERFORATED PVC PIPE.

NOT TO SCALE

4 PERVIOUS PAVEMENT OBSERVATION WELL DETAIL

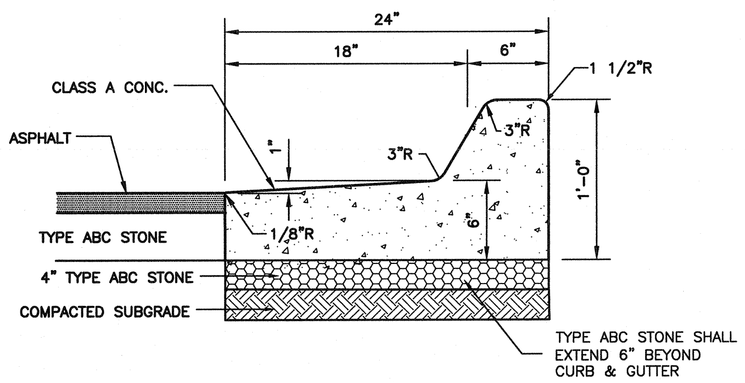

NOTE: CURB TYPE DEPENDS ON GRADES SHOWN ON GRADING PLAN. GRADES INDICATING FALL AWAY FROM CURB SHALL BE SPILL OFF TYPE CURB. GRADES INDICATING CURB ACCEPTING FLOW SHALL BE FLOW LINE TYPE.

NOT TO SCALE

5 24" CURB AND GUTTER SECTION (SPILL-OFF)

6

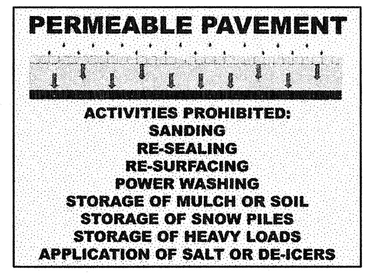

NOTES:
1. THE PERMEABLE PAVEMENT SIGN IS BASED ON AN 18" X 24" STANDARD SIZE FOR SIGN PRODUCTION.
2. A HIGH-RESOLUTION IMAGE FILE CAN BE PROVIDED BY THE DWQ FOR USE IN FABRICATING THE SIGN. THE GRAFFIC IS IN COLOR BUT COLOR SIGNS ARE NOT REQUIRED.

7 PERMEABLE PAVEMENT SIGNAGE DETAIL

PERMEABLE PAVEMENT CONSTRUCTION SEQUENCE:

The following is a typical construction sequence to properly install pervious concrete. The means and methods of installation shall be determined by the contractor and shall be installed per the manufacturer recommendations, product standards and industry guidelines.

Step 1. Construction of the permeable pavement shall only begin after the entire contributing drainage area has been stabilized. The proposed site should be checked for existing utilities prior to any excavation. Do not install the system in rain or snow.

Step 2. Temporary erosion and sediment (E&S) controls (silt fence) are needed during installation to divert stormwater away from the permeable pavement area until it is completed. The proposed permeable pavement area must be kept free from sediment during the entire construction process. Construction materials that are contaminated by sediments must be removed and replaced with clean materials.

Step 3. Where possible, excavators or backhoes should work from the sides to excavate the aggregate layer to its appropriate design depth and dimensions.

Step 4. In-situ soil testing shall be done after excavation to verify existing infiltration rate. Soils testing shall be conducted by an appropriately qualified professional, the testing can be done by the contractor, the designer, or a third party hired by owner. The results of the testing shall be given to the designer of record for review. If results show a lower infiltration rate than the rate of design the depth of aggregate must be revised.

Step 5. The native soils along the bottom and sides of the permeable pavement system should be scarified or tilled to a depth of 3 to 4 inches prior to the placement of the filter layer or filter fabric.

Step 6. Filter fabric should be installed on the bottom and the sides of the aggregate layer.

Step 7. Place observation wells as shown on plans.

Step 8. Inspect all aggregate prior to placement. Ensure aggregate is clean, free of fines and conform to the plans and specifications. All aggregate shall be spread (not dumped). Moisten and spread the washed stone without driving on the soil subgrade, being careful not to damage the observation wells. Follow compaction recommendations by the permeable pavement manufacturer or that from industry guidelines.

Step 9. Ensure edge restraints and barriers between permeable pavement are installed per design.

Step 10. Contractor is to follow standard installation procedures for the specific type of pervious pavement that is being installed. For this project pervious concrete will be installed. Only certified and experienced contractors shall install the pervious concrete and installation shall be per the manufacturer recommendations, product standards and industry guidelines. Pervious concrete shall be constructed in accordance with the latest version of ACI 522.1, Specifications for Pervious Concrete.

Step 11. After installation, protect the installed pervious concrete until project completion, including routing construction traffic away from the installed pervious concrete. Contractor shall provide protection techniques including mats, plastic sheeting and barriers to ensure the pervious concrete remains protected until project completion.

8

9

10

11

SYMBOL	DATE	DESCRIPTION	BY

REVISIONS

© 2015 NORRIS & TUNSTALL

LAYOUT PLAN
NHRMC EMPLOYEE PARKING DECK
2120 SOUTH 17TH STREET
WILMINGTON, N. C.

OWNER/DEVELOPER
CAMERON COMPANY, LLC
WILLIAM H. CAMERON, MANAGER
P.O. BOX 3649
WILMINGTON, NC 28406
910 762-2676

NORRIS & TUNSTALL
CONSULTING ENGINEERS, P.C.
902 MARKET STREET
WILMINGTON, NC 28401
PHONE (910) 343-9653
1429 ASH-LITTLE RIVER RD. NW
ASH, NC 28420
PHONE (910) 287-5900
licence #C-3641

16077

DES. JST
CKD. JPN
DRWN. NKS
DATE 8/29/16

NORTH CAROLINA PROFESSIONAL ENGINEER SEAL
PRELIMINARY
N. S. TUNSTALL

C5

F:\Projects\2016\16052 NHRMC Parking Deck\16052 Plans\dwg\16052.master.R2.dwg, 8/30/2016 9:22:49 AM

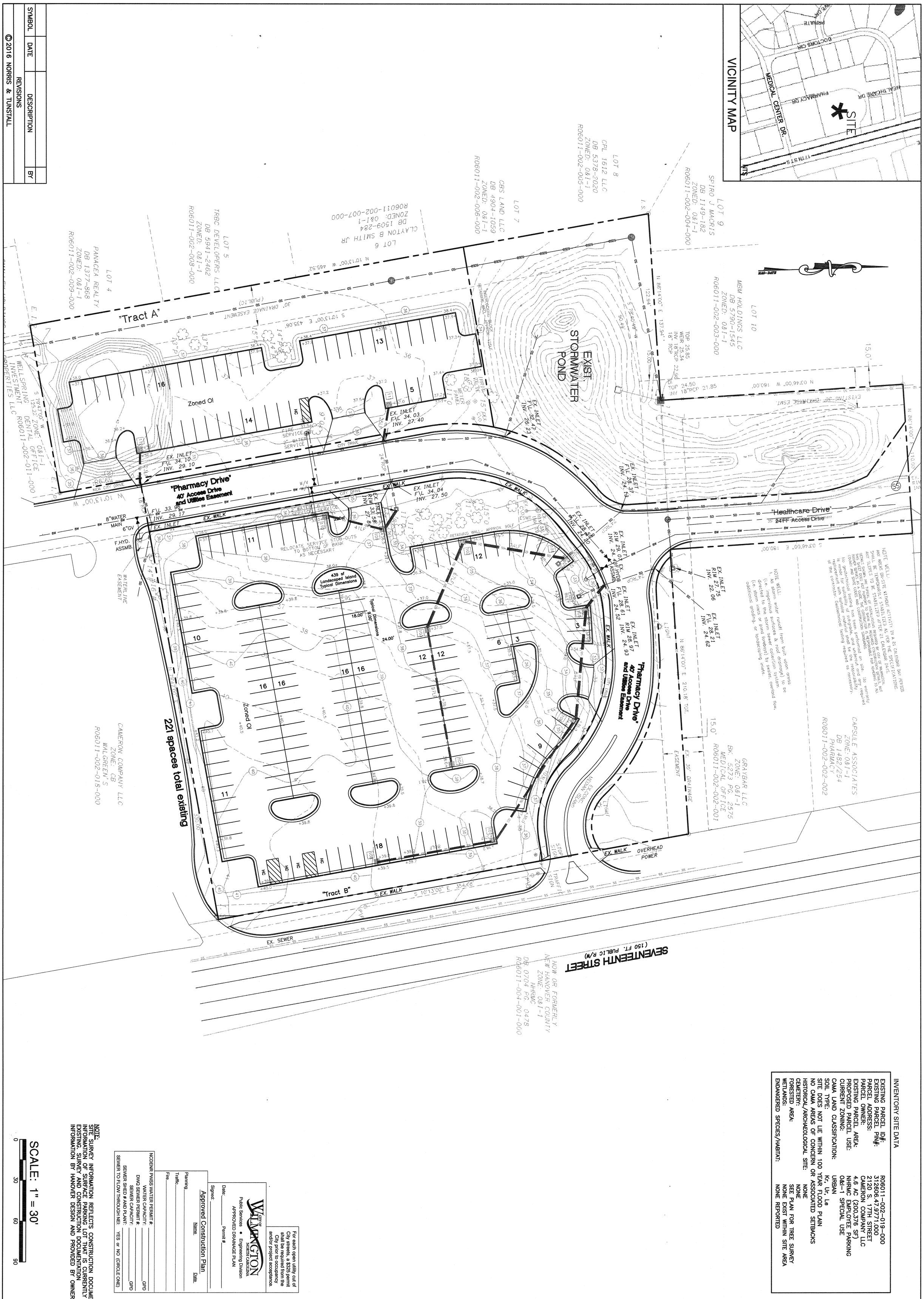

NOTE WELL:
ANY AREAS ON-SITE WITHOUT ACTIVITY IN A 21 CALENDAR DAY PERIOD SHALL BE TEMPORARILY STABILIZED AS PER THE SPECIFICATIONS. ANY SLOPES TO BE STABILIZED AFTER 21 CALENDAR DAYS.
DETAILS SHOWN ARE TYPICAL OF THE REGULATIONS REQUIRED BY CITY OF WILMINGTON. THIS SHEET DOES NOT PURPORT TO SHOW ALL OR ANY DETAILS, BUT SERVES AS A GUIDE AND CONSTRUCTION STANDARDS.
NO GEOTECHNICAL TESTING HAS BEEN PERFORMED ON SITE. NO WARRANTY IS MADE FOR SUITABILITY OF SUBGRADE, AND UNDERCUT AND ANY REQUIRED REPLACEMENT WITH SUITABLE MATERIAL SHALL BE THE RESPONSIBILITY OF THE CONTRACTOR. GEOTECHNICAL TESTING REQUIRED AS NECESSARY.

NOTE WELL:
1. All storm water runoff from built upon areas (i.e. impervious surfaces & roof drainage) to be directed to the storm sewer collection system (i.e. storm inlets or pond forebays) by swales, overland flow, additional grading, or landscaping inlets.

INVENTORY SITE DATA

EXISTING PARCEL ID#:	R06011-002-019-000
EXISTING PARCEL PIN#:	312606.47.9771.000
PARCEL ADDRESS:	2120 S. 17TH STREET
PARCEL OWNER:	CAMERON COMPANY LLC
EXISTING PARCEL AREA:	4.6 AC (200,376 SF)
PROPOSED PARCEL USE:	NHRMC EMPLOYEE PARKING
CURRENT ZONING:	O&I-1 SPECIAL USE
CAMA LAND CLASSIFICATION:	URBAN
SOIL TYPE:	Kr, Ur, Le
SITE DOES NOT LIE WITHIN 100 YEAR FLOOD PLAIN	
NO CAMA AREAS OF CONCERN OR ASSOCIATED SETBACKS	
HISTORICAL/ARCHAEOLOGICAL SITE:	NONE
CEMETERY:	NONE
FORESTED AREA:	SEE PLAN FOR TREE SURVEY
WETLANDS:	NONE EXIST WITHIN SITE AREA
ENDANGERED SPECIES/HABITAT:	NONE REPORTED

For each open utility cut of City streets, a $325 permit shall be required from the City prior to occupancy and/or project acceptance.

CITY OF WILMINGTON NORTH CAROLINA
Public Services • Engineering Division
APPROVED DRAINAGE PLAN
Date: _____ Permit # _____
Signed: _____

Approved Construction Plan

	Name	Date
Planning		
Traffic		
Fire		

NCDENR PWSS WATER PERMIT #:		
WATER CAPACITY:		GPD
DWQ SEWER PERMIT #:		
SEWER CAPACITY:		GPD
SEWER SHED # AND PLANT:		
SEWER TO FLOW THROUGH NEI:	YES or NO (CIRCLE ONE)	

NOTE:
SITE SURVEY INFORMATION REFLECTS CONSTRUCTION DOCUMENT INFORMATION OF SURFACE PARKING LOT THAT IS CURRENTLY EXISTING. SURVEY AND CONSTRUCTION DOCUMENTATION INFORMATION BY HANOVER DESIGN AND PROVIDED BY OWNER.

SCALE: 1" = 30'
0 30 60 90

SYMBOL	DATE	DESCRIPTION	BY

REVISIONS

© 2016 NORRIS & TUNSTALL

NORRIS & TUNSTALL
CONSULTING ENGINEERS, P.C.
902 MARKET STREET
WILMINGTON, NC 28401
PHONE (910) 343-9653
1429 ASH-LITTLE RIVER RD. NW
ASH, NC 28420
PHONE (910) 287-5900
licence #C-3641

OWNER/DEVELOPER
CAMERON COMPANY, LLC
WILLIAM H. CAMERON, MANAGER
P.O. BOX 3649
WILMINGTON, NC 28406
910 762-2676

SITE INVENTORY PLAN
NHRMC EMPLOYEE PARKING DECK
2120 SOUTH 17TH STREET

WILMINGTON, N. C.

NORTH CAROLINA PROFESSIONAL ENGINEER N. S. TUNSTALL
PRELIMINARY

16077	
DES.	JST
CKD.	JPN
DRWN.	NKS
DATE	8/29/16

11