LEGEND

△	SURVEY CONTROL POINT	EB	ELECTRIC BOX
EIP	EXISTING IRON PIPE		LIGHT POLE
ECM	EXISTING CONCRETE MONUMENT		SIGN
	STORM DRAIN MANHOLE		DECIDUOUS TREE
	STORM DRAIN INLET		EVERGREEN TREE
	STORM DRAIN CURB INLET		TREELINE
	STORM DRAIN FLARED END SECTION	FO	UNDERGROUND FIBER OPTIC LINE
S	SANITARY SEWER MANHOLE	E	UNDERGROUND ELECTRIC LINE
	HYDRANT	W	UNDERGROUND WATER LINE
WV	WATER VALVE	SS	SANITARY SEWER LINE
WM	WATER METER		STORM DRAIN LINE
TPED	TELEPHONE PEDESTAL		STORM DRAIN LINE
FO	FIBER OPTIC BOX		UNKNOWN DESTINATION
PVC	POLYVINYL CHLORIDE PIPE		CONCRETE SURFACE
HDPE	HIGH-DENSITY POLYETHYLENE PIPE	DIP	DUCTILE IRON PIPE
RCP	REINFORCED CONCRETE PIPE	CMP	CORRUGATED METAL PIPE

GENERAL NOTES

1. THIS SURVEY MAP IS INTENDED TO REPRESENT THE EXISTING CONDITIONS/TOPOGRAPHY ON A THE PROPERTY KNOWN AS 1415 PHYSICIANS DR (PARCEL ID R06015-001-022-000 AND R0615-001-023-000, AND IS NOT A BOUNDARY SURVEY. THIS SURVEY WAS PERFORMED WITHOUT THE BENEFIT OF A TITLE REPORT AND THEREFORE ALL ENCUMBRANCES UPON THE PROPERTY MAY NOT BE SHOWN.
2. THE PROPERTY LINES SHOWN HEREON HAVE BEEN CONFIRMED FROM A PARTIAL SURVEY BY STEWART ENGINEERING. PROPERTY LINES SHOWN TAKEN FROM BOOK OF MAPS 37, PAGE 38.
3. HORIZONTAL DATUM IS NAD 83 (2001) AND VERTICAL DATUM IS NAVD88, BASED ON ORIGINAL CONTROL FROM A PREVIOUS STEWART SURVEY ON 2/6/06, ENTITLED PLAT SURVEY FOR: NEW HANOVER HEALTH NETWORK."

"OVERNIGHT"	"STA-1"
N 161,005.78'	N 161,008.00'
E 2323009.58'	E 2324661.45'
	EL 26.87'

4. THIS DRAWING DOES NOT CONFORM TO N.C. GS47-30 AND THEREFORE IS NOT FOR RECORDATION.
5. UTILITIES SHOWN HEREON ARE BASED SOLELY ON ABOVE-GROUND VISIBLE EVIDENCE AND UTILITY DESIGNATION/MARKING SERVICES. CONTRACTOR SHALL FIELD VERIFY THE LOCATION OF ALL UTILITIES BEFORE COMMENCING CONSTRUCTION.
6. WATERLINE SHOWN HEREON IS FROM 2006 STEWART SURVEY. EFFORTS TO GAIN SIGNAL ON WATERLINE WERE UNSUCCESSFUL DURING THIS SURVEY.
7. TREES SHOWN HEREON MAY NOT REPRESENT ALL VEGETATION ON THE SUBJECT PROPERTY.
8. THE SUBJECT PROPERTY IS ZONED "O&I" (OFFICE AND INSTITUTION).
9. THE SUBJECT PROPERTY LIES IN ZONES X (AREA DETERMINED TO BE OUTSIDE THE 0.2% ANNUAL CHANCE AND FUTURE CONDITIONS 1% ANNUAL CHANCE FLOODPLAIN). BASED ON THE FLOOD INSURANCE RATE MAP COMMUNITY MAP NUMBER 37203126000J DATED 4/3/06.
10. ADDRESS: 1415 PHYSICIANS DRIVE.

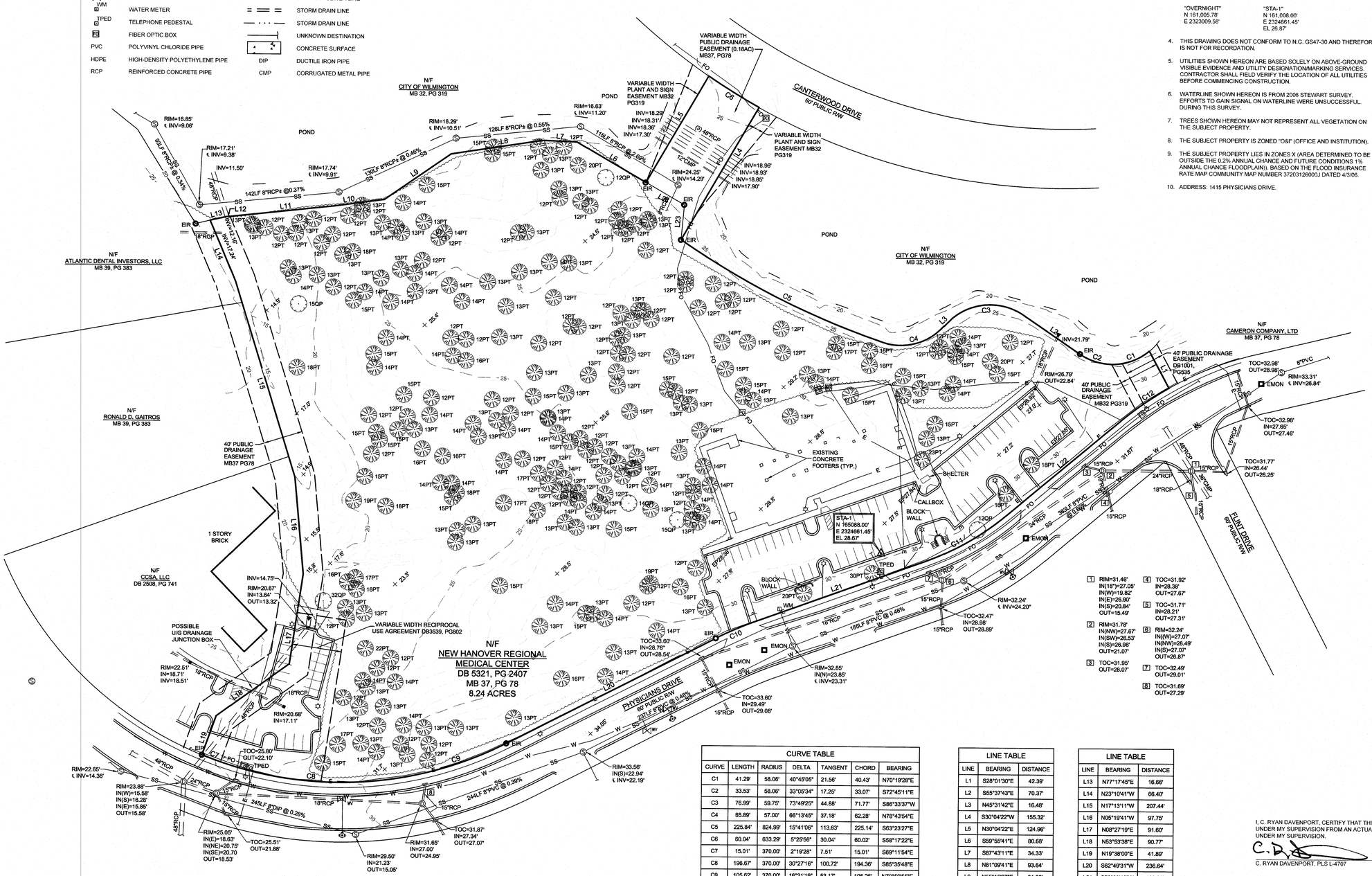

CURVE TABLE

CURVE	LENGTH	RADIUS	DELTA	TANGENT	CHORD	BEARING
C1	41.29'	58.06'	40°45'05"	21.56'	40.43'	N70°19'28"E
C2	33.53'	58.06'	33°05'34"	17.25'	33.07'	S72°45'11"E
C3	76.99'	59.75'	73°49'25"	44.88'	71.77'	S86°33'37"W
C4	65.89'	57.00'	66°13'45"	37.18'	62.28'	N78°43'54"E
C5	225.84'	824.99'	15°41'06"	113.63'	225.14'	S63°23'27"E
C6	60.04'	633.29'	5°25'56"	30.04'	60.02'	S58°17'22"E
C7	15.01'	370.00'	2°19'28"	7.51'	15.01'	S69°11'54"E
C8	196.67'	370.00'	30°27'16"	100.72'	194.36'	S85°35'48"E
C9	105.62'	370.00'	16°21'19"	53.17'	105.26'	N70°59'55"E
C10	42.25'	330.00'	7°20'07"	21.15'	42.22'	S66°29'36"W
C11	95.16'	270.00'	20°11'38"	48.08'	94.67'	N60°03'52"E
C12	59.13'	330.00'	10°15'58"	29.64'	59.05'	S55°05'33"W

LINE TABLE

LINE	BEARING	DISTANCE
L1	S28°01'30"E	42.39'
L2	S55°37'43"E	70.37'
L3	N45°31'42"E	16.48'
L4	S30°04'22"W	155.32'
L5	N30°04'22"E	124.96'
L6	S59°55'41"E	80.68'
L7	S87°43'11"E	34.33'
L8	N81°09'41"E	93.64'
L9	N55°15'07"E	81.82'
L10	N82°16'15"E	50.33'
L11	N83°41'27"E	106.56'
L12	N83°41'27"E	3.78'

LINE TABLE

LINE	BEARING	DISTANCE
L13	N77°17'45"E	16.68'
L14	N23°10'41"W	66.40'
L15	N17°13'11"W	207.44'
L16	N05°19'41"W	97.75'
L17	N08°27'19"E	91.60'
L18	N53°53'38"E	90.77'
L19	N19°38'00"E	41.89'
L20	S62°49'31"W	236.64'
L21	S70°09'40"W	183.05'
L22	S49°58'04"W	148.98'
L23	N05°02'06"E	35.41'
L24	N59°51'08"W	45.00'

I, C. RYAN DAVENPORT, CERTIFY THAT THIS PLAT WAS DRAWN UNDER MY SUPERVISION FROM AN ACTUAL SURVEY MADE UNDER MY SUPERVISION.

C. Ryan Davenport 2/26/13

C. RYAN DAVENPORT, PLS L-4707

STEWART

421 FAYETTEVILLE ST, STE 400
RALEIGH, NC 27601
T.919.380.8750

FIRM LICENSE #: C-1051
www.stewartinc.com
PROJECT #: G13011

Vicinity Map:

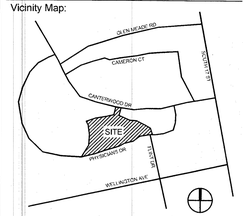

NAD83-2001

GRAPHIC SCALE

50 0 25 50 100

(IN FEET)
1 inch = 50 ft.

Title:

TOPOGRAPHIC/EXISTING CONDITIONS SURVEY FOR:

NEW HANOVER REGIONAL MEDICAL CENTER

WILMINGTON, NORTH CAROLINA

DATE: 2/21/13 SCALE: "=50'

CONTOUR INTERVAL = 1 FOOT

Revisions:

No.	Date	Description

Seal:

NORTH CAROLINA PROFESSIONAL L-4707 SURVEYOR C. RYAN DAVENPORT SEAL 2.25.13

Project number: G13011 Sheet: 1 OF 1
Date: 02/21/2013
Drawn by: CRD
Approved by: CRD

V1

S:\2013\G13011 - NHRMC Physicians Drive\DWG\G13011EX.dwg Feb 25, 2013 - 8:37am

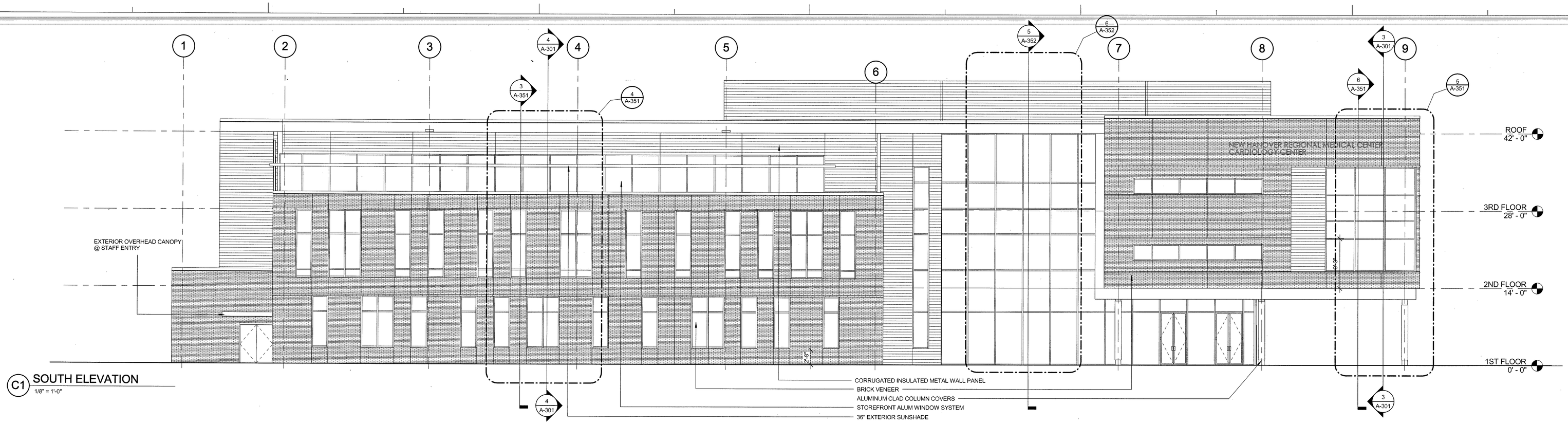

C1 SOUTH ELEVATION
1/8" = 1'-0"

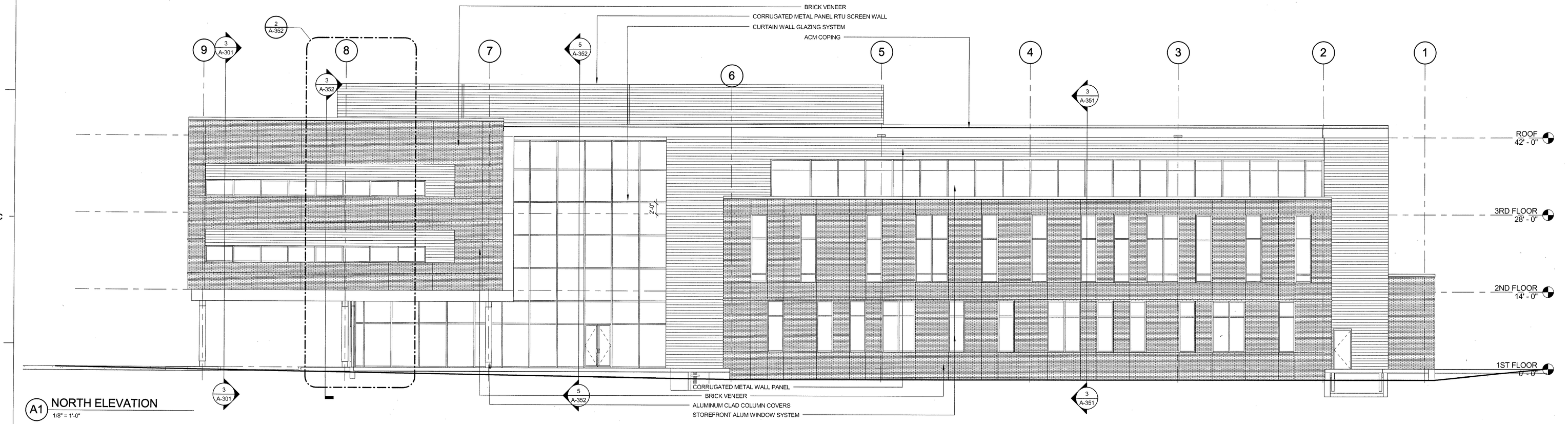

A1 NORTH ELEVATION
1/8" = 1'-0"

1 EAST ELEVATION
1/8" = 1'-0"

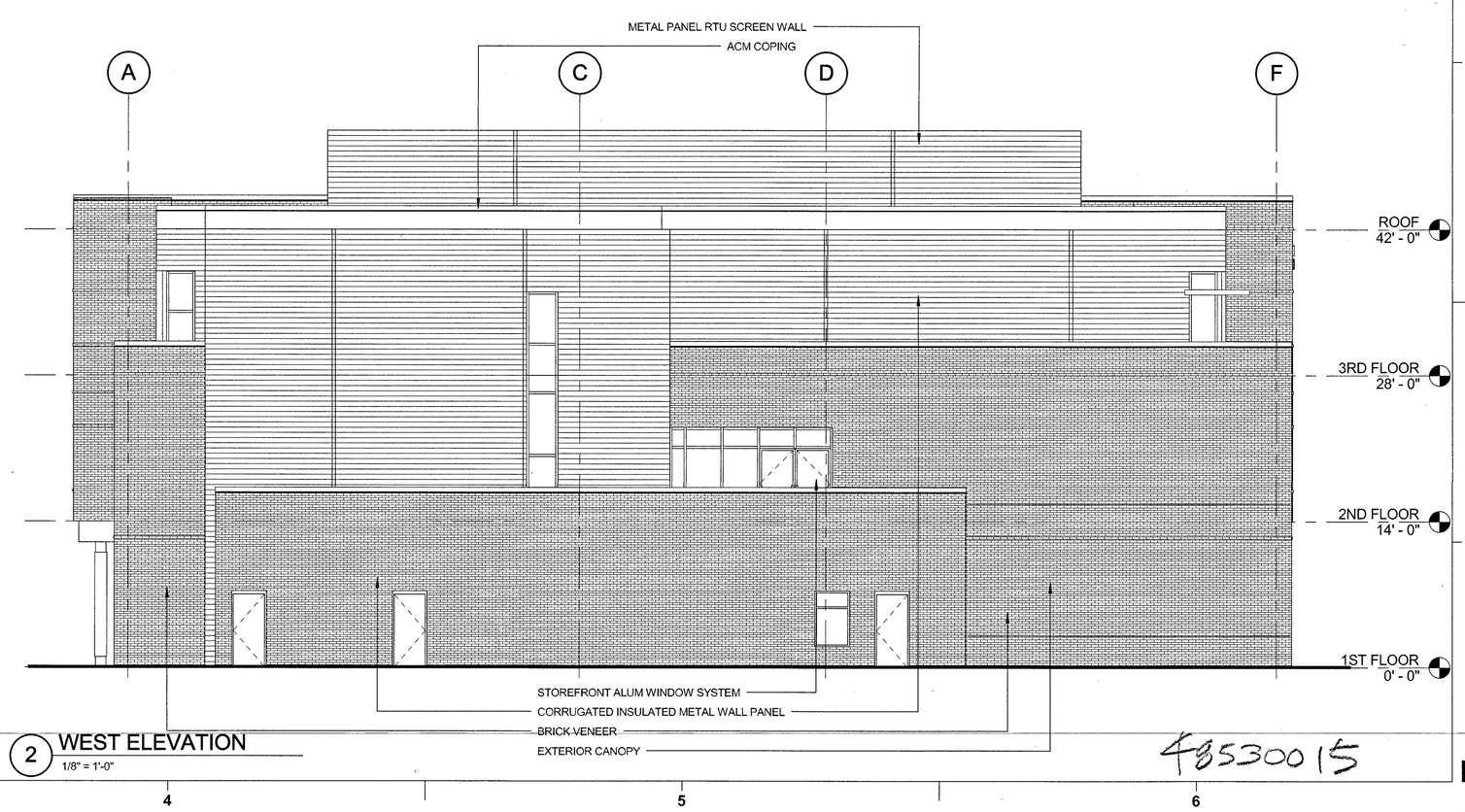

2 WEST ELEVATION
1/8" = 1'-0"

4853001S

NHRMC CARDIOLOGY CENTER

LS3P ASSOCIATES LTD.
2528 INDEPENDENCE BLVD. SUITE 200
WILMINGTON, NORTH CAROLINA 28412
TEL. 910.790.9901 FAX 910.790.3111
WWW.LS3P.COM

MEMBERS OF THE AMERICAN INSTITUTE OF ARCHITECTS

COPYRIGHT 2011 ALL RIGHTS RESERVED
PRINTED OR ELECTRONIC DRAWINGS AND DOCUMENTATION MAY NOT BE REPRODUCED IN ANY FORM WITHOUT WRITTEN PERMISSION FROM LS3P ASSOCIATES LTD.

REVISIONS:

No.	Description	Date

PROJECT: 7401-123810
DATE: 28 FEBRUARY 2013
DRAWN BY: JST
CHECKED BY: CDA

EXTERIOR ELEVATIONS

A-201

DESIGN DEVELOPMENT

C:\Users\joshuathomasson\Documents\Arch_NHRMC Cardiology Outpatient Clinic_2013_joshuathomasson.rvt
2/25/2013 1:15:53 PM

TRC SUBMITTAL

NHRMC CARDIOLOGY OUTPATIENT CLINIC

FOR

LS3P ASSOCIATES, LTD.

CITY OF WILMINGTON, NORTH CAROLINA

FEBRUARY 27, 2013 - DESIGN DEVELOPMENT

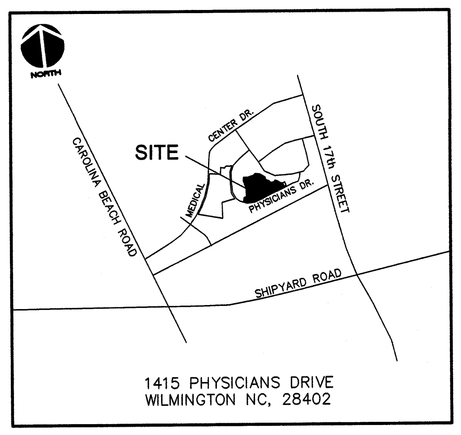

VICINITY MAP
NOT TO SCALE

SHEET INDEX

FILE #	DESCRIPTION
G-001	COVER
CR-001	GENERAL NOTES
CX-101	EXISTING CONDITIONS-SITE INVENTORY MAP
CD-101	DEMOLITION PLAN
CS-101	SITE PLAN
CE-101	SEDIMENT & EROSION CONTROL PLAN
CG-101	GRADING AND STORM DRAINAGE PLAN
CU-101	UTILITY PLAN
CL-101	LANDSCAPE PLAN
CS-501	SITE DETAILS
CE-501	SEDIMENT & EROSION CONTROL DETAILS
CG-501	STORM DRAINAGE & GRADING DETAILS
CU-501	UTILITY DETAILS
CL-501	LANDSCAPE DETAILS

REVISIONS:

No.	Description	Date
0	DESIGN DEVELOPMENT	02/27/2013

PROPERTY OWNER

(FINANCIALLY RESPONSIBLE PARTY):

NEW HANOVER REGIONAL MEDICAL CENTER
ATTN: CHRISTINA MAROULIS-OLLIE
2131 S. 17TH ST.
PO BOX 9000
WILMINGTON, NC 28401
(P) 910-343-7000

ARCHITECT:

LS3P ASSOCIATES, LTD.
2528 INDEPENDENCE BLVD., SUITE 200
WILMINGTON, NORTH CAROLINA 28412
(P) 910-790-9901
(F) 910-790-3111

CIVIL ENGINEER / LANDSCAPE ARCHITECT:

McKIM & CREED, INC
243 NORTH FRONT STREET
WILMINGTON, NORTH CAROLINA 28401
(P) 910-343-1048
(F) 910-251-8282

NORTH CAROLINA PROFESSIONAL ENGINEER SEAL 025003 RICHARD A. MOORE 9/12

Approved Construction Plan

	Name	Date
Planning		
Traffic		
Fire		

1 inch

STORMWATER MANAGEMENT PLAN
APPROVED
CITY OF WILMINGTON
ENGINEERING DEPARTMENT
DATE _____ PERMIT # _____
SIGNED _____

For each open utility cut of City streets, a $325 permit shall be required from the City prior to occupancy and/or project acceptance.

CALL NC ONE CALL BEFORE YOU DIG
STOP
1-800-632-4949
AVOID UTILITY DAMAGE

PHONE# 1(800)632-4949

McKIM & CREED
243 NORTH FRONT STREET
WILMINGTON, NORTH CAROLINA 28401
PHONE: (910)343-1048, FAX: (910)251-8282
NC LICENSE# F-1222

www.mckimcreed.com

LS3P ASSOCIATES LTD.
2528 INDEPENDENCE BLVD. SUITE 200
WILMINGTON, NORTH CAROLINA 28412
TEL. 910.790.9901 FAX 910.790.3111
WWW.LS3P.COM

DEMOLITION NOTES:

1. THE CONTRACTOR IS RESPONSIBLE FOR FIELD VERIFYING AND FIELD DETERMINING THE EXACT DEMOLITION LIMITS. QUESTIONS DURING BIDDING SHALL BE DIRECTED TO THE ARCHITECT.
2. THE CONTRACTOR SHALL VISIT THE SITE TO BECOME FAMILIARIZED WITH FIELD DEMOLITION CONDITIONS.
3. THE CONTRACTOR IS RESPONSIBLE FOR THE PROPER DISPOSAL OF ALL DEMOLISHED DEBRIS ASSOCIATED WITH THE PROJECT.
4. THE CONTRACTOR IS RESPONSIBLE FOR CONTROLLING DUST GENERATED BY THE WORK, INCLUDING BUT NOT LIMITED TO DEMOLITION AND CONSTRUCTION ACTIVITIES, SITE VEHICULAR TRAFFIC AND RELATED OPERATIONS.
5. THE CONTRACTOR IS RESPONSIBLE FOR HAVING ALL EXISTING UTILITIES LOCATED PRIOR TO BEGINNING ANY DEMOLITION. CONTRACTOR SHALL NOTIFY NC ONE CALL PRIOR TO BEGINNING CONSTRUCTION OR EXCAVATION TO HAVE EXISTING UTILITIES LOCATED.
6. EXISTING UTILITIES AND STRUCTURES SHOWN ARE BASED ON FIELD SURVEY. THE CONTRACTOR SHALL VERIFY FIELD CONDITIONS PRIOR TO BEGINNING RELATED CONSTRUCTION. ANY DISCREPANCIES SHALL BE REPORTED TO THE ARCHITECT AND ENGINEER IMMEDIATELY.
7. THE CONTRACTOR IS RESPONSIBLE FOR THE COORDINATION OF DISCONNECTING AND ABANDONING ALL EXISTING UTILITIES UNLESS OTHERWISE NOTED. ALL EXISTING UTILITIES AND ASSOCIATED PIPING, ETC. NOT IN USE ON THE SITE SHALL BE PROPERLY ABANDONED AND REMOVED.
8. THE CONTRACTOR IS RESPONSIBLE FOR THE PROTECTION OF ANY EXISTING UTILITIES THAT REMAIN IN SERVICE DURING DEMOLITION.
9. THE CONTRACTOR IS RESPONSIBLE FOR COORDINATING THE REMOVAL OR RELOCATION OF ANY EXISTING UTILITY POLES/GUY LINES, LIGHT POLES, TELEPHONE PEDESTALS. THE GENERAL CONTRACTOR IS RESPONSIBLE FOR CONTACTING THE APPLICABLE UTILITY COMPANY AS REQUIRED.
10. THE CONTRACTOR IS RESPONSIBLE FOR STABILIZATION OF ALL DISTURBED AREAS AND SLOPES ON AND OFF SITE IN ACCORDANCE WITH THE EROSION CONTROL MEASURES SPECIFIED ON THE PLANS AND IN THE SPECIFICATIONS. THE CONTRACTOR SHALL COORDINATE WITH THE OWNER TO DETERMINE WHO IS RESPONSIBLE FOR PROVIDING THE PERMANENT STABILIZATION MEASURES AND THE TYPE OF PERMANENT MEASURES PRIOR TO BEGINNING DEMOLITION AND CONSTRUCTION. THE PERMANENT STABILIZATION MEASURES SHALL BE IN PLACE AND ACCEPTABLE TO THE OWNERS REPRESENTATIVE AND ENGINEER PRIOR TO PROJECT CLOSEOUT. COORDINATE INSPECTION WITH THE OWNER AND ENGINEER PRIOR TO PROJECT CLOSEOUT.
11. THE CONTRACTOR IS RESPONSIBLE FOR COORDINATING AND CONTACTING THE ENGINEER FOR THE REQUIRED INSPECTIONS ON THE PROJECT.
12. WETLANDS DO NOT EXIST ON SITE.
13. CITY OF WILMINGTON TEMPORARY METER REMOVAL POLICY MUST BE ADHERED TO IF CONSTRUCTION OR CONSTRUCTION LAYDOWN AREA REQUIRES THE USE OF PUBLIC SPACES CONTAINING PARKING METERS.
14. THE SITE DEMOLITION CONTRACTOR SHALL REMOVE AND DELIVER TO THE OWNER, IN WORKING CONDITION, ALL ITEMS AS INDICATED ON THE DRAWINGS. THE SITE DEMOLITION CONTRACTOR SHALL TEST THE EXISTING LIGHTING SYSTEM PRIOR TO PERFORMING ANY WORK ON THE SYSTEM AND IDENTIFY ALL DEFECTIVE COMPONENTS AND DAMAGE IN WRITING TO THE ARCHITECT/ENGINEER. IF NONE ARE IDENTIFIED, THE EXISTING SALVAGED FIXTURES AND POLES WILL BE CONSIDERED DAMAGE FREE AND OPERATIONAL AND ANY DAMAGE NOTED AFTER REMOVAL WILL BE CONSIDERED A RESULT OF CONTRACTOR OPERATIONS AND WILL BE REPAIRED OR REPLACED BY THE CONTRACTOR. THE SITE DEMOLITION CONTRACTOR SHALL REMOVE ALL EXISTING UNDERGROUND RACEWAYS AND CONDUCTORS FEEDING THE EXISTING SITE LIGHTING FIXTURES. THE EXISTING ELECTRICAL FEEDER FOR THE SITE LIGHTING WILL BE DE-ENERGIZED BY THE ELECTRICAL CONTRACTOR PRIOR TO DEMOLITION.
15. THE CONTRACTOR IS REQUIRED TO CAPTURE ALL REFRIGERANT ON ALL EQUIPMENT PLANNED FOR DEMOLITION CONTAINING REFRIGERANT.
16. CITY OF WILMINGTON TRAFFIC CONTROL SIGNS LOCATED IN THE RIGHT-OF-WAY SHALL BE MAINTAINED TO THE MAXIMUM EXTENT PRACTIBLE OR REPLACED AT THE END OF CONSTRUCTION AT LOCATION IDENTIFIED BY CITY OF WILMINGTON TRAFFIC ENGINEERING OR SHOWN ON THE SITE PLAN. CAPE FEAR COMMUNITY COLLEGE SIGNS LOCATED IN THE RIGHT-OF-WAY SHALL BE REMOVED AND RETURNED TO OWNER IN GOOD CONDITION.

TREE PROTECTION NOTES:

1. PRIOR TO ANY CLEARING, GRADING, OR CONSTRUCTION ACTIVITY, TREE PROTECTION FENCING WILL BE INSTALLED AROUND PROTECTED TREES OR GROVES OF TREES. NO CONSTRUCTION WORKERS, TOOLS, MATERIALS OR VEHICLES ARE PERMITTED WITHIN THE TREE PROTECTION FENCING.
2. NO LAND DISTURBANCE INCLUDING TREE REMOVAL IS TO OCCUR OUTSIDE THE LIMITS OF DISTURBANCE SHOWN ON THE PLANS. [18-457(B)]
3. PROTECTIVE FENCING IS TO BE PROPERLY MAINTAINED THROUGHOUT THE DURATION OF THE PROJECT. [18-458]
4. LAND CLEARING AND CONSTRUCTION CONTRACTORS SHALL RECEIVE ADEQUATE INSTRUCTION ON TREE PROTECTION REQUIREMENTS AND METHODS. [18-457(D)]
5. NO EQUIPMENT IS ALLOWED ON THE SITE UNTIL ALL TREE PROTECTION FENCING AND SILT FENCING HAS BEEN INSTALLED AND APPROVED. [18-458]
6. ANY TREES AND/OR AREAS DESIGNATED TO BE PROTECTED MUST BE PROPERLY BARRICADED WITH FENCING AND PROTECTED THROUGHOUT CONSTRUCTION TO INSURE THAT NO CLEARING AND GRADING OR STAGING OF MATERIALS WILL OCCUR IN THOSE AREAS. [18-458]
7. REGULATED AND SIGNIFICANT TREES IN THE STREET YARD [18-456(C)] AND ANY TREES IN ANY REQUIRED BUFFERS [18-456(B)] ARE REQUIRED TO BE RETAINED.

CONSTRUCTION NOTES:

1. PROTECTION OF EXISTING VEGETATION: AT THE START OF GRADING INVOLVING THE LOWERING OR RAISING OF EXISTING GRADE AROUND A TREE OR STRIPPING OF TOPSOIL, A CLEAN, SHARP, VERTICAL CUT SHALL BE MADE AT THE EDGE OF THE TREE SAVE AREA AT THE SAME TIME AS OTHER EROSION CONTROL MEASURES ARE INSTALLED. THE TREE PROTECTION FENCING SHALL BE INSTALLED ON THE SIDE OF THE CUT FARTHEST AWAY FROM THE TREE TRUNK AND SHALL REMAIN IN PLACE UNTIL ALL CONSTRUCTION IN THE VICINITY OF THE TREES IS COMPLETE. NO STORAGE OF MATERIALS, FILL OR EQUIPMENT AND NO TRESPASSING SHALL BE ALLOWED WITHIN THE BOUNDARY OF THE PROTECTED AREA.
2. HANDICAP PARKING SIGNS WILL CONFORM TO N.C.S.B.C. DETAILS R7-8 AND R7-8D.
3. ALL SIGNAGE AND PAVEMENT MARKINGS IN AREAS OPEN TO PUBLIC TRAFFIC SHALL MEET MUTCD (MANUAL ON UNIFORM TRAFFIC CONTROL DEVICES) STANDARDS.
4. THE CONTRACTOR IS RESPONSIBLE FOR PROVIDING A TRAFFIC CONTROL PLAN AND DEVICES DURING CONSTRUCTION WORK IN ACCORDANCE WITH THE MUTCD, OWNER AND CITY OF WILMINGTON STANDARDS.
5. ALL DIMENSIONS ARE MEASURED TO THE BACK OF CURB UNLESS OTHERWISE INDICATED.
6. THE CONTRACTOR IS RESPONSIBLE FOR INSTALLING THE PARKING SIGNS, TRAFFIC SIGNS AND PAVEMENT MARKINGS. THE CONTRACTOR SHALL COORDINATE THIS WORK WITH THE OWNER REPRESENTATIVE PRIOR TO BIDDING AND CONSTRUCTION AS REQUIRED.
7. CONSTRUCTION FENCING WILL BE INSTALLED AND MAINTAINED FOR DURATION OF PROJECT.
8. ALL SIGNAGE MUST BE OBTAINED AS A SEPARATE PERMIT THROUGH
9. CONTACT THE NORTH CAROLINA ONE CALL CENTER PRIOR TO DOING ANY DIGGING. 1-800-632-4949
10. THE BELL SOUTH CONTACT IS STEVE DAYVAULT. HE IS THE BUILDING INDUSTRY CONSULTANT (910) 392-8712. PLEASE CONTACT HIM PRIOR TO STARTING THE PROJECT IN ORDER TO FACILITATE GOOD COMMUNICATION AND MAXIMUM FLEXIBILITY.
11. THE PROCESS FOR TELEPHONE CABLE PLACEMENT:
    - *FINAL GRADE WILL NEED TO BE ESTABLISHED.
    - *POWER WILL PLACE THEIR CABLE FIRST - ABOUT 3' DEEP
    - *BELLSOUTH/CABLE TV WILL THEN PLACE CABLE - ABOUT 2' DEEP

PARKING FACILITY DESIGN NOTES (SD 15-13)

1. STREET SIGN AND PAVEMENT MARKING APPROVALS ARE REQUIRED FROM TRAFFIC ENGINEERING AT 341-7888.
2. TRAFFIC ENGINEERING MUST APPROVE PAVEMENT MARKING LAYOUT PRIOR TO ACTUAL STRIPING.
3. A UTILITY CUT PERMIT IS REQUIRED FOR EACH OPEN CUT OF A CITY STREET.
4. WHEEL STOPS SHALL BE REQUIRED THREE (3) FEET FROM THE END OF PARKING STALL WHEN USING EIGHTEEN (18) FEET DEEP STALLS.
5. CURBING, CROSSTIES, UTILITY POLES, ETC., CAN BE USED AS WHEEL STOPS. (MUST BE ANCHORED DOWN)
6. TACTILE WARNING MATS ARE TO BE INSTALLED ON ALL WHEELCHAIR RAMPS.
7. ALL TRAFFIC CONTROL SIGNS AND MARKINGS OFF THE RIGHT-OF-WAY ARE TO BE MAINTAINED BY THE PROPERTY OWNER.
8. ALL PARKING STALL MARKINGS AND LANE ARROWS SHALL BE WHITE.
9. ALL PAVEMENT MARKINGS REGULATING TRAFFIC FLOW MUST BE THERMOPLASTIC.
10. ALL OTHER PAVEMENT MARKINGS, SIGNS OR OTHER TRAFFIC CONTROL DEVICES SHALL CONFORM TO THE LATEST EDITION AND/OR INTERPRETATION OF THE MANUAL ON UNIFORM TRAFFIC CONTROL DEVICES (MUTCD).
11. NO OBSTRUCTIONS WILL BE ALLOWED ADJACENT TO A PARKING STALL WHICH WOULD PREVENT SAFE INGRESS AND EGRESS FROM A PARKED VEHICLE.
12. PARKING IN FIRE LANES AND IN NON-RESIDENTIAL DRIVEWAYS SHALL BE PREVENTED BY STANDARD SIGNS AND AS NEEDED BY PORTABLE BARRICADES.

CITY OF WILMINGTON STANDARD NOTES:

1. CONTACT THE NORTH CAROLINA ONE CALL CENTER PRIOR TO DOING ANY DIGGING AT 1-800-632-4949.
2. PRIOR TO ANY CLEARING, GRADING OR CONSTRUCTION ACTIVITY, TREE PROTECTION FENCING WILL BE INSTALLED AROUND PROTECTED TREES OR GROVES OF TREES AND NO CONSTRUCTION WORKERS, TOOLS, MATERIALS, OR VEHICLES ARE PERMITTED WITHIN THE TREE PROTECTION FENCING.
3. ALL PAVEMENT MARKINGS IN PUBLIC RIGHTS-OF-WAY AND FOR DRIVEWAYS ARE TO BE THERMOPLASTIC AND MEET CITY AND/OR NCDOT STANDARDS.
4. ONCE STREETS ARE OPEN TO TRAFFIC, THE DEVELOPER SHALL CONTACT TRAFFIC ENGINEERING TO REQUEST INSTALLATION OF TRAFFIC AND STREET NAME SIGNS. PROPOSED STREET NAMES MUST BE APPROVED PRIOR TO INSTALLATION OF STREET NAME SIGNS.
5. TRAFFIC CONTROL DEVICES (INCLUDING SIGNS AND PAVEMENT MARKINGS) IN AREAS OPEN TO PUBLIC TRAFFIC ARE TO MEET MUTCD (MANUAL ON UNIFORM TRAFFIC CONTROL DEVICES) STANDARDS.
6. ANY BROKEN OR MISSING SIDEWALK PANELS AND CURBING SHALL BE REPLACED BY THE CONTRACTOR.
7. CONTACT KAREN DIXON AT 341-7888 TO DISCUSS STREET LIGHTING OPTIONS.
8. IF THE CONTRACTOR DESIRES WATER FOR CONSTRUCTION HE SHALL APPLY WITH THE CFPUA IN ADVANCE FOR THIS SERVICE AND MUST PROVIDE A REDUCED PRESSURE ZONE (RPZ) BACKFLOW PREVENTION DEVICE ON THE DEVELOPER'S SIDE OF THE WATER METER BOX.
9. THE NUMBER AND SPACING OF DRIVEWAYS FOR ALL INTERCONNECTED SITES WILL BE DETERMINED BY THE COMBINED FRONTAGE OF THE INTERCONNECTED PROPERTIES.
10. CONTACT TRAFFIC ENGINEERING TO ENSURE THAT ALL TRAFFIC SIGNAL FACILITIES AND EQUIPMENT ARE SHOWN ON THE PLAN. CALL TRAFFIC ENGINEERING FORTY-EIGHT HOURS PRIOR TO ANY EXCAVATION IN THE RIGHT-OF-WAY.

FIRE PROTECTION NOTES:

1. HYDRANT MUST BE WITHIN 150' OF THE FDC.
2. THE FDC MUST BE WITHIN 40' OF FIRE APPARATUS PLACEMENT.
3. LANDSCAPING OR PARKING CANNOT BLOCK OR IMPEDE THE FDC OR FIRE HYDRANTS. A 3-FOOT CLEAR SPACE SHALL BE MAINTAINED AROUND THE CIRCUMFERENCE OF THE HYDRANT AND FDC.
4. HYDRANTS MUST BE LOCATED WITHIN 8' OF THE CURB.
5. COMBUSTIBLE MATERIALS MAY NOT BE STORED OR ERECTED ONSITE WITHOUT CITY FIRE INSPECTOR APPROVAL.
6. NEW HYDRANTS MUST BE AVAILABLE FOR USE PRIOR TO CONSTRUCTION OF THE BUILDING(S).
7. UNDERGROUND FIRE LINE AND PRIVATE WATER MAINS MUST BE PERMITTED AND INSPECTED BY THE WILMINGTON FIRE DEPARTMENT FROM THE PUBLIC RIGHT-OF-WAY TO THE BUILDING. CONTACT THE WILMINGTON FIRE DEPARTMENT DIVISION OF FIRE AND LIFE SAFETY AT 910-343-0696 FOR ADDITIONAL INFORMATION.
8. A MINIMUM OF 5' SHALL SEPARATE UNDERGROUND FIRE LINES OR PRIVATE WATER MAINS FROM UNDERGROUND UTILITIES
9. CONTRACTOR SHALL MAINTAIN AN ALL WEATHER ACCESS FOR EMERGENCY VEHICLES AT ALL TIMES DURING CONSTRUCTION.
10. TEMPORARY STREET SIGNS SHALL BE INSTALLED AT EACH STREET INTERSECTION WHEN CONSTRUCTION OF NEW ROADWAYS ALLOWS PASSAGE BY VEHICLES.

UTILITY NOTES:

1. SCHEDULE A PRECONSTRUCTION MEETING WITH CAPE FEAR PUBLIC UTILITY AUTHORITY 48 HOURS PRIOR TO CONSTRUCTION OF WATER AND SEWER LINES.
2. WATER AND SANITARY SEWER UTILITY MAINS ARE PRIVATE BEYOND THE PUBLIC STREET RIGHT-OF-WAY.
3. THIS PROJECT SHALL COMPLY WITH THE CFPUA CROSS CONNECTION CONTROL REQUIREMENTS. WATER METER(S) CANNOT BE RELEASED UNTIL ALL REQUIREMENTS ARE MET AND NCDENR HAS ISSUED THE "FINAL APPROVAL".
4. ALL COMMERCIAL WATER SERVICES AND ANY IRRIGATION SYSTEMS SUPPLIED BY CFPUA WATER SHALL HAVE A BACKFLOW PREVENTION DEVICE ACCEPTABLE TO CFPUA AND APPROVED BY USCFCCCHR OR ASSE.
5. BACKFLOW PREVENTION AND METERS WILL BE PROVIDED FOR BOTH FIRE LINES (RPZ) AND DOMESTIC SERVICE (RPZ). FIRE LINE BACKFLOW PREVENTER AND DOMESTIC SERVICE BACKFLOW PREVENTER WILL BE LOCATED AS SHOWN ON THE UTILITY PLANS. INSTALLER OF BACKFLOW PREVENTERS MUST CONTACT CFPUA PRIOR TO INSTALLING UNITS TO GIVE CFPUA THE OPTION TO VERIFY INSTALLATION PROCEDURES.
   - 5.1. REDUCED PRESSURE PRINCIPLE ASSEMBLY FOR DOMESTIC WATER SERVICE
   - 5.2. REDUCE PRESSURE DETECTOR ASSEMBLY WILL BE UTILIZED FOR THE BACKFLOW PREVENTER ON THE FIRE SERVICE.
6. IF THE CONTRACTOR DESIRES CFPUA WATER FOR CONSTRUCTION HE SHALL APPLY IN ADVANCE FOR THIS SERVICE AND MUST PROVIDE A REDUCED PRESSURE ZONE (RPZ) BACKFLOW PREVENTION DEVICE ON THE DEVELOPER'S SIDE OF THE WATER METER BOX.
7. WATER: 1.5" & 2" PVC MAINS SHALL BE CONSTRUCTED USING ASTM D2241, IPS, GASKETED PIPE, SDR 21. 4"-12" PVC MAINS AND SERVICES SHALL BE CONSTRUCTED USING AWWA C-900 PVC, CL235 (DR-18).
8. SANITARY SEWER: FOR PIPE SIZES 4" AND 6" PIPE SHALL BE SCH 40 CONFORMING TO THE REQUIREMENTS OF ASTM D1785 WITH SOLVENT WELD JOINTS CONFORMING TO ASTM D2672. FOR PIPE SIZES 8" THROUGH 12", PIPE SHALL BE CLASS 150, DR18 CONFORMING TO THE REQUIREMENTS OF AWWA C900 WITH ELASTOMERIC PUSH-ON JOINTS CONFORMING TO ASTM D3212 OR ASTM D3139.
9. WATER AND SEWER SERVICES CANNOT BE ACTIVATED ON NEW MAINS UNTIL ENGINEER'S CERTIFICATION AND AS-BUILTS ARE RECEIVED AND "FINAL APPROVAL" ISSUED BY PUBLIC WATER SUPPLY SECTION OF NCDENR AND "FINAL ENGINEERING CERTIFICATION" ISSUED BY DIVISION OF WATER QUALITY OF NCDENR.
10. PVC WATER MAINS AND POLYETHYLENE SERVICES ARE TO BE MARKED WITH NO. 10 SINGLE STRAND INSULATED COPPER WIRE INSTALLED THE ENTIRE LENGTH AND STRAPPED TO THE PIPES WITH DUCT TAPE. THE INSULATED WIRE IS TO BE STRIPPED TO BARE WIRE AND SECURED TO ALL VALVES. THIS WIRE IS TO BE ACCESSIBLE AT ALL FIRE HYDRANTS AND WATER METER BOXES TO AID IN FUTURE LOCATION OF FACILITIES.
11. SITE UTILITY CONTRACTOR TO PROVIDE WATER AND SANITARY SEWER SERVICE TO WITHIN 5 FEET OF THE BUILDING. CONTRACTOR SHALL COORDINATE SITE PLAN CONNECTIONS WITH THE ARCHITECTURAL BUILDING PLANS.
12. MAXIMUM BENDING RADIUS FOR 8" C-900 PVC WATER MAIN BENDS IS 380' (ONE-HALF MANUFACTURER'S RECOMMENDED ALLOWABLE LONGITUDINAL BENDING).
13. FIRE SPRINKLERS WILL BE PROVIDED FOR BUILDING.
14. UNDERGROUND UTILITIES: ALL NEW UTILITIES SHALL BE INSTALLED UNDERGROUND, EXCEPT WHERE SUCH PLACEMENT IS PROHIBITED OR DEEMED IMPRACTICAL BY THE UTILITY PROVIDER. UNDERGROUND TERMINAL FACILITIES FOR STREET LIGHTING ALONG THE PUBLIC STREETS ABUTTING THE SUBJECT SITE SHALL BE INSTALLED BY THE DEVELOPER.
15. MINIMUM OF 36" COVERAGE ABOVE ALL WATERMAINS.
16. MINIMUM OF 36" VERTICAL SEPARATION BETWEEN WATERLINES AND STORMDRAIN CURB INLETS.

RELATION OF WATER MAINS TO SEWERS:

1. LATERAL SEPARATION OF SEWERS AND WATER MAINS: WATER MAINS SHALL BE LAID AT LEAST 10 FEET LATERALLY FROM EXISTING OR PROPOSED SEWERS UNLESS LOCAL CONDITIONS OR BARRIERS PREVENT A 10 FOOT LATERAL SEPARATION, IN WHICH CASE:
   - 1.1. THE WATER MAIN IS LAID IN A SEPARATE TRENCH, WITH THE ELEVATION OF THE BOTTOM OF THE WATER MAIN AT LEAST 18 INCHES ABOVE THE TOP OF THE SEWER, OR
   - 1.2. THE WATER MAIN IS LAID IN THE SAME TRENCH AS THE SEWER WITH THE WATER MAIN LOCATED AT ONE SIDE ON A BENCH OF UNDISTURBED EARTH, AND ABOVE THE TOP OF THE SEWER.
2. CROSSING A WATER MAIN OVER A SEWER MAIN: WHENEVER IT IS NECESSARY FOR A WATER MAIN TO CROSS OVER A SEWER THE WATER MAIN SHALL BE LAID AT SUCH AN ELEVATION THAT THE BOTTOM OF THE WATER MAIN IS AT LEAST 24 INCHES ABOVE THE TOP OF THE SEWER MAIN. UNLESS LOCAL CONDITIONS OR BARRIERS PREVENT AN 18 INCH VERTICAL SEPARATION - IN WHICH CASE BOTH THE WATER MAIN AND THE SEWER MAIN SHALL BE CONSTRUCTED OF FERROUS MATERIALS AND WITH JOINTS THAT ARE EQUIVALENT TO WATER MAIN STANDARDS FOR A DISTANCE OF 10 FEET ON EACH SIDE OF THE POINT OF CROSSING.
3. CROSSING A WATER MAIN UNDER A SEWER MAIN: WHENEVER IT IS NECESSARY FOR A WATER MAIN TO CROSS UNDER A SEWER MAIN BOTH THE WATER MAIN AND THE SEWER MAIN SHALL BE CONSTRUCTED OF FERROUS MATERIALS AND WITH JOINTS EQUIVALENT TO WATER MAIN STANDARDS FOR A DISTANCE OF 10 FEET ON EACH SIDE OF THE POINT OF CROSSING.
4. CROSSING A SEWER MAIN/WATER MAIN OVER OR UNDER A STORM DRAIN: WHENEVER IT IS NECESSARY FOR A SEWER MAIN/WATER MAIN TO CROSS A STORM DRAIN PIPE, THE SEWER MAIN/WATER MAIN SHALL BE LAID AT SUCH AN ELEVATION THAT THE OUTSIDE OF THE SEWER MAIN/WATER MAIN NEAREST TO THE OUTSIDE OF THE STORM DRAIN PIPE SHALL MAINTAIN A 24 INCH CLEAR SEPARATION DISTANCE HORIZONTAL, OR THE SEWER MAIN/WATER MAIN SHALL EITHER BE CONSTRUCTED OF DUCTILE IRON PIPE OR ENCASED IN EITHER CONCRETE OR DUCTILE IRON PIPE FOR AT LEAST 5 FEET ON EITHER SIDE OF THE CROSSING.

ESTIMATED WATER & SANITARY DEMAND			
PROPOSED USE	EXISTING FLOW (GPD)	REQUIREMENT	FLOW (GAL)
MEDICAL OFFICE BUILDIING (52 PRACTIONERS)	0 (SURFACE PARKING)	250 GAL/PRACTIONER/SHIFT	13,000
HOSPITALITY CENTER (24 ROOMS)	0 (SURFACE PARKING)	120 GPD/ROOM	2,880
		TOTAL =	15,880

CONSTRUCTION NOTES:

1. THESE DRAWINGS SHOW INFORMATION OBTAINED FROM THE AVAILABLE RECORDS REGARDING PIPES, CONDUITS, TELEPHONE LINES, AND OTHER STRUCTURES AND CONDITIONS WHICH EXIST ALONG THE LINES OF WORK AND BELOW THE SURFACE OF THE GROUND. THE OWNER AND ENGINEER DISCLAIM ANY RESPONSIBILITIES FOR THE ACCURACY OR COMPLETENESS OF SAID INFORMATION, AND SUCH INFORMATION IS BEING SHOWN ONLY FOR THE CONVENIENCE OF THE CONTRACTOR WHO MUST VERIFY THE INFORMATION TO HIS OWN SATISFACTION DURING THE BIDDING AND CONSTRUCTION PHASES. IF THE CONTRACTOR RELIES ON SAID INFORMATION, HE DOES SO AT HIS OWN RISK. THE GIVING OF THE INFORMATION ON THE CONTRACT DRAWINGS WILL NOT RELIEVE THE CONTRACTOR OF HIS OBLIGATIONS TO SUPPORT AND PROTECT ALL PIPES, CONDUITS, TELEPHONE LINES, AND OTHER STRUCTURES, WHETHER ABOVE OR BELOW GRADE.
2. SHOULD ANY DAMAGE OCCUR TO EXISTING UTILITIES, IT SHALL BE REPAIRED SOLELY AT THE CONTRACTOR'S EXPENSE.
3. THE CONTRACTOR SHALL VERIFY EXISTING INVERTS PRIOR TO CONSTRUCTION OF UNDERGROUND UTILITIES. TEST PITTING OF EXISTING LINES PRIOR TO CONSTRUCTION, IF NECESSARY, SHALL BE COORDINATED WITH THE OWNER.
4. THE CONTRACTOR SHALL NOTIFY THE CFPUA AT LEAST TWO (2) WEEKS PRIOR TO THE START OF CONSTRUCTION AND SHALL COORDINATE ALL CONSTRUCTION PHASES WITH THEM.
5. ALL MATERIALS AND METHODS OF CONSTRUCTION SHALL CONFORM TO THE DRAWINGS, PROJECT SPECIFICATIONS, AND LOCAL BUILDING CODES.
6. ALL DISTURBED AREAS SHALL BE SMOOTHLY GRADED TO PROMOTE POSITIVE DRAINAGE AND STABILIZED WITH TOPSOIL, SEED, AND MULCH. IF SETTLEMENT OCCURS, TOPSOIL, SEEDING, AND MULCH SHALL BE REPEATED UNTIL SETTLEMENT SUBSIDES. (SEE EROSION AND SEDIMENT CONTROL DETAILS AND SPECIFICATIONS.)
7. WATER MAINS WILL BE INSTALLED AT A DEPTH THAT WILL PROVIDE 36" COVER OVER THE PIPES BELOW PROPOSED GRADE UNLESS SHOWN OTHERWISE ON THESE PLANS OR DIRECTED OTHERWISE BY THE ENGINEER.
8. WHEREVER SEWER OR WATER MAINS CROSS ONE ANOTHER, A MINIMUM VERTICAL CLEARANCE OF 24" SHALL BE PROVIDED BETWEEN THE BOTTOM OF THE WATER PIPE AND THE TOP OF THE SEWER PIPE OR THE SEWER SHALL BE CLASS 50 DIP, MINIMUM OF 20 LF CENTERED OVER THE CROSSING.
9. WHEREVER SEWER OR WATER MAINS RUN PARALLEL TO EACH OTHER, A MINIMUM HORIZONTAL SEPARATION OF 10' SHALL BE PROVIDED, OR 24" VERTICAL SEPARATION OR THE SEWER SHALL BE CLASS 50 DIP, MINIMUM OF 20 LF CENTERED OVER THE CROSSING.
10. ALL WATER VALVES, BOXES, AND FIRE HYDRANT ASSEMBLES SHALL BE SET AND ADJUSTED TO FINISHED GRADE.
11. THE OWNER IS RESPONSIBLE FOR THE ACQUISITION OF ALL EASEMENTS, BOTH TEMPORARY AND PERMANENT.
12. THE CONTRACTOR SHALL VERIFY HORIZONTAL AND VERTICAL SURVEY CONTROL PRIOR TO STAKING OUT CONSTRUCTION. ANY DISCREPANCIES SHALL BE BROUGHT TO THE ATTENTION OF THE ENGINEER PRIOR TO PROCEEDING WITH WORK.
13. ANY PROPERTY LINE MONUMENT DISTURBED DURING CONSTRUCTION SHALL BE REPLACED SOLELY AT THE CONTRACTOR'S EXPENSE.
14. THE CONTRACTOR ASSUMES ALL RESPONSIBILITY FOR ANY DEVIATION FROM THESE PLANS.

ADDITIONAL TREATMENTS:

HVAC EQUIPMENT, AIR CONDITIONING WINDOW UNITS, AND OTHER ELECTRICAL EQUIPMENT SHALL NOT BE LOCATED ON STREET FRONTAGES. ALL SUCH EQUIPMENT SHALL BE PLACED IN THE INTERIOR YARDS OR ON THE ROOF OF THE BUILDING AND SCREENED FROM THE RIGHT OF WAY. THROUGH-WALL MECHANICAL UNITS ARE PERMITTED ON ANY FACADE IF THEY ARE INCORPORATED INTO THE DESIGN OF THE BUILDING, FLUSH WITH THE FACADE ON WHICH THEY ARE LOCATED, CONCEALED BY A VENT COVER AND HAVE AN INTERNAL DRIP SYSTEM FOR CONDENSATION. UTILITY METERS, TRANSFORMERS AND FIXED TRASH DISPOSAL RECEPTACLES THAT CANNOT BE CONCEALED FROM THE PUBLIC RIGHT OF WAY SHALL BE SCREENED WITH AN OPAQUE FENCE OR WALL.

SOLID WASTE:

1. SOLID WASTE DISPOSAL WILL BE LOCATED IN THE DUMPSTER AREA.

UTILITY MARKING:

ALL UNDERGROUND UTILITY LINES OUTSIDE OF THE BUILDING FOOTPRINT, EXCEPT LAWN IRRIGATION LINES, SHALL HAVE WARNING TAPE INSTALLED IN THE BACKFILL BETWEEN 6" TO 24" BELOW FINISHED GRADE, DIRECTLY OVER PIPING.

1. METALLIC LINES SHALL BE IDENTIFIED WITH PRINTED DURABLE PLASTIC WARNING TAPE, MINIMUM 3" WIDTH AT 12" BELOW FINISHED GRADE, WITH LETTERING TO IDENTIFY BURIED LINE BELOW.
2. NON-METALLIC LINES, OTHER THAN GAS LINES, SHALL BE IDENTIFIED BY DETECTABLE WARNING TAPE, MINIMUM 2" WIDTH AT 12" BELOW FINISHED GRADE, WITH LETTERING TO IDENTIFY BURIED LINE BELOW.
3. 2009 NC GAS CODE 404.14.3 TRACER: AN INSULATED COPPER WIRE OR OTHER APPROVED CONDUCTOR SHALL BE INSTALLED ADJACENT TO UNDERGROUND NON-METALLIC LINES. ACCESS SHALL BE PROVIDED TO THE TRACER WIRE OR THE TRACER WIRE SHALL TERMINATE ABOVE GROUND AT THE END OF THE NON-METALLIC LINES. THE TRACER WIRE SIZE SHALL NOT BE LESS THAN 18 AWG AND THE INSULATION TYPE SHALL BE SUITABLE FOR DIRECT BURIAL.

NHRMC CARDIOLOGY CENTER

LS3P ASSOCIATES LTD.
2528 INDEPENDENCE BLVD. SUITE 200
WILMINGTON, NORTH CAROLINA 28412
TEL. 910.790.9901 FAX 910.790.3111
WWW.LS3P.COM

NORTH CAROLINA PROFESSIONAL ENGINEER SEAL 025503 RICHARD A. MOORE 3/27/13

REVISIONS:

No.	Description	Date

PROJECT: 04853-0015
DATE: 27 FEBRUARY 2013
DRAWN BY: EEM
CHECKED BY: RAM

CR-001

SOLUTIONS THROUGH LISTENING
SERVICE BY DESIGN
DESIGN DEVELOPMENT

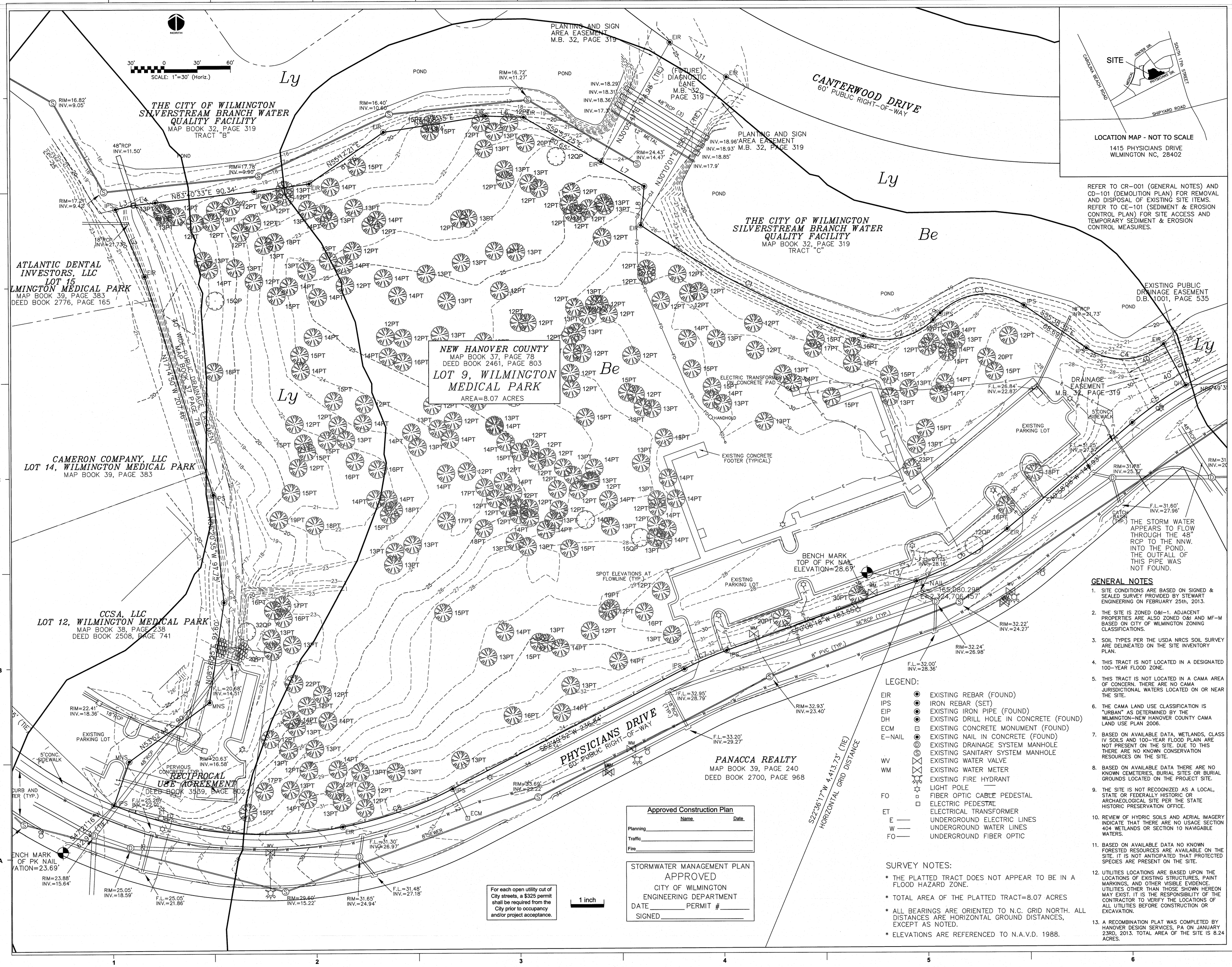

LOCATION MAP - NOT TO SCALE

1415 PHYSICIANS DRIVE
WILMINGTON NC, 28402

REFER TO CR-001 (GENERAL NOTES) AND CD-101 (DEMOLITION PLAN) FOR REMOVAL AND DISPOSAL OF EXISTING SITE ITEMS. REFER TO CE-101 (SEDIMENT & EROSION CONTROL PLAN) FOR SITE ACCESS AND TEMPORARY SEDIMENT & EROSION CONTROL MEASURES.

GENERAL NOTES

1. SITE CONDITIONS ARE BASED ON SIGNED & SEALED SURVEY PROVIDED BY STEWART ENGINEERING ON FEBRUARY 25th, 2013.
2. THE SITE IS ZONED O&I-1. ADJACENT PROPERTIES ARE ALSO ZONED O&I AND MF-M BASED ON CITY OF WILMINGTON ZONING CLASSIFICATIONS.
3. SOIL TYPES PER THE USDA NRCS SOIL SURVEY ARE DELINEATED ON THE SITE INVENTORY PLAN.
4. THIS TRACT IS NOT LOCATED IN A DESIGNATED 100-YEAR FLOOD ZONE.
5. THIS TRACT IS NOT LOCATED IN A CAMA AREA OF CONCERN. THERE ARE NO CAMA JURISDICTIONAL WATERS LOCATED ON OR NEAR THE SITE.
6. THE CAMA LAND USE CLASSIFICATION IS "URBAN" AS DETERMINED BY THE WILMINGTON-NEW HANOVER COUNTY CAMA LAND USE PLAN 2006.
7. BASED ON AVAILABLE DATA, WETLANDS, CLASS IV SOILS AND 100-YEAR FLOOD PLAIN ARE NOT PRESENT ON THE SITE. DUE TO THIS THERE ARE NO KNOWN CONSERVATION RESOURCES ON THE SITE.
8. BASED ON AVAILABLE DATA THERE ARE NO KNOWN CEMETERIES, BURIAL SITES OR BURIAL GROUNDS LOCATED ON THE PROJECT SITE.
9. THE SITE IS NOT RECOGNIZED AS A LOCAL, STATE OR FEDERALLY HISTORIC OR ARCHAEOLOGICAL SITE PER THE STATE HISTORIC PRESERVATION OFFICE.
10. REVIEW OF HYDRIC SOILS AND AERIAL IMAGERY INDICATE THAT THERE ARE NO USACE SECTION 404 WETLANDS OR SECTION 10 NAVIGABLE WATERS.
11. BASED ON AVAILABLE DATA NO KNOWN FORESTED RESOURCES ARE AVAILABLE ON THE SITE. IT IS NOT ANTICIPATED THAT PROTECTED SPECIES ARE PRESENT ON THE SITE.
12. UTILITIES LOCATIONS ARE BASED UPON THE LOCATIONS OF EXISTING STRUCTURES, PAINT MARKINGS, AND OTHER VISIBLE EVIDENCE. UTILITIES OTHER THAN THOSE SHOWN HEREON MAY EXIST. IT IS THE RESPONSIBILITY OF THE CONTRACTOR TO VERIFY THE LOCATIONS OF ALL UTILITIES BEFORE CONSTRUCTION OR EXCAVATION.
13. A RECOMBINATION PLAT WAS COMPLETED BY HANOVER DESIGN SERVICES, PA ON JANUARY 23RD, 2013. TOTAL AREA OF THE SITE IS 8.24 ACRES.

LEGEND:

EIR	⦿	EXISTING REBAR (FOUND)
IPS	⦿	IRON REBAR (SET)
EIP	⦿	EXISTING IRON PIPE (FOUND)
DH	⦿	EXISTING DRILL HOLE IN CONCRETE (FOUND)
ECM	⊡	EXISTING CONCRETE MONUMENT (FOUND)
E-NAIL	⦿	EXISTING NAIL IN CONCRETE (FOUND)
	Ⓓ	EXISTING DRAINAGE SYSTEM MANHOLE
	Ⓢ	EXISTING SANITARY SYSTEM MANHOLE
WV	⋈	EXISTING WATER VALVE
WM	⋈	EXISTING WATER METER
	⋇	EXISTING FIRE HYDRANT
	☼	LIGHT POLE
FO	□	FIBER OPTIC CABLE PEDESTAL
	□	ELECTRIC PEDESTAL
ET		ELECTRICAL TRANSFORMER
E ——		UNDERGROUND ELECTRIC LINES
W ——		UNDERGROUND WATER LINES
FO ——		UNDERGROUND FIBER OPTIC

SURVEY NOTES:

* THE PLATTED TRACT DOES NOT APPEAR TO BE IN A FLOOD HAZARD ZONE.
* TOTAL AREA OF THE PLATTED TRACT=8.07 ACRES
* ALL BEARINGS ARE ORIENTED TO N.C. GRID NORTH. ALL DISTANCES ARE HORIZONTAL GROUND DISTANCES, EXCEPT AS NOTED.
* ELEVATIONS ARE REFERENCED TO N.A.V.D. 1988.

NHRMC CARDIOLOGY CENTER

LS3P ASSOCIATES LTD.
2528 INDEPENDENCE BLVD. SUITE 200
WILMINGTON, NORTH CAROLINA 28412
TEL. 910.790.9901 FAX 910.790.3111
WWW.LS3P.COM

NORTH CAROLINA REGISTERED LANDSCAPE ARCHITECT SEAL 025003 ENGINEER RICHARD A. MOORE 4/24/13

REVISIONS:

No.	Description	Date

PROJECT: 04853-0015
DATE: 27 FEBRUARY 2013
DRAWN BY: EEM
CHECKED BY: RAM

EXISTING CONDITIONS & SITE INVENTORY MAP

CX-101

SOLUTIONS THROUGH LISTENING
SERVICE BY DESIGN

DESIGN DEVELOPMENT

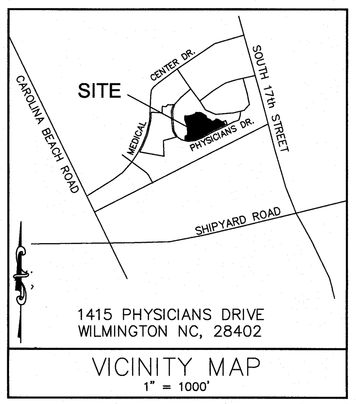

1415 PHYSICIANS DRIVE
WILMINGTON NC, 28402

VICINITY MAP
1" = 1000'

CANTERWOOD DRIVE
60' PUBLIC RIGHT-OF-WAY

NORTH

30' 0 30' 60'
SCALE: 1"=30' (Horiz.)

PHYSICIANS DRIVE
60' PUBLIC RIGHT-OF-WAY

TREES TO REMAIN (TYP)

EXISTING FIBER OPTIC TO BE REMOVED

CONCRETE SIDEWALK TO BE REMOVED

EXISTING CONCRETE FOOTER TO BE REMOVED

ASPHALT PARKING TO BE REMOVED

CURB AND GUTTER TO BE REMOVED

LIGHT POLE TO BE RELOCATED

TRANSFORMER AND CONCRETE PAD TO BE REMOVED

ELECTRIC TRANSFORMER ON CONCRETE PAD

HANDHOLD TO BE REMOVED

EXISTING ELECTRICAL SERVICE TO BE REMOVED

EXISTING ELECTRICAL SERVICE TO BE REMOVED

EXISTING ELECTRIC SERVICE TO BE REMOVED

STORM DRAIN AND INLET TO BE REMOVED

LIGHT POLE TO BE REMOVED

LIGHT POLE TO BE REMOVED

EXISTING PARKING LOT

EXISTING PARKING LOT

LIGHT POLE TO BE REMOVED

LIGHT POLE TO BE REMOVED

LIGHT POLE TO BE REMOVED

EXISTING FIBER OPTIC TO BE REMOVED

EXISTING FIBER OPTIC

EXISTING WATER METER & VALVE TO BE REMOVED PER CFPUA STANDARDS

OVERHEAD ELECTRIC SCHEDULED TO BE REMOVED BY PROGRESS ENERGY PRIOR TO BEGINNING OF CONSTRUCTION (SEE PROGRESS ENERGY NOTE, THIS PAGE)

EXISTING WATER METER – RETAIN AND CONVERT TO IRRIGATION METER

REMOVE ASPHALT – DRIVEWAY TO BE CLOSED

REMOVE ASPHALT DRIVEWAY TO BE CLOSED

RIM=16.72'
INV.=11.27'

RIM=16.40'
INV.=10.60'

RIM=17.78'
INV.=9.90'

RIM=17.21'
INV.=9.42'

18"RCP
INV.=21.73'

INV.=18.29'
INV.=18.31'
INV.=18.36'
INV.=17.3'

48"RCP (3)

12" METAL

RIM=24.43'
INV.=14.47'

INV.=18.96'
INV.=18.93'
INV.=18.85'
INV.=17.9'

18"RCP
INV.=21.73'

RIM=22.41'
INV.=18.36'

18"RCP

48"RCP

RIM=20.63'
INV.=16.58'

F.L.=20.68'
INV.=14.51'

F.L.=25.26'
INV.=22.01'

RIM=23.88'
INV.=15.64'

RIM=25.05'
INV.=18.59'

F.L.=25.05'
INV.=21.86'

RIM=29.60'
INV.=15.22'

RIM=31.65'
INV.=24.94'

8"SEWER

F.L.=31.30'
INV.=26.97'

F.L.=31.48'
INV.=27.18'

RIM=23.69'
INV.=22.22'

F.L.=32.95'
INV.=28.79'

RIM=32.93'
INV.=23.40'

F.L.=33.20'
INV.=29.27'

8" PVC (T)

F.L.=32.00'
INV.=28.36'

RIM=32.24'
INV.=26.98'

RIM=32.22'
INV.=24.27'

F.L.=26.84'
INV.=22.87'

F.L.=31.25'
INV.=27.82'

RIM=31.78'
INV.=25.32'

RIM=31.78'
INV.=28.16'

F.L.=31.60'
INV.=27.98'

Approved Construction Plan

	Name	Date
Planning		
Traffic		
Fire		

STORMWATER MANAGEMENT PLAN
APPROVED
CITY OF WILMINGTON
ENGINEERING DEPARTMENT
DATE_____ PERMIT #_____
SIGNED_____

For each open utility cut of City streets, a $325 permit shall be required from the City prior to occupancy and/or project acceptance.

1 inch

DEMOLITION HATCHING LEGEND

- CURB & CONCRETE TO BE REMOVED
- ASPHALT TO BE REMOVED
- SIDEWALK/STEPS TO BE REMOVED
- BUILDING TO BE REMOVED

DEMOLITION LINE LEGEND

- UTILITY TO BE REMOVED
- UTILITY POLE TO BE REMOVED
- OTHER REMOVED (BOLLARD, VALVES, FIRE HYDRANT...)
- SIGN TO BE REMOVED OR REPLACED (SEE DEMO NOTE 16)
- TREE REMOVED

NHRMC CARDIOLOGY CENTER

LS3P ASSOCIATES LTD.
2528 INDEPENDENCE BLVD. SUITE 200
WILMINGTON, NORTH CAROLINA 28412
TEL. 910.790.9901 FAX 910.790.3111
WWW.LS3P.COM

NORTH CAROLINA PROFESSIONAL SEAL 025503 ENGINEER RICHARD A. MOORE 2/27/13

REVISIONS:

No.	Description	Date

PROJECT: 04853-0015
DATE: 27 FEBRUARY 2013
DRAWN BY: EEM
CHECKED BY: RAM

DEMOLITION PLAN

CD-101

SOLUTIONS THROUGH LISTENING
SERVICE BY DESIGN
DESIGN DEVELOPMENT

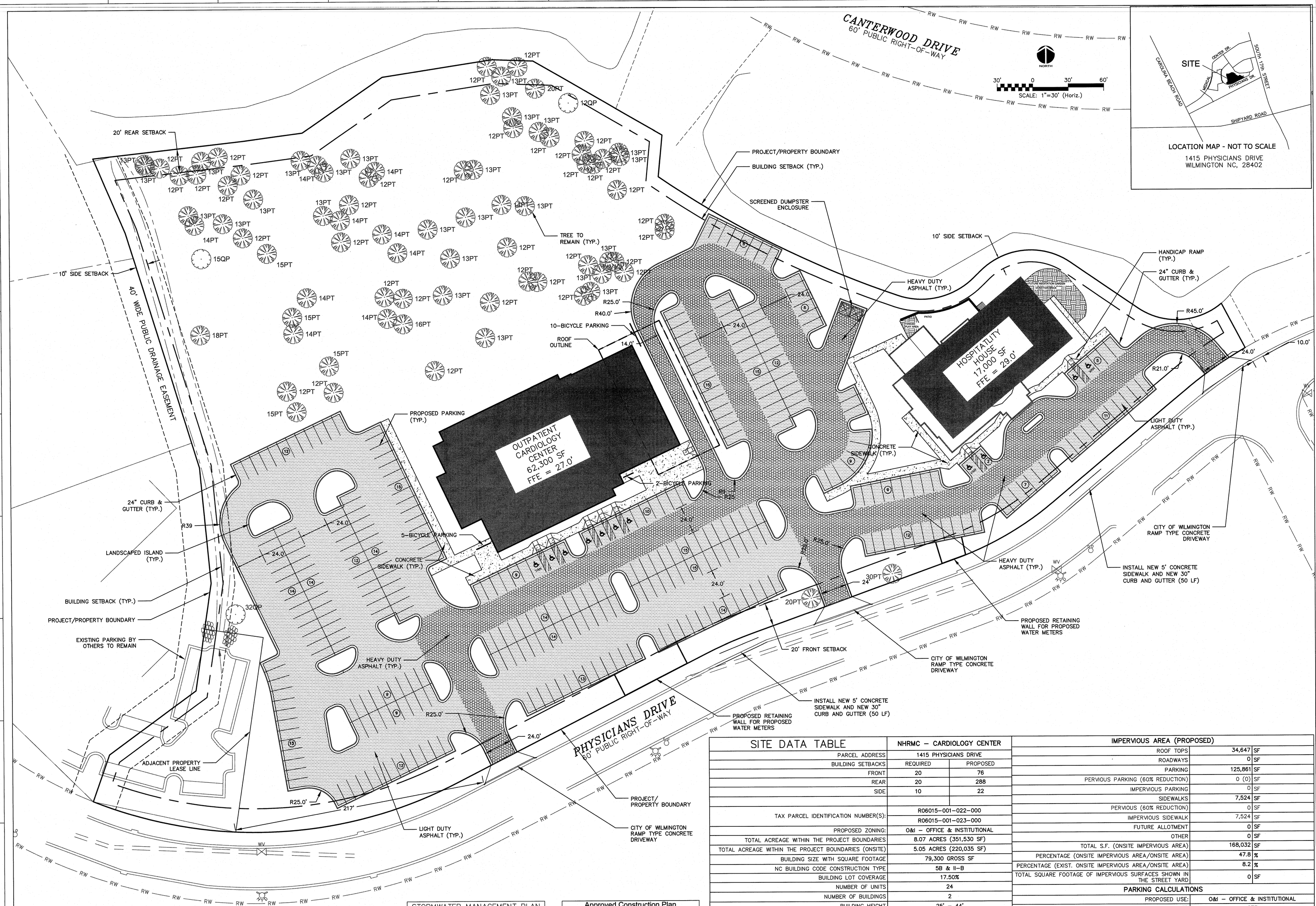

SITE DATA TABLE	NHRMC – CARDIOLOGY CENTER	
PARCEL ADDRESS	1415 PHYSICIANS DRIVE	
BUILDING SETBACKS	REQUIRED	PROPOSED
FRONT	20	76
REAR	20	288
SIDE	10	22
TAX PARCEL IDENTIFICATION NUMBER(S):	R06015-001-022-000	
	R06015-001-023-000	
PROPOSED ZONING:	O&I – OFFICE & INSTITUTIONAL	
TOTAL ACREAGE WITHIN THE PROJECT BOUNDARIES	8.07 ACRES (351,530 SF)	
TOTAL ACREAGE WITHIN THE PROJECT BOUNDARIES (ONSITE)	5.05 ACRES (220,035 SF)	
BUILDING SIZE WITH SQUARE FOOTAGE	79,300 GROSS SF	
NC BUILDING CODE CONSTRUCTION TYPE	5B & II-B	
BUILDING LOT COVERAGE	17.50%	
NUMBER OF UNITS	24	
NUMBER OF BUILDINGS	2	
BUILDING HEIGHT	25' – 44'	
NO. OF STORIES/SQUARE FEET PER FLOOR (BLDGS 1 & 2)	FIRST FLOOR – 36,706 SF	
	SECOND FLOOR – 21,451 SF	
	THIRD FLOOR – 21,143 SF	
TOTAL AMOUNT OF DISTURBED AREA	5.96 ACRES (259,618 SF)	
CAMA LAND USE CLASSIFICATION	URBAN	
EXISTING IMPERVIOUS AREA	28,678 SF	

IMPERVIOUS AREA (PROPOSED)		
ROOF TOPS	34,647	SF
ROADWAYS	0	SF
PARKING	125,861	SF
PERVIOUS PARKING (60% REDUCTION)	0 (0)	SF
IMPERVIOUS PARKING	0	SF
SIDEWALKS	7,524	SF
PERVIOUS (60% REDUCTION)	0	SF
IMPERVIOUS SIDEWALK	7,524	SF
FUTURE ALLOTMENT	0	SF
OTHER	0	SF
TOTAL S.F. (ONSITE IMPERVIOUS AREA)	168,032	SF
PERCENTAGE (ONSITE IMPERVIOUS AREA/ONSITE AREA)	47.8	%
PERCENTAGE (EXIST. ONSITE IMPERVIOUS AREA/ONSITE AREA)	8.2	%
TOTAL SQUARE FOOTAGE OF IMPERVIOUS SURFACES SHOWN IN THE STREET YARD	0	SF
PARKING CALCULATIONS		
PROPOSED USE:	O&I – OFFICE & INSTITUTIONAL	
MINIMUM NUMBER OF SPACES REQUIRED	273	
	1 SPACE PER 250 SF & 1/UNIT	
MAXIMUM NUMBER OF SPACES REQUIRED	390	
	1 SPACE PER 170 SF & 1/UNIT	
SPACES PROVIDED	340	
EXISTING USE:	VACANT	
SPACES EXISTING	0	
ACCESSIBLE SPACES REQUIRED	8	
TOTAL PARKING IN LOT	340	
ACCESSIBLE SPACES PROVIDED	11 (3 VAN)	

5 BICYCLE SPACES PER 100 SPACES SHALL BE PROVIDED (17 PROVIDED)

STORMWATER MANAGEMENT PLAN
APPROVED
CITY OF WILMINGTON
ENGINEERING DEPARTMENT
DATE_____ PERMIT #_____
SIGNED_____

Approved Construction Plan

	Name	Date
Planning		
Traffic		
Fire		

For each open utility cut of City streets, a $325 permit shall be required from the City prior to occupancy and/or project acceptance.

1 inch

NHRMC CARDIOLOGY CENTER

LS3P ASSOCIATES LTD.
2528 INDEPENDENCE BLVD. SUITE 200
WILMINGTON, NORTH CAROLINA 28412
TEL. 910.790.9901 FAX 910.790.3111
WWW.LS3P.COM

NORTH CAROLINA PROFESSIONAL ENGINEER SEAL 025503 RICHARD A. MORRIS 3/7/13

REVISIONS:

No.	Description	Date

PROJECT: 04853-0015
DATE: 27 FEBRUARY 2013
DRAWN BY: EEM
CHECKED BY: RAM

SITE PLAN

CS-101

SOLUTIONS THROUGH LISTENING
SERVICE BY DESIGN
DESIGN DEVELOPMENT

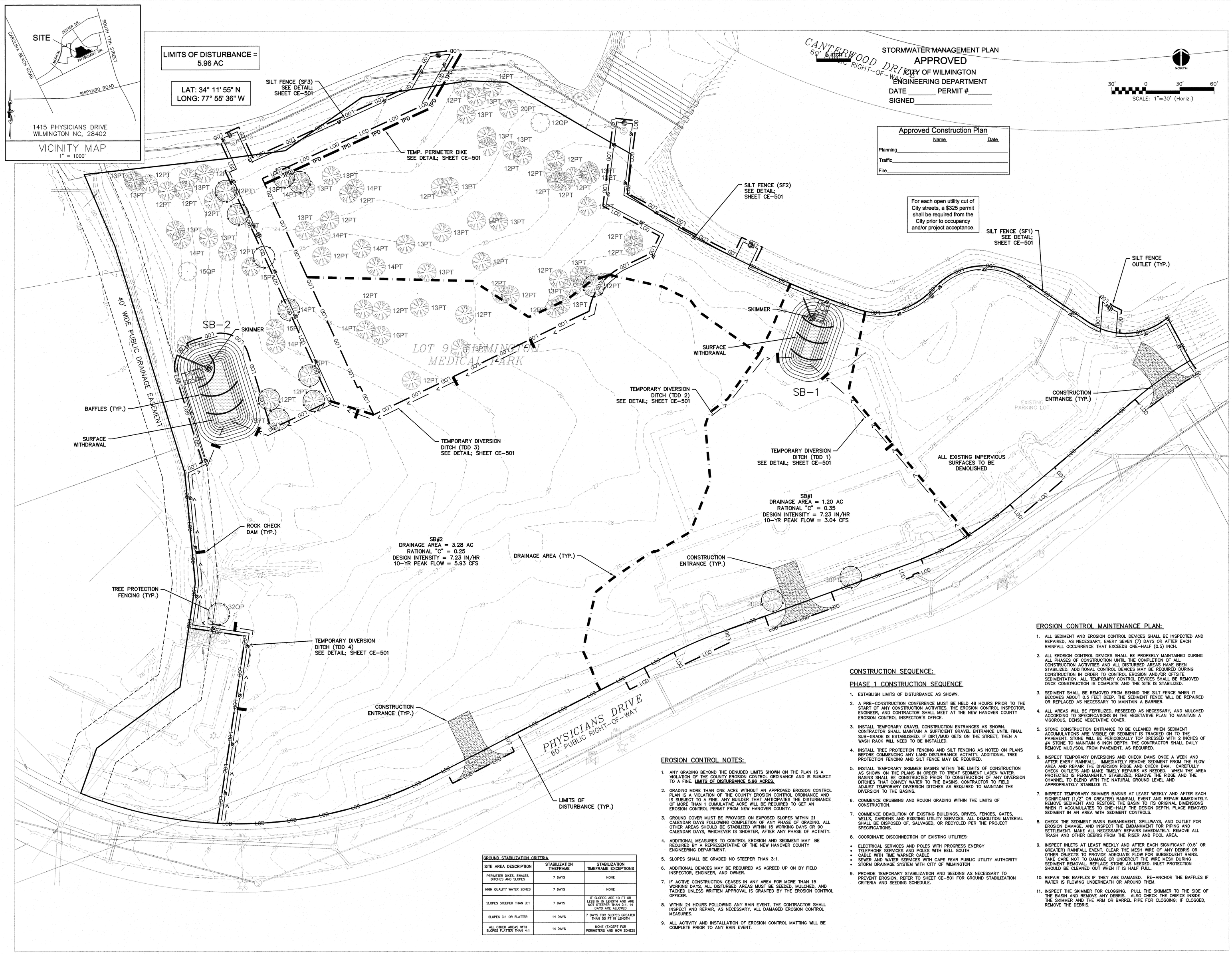

GROUND STABILIZATION CRITERIA		
SITE AREA DESCRIPTION	STABILIZATION TIMEFRAME	STABILIZATION TIMEFRAME EXCEPTIONS
PERIMETER DIKES, SWALES, DITCHES AND SLOPES	7 DAYS	NONE
HIGH QUALITY WATER ZONES	7 DAYS	NONE
SLOPES STEEPER THAN 3:1	7 DAYS	IF SLOPES ARE 10 FT OR LESS IN IN LENGTH AND ARE NOT STEEPER THAN 2:1, 14 DAYS ARE ALLOWED
SLOPES 3:1 OR FLATTER	14 DAYS	7 DAYS FOR SLOPES GREATER THAN 50 FT IN LENGTH
ALL OTHER AREAS WITH SLOPES FLATTER THAN 4:1	14 DAYS	NONE (EXCEPT FOR PERIMETERS AND HOW ZONES)

EROSION CONTROL NOTES:

1. ANY GRADING BEYOND THE DENUDED LIMITS SHOWN ON THE PLAN IS A VIOLATION OF THE COUNTY EROSION CONTROL ORDINANCE AND IS SUBJECT TO A FINE. LIMITS OF DISTURBANCE 5.96 ACRES.
2. GRADING MORE THAN ONE ACRE WITHOUT AN APPROVED EROSION CONTROL PLAN IS A VIOLATION OF THE COUNTY EROSION CONTROL ORDINANCE AND IS SUBJECT TO A FINE. ANY BUILDER THAT ANTICIPATES THE DISTURBANCE OF MORE THAN 1 CUMULATIVE ACRE WILL BE REQUIRED TO GET AN EROSION CONTROL PERMIT FROM NEW HANOVER COUNTY.
3. GROUND COVER MUST BE PROVIDED ON EXPOSED SLOPES WITHIN 21 CALENDAR DAYS FOLLOWING COMPLETION OF ANY PHASE OF GRADING. ALL OTHER AREAS SHOULD BE STABILIZED WITHIN 15 WORKING DAYS OR 90 CALENDAR DAYS, WHICHEVER IS SHORTER, AFTER ANY PHASE OF ACTIVITY.
4. ADDITIONAL MEASURES TO CONTROL EROSION AND SEDIMENT MAY BE REQUIRED BY A REPRESENTATIVE OF THE NEW HANOVER COUNTY ENGINEERING DEPARTMENT.
5. SLOPES SHALL BE GRADED NO STEEPER THAN 3:1.
6. ADDITIONAL DEVICES MAY BE REQUIRED AS AGREED UP ON BY FIELD INSPECTOR, ENGINEER, AND OWNER.
7. IF ACTIVE CONSTRUCTION CEASES IN ANY AREA FOR MORE THAN 15 WORKING DAYS, ALL DISTURBED AREAS MUST BE SEEDED, MULCHED, AND TACKED UNLESS WRITTEN APPROVAL IS GRANTED BY THE EROSION CONTROL OFFICER.
8. WITHIN 24 HOURS FOLLOWING ANY RAIN EVENT, THE CONTRACTOR SHALL INSPECT AND REPAIR, AS NECESSARY, ALL DAMAGED EROSION CONTROL MEASURES.
9. ALL ACTIVITY AND INSTALLATION OF EROSION CONTROL MATTING WILL BE COMPLETE PRIOR TO ANY RAIN EVENT.

CONSTRUCTION SEQUENCE:

PHASE 1 CONSTRUCTION SEQUENCE

1. ESTABLISH LIMITS OF DISTURBANCE AS SHOWN.
2. A PRE-CONSTRUCTION CONFERENCE MUST BE HELD 48 HOURS PRIOR TO THE START OF ANY CONSTRUCTION ACTIVITIES. THE EROSION CONTROL INSPECTOR, ENGINEER, AND CONTRACTOR SHALL MEET AT THE NEW HANOVER COUNTY EROSION CONTROL INSPECTOR'S OFFICE.
3. INSTALL TEMPORARY GRAVEL CONSTRUCTION ENTRANCES AS SHOWN. CONTRACTOR SHALL MAINTAIN A SUFFICIENT GRAVEL ENTRANCE UNTIL FINAL SUB-GRADE IS ESTABLISHED. IF DIRT/MUD GETS ON THE STREET, THEN A WASH RACK WILL NEED TO BE INSTALLED.
4. INSTALL TREE PROTECTION FENCING AND SILT FENCING AS NOTED ON PLANS BEFORE COMMENCING ANY LAND DISTURBANCE ACTIVITY. ADDITIONAL TREE PROTECTION FENCING AND SILT FENCE MAY BE REQUIRED.
5. INSTALL TEMPORARY SKIMMER BASINS WITHIN THE LIMITS OF CONSTRUCTION AS SHOWN ON THE PLANS IN ORDER TO TREAT SEDIMENT LADEN WATER. BASINS SHALL BE CONSTRUCTED PRIOR TO CONSTRUCTION OF ANY DIVERSION DITCHES THAT CONVEY WATER TO THE BASINS. CONTRACTOR TO FIELD ADJUST TEMPORARY DIVERSION DITCHES AS REQUIRED TO MAINTAIN THE DIVERSION TO THE BASINS.
6. COMMENCE GRUBBING AND ROUGH GRADING WITHIN THE LIMITS OF CONSTRUCTION.
7. COMMENCE DEMOLITION OF EXISTING BUILDINGS, DRIVES, FENCES, GATES, WELLS, GARDENS AND EXISTING UTILITY SERVICES. ALL DEMOLITION MATERIAL SHALL BE DISPOSED OF, SALVAGED, OR RECYCLED PER THE PROJECT SPECIFICATIONS.
8. COORDINATE DISCONNECTION OF EXISTING UTILITIES:
   - ELECTRICAL SERVICES AND POLES WITH PROGRESS ENERGY
   - TELEPHONE SERVICES AND POLES WITH BELL SOUTH
   - CABLE WITH TIME WARNER CABLE
   - SEWER AND WATER SERVICES WITH CAPE FEAR PUBLIC UTILITY AUTHORITY
   - STORM DRAINAGE SYSTEM WITH CITY OF WILMINGTON
9. PROVIDE TEMPORARY STABILIZATION AND SEEDING AS NECESSARY TO PREVENT EROSION. REFER TO SHEET CE-501 FOR GROUND STABILIZATION CRITERIA AND SEEDING SCHEDULE.

EROSION CONTROL MAINTENANCE PLAN:

1. ALL SEDIMENT AND EROSION CONTROL DEVICES SHALL BE INSPECTED AND REPAIRED, AS NECESSARY, EVERY SEVEN (7) DAYS OR AFTER EACH RAINFALL OCCURRENCE THAT EXCEEDS ONE-HALF (0.5) INCH.
2. ALL EROSION CONTROL DEVICES SHALL BE PROPERLY MAINTAINED DURING ALL PHASES OF CONSTRUCTION UNTIL THE COMPLETION OF ALL CONSTRUCTION ACTIVITIES AND ALL DISTURBED AREAS HAVE BEEN STABILIZED. ADDITIONAL CONTROL DEVICES MAY BE REQUIRED DURING CONSTRUCTION IN ORDER TO CONTROL EROSION AND/OR OFFSITE SEDIMENTATION. ALL TEMPORARY CONTROL DEVICES SHALL BE REMOVED ONCE CONSTRUCTION IS COMPLETE AND THE SITE IS STABILIZED.
3. SEDIMENT SHALL BE REMOVED FROM BEHIND THE SILT FENCE WHEN IT BECOMES ABOUT 0.5 FEET DEEP. THE SEDIMENT FENCE WILL BE REPAIRED OR REPLACED AS NECESSARY TO MAINTAIN A BARRIER.
4. ALL AREAS WILL BE FERTILIZED, RESEEDED AS NECESSARY, AND MULCHED ACCORDING TO SPECIFICATIONS IN THE VEGETATIVE PLAN TO MAINTAIN A VIGOROUS, DENSE VEGETATIVE COVER.
5. STONE CONSTRUCTION ENTRANCE TO BE CLEANED WHEN SEDIMENT ACCUMULATIONS ARE VISIBLE OR SEDIMENT IS TRACKED ON TO THE PAVEMENT. STONE WILL BE PERIODICALLY TOP DRESSED WITH 2 INCHES OF #4 STONE TO MAINTAIN 6 INCH DEPTH. THE CONTRACTOR SHALL DAILY REMOVE MUD/SOIL FROM PAVEMENT, AS REQUIRED.
6. INSPECT TEMPORARY DIVERSIONS AND CHECK DAMS ONCE A WEEK AND AFTER EVERY RAINFALL. IMMEDIATELY REMOVE SEDIMENT FROM THE FLOW AREA AND REPAIR THE DIVERSION RIDGE AND CHECK DAM. CAREFULLY CHECK OUTLETS AND MAKE TIMELY REPAIRS AS NEEDED. WHEN THE AREA PROTECTED IS PERMANENTLY STABILIZED, REMOVE THE RIDGE AND THE CHANNEL TO BLEND WITH THE NATURAL GROUND LEVEL AND APPROPRIATELY STABILIZE IT.
7. INSPECT TEMPORARY SKIMMER BASINS AT LEAST WEEKLY AND AFTER EACH SIGNIFICANT (1/2" OR GREATER) RAINFALL EVENT AND REPAIR IMMEDIATELY. REMOVE SEDIMENT AND RESTORE THE BASIN TO ITS ORIGINAL DIMENSIONS WHEN IT ACCUMULATES TO ONE-HALF THE DESIGN DEPTH. PLACE REMOVED SEDIMENT IN AN AREA WITH SEDIMENT CONTROLS.
8. CHECK THE SEDIMENT BASIN EMBANKMENT, SPILLWAYS, AND OUTLET FOR EROSION DAMAGE, AND INSPECT THE EMBANKMENT FOR PIPING AND SETTLEMENT. MAKE ALL NECESSARY REPAIRS IMMEDIATELY. REMOVE ALL TRASH AND OTHER DEBRIS FROM THE RISER AND POOL AREA.
9. INSPECT INLETS AT LEAST WEEKLY AND AFTER EACH SIGNIFICANT (0.5" OR GREATER) RAINFALL EVENT. CLEAR THE MESH WIRE OF ANY DEBRIS OR OTHER OBJECTS TO PROVIDE ADEQUATE FLOW FOR SUBSEQUENT RAINS. TAKE CARE NOT TO DAMAGE OR UNDERCUT THE WIRE MESH DURING SEDIMENT REMOVAL. REPLACE STONE AS NEEDED. INLET PROTECTION SHOULD BE CLEANED OUT WHEN IT IS HALF FULL.
10. REPAIR THE BAFFLES IF THEY ARE DAMAGED. RE-ANCHOR THE BAFFLES IF WATER IS FLOWING UNDERNEATH OR AROUND THEM.
11. INSPECT THE SKIMMER FOR CLOGGING. PULL THE SKIMMER TO THE SIDE OF THE BASIN AND REMOVE ANY DEBRIS. ALSO CHECK THE ORIFICE INSIDE THE SKIMMER AND THE ARM OR BARREL PIPE FOR CLOGGING; IF CLOGGED, REMOVE THE DEBRIS.

NHRMC CARDIOLOGY CENTER

LS3P ASSOCIATES LTD.
2528 INDEPENDENCE BLVD. SUITE 200
WILMINGTON, NORTH CAROLINA 28412
TEL. 910.790.9901 FAX 910.790.3111
WWW.LS3P.COM

NORTH CAROLINA PROFESSIONAL ENGINEER SEAL 025503 RICHARD A. MOORE 3/7/13

REVISIONS:

No.	Description	Date

PROJECT: 04853-0015
DATE: 27 FEBRUARY 2013
DRAWN BY: EEM
CHECKED BY: RAM

SEDIMENT & EROSION CONTROL PLAN

CE-101

SOLUTIONS THROUGH LISTENING
SERVICE BY DESIGN
DESIGN DEVELOPMENT

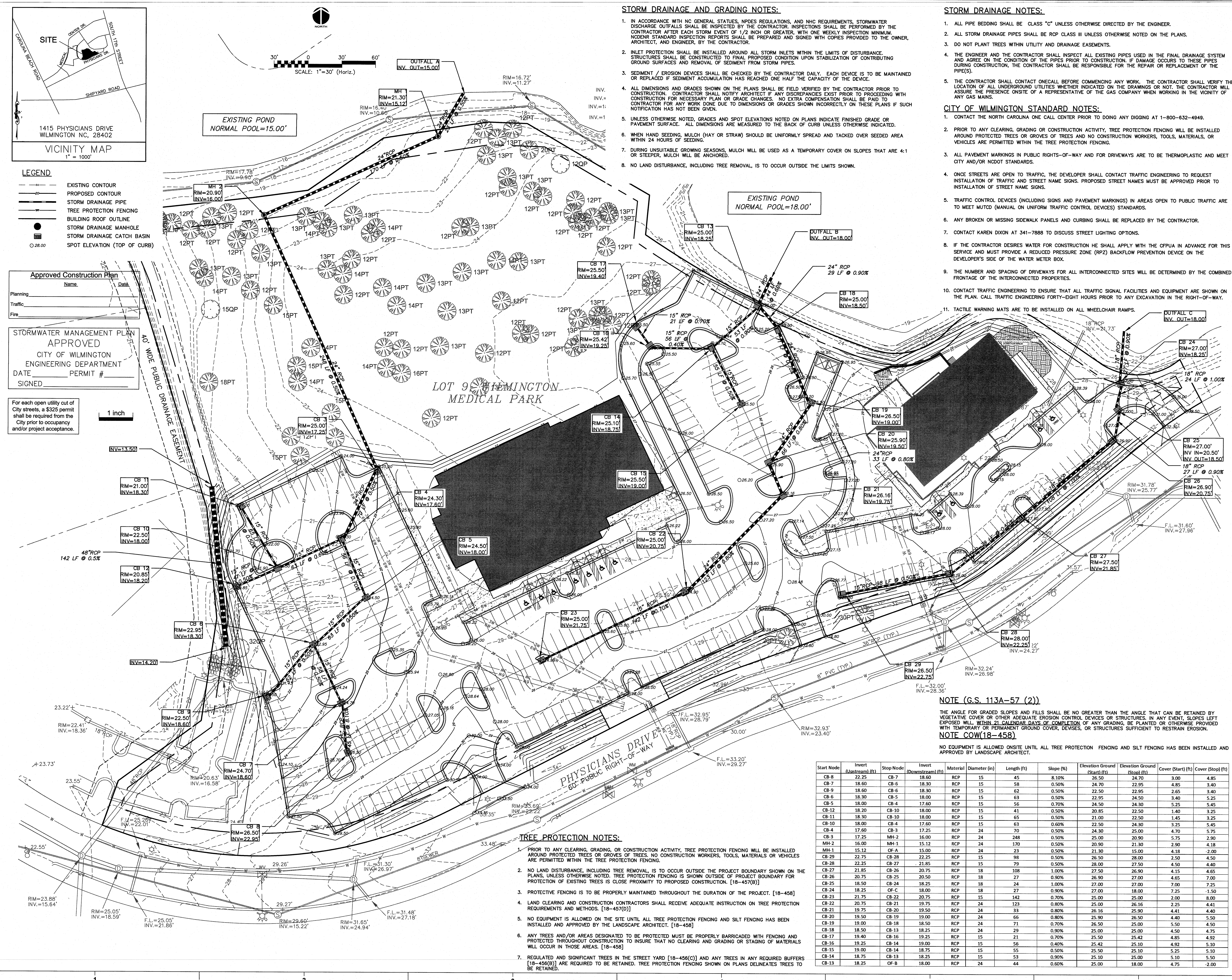

STORM DRAINAGE AND GRADING NOTES:

1. IN ACCORDANCE WITH NC GENERAL STATUES, NPDES REGULATIONS, AND NHC REQUIREMENTS, STORMWATER DISCHARGE OUTFALLS SHALL BE INSPECTED BY THE CONTRACTOR. INSPECTIONS SHALL BE PERFORMED BY THE CONTRACTOR AFTER EACH STORM EVENT OF 1/2 INCH OR GREATER, WITH ONE WEEKLY INSPECTION MINIMUM. NCDENR STANDARD INSPECTION REPORTS SHALL BE PREPARED AND SIGNED WITH COPIES PROVIDED TO THE OWNER, ARCHITECT, AND ENGINEER, BY THE CONTRACTOR.
2. INLET PROTECTION SHALL BE INSTALLED AROUND ALL STORM INLETS WITHIN THE LIMITS OF DISTURBANCE. STRUCTURES SHALL BE CONSTRUCTED TO FINAL PROPOSED CONDITION UPON STABILIZATION OF CONTRIBUTING GROUND SURFACES AND REMOVAL OF SEDIMENT FROM STORM PIPES.
3. SEDIMENT / EROSION DEVICES SHALL BE CHECKED BY THE CONTRACTOR DAILY. EACH DEVICE IS TO BE MAINTAINED OR REPLACED IF SEDIMENT ACCUMULATION HAS REACHED ONE HALF THE CAPACITY OF THE DEVICE.
4. ALL DIMENSIONS AND GRADES SHOWN ON THE PLANS SHALL BE FIELD VERIFIED BY THE CONTRACTOR PRIOR TO CONSTRUCTION. CONTRACTOR SHALL NOTIFY ARCHITECT IF ANY DISCREPANCIES EXIST PRIOR TO PROCEEDING WITH CONSTRUCTION FOR NECESSARY PLAN OR GRADE CHANGES. NO EXTRA COMPENSATION SHALL BE PAID TO CONTRACTOR FOR ANY WORK DONE DUE TO DIMENSIONS OR GRADES SHOWN INCORRECTLY ON THESE PLANS IF SUCH NOTIFICATION HAS NOT BEEN GIVEN.
5. UNLESS OTHERWISE NOTED, GRADES AND SPOT ELEVATIONS NOTED ON PLANS INDICATE FINISHED GRADE OR PAVEMENT SURFACE. ALL DIMENSIONS ARE MEASURED TO THE BACK OF CURB UNLESS OTHERWISE INDICATED.
6. WHEN HAND SEEDING, MULCH (HAY OR STRAW) SHOULD BE UNIFORMLY SPREAD AND TACKED OVER SEEDED AREA WITHIN 24 HOURS OF SEEDING.
7. DURING UNSUITABLE GROWING SEASONS, MULCH WILL BE USED AS A TEMPORARY COVER ON SLOPES THAT ARE 4:1 OR STEEPER, MULCH WILL BE ANCHORED.
8. NO LAND DISTURBANCE, INCLUDING TREE REMOVAL, IS TO OCCUR OUTSIDE THE LIMITS SHOWN.

STORM DRAINAGE NOTES:

1. ALL PIPE BEDDING SHALL BE CLASS "C" UNLESS OTHERWISE DIRECTED BY THE ENGINEER.
2. ALL STORM DRAINAGE PIPES SHALL BE RCP CLASS III UNLESS OTHERWISE NOTED ON THE PLANS.
3. DO NOT PLANT TREES WITHIN UTILITY AND DRAINAGE EASEMENTS.
4. THE ENGINEER AND THE CONTRACTOR SHALL INSPECT ALL EXISTING PIPES USED IN THE FINAL DRAINAGE SYSTEM AND AGREE ON THE CONDITION OF THE PIPES PRIOR TO CONSTRUCTION. IF DAMAGE OCCURS TO THESE PIPES DURING CONSTRUCTION, THE CONTRACTOR SHALL BE RESPONSIBLE FOR THE REPAIR OR REPLACEMENT OF THE PIPE(S).
5. THE CONTRACTOR SHALL CONTACT ONECALL BEFORE COMMENCING ANY WORK. THE CONTRACTOR SHALL VERIFY THE LOCATION OF ALL UNDERGROUND UTILITIES WHETHER INDICATED ON THE DRAWINGS OR NOT. THE CONTRACTOR WILL ASSURE THE PRESENCE ONSITE OF A REPRESENTATIVE OF THE GAS COMPANY WHEN WORKING IN THE VICINITY OF ANY GAS MAINS.

CITY OF WILMINGTON STANDARD NOTES:

1. CONTACT THE NORTH CAROLINA ONE CALL CENTER PRIOR TO DOING ANY DIGGING AT 1-800-632-4949.
2. PRIOR TO ANY CLEARING, GRADING OR CONSTRUCTION ACTIVITY, TREE PROTECTION FENCING WILL BE INSTALLED AROUND PROTECTED TREES OR GROVES OF TREES AND NO CONSTRUCTION WORKERS, TOOLS, MATERIALS, OR VEHICLES ARE PERMITTED WITHIN THE TREE PROTECTION FENCING.
3. ALL PAVEMENT MARKINGS IN PUBLIC RIGHTS-OF-WAY AND FOR DRIVEWAYS ARE TO BE THERMOPLASTIC AND MEET CITY AND/OR NCDOT STANDARDS.
4. ONCE STREETS ARE OPEN TO TRAFFIC, THE DEVELOPER SHALL CONTACT TRAFFIC ENGINEERING TO REQUEST INSTALLATION OF TRAFFIC AND STREET NAME SIGNS. PROPOSED STREET NAMES MUST BE APPROVED PRIOR TO INSTALLATION OF STREET NAME SIGNS.
5. TRAFFIC CONTROL DEVICES (INCLUDING SIGNS AND PAVEMENT MARKINGS) IN AREAS OPEN TO PUBLIC TRAFFIC ARE TO MEET MUTCD (MANUAL ON UNIFORM TRAFFIC CONTROL DEVICES) STANDARDS.
6. ANY BROKEN OR MISSING SIDEWALK PANELS AND CURBING SHALL BE REPLACED BY THE CONTRACTOR.
7. CONTACT KAREN DIXON AT 341-7888 TO DISCUSS STREET LIGHTING OPTIONS.
8. IF THE CONTRACTOR DESIRES WATER FOR CONSTRUCTION HE SHALL APPLY WITH THE CFPUA IN ADVANCE FOR THIS SERVICE AND MUST PROVIDE A REDUCED PRESSURE ZONE (RPZ) BACKFLOW PREVENTION DEVICE ON THE DEVELOPER'S SIDE OF THE WATER METER BOX.
9. THE NUMBER AND SPACING OF DRIVEWAYS FOR ALL INTERCONNECTED SITES WILL BE DETERMINED BY THE COMBINED FRONTAGE OF THE INTERCONNECTED PROPERTIES.
10. CONTACT TRAFFIC ENGINEERING TO ENSURE THAT ALL TRAFFIC SIGNAL FACILITIES AND EQUIPMENT ARE SHOWN ON THE PLAN. CALL TRAFFIC ENGINEERING FORTY-EIGHT HOURS PRIOR TO ANY EXCAVATION IN THE RIGHT-OF-WAY.
11. TACTILE WARNING MATS ARE TO BE INSTALLED ON ALL WHEELCHAIR RAMPS.

NOTE (G.S. 113A-57 (2))

THE ANGLE FOR GRADED SLOPES AND FILLS SHALL BE NO GREATER THAN THE ANGLE THAT CAN BE RETAINED BY VEGETATIVE COVER OR OTHER ADEQUATE EROSION CONTROL DEVICES OR STRUCTURES. IN ANY EVENT, SLOPES LEFT EXPOSED WILL, WITHIN 21 CALENDAR DAYS OF COMPLETION OF ANY GRADING, BE PLANTED OR OTHERWISE PROVIDED WITH TEMPORARY OR PERMANENT GROUND COVER, DEVISES, OR STRUCTURES SUFFICIENT TO RESTRAIN EROSION.

NOTE COW(18-458)

NO EQUIPMENT IS ALLOWED ONSITE UNTIL ALL TREE PROTECTION FENCING AND SILT FENCING HAS BEEN INSTALLED AND APPROVED BY LANDSCAPE ARCHITECT.

TREE PROTECTION NOTES:

1. PRIOR TO ANY CLEARING, GRADING, OR CONSTRUCTION ACTIVITY, TREE PROTECTION FENCING WILL BE INSTALLED AROUND PROTECTED TREES OR GROVES OF TREES. NO CONSTRUCTION WORKERS, TOOLS, MATERIALS OR VEHICLES ARE PERMITTED WITHIN THE TREE PROTECTION FENCING.
2. NO LAND DISTURBANCE, INCLUDING TREE REMOVAL, IS TO OCCUR OUTSIDE THE PROJECT BOUNDARY SHOWN ON THE PLANS, UNLESS OTHERWISE NOTED. TREE PROTECTION FENCING IS SHOWN OUTSIDE OF PROJECT BOUNDARY FOR PROTECTION OF EXISTING TREES IS CLOSE PROXIMITY TO PROPOSED CONSTRUCTION. [18-457(B)]
3. PROTECTIVE FENCING IS TO BE PROPERLY MAINTAINED THROUGHOUT THE DURATION OF THE PROJECT. [18-458]
4. LAND CLEARING AND CONSTRUCTION CONTRACTORS SHALL RECEIVE ADEQUATE INSTRUCTION ON TREE PROTECTION REQUIREMENTS AND METHODS. [18-457(D)]
5. NO EQUIPMENT IS ALLOWED ON THE SITE UNTIL ALL TREE PROTECTION FENCING AND SILT FENCING HAS BEEN INSTALLED AND APPROVED BY THE LANDSCAPE ARCHITECT. [18-458]
6. ANY TREES AND/OR AREAS DESIGNATED TO BE PROTECTED MUST BE PROPERLY BARRICADED WITH FENCING AND PROTECTED THROUGHOUT CONSTRUCTION TO INSURE THAT NO CLEARING AND GRADING OR STAGING OF MATERIALS WILL OCCUR IN THOSE AREAS. [18-458]
7. REGULATED AND SIGNIFICANT TREES IN THE STREET YARD [18-456(C)] AND ANY TREES IN ANY REQUIRED BUFFERS [18-456(B)] ARE REQUIRED TO BE RETAINED. TREE PROTECTION FENCING SHOWN ON PLANS DELINEATES TREES TO BE RETAINED.

Start Node	Invert (Upstream) (ft)	Stop Node	Invert (Downstream) (ft)	Material	Diameter (in)	Length (ft)	Slope (%)	Elevation Ground (Start) (ft)	Elevation Ground (Stop) (ft)	Cover (Start) (ft)	Cover (Stop) (ft)
CB-8	22.25	CB-7	18.60	RCP	15	45	8.10%	26.50	24.70	3.00	4.85
CB-7	18.60	CB-6	18.30	RCP	15	58	0.50%	24.70	22.95	4.85	3.40
CB-9	18.60	CB-6	18.30	RCP	15	62	0.50%	22.50	22.95	2.65	3.40
CB-6	18.30	CB-5	18.00	RCP	15	63	0.50%	22.95	24.50	3.40	5.25
CB-5	18.00	CB-4	17.60	RCP	15	56	0.70%	24.50	24.30	5.25	5.45
CB-12	18.20	CB-10	18.00	RCP	15	41	0.50%	20.85	22.50	1.40	3.25
CB-11	18.30	CB-10	18.00	RCP	15	65	0.50%	21.00	22.50	1.45	3.25
CB-10	18.00	CB-4	17.60	RCP	15	63	0.60%	22.50	24.30	3.25	5.45
CB-4	17.60	CB-3	17.25	RCP	24	70	0.50%	24.30	25.00	4.70	5.75
CB-3	17.25	MH-2	16.00	RCP	24	248	0.50%	25.00	20.90	5.75	2.90
MH-2	16.00	MH-1	15.12	RCP	24	170	0.50%	20.90	21.30	2.90	4.18
MH-1	15.12	OF-A	15.00	RCP	24	23	0.50%	21.30	15.00	4.18	-2.00
CB-29	22.75	CB-28	22.25	RCP	15	98	0.50%	26.50	28.00	2.50	4.50
CB-28	22.25	CB-27	21.85	RCP	15	79	0.50%	28.00	27.50	4.50	4.40
CB-27	21.85	CB-26	20.75	RCP	18	108	1.00%	27.50	26.90	4.15	4.65
CB-26	20.75	CB-25	20.50	RCP	18	27	0.90%	26.90	27.00	4.65	7.00
CB-25	18.50	CB-24	18.25	RCP	18	24	1.00%	27.00	27.00	7.00	7.25
CB-24	18.25	OF-C	18.00	RCP	18	27	0.90%	27.00	18.00	7.25	-1.50
CB-23	21.75	CB-22	20.75	RCP	15	142	0.70%	25.00	25.00	2.00	8.00
CB-22	20.75	CB-21	19.75	RCP	24	123	0.80%	25.00	26.16	2.25	4.41
CB-21	19.75	CB-20	19.50	RCP	24	33	0.80%	26.16	25.90	4.41	4.40
CB-20	19.50	CB-19	19.00	RCP	24	66	0.80%	25.90	26.50	4.40	5.50
CB-19	19.00	CB-18	18.50	RCP	24	71	0.70%	26.50	25.00	5.50	4.50
CB-18	18.50	CB-13	18.25	RCP	24	29	0.90%	25.00	25.00	4.50	4.75
CB-17	19.40	CB-16	19.25	RCP	15	21	0.70%	25.50	25.42	4.85	4.92
CB-16	19.25	CB-14	19.00	RCP	15	56	0.40%	25.42	25.10	4.92	5.10
CB-15	19.00	CB-14	18.75	RCP	15	55	0.50%	25.50	25.10	5.25	5.10
CB-14	18.75	CB-13	18.25	RCP	15	53	0.90%	25.10	25.00	5.10	5.50
CB-13	18.25	OF-B	18.00	RCP	24	44	0.60%	25.00	18.00	4.75	-2.00

NHRMC CARDIOLOGY CENTER

LS3P ASSOCIATES LTD.
2528 INDEPENDENCE BLVD. SUITE 200
WILMINGTON, NORTH CAROLINA 28412
TEL. 910.790.9901 FAX 910.790.3111
WWW.LS3P.COM

NORTH CAROLINA PROFESSIONAL ENGINEER SEAL 025503 RICHARD A. MOORE

REVISIONS:

No.	Description	Date

PROJECT: 04853-0015
DATE: 27 FEBRUARY 2013
DRAWN BY: EEM
CHECKED BY: RAM

GRADING & STORM DRAINAGE PLAN

CG-101

SOLUTIONS THROUGH LISTENING
SERVICE BY DESIGN
DESIGN DEVELOPMENT

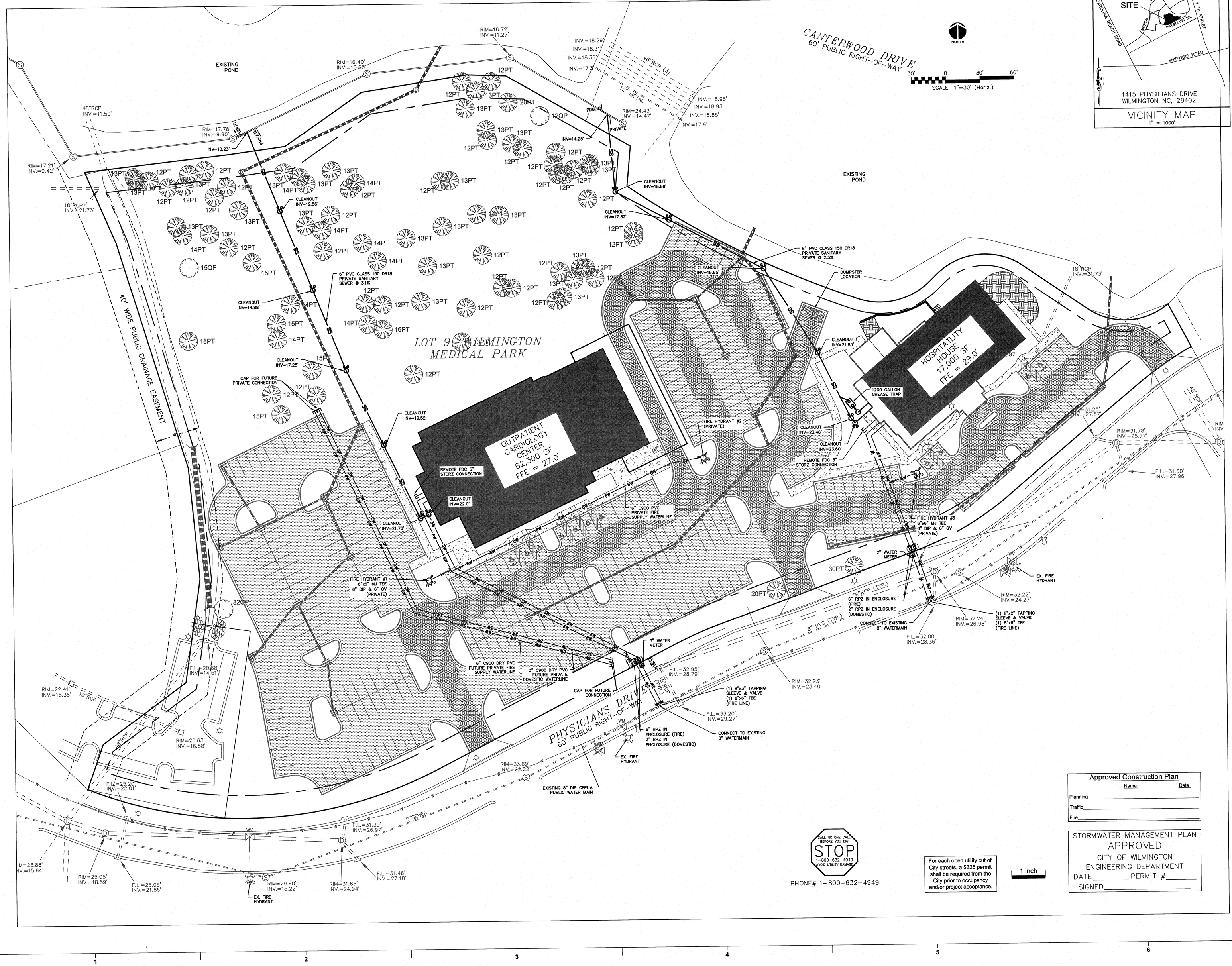

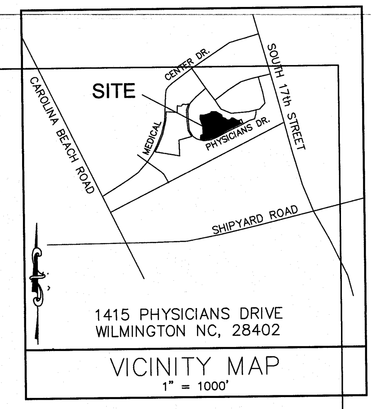

NHRMC CARDIOLOGY CENTER

Approved Construction Plan

	Name	Date
Planning		
Traffic		
Fire		

STORMWATER MANAGEMENT PLAN
APPROVED
CITY OF WILMINGTON
ENGINEERING DEPARTMENT
DATE _____ PERMIT # _____
SIGNED _____

CALL NC ONE CALL BEFORE YOU DIG
STOP
1-800-632-4949
AVOID UTILITY DAMAGE
PHONE# 1-800-632-4949

For each open utility cut of City streets, a $325 permit shall be required from the City prior to occupancy and/or project acceptance.

1 inch

LS3P ASSOCIATES LTD.
2528 INDEPENDENCE BLVD. SUITE 200
WILMINGTON, NORTH CAROLINA 28412
TEL. 910.790.9901 FAX 910.790.3111
WWW.LS3P.COM

NORTH CAROLINA REGISTERED LANDSCAPE ARCHITECT SEAL 025503 ENGINEER RICHARD A. MOORE

REVISIONS:

No.	Description	Date

PROJECT: 04853-0015
DATE: 27 FEBRUARY 2013
DRAWN BY: EEM
CHECKED BY: RAM

UTILITY PLAN

CU-101

SOLUTIONS THROUGH LISTENING
SERVICE BY DESIGN
DESIGN DEVELOPMENT

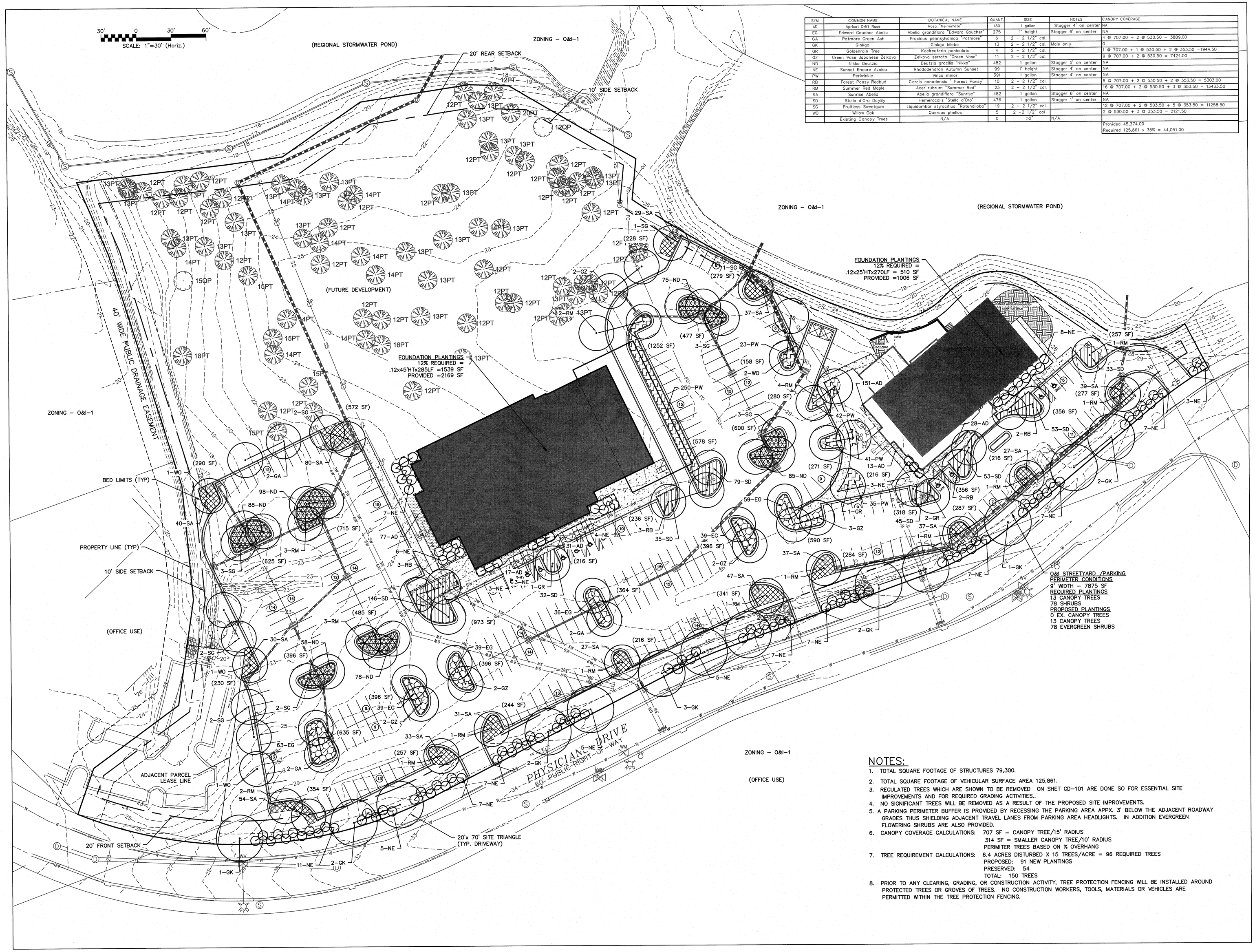

SYM	COMMON NAME	BOTANICAL NAME	QUANT	SIZE	NOTES	CANOPY COVERAGE
AD	Apricot Drift Rose	Rosa 'Meimirorte'	180	1 gallon	Stagger 4' on center	NA
EG	Edward Goucher Abelia	Abelia grandiflora "Edward Goucher"	275	1' height	Stagger 6' on center	NA
GA	Patmore Green Ash	Fraxinus pennsylvanica "Patmore"	6	2 – 2 1/2" cal.		4 @ 707.00 + 2 @ 530.50 = 3889.00
GK	Ginkgo	Ginkgo biloba	13	2 – 2 1/2" cal.	Male only	0
GR	Goldenrain Tree	Koelreuteria paniculata	4	2 – 2 1/2" cal.		1 @ 707.00 + 1 @ 530.50 + 2 @ 353.50 =1944.50
GZ	Green Vase Japanese Zelkova	Zelkova serrata "Green Vase"	11	2 – 2 1/2" cal.		9 @ 707.00 + 2 @ 530.50 = 7424.00
ND	Nikko Deutzia	Deutzia gracilis "Nikko"	482	1 gallon	Stagger 5' on center	NA
NE	Sunset Encore Azalea	Rhododendron Autumn Sunset	99	1' height	Stagger 4' on center	NA
PW	Periwinkle	Vinca minor	391	1 gallon	Stagger 4' on center	NA
RB	Forest Pansy Redbud	Cercis canadensis ' Forest Pansy'	10	2 – 2 1/2" cal.		5 @ 707.00 + 2 @ 530.50 + 2 @ 353.50 = 5303.00
RM	Summer Red Maple	Acer rubrum "Summer Red"	23	2 – 2 1/2" cal.		16 @ 707.00 + 2 @ 530.50 + 3 @ 353.50 = 13433.50
SA	Sunrise Abelia	Abelia grandiflora "Sunrise"	482	1 gallon	Stagger 6' on center	NA
SD	Stella d'Oro Daylily	Hemerocallis 'Stella d'Oro'	476	1 gallon	Stagger 1' on center	NA
SG	Fruitless Sweetgum	Liquidambar styraciflua "Rotundiloba"	19	2 – 2 1/2" cal.		12 @ 707.00 + 2 @ 503.50 + 5 @ 353.50 = 11258.50
WO	Willow Oak	Quercus phellos	5	2 – 2 1/2" cal.		2 @ 530.50 + 3 @ 353.50 = 2121.50
	Existing Canopy Trees	N/A	0	>2"	N/A	
						Provided 45,374.00
						Required 125,861 x 35% = 44,051.00

NOTES:

1. TOTAL SQUARE FOOTAGE OF STRUCTURES 79,300.
2. TOTAL SQUARE FOOTAGE OF VEHICULAR SURFACE AREA 125,861.
3. REGULATED TREES WHICH ARE SHOWN TO BE REMOVED ON SHET CD–101 ARE DONE SO FOR ESSENTIAL SITE IMPROVEMENTS AND FOR REQUIRED GRADING ACTIVITIES..
4. NO SIGNIFICANT TREES WILL BE REMOVED AS A RESULT OF THE PROPOSED SITE IMPROVEMENTS.
5. A PARKING PERIMETER BUFFER IS PROVIDED BY RECESSING THE PARKING AREA APPX. 3' BELOW THE ADJACENT ROADWAY GRADES THUS SHIELDING ADJACENT TRAVEL LANES FROM PARKING AREA HEADLIGHTS. IN ADDITION EVERGREEN FLOWERING SHRUBS ARE ALSO PROVIDED.
6. CANOPY COVERAGE CALCULATIONS: 707 SF = CANOPY TREE/15' RADIUS
   314 SF = SMALLER CANOPY TREE/10' RADIUS
   PERIMITER TREES BASED ON ½ OVERHANG
7. TREE REQUIREMENT CALCULATIONS: 6.4 ACRES DISTURBED X 15 TREES/ACRE = 96 REQUIRED TREES
   PROPOSED: 91 NEW PLANTINGS
   PRESERVED: 54
   TOTAL: 150 TREES
8. PRIOR TO ANY CLEARING, GRADING, OR CONSTRUCTION ACTIVITY, TREE PROTECTION FENCING WILL BE INSTALLED AROUND PROTECTED TREES OR GROVES OF TREES. NO CONSTRUCTION WORKERS, TOOLS, MATERIALS OR VEHICLES ARE PERMITTED WITHIN THE TREE PROTECTION FENCING.

NHRMC CARDIOLOGY CENTER

LS3P ASSOCIATES LTD.
2528 INDEPENDENCE BLVD. SUITE 200
WILMINGTON, NORTH CAROLINA 28412
TEL. 910.790.9901 FAX 910.790.3111
WWW.LS3P.COM

NORTH CAROLINA REGISTERED LANDSCAPE ARCHITECT
MARGARET A. GRAY
No. 656
02/27/13

REVISIONS:

No.	Description	Date

PROJECT: 04853-0015
DATE: 27 FEBRUARY 2013
DRAWN BY: EEM
CHECKED BY: RAM

LANDSCAPE PLAN

CL-101

SOLUTIONS THROUGH LISTENING
SERVICE BY DESIGN
DESIGN DEVELOPMENT

GENERAL CONSTRUCTION NOTES:

1. CONSTRUCTION SHALL BE IN ACCORDANCE WITH THE STANDARDS AND SPECIFICATIONS OF THE CITY OF WILMINGTON, NORTH CAROLINA UNLESS OTHERWISE NOTED.
2. ALL TREES, STUMPS, ROOT MAT, ETC. SHALL BE ENTIRELY REMOVED REGARDLESS OF DEPTH. BURIAL OF ORGANIC MATERIAL WITHIN THE PROJECT LIMITS IS NOT PERMITTED. OPEN BURNING OF DOWNED TREES AND STUMPS IS PERMITTED. HOWEVER, CONTRACTOR IS RESPONSIBLE FOR OBTAINING ALL REQUIRED PERMITS. CHIPPED MATERIALS MUST BE REMOVED PRIOR TO THE PLACEMENT OF EMBANKMENT OR TOPSOIL.
3. THE CONTRACTOR IS SOLELY RESPONSIBLE TO OBTAIN OFF-SITE SPOIL AREAS FOR DISPOSAL OF EXCESS AND/OR UNSUITABLE MATERIALS AS NECESSARY. OFF-SITE SPOIL AREAS MUST BE SUBMITTED TO THE ENGINEER FOR REVIEW AND APPROVAL BY APPLICABLE REGULATORY AGENCIES AND PRIOR TO UTILIZATION BY THE CONTRACTOR. NO AREAS DESIGNATED AS WETLANDS WILL BE PERMITTED FOR USE AS A DISPOSAL SITE. THE CONTRACTOR SHALL SUBMIT DOCUMENTATION TO THE ENGINEER THAT NO WETLANDS WILL BE IMPACTED. THE ENGINEER WILL NOT CONSIDER ANY DELAYS OR MONETARY CLAIMS OF ANY NATURE RESULTING FROM THE CONTRACTOR'S FAILURE OR DIFFICULTY IN FINDING NECESSARY DISPOSAL SITES TO MEET THE TIME FRAMES REQUIRED. THE CONTRACTOR SHALL BE RESPONSIBLE FOR ALL PLANS, PERMITS, EROSION AND SEDIMENT CONTROL MEASURES, ETC. REQUIRED BY THE APPROPRIATE REGULATORY AGENCIES FOR UTILIZING OFF-SITE SPOIL AREAS. THE CONTRACTOR SHALL CERTIFY TO THE ENGINEER THAT ALL REQUIRED PERMITS HAVE BEEN OBTAINED PRIOR TO UTILIZING THE OFF-SITE SPOIL AREAS. ALL COSTS FOR PROCURING AND UTILIZING THE OFF-SITE SPOIL AREAS ARE TO BE INCIDENTAL TO THE BASE BID.
4. APPROVED COVERS TO PREVENT MATERIAL FROM LEAVING THE TRUCKS MUST BE INSTALLED OVER ALL LOADED TRUCKS HAULING BORROW EXCAVATED MATERIAL AND/OR FINE AGGREGATES TO OR FROM THE PROJECT SITES OVER STATE MAINTAINED ROADS. THE TRUCKS SHALL BE FULLY COVERED TO PREVENT MATERIAL FROM LEAVING THE TRUCK DURING HAULING. ANY MATERIALS DELIVERED, TRANSPORTED, OR REMOVED IN UNCOVERED TRUCKS WILL BE INCORPORATED INTO THE PROJECT OR REMOVED FROM THE SITE WITH NO ADDITIONAL PAYMENT TO THE CONTRACTOR FOR FURNISHING, REMOVING, OR PLACING THE MATERIALS INVOLVED.
5. DRIVEWAYS ARE NOT TO BE LOCATED OVER WATER METERS OR SEWER CLEANOUTS, METERS WILL NOT BE SET IF WATER METER BOXES, SEWER CLEAN-OUTS, VALVE BOXES OR OTHER APPURTENANCES ARE DAMAGED OR IMPROPERLY POSITIONED.
6. EXISTING PAVING, CONCRETE, AND OTHER UNSUITABLE MATERIALS SHALL NOT BE USED AS FILL AND SHALL BE DISPOSED OF OUTSIDE THE PROJECT LIMITS AT THE CONTRACTOR'S EXPENSE. CONTRACTOR IS RESPONSIBLE FOR PERMITTING AND FEES FOR DISPOSAL.

GENERAL NOTES

1. IN ACCORDANCE WITH N.C.G.S. 136-44.14, ALL STREET CURBS BEING CONSTRUCTED OR RECONSTRUCTED SHALL PROVIDE WHEELCHAIR RAMPS FOR THE PHYSICALLY HANDICAPPED ON EACH SIDE OF ANY STREET OR ROAD, WHERE CURBS AND SIDEWALKS ARE PROVIDED AND AT OTHER MAJOR POINTS OF PEDESTRIAN FLOW.
2. WHEELCHAIR RAMPS SHALL BE LOCATED AS INDICATED IN DETAIL DRAWINGS; HOWEVER, EXISTING LIGHT POLES, FIRE HYDRANTS, DROP INLETS, ETC. MAY AFFECT PLACEMENT.
3. CURB RAMPS SHALL HAVE DETECTABLE WARNINGS EXTENDING THE FULL WIDTH OF THE RAMP AND A MINIMUM OF 2-FT. IN LENGTH.

CONSTRUCTION NOTES

1. CONSTRUCTION SHALL CONFORM WITH CONSTRUCTION STANDARDS OF THE GOVERNING BODY WHICH HAS JURISDICTION OF THE PARTICULAR STREET.
2. WHEELCHAIR RAMPS SHALL BE CONSTRUCTED OF CLASS "A" CONCRETE WITH THE SURFACE HAVING A ROUGH, NON-SKID TYPE FINISH.
3. A ½-IN. EXPANSION JOINT SHALL BE REQUIRED WHERE THE CONCRETE WHEELCHAIR RAMP JOINS ANY RIGID PAVEMENT OR STRUCTURE.
4. IN NO CASE SHALL THE WIDTH OF A CURB RAMP OR CURB CUT BE LESS THAN 40-IN. (3-FT. 4-IN.), NOT INCLUDING THE FLARED SIDES.
5. TRANSITIONS FROM RAMPS TO WALKS, GUTTERS OR STREETS SHALL BE FLUSH AND FREE OF ABRUPT CHANGES.
6. THE MAXIMUM SLOPE ON THE CURB RAMP RUN IS 1:12.
7. THE MAXIMUM CROSS SLOPE OF THE CURB RAMP IS 1:50.
8. MAXIMUM SLOPES OF ADJOINING GUTTERS, ROAD SURFACE IMMEDIATELY ADJACENT TO THE CURB RAMP, OR ACCESSIBLE ROUTE SHALL NOT EXCEED 1:20.
9. ANY RAISED ISLANDS IN CROSSINGS SHALL BE CUT THROUGH LEVEL WITH THE STREET OR HAVE CURB RAMPS AT BOTH SIDES AND A LEVEL AREA AT LEAST 48-IN. LONG BETWEEN THE CURB RAMPS.
10. DETECTABLE WARNINGS SHALL CONSIST OF RAISED TRUNCATED DOMES WITH A DIAMETER OF NOMINAL 0.9-IN., A HEIGHT OF NOMINAL 0.2-IN. AND A CENTER-TO-CENTER SPACING OF NOMINAL 2.35-IN. AND SHALL CONTRAST VISUALLY WITH ADJOINING SURFACES, EITHER LIGHT-ON-DARK, OR DARK-ON-LIGHT.

ADDITIONAL NOTES

1. STOP BARS SHALL BE USED WHERE IT IS IMPORTANT TO INDICATE THE POINT BEHIND WHICH VEHICLES ARE REQUIRED TO STOP IN COMPLIANCE WITH A TRAFFIC SIGNAL, STOP SIGN OR OTHER LEGAL REQUIREMENT.
2. PARKING SHALL BE ELIMINATED A MINIMUM OF 20 FEET BACK OF THE PEDESTRIAN CROSSWALK.
3. ALL PAVEMENT MARKINGS SHALL BE IN ACCORDANCE WITH THE LATEST EDITION OF THE MANUAL OF UNIFORM TRAFFIC CONTROL DEVICES, PUBLISHED BY THE FEDERAL HIGHWAY ADMINISTRATION. THIS DOCUMENT IS AVAILABLE FROM THE SUPERINTENDENT OF DOCUMENTS, U.S. GOVERNMENT PRINTING OFFICE, WASHINGTON, D.C. 20402.
4. CURB RAMPS AT MARKED CROSSINGS SHALL BE WHOLLY CONTAINED WITHIN THE MARKINGS, EXCLUDING ANY FLARED SIDES.
5. THE BOTTOM OF DIAGONAL (CORNER TYPE) CURB RAMPS AT MARKED CROSSINGS SHALL HAVE 48-IN. MINIMUM CLEAR SPACE WITHIN THE MARKINGS.
6. IF DIAGONAL CURB RAMPS HAVE FLARED SIDES, THEY SHALL HAVE AT LEAST A 24-IN. LONG SEGMENT OF STRAIGHT CURB LOCATED ON EACH SIDE OF THE CURB RAMP AND WITHIN THE MARKED CROSSING.

SD 8-09

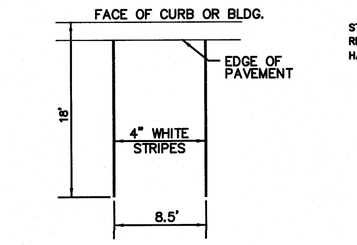

TYPICAL PARKING STALL

NOT TO SCALE

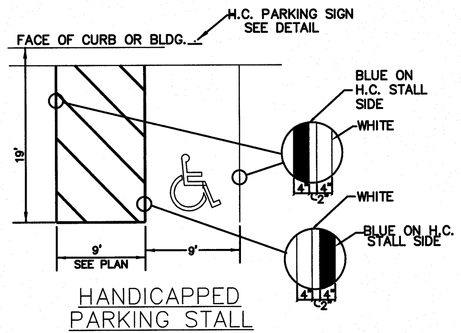

HANDICAPPED PARKING STALL

NOT TO SCALE

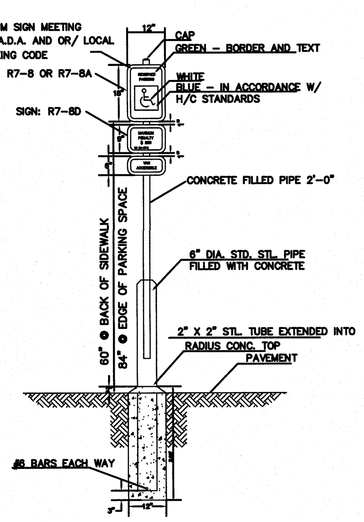

HANDICAP PARKING SIGN

NOT TO SCALE

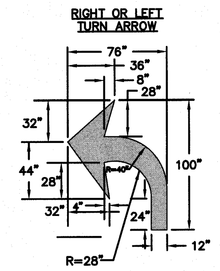

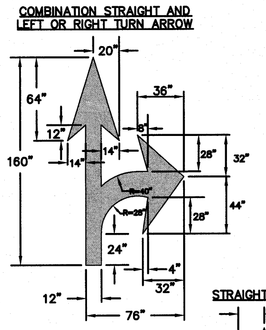

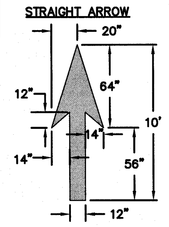

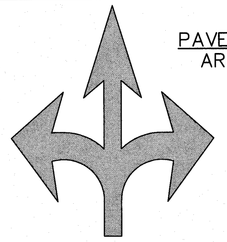

PAVEMENT MARKINGS
ARROW SYMBOLS
SD 11-03

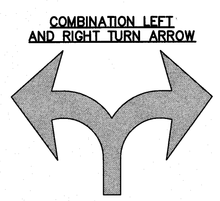

GENERAL NOTES

-ALL PAVEMENT MARKING SYMBOLS SHALL BE WHITE IN COLOR
-PAVEMENT MARKING SYMBOLS SHALL NOT BE LOCATED AS TO ENCROACH INTO INTERSECTION AREA.
-ON PORTLAND CEMENT CONCRETE PAVEMENTS, PAVEMENT MARKING SYMBOLS SHALL NOT BE PLACED ACROSS TRANSVERSE EXPANSION JOINTS UNLESS APPROVED BY THE ENGINEER.

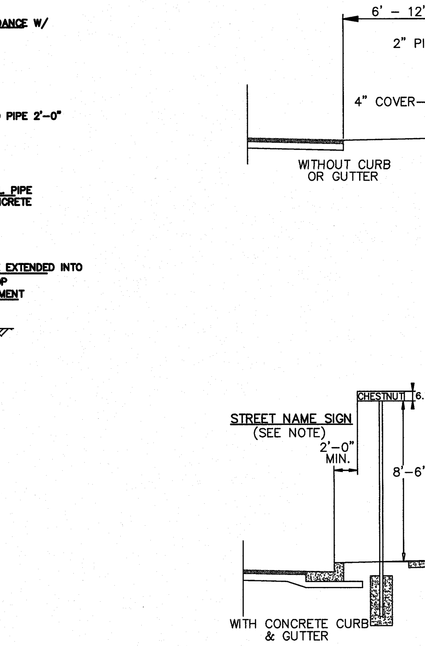

PAVEMENT MARKING DETAIL

NOT TO SCALE

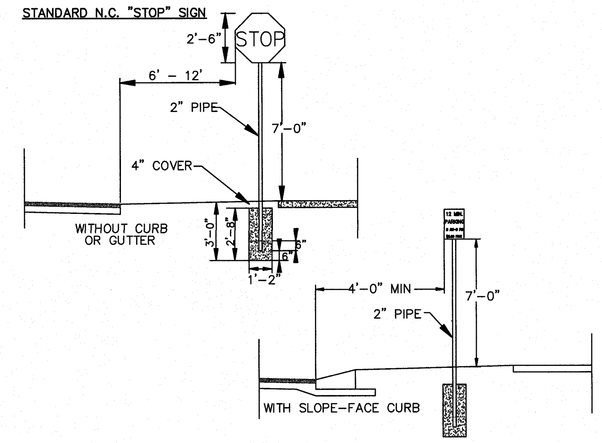

STANDARD INFORMATION SIGN

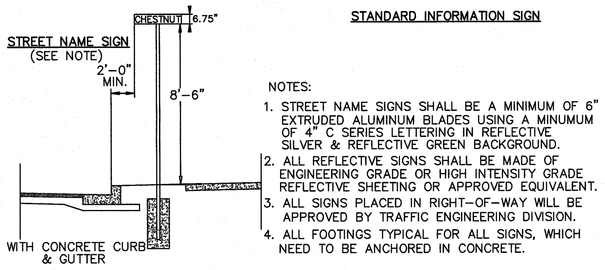

NOTES:
1. STREET NAME SIGNS SHALL BE A MINIMUM OF 6" EXTRUDED ALUMINUM BLADES USING A MINUMUM OF 4" C SERIES LETTERING IN REFLECTIVE SILVER & REFLECTIVE GREEN BACKGROUND.
2. ALL REFLECTIVE SIGNS SHALL BE MADE OF ENGINEERING GRADE OR HIGH INTENSITY GRADE REFLECTIVE SHEETING OR APPROVED EQUIVALENT.
3. ALL SIGNS PLACED IN RIGHT-OF-WAY WILL BE APPROVED BY TRAFFIC ENGINEERING DIVISION.
4. ALL FOOTINGS TYPICAL FOR ALL SIGNS, WHICH NEED TO BE ANCHORED IN CONCRETE.

STANDARD SIGN INSTALLATION LOCATION
SD 15-03

NOT TO SCALE

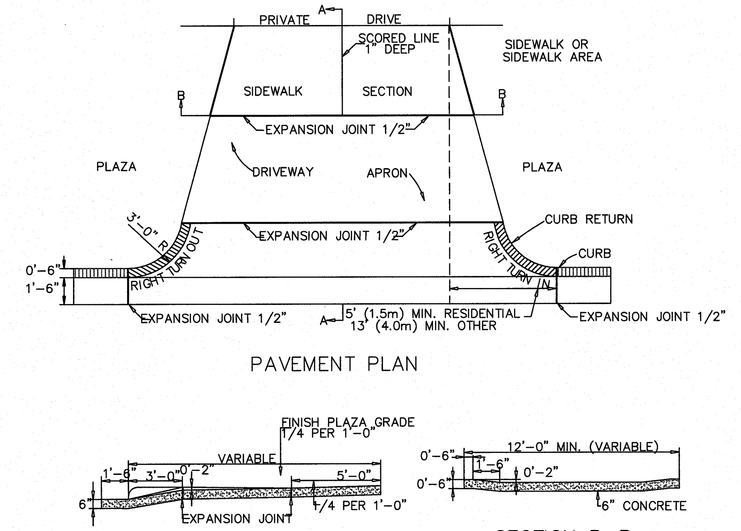

PAVEMENT PLAN

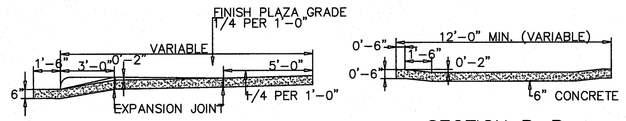

STANDARD DRIVEWAY DETAIL

SD 8-02

NOT TO SCALE

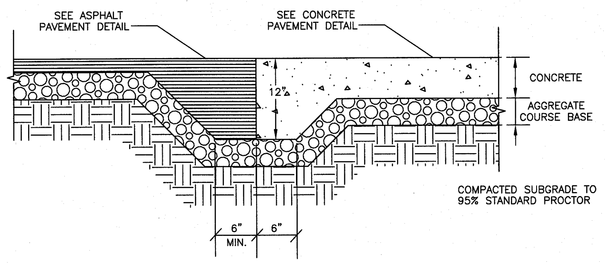

ASPHALT TO CONCRETE TRANSITION

NOT TO SCALE

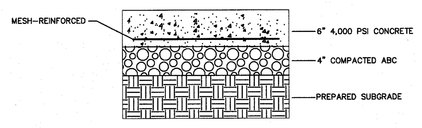

PAVEMENT SHALL BE CONSTRUCTED OF 4,000 PSI CONCRETE. REINFORCEMENT SHALL BE WELDED WIRE FABRIC SPACED 6" O. C. BOTH DIRECTIONS, AS INDICATED BELOW. SURFACE FINISHES AND JOINTS SHALL BE AS INDICATED IN SPECIFICATIONS.

CONCRETE PAVEMENT SECTION
(DUMPSTER PAD)

NOT TO SCALE

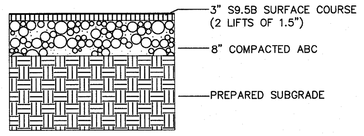

ASPHALT PAVEMENT SECTION
(HEAVY DUTY PAVEMENT)

NOT TO SCALE

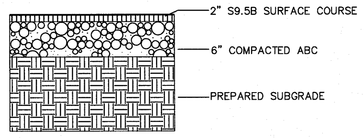

ASPHALT PAVEMENT SECTION
(LIGHT DUTY PAVEMENT)

NOT TO SCALE

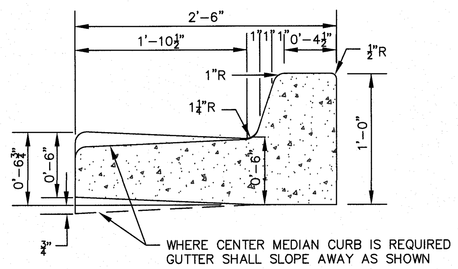

STANDARD CURB SECTION TYPE "A"
(MODIFIED FOR 30" CURB & GUTTER)
SD 7-01

NOT TO SCALE

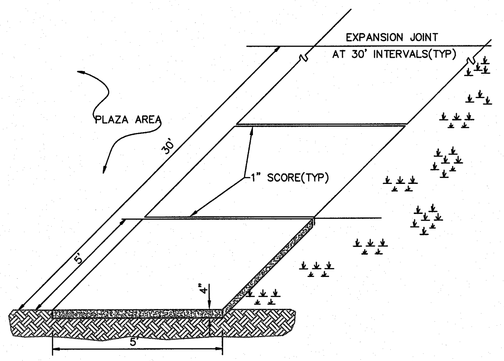

STANDARD SIDEWALK DETAIL
SD 8-15

NOT TO SCALE

Approved Construction Plan

Name Date

Planning_____

Traffic_____

Fire_____

STORMWATER MANAGEMENT PLAN
APPROVED
CITY OF WILMINGTON
ENGINEERING DEPARTMENT
DATE_____ PERMIT #_____
SIGNED_____

For each open utility cut of City streets, a $325 permit shall be required from the City prior to occupancy and/or project acceptance.

1 inch

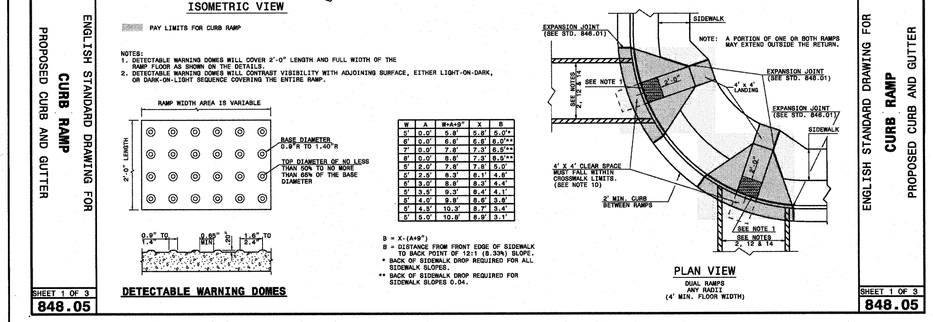

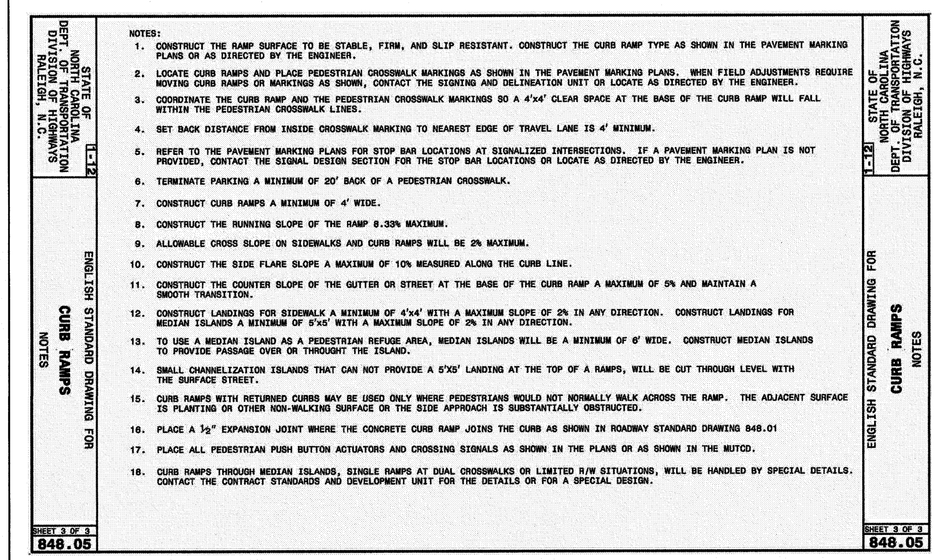

NHRMC CARDIOLOGY CENTER

LS3P ASSOCIATES LTD.
2528 INDEPENDENCE BLVD. SUITE 200
WILMINGTON, NORTH CAROLINA 28412
TEL. 910.790.9901 FAX 910.790.3111
WWW.LS3P.COM

NORTH CAROLINA REGISTERED LANDSCAPE ARCHITECT SEAL 02553 ENGINEER WILLIAM A. MOORE 2-27-13

REVISIONS:

No.	Description	Date

PROJECT: 04853-0015
DATE: 27 FEBRUARY 2013
DRAWN BY: EEM
CHECKED BY: RAM

SITE DETAILS

CS-501

SOLUTIONS THROUGH LISTENING

SERVICE BY DESIGN

DESIGN DEVELOPMENT

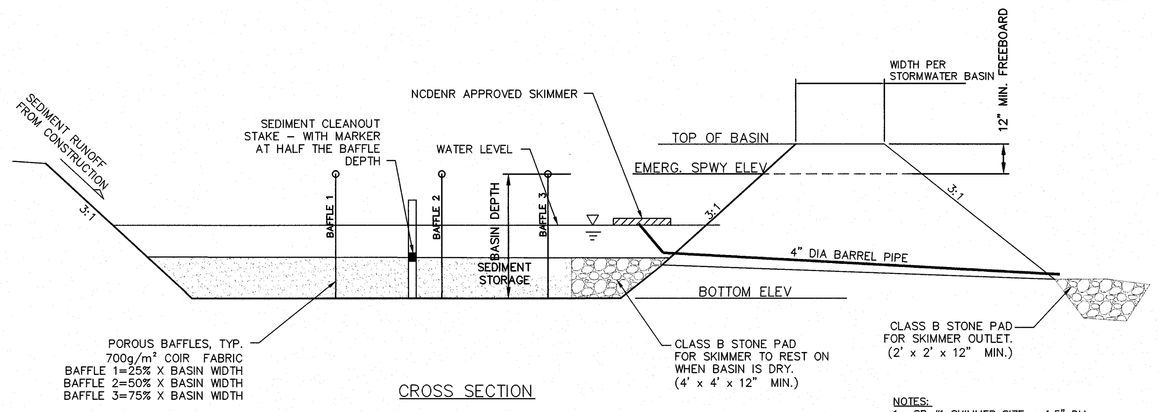

CROSS SECTION

SKIMMER BASIN
NOT TO SCALE

NOTES
1. LOCATE THE EMERGENCY SPILLWAY ON NATURAL SOILS. AVOID PLACING IT THROUGH FILL MATERIAL WHEREVER POSSIBLE.
2. ALL RUNOFF MUST DISCHARGE TO THE INLET SIDE OF THE BASIN. DISCHARGE RUNOFF INTO THE BASIN IN A MANNER THAT MINIMIZES EROSION.

NOTES:
1. SB #1 SKIMMER SIZE = 1.5" DIA.
2. SB #2 SKIMMER SIZE = 2.0" DIA.
3. ORIFICE SIZES ARE FOR THE FAIRCLOTH SKIMMER. IF ANOTHER TYPE OF SKIMMER IS USED THE DEVICE MUST BE ABLE TO DRAIN THE BASIN WITHIN 72 HOURS.

SKIMMER BASIN CALCULATION TABLE

Skimmer No.	Drainage Area ac	Rational C Runoff Coeff.	Time of Conc. Tc min	I10 Intensity in/hr	Q10 Peak Flow cfs	Required SA (325 x Q10) sf	Provided SA sf	Required Vol (1800sf/cfs x Q10) cf	Basin Depth D ft	Provided Vol Basin Depth cf	Weir Width ft
SB-1	1.25	0.35	5.00	7.23	3.04	987	1,250	2,160	4.00	2,846	10.0
SB-2	3.28	0.23	5.00	7.23	3.93	1,307	2,312	3,904	4.00	4,630	10.0

FAIRCLOTH SKIMMER SIZE CALCULATION - PHASE 1

Skimmer No.	Dewatering Time (days)	Skimmer Outflow cf/day	Skimmer Size in	Orifice Diameter in	Orifice Radius in	Barrel Outflow gpm	Barrel Pipe in
SB-1	3	949	1.5	0.9	0.5	4.9	4.0
SB-2	3	2,077	2.0	1.2	0.6	10.8	4.0

Faircloth Skimmer Selection Table

Skimmer Size in	Outflow Qmax cf/day	Head ft
1.5	1,728	0.125
2	3,283	0.167
2.5	6,234	0.208
3	9,774	0.250
4	22,059	0.333
5	32,832	0.333
6	51,840	0.417
8	92,978	0.500

NOTES:
1. Q10 Peak Flow were taken from Rational Method.
2. Required Surface Areas and Volumes were taken from NCDENR Sediment & Erosion Manual.
3. Faircloth Skimmer Selection Table taken from Table 4-2: NCDOT Level III-A Design of Sediment & Erosion Control Plans Manual

SKIMMER DETAIL
NOT TO SCALE

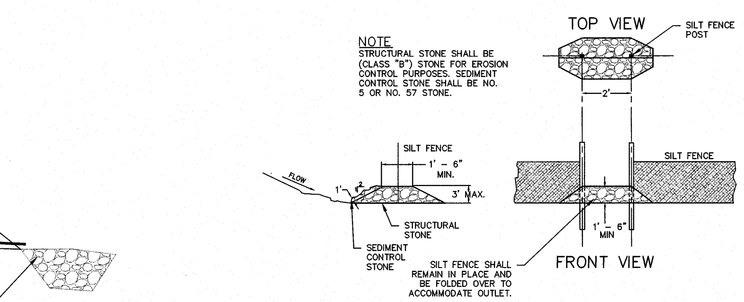

SILT FENCE STONE OUTLET
NOT TO SCALE

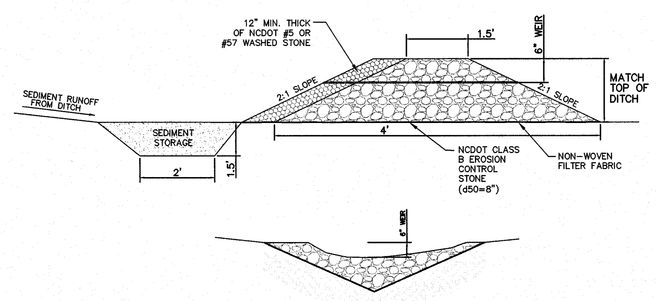

STONE SECTION WITH A WEIR

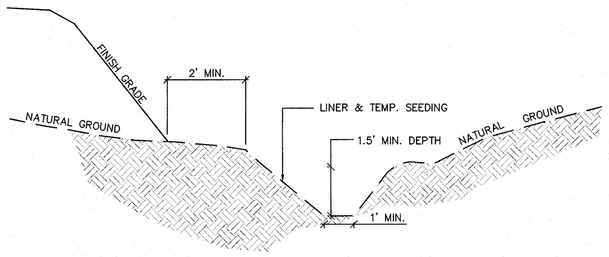

TEMPORARY PERIMETER DIKE
NOT TO SCALE

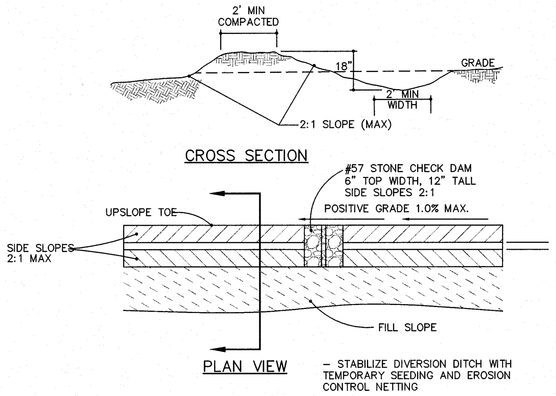

TEMPORARY DIVERSION DITCH
NOT TO SCALE

Temporary Perimeter Dike Calculations

									TEMPORARY ROCK CHECK DAMS		
Perm Dike NUMBER	LENGTH (FT)	HIGH (FT)	LOW (FT)	ELEVATION DIFF. (FT)	SLOPE (%)	VELOCITY (FPS)	LINING	Manning n	CHECK DAM SPACING (FT)	NUMBER REQUIRED	NUMBER PROVIDED
TPD 1	214	21.00	16.00	5.00	2.34	0.31	GRASS	0.035	86	3	4

Temporary Diversion Ditch Calculations

TDD NUMBER	LENGTH (FT)	HIGH (FT)	LOW (FT)	ELEVATION DIFF. (FT)	SLOPE (%)	MANNING n	VELOCITY (FPS)	LINING
TDD1	206	31.00	27.00	4.00	1.94	0.020	0.49	BARE EARTH
TDD2	92	28.00	27.00	1.00	1.09	0.020	0.10	BARE EARTH
TDD3	411	27.00	20.00	7.00	1.70	0.020	0.61	BARE EARTH
TDD4	401	28.50	20.00	8.50	2.12	0.020	0.52	BARE EARTH

									TEMPORARY ROCK CHECK DAMS		
TDD NUMBER	DA (AC)	DEPTH (IN)	FLOW DEPTH (IN)	SIDE SLOPES H:V	SLOPE (%)	MANNING n	VELOCITY (FPS)	LINING	CHECK DAM SPACING (FT)	NUMBER REQUIRED	NUMBER PROVIDED
TDD1	1.00	18	12	3	1.94	0.035	0.49	GRASS	103	2	2
TDD2	0.20	18	12	3	1.09	0.035	0.10	GRASS	184	1	1
TDD3	1.77	18	12	3	1.70	0.035	0.61	GRASS	117	4	4
TDD4	1.51	18	12	3	2.12	0.035	0.52	GRASS	94	4	4

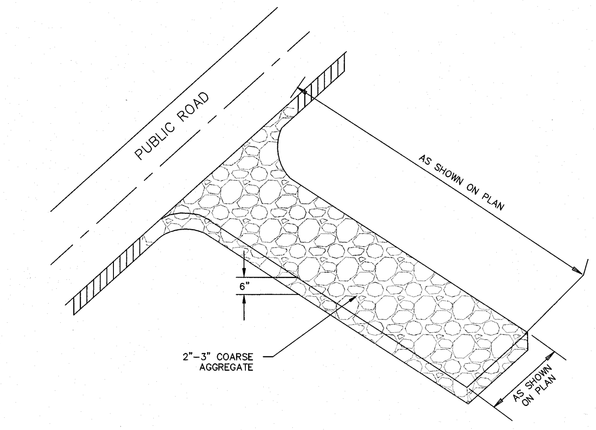

CONSTRUCTION ENTRANCE/EXIT
SD 13-03
NOT TO SCALE

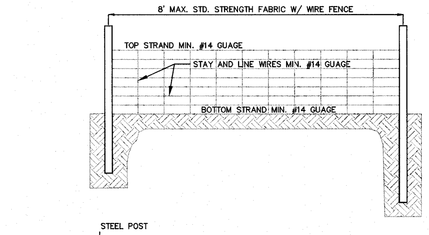

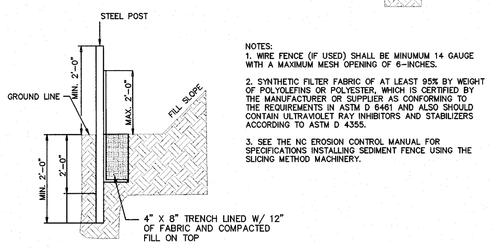

NOTES:
1. WIRE FENCE (IF USED) SHALL BE MINIMUM 14 GAUGE WITH A MAXIMUM MESH OPENING OF 6-INCHES.
2. SYNTHETIC FILTER FABRIC OF AT LEAST 50% BY WEIGHT OF POLYOLEFINS OR POLYESTER, WHICH IS CERTIFIED BY THE MANUFACTURER OR SUPPLIER AS CONFORMING TO THE REQUIREMENTS IN ASTM D 6461 AND ALSO SHOULD CONTAIN ULTRAVIOLET RAY INHIBITORS AND STABILIZERS ACCORDING TO ASTM D 4355.
3. SEE THE NC EROSION CONTROL MANUAL FOR SPECIFICATIONS INSTALLING SEDIMENT FENCE USING THE SLICING METHOD MACHINERY.

TEMPORARY SILT FENCE
NOT TO SCALE

Silt Fence Table

SILT FENCE	DRAINAGE AREA (AC)	LENGTH (LF)	AC per 100 LF	1/4-AC per 100 LF "yes" or no"
SF 1	0.93	409	0.23	yes
SF 2	0.24	439	0.05	yes
SF 3	0.64	553	0.12	yes

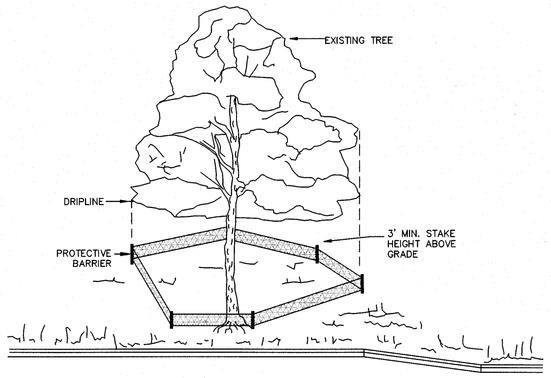

NOTE
TREES TO BE SAVED WILL BE CLEARLY MARKED PRIOR TO CONSTRUCTION AND A PROTECTIVE BARRIER IS TO BE INSTALLED AT THE DRIPLINE. DRIP LINE – THE AREA OF SOIL DIRECTLY BENEATH THE TREE EXTENDING OUT TO THE TIPS OF THE OUTERMOST BRANCHES.

METHOD OF TREE PROTECTION DURING CONSTRUCTION
SD 15-08
NOT TO SCALE

TREE PROTECTION NOTES:

1. NO LAND DISTURBANCE INCLUDING TREE REMOVAL IS TO OCCUR OUTSIDE THE LIMITS OF DISTURBANCE SHOWN ON THE PLANS. [18-457(b)]
2. PROTECTIVE FENCING IS TO BE PROPERLY MAINTAINED THROUGHOUT THE DURATION OF THE PROJECT. [18-458]
3. LAND CLEARING AND CONSTRUCTION CONTRACTORS SHALL RECEIVE ADEQUATE INSTRUCTION ON TREE PROTECTION REQUIREMENTS AND METHODS. [18-457(a)]
4. ANY TREES AND/OR AREAS DESIGNATED TO BE PROTECTED MUST PROPERLY BARRICADED WITH FENCING AND PROTECTED THROUGHOUT CONSTRUCTION TO INSURE THAT NO CLEARING AND GRADING OR STAGING OF MATERIALS WILL OCCUR IN THOSE AREAS. [18-458]
5. NO EQUIPMENT IS ALLOWED ON THE SITE UNTIL ALL TREE PROTECTION FENCING AND SILT FENCING HAS BEEN INSTALLED AND APPROVED. [18-458]
6. REGULATED AND SIGNIFICANT TREES IN THE STREET YARD [18-456(c)] AND ANY TREES IN ANY REQUIRED BUFFERS [18-456(b)] ARE REQUIRED TO BE RETAINED.

SEEDBED PREPARATION:

1. CHISEL COMPACTED AREAS AND SPREAD TOPSOIL 3 INCHES DEEP OVER ADVERSE SOIL CONDITIONS, IF AVAILABLE.
2. RIP THE ENTRANCE AREA TO 6 INCHES DEPTH.
3. REMOVE ALL LOOSE ROCK, ROOTS, AND OTHER OBSTRUCTIONS LEAVING SURFACE REASONABLY SMOOTH AND UNIFORM.
4. APPLY AGRICULTURAL LIME, FERTILIZER, AND SUPERPHOSPHATE UNIFORMLY AND MIX WITH SOIL (SEE BELOW*).
5. CONTINUE TILLAGE UNTIL A WELL – PULVERIZED, FIRM, REASONABLY UNIFORM SEEDBED IS PREPARED 4 TO 6 INCHES DEEP.
6. SEED ON A FRESHLY PREPARED SEEDBED AND COVER SEED LIGHTLY WITH SEEDING EQUIPMENT OR CULTIPACK AFTER SEEDING.
7. MULCH IMMEDIATELY AFTER SEEDING AND ANCHOR MULCH.
8. INSPECT ALL SEEDED AREAS AND MAKE NECESSARY REPAIRS OR RESEEDINGS WITHIN THE PLANTING SEASON, IF POSSIBLE. IF STAND SHOULD BE OVER 60% DAMAGED, REESTABLISH FOLLOWING ORIGINAL LIME, FERTILIZER AND SEEDING RATES.
9. CONSULT CONSERVATION INSPECTOR ON MAINTENANCE TREATMENT AND FERTILIZATION AFTER PERMANENT COVER IS ESTABLISHED.
10. APPLY:
    AGRICULTURAL LIMESTONE – 2 TONS/ACRE
    FERTILIZER – 1000 LBS/ACRE (10-10-10)
    SUPERPHOSPHATE – 500 LBS/ACRE (20%)
    MULCH – 2 TONS/ACRE (SMALL GRAIN STRAW)
    ANCHOR – ASPHALT EMULSION AT 450 GAL/ACRE

TEMPORARY SEEDING			
GRASS TYPE	AMOUNT/ 1000 S.F.	TIME OF SEEDING	INITIAL
RYE GRAIN	1–2 LBS.	APRIL – JUNE	25 LBS. 10–10–10
BROWNTOP MILLET	1–2 LBS	JUNE – AUGUST	25 LBS 10–10–10

PERMANENT SEEDING			
GRASS TYPE	AMOUNT/ 1000 S.F.	TIME OF SEEDING	INITIAL
BERMUDA, COMMON	1–2 LBS.	APRIL – JUNE	25 LBS. 10–10–10
FESCUE, TALL (KENTUCKY 31)	5–7 LBS	JUNE – AUGUST FEB. – OCT.	25 LBS 10–10–10
SERICEA LESPEDEZA (SLOPES	1–2 LBS	MARCH – APRIL	25 LBS 10–10–10

GROUND STABILIZATION CRITERIA		
SITE AREA DESCRIPTION	STABILIZATION TIMEFRAME	STABILIZATION TIMEFRAME EXCEPTIONS
PERIMETER DIKES, SWALES, DITCHES AND SLOPES	7 DAYS	NONE
HIGH QUALITY WATER ZONES	7 DAYS	NONE
SLOPES STEEPER THAN 3:1	7 DAYS	IF SLOPES ARE 10 FT OR LESS IN IN LENGTH AND ARE NOT STEEPER THAN 2:1, 14 DAYS ARE ALLOWED
SLOPES 3:1 OR FLATTER	14 DAYS	7 DAYS FOR SLOPES GREATER THAN 50 FT IN LENGTH
ALL OTHER AREAS WITH SLOPES FLATTER THAN 4:1	14 DAYS	NONE (EXCEPT FOR PERIMETERS AND HQW ZONES)

Approved Construction Plan

	Name	Date
Planning		
Traffic		
Fire		

STORMWATER MANAGEMENT PLAN
APPROVED
CITY OF WILMINGTON
ENGINEERING DEPARTMENT
DATE _____ PERMIT # _____
SIGNED _____

For each open utility cut of City streets, a $325 permit shall be required from the City prior to occupancy and/or project acceptance.

1 inch

NHRMC CARDIOLOGY CENTER

LS3P ASSOCIATES LTD.
2528 INDEPENDENCE BLVD. SUITE 200
WILMINGTON, NORTH CAROLINA 28412
TEL. 910.790.9901 FAX 910.790.3111
WWW.LS3P.COM

NORTH CAROLINA REGISTERED LANDSCAPE ARCHITECT SEAL 005003 ENGINEER RICHARD A. MOORE 3/8/13

REVISIONS:

No.	Description	Date

PROJECT: 04853-0015
DATE: 27 FEBRUARY 2013
DRAWN BY: EEM
CHECKED BY: RAM

SEDIMENT & EROSION CONTROL DETAILS

CE-501

SOLUTIONS THROUGH LISTENING
SERVICE BY DESIGN
DESIGN DEVELOPMENT

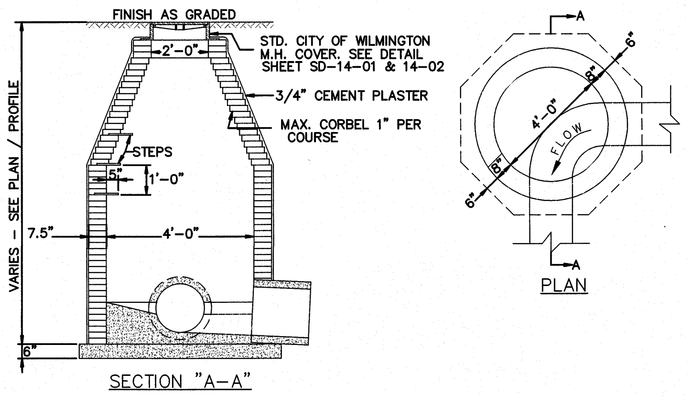

SECTION "A-A"

GUIDELINES FOR STORM DRAIN MANHOLE
SD 2 -03
NOT TO SCALE

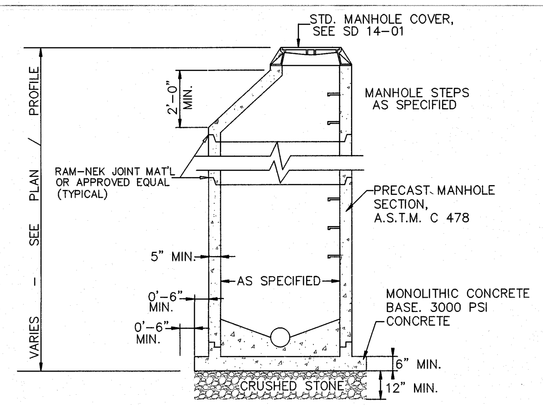

NOTE:
EXTENDED BASE MAY NOT BE REQUIRED WHERE MANHOLES ARE GREATER THAN 4 FEET INSIDE DIAMETER

PRECAST MANHOLE
SD 14-11
NOT TO SCALE

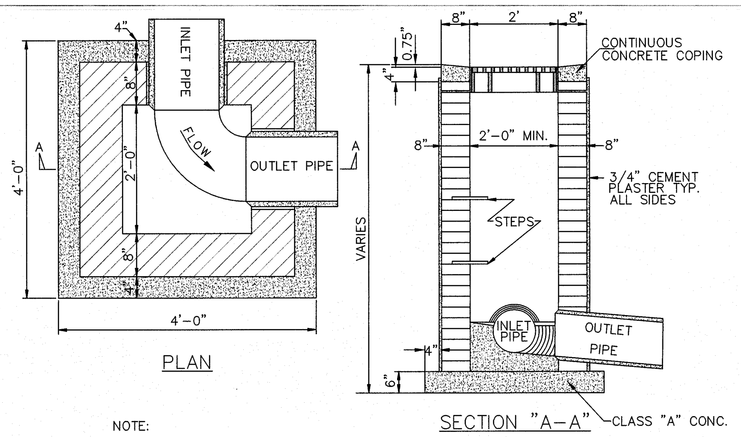

NOTE:
FRAME AND GRATE TO BE STANDARD CITY OF WILMINGTON CAST IRON FRAME AND GRATE PER SD 14-04

GRILL BASIN
SD 2-02
NOT TO SCALE

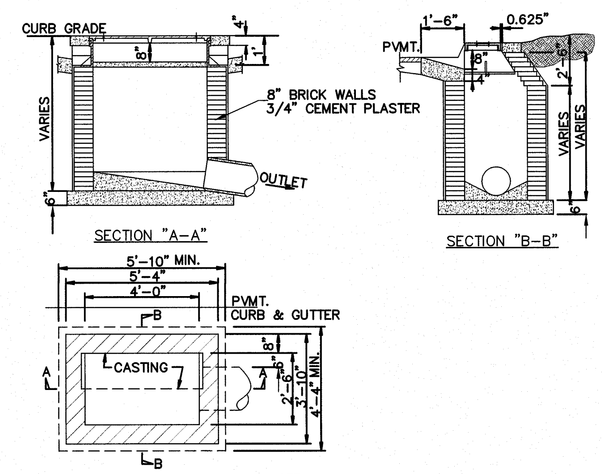

NOTE:
1. 4" DEEP X 8" WIDE CONCRETE COPING ALL AROUND BASIN CASTING.
2. ALL CONCRETE TO BE CLASS "A"
3. FOR CASTING DETAIL SEE SD 2-16

CATCH BASIN
SD 2-01
NOT TO SCALE

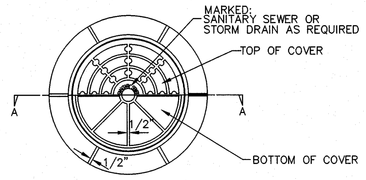

NOTE:
RING & COVER CONTACT SURFACES SHALL BE MACHINED SO AS TO INSURE EVEN BEARING OF COVER ON RING

MINIMUM WEIGHTS:
RING 190 LBS.
COVER 120 LBS.

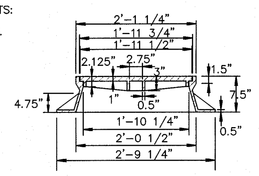

SECTION "A-A"

STANDARD MANHOLE RING AND COVER
SD 14-01
NOT TO SCALE

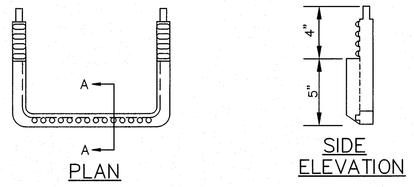

STANDARD SLIP RESISTANT MANHOLE STEP
SD 14-10
NOT TO SCALE

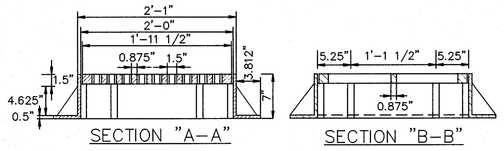

MINIMUM AVERAGE WEIGHT
FRAME 195 LBS.
GRATE 145 LBS.

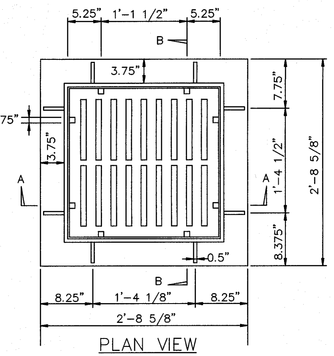

GRILL BASIN CASTINGS
SD 14-04
NOT TO SCALE

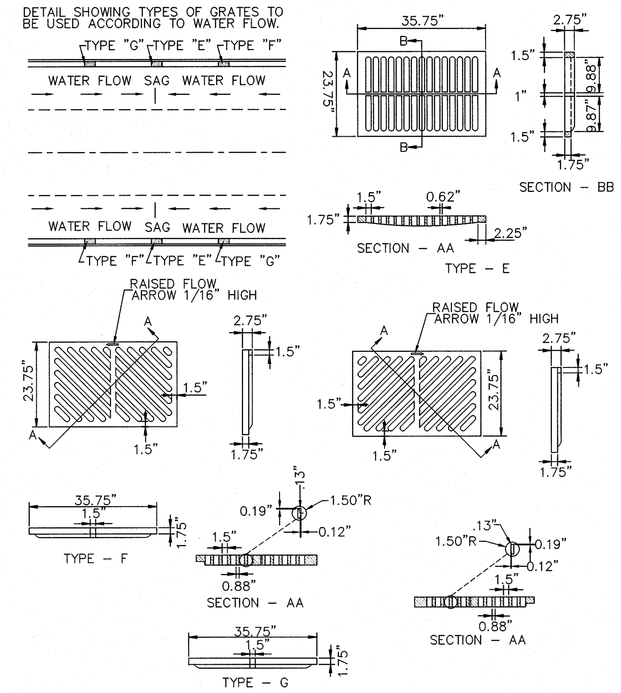

CATCH BASIN GRATE FOR PRE-CAST
SD 2-20
NOT TO SCALE

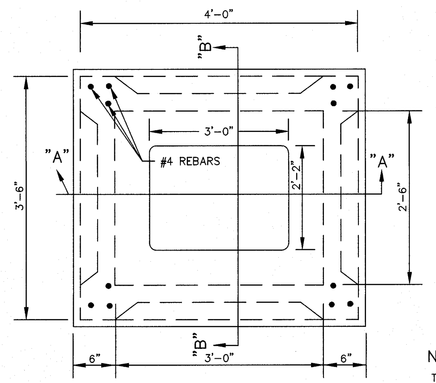

WAFFLE WALL PLAN VIEW

NOTE:
THE PATTERN OF THE KNOCK-OUT PANEL'S ARE SHOWN FOR ILLUSTRATIVE PURPOSED ONLY

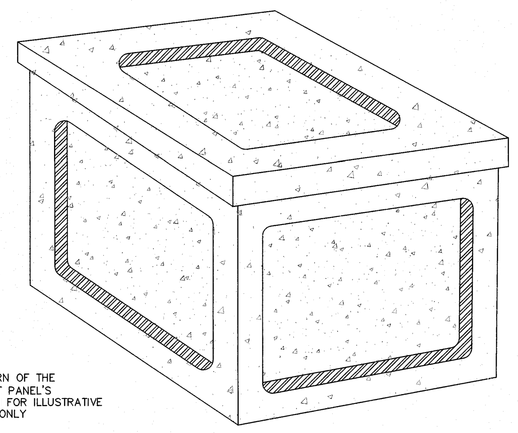

WAFFLE WALL ISOMETRIC VIEW

NOTE: SEE SD-23a FOR GENERAL NOTES.

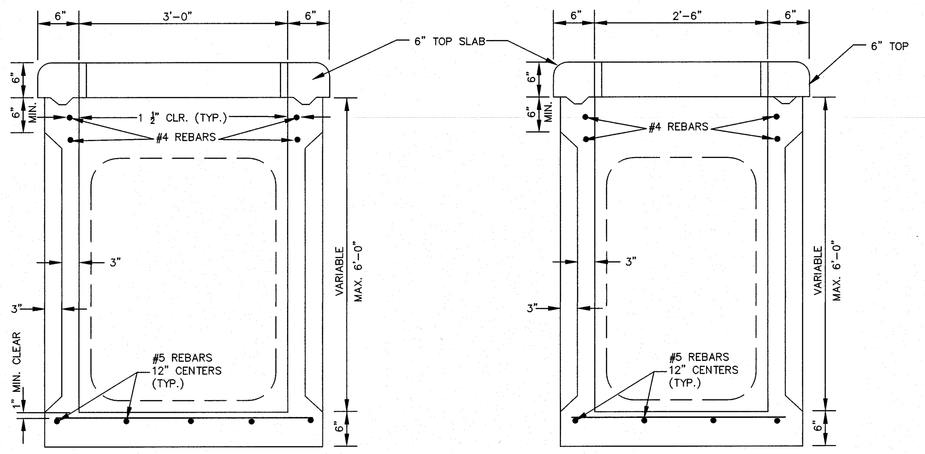

PRECAST DRAINAGE WAFFLE STRUCTURE
SD 2-23

WAFFLE STRUCTURE

GENERAL NOTES:

- USE 4000 PSI CONCRETE, PROVIDE FOR H-20 TRAFFIC LOADING.
- PROVIDE ALL REINFORCING STEEL WHICH MEETS ASTM A615 FOR GRADE 60 AND WELDED WIRE FAVRIC CONFORMING TO ASTM A185,
- LIMIT MAXIMUM DEPTH TO TOP OF BOTTOM SLAB FOR WAFFLE WALL STRUCTURE TO 6'-0".
- PLACE LIFT HOLES OR PINS IN ACCORDANCE WITH OSHA STANDARD 1926.704
- SAW CUT, CORE DRILL OR FORM OPENINGS, FOR PIPE TO PROVIDE REQUIRED SIZE AND LOCATION. ORIENT WAFFLE WALL STRUCTURES SO THAT PIPES ENTER THROUGH THE KNOCKOUT/WAFFLE PANELS ONLY. SEAL OPENINGS WITH HYDRAULIC CEMENT.
- ALL ELEMENTS PRECAST TO MEET ASTM C913.
- SET ON 6" WASHED STONE
- FRAME AND GRATE HEIGHT MAY BE ADJUSTED WITH BRICK.
- PROVIDE PRECAST STRUCTURES OVER 4'-0" IN DEPTH WITH STEPS/LADDER INSTALLED IN ACCORDANCE WITH ASHA STANDARD 1910.27 AND AS FIELD CONDITIONS DICTATE.
- WELDED WIRE FABRIC MAY BE SUBSTITUTED FOR REBAR AS LONG AS THE SAME AREA OF STEEL IS PROVIDED,
- SEAL JOINTS WITH A FLEXIBLE BUTYL RUBBER BASE CONFORMING TO FEDERAL SPECIFICATION SS-S-21A, AASHTO M-198, TYPE B - BUTYL RUBBER.
- LIMIT MAXIMUM STRUCTURE SIZE TO INSIDE CLEAR DEMENSIONS OF 2'- 6" x 3' - 0".
- USE FRAME AND GRATE AS PER SD-19.
- GROUT INVERT TO PROVIDE SMOOTH FLOW

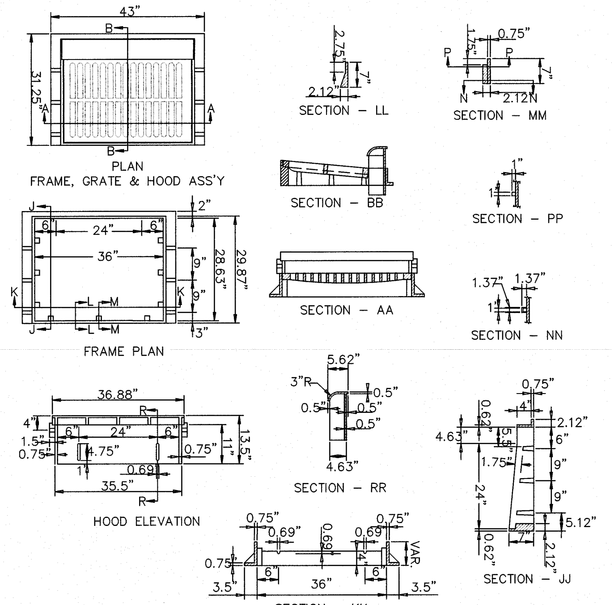

NOTE: USE TYPE "E","F",& "G" GRATE UNLESS OTHERWISE INDICATED

CATCH BASIN CASTING FOR PRE-CAST
SD 2-19
NOT TO SCALE

- EXCAVATION FOR STORM DRAINAGE PIPE SHALL BE TO THE LINES AND GRADES AS SHOWN ON THE PLANS.
- THE BEDDING SHALL BE SHAPED IN ACCORDANCE WITH CLASS "C" BEDDING AS SHOWN ON CITY STANDARD DETAIL SD 2-17.
- THE BEDDING SHALL PROVIDE A FIRM FOUNDATION OF UNIFORM DENSITY ALONG THE ENTIRE LENGTH OF PIPE. RECESSES SHALL BE MADE TO ACCOMMODATE BELLS AND JOINTS.
- WHERE UNSTABLE SOILS ARE ENCOUNTERED AS DETERMINED BY GEOTECHNICAL ENGINEER, A MINIMUM 4-INCH THICK BEDDING OF STONE SHALL BE PLACED, SEE FIGURE 2, SD 2-17.
- THE STONE SHALL BE UNIFORMLY GRADED FROM 3/4 INCH TO NO. 4 IN ACCORDANCE WITH ASTM C-33. CARE SHALL BE TAKEN TO PREVENT UNDERCUTTING IN SUITABLE SOIL.
- AREAS UNDERCUT SHALL BE FILLED WITH SUITABLE SOIL AND COMPACTED TO 95% OF MAXIMUM DENSITY AT OPTIMUM MOISTURE CONTENT AS DETERMINED BY ASTM D 1557 STANDARD TEST METHOD.

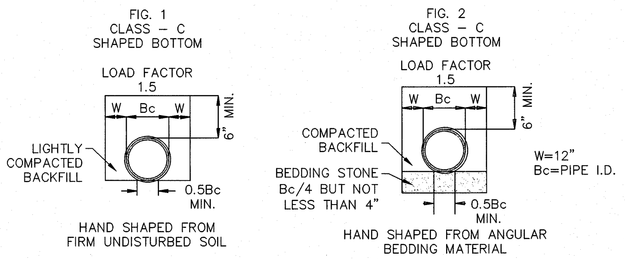

GUIDELINES FOR BEDDING DETAILS, STORM SEWER CLASS C
SD 2-17
NOT TO SCALE

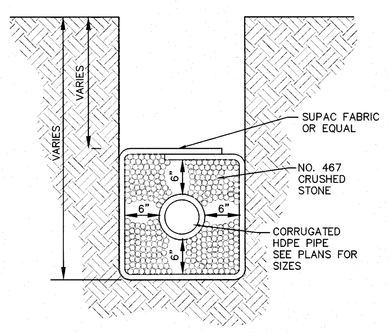

TYPICAL SECTION

GUIDELINES FOR SUB-DRAIN
SD 2-04
NOT TO SCALE

Approved Construction Plan

	Name	Date
Planning		
Traffic		
Fire		

STORMWATER MANAGEMENT PLAN
APPROVED
CITY OF WILMINGTON
ENGINEERING DEPARTMENT
DATE_____ PERMIT #_____
SIGNED_____

For each open utility cut of City streets, a $325 permit shall be required from the City prior to occupancy and/or project acceptance.

1 inch

NHRMC CARDIOLOGY CENTER

LS3P ASSOCIATES LTD.
2528 INDEPENDENCE BLVD. SUITE 200
WILMINGTON, NORTH CAROLINA 28412
TEL. 910.790.9901 FAX 910.790.3111
WWW.LS3P.COM

NORTH CAROLINA REGISTERED SEAL 025503 ENGINEER RICHARD A. MOORE 2-27-13

REVISIONS:

No.	Description	Date

PROJECT: 04853-0015
DATE: 27 FEBRUARY 2013
DRAWN BY: EEM
CHECKED BY: RAM

STORM DRAINAGE & GRADING DETAILS

CG-501

SOLUTIONS THROUGH LISTENING
SERVICE BY DESIGN
DESIGN DEVELOPMENT

© 2007 Details Provided by APPIAN Consulting Engineers www.appianengineers.com

09/10/2007 – 9:26:42 AM

GENERAL NOTES:

1. Design specifications conform to latest ASTM C1227 specifications for "Precast Concrete Water and Wastewater Structures"
2. Concrete compressive strength shall be 4,000 psi min/mum.
3. Structural design to conform to the requirements of ASTM C850 specifications for "Structural Design Loading for Water and Wastewater Structures" and shall utilize grade 60 re-bars conforming to the requirements of ASTM A615 or WWF conforming to the requirements of ASTM A185 or both.
4. Additional reinforcing at all openings.
5. Optional Cast iron casting with 24" dia. access in top section per NCDOT standards or as otherwise specified. Supplied by either Mack Industries or customer. To be field adjusted using approved methods by contractor.
6. Pipe penetration locations as per job requirements. Pipe inlet and outlet locations to have cast-in-place hooks. Pipe to be installed by contractor.
7. Joints to be sealed with 1" dia. butyl rubber joint sealant conforming to the requirements of latest AASHTO specifications M-198 and meets federal specification SS-S-0021(210-A).
8. Method of manufacture is Wet Cast.
9. Sections are monolithic. Weights:
   Top Section ____ lbs.
   Bottom Section ____ lbs.
10. 4" tee supplied & installed by others.

ELEVATION

OPTIONAL MH CASTING ACCESS

TOP SECTION

BASE SECTION

Mack Industries, Inc.	1,200 Gallon GREASE TRAP
"Quality and Service Since 1922" 4979 S. Church St. (U.S. 301) Sharpsburg, N.C. 27878 Phone: 252-977-3733 / Fax: 252-977-1344 www.mackconcrete.com	Scale: Not To Scale | Revision Date: August 2007 | Detail # GT-1200

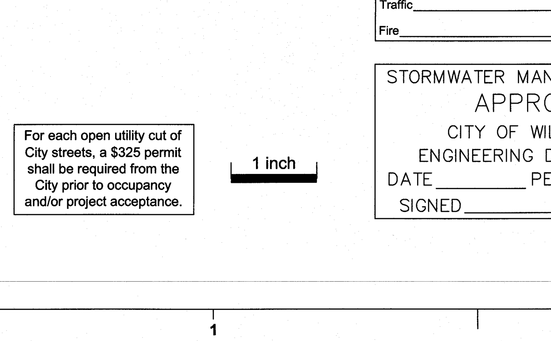

LEGEND

1. ALUMINUM BACKFLOW ENCLOSURE.
2. BACKFLOW PREVENTER.
3. ANCHOR ROD (TYPICAL).
4. POURED CONCRETE BASE – 6" MIN. THICKNESS – EXTEND 4" BEYOND OUTSIDE DIMENSIONS OF ENCLOSURE.
5. WATER SERVICE INLET PIPING.
6. WATER SERVICE OUTLET PIPING.
7. FINISH GRADE.

ALUMINUM BACKFLOW ENCLOSURE DETAIL

NOT TO SCALE

Approved Construction Plan

Name Date

Planning _____

Traffic _____

Fire _____

STORMWATER MANAGEMENT PLAN APPROVED
CITY OF WILMINGTON
ENGINEERING DEPARTMENT
DATE _____ PERMIT # _____
SIGNED _____

For each open utility cut of City streets, a $325 permit shall be required from the City prior to occupancy and/or project acceptance.

1 inch

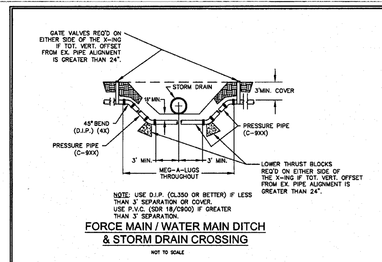

FORCE MAIN / WATER MAIN DITCH & STORM DRAIN CROSSING

NOT TO SCALE

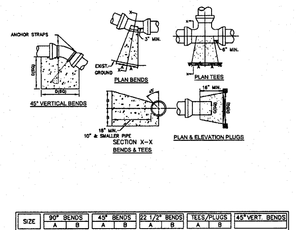

SIZE	90° BENDS A	90° BENDS B	45° BENDS A	45° BENDS B	22 1/2° BENDS A	22 1/2° BENDS B	11 1/4° BENDS A	11 1/4° BENDS B	DEADEND BENDS
4"	1'	1'	1'	1'	1'	1'	1'	1'	1'
6"	1'	1'	1'	1'	1'	1'	1'	1'	1'
8"	1'	1'	1'	1'	1'	1'	1'	1'	1'
10"	1'	1'	1'	1'	1'	1'	1'	1'	1'
12"	1'	1'	1'	1'	1'	1'	1'	1'	1'
14"	1'	1'	1'	1'	1'	1'	1'	1'	1'
16"	1'	1'	1'	1'	1'	1'	1'	1'	1'
18"	1'	1'	1'	1'	1'	1'	1'	1'	1'
20"	1'	1'	1'	1'	1'	1'	1'	1'	1'
24"	1'	1'	1'	1'	1'	1'	1'	1'	1'

NOTES: 1. BASED ON 150 PSI TEST PRESSURE AND 2000 PSF SOIL BEARING CAPACITY. ALL BEARING SURFACES TO BE CONCRETE OR UNDISTURBED SOILS.
2. USE MEGA-A-LUG (PREFERRED) IN LIEU OF BLOCKING AND RODDING.

THRUST BLOCK DETAIL

NOT TO SCALE

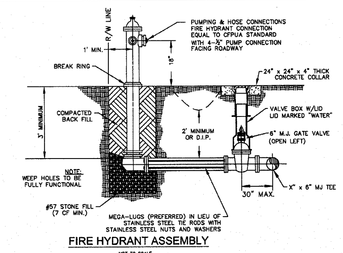

FIRE HYDRANT ASSEMBLY

NOT TO SCALE

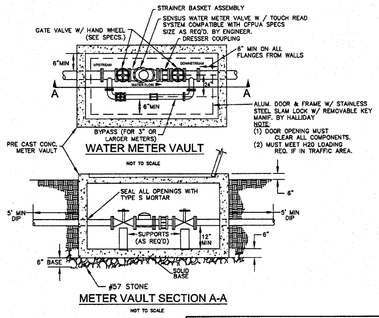

NOT TO SCALE

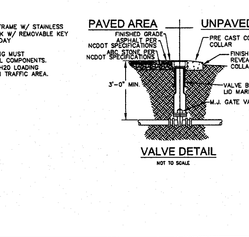

VALVE DETAIL

NOT TO SCALE

REV.	DESCRIPTION	DATE
A	OPPOA Revisions	05/14/08
B	OPPOA Revisions	08/24/09
C	OPPOA Revisions	10/26/09
D	OPPOA Revisions	12/15/09
E	OPPOA Revisions	03/05/09
F	OPPOA Revisions	01/19/10
G	OPPOA Revisions	07/27/10

Cape Fear Public Utility Authority

WATER MAIN CONSTRUCTION STANDARD DETAILS

CAPE FEAR PUBLIC UTILITY AUTHORITY WATER MAIN CONSTRUCTION SD-1

CAPE FEAR PUBLIC UTILITY AUTHORITY 235 GOVERNMENT CENTER DRIVE WILMINGTON, NC 28403 OFFICE: (910)333-6580

DATE: 05-14-08 | SCALE: N/A | DESIGNED BY: jhamblin | DRAWN BY: J. CRAIG | PROJECT NO.

SHEET NO. 1 / 2

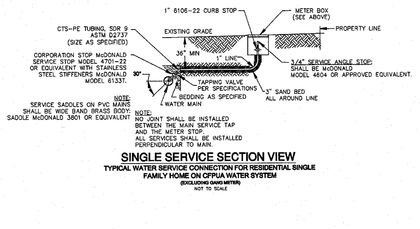

SINGLE SERVICE SECTION VIEW
TYPICAL WATER SERVICE CONNECTION FOR RESIDENTIAL SINGLE FAMILY HOME ON OPPUA WATER SYSTEM

NOT TO SCALE

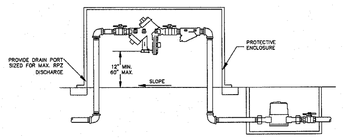

REDUCED PRESSSURE PRINCIPLE ASSEMBLY OUTDOOR HORIZONTAL INSTALLATION

NOT TO SCALE

REV.	DESCRIPTION	DATE
A	OPPOA Revisions	05/14/08
B	OPPOA Revisions	08/24/09
C	OPPOA Revisions	10/26/09
D	OPPOA Revisions	12/15/09
E	OPPOA Revisions	03/05/09
F	OPPOA Revisions	01/19/10
G	OPPOA Revisions	07/27/10

Cape Fear Public Utility Authority

WATER MAIN CONSTRUCTION STANDARD DETAILS

CAPE FEAR PUBLIC UTILITY AUTHORITY WATER MAIN CONSTRUCTION SD-1

CAPE FEAR PUBLIC UTILITY AUTHORITY 235 GOVERNMENT CENTER DRIVE WILMINGTON, NC 28403 OFFICE: (910)333-6580

DATE: 05-14-08 | SCALE: N/A | DESIGNED BY: jhamblin | DRAWN BY: J. CRAIG | PROJECT NO.

SHEET NO. 2 / 2

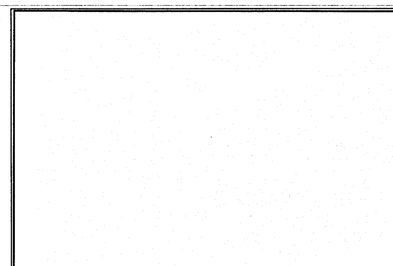

DEEP SERVICE LATERAL

(MAIN DEPTH GREATER THAN 8ft)

NOT TO SCALE

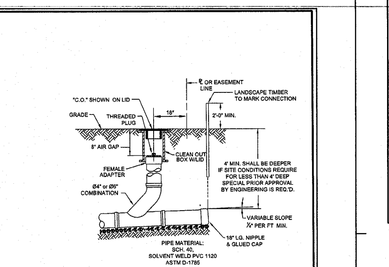

SERVICE CONNECTION & CLEAN-OUT

NOT TO SCALE

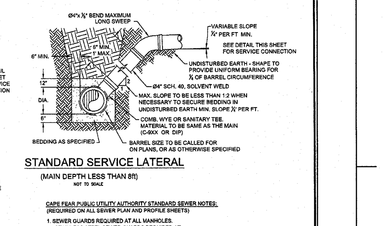

STANDARD SERVICE LATERAL

(MAIN DEPTH LESS THAN 8ft)

NOT TO SCALE

CAPE FEAR PUBLIC UTILITY AUTHORITY STANDARD SEWER NOTES (REQUIRED ON ALL SEWER PLAN AND PROFILE SHEETS)

1. SEWER GUARDS REQUIRED AT ALL MANHOLES.
2. SERVICES SHALL BE PERPENDICULAR TO MAIN AND STRAIGHT FROM MAIN TO CLEANOUT.
3. ALL SERVICES TYING INTO EXCETTER IRON MAINS SHALL BE CONSTRUCTED OF CLASS 200, DIP, WITH PROTECTO 401 CERAMIC EPOXY LINING.
4. ALL UTILITIES SHALL NOT BE LOCATED ALONG THE SAME TRENCH WITH LESS THAN 12" CLEARANCE.
5. NO FLEXIBLE COUPLINGS SHALL BE USED.

STANDARD SEWER NOTES

NOT TO SCALE

GENERAL NOTES:

1. NO EXCAVATED MATERIAL SHALL BE PLACED IN ANY STREAM, DITCH OR DRAINAGE WAY.
2. THE CONTRACTOR IS RESPONSIBLE FOR LOCATING ALL UNDERGROUND UTILITIES BEFORE ANY CONSTRUCTION BEGINS.
3. THE CONTRACTOR IS RESPONSIBLE FOR TEMPORARY SEDIMENT AND EROSION CONTROL MEASURES WHILE CONSTRUCTION IS IN PROGRESS.
4. THE CONTRACTOR IS RESPONSIBLE FOR STABILIZATION OF ALL DISTURBED AREAS.
5. THE CONTRACTOR IS RESPONSIBLE FOR DEWATERING OF ALL LATERALS.
6. (TO ARRANGE AND INSURE COMPLIANCE WITH ALL LOCAL AND STATE REGULATIONS)

REV.	DESCRIPTION	DATE
A	Revised for OPPOA Comments	05/14/08
B	Revised per Service Connection and Universal Detail correction	10/26/09
C	Revised per Detail Corrections	12/2/09
D	Revised per Detail Corrections	3/05/09
E	Added Sampling Chamber Detail	3/19/09
F	Revised SSP Pressure Class	7/15/09

Cape Fear Public Utility Authority

SANITARY SEWER STANDARD DETAILS

CAPE FEAR PUBLIC UTILITY AUTHORITY STORM & SANITARY SEWER STANDARD DETAILS SD-3

CAPE FEAR PUBLIC UTILITY AUTHORITY 235 GOVERNMENT CENTER DRIVE WILMINGTON, NC 28403 OFFICE: (910)333-6580

DATE: 05-14-08 | SCALE: N/A | DESIGNED BY: jhamblin | DRAWN BY: J. CRAIG | PROJECT NO.

SHEET NO. 1 / 3

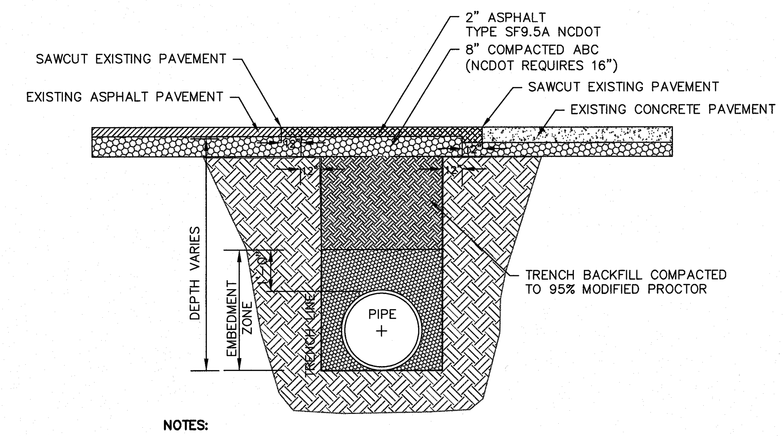

NOTES:

- BACKFILL TO BE INSTALLED IN 6" LIFTS (MAXIMUM) AND COMPACTED TO A MINIMUM DENSITY OF 95% AS DETERMINED BY THE MODIFIED A.A.S.H.T.O. STANDARD METHOD T-99
- CUT – BACK TO BE PREPARED AFTER TRENCH BACKFILLING AND COMPACTION

STANDARD SHOWING METHOD MAKING PAVEMENT REPAIRS WHERE PIPE IS INSTALLED

PAVEMENT REPAIR DETAIL

SD 1–16

NOT TO SCALE

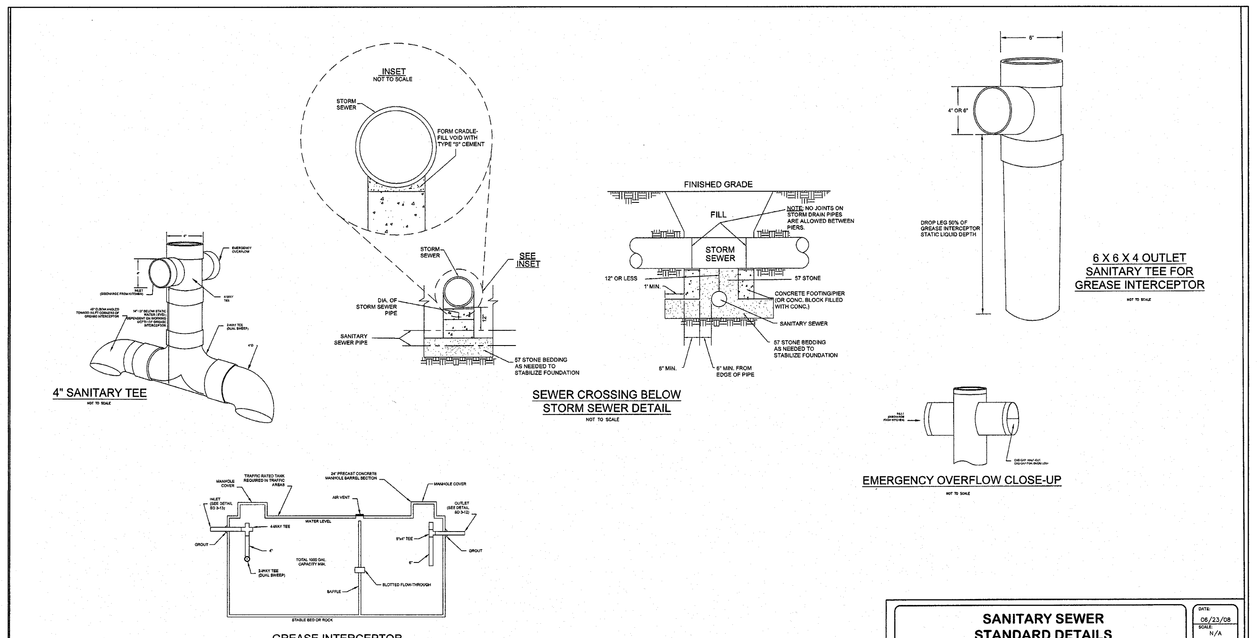

NOT TO SCALE

REV.	DESCRIPTION	DATE
A	OPPOA Revisions	08/24/09
B	OPPOA Revisions	11/19/09

Cape Fear Public Utility Authority

SANITARY SEWER STANDARD DETAILS

CAPE FEAR PUBLIC UTILITY AUTHORITY STORM & SANITARY SEWER STANDARD DETAILS SD-3

CAPE FEAR PUBLIC UTILITY AUTHORITY 235 GOVERNMENT CENTER DRIVE WILMINGTON, NC 28403 OFFICE: (910)333-6580

DATE: 05-13-08 | SCALE: N/A | DESIGNED BY: jhamblin | DRAWN BY: J. CRAIG | PROJECT NO.

SHEET NO. 2 / 3

REV.	DESCRIPTION	DATE
A	OPPOA Revisions	08/24/09
B	OPPOA Revisions	11/19/09

Cape Fear Public Utility Authority

SANITARY SEWER STANDARD DETAILS

CAPE FEAR PUBLIC UTILITY AUTHORITY STORM & SANITARY SEWER STANDARD DETAILS SD-3

CAPE FEAR PUBLIC UTILITY AUTHORITY 235 GOVERNMENT CENTER DRIVE WILMINGTON, NC 28403 OFFICE: (910)333-6580

DATE: 05-13-08 | SCALE: N/A | DESIGNED BY: jhamblin | DRAWN BY: J. CRAIG | PROJECT NO.

SHEET NO. 3 / 3

NHRMC CARDIOLOGY CENTER

LS3P ASSOCIATES LTD.
2528 INDEPENDENCE BLVD. SUITE 200
WILMINGTON, NORTH CAROLINA 28412
TEL. 910.790.9901 FAX 910.790.3111
WWW.LS3P.COM

NORTH CAROLINA PROFESSIONAL ENGINEER SEAL 025503 RICHARD A. MOORE ENGINEER 2/27/13

REVISIONS:

No.	Description	Date

PROJECT: 04853-0015
DATE: 27 FEBRUARY 2013
DRAWN BY: EEM
CHECKED BY: RAM

UTILITY DETAILS

CU-501

SOLUTIONS THROUGH LISTENING

SERVICE BY DESIGN

DESIGN DEVELOPMENT

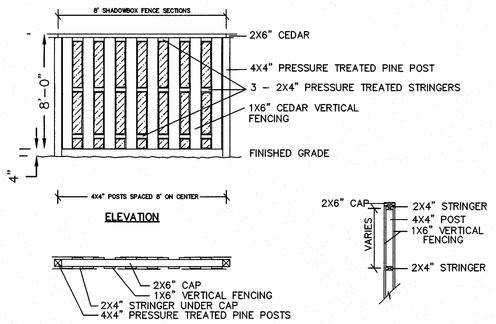

SHADOWBOX FENCE DETAIL

NOT TO SCALE

NOTE: FOUNDATIONS FOR THE FENCE POSTS SHALL BE DESIGNED BY THE FENCE CONTRACTOR

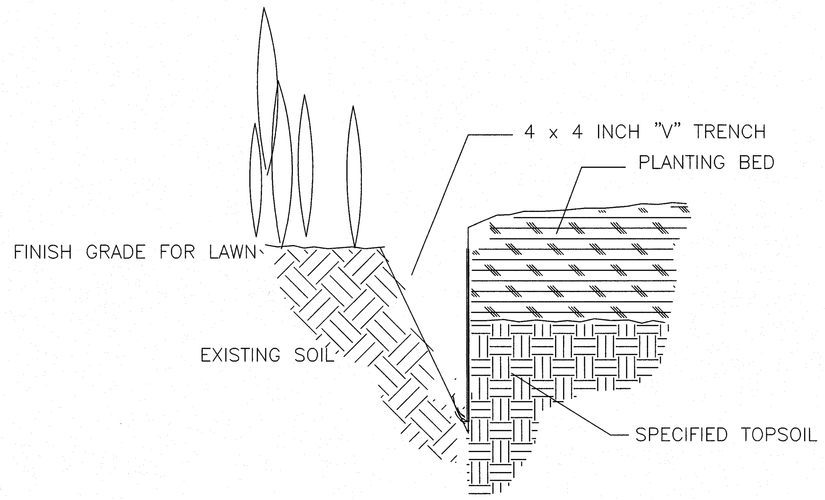

BED EDGING DETAIL

NO SCALE

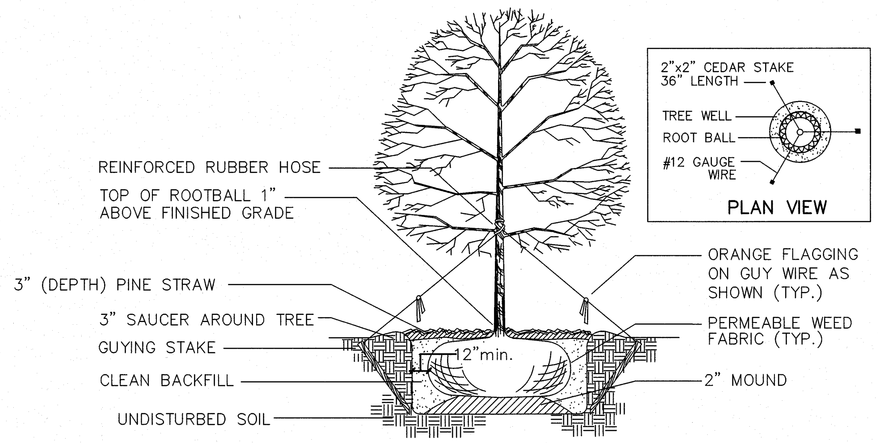

TREE PLANTING DETAIL

NO SCALE

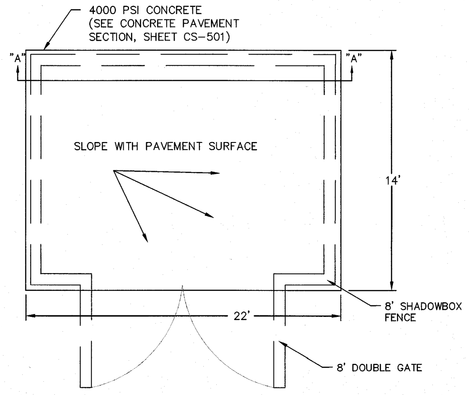

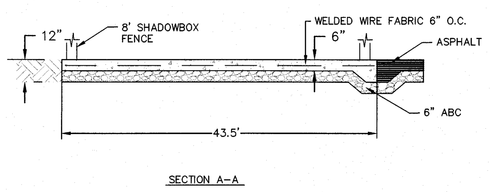

SECTION A-A

DUMPSTER PAD

NOT TO SCALE

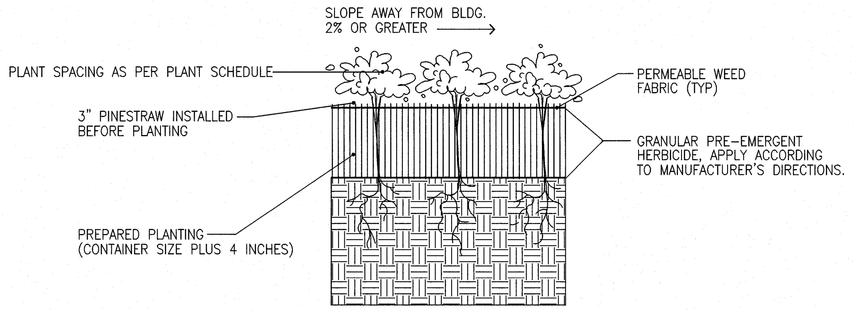

GROUNDCOVER/PERENNIAL PLANTING DETAIL

NO SCALE

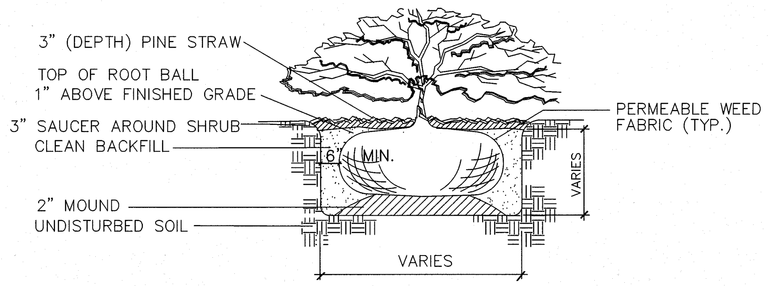

SHRUB PLANTING DETAIL

NO SCALE

For each open utility cut of City streets, a $325 permit shall be required from the City prior to occupancy and/or project acceptance.

1 inch

Approved Construction Plan

	Name	Date
Planning		
Traffic		
Fire		

STORMWATER MANAGEMENT PLAN
APPROVED
CITY OF WILMINGTON
ENGINEERING DEPARTMENT
DATE _____ PERMIT # _____
SIGNED _____

NHRMC CARDIOLOGY CENTER

LS3P ASSOCIATES LTD.
2528 INDEPENDENCE BLVD. SUITE 200
WILMINGTON, NORTH CAROLINA 28412
TEL. 910.790.9901 FAX 910.790.3111
WWW.LS3P.COM

NORTH CAROLINA REGISTERED LANDSCAPE ARCHITECT No. 558 MARGARET A. GRAY
02/27/13

REVISIONS:

No.	Description	Date

PROJECT: 04853-0015
DATE: 27 FEBRUARY 2013
DRAWN BY: EEM
CHECKED BY: RAM

LANDSCAPE DETAILS

CL-501

SOLUTIONS THROUGH LISTENING
SERVICE BY DESIGN
DESIGN DEVELOPMENT