TRC SUBMITTAL

NHRMC OUTPATIENT CARDIOLOGY CENTER

FOR

LS3P ASSOCIATES, LTD.

CITY OF WILMINGTON, NORTH CAROLINA

JUNE 13, 2013 - TRC COMMENTS

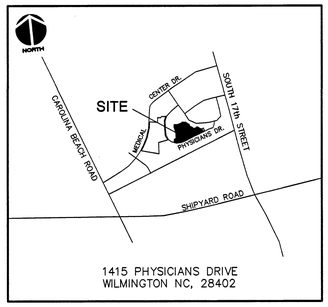

1415 PHYSICIANS DRIVE
WILMINGTON NC, 28402

VICINITY MAP
NOT TO SCALE

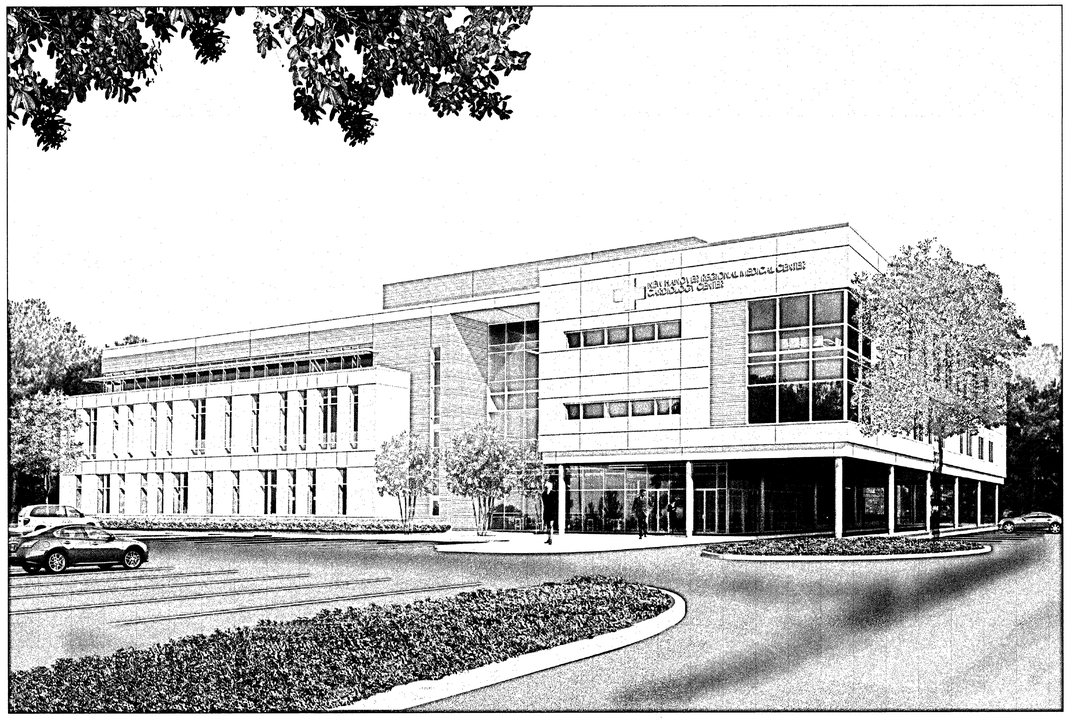

SHEET INDEX

FILE #	DESCRIPTION
G-001	COVER
CR-001	GENERAL NOTES
CX-101	EXISTING CONDITIONS-SITE INVENTORY MAP
CD-101	DEMOLITION PLAN
CS-101	SITE PLAN
CE-101	PHASE 1 SEDIMENT & EROSION CONTROL PLAN
CE-102	PHASE 2 SEDIMENT & EROSION CONTROL PLAN
CG-101	GRADING AND STORM DRAINAGE PLAN
CU-101	UTILITY PLAN
CL-101	LANDSCAPE PLAN
CS-501	SITE DETAILS
CE-501	SEDIMENT & EROSION CONTROL DETAILS
CG-501	STORM DRAINAGE & GRADING DETAILS
CU-501	UTILITY DETAILS
CU-502	UTILITY DETAILS
CU-503	UTILITY DETAILS
CU-504	UTILITY DETAILS
CU-505	UTILITY DETAILS
CU-506	UTILITY DETAILS
CL-501	LANDSCAPE DETAILS

REVISIONS:

No.	Description	Date
0	DESIGN DEVELOPMENT	02/27/2013
1	TRC COMMENT REVISIONS	04/17/2013
2	TRC COMMENT REVISIONS	06/13/2013

PROPERTY OWNER

(FINANCIALLY RESPONSIBLE PARTY):

NEW HANOVER REGIONAL MEDICAL CENTER
ATTN: CHRISTINA MAROULIS-OLLIE
2131 S. 17TH ST.
PO BOX 9000
WILMINGTON, NC 28401
(P) 910-343-7000

ARCHITECT:

LS3P ASSOCIATES, LTD.
2528 INDEPENDENCE BLVD., SUITE 200
WILMINGTON, NORTH CAROLINA 28412
(P) 910-790-9901
(F) 910-790-3111

CIVIL ENGINEER / LANDSCAPE ARCHITECT:

McKIM & CREED, INC
243 NORTH FRONT STREET
WILMINGTON, NORTH CAROLINA 28401
(P) 910-343-1048
(F) 910-251-8282

NORTH CAROLINA PROFESSIONAL ENGINEER SEAL 025503 RICHARD A. MOORE 6/13/13

CALL NC ONE CALL BEFORE YOU DIG
STOP
1-800-632-4949
AVOID UTILITY DAMAGE

PHONE# 1(800)632-4949

McKIM & CREED
243 NORTH FRONT STREET
WILMINGTON, NORTH CAROLINA 28401
PHONE: (910)343-1048, FAX: (910)251-8282
NC LICENSE# F-1222

www.mckimcreed.com

LS3P ASSOCIATES LTD.
2528 INDEPENDENCE BLVD. SUITE 200
WILMINGTON, NORTH CAROLINA 28412
TEL. 910.790.9901 FAX 910.790.3111
WWW.LS3P.COM

Approved Construction Plan

	Name	Date
Planning		
Traffic		
Fire		

1 inch

STORMWATER MANAGEMENT PLAN
APPROVED
CITY OF WILMINGTON
ENGINEERING DEPARTMENT
DATE _____ PERMIT # _____
SIGNED _____

For each open utility cut of City streets, a $325 permit shall be required from the City prior to occupancy and/or project acceptance.

DEMOLITION NOTES:

1. THE CONTRACTOR IS RESPONSIBLE FOR FIELD VERIFYING AND FIELD DETERMINING THE EXACT DEMOLITION LIMITS. QUESTIONS DURING BIDDING SHALL BE DIRECTED TO THE ARCHITECT.
2. THE CONTRACTOR SHALL VISIT THE SITE TO BECOME FAMILIARIZED WITH FIELD DEMOLITION CONDITIONS.
3. THE CONTRACTOR IS RESPONSIBLE FOR THE PROPER DISPOSAL OF ALL DEMOLISHED DEBRIS ASSOCIATED WITH THE PROJECT.
4. THE CONTRACTOR IS RESPONSIBLE FOR CONTROLLING DUST GENERATED BY THE WORK, INCLUDING BUT NOT LIMITED TO DEMOLITION AND CONSTRUCTION ACTIVITIES, SITE VEHICULAR TRAFFIC AND RELATED OPERATIONS.
5. THE CONTRACTOR IS RESPONSIBLE FOR HAVING ALL EXISTING UTILITIES LOCATED PRIOR TO BEGINNING ANY DEMOLITION. CONTRACTOR SHALL NOTIFY NC ONE CALL PRIOR TO BEGINNING CONSTRUCTION OR EXCAVATION TO HAVE EXISTING UTILITIES LOCATED.
6. EXISTING UTILITIES AND STRUCTURES SHOWN ARE BASED ON FIELD SURVEY. THE CONTRACTOR SHALL VERIFY FIELD CONDITIONS PRIOR TO BEGINNING RELATED CONSTRUCTION. ANY DISCREPANCIES SHALL BE REPORTED TO THE ARCHITECT AND ENGINEER IMMEDIATELY.
7. THE CONTRACTOR IS RESPONSIBLE FOR THE COORDINATION OF DISCONNECTING AND ABANDONING ALL EXISTING UTILITIES UNLESS OTHERWISE NOTED. ALL EXISTING UTILITIES AND ASSOCIATED PIPING, ETC. NOT IN USE ON THE SITE SHALL BE PROPERLY ABANDONED AND REMOVED.
8. THE CONTRACTOR IS RESPONSIBLE FOR THE PROTECTION OF ANY EXISTING UTILITIES THAT REMAIN IN SERVICE DURING DEMOLITION.
9. THE CONTRACTOR IS RESPONSIBLE FOR COORDINATING THE REMOVAL OR RELOCATION OF ANY EXISTING UTILITY POLES/GUY LINES, LIGHT POLES, TELEPHONE PEDESTALS. THE GENERAL CONTRACTOR IS RESPONSIBLE FOR CONTACTING THE APPLICABLE UTILITY COMPANY AS REQUIRED.
10. THE CONTRACTOR IS RESPONSIBLE FOR STABILIZATION OF ALL DISTURBED AREAS AND SLOPES ON AND OFF SITE IN ACCORDANCE WITH THE EROSION CONTROL MEASURES SPECIFIED ON THE PLANS AND IN THE SPECIFICATIONS. THE CONTRACTOR SHALL COORDINATE WITH THE OWNER TO DETERMINE WHO IS RESPONSIBLE FOR PROVIDING THE PERMANENT STABILIZATION MEASURES AND THE TYPE OF PERMANENT MEASURES PRIOR TO BEGINNING DEMOLITION AND CONSTRUCTION. THE PERMANENT STABILIZATION MEASURES SHALL BE IN PLACE AND ACCEPTABLE TO THE OWNERS REPRESENTATIVE AND ENGINEER PRIOR TO PROJECT CLOSEOUT. COORDINATE INSPECTION WITH THE OWNER AND ENGINEER PRIOR TO PROJECT CLOSEOUT.
11. THE CONTRACTOR IS RESPONSIBLE FOR COORDINATING AND CONTACTING THE ENGINEER FOR THE REQUIRED INSPECTIONS ON THE PROJECT.
12. WETLANDS DO NOT EXIST ON SITE.
13. CITY OF WILMINGTON TEMPORARY METER REMOVAL POLICY MUST BE ADHERED TO IF CONSTRUCTION OR CONSTRUCTION LAYDOWN AREA REQUIRES THE USE OF PUBLIC SPACES CONTAINING PARKING METERS.
14. THE SITE DEMOLITION CONTRACTOR SHALL REMOVE AND DELIVER TO THE OWNER, IN WORKING CONDITION, ALL ITEMS AS INDICATED ON THE DRAWINGS. THE SITE DEMOLITION CONTRACTOR SHALL TEST THE EXISTING LIGHTING SYSTEM PRIOR TO PERFORMING ANY WORK ON THE SYSTEM AND IDENTIFY ALL DEFECTIVE COMPONENTS AND DAMAGE IN WRITING TO THE ARCHITECT/ENGINEER. IF NONE ARE IDENTIFIED, THE EXISTING SALVAGED FIXTURES AND POLES WILL BE CONSIDERED DAMAGE FREE AND OPERATIONAL AND ANY DAMAGE NOTED AFTER REMOVAL WILL BE CONSIDERED A RESULT OF CONTRACTOR OPERATIONS AND WILL BE REPAIRED OR REPLACED BY THE CONTRACTOR. THE SITE DEMOLITION CONTRACTOR SHALL REMOVE ALL EXISTING UNDERGROUND RACEWAYS AND CONDUCTORS FEEDING THE EXISTING SITE LIGHTING FIXTURES. THE EXISTING ELECTRICAL FEEDER FOR THE SITE LIGHTING WILL BE DE-ENERGIZED BY THE ELECTRICAL CONTRACTOR PRIOR TO DEMOLITION.
15. THE CONTRACTOR IS REQUIRED TO CAPTURE ALL REFRIGERANT ON ALL EQUIPMENT PLANNED FOR DEMOLITION CONTAINING REFRIGERANT.
16. CITY OF WILMINGTON TRAFFIC CONTROL SIGNS LOCATED IN THE RIGHT-OF-WAY SHALL BE MAINTAINED TO THE MAXIMUM EXTENT PRACTIBLE OR REPLACED AT THE END OF CONSTRUCTION AT LOCATION IDENTIFIED BY CITY OF WILMINGTON TRAFFIC ENGINEERING OR SHOWN ON THE SITE PLAN.

TREE PROTECTION NOTES:

1. PRIOR TO ANY CLEARING, GRADING, OR CONSTRUCTION ACTIVITY, TREE PROTECTION FENCING WILL BE INSTALLED AROUND PROTECTED TREES OR GROVES OF TREES. NO CONSTRUCTION WORKERS, TOOLS, MATERIALS OR VEHICLES ARE PERMITTED WITHIN THE TREE PROTECTION FENCING.
2. NO LAND DISTURBANCE INCLUDING TREE REMOVAL IS TO OCCUR OUTSIDE THE LIMITS OF DISTURBANCE SHOWN ON THE PLANS. [18-457(B)]
3. PROTECTIVE FENCING IS TO BE PROPERLY MAINTAINED THROUGHOUT THE DURATION OF THE PROJECT. [18-458]
4. LAND CLEARING AND CONSTRUCTION CONTRACTORS SHALL RECEIVE ADEQUATE INSTRUCTION ON TREE PROTECTION REQUIREMENTS AND METHODS. [18-457(D)]
5. NO EQUIPMENT IS ALLOWED ON THE SITE UNTIL ALL TREE PROTECTION FENCING AND SILT FENCING HAS BEEN INSTALLED AND APPROVED. [18-458]
6. ANY TREES AND/OR AREAS DESIGNATED TO BE PROTECTED MUST BE PROPERLY BARRICADED WITH FENCING AND PROTECTED THROUGHOUT CONSTRUCTION TO INSURE THAT NO CLEARING AND GRADING OR STAGING OF MATERIALS WILL OCCUR IN THOSE AREAS. [18-458]
7. REGULATED AND SIGNIFICANT TREES IN THE STREET YARD [18-456(D)] AND ANY TREES IN ANY REQUIRED BUFFERS [18-456(B)] ARE REQUIRED TO BE RETAINED.

CONSTRUCTION NOTES:

1. PROTECTION OF EXISTING VEGETATION: AT THE START OF GRADING INVOLVING THE LOWERING OR RAISING OF EXISTING GRADE AROUND A TREE OR STRIPPING OF TOPSOIL, A CLEAN, SHARP, VERTICAL CUT SHALL BE MADE AT THE EDGE OF THE TREE SAVE AREA AT THE SAME TIME AS OTHER EROSION CONTROL MEASURES ARE INSTALLED. THE TREE PROTECTION FENCING SHALL BE INSTALLED ON THE SIDE OF THE CUT FARTHEST AWAY FROM THE TREE TRUNK AND SHALL REMAIN IN PLACE UNTIL ALL CONSTRUCTION IN THE VICINITY OF THE TREES IS COMPLETE. NO STORAGE OF MATERIALS, FILL OR EQUIPMENT AND NO TRESPASSING SHALL BE ALLOWED WITHIN THE BOUNDARY OF THE PROTECTED AREA.
2. HANDICAP PARKING SIGNS WILL CONFORM TO N.C.S.B.C. DETAILS R7-8 AND R7-8D.
3. ALL SIGNAGE AND PAVEMENT MARKINGS IN AREAS OPEN TO PUBLIC TRAFFIC SHALL MEET MUTCD (MANUAL ON UNIFORM TRAFFIC CONTROL DEVICES) STANDARDS.
4. THE CONTRACTOR IS RESPONSIBLE FOR PROVIDING A TRAFFIC CONTROL PLAN AND DEVICES DURING CONSTRUCTION WORK IN ACCORDANCE WITH THE MUTCD, OWNER AND CITY OF WILMINGTON STANDARDS.
5. ALL DIMENSIONS ARE MEASURED TO THE BACK OF CURB UNLESS OTHERWISE INDICATED.
6. THE CONTRACTOR IS RESPONSIBLE FOR INSTALLING THE PARKING SIGNS, TRAFFIC SIGNS AND PAVEMENT MARKINGS. THE CONTRACTOR SHALL COORDINATE THIS WORK WITH THE OWNER REPRESENTATIVE PRIOR TO BIDDING AND CONSTRUCTION AS REQUIRED.
7. CONSTRUCTION FENCING WILL BE INSTALLED AND MAINTAINED FOR DURATION OF PROJECT.
8. ALL SIGNAGE MUST BE OBTAINED AS A SEPARATE PERMIT THROUGH
9. NO OBSTRUCTIONS SHALL BE PERMITTED IN THE SPACE BETWEEN 30 INCHES AND TEN FEET ABOVE GROUND LEVEL WITHIN THE AREA OF THE TRIANGULAR SIGHT DISTANCE.
10. ALL PROPOSED VEGETATION WITHIN SITE TRIANGLES SHALL NOT INTERFERE WITH CLEAR VISUAL SITE LINES FROM 30 INCHES AND TEN FEET.
11. CONTACT THE NORTH CAROLINA ONE CALL CENTER PRIOR TO DOING ANY DIGGING. 1-800-632-4949
12. THE BELL SOUTH CONTACT IS STEVE DAYVAULT. HE IS THE BUILDING INDUSTRY CONSULTANT (910) 392-8712. PLEASE CONTACT HIM PRIOR TO STARTING THE PROJECT IN ORDER TO FACILITATE GOOD COMMUNICATION AND MAXIMUM FLEXIBILITY.
13. THE PROCESS FOR TELEPHONE CABLE PLACEMENT;
    *FINAL GRADE WILL NEED TO BE ESTABLISHED.
    *POWER WILL PLACE THEIR CABLE FIRST – ABOUT 3' DEEP
    *BELLSOUTH/CABLE TV WILL THEN PLACE CABLE – ABOUT 2' DEEP

EXISTING CONDITIONS GENERAL NOTES

1. SITE CONDITIONS ARE BASED ON SIGNED & SEALED SURVEY PROVIDED BY STEWART ENGINEERING ON FEBRUARY 25th, 2013.
2. THE SITE IS ZONED O&I-1.
3. SOIL TYPES PER THE USDA NRCS SOIL SURVEY ARE DELINEATED ON THE SITE INVENTORY PLAN.
4. THIS TRACT IS NOT LOCATED IN A DESIGNATED 100-YEAR FLOOD ZONE.
5. THIS TRACT IS NOT LOCATED IN A CAMA AREA OF CONCERN. THERE ARE NO CAMA JURISDICTIONAL WATERS LOCATED ON OR NEAR THE SITE.
6. THE CAMA LAND USE CLASSIFICATION IS "URBAN" AS DETERMINED BY THE WILMINGTON-NEW HANOVER COUNTY CAMA LAND USE PLAN 2006.
7. BASED ON AVAILABLE DATA, WETLANDS, CLASS IV SOILS AND 100-YEAR FLOOD PLAIN ARE NOT PRESENT ON THE SITE. DUE TO THIS THERE ARE NO KNOWN CONSERVATION RESOURCES ON THE SITE.
8. BASED ON AVAILABLE DATA THERE ARE NO KNOWN CEMETERIES, BURIAL SITES OR BURIAL GROUNDS LOCATED ON THE PROJECT SITE.
9. THE SITE IS NOT RECOGNIZED AS A LOCAL, STATE OR FEDERALLY HISTORIC OR ARCHAEOLOGICAL SITE PER THE STATE HISTORIC PRESERVATION OFFICE.
10. REVIEW OF HYDRIC SOILS AND AERIAL IMAGERY INDICATE THAT THERE ARE NO USACE SECTION 404 WETLANDS OR SECTION 10 NAVIGABLE WATERS.
11. BASED ON AVAILABLE DATA NO KNOWN FORESTED RESOURCES ARE AVAILABLE ON THE SITE. IT IS NOT ANTICIPATED THAT PROTECTED SPECIES ARE PRESENT ON THE SITE.
12. UTILITIES LOCATIONS ARE BASED UPON THE LOCATIONS OF EXISTING STRUCTURES, PAINT MARKINGS, AND OTHER VISIBLE EVIDENCE. UTILITIES OTHER THAN THOSE SHOWN HEREON MAY EXIST. IT IS THE RESPONSIBILITY OF THE CONTRACTOR TO VERIFY THE LOCATIONS OF ALL UTILITIES BEFORE CONSTRUCTION OR EXCAVATION.
13. A RECOMBINATION PLAT WAS COMPLETED BY HANOVER DESIGN SERVICES, PA ON JANUARY 23RD, 2013. TOTAL AREA OF THE SITE IS 8.24 ACRES.

PARKING FACILITY DESIGN NOTES (SD 15-13)

1. STREET SIGN AND PAVEMENT MARKING APPROVALS ARE REQUIRED FROM TRAFFIC ENGINEERING AT 341-7888.
2. TRAFFIC ENGINEERING MUST APPROVE PAVEMENT MARKING LAYOUT PRIOR TO ACTUAL STRIPING.
3. A UTILITY CUT PERMIT IS REQUIRED FOR EACH OPEN CUT OF A CITY STREET. NOTE THIS ON THE PLAN AND CONTACT 910-341-5888 FOR MORE DETAILS. IN CERTAIN CASES, AN ENTIRE RESURFACING OF THE AREA BEING OPEN CUT MAY BE REQUIRED.
4. WHEEL STOPS SHALL NOT EXCEED 4-INCH IN HEIGHT AND SHALL BE PLACED 2.5-FEET FROM THE END OF STALL.
5. TACTILE WARNING MATS ARE TO BE INSTALLED ON ALL WHEELCHAIR RAMPS.
6. ALL TRAFFIC CONTROL SIGNS AND MARKINGS OFF THE RIGHT-OF-WAY ARE TO BE MAINTAINED BY THE PROPERTY OWNER IN ACCORDANCE WITH CITY AND/OR MUTCD STANDARDS.
7. ALL PARKING STALL MARKINGS AND LANE ARROWS SHALL BE WHITE.
8. ALL PAVEMENT MARKINGS REGULATING TRAFFIC FLOW MUST BE THERMOPLASTIC.
9. ALL OTHER PAVEMENT MARKINGS, SIGNS OR OTHER TRAFFIC CONTROL DEVICES SHALL CONFORM TO THE LATEST EDITION AND/OR INTERPRETATION OF THE MANUAL ON UNIFORM TRAFFIC CONTROL DEVICES (MUTCD).
10. NO OBSTRUCTIONS WILL BE ALLOWED ADJACENT TO A PARKING STALL WHICH WOULD PREVENT SAFE INGRESS AND EGRESS FROM A PARKED VEHICLE.
11. PARKING IN FIRE LANES AND IN NON-RESIDENTIAL DRIVEWAYS SHALL BE PREVENTED BY STANDARD SIGNS AND AS NEEDED BY PORTABLE BARRICADES.

CITY OF WILMINGTON STANDARD NOTES:

1. CONTACT THE NORTH CAROLINA ONE CALL CENTER PRIOR TO DOING ANY DIGGING AT 1-800-632-4949.
2. PRIOR TO ANY CLEARING, GRADING OR CONSTRUCTION ACTIVITY, TREE PROTECTION FENCING WILL BE INSTALLED AROUND PROTECTED TREES OR GROVES OF TREES AND NO CONSTRUCTION WORKERS, TOOLS, MATERIALS, OR VEHICLES ARE PERMITTED WITHIN THE TREE PROTECTION FENCING.
3. ALL PAVEMENT MARKINGS IN PUBLIC RIGHTS-OF-WAY AND FOR DRIVEWAYS ARE TO BE THERMOPLASTIC AND MEET CITY AND/OR NCDOT STANDARDS.
4. ALL TRAFFIC CONTROL SIGNS AND PAVEMENT MARKINGS IN AREAS OPEN TO PUBLIC TRAFFIC ARE TO MEET MUTCS (MANUAL OR UNIFORM TRAFFIC CONTROL DEVICES) STANDARDS.
5. ANY BROKEN OR MISSING SIDEWALK PANELS, DRIVEWAY APRON PANELS, AND CURB & GUTTER SECTIONS SHALL BE REPLACED.
6. EXISTING WHEELCHAIR RAMPS WILL BE BROUGHT UP TO CURRENT ADA STANDARDS, WHERE APPLICABLE.
7. THE TWO DUMPSTER LOCATIONS WILL REQUIRE A LIVING AND NON-LIVING SCREEN.
8. CONTACT TRAFFIC ENGINEERING AT 341-7888 TO DISCUSS STREET LIGHTING OPTIONS.
9. IF THE CONTRACTOR DESIRES WATER FOR CONSTRUCTION HE SHALL APPLY WITH THE CFPUA IN ADVANCE FOR THIS SERVICE AND MUST PROVIDE A REDUCED PRESSURE ZONE (RPZ) BACKFLOW PREVENTION DEVICE ON THE DEVELOPER'S SIDE OF THE WATER METER BOX.
10. THE NUMBER AND SPACING OF DRIVEWAYS FOR ALL INTERCONNECTED SITES WILL BE DETERMINED BY THE COMBINED FRONTAGE OF THE INTERCONNECTED PROPERTIES.
11. A LANDSCAPING PLAN INDICATING THE LOCATION OF REQUIRED STREET TREES SHALL BE SUBMITTED TO THE CITY OF WILMINGTON TRANSPORTATION PLANNING AND TRAFFIC ENGINEERING DIVISIONS FOR REVIEW AND APPROVAL PRIOR TO THE RECORDING OF THE FINAL PLAT.

ESTIMATED WATER & SANITARY DEMAND			
PROPOSED USE	EXISTING FLOW (GPD)	REQUIREMENT	FLOW (GAL)
MEDICAL OFFICE BUILDIING (52 PRACTIONERS)	0 (SURFACE PARKING)	250 GAL/PRACTIONER/SHIFT	13,000
HOSPITALITY CENTER (24 ROOMS)	0 (SURFACE PARKING)	120 GPD/ROOM	2,880
		TOTAL =	15,880

UTILITY CONSTRUCTION NOTES:

1. THESE DRAWINGS SHOW INFORMATION OBTAINED FROM THE AVAILABLE RECORDS REGARDING PIPES, CONDUITS, TELEPHONE LINES, AND OTHER STRUCTURES AND CONDITIONS WHICH EXIST ALONG THE LINES OF WORK AND BELOW THE SURFACE OF THE GROUND. THE OWNER AND ENGINEER DISCLAIM ANY RESPONSIBILITIES FOR THE ACCURACY OR COMPLETENESS OF SAID INFORMATION, AND SUCH INFORMATION IS BEING SHOWN ONLY FOR THE CONVENIENCE OF THE CONTRACTOR WHO MUST VERIFY THE INFORMATION TO HIS OWN SATISFACTION DURING THE BIDDING AND CONSTRUCTION PHASES. IF THE CONTRACTOR RELIES ON SAID INFORMATION, HE DOES SO AT HIS OWN RISK. THE GIVING OF THE INFORMATION ON THE CONTRACT DRAWINGS WILL NOT RELIEVE THE CONTRACTOR OF HIS OBLIGATIONS TO SUPPORT AND PROTECT ALL PIPES, CONDUITS, TELEPHONE LINES, AND OTHER STRUCTURES, WHETHER ABOVE OR BELOW GRADE.
2. SHOULD ANY DAMAGE OCCUR TO EXISTING UTILITIES, IT SHALL BE REPAIRED SOLELY AT THE CONTRACTOR'S EXPENSE.
3. THE CONTRACTOR SHALL VERIFY EXISTING INVERTS PRIOR TO CONSTRUCTION OF UNDERGROUND UTILITIES. TEST PITTING OF EXISTING LINES PRIOR TO CONSTRUCTION, IF NECESSARY, SHALL BE COORDINATED WITH THE OWNER.
4. THE CONTRACTOR SHALL NOTIFY THE CFPUA AT LEAST TWO (2) WEEKS PRIOR TO THE START OF CONSTRUCTION AND SHALL COORDINATE ALL CONSTRUCTION PHASES WITH THEM.
5. ALL MATERIALS AND METHODS OF CONSTRUCTION SHALL CONFORM TO THE DRAWINGS, PROJECT SPECIFICATIONS, AND LOCAL BUILDING CODES.
6. ALL DISTURBED AREAS SHALL BE SMOOTHLY GRADED TO PROMOTE POSITIVE DRAINAGE AND STABILIZED WITH TOPSOIL, SEED, AND MULCH. IF SETTLEMENT OCCURS, TOPSOIL, SEEDING, AND MULCH SHALL BE REPEATED UNTIL SETTLEMENT SUBSIDES. (SEE EROSION AND SEDIMENT CONTROL DETAILS AND SPECIFICATIONS.)
7. WATER MAINS WILL BE INSTALLED AT A DEPTH THAT WILL PROVIDE 36" COVER OVER THE PIPES BELOW PROPOSED GRADE UNLESS SHOWN OTHERWISE ON THESE PLANS OR DIRECTED OTHERWISE BY THE ENGINEER.
8. WHEREVER SEWER OR WATER MAINS CROSS ONE ANOTHER, A MINIMUM VERTICAL CLEARANCE OF 24" SHALL BE PROVIDED BETWEEN THE BOTTOM OF THE WATER PIPE AND THE TOP OF THE SEWER PIPE OR THE SEWER SHALL BE CLASS 50 DIP, MINIMUM OF 20 LF CENTERED OVER THE CROSSING.
9. WHEREVER SEWER OR WATER MAINS RUN PARALLEL TO EACH OTHER, A MINIMUM HORIZONTAL SEPARATION OF 10' SHALL BE PROVIDED, OR 24" VERTICAL SEPARATION OR THE SEWER SHALL BE CLASS 50 DIP, MINIMUM OF 20 LF CENTERED OVER THE CROSSING.
10. ALL WATER VALVES, BOXES, AND FIRE HYDRANT ASSEMBLES SHALL BE SET AND ADJUSTED TO FINISHED GRADE.
11. THE OWNER IS RESPONSIBLE FOR THE ACQUISITION OF ALL EASEMENTS, BOTH TEMPORARY AND PERMANENT.
12. THE CONTRACTOR SHALL VERIFY HORIZONTAL AND VERTICAL SURVEY CONTROL PRIOR TO STAKING OUT CONSTRUCTION. ANY DISCREPANCIES SHALL BE BROUGHT TO THE ATTENTION OF THE ENGINEER PRIOR TO PROCEEDING WITH WORK.
13. ANY PROPERTY LINE MONUMENT DISTURBED DURING CONSTRUCTION SHALL BE REPLACED SOLELY AT THE CONTRACTOR'S EXPENSE.
14. THE CONTRACTOR ASSUMES ALL RESPONSIBILITY FOR ANY DEVIATION FROM THESE PLANS.

FIRE PROTECTION NOTES:

1. HYDRANT MUST BE WITHIN 150' OF THE FDC.
2. THE FDC MUST BE WITHIN 40' OF FIRE DEPARTMENT VEHICLE PLACEMENT.
3. LANDSCAPING OR PARKING CANNOT BLOCK OR IMPEDE THE FDC OR FIRE HYDRANTS. A 3-FOOT CLEAR SPACE SHALL BE MAINTAINED AROUND THE CIRCUMFERENCE OF THE HYDRANT AND FDC.
4. HYDRANTS MUST BE LOCATED WITHIN 8' OF THE CURB.
5. COMBUSTIBLE MATERIALS MAY NOT BE STORED OR ERECTED ONSITE WITHOUT CITY FIRE INSPECTOR APPROVAL.
6. NEW HYDRANTS MUST BE BROUGHT INTO SERVICE PRIOR TO COMBUSTIBLE MATERIALS BEING DELIVERED TO THE JOB SITE.
7. UNDERGROUND FIRE LINE AND PRIVATE WATER MAINS MUST BE PERMITTED AND INSPECTED BY THE WILMINGTON FIRE DEPARTMENT FROM THE PUBLIC RIGHT-OF-WAY TO THE BUILDING. CONTACT THE WILMINGTON FIRE DEPARTMENT DIVISION OF FIRE AND LIFE SAFETY AT 910-343-0696 FOR ADDITIONAL INFORMATION.
8. A MINIMUM OF 5' SHALL SEPARATE UNDERGROUND FIRE LINES OR PRIVATE WATER MAINS FROM UNDERGROUND UTILITIES
9. CONTRACTOR SHALL MAINTAIN AN ALL WEATHER ACCESS ROAD AROUND THE CONSTRUCTION SITE FOR EMERGENCY VEHICLES AT ALL TIMES.
10. TEMPORARY STREET SIGNS SHALL BE INSTALLED AT EACH STREET INTERSECTION WHEN CONSTRUCTION OF NEW ROADWAYS ALLOWS PASSAGE BY VEHICLES.

UTILITY NOTES:

1. SCHEDULE A PRECONSTRUCTION MEETING WITH CAPE FEAR PUBLIC UTILITY AUTHORITY 48 HOURS PRIOR TO CONSTRUCTION OF WATER AND SEWER LINES.
2. WATER AND SANITARY SEWER UTILITY MAINS ARE PRIVATE BEYOND THE PUBLIC STREET RIGHT-OF-WAY.
3. THIS PROJECT SHALL COMPLY WITH THE CFPUA CROSS CONNECTION CONTROL REQUIREMENTS. WATER METER(S) CANNOT BE RELEASED UNTIL ALL REQUIREMENTS ARE MET AND NCDENR HAS ISSUED THE "FINAL APPROVAL".
4. ALL COMMERCIAL WATER SERVICES AND ANY IRRIGATION SYSTEMS SUPPLIED BY CFPUA WATER SHALL HAVE A BACKFLOW PREVENTION DEVICE ACCEPTABLE TO CFPUA AND APPROVED BY USCFCCCHR OR ASSE.
5. BACKFLOW PREVENTION AND METERS WILL BE PROVIDED FOR BOTH FIRE LINES (RPZ) AND DOMESTIC SERVICE (RPZ). FIRE LINE BACKFLOW PREVENTER AND DOMESTIC SERVICE BACKFLOW PREVENTER WILL BE LOCATED AS SHOWN ON THE UTILITY PLANS. INSTALLER OF BACKFLOW PREVENTERS MUST CONTACT CFPUA PRIOR TO INSTALLING UNITS TO GIVE CFPUA THE OPTION TO VERIFY INSTALLATION PROCEDURES.

5.1. REDUCED PRESSURE PRINCIPLE ASSEMBLY FOR DOMESTIC WATER SERVICE

5.2. REDUCE PRESSURE DETECTOR ASSEMBLY WILL BE UTILIZED FOR THE BACKFLOW PREVENTER ON THE FIRE SERVICE.

6. IF THE CONTRACTOR DESIRES CFPUA WATER FOR CONSTRUCTION HE SHALL APPLY IN ADVANCE FOR THIS SERVICE AND MUST PROVIDE A REDUCED PRESSURE ZONE (RPZ) BACKFLOW PREVENTION DEVICE ON THE DEVELOPER'S SIDE OF THE WATER METER BOX.
7. WATER: 1.5" & 2" PVC MAINS SHALL BE CONSTRUCTED USING ASTM D2241, IPS, GASKETED PIPE, SDR 21. 4"-12" PVC MAINS AND SERVICES SHALL BE CONSTRUCTED USING AWWA C-900 PVC, CL235 (DR-18).
8. SANITARY SEWER: FOR PIPE SIZES 4" AND 6" PIPE SHALL BE SCH 40 CONFORMING TO THE REQUIREMENTS OF ASTM D1785 WITH SOLVENT WELD JOINTS CONFORMING TO ASTM D2672. FOR PIPE SIZES 8" THROUGH 12", PIPE SHALL BE CLASS 150, DR18 CONFORMING TO THE REQUIREMENTS OF AWWA C900 WITH ELASTOMERIC PUSH-ON JOINTS CONFORMING TO ASTM D3212 OR ASTM D3139.
9. WATER AND SEWER SERVICES CANNOT BE ACTIVATED ON NEW MAINS UNTIL ENGINEER'S CERTIFICATION AND AS-BUILTS ARE RECEIVED AND "FINAL APPROVAL" ISSUED BY PUBLIC WATER SUPPLY SECTION OF NCDENR AND "FINAL ENGINEERING CERTIFICATION" ISSUED BY DIVISION OF WATER QUALITY OF NCDENR.
10. PVC WATER MAINS AND POLYETHYLENE SERVICES ARE TO BE MARKED WITH NO. 10 SINGLE STRAND INSULATED COPPER WIRE INSTALLED THE ENTIRE LENGTH AND STRAPPED TO THE PIPES WITH DUCT TAPE. THE INSULATED WIRE IS TO BE STRIPPED TO BARE WIRE AND SECURED TO ALL VALVES. THIS WIRE IS TO BE ACCESSIBLE AT ALL FIRE HYDRANTS AND WATER METER BOXES TO AID IN FUTURE LOCATION OF FACILITIES.
11. SITE UTILITY CONTRACTOR TO PROVIDE WATER AND SANITARY SEWER SERVICE TO WITHIN 5 FEET OF THE BUILDING. CONTRACTOR SHALL COORDINATE SITE PLAN CONNECTIONS WITH THE ARCHITECTURAL BUILDING PLANS.
12. MAXIMUM BENDING RADIUS FOR 8" C-900 PVC WATER MAIN BENDS IS 380' (ONE-HALF MANUFACTURER'S RECOMMENDED ALLOWABLE LONGITUDINAL BENDING).
13. FIRE SPRINKLERS WILL BE PROVIDED FOR BUILDING.
14. UNDERGROUND UTILITIES: ALL NEW UTILITIES SHALL BE INSTALLED UNDERGROUND, EXCEPT WHERE SUCH PLACEMENT IS PROHIBITED OR DEEMED IMPRACTICAL BY THE UTILITY PROVIDER. UNDERGROUND TERMINAL FACILITIES FOR STREET LIGHTING ALONG THE PUBLIC STREETS ABUTTING THE SUBJECT SITE SHALL BE INSTALLED BY THE DEVELOPER.
15. MINIMUM OF 36" COVERAGE ABOVE ALL WATERMAINS.
16. MINIMUM OF 36" VERTICAL SEPARATION BETWEEN WATERLINES AND STORMDRAIN CURB INLETS.

RELATION OF WATER MAINS TO SEWERS:

1. LATERAL SEPARATION OF SEWERS AND WATER MAINS: WATER MAINS SHALL BE LAID AT LEAST 10 FEET LATERALLY FROM EXISTING OR PROPOSED SEWERS UNLESS LOCAL CONDITIONS OR BARRIERS PREVENT A 10 FOOT LATERAL SEPARATION, IN WHICH CASE:

1.1. THE WATER MAIN IS LAID IN A SEPARATE TRENCH, WITH THE ELEVATION OF THE BOTTOM OF THE WATER MAIN AT LEAST 18 INCHES ABOVE THE TOP OF THE SEWER, OR

1.2. THE WATER MAIN IS LAID IN THE SAME TRENCH AS THE SEWER WITH THE WATER MAIN LOCATED AT ONE SIDE ON A BENCH OF UNDISTURBED EARTH, AND ABOVE THE TOP OF THE SEWER.

2. CROSSING A WATER MAIN OVER A SEWER MAIN: WHENEVER IT IS NECESSARY FOR A WATER MAIN TO CROSS OVER A SEWER THE WATER MAIN SHALL BE LAID AT SUCH AN ELEVATION THAT THE BOTTOM OF THE WATER MAIN IS AT LEAST 24 INCHES ABOVE THE TOP OF THE SEWER MAIN. UNLESS LOCAL CONDITIONS OR BARRIERS PREVENT AN 18 INCH VERTICAL SEPARATION – IN WHICH CASE BOTH THE WATER MAIN AND THE SEWER MAIN SHALL BE CONSTRUCTED OF FERROUS MATERIALS AND WITH JOINTS THAT ARE EQUIVALENT TO WATER MAIN STANDARDS FOR A DISTANCE OF 10 FEET ON EACH SIDE OF THE POINT OF CROSSING.
3. CROSSING A WATER MAIN UNDER A SEWER MAIN: WHENEVER IT IS NECESSARY FOR A WATER MAIN TO CROSS UNDER A SEWER MAIN BOTH THE WATER MAIN AND THE SEWER MAIN SHALL BE CONSTRUCTED OF FERROUS MATERIALS AND WITH JOINTS EQUIVALENT TO WATER MAIN STANDARDS FOR A DISTANCE OF 10 FEET ON EACH SIDE OF THE POINT OF CROSSING.
4. CROSSING A SEWER MAIN/WATER MAIN OVER OR UNDER A STORM DRAIN: WHENEVER IT IS NECESSARY FOR A SEWER MAIN/WATER MAIN TO CROSS A STORM DRAIN PIPE, THE SEWER MAIN/WATER MAIN SHALL BE LAID AT SUCH AN ELEVATION THAT THE OUTSIDE OF THE SEWER MAIN/WATER MAIN NEAREST TO THE OUTSIDE OF THE STORM DRAIN PIPE SHALL MAINTAIN A 24 INCH CLEAR SEPARATION DISTANCE HORIZONTAL, OR THE SEWER MAIN/WATER MAIN SHALL EITHER BE CONSTRUCTED OF DUCTILE IRON PIPE OR ENCASED IN EITHER CONCRETE OR DUCTILE IRON PIPE FOR AT LEAST 5 FEET ON EITHER SIDE OF THE CROSSING.

ADDITIONAL TREATMENTS:

HVAC EQUIPMENT, AIR CONDITIONING WINDOW UNITS, AND OTHER ELECTRICAL EQUIPMENT SHALL NOT BE LOCATED ON STREET FRONTAGES. ALL SUCH EQUIPMENT SHALL BE PLACED IN THE INTERIOR YARDS OR ON THE ROOF OF THE BUILDING AND SCREENED FROM THE RIGHT OF WAY. THROUGH-WALL MECHANICAL UNITS ARE PERMITTED ON ANY FACADE IF THEY ARE INCORPORATED INTO THE DESIGN OF THE BUILDING, FLUSH WITH THE FACADE ON WHICH THEY ARE LOCATED, CONCEALED BY A VENT COVER AND HAVE AN INTERNAL DRIP SYSTEM FOR CONDENSATION. UTILITY METERS, TRANSFORMERS AND FIXED TRASH DISPOSAL RECEPTACLES SHALL BE SCREENED IN ACCORDANCE WITH THE CITY OF WILMINGTON LAND DEVELOPMENT CODE SCREENING REQUIREMENTS.

SOLID WASTE:

1. SOLID WASTE DISPOSAL WILL BE LOCATED IN THE DUMPSTER AREA.

UTILITY MARKING:

ALL UNDERGROUND UTILITY LINES OUTSIDE OF THE BUILDING FOOTPRINT, EXCEPT LAWN IRRIGATION LINES, SHALL HAVE WARNING TAPE INSTALLED IN THE BACKFILL BETWEEN 6" TO 24" BELOW FINISHED GRADE, DIRECTLY OVER PIPING.

1. METALLIC LINES SHALL BE IDENTIFIED WITH PRINTED DURABLE PLASTIC WARNING TAPE, MINIMUM 3" WIDTH AT 12" BELOW FINISHED GRADE, WITH LETTERING TO IDENTIFY BURIED LINE BELOW.
2. NON-METALLIC LINES, OTHER THAN GAS LINES, SHALL BE IDENTIFIED BY DETECTABLE WARNING TAPE, MINIMUM 2" WIDTH AT 12" BELOW FINISHED GRADE, WITH LETTERING TO IDENTIFY BURIED LINE BELOW.
3. 2009 NC GAS CODE 404.14.3 TRACER: AN INSULATED COPPER WIRE OR OTHER APPROVED CONDUCTOR SHALL BE INSTALLED ADJACENT TO UNDERGROUND NON-METALLIC LINES. ACCESS SHALL BE PROVIDED TO THE TRACER WIRE OR THE TRACER WIRE SHALL TERMINATE ABOVE GROUND AT THE END OF THE NON-METALLIC LINES. THE TRACER WIRE SIZE SHALL NOT BE LESS THAN 18 AWG AND THE INSULATION TYPE SHALL BE SUITABLE FOR DIRECT BURIAL.

NHRMC OUTPATIENT CARDIOLOGY CENTER

1415 PHYSICIANS DRIVE
WILMINGTON NC, 28402

LS3P ASSOCIATES LTD.
2528 INDEPENDENCE BLVD. SUITE 200
WILMINGTON, NORTH CAROLINA 28412
TEL. 910.790.9901 FAX 910.790.3111
WWW.LS3P.COM

NORTH CAROLINA PROFESSIONAL ENGINEER SEAL 025503 RICHARD A. MOORE 6/13/13

REVISIONS:

No.	Description	Date
0	DESIGN DEVELOPMENT	02/27/2013
1	TRC COMMENT REVISIONS	04/17/2013
2	TRC COMMENT REVISIONS	06/13/2013

PROJECT: 04853-0015
DATE: 11 JUNE 2013
DRAWN BY: EEM
CHECKED BY: RAM

CR-001

SOLUTIONS THROUGH LISTENING
SERVICE BY DESIGN
DESIGN DEVELOPMENT

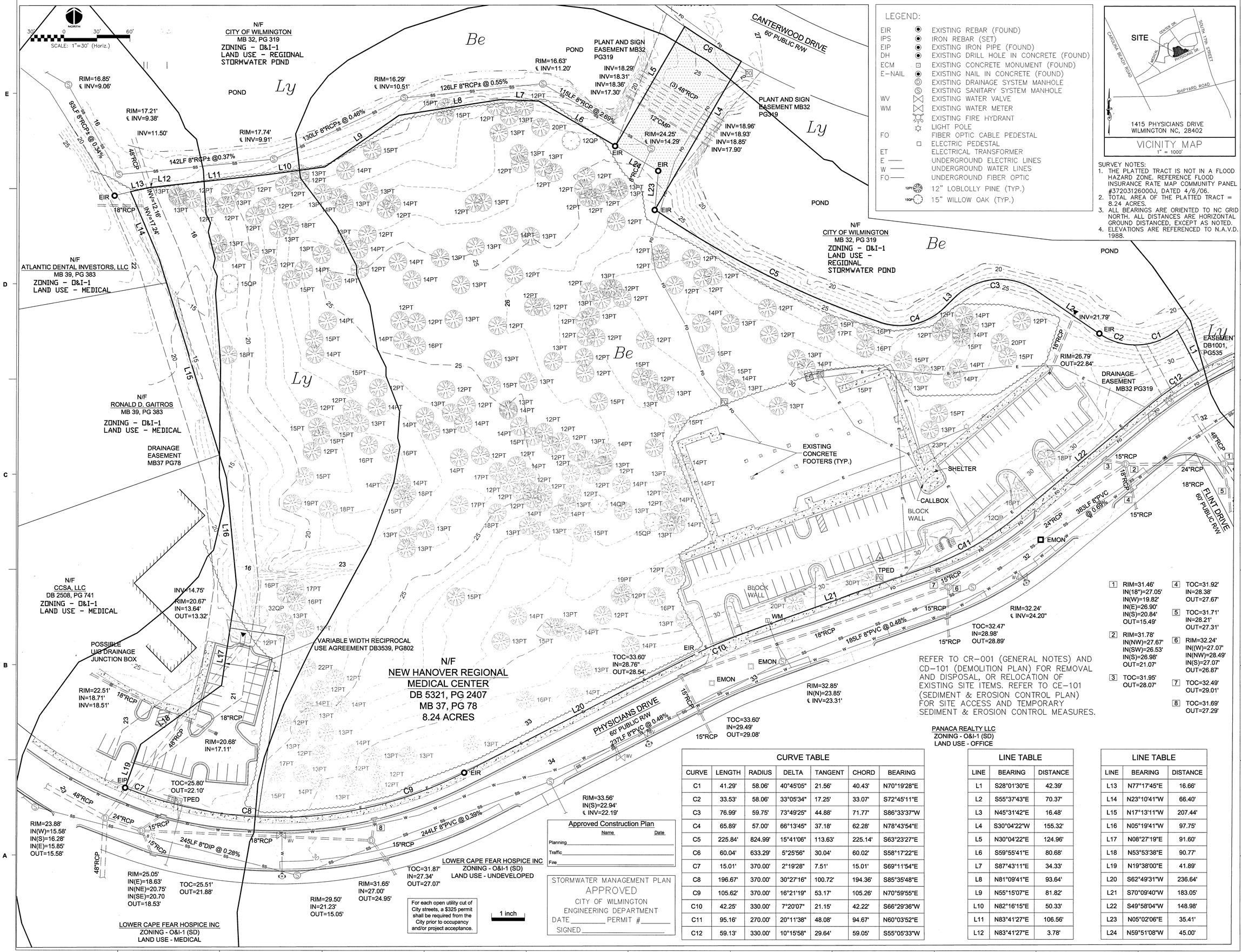

LEGEND:

EIR	⦿	EXISTING REBAR (FOUND)
IPS	⦿	IRON REBAR (SET)
EIP	⦿	EXISTING IRON PIPE (FOUND)
DH	⦿	EXISTING DRILL HOLE IN CONCRETE (FOUND)
ECM	⊡	EXISTING CONCRETE MONUMENT (FOUND)
E-NAIL	⦿	EXISTING NAIL IN CONCRETE (FOUND)
	Ⓓ	EXISTING DRAINAGE SYSTEM MANHOLE
	Ⓢ	EXISTING SANITARY SYSTEM MANHOLE
WV	⋈	EXISTING WATER VALVE
WM	⋈	EXISTING WATER METER
	⋇	EXISTING FIRE HYDRANT
	☼	LIGHT POLE
FO		FIBER OPTIC CABLE PEDESTAL
	□	ELECTRIC PEDESTAL
ET		ELECTRICAL TRANSFORMER
E ——		UNDERGROUND ELECTRIC LINES
W ——		UNDERGROUND WATER LINES
FO ——		UNDERGROUND FIBER OPTIC
12PT		12" LOBLOLLY PINE (TYP.)
15QP		15" WILLOW OAK (TYP.)

1415 PHYSICIANS DRIVE
WILMINGTON NC, 28402

VICINITY MAP
1" = 1000'

SURVEY NOTES:
1. THE PLATTED TRACT IS NOT IN A FLOOD HAZARD ZONE. REFERENCE FLOOD INSURANCE RATE MAP COMMUNITY PANEL #3720312600OJ, DATED 4/6/06.
2. TOTAL AREA OF THE PLATTED TRACT = 8.24 ACRES.
3. ALL BEARINGS ARE ORIENTED TO NC GRID NORTH. ALL DISTANCES ARE HORIZONTAL GROUND DISTANCED, EXCEPT AS NOTED.
4. ELEVATIONS ARE REFERENCED TO N.A.V.D. 1988.

CURVE TABLE						
CURVE	LENGTH	RADIUS	DELTA	TANGENT	CHORD	BEARING
C1	41.29'	58.06'	40°45'05"	21.56'	40.43'	N70°19'28"E
C2	33.53'	58.06'	33°05'34"	17.25'	33.07'	S72°45'11"E
C3	76.99'	59.75'	73°49'25"	44.88'	71.77'	S86°33'37"W
C4	65.89'	57.00'	66°13'45"	37.18'	62.28'	N78°43'54"E
C5	225.84'	824.99'	15°41'06"	113.63'	225.14'	S63°23'27"E
C6	60.04'	633.29'	5°25'56"	30.04'	60.02'	S58°17'22"E
C7	15.01'	370.00'	2°19'28"	7.51'	15.01'	S69°11'54"E
C8	196.67'	370.00'	30°27'16"	100.72'	194.36'	S85°35'48"E
C9	105.62'	370.00'	16°21'19"	53.17'	105.26'	N70°59'55"E
C10	42.25'	330.00'	7°20'07"	21.15'	42.22'	S66°29'36"W
C11	95.16'	270.00'	20°11'38"	48.08'	94.67'	N60°03'52"E
C12	59.13'	330.00'	10°15'58"	29.64'	59.05'	S55°05'33"W

LINE TABLE		
LINE	BEARING	DISTANCE
L1	S28°01'30"E	42.39'
L2	S55°37'43"E	70.37'
L3	N45°31'42"E	16.48'
L4	S30°04'22"W	155.32'
L5	N30°04'22"E	124.96'
L6	S59°55'41"E	80.68'
L7	S87°43'11"E	34.33'
L8	N81°09'41"E	93.64'
L9	N55°15'07"E	81.82'
L10	N82°16'15"E	50.33'
L11	N83°41'27"E	106.56'
L12	N83°41'27"E	3.78'

LINE TABLE		
LINE	BEARING	DISTANCE
L13	N77°17'45"E	16.66'
L14	N23°10'41"W	66.40'
L15	N17°13'11"W	207.44'
L16	N05°19'41"W	97.75'
L17	N08°27'19"E	91.60'
L18	N53°53'38"E	90.77'
L19	N19°38'00"E	41.89'
L20	S62°49'31"W	236.64'
L21	S70°09'40"W	183.05'
L22	S49°58'04"W	148.98'
L23	N05°02'06"E	35.41'
L24	N59°51'08"W	45.00'

LS3P ASSOCIATES LTD.
2528 INDEPENDENCE BLVD. SUITE 200
WILMINGTON, NORTH CAROLINA 28412
TEL. 910.790.9901 FAX 910.790.3111
WWW.LS3P.COM

NHRMC OUTPATIENT CARDIOLOGY CENTER

1415 PHYSICIANS DRIVE
WILMINGTON NC, 28402

SEAL 025503 ENGINEER RICHARD A. MOORE 6/13/13

REVISIONS:

No.	Description	Date
0	DESIGN DEVELOPMENT	02/27/2013
1	TRC COMMENT REVISIONS	04/17/2013
2	TRC COMMENT REVISIONS	06/13/2013

PROJECT: 04853-0015
DATE: 11 JUNE 2013
DRAWN BY: EEM
CHECKED BY: RAM

EXISTING CONDITIONS & SITE INVENTORY MAP

CX-101

SOLUTIONS THROUGH LISTENING
SERVICE BY DESIGN
DESIGN DEVELOPMENT

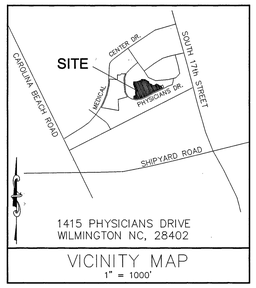

VICINITY MAP
1" = 1000'

CANTERWOOD DRIVE
60' PUBLIC R/W

PHYSICIANS DRIVE
60' PUBLIC R/W

NORTH

SCALE: 1"=30' (Horiz.)

NHRMC OUTPATIENT CARDIOLOGY CENTER

1415 PHYSICIANS DRIVE
WILMINGTON NC, 28402

LS3P ASSOCIATES LTD.
2528 INDEPENDENCE BLVD. SUITE 200
WILMINGTON, NORTH CAROLINA 28412
TEL. 910.790.9901 FAX 910.790.3111
WWW.LS3P.COM

RICHARD A. MOORE
NORTH CAROLINA
REGISTERED
SEAL
025503
ENGINEER
6/27/13

REVISIONS:

No.	Description	Date
0	DESIGN DEVELOPMENT	02/27/2013
1	TRC COMMENT REVISIONS	04/17/2013
2	TRC COMMENT REVISIONS	06/13/2013

PROJECT: 04853-0015
DATE: 11 JUNE 2013
DRAWN BY: EEM
CHECKED BY: RAM

DEMOLITION PLAN

CD-101

SOLUTIONS THROUGH LISTENING
SERVICE BY DESIGN
DESIGN DEVELOPMENT

Approved Construction Plan

	Name	Date
Planning		
Traffic		
Fire		

STORMWATER MANAGEMENT PLAN
APPROVED
CITY OF WILMINGTON
ENGINEERING DEPARTMENT
DATE _____ PERMIT # _____
SIGNED _____

For each open utility cut of City streets, a $325 permit shall be required from the City prior to occupancy and/or project acceptance.

1 inch

DEMOLITION HATCHING LEGEND

- CURB & CONCRETE TO BE REMOVED
- ASPHALT TO BE REMOVED
- SIDEWALK/STEPS TO BE REMOVED
- BUILDING TO BE REMOVED

DEMOLITION LINE LEGEND

- UTILITY TO BE REMOVED
- UTILITY POLE TO BE REMOVED
- OTHER REMOVED (BOLLARD, VALVES, FIRE HYDRANT...)
- SIGN TO BE REMOVED OR REPLACED (SEE DEMO NOTE 16)
- TREE REMOVED
- TREE PROTECTION FENCING

1 RIM=31.46' IN(18")=27.05' IN(W)=19.82' IN(E)=26.90' IN(S)=20.84' OUT=15.49'
2 RIM=31.78' IN(NW)=27.67' IN(SW)=26.53' IN(S)=26.98' OUT=21.07'
3 TOC=31.95' OUT=28.07'
4 TOC=31.92' IN=28.38' OUT=27.67'
5 TOC=31.71' IN=28.21' OUT=27.31'
6 RIM=32.24' IN((W)=27.07' IN(NW)=28.49' IN(S)=27.07' OUT=26.87'
7 TOC=32.49' OUT=29.01'
8 TOC=31.69' OUT=27.29'

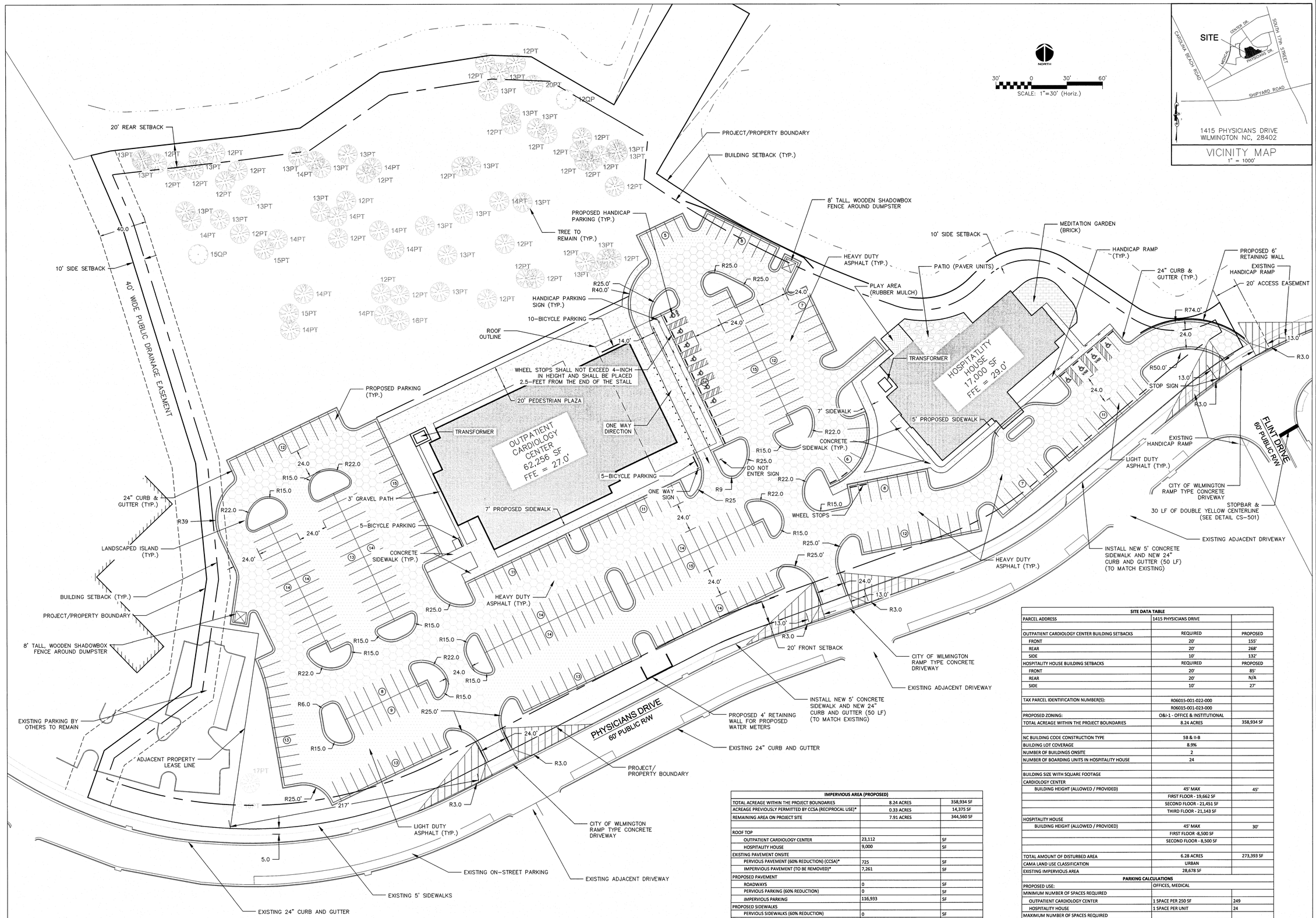

IMPERVIOUS AREA (PROPOSED)		
TOTAL ACREAGE WITHIN THE PROJECT BOUNDARIES	8.24 ACRES	358,934 SF
ACREAGE PREVIOUSLY PERMITTED BY CCSA (RECIPROCAL USE)*	0.33 ACRES	14,375 SF
REMAINING AREA ON PROJECT SITE	7.91 ACRES	344,560 SF
ROOF TOP		
OUTPATIENT CARDIOLOGY CENTER	23,112	SF
HOSPITALITY HOUSE	9,000	SF
EXISTING PAVEMENT ONSITE		
PERVIOUS PAVEMENT (60% REDUCTION) (CCSA)*	725	SF
IMPERVIOUS PAVEMENT (TO BE REMOVED)*	7,261	SF
PROPOSED PAVEMENT		
ROADWAYS	0	SF
PERVIOUS PARKING (60% REDUCTION)	0	SF
IMPERVIOUS PARKING	116,933	SF
PROPOSED SIDEWALKS		
PERVIOUS SIDEWALKS (60% REDUCTION)	0	SF
IMPERVIOUS SIDEWALK	13,304	SF
FUTURE ALLOTMENT	0	SF
OTHER (HOSPITALITY HOUSE PATIO & MEDITATION GARDEN)	2,370	SF
TOTAL ONSITE IMPERVIOUS AREA	164,719	SF
PERCENTAGE (ONSITE IMPERVIOUS AREA/ONSITE AREA)	47.8%	
PERCENTAGE (EXIST. ONSITE IMPERVIOUS AREA/ONSITE AREA)	2.2%	
TOTAL IMPERVIOUS SURFACES SHOWN IN THE STREET YARD	0	SF

*NOT INCLUDED IN ONSITE IMPERVIOUS AREA CALCULATIONS

SITE DATA TABLE		
PARCEL ADDRESS	1415 PHYSICIANS DRIVE	
OUTPATIENT CARDIOLOGY CENTER BUILDING SETBACKS	REQUIRED	PROPOSED
FRONT	20'	155'
REAR	20'	268'
SIDE	10'	132'
HOSPITALITY HOUSE BUILDING SETBACKS	REQUIRED	PROPOSED
FRONT	20'	85'
REAR	20'	N/A
SIDE	10'	27'
TAX PARCEL IDENTIFICATION NUMBER(S):	R06015-001-022-000	
	R06015-001-023-000	
PROPOSED ZONING:	O&I-1 - OFFICE & INSTITUTIONAL	
TOTAL ACREAGE WITHIN THE PROJECT BOUNDARIES	8.24 ACRES	358,934 SF
NC BUILDING CODE CONSTRUCTION TYPE	5B & II-B	
BUILDING LOT COVERAGE	8.9%	
NUMBER OF BUILDINGS ONSITE	2	
NUMBER OF BOARDING UNITS IN HOSPITALITY HOUSE	24	
BUILDING SIZE WITH SQUARE FOOTAGE		
CARDIOLOGY CENTER		
BUILDING HEIGHT (ALLOWED / PROVIDED)	45' MAX	45'
	FIRST FLOOR - 19,662 SF	
	SECOND FLOOR - 21,451 SF	
	THIRD FLOOR - 21,143 SF	
HOSPITALITY HOUSE		
BUILDING HEIGHT (ALLOWED / PROVIDED)	45' MAX	30'
	FIRST FLOOR -8,500 SF	
	SECOND FLOOR - 8,500 SF	
TOTAL AMOUNT OF DISTURBED AREA	6.28 ACRES	273,393 SF
CAMA LAND USE CLASSIFICATION	URBAN	
EXISTING IMPERVIOUS AREA	28,678 SF	
PARKING CALCULATIONS		
PROPOSED USE:	OFFICES, MEDICAL	
MINIMUM NUMBER OF SPACES REQUIRED		
OUTPATIENT CARDIOLOGY CENTER	1 SPACE PER 250 SF	249
HOSPITALITY HOUSE	1 SPACE PER UNIT	24
MAXIMUM NUMBER OF SPACES REQUIRED		
OUTPATIENT CARDIOLOGY CENTER	1 SPACE PER 170 SF	367
HOSPITALITY HOUSE	I SPACE PER UNIT	24
TOTAL PROPOSED SPACES PROVIDED		338
HANDICAP ACCESSIBLE SPACES REQUIRED		8
HANDICAPE ACCESSIBLE SPACES PROVIDED		11 (3 VAN)
EXISTING USE:	VACANT / RECIPROCAL USE AGREEMENT - PARKING	
SPACES EXISTING (RECIPROCAL USE AGREEMENT)		24
TOTAL PARKING SPACES PROVIDED (PROPOSED + EXISTING)		364
TOTAL BICYCLE PARKING PARKING (REQUIRED / PROVIDED)	20	20

1 inch

For each open utility cut of City streets, a $325 permit shall be required from the City prior to occupancy and/or project acceptance.

Approved Construction Plan

	Name	Date
Planning		
Traffic		
Fire		

STORMWATER MANAGEMENT PLAN
APPROVED
CITY OF WILMINGTON
ENGINEERING DEPARTMENT
DATE _____ PERMIT # _____
SIGNED _____

NHRMC OUTPATIENT CARDIOLOGY CENTER

1415 PHYSICIANS DRIVE
WILMINGTON NC, 28402

LS3P ASSOCIATES LTD.
2528 INDEPENDENCE BLVD. SUITE 200
WILMINGTON, NORTH CAROLINA 28412
TEL. 910.790.9901 FAX 910.790.3111
WWW.LS3P.COM

NORTH CAROLINA REGISTERED PROFESSIONAL ENGINEER SEAL 025503 RICHARD A. MOORE 6/13/13

REVISIONS:

No.	Description	Date
0	DESIGN DEVELOPMENT	02/27/2013
1	TRC COMMENT REVISIONS	04/17/2013
2	TRC COMMENT REVISIONS	06/13/2013

PROJECT: 04853-0015
DATE: 11 JUNE 2013
DRAWN BY: EEM
CHECKED BY: RAM

SITE PLAN

CS-101

SOLUTIONS THROUGH LISTENING
SERVICE BY DESIGN
DESIGN DEVELOPMENT

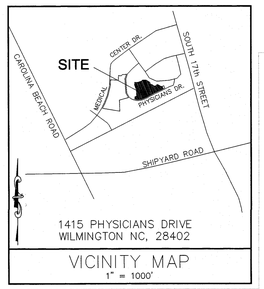

VICINITY MAP
1" = 1000'

LIMITS OF DISTURBANCE = 6.28 AC

LAT: 34° 11' 55" N
LONG: 77° 55' 36" W

1 inch

STORMWATER MANAGEMENT PLAN
APPROVED
CITY OF WILMINGTON
ENGINEERING DEPARTMENT
DATE _____ PERMIT #_____
SIGNED_____

NORTH

30' 0 30' 60'
SCALE: 1"=30' (Horiz.)

Approved Construction Plan

	Name	Date
Planning		
Traffic		
Fire		

For each open utility cut of City streets, a $325 permit shall be required from the City prior to occupancy and/or project acceptance.

SILT FENCE (SF3) SEE DETAIL; SHEET CE-501

TEMP. PERIMETER DIKE SEE DETAIL; SHEET CE-501

SILT FENCE (SF2) SEE DETAIL; SHEET CE-501

SILT FENCE (SF1) SEE DETAIL; SHEET CE-501

TREE PROTECTION (TYP.)

40' WIDE PUBLIC DRAINAGE EASEMENT

SB-2

SKIMMER

SB-1

SKIMMER

SURFACE WITHDRAWAL

BAFFLES (TYP.)

SURFACE WITHDRAWAL

TEMPORARY DIVERSION DITCH (TDD 2) SEE DETAIL; SHEET CE-501

TEMPORARY DIVERSION DITCH (TDD 3) SEE DETAIL; SHEET CE-501

TEMPORARY DIVERSION DITCH (TDD 1) SEE DETAIL; SHEET CE-501

CONSTRUCTION ENTRANCE (TYP.)

ALL EXISTING IMPERVIOUS SURFACES TO BE DEMOLISHED

SILT FENCE (SF4) SEE DETAIL; SHEET CE-501

ROCK CHECK DAM (TYP.)

SB#2
DRAINAGE AREA = 3.40 AC
RATIONAL "C" = 0.25
DESIGN INTENSITY = 7.23 IN/HR
10-YR PEAK FLOW = 6.15 CFS

SB#1
DRAINAGE AREA = 1.29 AC
RATIONAL "C" = 0.35
DESIGN INTENSITY = 7.23 IN/HR
10-YR PEAK FLOW = 3.26 CFS

DRAINAGE AREA (TYP.)

CONSTRUCTION ENTRANCE (TYP.)

TEMPORARY DIVERSION DITCH (TDD 4) SEE DETAIL; SHEET CE-501

TREE PROTECTION (TYP.)

LIMITS OF DISTURBANCE (TYP.)

GROUND STABILIZATION CRITERIA		
SITE AREA DESCRIPTION	STABILIZATION TIMEFRAME	STABILIZATION TIMEFRAME EXCEPTIONS
PERIMETER DIKES, SWALES, DITCHES AND SLOPES	7 DAYS	NONE
HIGH QUALITY WATER ZONES	7 DAYS	NONE
SLOPES STEEPER THAN 3:1	7 DAYS	IF SLOPES ARE 10 FT OR LESS IN IN LENGTH AND ARE NOT STEEPER THAN 2:1, 14 DAYS ARE ALLOWED
SLOPES 3:1 OR FLATTER	14 DAYS	7 DAYS FOR SLOPES GREATER THAN 50 FT IN LENGTH
ALL OTHER AREAS WITH SLOPES FLATTER THAN 4:1	14 DAYS	NONE (EXCEPT FOR PERIMETERS AND HQW ZONES)

EROSION CONTROL NOTES:

1. ANY GRADING BEYOND THE DENUDED LIMITS SHOWN ON THE PLAN IS A VIOLATION OF THE COUNTY EROSION CONTROL ORDINANCE AND IS SUBJECT TO A FINE. **LIMITS OF DISTURBANCE 6.28 ACRES.**
2. GRADING MORE THAN ONE ACRE WITHOUT AN APPROVED EROSION CONTROL PLAN IS A VIOLATION OF THE COUNTY EROSION CONTROL ORDINANCE AND IS SUBJECT TO A FINE. ANY BUILDER THAT ANTICIPATES THE DISTURBANCE OF MORE THAN 1 CUMULATIVE ACRE WILL BE REQUIRED TO GET AN EROSION CONTROL PERMIT FROM NEW HANOVER COUNTY.
3. GROUND COVER MUST BE PROVIDED ON EXPOSED SLOPES WITHIN 21 CALENDAR DAYS FOLLOWING COMPLETION OF ANY PHASE OF GRADING. ALL OTHER AREAS SHOULD BE STABILIZED WITHIN 15 WORKING DAYS OR 90 CALENDAR DAYS, WHICHEVER IS SHORTER, AFTER ANY PHASE OF ACTIVITY.
4. ADDITIONAL MEASURES TO CONTROL EROSION AND SEDIMENT MAY BE REQUIRED BY A REPRESENTATIVE OF THE NEW HANOVER COUNTY ENGINEERING DEPARTMENT.
5. SLOPES SHALL BE GRADED NO STEEPER THAN 3:1.
6. ADDITIONAL DEVICES MAY BE REQUIRED AS AGREED UP ON BY FIELD INSPECTOR, ENGINEER, AND OWNER.
7. IF ACTIVE CONSTRUCTION CEASES IN ANY AREA FOR MORE THAN 15 WORKING DAYS, ALL DISTURBED AREAS MUST BE SEEDED, MULCHED, AND TACKED UNLESS WRITTEN APPROVAL IS GRANTED BY THE EROSION CONTROL OFFICER.
8. WITHIN 24 HOURS FOLLOWING ANY RAIN EVENT, THE CONTRACTOR SHALL INSPECT AND REPAIR, AS NECESSARY, ALL DAMAGED EROSION CONTROL MEASURES.
9. ALL ACTIVITY AND INSTALLATION OF EROSION CONTROL MATTING WILL BE COMPLETE PRIOR TO ANY RAIN EVENT.

CONSTRUCTION SEQUENCE:

PHASE 1 CONSTRUCTION SEQUENCE

1. ESTABLISH LIMITS OF DISTURBANCE AS SHOWN.
2. A PRE-CONSTRUCTION CONFERENCE MUST BE HELD 48 HOURS PRIOR TO THE START OF ANY CONSTRUCTION ACTIVITIES. THE EROSION CONTROL INSPECTOR, ENGINEER, AND CONTRACTOR SHALL MEET AT THE NEW HANOVER COUNTY EROSION CONTROL INSPECTOR'S OFFICE.
3. INSTALL TEMPORARY GRAVEL CONSTRUCTION ENTRANCES AS SHOWN. CONTRACTOR SHALL MAINTAIN A SUFFICIENT GRAVEL ENTRANCE UNTIL FINAL SUB-GRADE IS ESTABLISHED. IF DIRT/MUD GETS ON THE STREET, THEN A WASH RACK WILL NEED TO BE INSTALLED.
4. INSTALL TREE PROTECTION FENCING AND SILT FENCING AS NOTED ON PLANS BEFORE COMMENCING ANY LAND DISTURBANCE ACTIVITY. ADDITIONAL TREE PROTECTION FENCING AND SILT FENCE MAY BE REQUIRED.
5. INSTALL TEMPORARY SKIMMER BASINS WITHIN THE LIMITS OF CONSTRUCTION AS SHOWN ON THE PLANS IN ORDER TO TREAT SEDIMENT LADEN WATER. BASINS SHALL BE CONSTRUCTED PRIOR TO CONSTRUCTION OF ANY DIVERSION DITCHES THAT CONVEY WATER TO THE BASINS. CONTRACTOR TO FIELD ADJUST TEMPORARY DIVERSION DITCHES AS REQUIRED TO MAINTAIN THE DIVERSION TO THE BASINS.
6. COMMENCE GRUBBING AND ROUGH GRADING WITHIN THE LIMITS OF CONSTRUCTION.
7. COMMENCE DEMOLITION OF EXISTING BUILDINGS, DRIVES, FENCES, GATES, WELLS, GARDENS AND EXISTING UTILITY SERVICES. ALL DEMOLITION MATERIAL SHALL BE DISPOSED OF, SALVAGED, OR RECYCLED PER THE PROJECT SPECIFICATIONS.
8. COORDINATE DISCONNECTION OF EXISTING UTILITIES:
   - ELECTRICAL SERVICES AND POLES WITH PROGRESS ENERGY
   - TELEPHONE SERVICES AND POLES WITH BELL SOUTH
   - CABLE WITH TIME WARNER CABLE
   - SEWER AND WATER SERVICES WITH CAPE FEAR PUBLIC UTILITY AUTHORITY
   - STORM DRAINAGE SYSTEM WITH CITY OF WILMINGTON
9. PROVIDE TEMPORARY STABILIZATION AND SEEDING AS NECESSARY TO PREVENT EROSION. REFER TO SHEET CE-501 FOR GROUND STABILIZATION CRITERIA AND SEEDING SCHEDULE.

EROSION CONTROL MAINTENANCE PLAN:

1. ALL SEDIMENT AND EROSION CONTROL DEVICES SHALL BE INSPECTED AND REPAIRED, AS NECESSARY, EVERY SEVEN (7) DAYS OR AFTER EACH RAINFALL OCCURRENCE THAT EXCEEDS ONE-HALF (0.5) INCH.
2. ALL EROSION CONTROL DEVICES SHALL BE PROPERLY MAINTAINED DURING ALL PHASES OF CONSTRUCTION UNTIL THE COMPLETION OF ALL CONSTRUCTION ACTIVITIES AND ALL DISTURBED AREAS HAVE BEEN STABILIZED. ADDITIONAL CONTROL DEVICES MAY BE REQUIRED DURING CONSTRUCTION IN ORDER TO CONTROL EROSION AND/OR OFFSITE SEDIMENTATION. ALL TEMPORARY CONTROL DEVICES SHALL BE REMOVED ONCE CONSTRUCTION IS COMPLETE AND THE SITE IS STABILIZED.
3. SEDIMENT SHALL BE REMOVED FROM BEHIND THE SILT FENCE WHEN IT BECOMES ABOUT 0.5 FEET DEEP. THE SEDIMENT FENCE WILL BE REPAIRED OR REPLACED AS NECESSARY TO MAINTAIN A BARRIER.
4. ALL AREAS WILL BE FERTILIZED, RESEEDED AS NECESSARY, AND MULCHED ACCORDING TO SPECIFICATIONS IN THE VEGETATIVE PLAN TO MAINTAIN A VIGOROUS, DENSE VEGETATIVE COVER.
5. STONE CONSTRUCTION ENTRANCE TO BE CLEANED WHEN SEDIMENT ACCUMULATIONS ARE VISIBLE OR SEDIMENT IS TRACKED ON TO THE PAVEMENT. STONE WILL BE PERIODICALLY TOP DRESSED WITH 2 INCHES OF #4 STONE TO MAINTAIN 6 INCH DEPTH. THE CONTRACTOR SHALL DAILY REMOVE MUD/SOIL FROM PAVEMENT, AS REQUIRED.
6. INSPECT TEMPORARY DIVERSIONS AND CHECK DAMS ONCE A WEEK AND AFTER EVERY RAINFALL. IMMEDIATELY REMOVE SEDIMENT FROM THE FLOW AREA AND REPAIR THE DIVERSION RIDGE AND CHECK DAM. CAREFULLY CHECK OUTLETS AND MAKE TIMELY REPAIRS AS NEEDED. WHEN THE AREA PROTECTED IS PERMANENTLY STABILIZED, REMOVE THE RIDGE AND THE CHANNEL TO BLEND WITH THE NATURAL GROUND LEVEL AND APPROPRIATELY STABILIZE IT.
7. INSPECT TEMPORARY SKIMMER BASINS AT LEAST WEEKLY AND AFTER EACH SIGNIFICANT (1/2" OR GREATER) RAINFALL EVENT AND REPAIR IMMEDIATELY. REMOVE SEDIMENT AND RESTORE THE BASIN TO ITS ORIGINAL DIMENSIONS WHEN IT ACCUMULATES TO ONE-HALF THE DESIGN DEPTH. PLACE REMOVED SEDIMENT IN AN AREA WITH SEDIMENT CONTROLS.
8. CHECK THE SEDIMENT BASIN EMBANKMENT, SPILLWAYS, AND OUTLET FOR EROSION DAMAGE, AND INSPECT THE EMBANKMENT FOR PIPING AND SETTLEMENT. MAKE ALL NECESSARY REPAIRS IMMEDIATELY. REMOVE ALL TRASH AND OTHER DEBRIS FROM THE RISER AND POOL AREA.
9. INSPECT INLETS AT LEAST WEEKLY AND AFTER EACH SIGNIFICANT (0.5" OR GREATER) RAINFALL EVENT. CLEAR THE MESH WIRE OF ANY DEBRIS OR OTHER OBJECTS TO PROVIDE ADEQUATE FLOW FOR SUBSEQUENT RAINS. TAKE CARE NOT TO DAMAGE OR UNDERCUT THE WIRE MESH DURING SEDIMENT REMOVAL. REPLACE STONE AS NEEDED. INLET PROTECTION SHOULD BE CLEANED OUT WHEN IT IS HALF FULL.
10. REPAIR THE BAFFLES IF THEY ARE DAMAGED. RE-ANCHOR THE BAFFLES IF WATER IS FLOWING UNDERNEATH OR AROUND THEM.
11. INSPECT THE SKIMMER FOR CLOGGING. PULL THE SKIMMER TO THE SIDE OF THE BASIN AND REMOVE ANY DEBRIS. ALSO CHECK THE ORIFICE INSIDE THE SKIMMER AND THE ARM OR BARREL PIPE FOR CLOGGING; IF CLOGGED, REMOVE THE DEBRIS.

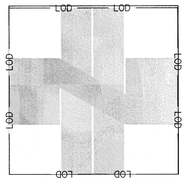

NHRMC OUTPATIENT CARDIOLOGY CENTER

1415 PHYSICIANS DRIVE
WILMINGTON NC, 28402

LS3P ASSOCIATES LTD.
2528 INDEPENDENCE BLVD. SUITE 200
WILMINGTON, NORTH CAROLINA 28412
TEL. 910.790.9901 FAX 910.790.3111
WWW.LS3P.COM

NORTH CAROLINA PROFESSIONAL ENGINEER SEAL 025503 RICHARD A. MOORE 04/13/13

REVISIONS:

No.	Description	Date
0	DESIGN DEVELOPMENT	02/27/2013
1	TRC COMMENT REVISIONS	04/17/2013
2	TRC COMMENT REVISIONS	06/13/2013

PROJECT: 04853-0015
DATE: 11 JUNE 2013
DRAWN BY: EEM
CHECKED BY: RAM

PHASE 1 SEDIMENT & EROSION CONTROL PLAN

CE-101

SOLUTIONS THROUGH LISTENING
SERVICE BY DESIGN
DESIGN DEVELOPMENT

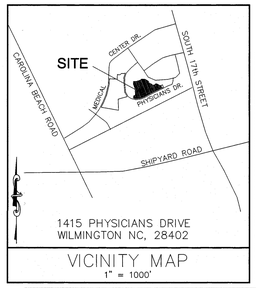

VICINITY MAP
1" = 1000'

LIMITS OF DISTURBANCE = 6.28 AC

LAT: 34° 11' 55" N
LONG: 77° 55' 36" W

1 inch

STORMWATER MANAGEMENT PLAN
APPROVED
CITY OF WILMINGTON
ENGINEERING DEPARTMENT
DATE _____ PERMIT #_____
SIGNED_____

Approved Construction Plan

	Name	Date
Planning		
Traffic		
Fire		

For each open utility cut of City streets, a $325 permit shall be required from the City prior to occupancy and/or project acceptance.

NORTH
30' 0 30' 60'
SCALE: 1"=30' (Horiz.)

SILT FENCE (SF3) SEE DETAIL; SHEET CE-501

TEMP. PERIMETER DIKE SEE DETAIL; SHEET CE-501

SILT FENCE (SF2) SEE DETAIL; SHEET CE-501

SILT FENCE OUTLET (TYP.)

SILT FENCE (SF1) SEE DETAIL; SHEET CE-501

TREE PROTECTION (TYP.)

40' WIDE PUBLIC DRAINAGE EASEMENT

INLET PROTECTION (TYP)

CONSTRUCTION ENTRANCE (TYP.)

LIMITS OF DISTURBANCE (TYP.)

GROUND STABILIZATION CRITERIA		
SITE AREA DESCRIPTION	STABILIZATION TIMEFRAME	STABILIZATION TIMEFRAME EXCEPTIONS
PERIMETER DIKES, SWALES, DITCHES AND SLOPES	7 DAYS	NONE
HIGH QUALITY WATER ZONES	7 DAYS	NONE
SLOPES STEEPER THAN 3:1	7 DAYS	IF SLOPES ARE 10 FT OR LESS IN IN LENGTH AND ARE NOT STEEPER THAN 2:1, 14 DAYS ARE ALLOWED
SLOPES 3:1 OR FLATTER	14 DAYS	7 DAYS FOR SLOPES GREATER THAN 50 FT IN LENGTH
ALL OTHER AREAS WITH SLOPES FLATTER THAN 4:1	14 DAYS	NONE (EXCEPT FOR PERIMETERS AND HQW ZONES)

EROSION CONTROL NOTES:

1. ANY GRADING BEYOND THE DENUDED LIMITS SHOWN ON THE PLAN IS A VIOLATION OF THE COUNTY EROSION CONTROL ORDINANCE AND IS SUBJECT TO A FINE. **LIMITS OF DISTURBANCE 6.28 ACRES.**
2. GRADING MORE THAN ONE ACRE WITHOUT AN APPROVED EROSION CONTROL PLAN IS A VIOLATION OF THE COUNTY EROSION CONTROL ORDINANCE AND IS SUBJECT TO A FINE. ANY BUILDER THAT ANTICIPATES THE DISTURBANCE OF MORE THAN 1 CUMULATIVE ACRE WILL BE REQUIRED TO GET AN EROSION CONTROL PERMIT FROM NEW HANOVER COUNTY.
3. GROUND COVER MUST BE PROVIDED ON EXPOSED SLOPES WITHIN 21 CALENDAR DAYS FOLLOWING COMPLETION OF ANY PHASE OF GRADING. ALL OTHER AREAS SHOULD BE STABILIZED WITHIN 15 WORKING DAYS OR 90 CALENDAR DAYS, WHICHEVER IS SHORTER, AFTER ANY PHASE OF ACTIVITY.
4. ADDITIONAL MEASURES TO CONTROL EROSION AND SEDIMENT MAY BE REQUIRED BY A REPRESENTATIVE OF THE NEW HANOVER COUNTY ENGINEERING DEPARTMENT.
5. SLOPES SHALL BE GRADED NO STEEPER THAN 3:1.
6. ADDITIONAL DEVICES MAY BE REQUIRED AS AGREED UP ON BY FIELD INSPECTOR, ENGINEER, AND OWNER.
7. IF ACTIVE CONSTRUCTION CEASES IN ANY AREA FOR MORE THAN 15 WORKING DAYS, ALL DISTURBED AREAS MUST BE SEEDED, MULCHED, AND TACKED UNLESS WRITTEN APPROVAL IS GRANTED BY THE EROSION CONTROL OFFICER.
8. WITHIN 24 HOURS FOLLOWING ANY RAIN EVENT, THE CONTRACTOR SHALL INSPECT AND REPAIR, AS NECESSARY, ALL DAMAGED EROSION CONTROL MEASURES.
9. ALL ACTIVITY AND INSTALLATION OF EROSION CONTROL MATTING WILL BE COMPLETE PRIOR TO ANY RAIN EVENT.

CONSTRUCTION SEQUENCE:

PHASE 2 CONSTRUCTION SEQUENCE

1. BEGIN PHASE 2 SEDIMENT AND EROSION CONTROL UPON COMPLETION OF CLEARING AND GRUBBING OPERATIONS, ROUGH GRADING OF THE SITE AND INSTALLATION OF THE STORM WATER COLLECTION SYSTEM.
2. MAINTAIN MEASURES FROM PHASE 1 AS SHOWN IN THIS PHASE 2 SEDIMENT AND EROSION CONTROL DRAWING.
3. REMOVE MEASURES FROM PHASE 1 AS SHOWN. THIS INCLUDES TEMPORARY SEDIMENT BASINS AND TEMPORARY DIVERSIONS. STABILIZE THESE AREAS ACCORDING TO THE STABILIZATION MEASURES REQUIRED HEREIN.
4. INSTALL INLET PROTECTION AS SHOWN IN THE PHASE 2 PLAN AND CONSTRUCTION DETAILS.
5. COMPLETE CONSTRUCTION OF THE PROPOSED IMPROVEMENTS.
6. UPON COMPLETION OF CONSTRUCTION, ESTABLISH PERMANENT GROUND COVER AND OVERALL SITE STABILIZATION.
7. REMOVE THE SEDIMENT AND EROSION CONTROL MEASURES.

EROSION CONTROL MAINTENANCE PLAN:

1. ALL SEDIMENT AND EROSION CONTROL DEVICES SHALL BE INSPECTED AND REPAIRED, AS NECESSARY, EVERY SEVEN (7) DAYS OR AFTER EACH RAINFALL OCCURRENCE THAT EXCEEDS ONE-HALF (0.5) INCH.
2. ALL EROSION CONTROL DEVICES SHALL BE PROPERLY MAINTAINED DURING ALL PHASES OF CONSTRUCTION UNTIL THE COMPLETION OF ALL CONSTRUCTION ACTIVITIES AND ALL DISTURBED AREAS HAVE BEEN STABILIZED. ADDITIONAL CONTROL DEVICES MAY BE REQUIRED DURING CONSTRUCTION IN ORDER TO CONTROL EROSION AND/OR OFFSITE SEDIMENTATION. ALL TEMPORARY CONTROL DEVICES SHALL BE REMOVED ONCE CONSTRUCTION IS COMPLETE AND THE SITE IS STABILIZED.
3. SEDIMENT SHALL BE REMOVED FROM BEHIND THE SILT FENCE WHEN IT BECOMES ABOUT 0.5 FEET DEEP. THE SEDIMENT FENCE WILL BE REPAIRED OR REPLACED AS NECESSARY TO MAINTAIN A BARRIER.
4. ALL AREAS WILL BE FERTILIZED, RESEEDED AS NECESSARY, AND MULCHED ACCORDING TO SPECIFICATIONS IN THE VEGETATIVE PLAN TO MAINTAIN A VIGOROUS, DENSE VEGETATIVE COVER.
5. STONE CONSTRUCTION ENTRANCE TO BE CLEANED WHEN SEDIMENT ACCUMULATIONS ARE VISIBLE OR SEDIMENT IS TRACKED ON TO THE PAVEMENT. STONE WILL BE PERIODICALLY TOP DRESSED WITH 2 INCHES OF #4 STONE TO MAINTAIN 6 INCH DEPTH. THE CONTRACTOR SHALL DAILY REMOVE MUD/SOIL FROM PAVEMENT, AS REQUIRED.
6. INSPECT TEMPORARY DIVERSIONS AND CHECK DAMS ONCE A WEEK AND AFTER EVERY RAINFALL. IMMEDIATELY REMOVE SEDIMENT FROM THE FLOW AREA AND REPAIR THE DIVERSION RIDGE AND CHECK DAM. CAREFULLY CHECK OUTLETS AND MAKE TIMELY REPAIRS AS NEEDED. WHEN THE AREA PROTECTED IS PERMANENTLY STABILIZED, REMOVE THE RIDGE AND THE CHANNEL TO BLEND WITH THE NATURAL GROUND LEVEL AND APPROPRIATELY STABILIZE IT.
7. INSPECT TEMPORARY SKIMMER BASINS AT LEAST WEEKLY AND AFTER EACH SIGNIFICANT (1/2" OR GREATER) RAINFALL EVENT AND REPAIR IMMEDIATELY. REMOVE SEDIMENT AND RESTORE THE BASIN TO ITS ORIGINAL DIMENSIONS WHEN IT ACCUMULATES TO ONE-HALF THE DESIGN DEPTH. PLACE REMOVED SEDIMENT IN AN AREA WITH SEDIMENT CONTROLS.
8. CHECK THE SEDIMENT BASIN EMBANKMENT, SPILLWAYS, AND OUTLET FOR EROSION DAMAGE, AND INSPECT THE EMBANKMENT FOR PIPING AND SETTLEMENT. MAKE ALL NECESSARY REPAIRS IMMEDIATELY. REMOVE ALL TRASH AND OTHER DEBRIS FROM THE RISER AND POOL AREA.
9. INSPECT INLETS AT LEAST WEEKLY AND AFTER EACH SIGNIFICANT (0.5" OR GREATER) RAINFALL EVENT. CLEAR THE MESH WIRE OF ANY DEBRIS OR OTHER OBJECTS TO PROVIDE ADEQUATE FLOW FOR SUBSEQUENT RAINS. TAKE CARE NOT TO DAMAGE OR UNDERCUT THE WIRE MESH DURING SEDIMENT REMOVAL. REPLACE STONE AS NEEDED. INLET PROTECTION SHOULD BE CLEANED OUT WHEN IT IS HALF FULL.
10. REPAIR THE BAFFLES IF THEY ARE DAMAGED. RE-ANCHOR THE BAFFLES IF WATER IS FLOWING UNDERNEATH OR AROUND THEM.
11. INSPECT THE SKIMMER FOR CLOGGING. PULL THE SKIMMER TO THE SIDE OF THE BASIN AND REMOVE ANY DEBRIS. ALSO CHECK THE ORIFICE INSIDE THE SKIMMER AND THE ARM OR BARREL PIPE FOR CLOGGING; IF CLOGGED, REMOVE THE DEBRIS.

NHRMC OUTPATIENT CARDIOLOGY CENTER

1415 PHYSICIANS DRIVE
WILMINGTON NC, 28402

LS3P ASSOCIATES LTD.
2528 INDEPENDENCE BLVD. SUITE 200
WILMINGTON, NORTH CAROLINA 28412
TEL. 910.790.9901 FAX 910.790.3111
WWW.LS3P.COM

NORTH CAROLINA REGISTERED LANDSCAPE ARCHITECT SEAL 025503 RICHARD A. MOORE 6/13/13

REVISIONS:

No.	Description	Date
0	DESIGN DEVELOPMENT	02/27/2013
1	TRC COMMENT REVISIONS	04/17/2013
2	TRC COMMENT REVISIONS	06/13/2013

PROJECT: 04853-0015
DATE: 11 JUNE 2013
DRAWN BY: EEM
CHECKED BY: RAM

PHASE 2 SEDIMENT & EROSION CONTROL PLAN

CE-102

SOLUTIONS THROUGH LISTENING
SERVICE BY DESIGN
DESIGN DEVELOPMENT

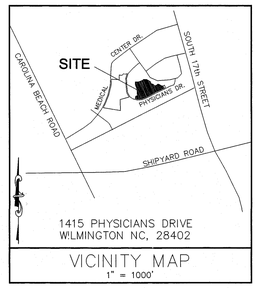

VICINITY MAP
1" = 1000'

NORTH

30' 0 30' 60'
SCALE: 1"=30' (Horiz.)

LEGEND

- EXISTING CONTOUR
- PROPOSED CONTOUR
- STORM DRAINAGE PIPE
- TREE PROTECTION FENCING
- BUILDING ROOF OUTLINE
- STORM DRAINAGE MANHOLE
- STORM DRAINAGE CATCH BASIN
- 28.00 SPOT ELEVATION (TOP OF CURB)

Approved Construction Plan

	Name	Date
Planning		
Traffic		
Fire		

STORMWATER MANAGEMENT PLAN
APPROVED
CITY OF WILMINGTON
ENGINEERING DEPARTMENT
DATE_____ PERMIT #_____
SIGNED_____

For each open utility cut of City streets, a $325 permit shall be required from the City prior to occupancy and/or project acceptance.

1 inch

EXISTING POND
NORMAL POOL=15.00'

EXISTING POND
NORMAL POOL=18.00'

OUTFALL A
INV. OUT=15.00'

MH 1
RIM=21.30'
INV=15.24'

24"RCP
21 LF @ 0.50%

MH 2
RIM=20.90'
INV=16.07'

24"RCP
168 LF @ 0.50%

OUTFALL B
INV. OUT=18.00'

TW=27.00'
BW=23.50'

CB 13
RIM=25.42'
INV=18.14'

TW=27.50'
BW=27.00'

CB 22
RIM=25.50'
INV=19.08'

24" RCP
20 LF @ 0.70%

TW=27.00'
BW=23.50'

TW=25.50'
BW=25.00'

TW=29.00'
BW=26.00'

OUTFALL C
INV. OUT=18.00'

18" RCP
33 LF @ 1.5%

TW=32.50'
BW=30.25'

TW=32.50'
BW=32.00'

TW=31.00'
TW=30.88'
BW=24.50'

18" RCP
27 LF @ 1.00%

TW=28.50'
BW=28.00'

15" RCP
25 LF @ 0.70%

CB 21
RIM=25.42'
INV=18.90'

15"RCP
25 LF @ 0.50%

24" RCP
25 LF @ 0.90%

24"RCP
59 LF @ 0.90%

24"RCP
60 LF @ 0.70%

ROOF LEADER TIE-IN
(SEE DETAIL CG-501)

CB 3
RIM=25.05'
INV=17.34'

24" RCP
25 LF @ 0.50%

CB 14
RIM=25.12'
INV=18.63'

CB 16
RIM=25.90'
INV=19.56'

CB 23
RIM=27.00'
INV=18.51'

CB 24
RIM=27.05'
INV IN=20.50'
INV OUT=18.78'

18" RCP
28 LF @ 0.90%

OUTFALL D
INV=13.50'

CB 11
RIM=21.38'
INV=18.31'

CB 4
RIM=24.30'
INV=17.69'

24" RCP
71 LF @ 0.50%

DI 15
RIM=25.50'
INV=19.14'

24"RCP
27 LF @ 0.80%

CB 17
RIM=26.16'
INV=19.78'

CB 25
RIM=26.92'
INV=20.75'

ROOF LEADER TIE-IN
(SEE DETAIL CG-501)

CB 10
RIM=22.50'
INV=17.99'

48"RCP
142 LF @ 0.5%

15" RCP
42 LF @ 0.50%

15" RCP
60 LF @ 0.50%

15" RCP
60 LF @ 0.70%

DI 5
RIM=24.50'
INV=18.11'

ROOF LEADER TIE-IN
(SEE DETAIL CG-501)

DI 19
RIM=24.90'
INV=20.94'

2. 24"RCP
77 LF @ 0.80%

CB 18
RIM=26.20'
INV=20.39'

18" RCP 107 LF @ 1.0%

CB 12
RIM=20.85'
INV=18.20'

15" RCP
42 LF @ 0.50%

DI 6
RIM=24.05'
INV=18.42'

15" RCP
62 LF @ 0.50%

DI 20
RIM=24.90'
INV=21.75'

15" RCP
140 LF @ 0.70%

24" RCP
68 LF @ 0.80%

15"RCP 97 LF @ 0.50%

CB 26
RIM=27.53'
INV=21.81'

HP
19.88

YI 29
6'X6'
RIM=20.66'
THROAT=19.66'
INV=14.25'

15" RCP
44 LF @ 0.50%

15" RCP
36 LF @ 0.50%

TW=29.00'
BW=28.50'

CB 28
RIM=26.54'
INV=22.70'

CB 27
RIM=27.96'
INV=22.22'

18" RCP
11 LF@ 4.5%

EX CB
RIM=20.67'
INV=14.75'

CB 9
RIM=22.57'
INV=18.74'

CB 7
RIM=24.70'
INV=18.71'

CB 8
RIM=26.50'
INV=22.28'

15" RCP
44 LF @ 0.70%

TW=33.00'
BW=28.50'

TREE PROTECTION
FENCING (TYP.)

CARDIOLOGY CENTER AND HOSPITALITY HOUSE CONTRACT DIVIDING LINE:

CARDIOLOGY CENTER CONTRACT TO INSTALL TO FINISH GRADE BUILDING PAD (ELEVATION 29.0) AND PAVEMENT SECTION TO BOTTOM ELEVATION OF SUBGRADE.

STORM DRAINAGE AND GRADING NOTES:

1. IN ACCORDANCE WITH NC GENERAL STATUES, NPDES REGULATIONS, AND NHC REQUIREMENTS, STORMWATER DISCHARGE OUTFALLS SHALL BE INSPECTED BY THE CONTRACTOR. INSPECTIONS SHALL BE PERFORMED BY THE CONTRACTOR AFTER EACH STORM EVENT OF 1/2 INCH OR GREATER, WITH ONE WEEKLY INSPECTION MINIMUM. NCDENR STANDARD INSPECTION REPORTS SHALL BE PREPARED AND SIGNED WITH COPIES PROVIDED TO THE OWNER, ARCHITECT, AND ENGINEER, BY THE CONTRACTOR.
2. INLET PROTECTION SHALL BE INSTALLED AROUND ALL STORM INLETS WITHIN THE LIMITS OF DISTURBANCE. STRUCTURES SHALL BE CONSTRUCTED TO FINAL PROPOSED CONDITION UPON STABILIZATION OF CONTRIBUTING GROUND SURFACES AND REMOVAL OF SEDIMENT FROM STORM PIPES.
3. SEDIMENT / EROSION DEVICES SHALL BE CHECKED BY THE CONTRACTOR DAILY. EACH DEVICE IS TO BE MAINTAINED OR REPLACED IF SEDIMENT ACCUMULATION HAS REACHED ONE HALF THE CAPACITY OF THE DEVICE.
4. ALL DIMENSIONS AND GRADES SHOWN ON THE PLANS SHALL BE FIELD VERIFIED BY THE CONTRACTOR PRIOR TO CONSTRUCTION. CONTRACTOR SHALL NOTIFY ARCHITECT IF ANY DISCREPANCIES EXIST PRIOR TO PROCEEDING WITH CONSTRUCTION FOR NECESSARY PLAN OR GRADE CHANGES. NO EXTRA COMPENSATION SHALL BE PAID TO CONTRACTOR FOR ANY WORK DONE DUE TO DIMENSIONS OR GRADES SHOWN INCORRECTLY ON THESE PLANS IF SUCH NOTIFICATION HAS NOT BEEN GIVEN.
5. UNLESS OTHERWISE NOTED, GRADES AND SPOT ELEVATIONS NOTED ON PLANS INDICATE FINISHED GRADE OR PAVEMENT SURFACE. ALL DIMENSIONS ARE MEASURED TO THE BACK OF CURB UNLESS OTHERWISE INDICATED.
6. WHEN HAND SEEDING, MULCH (HAY OR STRAW) SHOULD BE UNIFORMLY SPREAD AND TACKED OVER SEEDED AREA WITHIN 24 HOURS OF SEEDING.
7. DURING UNSUITABLE GROWING SEASONS, MULCH WILL BE USED AS A TEMPORARY COVER ON SLOPES THAT ARE 4:1 OR STEEPER, MULCH WILL BE ANCHORED.
8. NO LAND DISTURBANCE, INCLUDING TREE REMOVAL, IS TO OCCUR OUTSIDE THE LIMITS SHOWN.

STORM DRAINAGE NOTES:

1. ALL PIPE BEDDING SHALL BE CLASS "C" UNLESS OTHERWISE DIRECTED BY THE ENGINEER.
2. ALL STORM DRAINAGE PIPES SHALL BE RCP CLASS III UNLESS OTHERWISE NOTED ON THE PLANS.
3. DO NOT PLANT TREES WITHIN UTILITY AND DRAINAGE EASEMENTS.
4. THE ENGINEER AND THE CONTRACTOR SHALL INSPECT ALL EXISTING PIPES USED IN THE FINAL DRAINAGE SYSTEM AND AGREE ON THE CONDITION OF THE PIPES PRIOR TO CONSTRUCTION. IF DAMAGE OCCURS TO THESE PIPES DURING CONSTRUCTION, THE CONTRACTOR SHALL BE RESPONSIBLE FOR THE REPAIR OR REPLACEMENT OF THE PIPE(S).
5. THE CONTRACTOR SHALL CONTACT ONECALL BEFORE COMMENCING ANY WORK. THE CONTRACTOR SHALL VERIFY THE LOCATION OF ALL UNDERGROUND UTILITIES WHETHER INDICATED ON THE DRAWINGS OR NOT. THE CONTRACTOR WILL ASSURE THE PRESENCE ONSITE OF A REPRESENTATIVE OF THE GAS COMPANY WHEN WORKING IN THE VICINITY OF ANY GAS MAINS.

CITY OF WILMINGTON STANDARD NOTES:

1. CONTACT THE NORTH CAROLINA ONE CALL CENTER PRIOR TO DOING ANY DIGGING AT 1-800-632-4949.
2. PRIOR TO ANY CLEARING, GRADING OR CONSTRUCTION ACTIVITY, TREE PROTECTION FENCING WILL BE INSTALLED AROUND PROTECTED TREES OR GROVES OF TREES AND NO CONSTRUCTION WORKERS, TOOLS, MATERIALS, OR VEHICLES ARE PERMITTED WITHIN THE TREE PROTECTION FENCING.
3. ALL PAVEMENT MARKINGS IN PUBLIC RIGHTS-OF-WAY AND FOR DRIVEWAYS ARE TO BE THERMOPLASTIC AND MEET CITY AND/OR NCDOT STANDARDS.
4. TRAFFIC CONTROL DEVICES (INCLUDING SIGNS AND PAVEMENT MARKINGS) IN AREAS OPEN TO PUBLIC TRAFFIC ARE TO MEET MUTCD (MANUAL ON UNIFORM TRAFFIC CONTROL DEVICES) STANDARDS.
5. ANY BROKEN OR MISSING SIDEWALK PANELS AND CURBING SHALL BE REPLACED BY THE CONTRACTOR.
6. CONTACT TRAFFIC ENGINEERING 341-7888 TO DISCUSS STREET LIGHTING OPTIONS.
7. IF THE CONTRACTOR DESIRES WATER FOR CONSTRUCTION HE SHALL APPLY WITH THE CFPUA IN ADVANCE FOR THIS SERVICE AND MUST PROVIDE A REDUCED PRESSURE ZONE (RPZ) BACKFLOW PREVENTION DEVICE ON THE DEVELOPER'S SIDE OF THE WATER METER BOX.
8. THE NUMBER AND SPACING OF DRIVEWAYS FOR ALL INTERCONNECTED SITES WILL BE DETERMINED BY THE COMBINED FRONTAGE OF THE INTERCONNECTED PROPERTIES.
9. CONTACT TRAFFIC ENGINEERING TO ENSURE THAT ALL TRAFFIC SIGNAL FACILITIES AND EQUIPMENT ARE SHOWN ON THE PLAN. CALL TRAFFIC ENGINEERING FORTY-EIGHT HOURS PRIOR TO ANY EXCAVATION IN THE RIGHT-OF-WAY.
10. TACTILE WARNING MATS ARE TO BE INSTALLED ON ALL WHEELCHAIR RAMPS.

NOTE (G.S. 113A-57 (2))

THE ANGLE FOR GRADED SLOPES AND FILLS SHALL BE NO GREATER THAN THE ANGLE THAT CAN BE RETAINED BY VEGETATIVE COVER OR OTHER ADEQUATE EROSION CONTROL DEVICES OR STRUCTURES. IN ANY EVENT, SLOPES LEFT EXPOSED WILL, WITHIN 21 CALENDAR DAYS OF COMPLETION OF ANY GRADING, BE PLANTED OR OTHERWISE PROVIDED WITH TEMPORARY OR PERMANENT GROUND COVER, DEVISES, OR STRUCTURES SUFFICIENT TO RESTRAIN EROSION.

NOTE COW(18-458)

NO EQUIPMENT IS ALLOWED ONSITE UNTIL ALL TREE PROTECTION FENCING AND SILT FENCING HAS BEEN INSTALLED AND APPROVED BY LANDSCAPE ARCHITECT.

TREE PROTECTION NOTES:

1. PRIOR TO ANY CLEARING, GRADING, OR CONSTRUCTION ACTIVITY, TREE PROTECTION FENCING WILL BE INSTALLED AROUND PROTECTED TREES OR GROVES OF TREES. NO CONSTRUCTION WORKERS, TOOLS, MATERIALS OR VEHICLES ARE PERMITTED WITHIN THE TREE PROTECTION FENCING.
2. NO LAND DISTURBANCE, INCLUDING TREE REMOVAL, IS TO OCCUR OUTSIDE THE PROJECT BOUNDARY SHOWN ON THE PLANS, UNLESS OTHERWISE NOTED. TREE PROTECTION FENCING IS SHOWN OUTSIDE OF PROJECT BOUNDARY FOR PROTECTION OF EXISTING TREES IS CLOSE PROXIMITY TO PROPOSED CONSTRUCTION. [18-457(B)]
3. PROTECTIVE FENCING IS TO BE PROPERLY MAINTAINED THROUGHOUT THE DURATION OF THE PROJECT. [18-458]
4. LAND CLEARING AND CONSTRUCTION CONTRACTORS SHALL RECEIVE ADEQUATE INSTRUCTION ON TREE PROTECTION REQUIREMENTS AND METHODS. [18-457(D)]
5. NO EQUIPMENT IS ALLOWED ON THE SITE UNTIL ALL TREE PROTECTION FENCING AND SILT FENCING HAS BEEN INSTALLED AND APPROVED BY THE LANDSCAPE ARCHITECT. [18-458]
6. ANY TREES AND/OR AREAS DESIGNATED TO BE PROTECTED MUST BE PROPERLY BARRICADED WITH FENCING AND PROTECTED THROUGHOUT CONSTRUCTION TO INSURE THAT NO CLEARING AND GRADING OR STAGING OF MATERIALS WILL OCCUR IN THOSE AREAS. [18-458]
7. REGULATED AND SIGNIFICANT TREES IN THE STREET YARD [18-456(D)] AND ANY TREES IN ANY REQUIRED BUFFERS [18-456(B)] ARE REQUIRED TO BE RETAINED. TREE PROTECTION FENCING SHOWN ON PLANS DELINEATES TREES TO BE RETAINED.

Start Node	Invert (Upstream) (ft)	Stop Node	Invert (Downstream)	Material	Diameter (in)	Length (ft)	Slope (%)	Elevation Ground (Start)	Elevation Ground (Stop)	Cover (Start) (ft)	Cover (Stop) (ft)
CB-8	22.28	CB-7	18.71	RCP	15	44	8.10%	26.50	24.70	2.97	4.74
CB-7	18.71	DI-6	18.42	RCP	15	58	0.50%	24.70	24.05	4.74	4.38
CB-9	18.74	DI-6	18.42	RCP	15	64	0.50%	22.57	24.05	2.58	4.38
DI-6	18.42	DI-5	18.11	RCP	15	62	0.50%	24.05	24.50	4.38	5.14
DI-5	18.11	CB-4	17.69	RCP	15	60	0.70%	24.50	24.30	5.14	5.36
CB-12	18.20	CB-10	17.99	RCP	15	42	0.50%	20.85	22.50	1.40	3.26
CB-11	18.31	CB-10	17.99	RCP	15	64	0.50%	21.38	22.50	1.82	3.26
CB-10	17.99	CB-4	17.69	RCP	15	60	0.50%	22.50	24.30	3.26	5.36
CB-4	17.69	CB-3	17.34	RCP	24	71	0.50%	24.30	25.05	4.61	5.71
CB-3	17.34	MH-2	16.07	RCP	24	252	0.50%	25.05	20.90	5.71	2.83
MH-2	16.07	MH-1	15.24	RCP	24	168	0.50%	20.90	21.30	2.83	4.06
MH-1	15.24	OF-A	15.00	RCP	24	42	0.50%	21.30	15.00	4.06	0.00
CB-28	22.70	CB-27	22.22	RCP	15	97	0.50%	26.54	27.96	2.59	4.49
CB-27	22.22	CB-26	21.81	RCP	15	82	0.50%	27.96	27.53	4.49	4.47
CB-26	21.81	CB-25	20.75	RCP	18	107	1.00%	27.53	26.92	4.22	4.67
CB-25	20.75	CB-24	20.50	RCP	18	28	0.90%	26.92	27.05	4.67	5.05
CB-24	18.78	CB-23	18.51	RCP	18	27	1.00%	27.05	27.00	6.77	6.99
CB-23	18.51	OF-C	18.00	RCP	18	33	1.50%	27.00	18.00	6.99	0.00
DI-20	21.92	DI-19	20.94	RCP	15	140	0.70%	24.90	24.90	1.73	2.71
DI-19	20.94	CB-18	20.39	RCP	24	68	0.80%	24.90	26.20	1.96	3.81
CB-18	20.39	CB-17	19.78	RCP	24	77	0.80%	26.20	26.16	3.81	4.38
CB-17	19.78	CB-16	19.56	RCP	24	27	0.80%	26.16	25.90	4.38	4.34
CB-16	19.56	DI-15	19.14	RCP	24	60	0.70%	25.90	25.50	4.34	4.36
DI-15	19.14	CB-14	18.63	RCP	24	58	0.90%	25.50	25.12	4.36	4.49
CB-14	18.63	CB-13	18.14	RCP	24	55	0.90%	25.12	25.42	4.49	5.28
CB-22	19.08	CB-21	18.90	RCP	15	25	0.70%	25.50	25.42	5.17	5.27
CB-21	18.90	CB-14	18.63	RCP	15	55	0.50%	25.42	25.12	5.27	5.24
CB-13	18.14	OF-B	18.00	RCP	24	20	0.70%	25.42	18.00	5.28	0.00
EX-CB	14.75	YI-29	14.25	RCP	18	11	4.50%	20.67	19.66	4.42	3.91
YI-29	14.25	OF-D	13.50	RCP	48	142	0.50%	19.66	18.91	1.41	1.00

NHRMC OUTPATIENT CARDIOLOGY CENTER

1415 PHYSICIANS DRIVE
WILMINGTON NC, 28402

LS3P ASSOCIATES LTD.
2528 INDEPENDENCE BLVD. SUITE 200
WILMINGTON, NORTH CAROLINA 28412
TEL. 910.790.9901 FAX 910.790.3111
WWW.LS3P.COM

NORTH CAROLINA REGISTERED LANDSCAPE ARCHITECT SEAL 025503 RICHARD A. MOORE 6/17/13

REVISIONS:

No.	Description	Date
0	DESIGN DEVELOPMENT	02/27/2013
1	TRC COMMENT REVISIONS	04/17/2013
2	TRC COMMENT REVISIONS	06/13/2013

PROJECT: 04853-0015
DATE: 11 JUNE 2013
DRAWN BY: EEM
CHECKED BY: RAM

GRADING & STORM DRAINAGE PLAN

CG-101

SOLUTIONS THROUGH LISTENING
SERVICE BY DESIGN
DESIGN DEVELOPMENT

CANTERWOOD DRIVE
60' PUBLIC R/W

NORTH

30' 0 30' 60'
SCALE: 1"=30' (Horiz.)

SITE
CAROLINA BEACH ROAD
CENTER DR.
MEDICAL
PHYSICIANS DR.
SOUTH 17th STREET
SHIPYARD ROAD

1415 PHYSICIANS DRIVE
WILMINGTON NC, 28402

VICINITY MAP
1" = 1000'

RIM=16.85'
℄ INV=9.06'
95LF 8"RCP± @ 0.34%
RIM=17.21'
℄ INV=9.38'
142LF 8"RCP± @0.37%
RIM=17.74'
℄ INV=9.91'
130LF 8"RCP± @ 0.46%
RIM=16.29'
℄ INV=10.51'
126LF 8"RCP± @ 0.55%
RIM=16.63'
℄ INV=11.20'
115LF 8"RCP @2.69%
RIM=24.25'
℄ INV=14.29'
8"RCP±

EXISTING POND

40' WIDE PUBLIC DRAINAGE EASEMENT

2" TEMPORARY BLOW OFF ASSEMBLIES (FOR FUTURE PRIVATE CONNECTION)

OUTPATIENT CARDIOLOGY CENTER 62,256 SF FFE = 27.0'

HOSPITALITY HOUSE 17,000 SF FFE = 29.0'

DUMPSTER LOCATION

EXISTING POND

1200 GALLON GREASE TRAP

REMOTE FDC 5" STORZ CONNECTION

CLEANOUT INV=25.00'

CLEANOUT INV=25.07'

FIRE HYDRANT #2 (PRIVATE)

UTILITY STUB (TYP.)

FIRE HYDRANT #3 8"x 6" MJ TEE 6" DIP & 6" GV (PRIVATE)

6" PVC CLASS 150 DR18 PRIVATE SANITARY SEWER @ 0.65%

CLEANOUT INV=24.47'

INVERT=23.98'

EX. FIRE HYDRANT

RELOCATED LIGHT POLE

363LF 8"PVC @ 0.69%

REMOTE FDC 5" STORZ CONNECTION

CLEANOUT INV=17.38'

MANHOLE INV=17.29'

CLEANOUT INV=16.75'

FIRE HYDRANT #1 8"x 6" MJ TEE 6" DIP & 6" GV (PRIVATE)

8" C900 PVC PRIVATE FIRE SUPPLY WATERLINE

3" WATER METER

PRIVATE

PUBLIC

CLEANOUT INV=16.26'

CLEANOUT INV=15.95'

6" PVC CLASS 150 DR18 PRIVATE SANITARY SEWER @ 0.65%

CLEANOUT INV=15.46'

RELOCATED LIGHT POLE

(1) 8"x4" TEE (DOMESTIC)
(1) 8"x8" TEE (FIRE LINE)

CONNECT TO EXISTING 8" WATERMAIN

EX. FIRE HYDRANT

8" RPZ IN ENCLOSURE (FIRE)
4" RPZ IN ENCLOSURE (DOMESTIC)

EXISTING 8" DIP CFPUA PUBLIC WATER MAIN

INVERT=14.97'

EX. FIRE HYDRANT

RIM=29.50'
IN=21.23'
OUT=15.05'

RIM=32.24'
℄ INV=24.20"

185LF 8"PVC @ 0.48%

RIM=32.85'
IN(N)=23.85'
℄ INV=23.31'

245LF 8"DIP @ 0.28%

244LF 8"PVC @ 0.39%

RIM=33.56'
IN(S)=22.94'
℄ INV=22.19'

CALL NC ONE CALL BEFORE YOU DIG
STOP
1-800-632-4949
AVOID UTILITY DAMAGE

PHONE# 1-800-632-4949

For each open utility cut of City streets, a $325 permit shall be required from the City prior to occupancy and/or project acceptance.

1 inch

Approved Construction Plan

	Name	Date
Planning		
Traffic		
Fire		

STORMWATER MANAGEMENT PLAN
APPROVED
CITY OF WILMINGTON
ENGINEERING DEPARTMENT
DATE _____ PERMIT # _____
SIGNED _____

NHRMC OUTPATIENT CARDIOLOGY CENTER

1415 PHYSICIANS DRIVE
WILMINGTON NC, 28402

LS3P

LS3P ASSOCIATES LTD.
2528 INDEPENDENCE BLVD. SUITE 200
WILMINGTON, NORTH CAROLINA 28412
TEL. 910.790.9901 FAX 910.790.3111
WWW.LS3P.COM

NORTH CAROLINA REGISTERED LANDSCAPE ARCHITECT
SEAL 025503
ENGINEER
RICHARD A. MOORE

REVISIONS:

No.	Description	Date
0	DESIGN DEVELOPMENT	02/27/2013
1	TRC COMMENT REVISIONS	04/17/2013
2	TRC COMMENT REVISIONS	06/13/2013

PROJECT: 04853-0015
DATE: 11 JUNE 2013
DRAWN BY: EEM
CHECKED BY: RAM

UTILITY PLAN

CU-101

SOLUTIONS THROUGH LISTENING
SERVICE BY DESIGN
DESIGN DEVELOPMENT

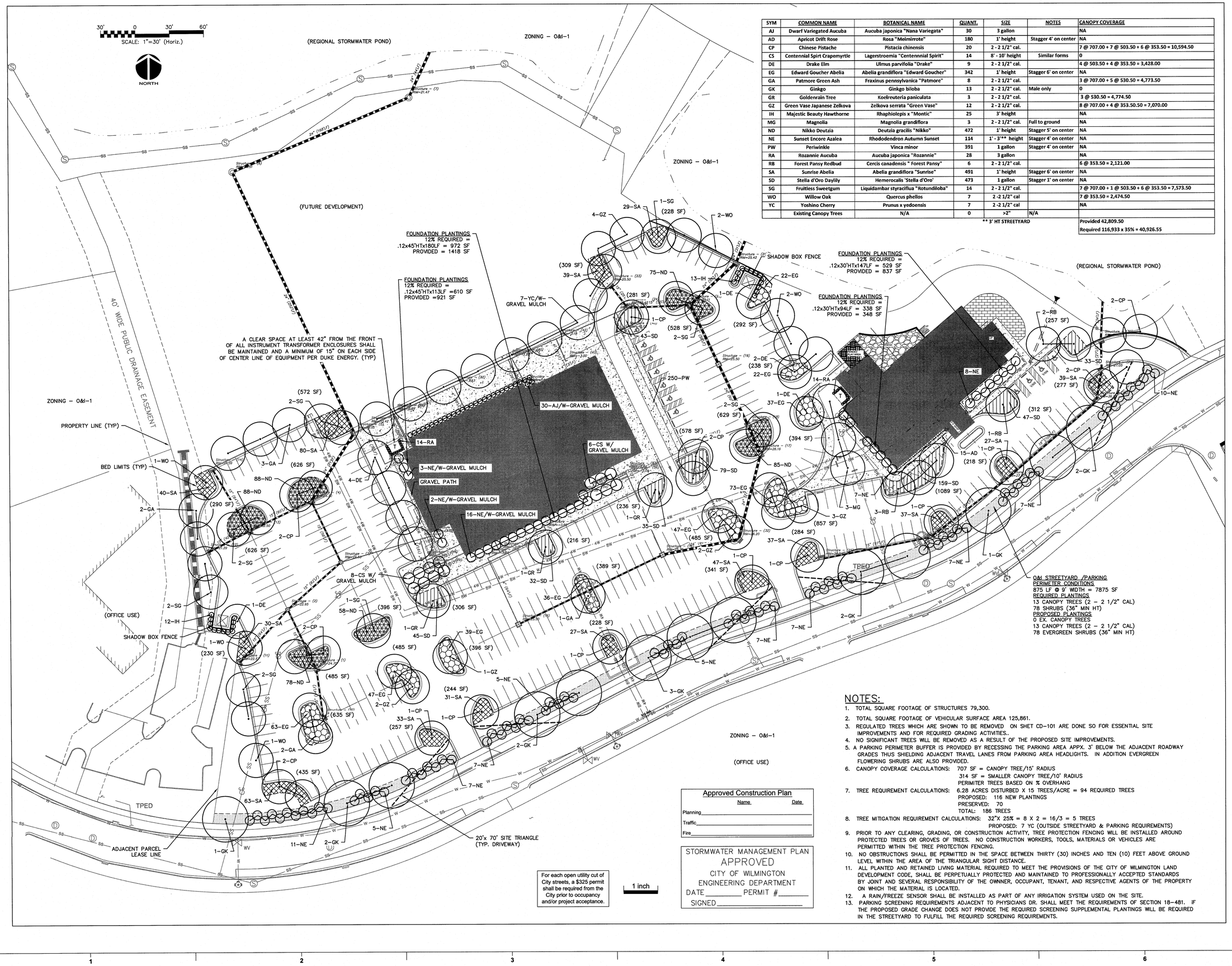

SYM	COMMON NAME	BOTANICAL NAME	QUANT.	SIZE	NOTES	CANOPY COVERAGE
AJ	Dwarf Variegated Aucuba	Aucuba japonica "Nana Variegata"	30	3 gallon		NA
AD	Apricot Drift Rose	Rosa "Meimirrote"	180	1' height	Stagger 4' on center	NA
CP	Chinese Pistache	Pistacia chinensis	20	2 - 2 1/2" cal.		7 @ 707.00 + 7 @ 503.50 + 6 @ 353.50 = 10,594.50
CS	Centennial Spirt Crapemyrtle	Lagerstroemia "Centennial Spirit"	14	8' - 10' height	Similar forms	0
DE	Drake Elm	Ulmus parvifolia "Drake"	9	2 - 2 1/2" cal.		4 @ 503.50 + 4 @ 353.50 = 3,428.00
EG	Edward Goucher Abelia	Abelia grandiflora "Edward Goucher"	342	1' height	Stagger 6' on center	NA
GA	Patmore Green Ash	Fraxinus pennsylvanica "Patmore"	8	2 - 2 1/2" cal.		3 @ 707.00 + 5 @ 530.50 = 4,773.50
GK	Ginkgo	Ginkgo biloba	13	2 - 2 1/2" cal.	Male only	0
GR	Goldenrain Tree	Koelreuteria paniculata	3	2 - 2 1/2" cal.		3 @ 530.50 = 4,774.50
GZ	Green Vase Japanese Zelkova	Zelkova serrata "Green Vase"	12	2 - 2 1/2" cal.		8 @ 707.00 + 4 @ 353.50.50 = 7,070.00
IH	Majestic Beauty Hawthorne	Rhaphiolepis x "Montic"	25	3' height		NA
MG	Magnolia	Magnolia grandiflora	3	2 - 2 1/2" cal.	Full to ground	NA
ND	Nikko Deutzia	Deutzia gracilis "Nikko"	472	1' height	Stagger 5' on center	NA
NE	Sunset Encore Azalea	Rhododendron Autumn Sunset	114	1' - 3'** height	Stagger 4' on center	NA
PW	Periwinkle	Vinca minor	391	1 gallon	Stagger 4' on center	NA
RA	Rozannie Aucuba	Aucuba japonica "Rozannie"	28	3 gallon		NA
RB	Forest Pansy Redbud	Cercis canadensis " Forest Pansy"	6	2 - 2 1/2" cal.		6 @ 353.50 = 2,121.00
SA	Sunrise Abelia	Abelia grandiflora "Sunrise"	491	1' height	Stagger 6' on center	NA
SD	Stella d'Oro Daylily	Hemerocalis 'Stella d'Oro'	473	1 gallon	Stagger 1' on center	NA
SG	Fruitless Sweetgum	Liquidambar styraciflua "Rotundiloba"	14	2 - 2 1/2" cal.		7 @ 707.00 + 1 @ 503.50 + 6 @ 353.50 = 7,573.50
WO	Willow Oak	Quercus phellos	7	2 -2 1/2" cal		7 @ 353.50 = 2,474.50
YC	Yoshino Cherry	Prunus x yedoensis	7	2 -2 1/2" cal		NA
	Existing Canopy Trees	N/A	0	>2"	N/A	
				** 3' HT STREETYARD		Provided 42,809.50
						Required 116,933 x 35% = 40,926.55

NOTES:

1. TOTAL SQUARE FOOTAGE OF STRUCTURES 79,300.
2. TOTAL SQUARE FOOTAGE OF VEHICULAR SURFACE AREA 125,861.
3. REGULATED TREES WHICH ARE SHOWN TO BE REMOVED ON SHET CD–101 ARE DONE SO FOR ESSENTIAL SITE IMPROVEMENTS AND FOR REQUIRED GRADING ACTIVITIES..
4. NO SIGNIFICANT TREES WILL BE REMOVED AS A RESULT OF THE PROPOSED SITE IMPROVEMENTS.
5. A PARKING PERIMETER BUFFER IS PROVIDED BY RECESSING THE PARKING AREA APPX. 3' BELOW THE ADJACENT ROADWAY GRADES THUS SHIELDING ADJACENT TRAVEL LANES FROM PARKING AREA HEADLIGHTS. IN ADDITION EVERGREEN FLOWERING SHRUBS ARE ALSO PROVIDED.
6. CANOPY COVERAGE CALCULATIONS: 707 SF = CANOPY TREE/15' RADIUS
   314 SF = SMALLER CANOPY TREE/10' RADIUS
   PERIMITER TREES BASED ON % OVERHANG
7. TREE REQUIREMENT CALCULATIONS: 6.28 ACRES DISTURBED X 15 TREES/ACRE = 94 REQUIRED TREES
   PROPOSED: 116 NEW PLANTINGS
   PRESERVED: 70
   TOTAL: 186 TREES
8. TREE MITIGATION REQUIREMENT CALCULATIONS: 32"X 25% = 8 X 2 = 16/3 = 5 TREES
   PROPOSED: 7 YC (OUTSIDE STREETYARD & PARKING REQUIREMENTS)
9. PRIOR TO ANY CLEARING, GRADING, OR CONSTRUCTION ACTIVITY, TREE PROTECTION FENCING WILL BE INSTALLED AROUND PROTECTED TREES OR GROVES OF TREES. NO CONSTRUCTION WORKERS, TOOLS, MATERIALS OR VEHICLES ARE PERMITTED WITHIN THE TREE PROTECTION FENCING.
10. NO OBSTRUCTIONS SHALL BE PERMITTED IN THE SPACE BETWEEN THIRTY (30) INCHES AND TEN (10) FEET ABOVE GROUND LEVEL WITHIN THE AREA OF THE TRIANGULAR SIGHT DISTANCE.
11. ALL PLANTED AND RETAINED LIVING MATERIAL REQUIRED TO MEET THE PROVISIONS OF THE CITY OF WILMINGTON LAND DEVELOPMENT CODE, SHALL BE PERPETUALLY PROTECTED AND MAINTAINED TO PROFESSIONALLY ACCEPTED STANDARDS BY JOINT AND SEVERAL RESPONSIBILITY OF THE OWNER, OCCUPANT, TENANT, AND RESPECTIVE AGENTS OF THE PROPERTY ON WHICH THE MATERIAL IS LOCATED.
12. A RAIN/FREEZE SENSOR SHALL BE INSTALLED AS PART OF ANY IRRIGATION SYSTEM USED ON THE SITE.
13. PARKING SCREENING REQUIREMENTS ADJACENT TO PHYSICIANS DR. SHALL MEET THE REQUIREMENTS OF SECTION 18–481. IF THE PROPOSED GRADE CHANGE DOES NOT PROVIDE THE REQUIRED SCREENING SUPPLEMENTAL PLANTINGS WILL BE REQUIRED IN THE STREETYARD TO FULFILL THE REQUIRED SCREENING REQUIREMENTS.

NHRMC OUTPATIENT CARDIOLOGY CENTER

1415 PHYSICIANS DRIVE
WILMINGTON NC, 28402

LS3P ASSOCIATES LTD.
2528 INDEPENDENCE BLVD. SUITE 200
WILMINGTON, NORTH CAROLINA 28412
TEL. 910.790.9901 FAX 910.790.3111
WWW.LS3P.COM

NORTH CAROLINA REGISTERED LANDSCAPE ARCHITECT 559 MARGARET A. GRAY 06/13/13

REVISIONS:

No.	Description	Date
0	DESIGN DEVELOPMENT	02/27/2013
1	TRC COMMENT REVISIONS	04/17/2013
2	TRC COMMENT REVISIONS	06/13/2013

PROJECT: 04853-0015
DATE: 11 JUNE 2013
DRAWN BY: EEM
CHECKED BY: RAM

LANDSCAPE PLAN

CL-101

SOLUTIONS THROUGH LISTENING
SERVICE BY DESIGN

DESIGN DEVELOPMENT

S:\#04853\0015\08-Drawings\CL101_TRC Plan 4853-0015.dwg, 6/13/2013 1:45:15 PM, \\ws6-print-svr\HP _7100

GENERAL CONSTRUCTION NOTES:

1. CONSTRUCTION SHALL BE IN ACCORDANCE WITH THE STANDARDS AND SPECIFICATIONS OF THE CITY OF WILMINGTON, NORTH CAROLINA UNLESS OTHERWISE NOTED.
2. ALL TREES, STUMPS, ROOT MAT, ETC. SHALL BE ENTIRELY REMOVED REGARDLESS OF DEPTH. BURIAL OF ORGANIC MATERIAL WITHIN THE PROJECT LIMITS IS NOT PERMITTED. OPEN BURNING OF DOWNED TREES AND STUMPS IS PERMITTED. HOWEVER, CONTRACTOR IS RESPONSIBLE FOR OBTAINING ALL REQUIRED PERMITS. CHIPPED MATERIALS MUST BE REMOVED PRIOR TO THE PLACEMENT OF EMBANKMENT OR TOPSOIL.
3. THE CONTRACTOR IS SOLELY RESPONSIBLE TO OBTAIN OFF-SITE SPOIL AREAS FOR DISPOSAL OF EXCESS AND/OR UNSUITABLE MATERIALS AS NECESSARY. OFF-SITE SPOIL AREAS MUST BE SUBMITTED TO THE ENGINEER FOR REVIEW AND APPROVAL BY APPLICABLE REGULATORY AGENCIES AND PRIOR TO UTILIZATION BY THE CONTRACTOR. NO AREAS DESIGNATED AS WETLANDS WILL BE PERMITTED FOR USE AS A DISPOSAL SITE. THE CONTRACTOR SHALL SUBMIT DOCUMENTATION TO THE ENGINEER THAT NO WETLANDS WILL BE IMPACTED. THE ENGINEER WILL NOT CONSIDER ANY DELAYS OR MONETARY CLAIMS OF ANY NATURE RESULTING FROM THE CONTRACTOR'S FAILURE OR DIFFICULTY IN FINDING NECESSARY DISPOSAL SITES TO MEET THE TIME FRAMES REQUIRED. THE CONTRACTOR SHALL BE RESPONSIBLE FOR ALL PLANS, PERMITS, EROSION AND SEDIMENT CONTROL MEASURES, ETC. REQUIRED BY THE APPROPRIATE REGULATORY AGENCIES FOR UTILIZING OFF-SITE SPOIL AREAS. THE CONTRACTOR SHALL CERTIFY TO THE ENGINEER THAT ALL REQUIRED PERMITS HAVE BEEN OBTAINED PRIOR TO UTILIZING THE OFF-SITE SPOIL AREAS. ALL COSTS FOR PROCURING AND UTILIZING THE OFF-SITE SPOIL AREAS ARE TO BE INCIDENTAL TO THE BASE BID.
4. APPROVED COVERS TO PREVENT MATERIAL FROM LEAVING THE TRUCKS MUST BE INSTALLED OVER ALL LOADED TRUCKS HAULING BORROW EXCAVATED MATERIAL AND/OR FINE AGGREGATES TO OR FROM THE PROJECT SITES OVER STATE MAINTAINED ROADS. THE TRUCKS SHALL BE FULLY COVERED TO PREVENT MATERIAL FROM LEAVING THE TRUCK DURING HAULING. ANY MATERIALS DELIVERED, TRANSPORTED, OR REMOVED IN UNCOVERED TRUCKS WILL BE INCORPORATED INTO THE PROJECT OR REMOVED FROM THE SITE WITH NO ADDITIONAL PAYMENT TO THE CONTRACTOR FOR FURNISHING, REMOVING, OR PLACING THE MATERIALS INVOLVED.
5. DRIVEWAYS ARE NOT TO BE LOCATED OVER WATER METERS OR SEWER CLEANOUTS, METERS WILL NOT BE SET IF WATER METER BOXES, SEWER CLEAN-OUTS, VALVE BOXES OR OTHER APPURTENANCES ARE DAMAGED OR IMPROPERLY POSITIONED.
6. EXISTING PAVING, CONCRETE, AND OTHER UNSUITABLE MATERIALS SHALL NOT BE USED AS FILL AND SHALL BE DISPOSED OF OUTSIDE THE PROJECT LIMITS AT THE CONTRACTOR'S EXPENSE. CONTRACTOR IS RESPONSIBLE FOR PERMITTING AND FEES FOR DISPOSAL.

GENERAL NOTES

1. IN ACCORDANCE WITH N.C.G.S. 136-44.14, ALL STREET CURBS BEING CONSTRUCTED OR RECONSTRUCTED SHALL PROVIDE WHEELCHAIR RAMPS FOR THE PHYSICALLY HANDICAPPED ON EACH SIDE OF ANY STREET OR ROAD, WHERE CURBS AND SIDEWALKS ARE PROVIDED AND AT OTHER MAJOR POINTS OF PEDESTRIAN FLOW.
2. WHEELCHAIR RAMPS SHALL BE LOCATED AS INDICATED IN DETAIL DRAWINGS; HOWEVER, EXISTING LIGHT POLES, FIRE HYDRANTS, DROP INLETS, ETC. MAY AFFECT PLACEMENT.
3. CURB RAMPS SHALL HAVE DETECTABLE WARNINGS EXTENDING THE FULL WIDTH OF THE RAMP AND A MINIMUM OF 2-FT. IN LENGTH.

CONSTRUCTION NOTES

1. CONSTRUCTION SHALL CONFORM WITH CONSTRUCTION STANDARDS OF THE GOVERNING BODY WHICH HAS JURISDICTION OF THE PARTICULAR STREET.
2. WHEELCHAIR RAMPS SHALL BE CONSTRUCTED OF CLASS "A" CONCRETE WITH THE SURFACE HAVING A ROUGH, NON-SKID TYPE FINISH.
3. A ½-IN. EXPANSION JOINT SHALL BE REQUIRED WHERE THE CONCRETE WHEELCHAIR RAMP JOINS ANY RIGID PAVEMENT OR STRUCTURE.
4. IN NO CASE SHALL THE WIDTH OF A CURB RAMP OR CURB CUT BE LESS THAN 40-IN. (3-FT, 4-IN.), NOT INCLUDING THE FLARED SIDES.
5. TRANSITIONS FROM RAMPS TO WALKS, GUTTERS OR STREETS SHALL BE FLUSH AND FREE OF ABRUPT CHANGES.
6. THE MAXIMUM SLOPE ON THE CURB RAMP RUN IS 1:12.
7. THE MAXIMUM CROSS SLOPE OF THE CURB RAMP IS 1:50.
8. MAXIMUM SLOPES OF ADJOINING GUTTERS, ROAD SURFACE IMMEDIATELY ADJACENT TO THE CURB RAMP, OR ACCESSIBLE ROUTE SHALL NOT EXCEED 1:20.
9. ANY RAISED ISLANDS IN CROSSINGS SHALL BE CUT THROUGH LEVEL WITH THE STREET OR HAVE CURB RAMPS AT BOTH SIDES AND A LEVEL AREA AT LEAST 48-IN. LONG BETWEEN THE CURB RAMPS.
10. DETECTABLE WARNINGS SHALL CONSIST OF RAISED TRUNCATED DOMES WITH A DIAMETER OF NOMINAL 0.9-IN., A HEIGHT OF NOMINAL 0.2-IN. AND A CENTER-TO-CENTER SPACING OF NOMINAL 2.35-IN. AND SHALL CONTRAST VISUALLY WITH ADJOINING SURFACES, EITHER LIGHT-ON-DARK, OR DARK-ON-LIGHT.

ADDITIONAL NOTES

1. STOP BARS SHALL BE USED WHERE IT IS IMPORTANT TO INDICATE THE POINT BEHIND WHICH VEHICLES ARE REQUIRED TO STOP IN COMPLIANCE WITH A TRAFFIC SIGNAL, STOP SIGN OR OTHER LEGAL REQUIREMENT.
2. PARKING SHALL BE ELIMINATED A MINIMUM OF 20 FEET BACK OF THE PEDESTRIAN CROSSWALK.
3. ALL PAVEMENT MARKINGS SHALL BE IN ACCORDANCE WITH THE LATEST EDITION OF THE MANUAL OF UNIFORM TRAFFIC CONTROL DEVICES, PUBLISHED BY THE FEDERAL HIGHWAY ADMINISTRATION. THIS DOCUMENT IS AVAILABLE FROM THE SUPERINTENDENT OF DOCUMENTS, U.S. GOVERNMENT PRINTING OFFICE, WASHINGTON, D.C. 20402.
4. CURB RAMPS AT MARKED CROSSINGS SHALL BE WHOLLY CONTAINED WITHIN THE MARKINGS, EXCLUDING ANY FLARED SIDES.
5. THE BOTTOM OF DIAGONAL (CORNER TYPE) CURB RAMPS AT MARKED CROSSINGS SHALL HAVE 48-IN. MINIMUM CLEAR SPACE WITHIN THE MARKINGS.
6. IF DIAGONAL CURB RAMPS HAVE FLARED SIDES, THEY SHALL HAVE AT LEAST A 24-IN. LONG SEGMENT OF STRAIGHT CURB LOCATED ON EACH SIDE OF THE CURB RAMP AND WITHIN THE MARKED CROSSING.

SD 8-09

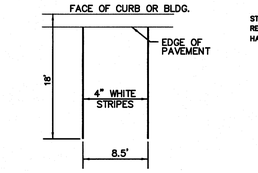

TYPICAL PARKING STALL

NOT TO SCALE

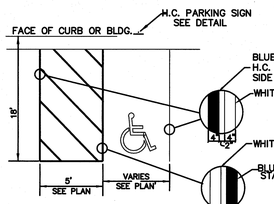

HANDICAPPED PARKING STALL

NOT TO SCALE

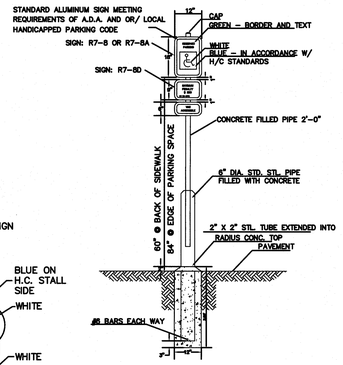

HANDICAP PARKING SIGN

NOT TO SCALE

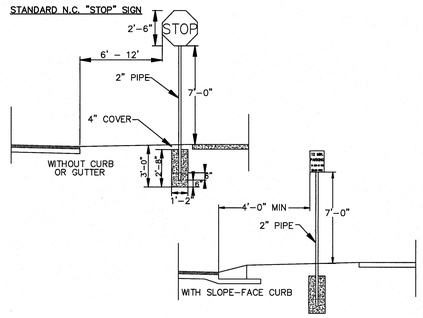

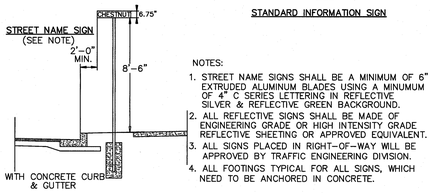

STANDARD INFORMATION SIGN

NOTES:
1. STREET NAME SIGNS SHALL BE A MINIMUM OF 6" EXTRUDED ALUMINUM BLADES USING A MINUMUM OF 4" C SERIES LETTERING IN REFLECTIVE SILVER & REFLECTIVE GREEN BACKGROUND.
2. ALL REFLECTIVE SIGNS SHALL BE MADE OF ENGINEERING GRADE OR HIGH INTENSITY GRADE REFLECTIVE SHEETING OR APPROVED EQUIVALENT.
3. ALL SIGNS PLACED IN RIGHT-OF-WAY WILL BE APPROVED BY TRAFFIC ENGINEERING DIVISION.
4. ALL FOOTINGS TYPICAL FOR ALL SIGNS, WHICH NEED TO BE ANCHORED IN CONCRETE.

STANDARD SIGN INSTALLATION LOCATION
SD 15-03

NOT TO SCALE

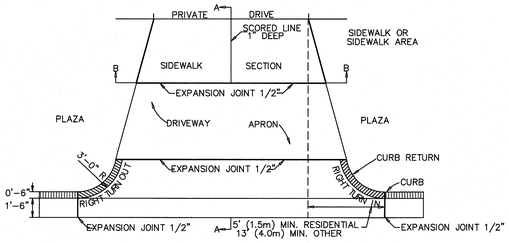

PAVEMENT PLAN

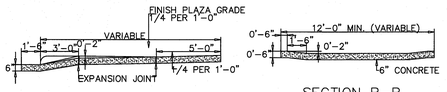

SECTION A-A

SECTION B-B

STANDARD DRIVEWAY DETAIL
SD 8-02
NOT TO SCALE

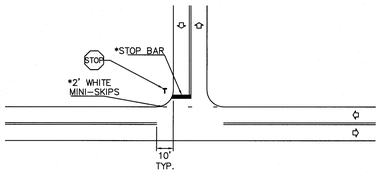

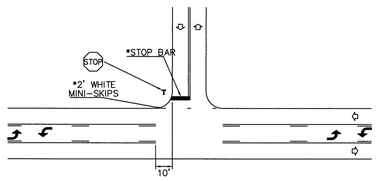

PAVEMENT MARKINGS
NON-SIGNALIZED INTERSECTIONS
SD 11-04

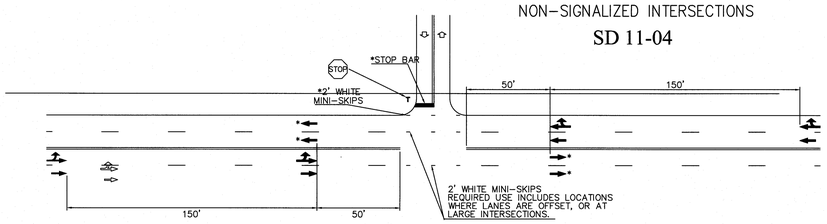

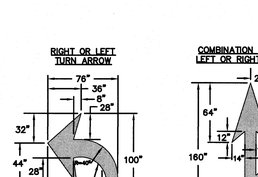

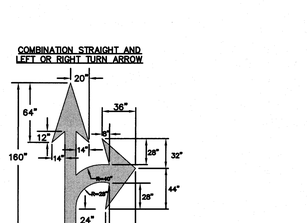

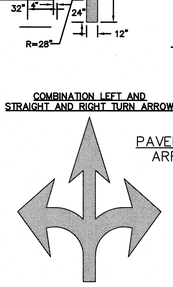

PAVEMENT MARKINGS
ARROW SYMBOLS
SD 11-03

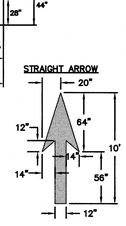

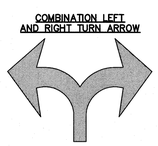

GENERAL NOTES

-ALL PAVEMENT MARKING SYMBOLS SHALL BE WHITE IN COLOR
-PAVEMENT MARKING SYMBOLS SHALL NOT BE LOCATED AS TO CONFLICT WITH EXPANSION JOINTS.
-ON PORTLAND CEMENT CONCRETE PAVEMENTS, PAVEMENT MARKING SYMBOLS SHALL NOT BE PLACED ACROSS TRANSVERSE EXPANSION JOINTS UNLESS APPROVED BY THE ENGINEER.

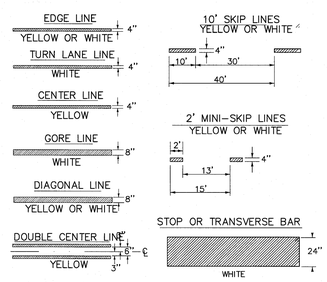

PAVEMENT MARKING DETAIL

NOT TO SCALE

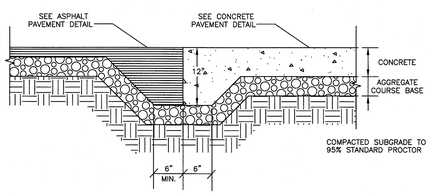

ASPHALT TO CONCRETE TRANSITION

NOT TO SCALE

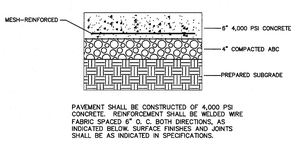

PAVEMENT SHALL BE CONSTRUCTED OF 4,000 PSI CONCRETE. REINFORCEMENT SHALL BE WELDED WIRE FABRIC SPACED 6" O. C. BOTH DIRECTIONS, AS INDICATED BELOW. SURFACE FINISHES AND JOINTS SHALL BE AS INDICATED IN SPECIFICATIONS.

CONCRETE PAVEMENT SECTION
(DUMPSTER PAD)

NOT TO SCALE

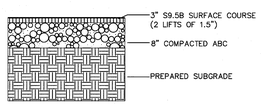

ASPHALT PAVEMENT SECTION
(HEAVY DUTY PAVEMENT)

NOT TO SCALE

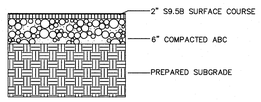

ASPHALT PAVEMENT SECTION
(LIGHT DUTY PAVEMENT)

NOT TO SCALE

LEGEND

- DIRECTION OF TRAFFIC FLOW
- PAVEMENT MARKING SYMBOLS
- * OPTIONAL

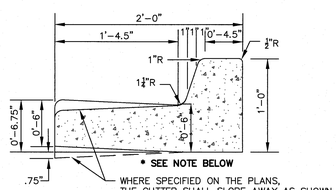

*NOTE: 6" OF COMPACTED ABC (SEE NOTE) SHALL BE PLACED BELOW CURB AND GUTTER ON THE "PUBLIC STREETS" ONLY. FURTHER, THE 6" ABC DEPTH SHALL BE EXTENDED 12" BEHIND THE BACK OF CURB PER CITY STD SD 1-02.

STANDARD CURB SECTION TYPE "A"
SD 7-01
NOT TO SCALE

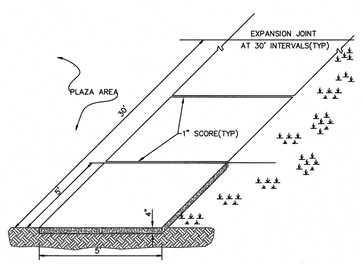

STANDARD SIDEWALK DETAIL
SD 8-15
NOT TO SCALE

Approved Construction Plan

Name Date

Planning _____

Traffic _____

Fire _____

STORMWATER MANAGEMENT PLAN
APPROVED
CITY OF WILMINGTON
ENGINEERING DEPARTMENT
DATE _____ PERMIT # _____
SIGNED _____

For each open utility cut of City streets, a $325 permit shall be required from the City prior to occupancy and/or project acceptance.

1 inch

REVISIONS:

No.	Description	Date
0	DESIGN DEVELOPMENT	02/27/2013
1	TRC COMMENT REVISIONS	04/17/2013
2	TRC COMMENT REVISIONS	06/13/2013

PROJECT: 04853-0015
DATE: 11 JUNE 2013
DRAWN BY: EEM
CHECKED BY: RAM

SITE DETAILS

CS-501

SOLUTIONS THROUGH LISTENING

SERVICE BY DESIGN

DESIGN DEVELOPMENT

NHRMC OUTPATIENT CARDIOLOGY CENTER

1415 PHYSICIANS DRIVE
WILMINGTON NC, 28402

LS3P ASSOCIATES LTD.
2528 INDEPENDENCE BLVD. SUITE 200
WILMINGTON, NORTH CAROLINA 28412
TEL. 910.790.9901 FAX 910.790.3111
WWW.LS3P.COM

NORTH CAROLINA REGISTERED LANDSCAPE ARCHITECT SEAL 025503 ENGINEERING RICHARD A. MACKEE 6/13/13

S:\48530015\BD-Drawings\Details_48530015.dwg, 6/13/2013 2:44:30 PM, \\wil-print-svr\KIP_7100

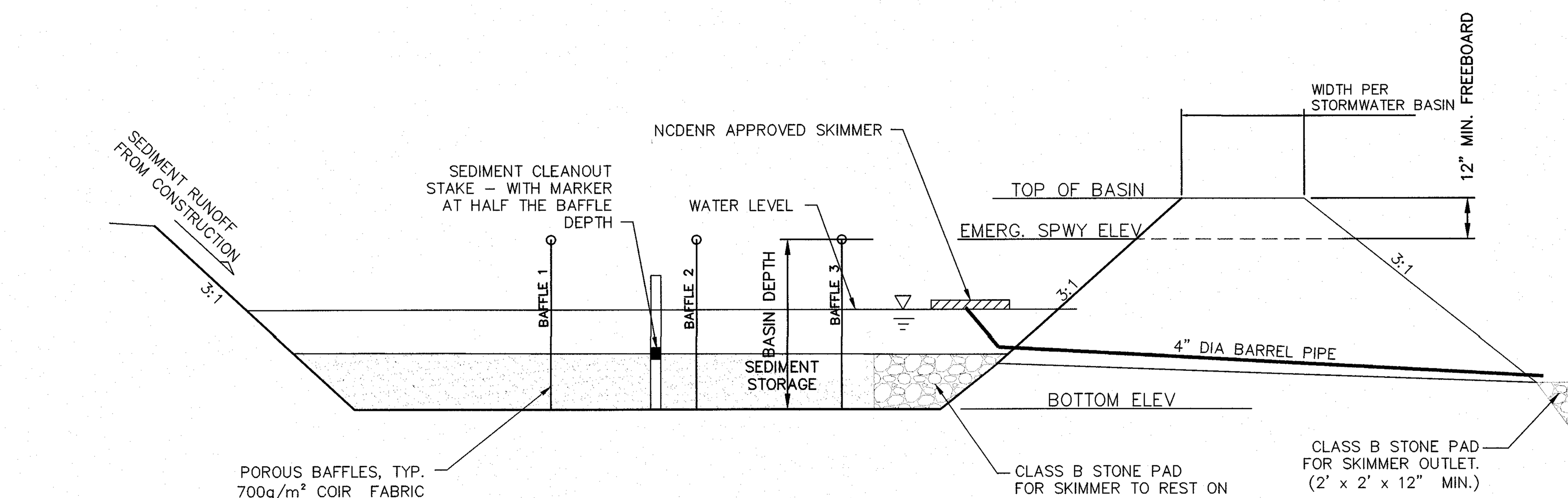

CROSS SECTION

SKIMMER BASIN

NOT TO SCALE

NOTES
1. LOCATE THE EMERGENCY SPILLWAY ON NATURAL SOILS. AVOID PLACING IT THROUGH FILL MATERIAL WHEREVER POSSIBLE.
2. ALL RUNOFF MUST DISCHARGE TO THE INLET SIDE OF THE BASIN. DISCHARGE RUNOFF INTO THE BASIN IN A MANNER THAT MINIMIZES EROSION.

NOTES:
1. SB #1 SKIMMER SIZE = 1.5" DIA.
2. SB #2 SKIMMER SIZE = 2.0" DIA.
3. ORIFICE SIZES ARE FOR THE FAIRCLOTH SKIMMER. IF ANOTHER TYPE OF SKIMMER IS USED THE DEVICE MUST BE ABLE TO DRAIN THE BASIN WITHIN 72 HOURS.

SKIMMER BASIN CALCULATION TABLE

Skimmer No.	Drainage Area ac	Rational C Runoff Coeff.	Time of Conc. Tc min	I10 Intensity in/hr	Q10 Peak Flow cfs	Required SA (325 x Q10) sf	Provided SA sf	Required Vol (1800cf/ac x DA) cf	Basin Depth D ft	Provided Vol Basin Depth cf	Weir Width ft
SB-1	1.29	0.35	5.00	7.23	3.26	1,061	1,250	2,322	4.00	2,846	10.0
SB-2	3.40	0.25	5.00	7.23	6.15	1,997	2,312	6,120	4.00	6,230	10.0

FAIRCLOTH SKIMMER SIZE CALCULATION - PHASE 1

Skimmer No.	Dewatering Time (days)	Skimmer Outflow cf/day	Skimmer Size in	Orifice Diameter in	Orifice Radius in	Barrel Outflow gpm	Barrel Pipe in
SB-1	3	949	1.5	0.9	0.5	4.9	4.0
SB-2	3	2,077	2.0	1.2	0.6	10.8	4.0

Faircloth Skimmer Selection Table

Skimmer Size in	Outflow Qmax cf/day	Head ft
1.5	1,728	0.125
2	3,283	0.167
2.5	6,234	0.208
3	9,774	0.250
4	20,109	0.333
5	32,832	0.333
6	51,840	0.417
8	97,978	0.500

NOTES:
1. Q10 Peak Flow were taken from Rational Method.
2. Required Surface Areas and Volumes were taken from NCDENR Sediment & Erosion Manual.
3. Faircloth Skimmer Selection Table taken from Table 4-2. NCDOT Level III-A Design of Sediment & Erosion Control Plans Manual

SKIMMER DETAIL

NOT TO SCALE

NOTE
STRUCTURAL STONE SHALL BE (CLASS "B") STONE FOR EROSION CONTROL PURPOSES. SEDIMENT CONTROL STONE SHALL BE NO. 5 OR NO. 57 STONE.

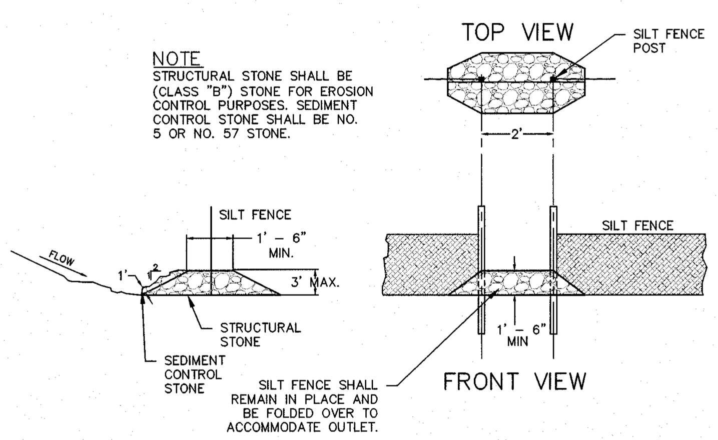

SILT FENCE STONE OUTLET

NOT TO SCALE

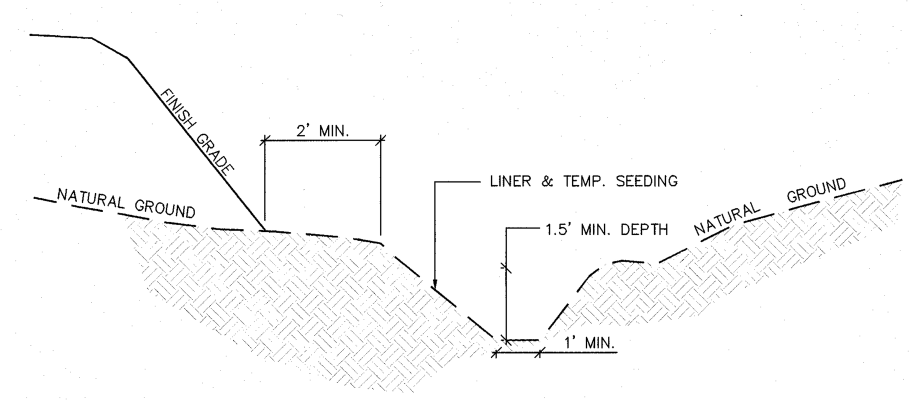

TEMPORARY PERIMETER DIKE

NOT TO SCALE

Temporary Perimeter Dike Calculations

Perm Dike NUMBER	LENGTH (FT)	HIGH (FT)	LOW (FT)	ELEVATION DIFF. (FT)	SLOPE (%)	VELOCITY (FPS)	LINING	Manning n	CHECK DAM SPACING (FT)	NUMBER REQUIRED	NUMBER PROVIDED
									TEMPORARY ROCK CHECK DAMS		
TPD 1	354	25.00	16.00	9.00	2.54	0.31	GRASS	0.035	79	5	6

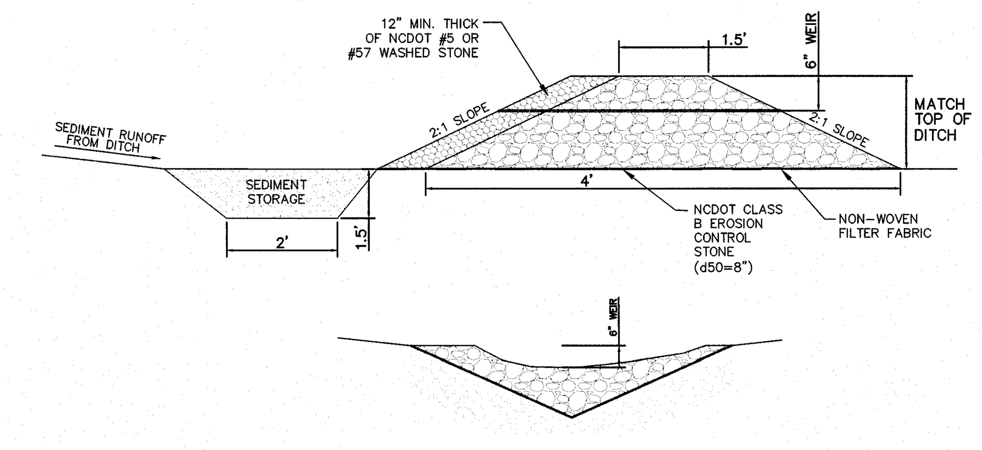

STONE SECTION WITH A WEIR

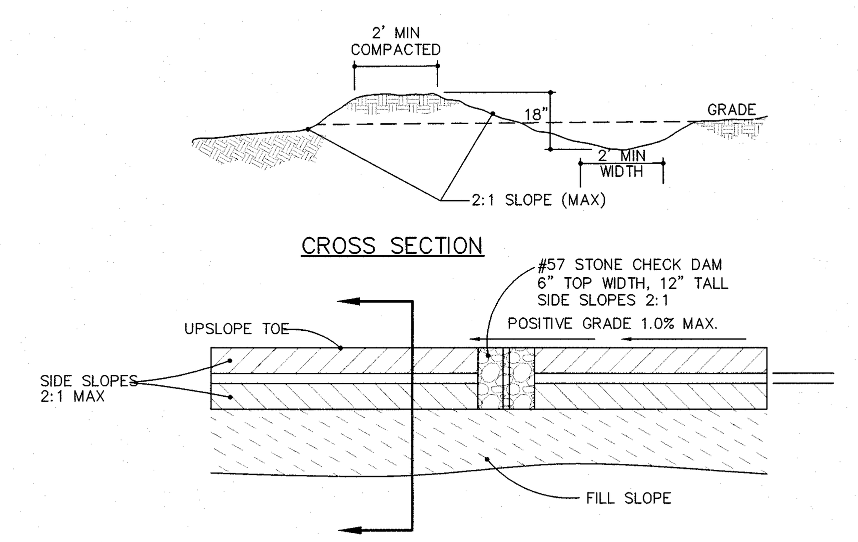

– STABILIZE DIVERSION DITCH WITH TEMPORARY SEEDING AND EROSION CONTROL NETTING

TEMPORARY DIVERSION DITCH

NOT TO SCALE

Temporary Diversion Ditch Calculations

TDD NUMBER	LENGTH (FT)	HIGH (FT)	LOW (FT)	ELEVATION DIFF. (FT)	SLOPE (%)	MANNING n	VELOCITY (FPS)	LINING
TDD1	206	31.00	27.00	4.00	1.94	0.020	0.59	BARE EARTH
TDD2	92	28.00	27.00	1.00	1.09	0.020	0.17	BARE EARTH
TDD3	387	27.00	20.00	7.00	1.81	0.020	1.12	BARE EARTH
TDD4	311	28.50	20.00	8.50	2.73	0.020	0.90	BARE EARTH

TEMPORARY ROCK CHECK DAMS

TDD NUMBER	DA (AC)	DEPTH (IN)	FLOW DEPTH (IN)	SIDE SLOPES H:V	SLOPE (%)	MANNING n	VELOCITY (FPS)	LINING	CHECK DAM SPACING (FT)	NUMBER REQUIRED	NUMBER PROVIDED
TDD1	1.00	18	12	3	1.94	0.035	0.59	GRASS	103	2	2
TDD2	0.29	18	12	3	1.09	0.035	0.17	GRASS	184	1	1
TDD3	1.89	18	12	3	1.81	1.035	1.12	GRASS	111	4	4
TDD4	1.51	18	12	3	2.73	2.035	0.90	GRASS	73	4	4

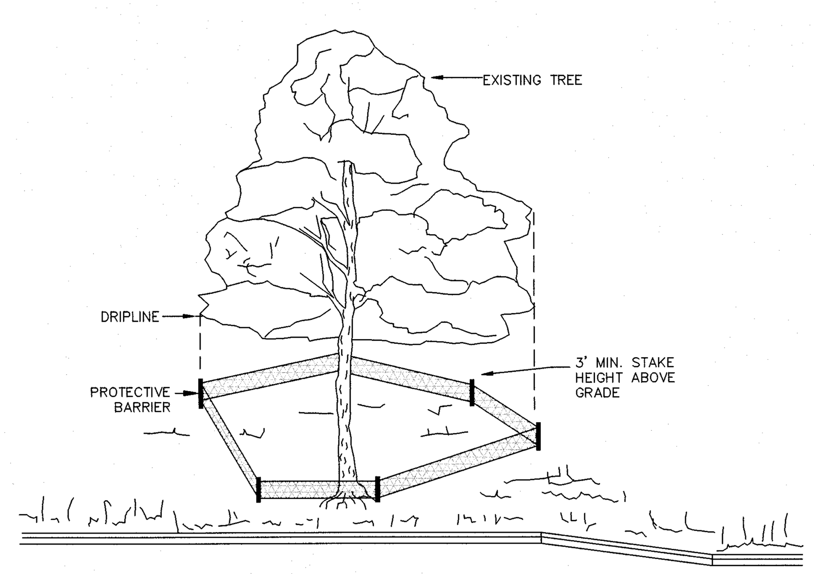

NOTE
TREES TO BE SAVED WILL BE CLEARLY MARKED PRIOR TO CONSTRUCTION AND A PROTECTIVE BARRIER IS TO BE INSTALLED AT THE DRIPLINE. DRIP LINE – THE AREA OF SOIL DIRECTLY BENEATH THE TREE EXTENDING OUT TO THE TIPS OF THE OUTERMOST BRANCHES.

METHOD OF TREE PROTECTION DURING CONSTRUCTION

SD 15–08

NOT TO SCALE

TREE PROTECTION NOTES:

1. NO LAND DISTURBANCE INCLUDING TREE REMOVAL IS TO OCCUR OUTSIDE THE LIMITS OF DISTURBANCE SHOWN ON THE PLANS. [18–457(b)]
2. PROTECTIVE FENCING IS TO BE PROPERLY MAINTAINED THROUGHOUT THE DURATION OF THE PROJECT. [18–458]
3. LAND CLEARING AND CONSTRUCTION CONTRACTORS SHALL RECEIVE ADEQUATE INSTRUCTION ON TREE PROTECTION REQUIREMENTS AND METHODS. [18–457(d)]
4. ANY TREES AND/OR AREAS DESIGNATED TO BE PROTECTED MUST PROPERLY BARRICADED WITH FENCING AND PROTECTED THROUGHOUT CONSTRUCTION TO INSURE THAT NO CLEARING AND GRADING OR STAGING OF MATERIALS WILL OCCUR IN THOSE AREAS. [18–458]
5. NO EQUIPMENT IS ALLOWED ON THE SITE UNTIL ALL TREE PROTECTION FENCING AND SILT FENCING HAS BEEN INSTALLED AND APPROVED. [18–458]
6. REGULATED AND SIGNIFICANT TREES IN THE STREET YARD [18–456(c)] AND ANY TREES IN ANY REQUIRED BUFFERS [18–456(b)] ARE REQUIRED TO BE RETAINED.

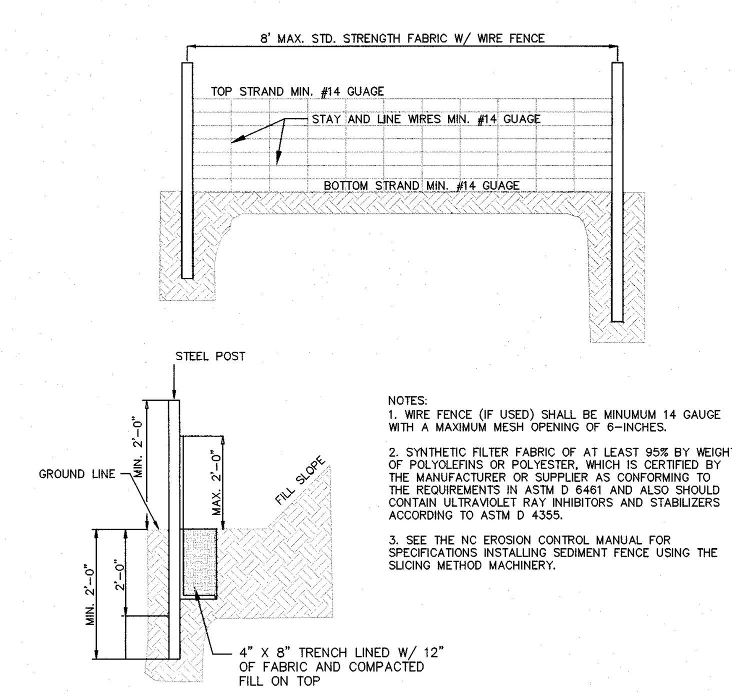

NOTES:
1. WIRE FENCE (IF USED) SHALL BE MINUMUM 14 GAUGE WITH A MAXIMUM MESH OPENING OF 6–INCHES.
2. SYNTHETIC FILTER FABRIC OF AT LEAST 95% BY WEIGHT OF POLYOLEFINS OR POLYESTER, WHICH IS CERTIFIED BY THE MANUFACTURER OR SUPPLIER AS CONFORMING TO THE REQUIREMENTS IN ASTM D 6461 AND ALSO SHOULD CONTAIN ULTRAVIOLET RAY INHIBITORS AND STABILIZERS ACCORDING TO ASTM D 4355.
3. SEE THE NC EROSION CONTROL MANUAL FOR SPECIFICATIONS INSTALLING SEDIMENT FENCE USING THE SLICING METHOD MACHINERY.

TEMPORARY SILT FENCE

NOT TO SCALE

Silt Fence Table

SILT FENCE	DRAINAGE AREA (AC)	LENGTH (LF)	AC per 100 LF	1/4-AC per 100 LF "yes" or no"
SF 1	0.93	378	0.25	yes
SF 2	0.24	241	0.10	yes
SF 3	0.64	474	0.14	yes
SF 4	0.21	399	0.05	yes

SEEDBED PREPARATION:

1. CHISEL COMPACTED AREAS AND SPREAD TOPSOIL 3 INCHES DEEP OVER ADVERSE SOIL CONDITIONS, IF AVAILABLE.
2. RIP THE ENTRANCE AREA TO 6 INCHES DEPTH.
3. REMOVE ALL LOOSE ROCK, ROOTS, AND OTHER OBSTRUCTIONS LEAVING SURFACE REASONABLY SMOOTH AND UNIFORM.
4. APPLY AGRICULTURAL LIME, FERTILIZER, AND SUPERPHOSPHATE UNIFORMLY AND MIX WITH SOIL (SEE BELOW*).
5. CONTINUE TILLAGE UNTIL A WELL – PULVERIZED, FIRM, REASONABLY UNIFORM SEEDBED IS PREPARED 4 TO 6 INCHES DEEP.
6. SEED ON A FRESHLY PREPARED SEEDBED AND COVER SEED LIGHTLY WITH SEEDING EQUIPMENT OR CULTIPACK AFTER SEEDING.
7. MULCH IMMEDIATELY AFTER SEEDING AND ANCHOR MULCH.
8. INSPECT ALL SEEDED AREAS AND MAKE NECESSARY REPAIRS OR RESEEDINGS WITHIN THE PLANTING SEASON, IF POSSIBLE. IF STAND SHOULD BE OVER 60% DAMAGED, REESTABLISH FOLLOWING ORIGINAL LIME, FERTILIZER AND SEEDING RATES.
9. CONSULT CONSERVATION INSPECTOR ON MAINTENANCE TREATMENT AND FERTILIZATION AFTER PERMANENT COVER IS ESTABLISHED.
10. APPLY:
    AGRICULTURAL LIMESTONE – 2 TONS/ACRE
    FERTILIZER – 1000 LBS/ACRE (10–10–10)
    SUPERPHOSPHATE – 500 LBS/ACRE (20%)
    MULCH – 2 TONS/ACRE (SMALL GRAIN STRAW)
    ANCHOR – ASPHALT EMULSION AT 450 GAL/ACRE

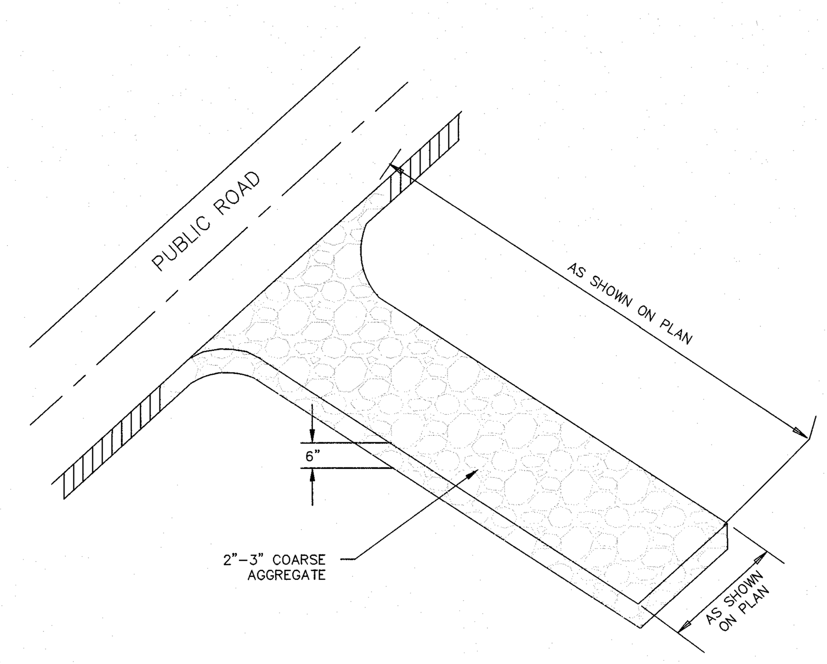

CONSTRUCTION ENTRANCE/EXIT

SD 13–03

NOT TO SCALE

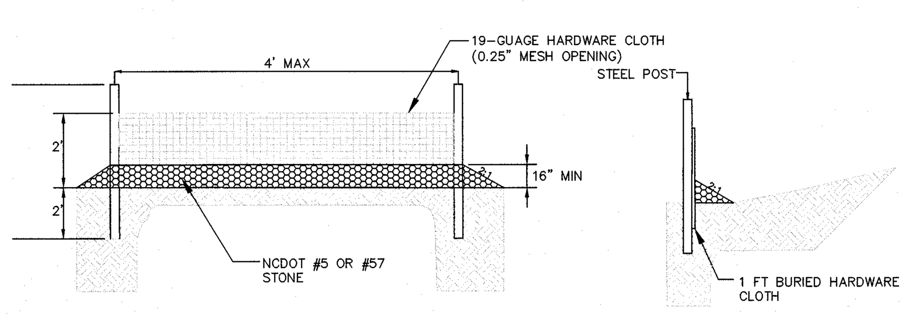

NOTES:
1. DRIVE 5–FOOT STEEL POSTS 2 FEET INTO THE GROUND SURROUNDING THE INLET. SPACE POSTS EVENLY AROUND THE PERIMETER OF THE INLET, A MAXIMUM OF 4 FEET APART.
2. SURROUND THE POSTS WITH WIRE MESH HARDWARE CLOTH. SECURE THE WIRE MESH TO THE STEEL POSTS AT THE TOP, MIDDLE, AND BOTTOM. PLACING A 1–FOOT FLAP OF THE WIRE MESH UNDER THE GRAVEL FOR ANCHORING IS RECOMMENDED.
3. PLACE CLEAN GRAVEL (NC DOT #5 OR #57 STONE) ON A 2:1 SLOPE WITH A HEIGHT OF 16 INCHES AROUND THE WIRE, AND SMOOTH TO AN EVEN GRADE.

GUIDELINES FOR HARDWARE CLOTH & GRAVEL INLET PROTECTION

SD 13–01

NOT TO SCALE

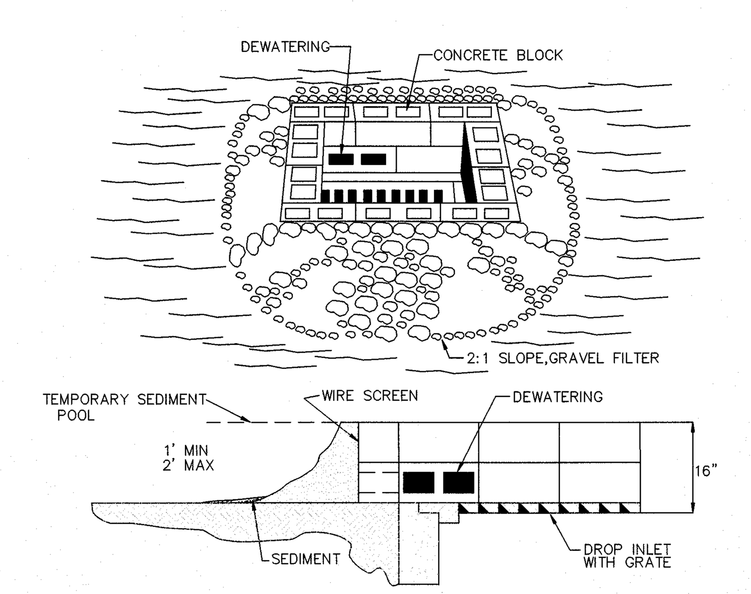

CONSTRUCTION SPECIFICATIONS

1. LAY ONE BLOCK ON EACH SIDE OF THE STRUCTURE ON ITS SIDE IN THE BOTTOM ROW TO ALLOW POOL DRAINAGE. THE FOUNDATION SHOULD BE EXCAVATED AT LEAST 2" BELOW THE CREST OF THE STORM DRAIN. PLACE THE BOTTOM ROW OF BLOCKS AGAINST THE EDGE OF THE STORM DRAIN FOR LATERAL SUPPORT AND TO AVOID WASHOUTS WHEN OVERFLOW OCCURS. IF NEEDED, GIVE LATERAL SUPPORT TO SUBSEQUENT ROWS BY PLACING 2x4 WOOD STUDS THROUGH BLOCK OPENINGS.
2. CAREFULLY FIT HARDWARE CLOTH OR COMPARABLE WIRE MESH WITH 1/2–INCH OPENINGS OVER ALL BLOCK OPENINGS TO HOLD GRAVEL IN PLACE.
3. USE CLEAN GRAVEL, 3/4 TO 1/2–INCH IN DIAMETER, PLACED 2 INCHES BELOW THE TOP OF THE BLOCK ON A 2:1 SLOPE OR FLATTER AND SMOOTH IT TO AN EVEN GRADE. D.O.T #57 WASHED STONE IS RECOMMENDED.

DROP INLET PROTECTION

SD 2–14

NOT TO SCALE

TEMPORARY SEEDING			
GRASS TYPE	AMOUNT/ 1000 S.F.	TIME OF SEEDING	INITIAL
RYE GRAIN	1–2 LBS.	APRIL – JUNE	25 LBS. 10–10–10
BROWNTOP MILLET	1–2 LBS	JUNE – AUGUST	25 LBS 10–10–10

PERMANENT SEEDING			
GRASS TYPE	AMOUNT/ 1000 S.F.	TIME OF SEEDING	INITIAL
BERMUDA, COMMON	1–2 LBS.	APRIL – JUNE	25 LBS. 10–10–10
FESCUE, TALL (KENTUCKY 31)	5–7 LBS	JUNE – AUGUST FEB. – OCT.	25 LBS 10–10–10
SERICEA LESPEDEZA (SLOPES	1–2 LBS	MARCH – APRIL	25 LBS 10–10–10

GROUND STABILIZATION CRITERIA		
SITE AREA DESCRIPTION	STABILIZATION TIMEFRAME	STABILIZATION TIMEFRAME EXCEPTIONS
PERIMETER DIKES, SWALES, DITCHES AND SLOPES	7 DAYS	NONE
HIGH QUALITY WATER ZONES	7 DAYS	NONE
SLOPES STEEPER THAN 3:1	7 DAYS	IF SLOPES ARE 10 FT OR LESS IN IN LENGTH AND ARE NOT STEEPER THAN 2:1, 14 DAYS ARE ALLOWED
SLOPES 3:1 OR FLATTER	14 DAYS	7 DAYS FOR SLOPES GREATER THAN 50 FT IN LENGTH
ALL OTHER AREAS WITH SLOPES FLATTER THAN 4:1	14 DAYS	NONE (EXCEPT FOR PERIMETERS AND HQW ZONES)

Approved Construction Plan	Name	Date
Planning		
Traffic		
Fire		

STORMWATER MANAGEMENT PLAN
APPROVED
CITY OF WILMINGTON
ENGINEERING DEPARTMENT
DATE_________ PERMIT #________
SIGNED_______________________

For each open utility cut of City streets, a $325 permit shall be required from the City prior to occupancy and/or project acceptance.

1 inch

NHRMC OUTPATIENT CARDIOLOGY CENTER

1415 PHYSICIANS DRIVE
WILMINGTON NC, 28402

LS3P

LS3P ASSOCIATES LTD.
2528 INDEPENDENCE BLVD. SUITE 200
WILMINGTON, NORTH CAROLINA 28412
TEL. 910.790.9901 FAX 910.790.3111
WWW.LS3P.COM

NORTH CAROLINA PROFESSIONAL SEAL 025503 ENGINEER RICHARD A. MOORE 6/12/13

REVISIONS:

No.	Description	Date
0	DESIGN DEVELOPMENT	02/27/2013
1	TRC COMMENT REVISIONS	04/17/2013
2	TRC COMMENT REVISIONS	06/13/2013

PROJECT: 04853-0015
DATE: 11 JUNE 2013
DRAWN BY: EEM
CHECKED BY: RAM

SEDIMENT & EROSION CONTROL DETAILS

CE-501

SOLUTIONS THROUGH LISTENING

SERVICE BY DESIGN

DESIGN DEVELOPMENT

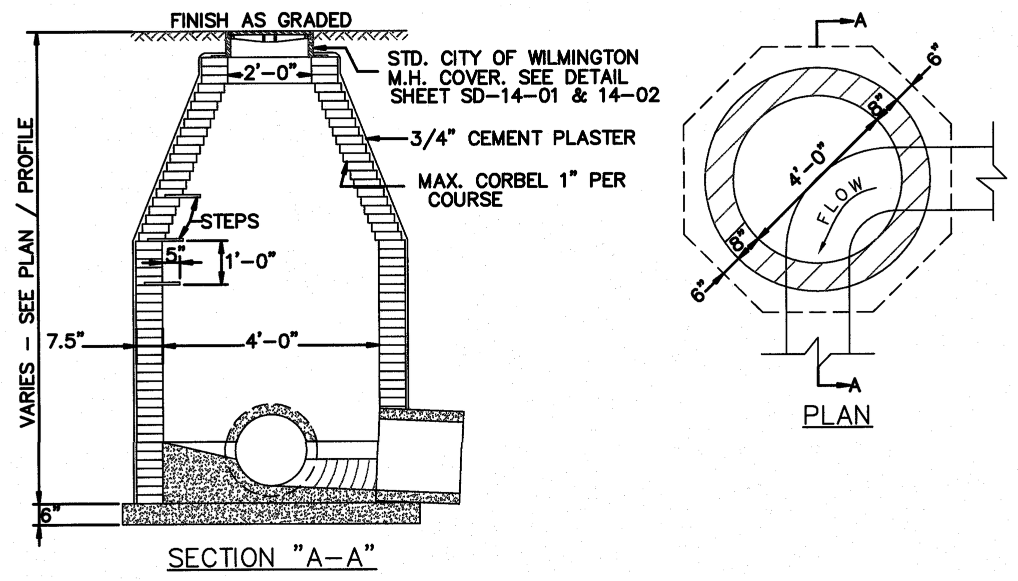

GUIDELINES FOR STORM DRAIN MANHOLE
SD 2 -03
NOT TO SCALE

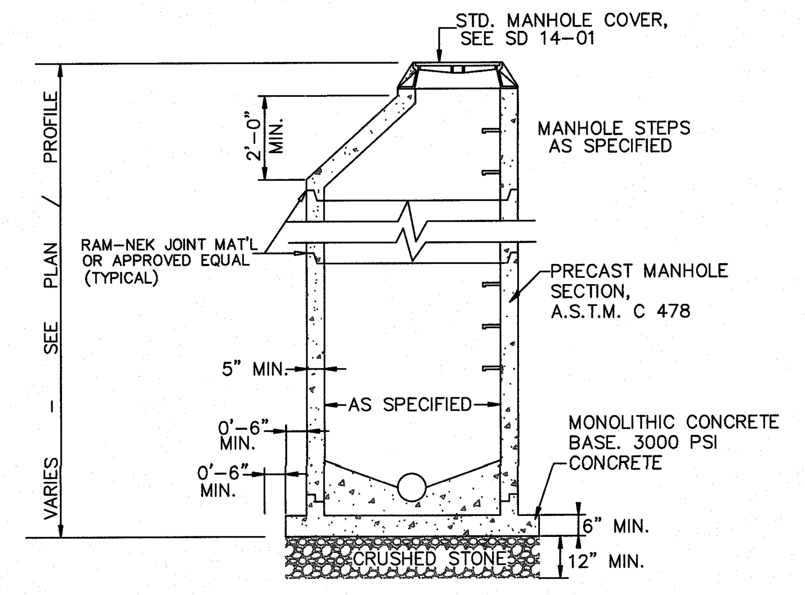

NOTE:
EXTENDED BASE MAY NOT BE REQUIRED WHERE MANHOLES ARE GREATER THAN 4 FEET INSIDE DIAMETER

PRECAST MANHOLE
SD 14-11
NOT TO SCALE

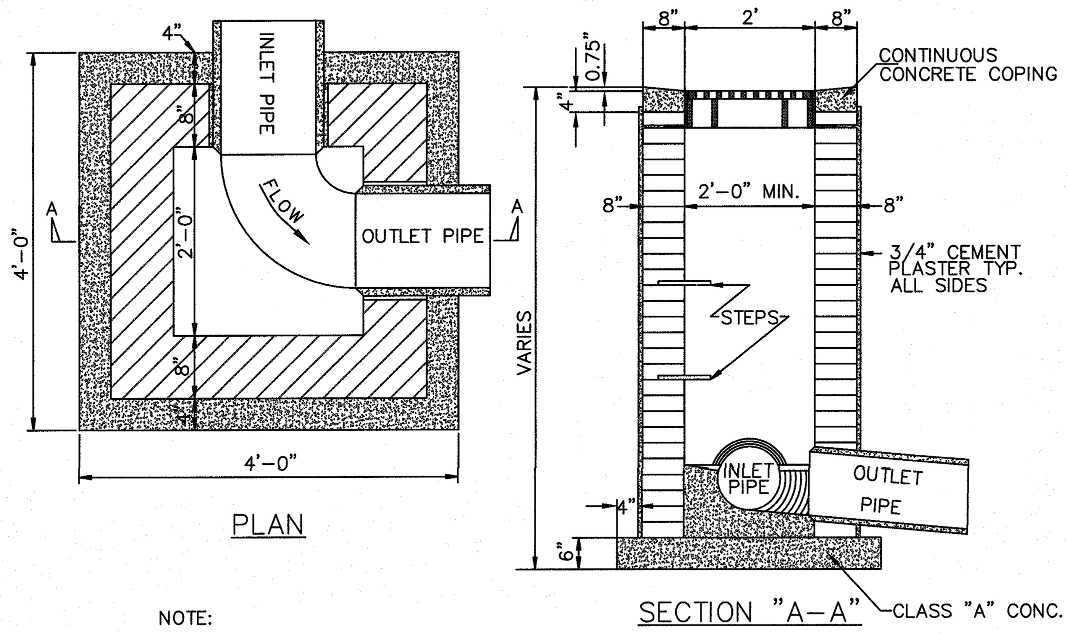

NOTE:
FRAME AND GRATE TO BE STANDARD CITY OF WILMINGTON CAST IRON FRAME AND GRATE PER SD 14-04

GRILL BASIN
SD 2-02
NOT TO SCALE

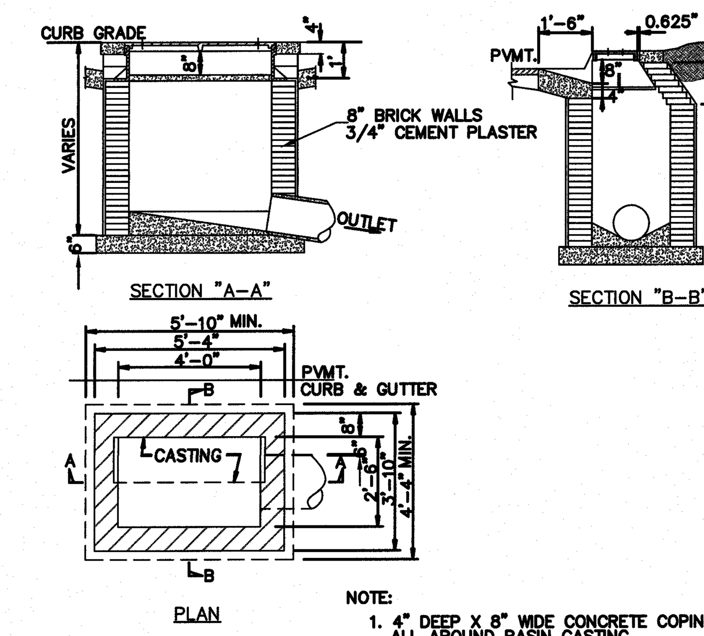

NOTE:
1. 4" DEEP X 8" WIDE CONCRETE COPING ALL AROUND BASIN CASTING.
2. ALL CONCRETE TO BE CLASS "A"
3. FOR CASTING DETAIL SEE SD 2-16

CATCH BASIN
SD 2-01
NOT TO SCALE

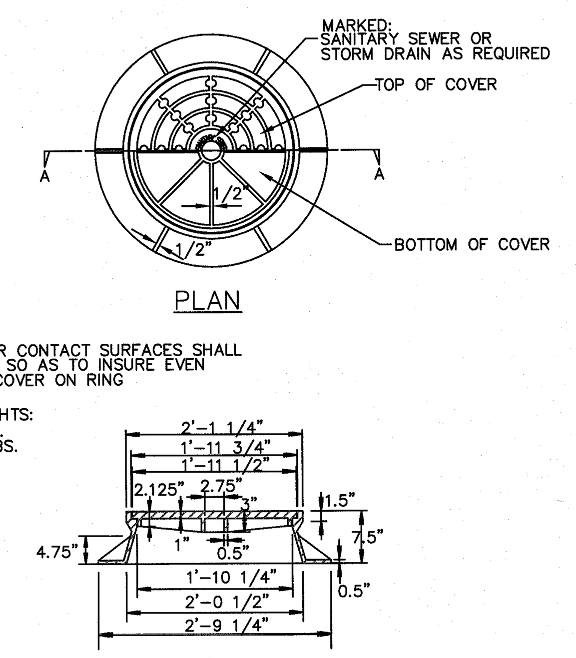

NOTE:
RING & COVER CONTACT SURFACES SHALL BE MACHINED SO AS TO INSURE EVEN BEARING OF COVER ON RING

MINIMUM WEIGHTS:
RING 190 LBS.
COVER 120 LBS.

STANDARD MANHOLE RING AND COVER
SD 14-01
NOT TO SCALE

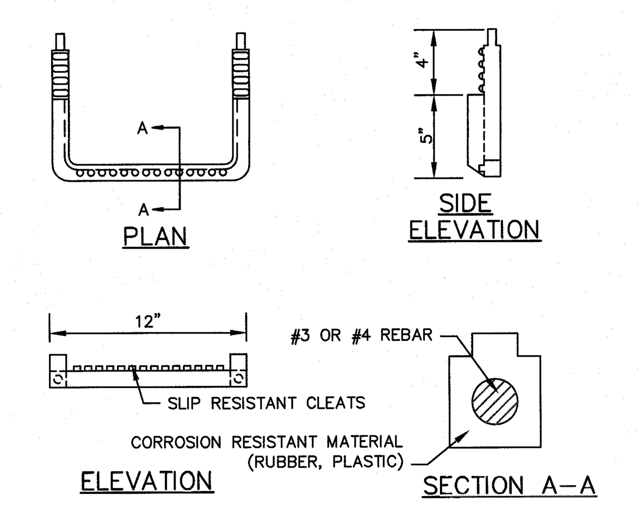

STANDARD SLIP RESISTANT MANHOLE STEP
SD 14-10
NOT TO SCALE

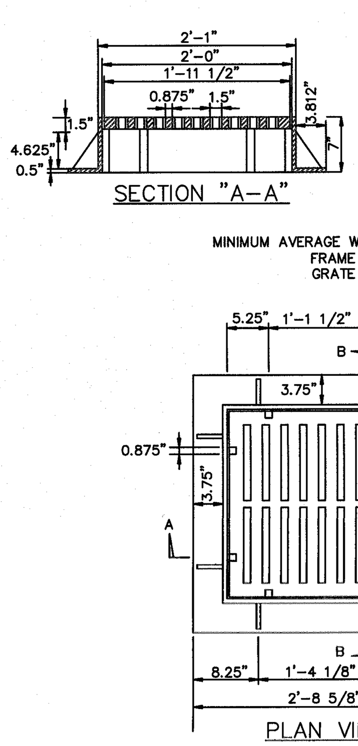

GRILL BASIN CASTINGS
SD 14-04
NOT TO SCALE

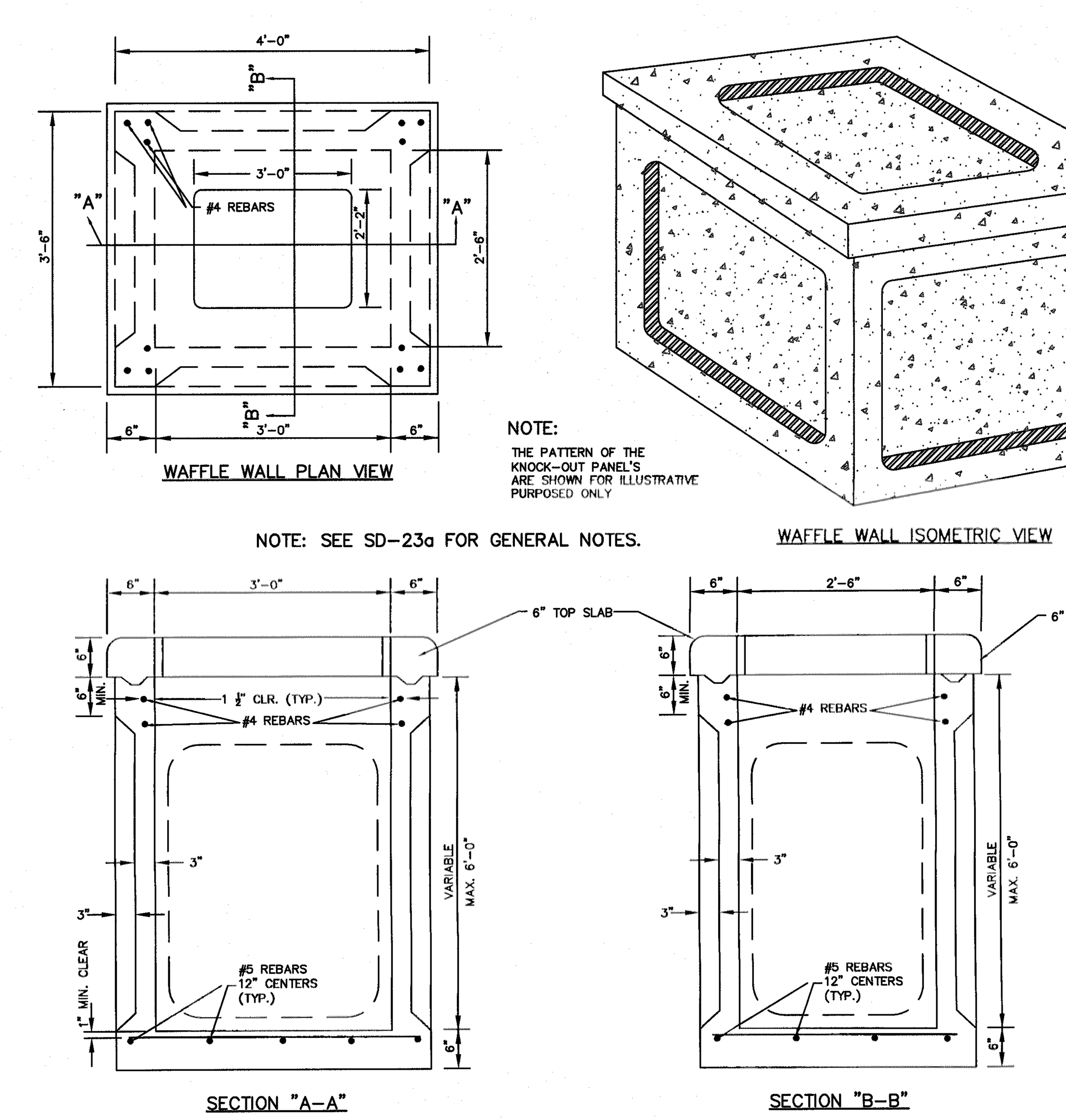

PRECAST DRAINAGE WAFFLE STRUCTURE
SD 2-23

WAFFLE STRUCTURE

GENERAL NOTES:

* USE 4000 PSI CONCRETE, PROVIDE FOR H-20 TRAFFIC LOADING.
* PROVIDE ALL REINFORCING STEEL WHICH MEETS ASTM A615 FOR GRADE 60 AND WELDED WIRE FAVRIC CONFORMING TO ASTM A185,
* LIMIT MAXIMUM DEPTH TO TOP OF BOTTOM SLAB FOR WAFFLE WALL STRUCTURE TO 6'-0".
* PLACE LIFT HOLES OR PINS IN ACCORDANCE WITH OSHA STANDARD 1926.704
* SAW CUT, CORE DRILL OR FORM OPENINGS, FOR PIPE TO PROVIDE REQUIRED SIZE AND LOCATION. ORIENT WAFFLE WALL STRUCTURES SO THAT PIPES ENTER THROUGH THE KNOCKOUT/WAFFLE PANELS ONLY. SEAL OPENINGS WITH HYDRAULIC CEMENT.
* ALL ELEMENTS PRECAST TO MEET ASTM C913.
* SET ON 6" WASHED STONE
* FRAME AND GRATE HEIGHT MAY BE ADJUSTED WITH BRICK.
* PROVIDE PRECAST STURCTURES OVER 4'-0" IN DEPTH WITH STEPS/LADDER INSTALLED IN ACCORDANCE WITH ASHA STANDARD 1910.27 AND AS FIELD CONDITIONS DICTATE.
* WELDED WIRE FABRIC MAY BE SUBSTITUTED FOR REBAR AS LONG AS THE SAME AREA OF STEEL IS PROVIDED,
* SEAL JOINTS WITH A FLEXIBLE BUTYL RUBBER BASE CONFORMING TO FEDERAL SPECIFICATION SS-S-21A, AASHTO M-19B, TYPE B - BUTYL RUBBER.
* LIMIT MAXIMUM STRUCTURE SIZE TO INSIDE CLEAR DEMENSIONS OF 2'- 6" x 3' - 0".
* USE FRAME AND GRATE AS PER SD-19.
* GROUT INVERT TO PROVIDE SMOOTH FLOW

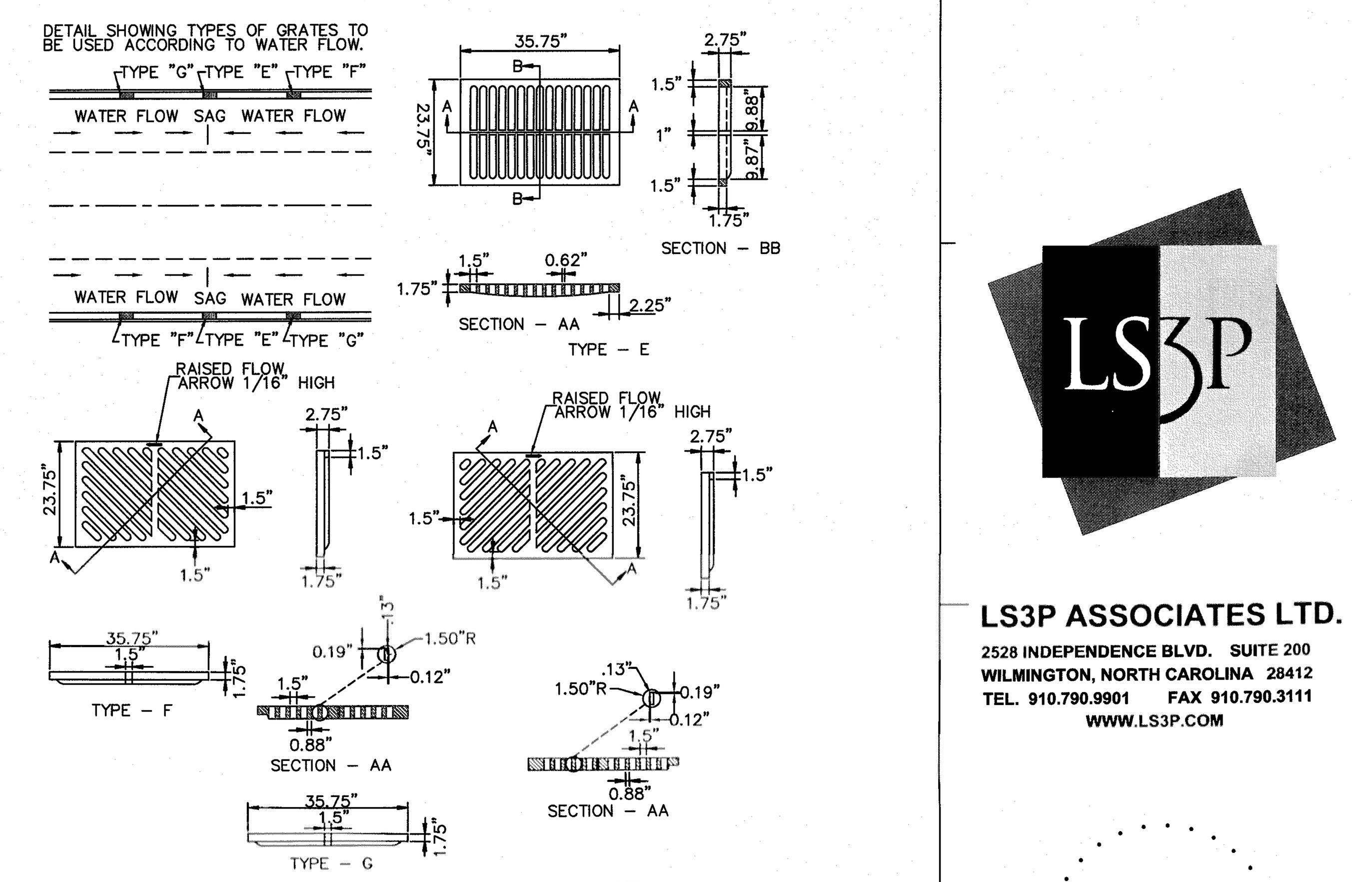

CATCH BASIN GRATE FOR PRE-CAST
SD 2-20
NOT TO SCALE

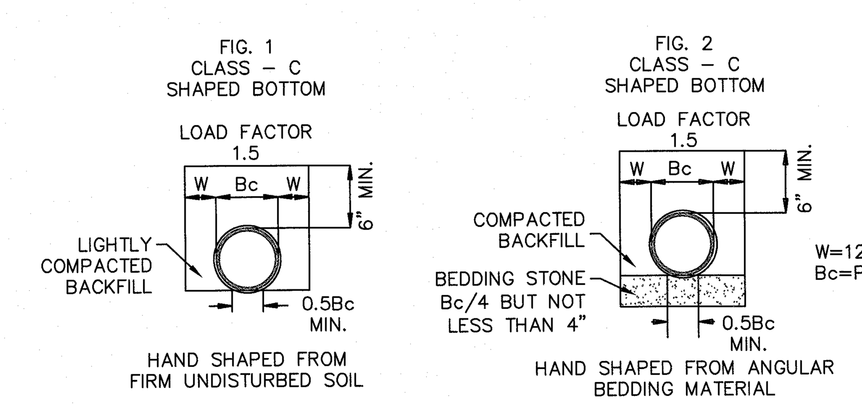

GUIDELINES FOR BEDDING DETAILS, STORM SEWER CLASS C

SD 2-17
NOT TO SCALE

- EXCAVATION FOR STORM DRAINAGE PIPE SHALL BE TO THE LINES AND GRADES AS SHOWN ON THE PLANS.
- THE BEDDING SHALL BE SHAPED IN ACCORDANCE WITH CLASS "C" BEDDING AS SHOWN ON CITY STANDARD DETAIL SD 2-17.
- THE BEDDING SHALL PROVIDE A FIRM FOUNDATION OF UNIFORM DENSITY ALONG THE ENTIRE LENGTH OF PIPE. RECESSES SHALL BE MADE TO ACCOMMODATE BELLS AND JOINTS.
- WHERE UNSTABLE SOILS ARE ENCOUNTERED AS DETERMINED BY GEOTECHNICAL ENGINEER, A MINIMUM 4-INCH THICK BEDDING OF STONE SHALL BE PLACED, SEE FIGURE 2, SD 2-17.
- THE STONE SHALL BE UNIFORMLY GRADED FROM 3/4 INCH TO NO. 4 IN ACCORDANCE WITH ASTM C-33. CARE SHALL BE TAKEN TO PREVENT UNDERCUTTING IN SUITABLE SOIL.
- AREAS UNDERCUT SHALL BE FILLED WITH SUITABLE SOIL AND COMPACTED TO 95% OF MAXIMUM DENSITY AT OPTIMUM MOISTURE CONTENT AS DETERMINED BY ASTM D 1557 STANDARD TEST METHOD.

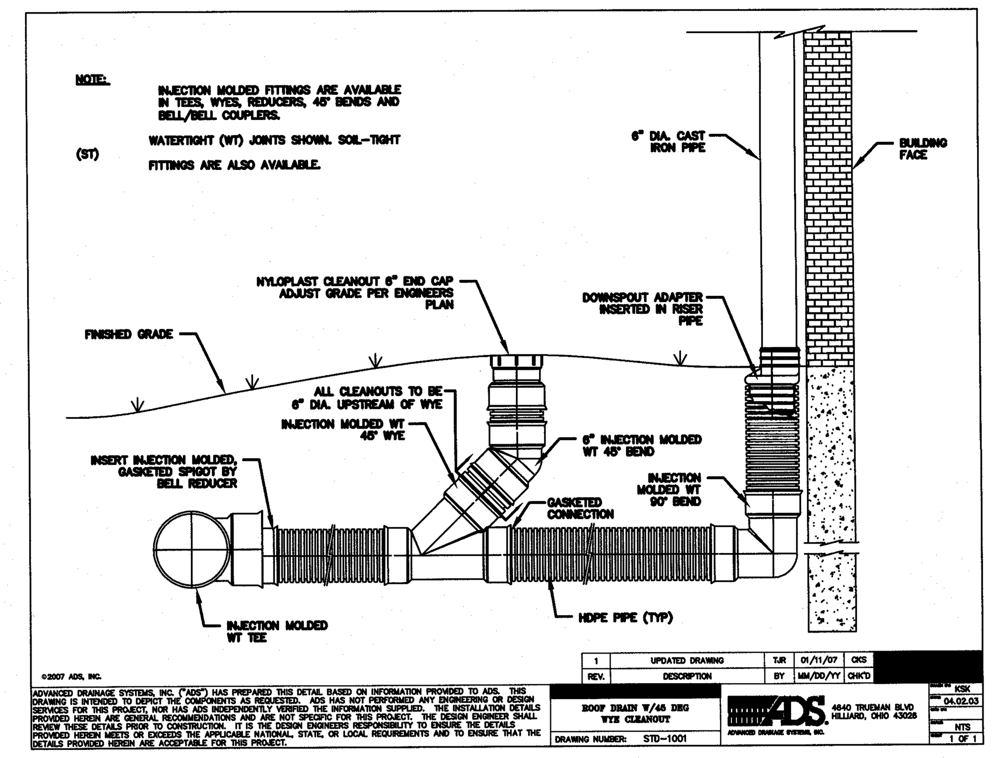

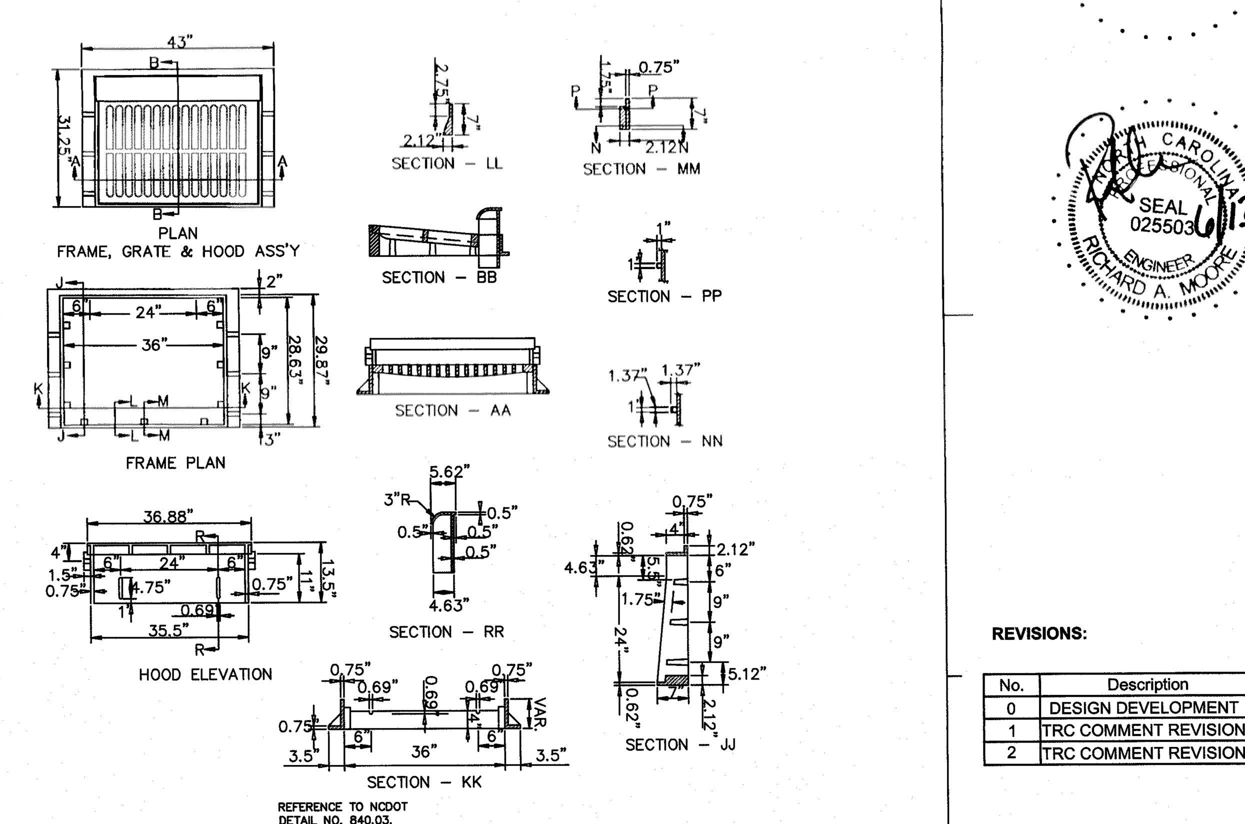

NOTE: USE TYPE "E","F",& "G" GRATE UNLESS OTHERWISE INDICATED

CATCH BASIN CASTING FOR PRE-CAST
SD 2-19
NOT TO SCALE

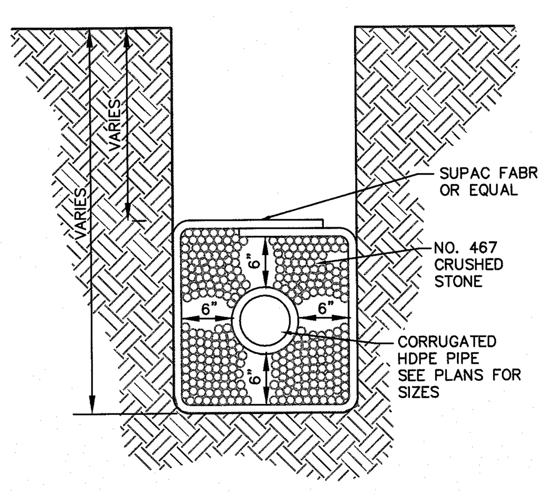

TYPICAL SECTION

GUIDELINES FOR SUB-DRAIN
SD 2-04
NOT TO SCALE

For each open utility cut of City streets, a $325 permit shall be required from the City prior to occupancy and/or project acceptance.

1 inch

STORMWATER MANAGEMENT PLAN
APPROVED
CITY OF WILMINGTON
ENGINEERING DEPARTMENT
DATE__________ PERMIT #________
SIGNED__________________

Approved Construction Plan

	Name	Date
Planning		
Traffic		
Fire		

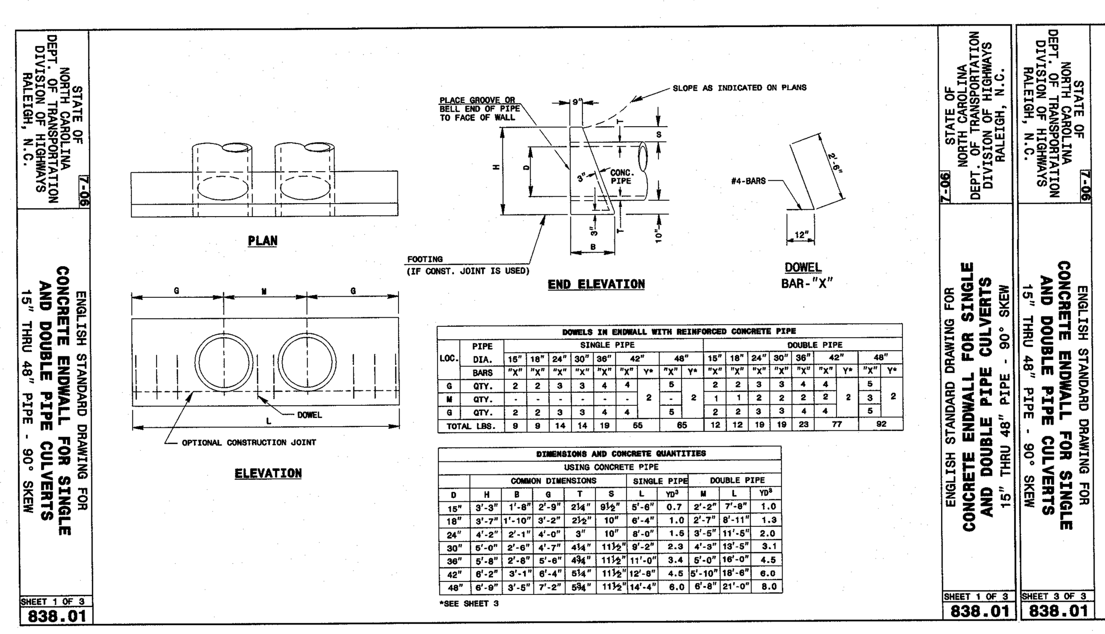

STATE OF NORTH CAROLINA DEPT. OF TRANSPORTATION DIVISION OF HIGHWAYS RALEIGH, N.C.
ENGLISH STANDARD DRAWING FOR CONCRETE ENDWALL FOR SINGLE AND DOUBLE PIPE CULVERTS 15" THRU 48" PIPE - 90° SKEW

GENERAL NOTES:

CHAMFER ALL CORNERS 1" OR HAVE A RADIUS OF 1".

PLACE 2 #6 "Y" BARS IN THE TOP OF ALL ENDWALL FOR PIPE CULVERTS 42" AND OVER WITH A MINIMUM OF 3" COVER AND A LENGTH OF 6" LESS THAN ENDWALL LENGTH.

CONSTRUCT BOTTOM SLAB WITH FORMS.

DO NOT INTERPRET WALL THICKNESS (T) SHOWN FOR THE THICKNESS ACCEPTABLE, BUT IS USED IN COMPUTING ENDWALL QUANTITIES.

WHEN THE CONTRACTOR ELECTS TO USE A CONSTRUCTION JOINT AT THE BOTTOM OF THE PIPE, PLACE BAR "X" DOWELS IN THE BASE AS SHOWN ON PLANS. SPACE BARS APPROXIMATELY ON 12" CENTERS UNLESS OTHERWISE DIRECTED BY THE ENGINEER.

WHEN THE CONTRACTOR ELECTS TO USE A CONSTRUCTION JOINT AT THE BOTTOM OF THE PIPE AND POUR THE BASE SEPARATELY LEAVE THE POUR ROUGH.

USE CLASS "B" CONCRETE.

SHEET 3 OF 3
838.01

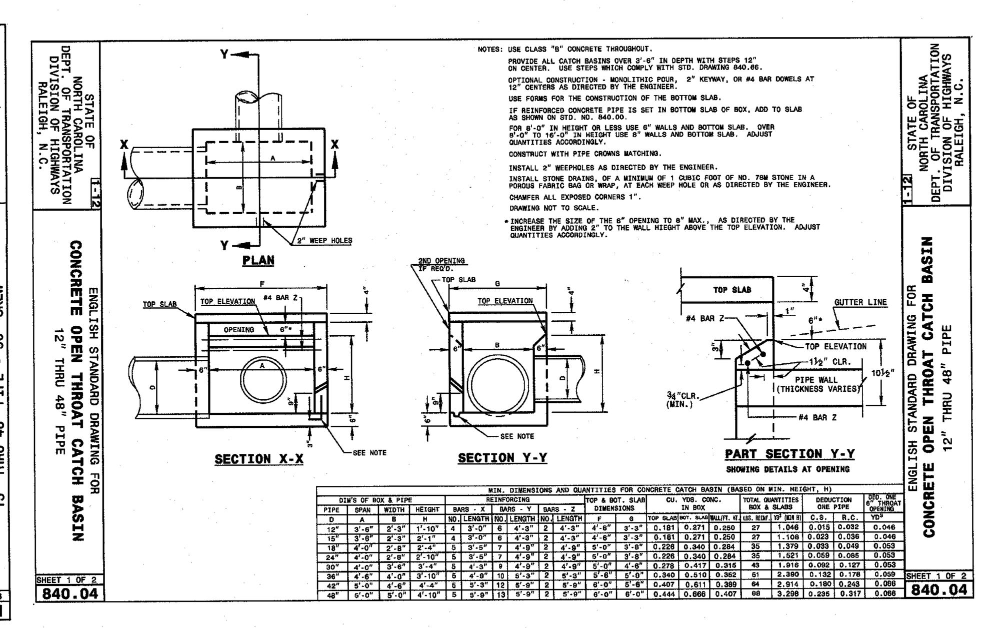

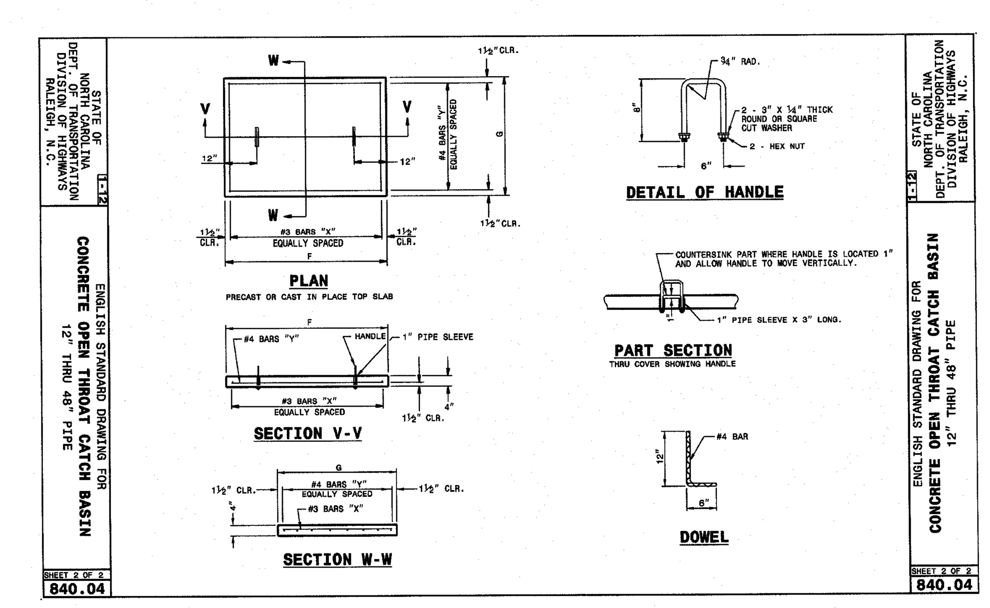

NHRMC OUTPATIENT CARDIOLOGY CENTER

1415 PHYSICIANS DRIVE
WILMINGTON NC, 28402

LS3P ASSOCIATES LTD.
2528 INDEPENDENCE BLVD. SUITE 200
WILMINGTON, NORTH CAROLINA 28412
TEL. 910.790.9901 FAX 910.790.3111
WWW.LS3P.COM

NORTH CAROLINA PROFESSIONAL ENGINEER SEAL 025503 RICHARD A. MOORE 6/13/13

REVISIONS:

No.	Description	Date
0	DESIGN DEVELOPMENT	02/27/2013
1	TRC COMMENT REVISIONS	04/17/2013
2	TRC COMMENT REVISIONS	06/13/2013

PROJECT: 04853-0015
DATE: 11 JUNE 2013
DRAWN BY: EEM
CHECKED BY: RAM

STORM DRAINAGE & GRADING DETAILS

CG-501

SOLUTIONS THROUGH LISTENING
SERVICE BY DESIGN
DESIGN DEVELOPMENT

S:\4853\0015\80-Drawings\Details_48530015.dwg, 6/13/2013 2:45:35 PM, \\wil-print-svr\KIP_7100

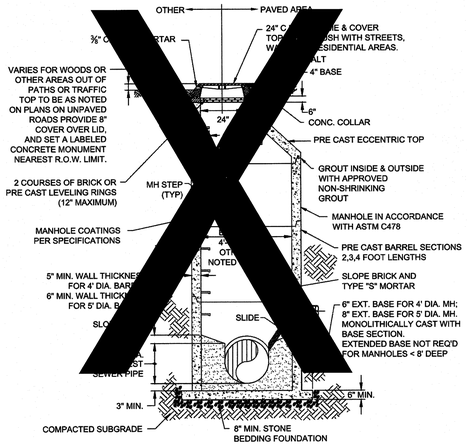

PRECAST CONCRETE OFFSET MANHOLE TYPICAL

(LESS THAN 30" DROP)

NOT TO SCALE

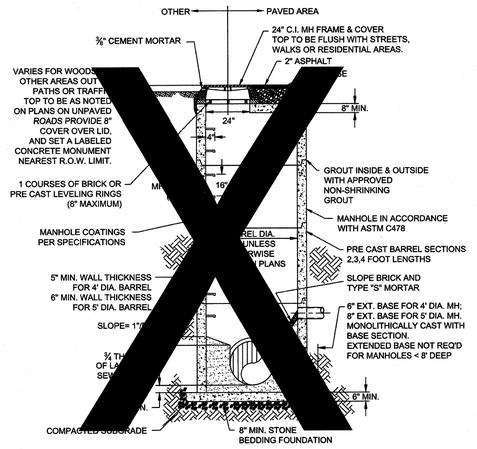

PRECAST CONCRETE FLAT TOP MANHOLE TYPICAL

(LESS THAN 30" DROP)

NOT TO SCALE

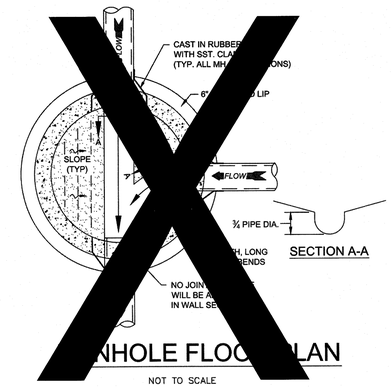

MANHOLE FLOOR PLAN

NOT TO SCALE

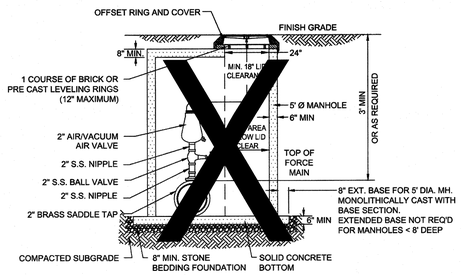

NOTES:
1. CONTRACTOR TO INSTALL VALVE & MANHOLE AT SUFFICIENT DEPTH TO ALLOW FOR ACCESS.
2. FORCE MAIN TO BE OFFSET IN MANHOLE TO KEEP AREA BELOW LID CLEAR.
3. REFER TO SPECIFICATIONS FOR ADDITIONAL DETAILS.
4. USE CAST IN RUBBER BOOT WITH SST. CLAMPS FOR ALL MH CONNECTIONS INCLUDING FORCE MAIN.

AIR / VACUUM AND AIR RELEASE COMBINATION VALVE

NOT TO SCALE

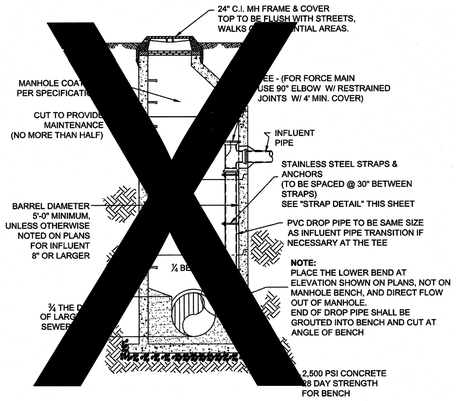

DROP MANHOLE

(MORE THAN 30" DROP)

NOT TO SCALE

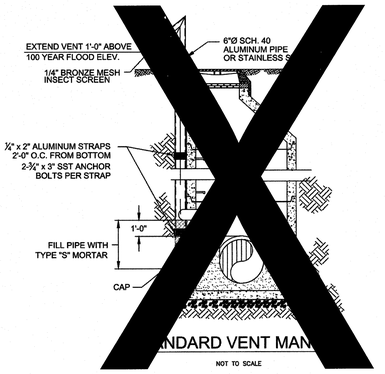

STANDARD VENT MAN

NOT TO SCALE

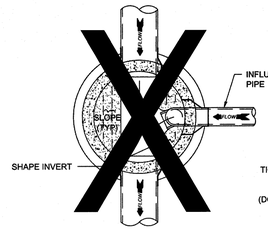

DROP MANHOLE FLOOR PLAN

NOT TO SCALE

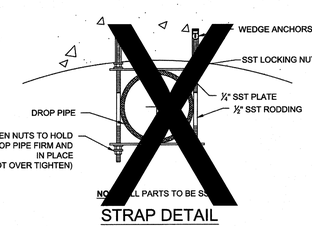

STRAP DETAIL

NOT TO SCALE

CAPE FEAR PUBLIC UTILITY AUTHORITY STANDARD SEWER NOTES:

1. SEWER GUARDS REQUIRED AT ALL MANHOLES. STAINLESS STEEL SEWER GUARDS REQUIRED AT MANHOLES LOCATED IN TRAFFIC AREAS.
2. SERVICES SHALL BE PERPENDICULAR TO MAIN AND TERMINATE AT RIGHT-OF-WAY LINE. SERVICES IN CUL-DE-SACS ARE REQUIRED TO BE PERPENDICULAR, OR MUST ORIGINATE IN MANHOLE AND TERMINATE AT RIGHT-OF-WAY LINE.
3. ALL SERVICES TYING INTO DUCTILE IRON MAINS SHALL BE CONSTRUCTED OF CLASS 50, DIP, WITH PROTECTO 401 CERAMIC EPOXY LINING.
4. MINIMUM 10' UTILITIES EASEMENT PROVIDED ALONG THE FRONTAGE OF ALL LOTS AND AS SHOWN FOR NEW DEVELOPMENTS.
5. NO FLEXIBLE COUPLINGS SHALL BE USED.
6. ALL STAINLESS STEEL FASTENERS SHALL BE 316.

STANDARD SEWER NOTES

(REQUIRED ON ALL SEWER PLAN AND PROFILE SHEETS)

GENERAL NOTES:

1. NO EXCAVATED MATERIAL SHALL BE PLACED IN ANY STREAM, DITCH OR DRAINAGE-WAY.
2. THE CONTRACTOR IS RESPONSIBLE FOR LOCATING ALL UNDERGROUND UTILITIES BEFORE ANY CONSTRUCTION BEGINS.
3. THE CONTRACTOR IS RESPONSIBLE FOR TEMPORARY SEDIMENT AND EROSION CONTROL MEASURES WHILE CONSTRUCTION IS IN PROGRESS.
4. THE CONTRACTOR IS RESPONSIBLE FOR STABILIZATION OF ALL DISTURBED AREAS.
5. THE CONTRACTOR IS RESPONSIBLE FOR LAY DOWN & STOCKPILE AREAS (TO ARRANGE AND INSURE COMPLIANCE WITH ALL LOCAL AND STATE REGULATIONS).

THE DETAILS SHOWN HEREON SUPERCEDE CFPUA WRITTEN TECHNICAL SPECIFICATIONS VERSIONS 1.00 - 1.04

REV:	DESCRIPTION:	DATE:
1	AIR / VACUUM AND AIR RELEASE COMBINATION VALVE REVISED	10/26/12
2	STANDARD SEWER NOTE #6 REVISED	12/10/12

CFPUA SANITARY SEWER

STANDARD DETAILS

CAPE FEAR PUBLIC UTILITY AUTHORITY
235 GOVERNMENT CENTER DRIVE
WILMINGTON, NC 28403
OFFICE: (910)332-6560
Stewardship. Sustainability. Service.

DATE: 1/9/12
SCALE: N/A
DRAWN BY: CFPUA
CHECKED BY: CFPUA
PROJECT NO.:

SHEET NO: SSD-1

For each open utility cut of City streets, a $325 permit shall be required from the City prior to occupancy and/or project acceptance.

1 inch

Approved Construction Plan

	Name	Date
Planning		
Traffic		
Fire		

STORMWATER MANAGEMENT PLAN
APPROVED
CITY OF WILMINGTON
ENGINEERING DEPARTMENT
DATE _____ PERMIT # _____
SIGNED _____

NHRMC OUTPATIENT CARDIOLOGY CENTER

1415 PHYSICIANS DRIVE
WILMINGTON NC, 28402

LS3P ASSOCIATES LTD.
2528 INDEPENDENCE BLVD. SUITE 200
WILMINGTON, NORTH CAROLINA 28412
TEL. 910.790.9901 FAX 910.790.3111
WWW.LS3P.COM

NORTH CAROLINA PROFESSIONAL ENGINEER SEAL 025503 RICHARD A. MOORE

REVISIONS:

No.	Description	Date
0	DESIGN DEVELOPMENT	02/27/2013
1	TRC COMMENT REVISIONS	04/17/2013
2	TRC COMMENT REVISIONS	06/13/2013

PROJECT: 04853-0015
DATE: 11 JUNE 2013
DRAWN BY: EEM
CHECKED BY: RAM

UTILITY DETAILS

CU-501

SOLUTIONS THROUGH LISTENING
SERVICE BY DESIGN

DESIGN DEVELOPMENT

S:\4853\0015\90-Drawings\CFPUA_Details_4853001S.dwg, 6/13/2013 2:46:23 PM, \\wh-print-svr\HP 7100

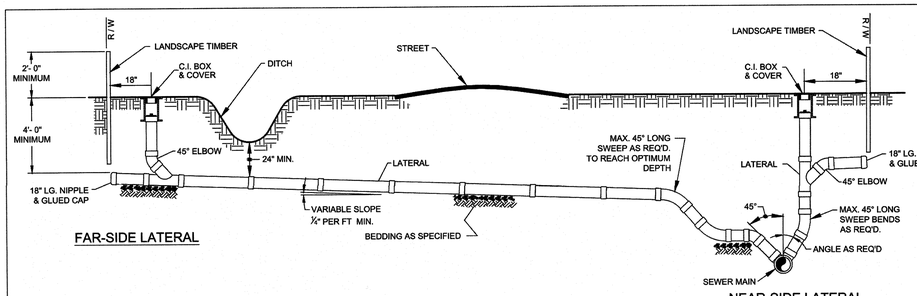

FAR-SIDE LATERAL

NEAR-SIDE LATERAL WITH RIGHT-OF-WAY RESTRICTIONS

NOTE: FOR PRIVATE 8" SERVICES, MANHOLES ARE REQUIRED FOR TIE–IN TO MAIN

STANDARD SERVICE CONNECTION TO SANITARY SEWER

NOT TO SCALE

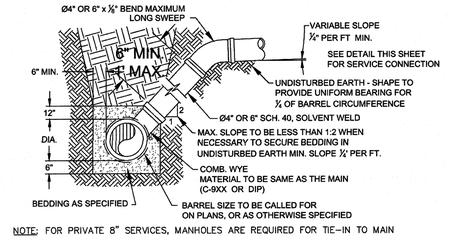

NOTE: FOR PRIVATE 8" SERVICES, MANHOLES ARE REQUIRED FOR TIE–IN TO MAIN

STANDARD SERVICE LATERAL

(MAIN DEPTH LESS THAN 8ft)

NOT TO SCALE

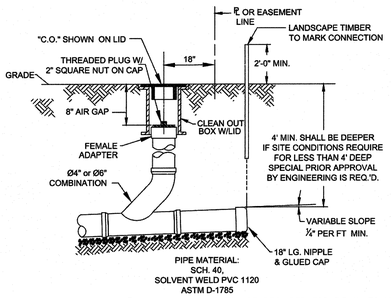

NOTE: FOR PRIVATE 8" SERVICES, MANHOLES ARE REQUIRED FOR TIE–IN TO MAIN

SERVICE CONNECTION & CLEAN-OUT

NOT TO SCALE

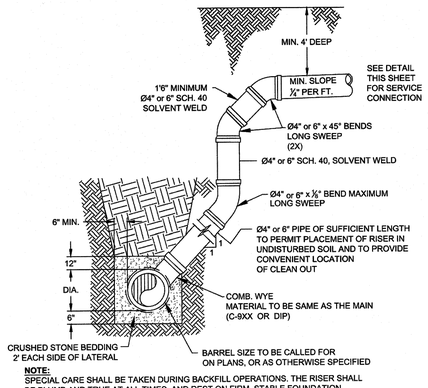

NOTE:
SPECIAL CARE SHALL BE TAKEN DURING BACKFILL OPERATIONS. THE RISER SHALL BE PLUMB AND TRUE AT ALL TIMES, AND REST ON FIRM, STABLE FOUNDATION.

FOR PRIVATE 8" SERVICES, MANHOLES ARE REQUIRED FOR TIE–IN TO MAIN

DEEP SERVICE LATERAL

(MAIN DEPTH GREATER THAN 8ft)

NOT TO SCALE

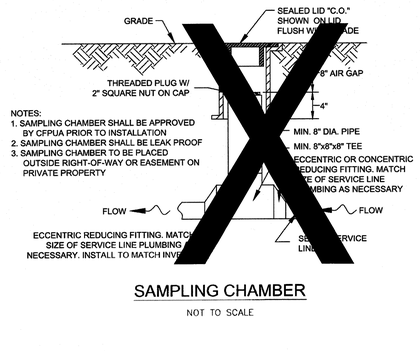

NOTES:
1. SAMPLING CHAMBER SHALL BE APPROVED BY CFPUA PRIOR TO INSTALLATION
2. SAMPLING CHAMBER SHALL BE LEAK PROOF
3. SAMPLING CHAMBER TO BE PLACED OUTSIDE RIGHT-OF-WAY OR EASEMENT ON PRIVATE PROPERTY

SAMPLING CHAMBER

NOT TO SCALE

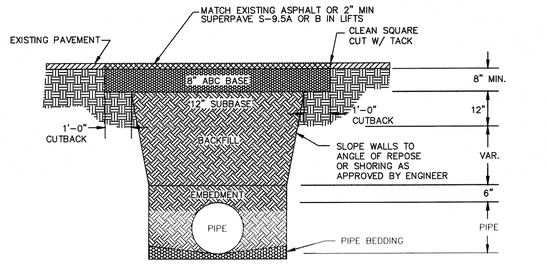

NOTES:
1. BACKFILL SHALL BE SUITABLE MATERIAL THAT IS FREE FROM HEAVY CLAY, GUMBOS, DEBRIS, ORGANICS AND LITTLE TO NO EXCESSIVE MOISTURE.
2. SELECT BACKFILL MAY BE SUBSTITUTED OR REQUIRED BY CITY TO ACHIEVE COMPACTION, (I.E. #57, ABC, CRUSHED LIMESTONE, CLEAN SAND, FLOWABLE FILL, ETC).
3. 8–INCH OF ABC BASE MATERIAL SHALL BE USED ON CITY STREETS.
4. BACKFILL AND BASE MATERIALS SHALL BE COMPACTED 12" MINIMUM LIFTS
5. SOIL SHALL BE COMPACTED BY A MECHANIZED TAMPER (I.E. JUMPING JACK), HOWEVER, VIBRATORY ROLLERS > 18" WIDTH MAY BE USED FOR LARGER EXCAVATIONS. THE PLATE TAMP METHOD SHALL NOT BE USED.
6. ALL APPROVED CASTINGS SHALL BE SET FLUSH TO GRADE AND SUPPORTED IF APPLICABLE.
7. ABC BASE AND SUBBASE COMPACTED TO 98% AND BACKFILL AND EMBEDMENT COMPACTED TO 90% AS DETERMINED BY THE MODIFIED PROCTOR AASHTO METHOD T–99.
8. 1–FOOT CUTBACKS OF ASPHALT SHALL BE PREPARED ON UNDISTURBED SOIL. MINIMUM ASPHALT DENSITY IS 90%

PAVEMENT REPAIR WHERE PIPE INSTALLED

(FOR PRIVATE ROADS AND PAVED AREAS;
CONTRACTOR TO MEET MIN. REQUIREMENTS AS DEFINED BY
RIGHT-OF-WAY OWNER FOR PUBLIC ROAD REPAIRS)

NOT TO SCALE

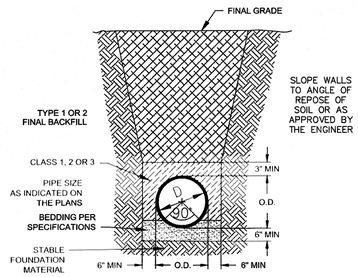

CL 50 DUCTILE IRON DR 18 PVC PIPE TRENCH DETAIL

NOT TO SCALE

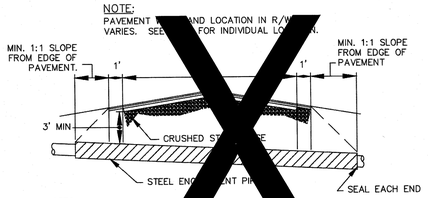

NOTES:
1. CASING WILL BE INSTALL LINE AND GRA OWN ON INDIVIDUAL PROFILE FOR EACH CROSSING. /JACKING TO LIN GRADE IS REQUIRED.
2. TRACER WIRE SHALL NTINUED THROUGH

TYPICAL BORING/JACKING DETAIL

NOT TO SCALE

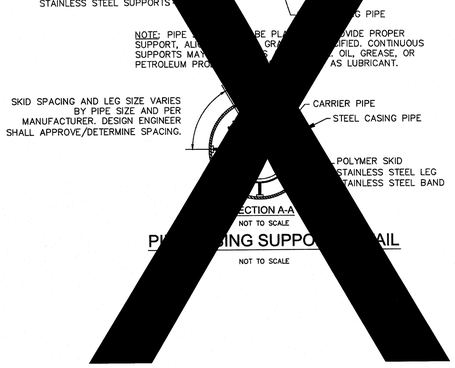

NOT TO SCALE

PI ING SUPPO AIL

NOT TO SCALE

GENERAL NOTES:

1. NO EXCAVATED MATERIAL SHALL BE PLACED IN ANY STREAM, DITCH OR DRAINAGE-WAY.
2. THE CONTRACTOR IS RESPONSIBLE FOR LOCATING ALL UNDERGROUND UTILITIES BEFORE ANY CONSTRUCTION BEGINS.
3. THE CONTRACTOR IS RESPONSIBLE FOR TEMPORARY SEDIMENT AND EROSION CONTROL MEASURES WHILE CONSTRUCTION IS IN PROGRESS.
4. THE CONTRACTOR IS RESPONSIBLE FOR STABILIZATION OF ALL DISTURBED AREAS.
5. THE CONTRACTOR IS RESPONSIBLE FOR LAY DOWN & STOCKPILE AREAS (TO ARRANGE AND INSURE COMPLIANCE WITH ALL LOCAL AND STATE REGULATIONS).

THE DETAILS SHOWN HEREON SUPERCEDE CFPUA WRITTEN TECHNICAL SPECIFICATIONS VERSIONS 1.00 - 1.04

REV:	DESCRIPTION:	DATE:
1	SAMPLING CHAMBER REVISED	10/26/12

Approved Construction Plan

Name Date

Planning_____

Traffic_____

Fire_____

STORMWATER MANAGEMENT PLAN
APPROVED
CITY OF WILMINGTON
ENGINEERING DEPARTMENT
DATE_____ PERMIT #_____
SIGNED_____

For each open utility cut of City streets, a $325 permit shall be required from the City prior to occupancy and/or project acceptance.

1 inch

CFPUA SANITARY SEWER

STANDARD DETAILS

CAPE FEAR PUBLIC UTILITY AUTHORITY
235 GOVERNMENT CENTER DRIVE
WILMINGTON, NC 28403
OFFICE: (910)332-6560
Stewardship. Sustainability. Service.

DATE: 1/9/12
SCALE: N/A
DRAWN BY: CFPUA
CHECKED BY: CFPUA
PROJECT NO.:

SHEET NO: SSD-2

NHRMC OUTPATIENT CARDIOLOGY CENTER

1415 PHYSICIANS DRIVE
WILMINGTON NC, 28402

LS3P ASSOCIATES LTD.
2528 INDEPENDENCE BLVD. SUITE 200
WILMINGTON, NORTH CAROLINA 28412
TEL. 910.790.9901 FAX 910.790.3111
WWW.LS3P.COM

NORTH CAROLINA PROFESSIONAL SEAL 025003 6/13/13 ENGINEER EDWARD A. MOORE

REVISIONS:

No.	Description	Date
0	DESIGN DEVELOPMENT	02/27/2013
1	TRC COMMENT REVISIONS	04/17/2013
2	TRC COMMENT REVISIONS	06/13/2013

PROJECT: 04853-0015
DATE: 11 JUNE 2013
DRAWN BY: EEM
CHECKED BY: RAM

UTILITY DETAILS

CU-502

SOLUTIONS THROUGH LISTENING
SERVICE BY DESIGN
DESIGN DEVELOPMENT

S:\4853\001\90-Drawings\CFPUA_Details_4853001S.dwg, 6/13/2013 2:46:54 PM, \\wil-print-srv\XP_7100

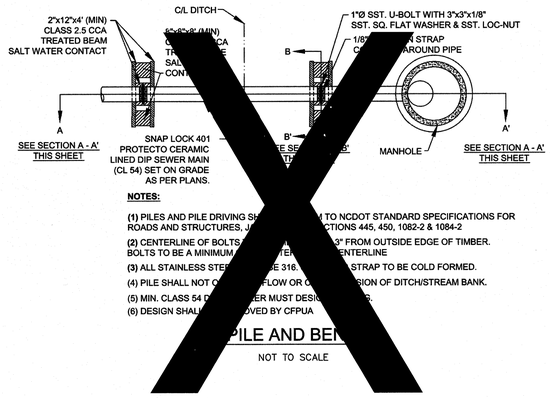

NOTES:

(1) PILES AND PILE DRIVING SH… TO NCDOT STANDARD SPECIFICATIONS FOR ROADS AND STRUCTURES, J… CTIONS 445, 450, 1082-2 & 1084-2

(2) CENTERLINE OF BOLTS … 3" FROM OUTSIDE EDGE OF TIMBER. BOLTS TO BE A MINIMUM … CENTERLINE

(3) ALL STAINLESS STE… E 316. … STRAP TO BE COLD FORMED.

(4) PILE SHALL NOT O… FLOW OR C… SION OF DITCH/STREAM BANK.

(5) MIN. CLASS 54 D… ER MUST DESIG… G.

(6) DESIGN SHALL … OVED BY CFPUA

PILE AND BE…

NOT TO SCALE

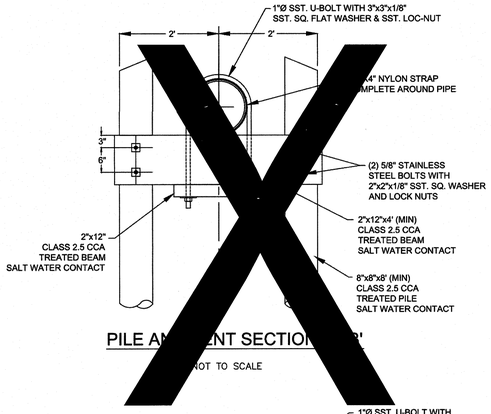

PILE A… NT SECTIO…

NOT TO SCALE

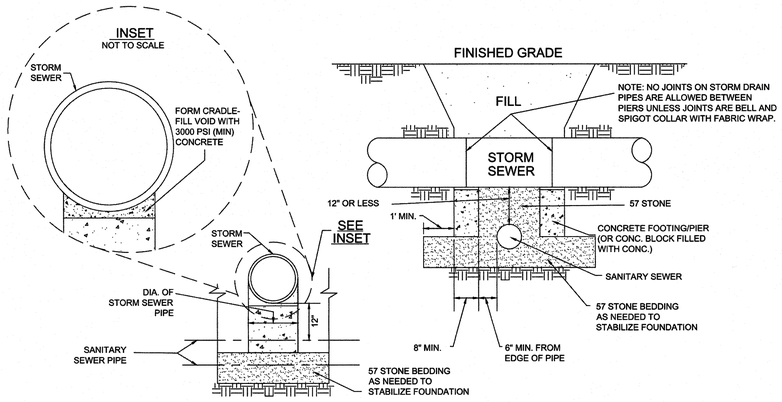

STRUCTURAL BRIDGING DETAIL FOR STORMWATER OVER GRAVITY SEWER INSTALLATIONS WITH LESS THAN 12" SEPARATION

NOT TO SCALE

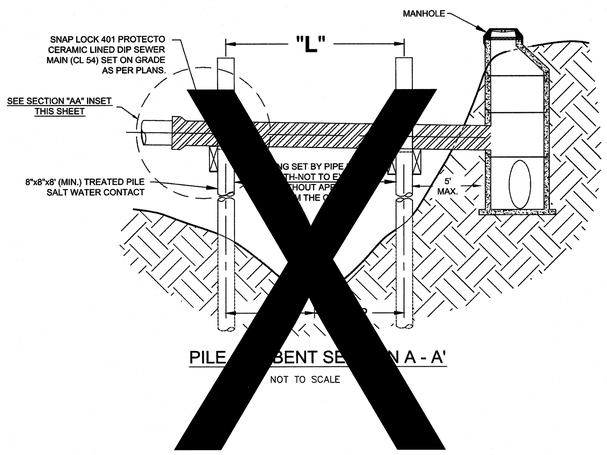

PILE … BENT SE… N A - A'

NOT TO SCALE

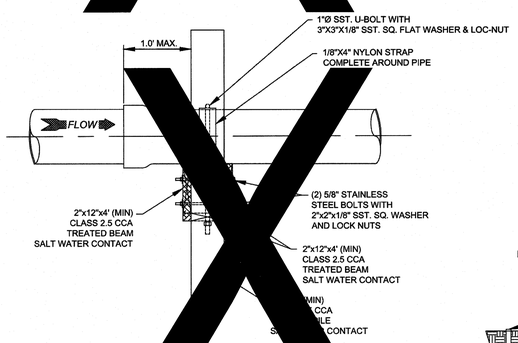

PILE AND B… SECTION A - A… ET

NOT TO SCALE

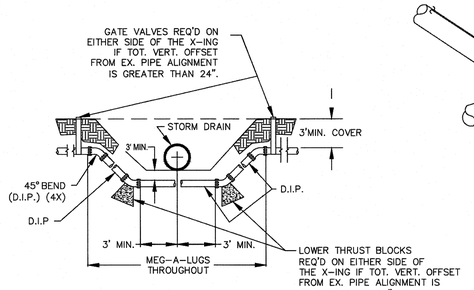

NOTE: USE D.I.P. (CL50 OR BETTER)

FORCE MAIN DITCH & STORM DRAIN CROSSING

NOT TO SCALE

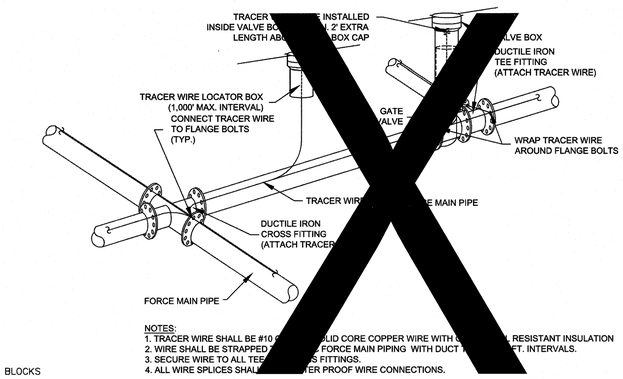

NOTES:
1. TRACER WIRE SHALL BE #10 … LID CORE COPPER WIRE WITH … RESISTANT INSULATION
2. WIRE SHALL BE STRAPPED … FORCE MAIN PIPING WITH DUCT … FT. INTERVALS.
3. SECURE WIRE TO ALL TEE… S FITTINGS.
4. ALL WIRE SPLICES SHAL… ER PROOF WIRE CONNECTIONS.

TRACER WIRE DETAIL

NOT TO SCALE

GENERAL NOTES:

1. NO EXCAVATED MATERIAL SHALL BE PLACED IN ANY STREAM, DITCH OR DRAINAGE-WAY.
2. THE CONTRACTOR IS RESPONSIBLE FOR LOCATING ALL UNDERGROUND UTILITIES BEFORE ANY CONSTRUCTION BEGINS.
3. THE CONTRACTOR IS RESPONSIBLE FOR TEMPORARY SEDIMENT AND EROSION CONTROL MEASURES WHILE CONSTRUCTION IS IN PROGRESS.
4. THE CONTRACTOR IS RESPONSIBLE FOR STABILIZATION OF ALL DISTURBED AREAS.
5. THE CONTRACTOR IS RESPONSIBLE FOR LAY DOWN & STOCKPILE AREAS (TO ARRANGE AND INSURE COMPLIANCE WITH ALL LOCAL AND STATE REGULATIONS).

THE DETAILS SHOWN HEREON SUPERCEDE CFPUA WRITTEN TECHNICAL SPECIFICATIONS VERSIONS 1.00 - 1.04

REV:	DESCRIPTION:	DATE:

CFPUA SANITARY SEWER

STANDARD DETAILS

CAPE FEAR PUBLIC UTILITY AUTHORITY
235 GOVERNMENT CENTER DRIVE
WILMINGTON, NC 28403
OFFICE: (910)332-6560
Stewardship. Sustainability. Service.

DATE: 1/9/12
SCALE: N/A
DRAWN BY: CFPUA
CHECKED BY: CFPUA
PROJECT NO. :

SHEET NO: SSD-3

Approved Construction Plan

	Name	Date
Planning		
Traffic		
Fire		

STORMWATER MANAGEMENT PLAN
APPROVED
CITY OF WILMINGTON
ENGINEERING DEPARTMENT
DATE _____ PERMIT # _____
SIGNED _____

For each open utility cut of City streets, a $325 permit shall be required from the City prior to occupancy and/or project acceptance.

1 inch

NHRMC OUTPATIENT CARDIOLOGY CENTER

1415 PHYSICIANS DRIVE
WILMINGTON NC, 28402

LS3P ASSOCIATES LTD.
2528 INDEPENDENCE BLVD. SUITE 200
WILMINGTON, NORTH CAROLINA 28412
TEL. 910.790.9901 FAX 910.790.3111
WWW.LS3P.COM

NORTH CAROLINA PROFESSIONAL ENGINEER SEAL 025503 RICHARD A. MOORE 6/13/13

REVISIONS:

No.	Description	Date
0	DESIGN DEVELOPMENT	02/27/2013
1	TRC COMMENT REVISIONS	04/17/2013
2	TRC COMMENT REVISIONS	06/13/2013

PROJECT: 04853-0015
DATE: 11 JUNE 2013
DRAWN BY: EEM
CHECKED BY: RAM

UTILITY DETAILS

CU-503

SOLUTIONS THROUGH LISTENING
SERVICE BY DESIGN
DESIGN DEVELOPMENT

S:\4853\0015\05-Drawings\CFPUA_Details_4853(0015.dwg, 6/13/2013 2:47:22 PM, \\wil-print-svr\DP_7100

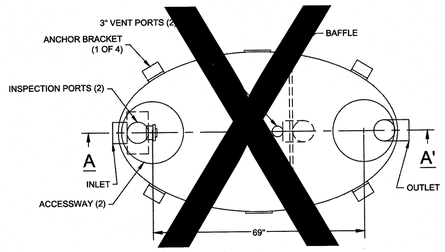

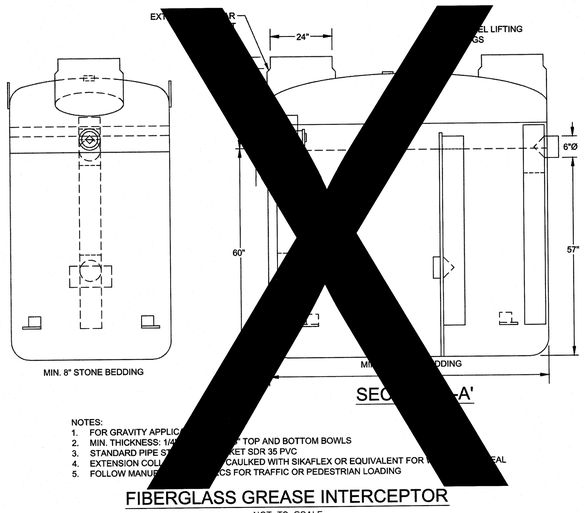

NOTES:
1. FOR GRAVITY APPLIC
2. MIN. THICKNESS: 1/4 TOP AND BOTTOM BOWLS
3. STANDARD PIPE S KET SDR 35 PVC
4. EXTENSION COLL CAULKED WITH SIKAFLEX OR EQUIVALENT FOR EAL
5. FOLLOW MANUF CS FOR TRAFFIC OR PEDESTRIAN LOADING

FIBERGLASS GREASE INTERCEPTOR
NOT TO SCALE

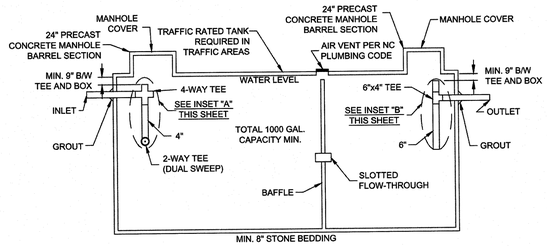

CONCRETE GREASE INTERCEPTOR
NOT TO SCALE

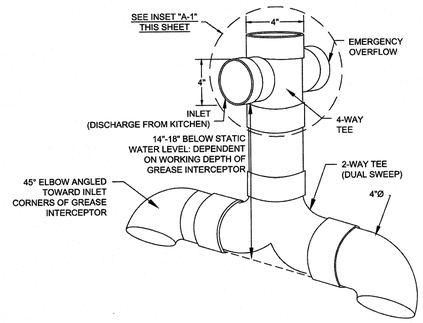

GREASE INTERCEPTOR
INSET "A"
4" SANITARY TEE
NOT TO SCALE

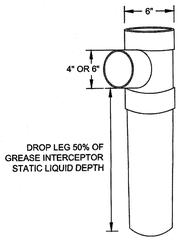

GREASE
INTERCEPTOR
INSET "B"
6" X 6" X 4" OUTLET
SANITARY TEE
NOT TO SCALE

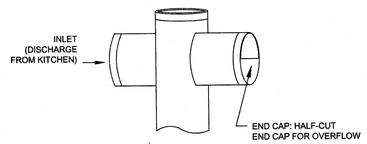

GREASE INTERCEPTOR INSET "A-1"
EMERGENCY OVERFLOW CLOSE-UP
NOT TO SCALE

GENERAL NOTES:

1. NO EXCAVATED MATERIAL SHALL BE PLACED IN ANY STREAM, DITCH OR DRAINAGE-WAY.
2. THE CONTRACTOR IS RESPONSIBLE FOR LOCATING ALL UNDERGROUND UTILITIES BEFORE ANY CONSTRUCTION BEGINS.
3. THE CONTRACTOR IS RESPONSIBLE FOR TEMPORARY SEDIMENT AND EROSION CONTROL MEASURES WHILE CONSTRUCTION IS IN PROGRESS.
4. THE CONTRACTOR IS RESPONSIBLE FOR STABILIZATION OF ALL DISTURBED AREAS.
5. THE CONTRACTOR IS RESPONSIBLE FOR LAY DOWN & STOCKPILE AREAS (TO ARRANGE AND INSURE COMPLIANCE WITH ALL LOCAL AND STATE REGULATIONS).

THE DETAILS SHOWN HEREON SUPERCEDE CFPUA WRITTEN TECHNICAL SPECIFICATIONS VERSIONS 1.00 - 1.04

REV:	DESCRIPTION:	DATE:

CFPUA SANITARY SEWER

STANDARD DETAILS

CAPE FEAR PUBLIC UTILITY AUTHORITY
235 GOVERNMENT CENTER DRIVE
WILMINGTON, NC 28403
OFFICE: (910)332-6560
Stewardship. Sustainability. Service.

DATE: 1/9/12
SCALE: N/A
DRAWN BY: CFPUA
CHECKED BY: CFPUA
PROJECT NO.:

SHEET NO: SSD-4

Approved Construction Plan

	Name	Date
Planning		
Traffic		
Fire		

STORMWATER MANAGEMENT PLAN
APPROVED
CITY OF WILMINGTON
ENGINEERING DEPARTMENT
DATE_____ PERMIT #_____
SIGNED_____

For each open utility cut of City streets, a $325 permit shall be required from the City prior to occupancy and/or project acceptance.

1 inch

NHRMC OUTPATIENT CARDIOLOGY CENTER

1415 PHYSICIANS DRIVE
WILMINGTON NC, 28402

LS3P ASSOCIATES LTD.
2528 INDEPENDENCE BLVD. SUITE 200
WILMINGTON, NORTH CAROLINA 28412
TEL. 910.790.9901 FAX 910.790.3111
WWW.LS3P.COM

CAROLINA ENGINEERING CONSULTANTS, P.A. SEAL 025503 ENGINEER RICHARD A. MOORE

REVISIONS:

No.	Description	Date
0	DESIGN DEVELOPMENT	02/27/2013
1	TRC COMMENT REVISIONS	04/17/2013
2	TRC COMMENT REVISIONS	06/13/2013

PROJECT: 04853-0015
DATE: 11 JUNE 2013
DRAWN BY: EEM
CHECKED BY: RAM

UTILITY DETAILS

CU-504

SOLUTIONS THROUGH LISTENING
SERVICE BY DESIGN
DESIGN DEVELOPMENT

S:\4853\00\15\0-Drawings\CFPUA_Details_4853015.dwg, 6/13/2013 2:47:46 PM, \\wit-print-svr\KP_7100

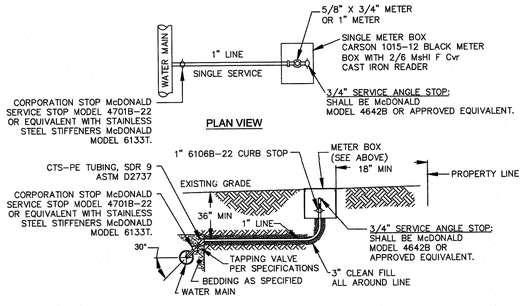

NOTES:
1. NO JOINT SHALL BE INSTALLED BETWEEN THE MAIN SERVICE TAP AND THE METER STOP. ALL SERVICES SHALL BE INSTALLED PERPENDICULAR TO MAIN.
2. SERVICE SADDLES ON PVC MAINS SHALL BE WIDE BAND BRASS BODY; SADDLE McDONALD 3801 OR EQUIVALENT
3. METER BOXES SUSCEPTIBLE TO TRAFFIC SHALL CONFORM TO ASTM A48, CLASS 30B AND AASHTO H20 LOAD RATING STANDARDS (SIP MODEL 4240 OR APPROVED EQUIVALENT)

SINGLE SERVICE CONNECTION

TYPICAL WATER SERVICE CONNECTION FOR RESIDENTIAL SINGLE FAMILY HOME ON CFPUA WATER SYSTEM

NOT TO SCALE

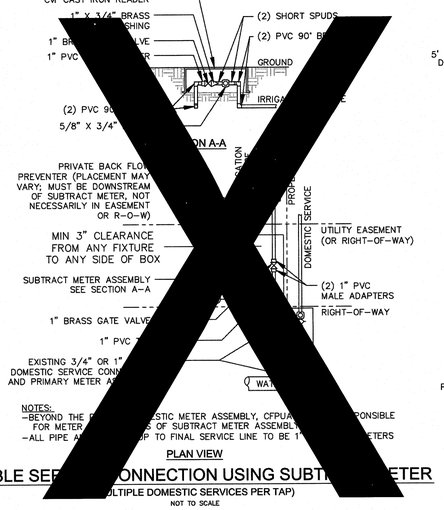

NOTES:
-BEYOND THE ESTIC METER ASSEMBLY, CFPUA FOR METER ONSIBLE OF SUBTRACT METER ASSEMBL -ALL PIPE A P TO FINAL SERVICE LINE TO BE 1 ETERS

DOUBLE SE ONNECTION USING SUBT ETER

ULTIPLE DOMESTIC SERVICES PER TAP)

NOT TO SCALE

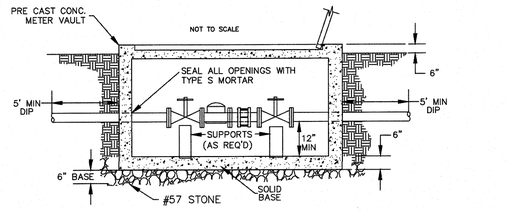

METER VAULT SECTION A-A

NOT TO SCALE

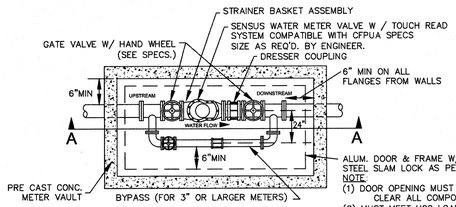

WATER METER VAULT

FOR WATER METERS LARGER THAN 2"

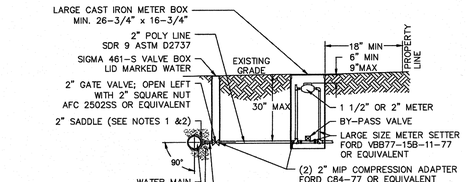

NOTES:
1. ALL SERVICES SHALL BE INSTALLED PERPENDICULAR TO MAIN.
2. SERVICE SADDLES ON PVC MAINS SHALL BE WIDE BAND BRASS BODY; McDONALD 3800, FORD S90 (DOUBLE STRAP) OR EQUIVALENT.
3. METER BOXES SUSCEPTIBLE TO TRAFFIC SHALL CONFORM TO ASTM A48, CLASS 30B AND AASHTO H20 LOAD RATING STANDARDS (OLDCASTLE PRECAST MODEL B1730 OR APPROVED EQUIVALENT).
4. METER BOXES SUSCEPTIBLE TO INCIDENTAL, NON-DELIBERATE TRAFFIC SHALL CONFORM TO ANSI/SCTE 77 TIER 15 LOAD RATING STANDARDS (SYNERTECH MODEL DUO 17x30 OR APPROVED EQUIVALENT).
5. NON-TRAFFIC METER BOXES SHALL BE SIGMA MB2203 OR APPROVED EQUIVALENT.
6. 3" CLEAN FILL REQUIRED ALL AROUND 2" POLY SERVICE LINE.

LARGE METER

FOR 1 1/2" OR 2" WATER SERVICES

NOT TO SCALE

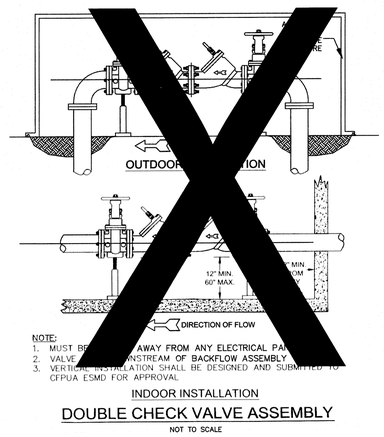

NOTE:
1. MUST BE AWAY FROM ANY ELECTRICAL PA
2. VALVE NSTREAM OF BACKFLOW ASSEMBLY
3. VERTICAL INSTALLATION SHALL BE DESIGNED AND SUBMITTED TO CFPUA ESMD FOR APPROVAL

INDOOR INSTALLATION

DOUBLE CHECK VALVE ASSEMBLY

NOT TO SCALE

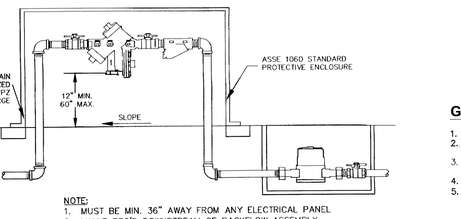

NOTE:
MUST BE MIN. 36" AWAY FROM ANY ELECTRICAL PANEL

INDOOR HORIZONTAL INSTALLATION

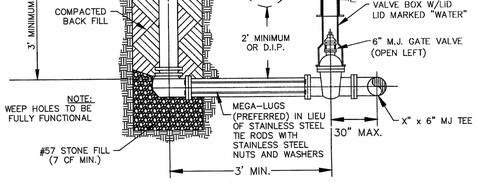

FIRE HYDRANT ASSEMBLY

NOT TO SCALE

NOTE:
1. MUST BE MIN. 36" AWAY FROM ANY ELECTRICAL PANEL
2. VALVE REQ'D DOWNSTREAM OF BACKFLOW ASSEMBLY
3. VERTICAL INSTALLATION SHALL BE DESIGNED AND SUBMITTED TO CFPUA ESMD FOR APPROVAL

OUTDOOR HORIZONTAL INSTALLATION

REDUCED PRESSURE PRINCIPLE ASSEMBLY

NOT TO SCALE

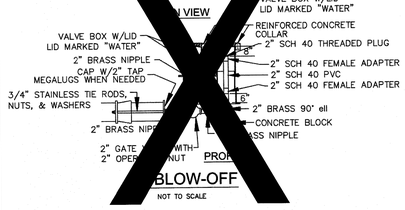

NOT TO SCALE

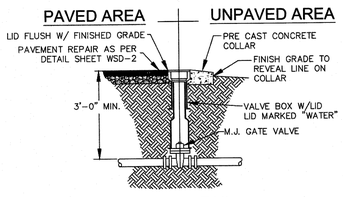

VALVE DETAIL

NOT TO SCALE

GENERAL NOTES:

1. NO EXCAVATED MATERIAL SHALL BE PLACED IN ANY STREAM, DITCH OR DRAINAGE-WAY.
2. THE CONTRACTOR IS RESPONSIBLE FOR LOCATING ALL UNDERGROUND UTILITIES BEFORE ANY CONSTRUCTION BEGINS.
3. THE CONTRACTOR IS RESPONSIBLE FOR TEMPORARY SEDIMENT AND EROSION CONTROL MEASURES WHILE CONSTRUCTION IS IN PROGRESS.
4. THE CONTRACTOR IS RESPONSIBLE FOR STABILIZATION OF ALL DISTURBED AREAS.
5. THE CONTRACTOR IS RESPONSIBLE FOR LAY DOWN & STOCKPILE AREAS (TO ARRANGE AND ENSURE COMPLIANCE WITH ALL LOCAL AND STATE REGULATIONS).

THE DETAILS SHOWN HEREON SUPERCEDE CFPUA WRITTEN TECHNICAL SPECIFICATIONS VERSIONS 1.00 - 1.04

REV:	DESCRIPTION:	DATE:
1	Single Service Connection, Double Service Connection, and Large Meter Revised	10/26/12

CFPUA WATER DISTRIBUTION SYSTEM

STANDARD DETAILS

CAPE FEAR PUBLIC UTILITY AUTHORITY
235 GOVERNMENT CENTER DRIVE
WILMINGTON, NC 28403
OFFICE: (910)332-6560
Stewardship. Sustainability. Service.

DATE: 1/9/12
SCALE: N/A
DRAWN BY: CFPUA
CHECKED BY: CFPUA
PROJECT NO.:

SHEET NO: WSD-1

For each open utility cut of City streets, a $325 permit shall be required from the City prior to occupancy and/or project acceptance.

1 inch

Approved Construction Plan

	Name	Date
Planning		
Traffic		
Fire		

STORMWATER MANAGEMENT PLAN
APPROVED
CITY OF WILMINGTON
ENGINEERING DEPARTMENT
DATE _____ PERMIT # _____
SIGNED _____

S:\48539001\810-Drawings\CFPUA_Details_48530015.dwg, 6/13/2013 2:48:11 PM, \\wil-print-svr\WP_7100

NHRMC OUTPATIENT CARDIOLOGY CENTER

1415 PHYSICIANS DRIVE
WILMINGTON NC, 28402

LS3P ASSOCIATES LTD.
2528 INDEPENDENCE BLVD. SUITE 200
WILMINGTON, NORTH CAROLINA 28412
TEL. 910.790.9901 FAX 910.790.3111
WWW.LS3P.COM

NORTH CAROLINA REGISTERED LANDSCAPE ARCHITECT SEAL 02503 ENGINEER RICHARD A. MOORE

REVISIONS:

No.	Description	Date
0	DESIGN DEVELOPMENT	02/27/2013
1	TRC COMMENT REVISIONS	04/17/2013
2	TRC COMMENT REVISIONS	06/13/2013

PROJECT: 04853-0015
DATE: 11 JUNE 2013
DRAWN BY: EEM
CHECKED BY: RAM

UTILITY DETAILS

CU-505

SOLUTIONS THROUGH LISTENING
SERVICE BY DESIGN
DESIGN DEVELOPMENT

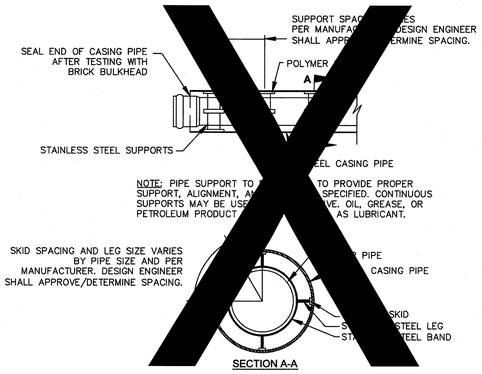

PIPE CASING SUPPORT DETAIL

NOT TO SCALE

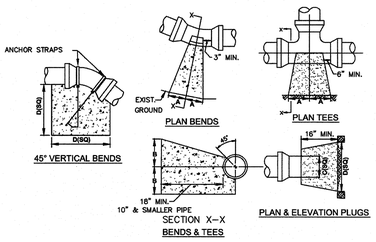

SIZE	90° BENDS A	90° BENDS B	45° BENDS A	45° BENDS B	22 1/2° BENDS A	22 1/2° BENDS B	TEES/PLUGS A	TEES/PLUGS B	45°VERT. BENDS
3"	8"	6"	5"	6"	3"	7"	6"	8"	27"
4"	8"	9"	5"	8"	3"	11"	6"	9"	28"
6"	14"	11"	9"	9"	8"	8"	12"	9"	36"
8"	16"	16"	12"	12"	10"	13"	14"	13"	42"
10"	18"	22"	15"	14"	14"	16"	18"	15"	50"
12"	20"	28"	18"	17"	16"	16"	22"	18"	62"
14"	26"	29"	21"	19"	18"	18"	26"	20"	72"
16"	33"	29"	25"	21"	20"	21"	32"	21"	83"
18"	40"	30"	28"	24"	22"	23"	36"	24"	88"

NOTES: 1. BASED ON 160 PSI TEST PRESSURE AND 2000 PSF SOIL BEARING CAPACITY.
2. ALL BEARING SURFACES TO BE CARRIED TO UNDISTURBED GROUND.
3. USE MEG-A-LUG (PREFERRED) IN LIEU OF BLOCKING AND RODDING.

THRUST BLOCK DETAIL

NOT TO SCALE

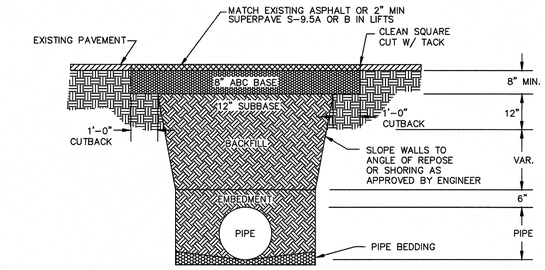

NOTES:
1. BACKFILL SHALL BE SUITABLE MATERIAL THAT IS FREE FROM HEAVY CLAY, GUMBOS, DEBRIS, ORGANICS AND LITTLE TO NO EXCESSIVE MOISTURE.
2. SELECT BACKFILL MAY BE SUBSTITUTED OR REQUIRED BY CITY TO ACHIEVE COMPACTION, (I.E. #57, ABC, CRUSHED LIMESTONE, CLEAN SAND, FLOWABLE FILL, ETC).
3. 8-INCH OF ABC BASE MATERIAL SHALL BE USED ON CITY STREETS.
4. BACKFILL AND BASE MATERIALS SHALL BE COMPACTED 12" MINIMUM LIFTS
5. SOIL SHALL BE COMPACTED BY A MECHANIZED TAMPER (I.E JUMPING JACK), HOWEVER, VIBRATORY ROLLERS > 18" WIDTH MAY BE USED FOR LARGER EXCAVATIONS. THE PLATE TAMP METHOD SHALL NOT BE USED.
6. ALL APPROVED CASTINGS SHALL BE SET FLUSH TO GRADE AND SUPPORTED IF APPLICABLE.
7. ABC BASE AND SUBBASE COMPACTED TO 98% AND BACKFILL AND EMBEDMENT COMPACTED TO 90% AS DETERMINED BY THE MODIFIED PROCTOR AASHTO METHOD T-99.
8. 1-FOOT CUTBACKS OF ASPHALT SHALL BE PREPARED ON UNDISTURBED SOIL. MINIMUM ASPHALT DENSITY IS 90%.

PAVEMENT REPAIR WHERE PIPE INSTALLED

(FOR PRIVATE ROADS AND PAVED AREAS;
CONTRACTOR TO MEET MIN. REQUIREMENTS AS DEFINED BY RIGHT-OF-WAY OWNER FOR PUBLIC ROAD REPAIRS)

NOT TO SCALE

NOTE:
PAVEMENT WIDTH AND LOCATION IN R/W VARIES. SEE PLAN FOR INDIVIDUAL LOCATION.

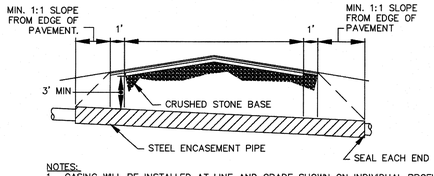

NOTES:
1. CASING WILL BE INSTALLED AT LINE AND GRADE SHOWN ON INDIVIDUAL PROFILE FOR EACH CROSSING. BORING/JACKING TO LINE AND GRADE IS REQUIRED.
2. TRACER WIRE SHALL BE CONTINUED THROUGH CASING

TYPICAL BORING/JACKING DETAIL

NOT TO SCALE

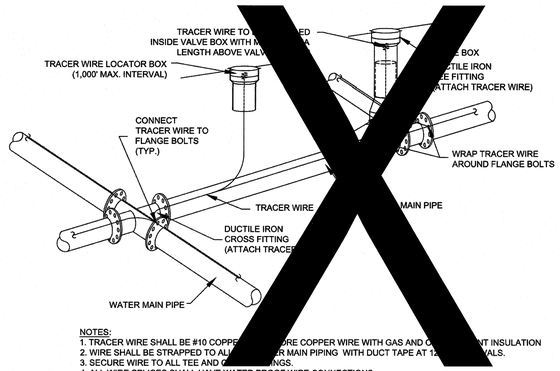

NOTES:
1. TRACER WIRE SHALL BE #10 COPPE RE COPPER WIRE WITH GAS AND O NT INSULATION
2. WIRE SHALL BE STRAPPED TO AL R MAIN PIPING WITH DUCT TAPE AT 12 VALS.
3. SECURE WIRE TO ALL TEE AND G NGS.
4. ALL WIRE SPLICES SHALL HAVE WATER PROOF WIRE CONNECTIONS.

TRACER WIRE DETAIL

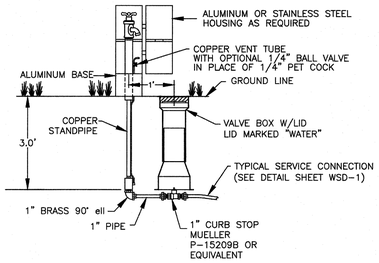

SAMPLING STATION

NOT TO SCALE

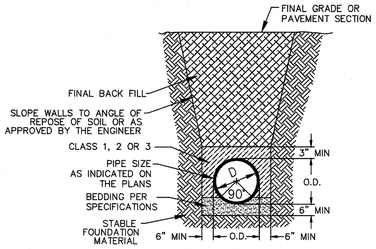

CL 50 DUCTILE IRON DR 18 PVC PIPE TRENCH DETAIL

NOT TO SCALE

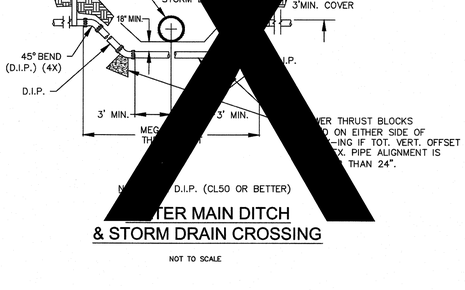

ER MAIN DITCH & STORM DRAIN CROSSING

NOT TO SCALE

GENERAL NOTES:

1. NO EXCAVATED MATERIAL SHALL BE PLACED IN ANY STREAM, DITCH OR DRAINAGE-WAY.
2. THE CONTRACTOR IS RESPONSIBLE FOR LOCATING ALL UNDERGROUND UTILITIES BEFORE ANY CONSTRUCTION BEGINS.
3. THE CONTRACTOR IS RESPONSIBLE FOR TEMPORARY SEDIMENT AND EROSION CONTROL MEASURES WHILE CONSTRUCTION IS IN PROGRESS.
4. THE CONTRACTOR IS RESPONSIBLE FOR STABILIZATION OF ALL DISTURBED AREAS.
5. THE CONTRACTOR IS RESPONSIBLE FOR LAY DOWN & STOCKPILE AREAS (TO ARRANGE AND ENSURE COMPLIANCE WITH ALL LOCAL AND STATE REGULATIONS).

THE DETAILS SHOWN HEREON SUPERCEDE CFPUA WRITTEN TECHNICAL SPECIFICATIONS VERSIONS 1.00 - 1.04

REV:	DESCRIPTION:	DATE:

CFPUA WATER DISTRIBUTION SYSTEM

STANDARD DETAILS

CAPE FEAR PUBLIC UTILITY AUTHORITY
235 GOVERNMENT CENTER DRIVE
WILMINGTON, NC 28403
OFFICE: (910)332-6560
Stewardship. Sustainability. Service.

DATE: 1/9/12
SCALE: N/A
DRAWN BY: CFPUA
CHECKED BY: CFPUA
PROJECT NO.:

SHEET NO: WSD-2

Approved Construction Plan

	Name	Date
Planning		
Traffic		
Fire		

STORMWATER MANAGEMENT PLAN
APPROVED
CITY OF WILMINGTON
ENGINEERING DEPARTMENT
DATE _____ PERMIT #_____
SIGNED _____

For each open utility cut of City streets, a $325 permit shall be required from the City prior to occupancy and/or project acceptance.

1 inch

NHRMC OUTPATIENT CARDIOLOGY CENTER

1415 PHYSICIANS DRIVE
WILMINGTON NC, 28402

LS3P ASSOCIATES LTD.
2528 INDEPENDENCE BLVD. SUITE 200
WILMINGTON, NORTH CAROLINA 28412
TEL. 910.790.9901 FAX 910.790.3111
WWW.LS3P.COM

NORTH CAROLINA PROFESSIONAL ENGINEER SEAL 025503 RICHARD A. MOORE 6/18/13

REVISIONS:

No.	Description	Date
0	DESIGN DEVELOPMENT	02/27/2013
1	TRC COMMENT REVISIONS	04/17/2013
2	TRC COMMENT REVISIONS	06/13/2013

PROJECT: 04853-0015
DATE: 11 JUNE 2013
DRAWN BY: EEM
CHECKED BY: RAM

UTILITY DETAILS

CU-506

SOLUTIONS THROUGH LISTENING
SERVICE BY DESIGN
DESIGN DEVELOPMENT

S:\4853\0015\80-Drawings\CFPUA_Details_48530015.dwg, 6/13/2013 2:48:34 PM, \\wil-print-srv\HP_7100

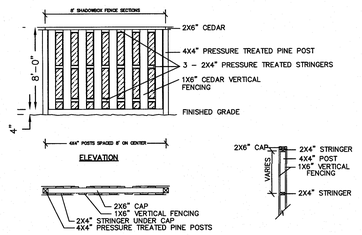

SHADOWBOX FENCE DETAIL

NOT TO SCALE

NOTE: FOUNDATIONS FOR THE FENCE POSTS SHALL BE DESIGNED BY THE FENCE CONTRACTOR

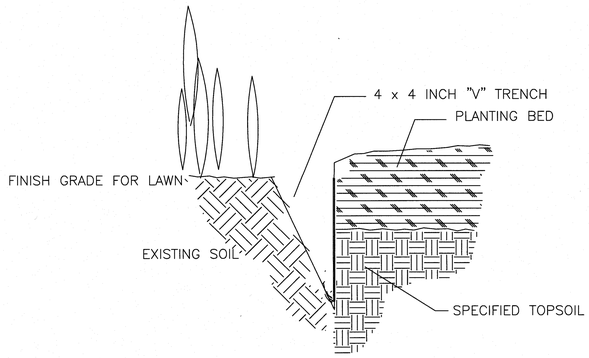

BED EDGING DETAIL

NO SCALE

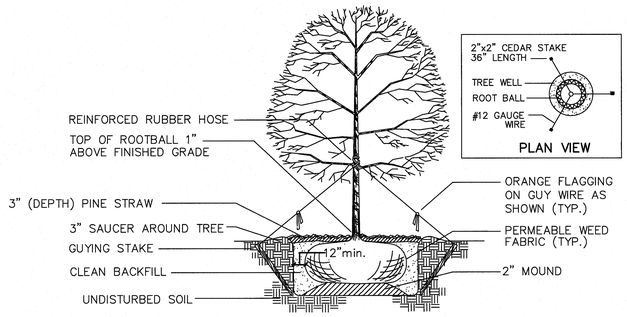

TREE PLANTING DETAIL

NO SCALE

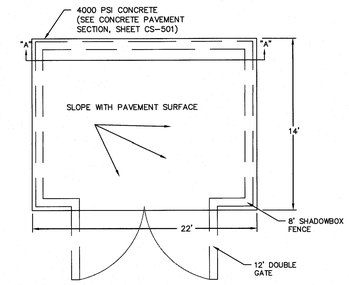

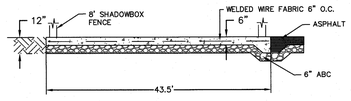

DUMPSTER PAD

NOT TO SCALE

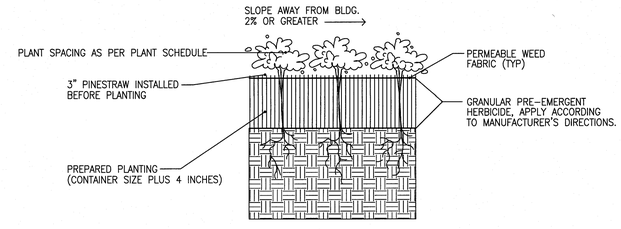

GROUNDCOVER/PERENNIAL PLANTING DETAIL

NO SCALE

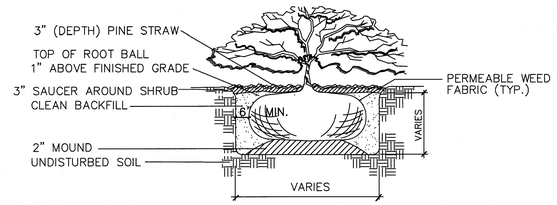

SHRUB PLANTING DETAIL

NO SCALE

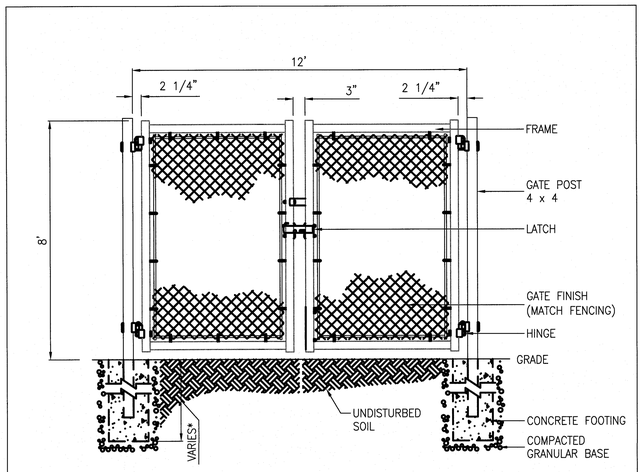

*NOTE: FOOTING DEPTH SUBJECT TO LOCAL CODES AND CONDITIONS.

ELEVATION

DUMPSTER GATES

NOT TO SCALE

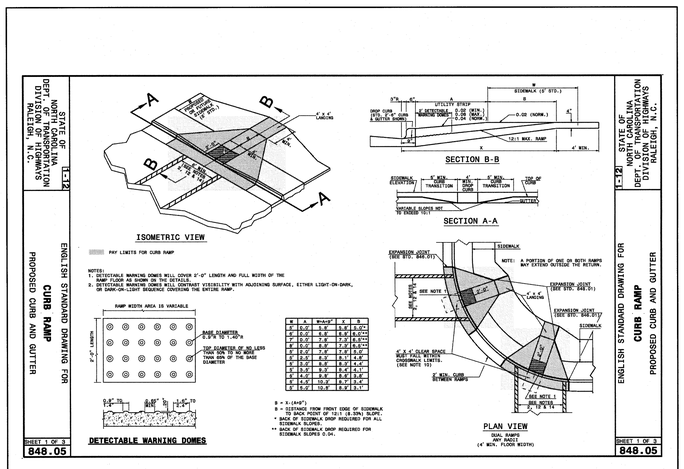

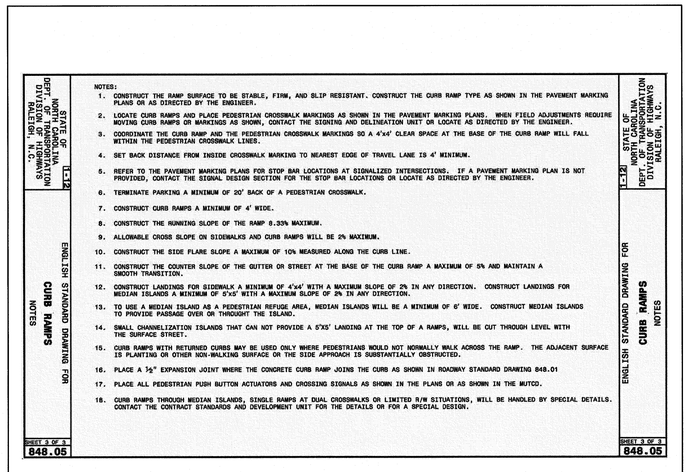

Approved Construction Plan		
	Name	Date
Planning		
Traffic		
Fire		

For each open utility cut of City streets, a $325 permit shall be required from the City prior to occupancy and/or project acceptance.

1 inch

STORMWATER MANAGEMENT PLAN
APPROVED
CITY OF WILMINGTON
ENGINEERING DEPARTMENT
DATE _____ PERMIT # _____
SIGNED _____

NHRMC OUTPATIENT CARDIOLOGY CENTER

1415 PHYSICIANS DRIVE
WILMINGTON NC, 28402

LS3P ASSOCIATES LTD.
2528 INDEPENDENCE BLVD. SUITE 200
WILMINGTON, NORTH CAROLINA 28412
TEL. 910.790.9901 FAX 910.790.3111
WWW.LS3P.COM

NORTH CAROLINA REGISTERED LANDSCAPE ARCHITECT No. 460 MARGARET A. GRAY
06/13/13

REVISIONS:

No.	Description	Date
0	DESIGN DEVELOPMENT	02/27/2013
1	TRC COMMENT REVISIONS	04/17/2013
2	TRC COMMENT REVISIONS	06/13/2013

PROJECT: 04853-0015
DATE: 11 JUNE 2013
DRAWN BY: EEM
CHECKED BY: RAM

LANDSCAPE DETAILS

CL-501

SOLUTIONS THROUGH LISTENING

SERVICE BY DESIGN

DESIGN DEVELOPMENT

S:\4853\00\05\06-Drawings\Details_4853005.dwg, 6/13/2013 11:58:08 PM, \\wil-print-svr\XP_7100