2543 CAROLINA BEACH ROAD
WILMINGTON, NC

STATE SITE CODE: 32-0062
GBL NUMBER: 195500287324
CSD PROJECT NUMBER: MCD-1216

VICINITY MAP

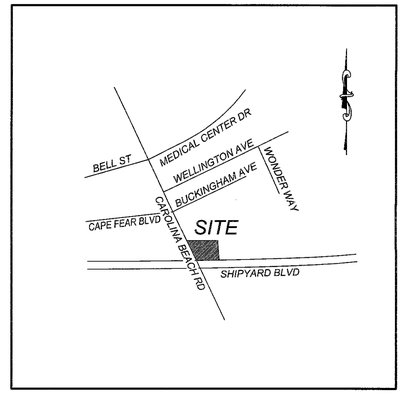

SITE INFORMATION	
SITE ADDRESS:	2543 CAROLINA BEACH ROAD
OWNER / CLIENT:	McDONALD'S USA, LLC 4601 SIX FORKS ROAD SUITE 200 RALEIGH, N.C. 27609 TELEPHONE: (919) 876-9716 FAX: (919) 326-4215
DESIGNER:	COMMERCIAL SITE DESIGN, PLLC 8312 CREEDMOOR ROAD RALEIGH, NORTH CAROLINA 27613 TEL: (919) 848-6121, FAX: (919) 848-3741
ZONING:	CS (COMMERCIAL SERVICE)
CAMA LAND USE:	URBAN
EXISTING USE:	RESTAURANT W/ 1 DRIVE THRU AISLE
PROPOSED USE:	RESTAURANT W/ DRIVE-THRU
BUILDING SETBACKS: FRONT ..... INTERIOR SIDE ..... CORNER SIDE ..... REAR ..... LANDSCAPE SETBACKS: FRONT..... CORNER SIDE	 35 FEET 7 FEET 35 FEET 15 FEET 25 FEET AVERAGE (12.5' MIN., 37.5' MAX.) 12.5 FEET AVERAGE
PROPOSED BUILDING SETBACKS: FRONT ..... INTERIOR SIDE..... CORNER SIDE.....	 52 FEET 57 FEET 83 FEET
PARKING REQUIREMENTS:	MINIMUM: 1 SPACE PER 80 SF GFA (MINUS KITCHEN & BATHROOMS) =3,000 SF / 80 = 38 MINIMUM MAXIMUM: 1 SPACE PER 65 SF GFA (MINUS KITCHEN & BATHROOMS)= 3000 SF / 65 = 46 MAXIMUM
EXISTING PARKING SPACES:	57 REGULAR SPACES 2 HANDICAP SPACES 59 TOTAL SPACES
PARKING PROVIDED:	43 REGULAR SPACES 2 HANDICAP SPACES 45 TOTAL SPACES
BICYCLE PARKING REQUIRED:	5
BICYCLE PARKING PROVIDED:	5
SITE AREA: DISTURBED AREA: NEWLY BUILT UPON AREA: EXISTING IMPERVIOUS AREA: PROPOSED IMPERVIOUS AREA:	47,313 SF OR 1.09 ACRES 52,454 SF OR 1.20 ACRES 16,802 SF OR 0.39 ACRES 39,583 SF OR 0.91 ACRES OR 84% 36,035 SF OR 0.83 ACRES OR 76%
EXISTING BUILDING AREA:	4,259 SF
PROPOSED BUILDING AREA:	4,500 SF
MAXIMUM BUILDING HEIGHT:	35 FEET
PROPOSED BUILDING HEIGHT:	18.80 FEET
TREES REQUIRED DUE TO DISTURBED AREA	15 TREES / 1 ACRE OF DISTURBANCE 1.09 ACRES OF DISTURBANCE = 17 TREES

CONTACTS:

PLAN REVIEW:
CITY OF WILMINGTON PLANNING DEPARTMENT
WILMINGTON, NC
CONTACT: Dawn Snotherly
PHONE: (910) 341-5815
EMAIL: dawn.snotherly@wilmingtonnc.gov

SIGNAGE:
CITY OF WILMINGTON PLANNING DEPARTMENT
WILMINGTON, NC
CONTACT: KATHRYN THURSTON
PHONE: (910) 341-3249
EMAIL: kathryn.thurston@wilmingtonnc.gov

BUILDING & INSPECTIONS:
NEW HANOVER COUNTY INSPECTIONS
WILMINGTON, NC
CONTACT: REGGIE HUCKS
PHONE: (910) 798-7450
EMAIL: rhucks@nhcgov.com

STREET & HIGHWAY DATA:
NCDOT
WILMINGTON, NC
CONTACT: ALAN HANCOCK / TARA MURPHY
PHONE: (910) 251-2655 & (910) 341-4661
EMAIL: alaw@ncdot.gov
tara.murphy@wilmingtonnc.gov

WATER:
CAPE FEAR PUBLIC UTILITY AUTHORITY
WILMINGTON, NC
CONTACT: BERNICE JOHNSON
PHONE: (910) 332-6620
EMAIL: bernice.johnson@cfpua.org

STORM SEWER:
CITY OF WILMINGTON ENGINEERING DEPARTMENT
WILMINGTON, NC
CONTACT: ROB GORDON
PHONE: (910) 341-5856
EMAIL: rob.gordon@wilmingtonnc.gov

SANITARY SEWER:
CAPE FEAR PUBLIC UTILITY AUTHORITY
WILMINGTON, NC
CONTACT: BERNICE JOHNSON
PHONE: (910) 332-6620
EMAIL: bernice.johnson@cfpua.org

FIRE:
CITY OF WILMINGTON FIRE DEPARTMENT
WILMINGTON, NC
CONTACT: CHRIS ELROD
PHONE: (910) 343-3917
EMAIL: chris.elrod@wilmingtonnc.gov

HVAC:
NEW HANOVER COUNTY INSPECTIONS
WILMINGTON, NC
CONTACT: REGGIE HUCKS
PHONE: (910) 798-7450
EMAIL: rhucks@nhcgov.com

GAS:
PIEDMONT NATURAL GAS
CONTACT: CARL PAQUET
PHONE: (910) 251-2818
EMAIL: carl.paquet@piedmontng.com

ELECTRIC:
PROGRESS ENERGY
CONTACT: BELINDA ELKINS
PHONE: (910) 350-3402
EMAIL: belinda.hall@piedmontng.com

TELEPHONE:
CENTURYLINK
PHONE: (866) 660-1579

HEALTH:
NEW HANOVER COUNTY ENVIRONMENTAL HEALTH
WILMINGTON, NC
CONTACT: SUSAN WRIGHT
PHONE: (910) 798-6580
EMAIL: swright@nhcgov.com

DWG. NUMBER	DRAWING DESCRIPTION
C-1	COVER SHEET
C-2	TOPOGRAPHIC SURVEY
C-2a	DEMOLITION PLAN
C-3	SITE PLAN
C-4	ADA ACCESSIBILITY PLAN AND DETAILS
C-5	GRADING/EROSION CONTROL PLAN
C-5a	NPDES STABILIZATION PLAN
C-6	UTILITY PLAN
C-7	DETAILS
C-8	DETAILS
C-9	DETAILS
C-9a	DETAILS
C-10	MENU BOARD DETAILS
C-11	SD DETAILS
L-1	LANDSCAPE PLAN
L-2	LIGHTING PLAN
TC-1	TRASH CORRAL

DWG. NUMBER	5th Revision–City of Wilmington Comments #4 & NCDOT 06-24-13	4th Revision–City of Wilmington Comments #3 & NCDOT 05-15-13	3rd Revision–City of Wilmington Comments #2 & NCDOT 03-28-13	2nd Revision–City of Wilmington Comments 1-16-12	1st–PERMIT ISSUE 12-12-12
C-1	■	■	■	■	■
C-2	□	□	□	■	■
C-2a	■	■	■	■	■
C-3	■	■	■	■	■
C-4	□	■	□	■	■
C-5	■	■	■	■	■
C-5a	□	□	■	■	■
C-6	□	□	■	■	■
C-7	□	□	■	■	■
C-8	■	■	□	■	■
C-9	□	□	■	■	■
C-9a	□	□	■		
C-10	□	□	□	■	■
C-11	□	□	□	■	■
L-1	■	■	■	■	■
L-2	□	□	■	■	■
TC-1	□	□	■		

CITY OF WILMINGTON
NORTH CAROLINA
Public Services • Engineering Division
APPROVED STORMWATER MANAGEMENT PLAN
Date:_____ Permit #_____
Signed: _____

Approved Construction Plan

	Name	Date
Planning		
Traffic		
Fire		

CONSTRUCTION SITE DESIGN CORPORATION
P-0286
NORTH CAROLINA
NATIONAL, NORTH CAROLINA

7/14/13

REV	DATE	DESCRIPTION	BY	ISSUE/REF
1	12-12-12	PERMIT ISSUE		
2	1-16-13	CITY OF WILMINGTON COMMENTS	JWR	
3	03-28-13	CITY OF WILMINGTON COMMENTS #2 & NCDOT	STH	
4	05-13-13	CITY OF WILMINGTON COMMENTS #3 & NCDOT	JWR	
5	06-24-13	CITY OF WILMINGTON COMMENTS #4 & NCDOT	JWR	

COMMERCIAL SITE DESIGN
(919) 848-6121, FAX: (919) 848-3741
WWW.CSITEDESIGN.COM
8312 CREEDMOOR ROAD
RALEIGH, NORTH CAROLINA 27613

McDonald's®

THESE PLANS AND SPECIFICATIONS ARE THE PROPERTY OF McDONALDS CORPORATION AND SHALL NOT BE REPRODUCED WITHOUT THEIR WRITTEN PERMISSION.

OFFICE: RALEIGH REGION
ADDRESS: 4601 SIX FORKS ROAD - SUITE 200 - RALEIGH, N.C. 27609

PLAN APPROVAL

SIGNATURE (2 REQUIRED)	DATE
GENERAL MANAGER	
REGIONAL DEV. DIRECTOR	
REGIONAL CONSTRUCTION MNGR.	
REGIONAL REAL ESTATE MNGR.	

CO-SIGN SIGNATURES

AREA CONSTRUCTION MNGR.	
AREA REAL ESTATE MNGR.	

STATUS	DATE	BY
FINAL	-	-
PLAN CHECKED	-	-
AS-BUILT	-	-

C-1
COVER SHEET

X:\MCD - McDonalds\1216 - Wilmington, NC @ Carolina Beach Rd 32-0062\CAD\MCD1216-CS.dwg, 7/16/2013 10:36:58 AM, chrisn

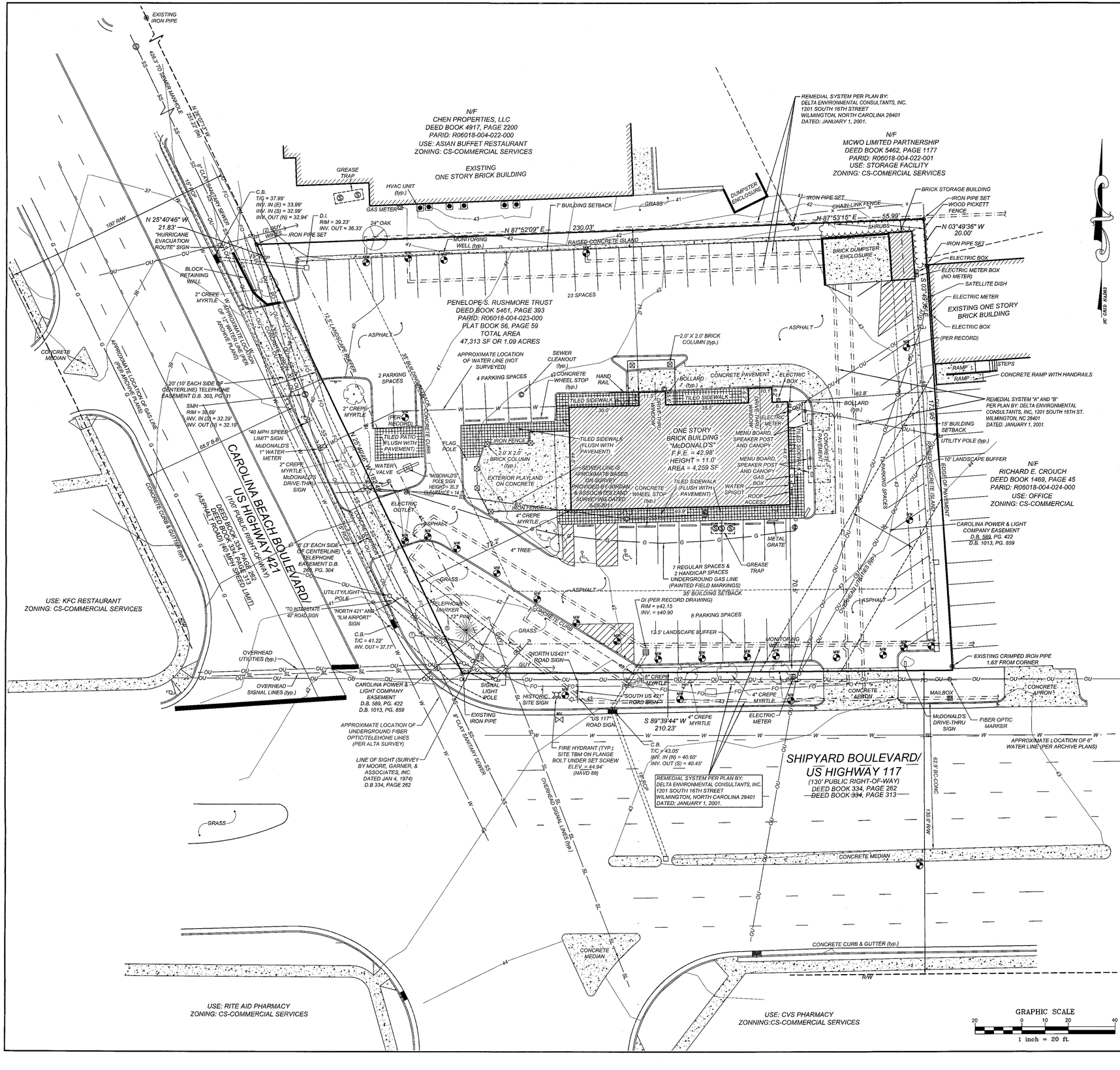

REV	DATE	DESCRIPTION	BY	ISSUE/RET
1	12-12-12	PERMIT ISSUE	JWR	
2	1-16-13	CITY OF WILMINGTON COMMENTS	STH	
3	03-28-13	CITY OF WILMINGTON COMMENTS #2 & NCDOT	JWR	
4	05-13-13	CITY OF WILMINGTON COMMENTS #3 & NCDOT	JWR	
5	06-24-13	CITY OF WILMINGTON COMMENTS #4 & NCDOT	JWR	

COMMERCIAL SITE DESIGN
(919) 848-4321, FAX: (919) 848-3741
WWW.CSITEDESIGN.COM
8312 CREEDMOOR ROAD
RALEIGH, NORTH CAROLINA 27615

THESE PLANS AND SPECIFICATIONS ARE THE PROPERTY OF McDONALD'S CORPORATION. AND SHALL NOT BE REPRODUCED WITHOUT THEIR WRITTEN PERMISSION.

McDonald's
RALEIGH REGION
4901 SIX FORKS ROAD - SUITE 200 - RALEIGH, N.C. 27609

LEGEND

- CALCULATED POINT
- EXISTING IRON PIPE
- BORE HOLE
- IRON PIPE SET
- SANITARY SEWER MANHOLE
- SANITARY SEWER CLEANOUT
- WATER VALVE
- WATER METER
- FIRE HYDRANT
- TELEPHONE PEDESTAL
- TELEPHONE MANHOLE
- ELECTRIC BOX
- LIGHT POLE
- POWER POLE
- CURB INLET
- STORM DRAINAGE MANHOLE
- YARD INLET
- STORM DRAIN (OU)
- OVERHEAD UTILITIES (OU)
- UNDERGROUND ELECTRIC (UE)
- UNDERGROUND TELEPHONE (UT)
- WATER LINE (W)
- SANITARY SEWER LINE (SS)
- GAS LINE (G)
- FENCE LINE (X)
- FIBER OPTIC LINE (FO)

AC = ACRES
ACSM = AMERICAN CONGRESS ON SURVEYING AND MAPPING
ALTA = AMERICAN LAND TITLE ASSOCIATION
B.M. = BOOK OF MAPS
EIP = EXISTING IRON PIPES
ELEV = ELEVATION
FIRM = FLOOD INSURANCE RATE MAP
GPS = GLOBAL POSITIONING SYSTEM
HUD = HOUSING URBAN DEVELOPMENT
HYD = FIRE HYDRANT
INV = INVERT
IPS = IRON PIPE SET
LLC = LIMITED LIABILITY COMPANY
MPH = MILES PER HOUR
MSL = MEAN SEA LEVEL
N/F = NOW OR FORMERLY
NSPS = NATIONAL SOCIETY OF PROFESSIONAL SURVEYORS
NTS = NOT TO SCALE
R.C.P. = REINFORCED CONCRETE PIPE
R/W = RIGHT-OF-WAY
SF = SQUARE FOOT
S.R. = STATE ROAD
TBM = TEMPORARY BENCH MARK
TWSP = TOWNSHIP
TYP = TYPICAL

SURVEY INFORMATION

PREPARED BY: COMMERCIAL SITE DESIGN, PLLC
8312 CREEDMOOR ROAD
RALEIGH, NORTH CAROLINA 27613
PHONE: (919) 848-6121
DATE OF ORIGINAL FIELD SURVEY: OCTOBER 10, 2012 DATE OF MAP: NOVEMBER 6, 2012

PLAN SCALE: 1" = 20'

STREET ADDRESS
2543 CAROLINA BEACH ROAD

CITY	STATE
WILMINGTON	NORTH CAROLINA

COUNTY
NEW HANOVER

TAX PARCEL NUMBER	LOCATION CODE NUMBER
R06018-004-023-000	32-0062

CSD FILENAME: MCD1216-TS

PROFESSIONAL SITE DESIGNER REGISTERED CORPORATION NORTH CAROLINA P-0268

PROFESSIONAL ENGINEER SEAL 24501 NORTH CAROLINA 7/16/13

PLAN APPROVAL

SIGNATURE (2 REQUIRED)	DATE
REGIONAL MGR.	
REGIONAL DEV. DIRECTOR	
REGIONAL CONSTRUCTION MGR.	
REGIONAL REAL ESTATE MGR.	

CO-SIGN SIGNATURES

AREA CONSTRUCTION MGR.	
CONTRACTOR	

OFFICE
ADDRESS

STATUS	DATE	BY
FINAL	-	-
PLAN CHECKED	-	-
AS-BUILT	-	-

C-2
TOPOGRAPHIC SURVEY

DEMOLITION KEYNOTES

1. REMOVE EXISTING ITEM, COORDINATE REMOVAL WITH APPLICABLE FEDERAL, STATE, COUNTY, CITY, LOCAL AGENCIES OR LOCAL UTILITY COMPANY.
2. RELOCATE EXISTING ITEM, COORDINATE RELOCATION WITH APPLICABLE FEDERAL, STATE, COUNTY, CITY, LOCAL AGENCIES OR LOCAL UTILITY COMPANY.
3. ITEM TO REMAIN.

ENVIRONMENTAL NOTE:

EXISTING ENVIRONMENTAL REMEDIATION SYSTEM OF MONITORING WELLS, PIPES, AND OTHER APPERTENANCES ARE TO REMAIN. CONTRACTOR TO USE CAUTION WHEN PERFORMING ANY CONSTRUCTION OR DEMOLITION ACTIVITIES IN THE VICINITY OF THESE FEATURES. CONTRACTOR SHALL BE RESPONSIBLE FOR THE REPAIR OF ANY DAMAGE TO SYSTEM RESULTING FROM SITE CONSTRUCTION. ADJUST MONITORING WELL RIM ELEVATIONS TO PROPOSED FINAL GRADE.

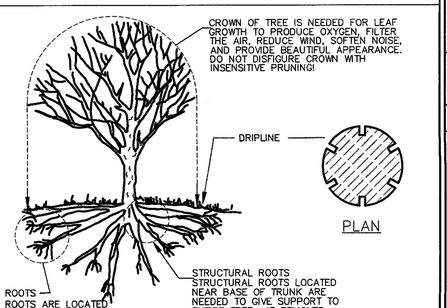

TREE PROTECTION DURING CONSTRUCTION

1. DO NOT COMPACT SOIL BENEATH TREES. NO VEHICLE SHALL BE ALLOWED TO PARK UNDER TREES. NO HEAVY MATERIALS SHALL BE STORED BENEATH TREES. RESULTS OF COMPACTION CAUSE WATER AND AIR NOT TO REACH THE ROOTS AND THE TREE WILL DIE. THESE "FEEDING ROOTS" OCCUR WELL AWAY FROM THE BASE OF THE TREE TO THE EDGE OF THE OVERHEAD BRANCH CANOPY. DAMAGING THE BARK WITH LAWNMOWERS, CONSTRUCTION EQUIPMENT, OR ANYTHING ELSE IS PROHIBITED. APROTECTIVE BARRIER SHOULD PREVENT DAMAGE FROM OCCURING DURING CONSTRUCTION.
2. NO CUTTING OF LARGE STRUCTURAL ROOTS LOCATED NEAR THE BASE OF THE TRUNK. THESE ARE ESSENTIAL IN SUPPORTING THE TREE AND HOLDING IT UPRIGHT IN HIGH WINDS. REMOVAL OF THESE ROOTS ALONG ONE SIDE IS OFTEN DONE BECAUSE OF A WALK, PAVING OR BUILDING WHICH IS BEING CONSTRUCTED.
3. AVOID CUT AND FILL WITHIN DIAMETER OF TREE CROWN DURING EXCAVATION.

METHOD OF TREE PROTECTION DURING CONSTRUCTION
SD 15-09
NOT TO SCALE

LEGEND

▲	CALCULATED POINT	AC =	ACRES
◉	EXISTING IRON PIPE	ACSM =	AMERICAN CONGRESS ON SURVEYING AND MAPPING
◆	BORE HOLE	ALTA =	AMERICAN LAND TITLE ASSOCIATION
○	IRON PIPE SET	B.M. =	BOOK OF MAPS
Ⓢ	SANITARY SEWER MANHOLE	EIP =	EXISTING IRON PIPES
Ⓒ	SANITARY SEWER CLEANOUT	ELEV =	ELEVATION
⋈	WATER VALVE	FIRM =	FLOOD INSURANCE RATE MAP
⊠	WATER METER	GPS =	GLOBAL POSITIONING SYSTEM
⋇	FIRE HYDRANT	HUD =	HOUSING URBAN DEVELOPMENT
◫	TELEPHONE PEDESTAL	HYD =	FIRE HYDRANT
Ⓣ	TELEPHONE MANHOLE	INV =	INVERT
◧	ELECTRIC BOX	IPS =	IRON PIPE SET
☼	LIGHT POLE	LLC =	LIMITED LIABILITY COMPANY
⚡	POWER POLE	MPH =	MILES PER HOUR
▭	CURB INLET	MSL =	MEAN SEA LEVEL
Ⓓ	STORM DRAINAGE MANHOLE	N/F =	NOW OR FORMERLY
□	YARD INLET	NSPS =	NATIONAL SOCIETY OF PROFESSIONAL SURVEYORS
◕	EXISTING MONITORING WELL	NTS =	NOT TO SCALE
X	TREE TO BE REMOVED	R.C.P. =	REINFORCED CONCRETE PIPE
═══	STORM DRAIN	R/W =	RIGHT-OF-WAY
OU	OVERHEAD UTILITIES	SF =	SQUARE FOOT
UE	UNDERGROUND ELECTRIC	S.R. =	STATE ROAD
UT	UNDERGROUND TELEPHONE	TBM =	TEMPORARY BENCH MARK
W	WATER LINE	TWSP =	TOWNSHIP
SS	SANITARY SEWER LINE	TYP =	TYPICAL
G	GAS LINE		
X	FENCE LINE		
FO	FIBER OPTIC LINE		
	SAWCUT LINE		
TP	TREE PROTECTION FENCE		

SURVEY INFORMATION

PREPARED BY: COMMERCIAL SITE DESIGN, PLLC
8312 CREEDMOOR ROAD
RALEIGH, NORTH CAROLINA 27613
PHONE: (919) 848-6121
DATE OF ORIGINAL FIELD SURVEY: OCTOBER 10, 2012 DATE OF MAP: NOVEMBER 6, 2012

PLAN SCALE: 1" = 20'

STREET ADDRESS: 2543 CAROLINA BEACH ROAD

CITY	STATE
WILMINGTON	NORTH CAROLINA

COUNTY: NEW HANOVER

TAX PARCEL NUMBER	LOCATION CODE NUMBER
R06018-004-023-000	32-0062

CSD FILENAME: MCD1216-DP

REV	DATE	DESCRIPTION	BY	ISSUED?
1	12-12-12	PERMIT ISSUE	JWR	
2	1-16-13	CITY OF WILMINGTON COMMENTS	STH	
3	03-28-13	CITY OF WILMINGTON COMMENTS #2 & NCDOT	JWR	
4	05-13-13	CITY OF WILMINGTON COMMENTS #3 & NCDOT	JWR	
5	06-24-13	CITY OF WILMINGTON COMMENTS #4 & NCDOT	JWR	

COMMERCIAL SITE DESIGN
8312 CREEDMOOR ROAD
RALEIGH, NORTH CAROLINA 27613
(919) 848-6121, FAX: (919) 848-7741
WWW.CSITEDESIGN.COM

THESE PLANS AND SPECIFICATIONS ARE THE PROPERTY OF McDONALD'S CORPORATION AND SHALL NOT BE REPRODUCED WITHOUT THEIR WRITTEN PERMISSION.

McDonald's
RALEIGH REGION
4801 SIX FORKS ROAD, SUITE 200 - RALEIGH, N.C. 27609
OFFICE
ADDRESS

PLAN APPROVAL

	DATE
SIGNATURE (2 REQUIRED)	
REGIONAL MGR.	
REGIONAL DEV. DIRECTOR	
REGIONAL CONSTRUCTION MGR.	
REGIONAL REAL ESTATE MGR.	

CO-SIGN SIGNATURES

AREA CONSTRUCTION MGR.	
CONTRACTOR	

STATUS	DATE	BY
FINAL	-	-
PLAN CHECKED	-	-
AS-BUILT	-	-

C-2a
DEMOLITION PLAN

GRAPHIC SCALE
20 0 10 20 40
1 inch = 20 ft.

SITE KEY NOTES:

1. CONSTRUCT 2' SPILLING CURB AND GUTTER WITH 6" CURB PER DETAIL SHEET
1a. CONSTRUCT 2' SPILLING CURB AND GUTTER WITH 4" CURB AT ALL HEAD-IN PARKING STALLS PER DETAIL SHEET
2. CONSTRUCT 2' CATCHING CURB AND GUTTER WITH 6" CURB PER DETAIL SHEET
2a. CONSTRUCT 2' CATCHING CURB AND GUTTER WITH 4" CURB AT ALL HEAD-IN PARKING STALLS PER DETAIL SHEET
3. ASPHALT PAVEMENT PER SOILS REPORT SPECIFICATIONS
4. TRANSITION FROM ASPHALT TO CONCRETE PAVEMENT PER DETAIL SHEET
5. OVERLAY EXISTING ASPHALT TO ACHIEVE PROPOSED GRADE, SEE SHEET C-5
6. CONSTRUCT STANDARD CONCRETE H.C. RAMP PER DETAIL SHEET & NCDOT DETAIL 848.05
7. CONSTRUCT FLUSH CONCRETE H.C. RAMP PER DETAIL SHEET
8. DELIVERY RAMP
9. INSTALL HANDICAP SIGNAGE IN STEEL PIPE BOLLARD WITH IDEAL SHIELD COVER PER ADA ACCESSIBILITY PLAN AND DETAIL SHEET
9a. INSTALL VAN ACCESSABLE HANDICAP SIGNAGE IN STEEL PIPE BOLLARD WITH IDEAL SHIELD COVER PER ADA ACCESSIBILITY PLAN AND DETAIL SHEET
10. PAINT HANDICAP SYMBOL
11. PAINT TRAFFIC ARROWS PER DETAIL SHEET
12. PAINT 4" WIDE STRIPE, WHITE
13. PAINT 4" WIDE STRIPES, WHITE @ 45° 2'-0" O.C.
14. NOT USED
15. PAINTED "DRIVE-THRU" DIRECTIONAL ARROW, YELLOW, COORDINATE WITH McDONALD'S CONSTRUCTION MANAGER
15a. PAINTED DIRECTIONAL ARROW AT DRIVE THRU LANE AND MERGE POINT, WHITE THERMOPLASTIC, COORDINATE WITH McDONALDS CONSTRUCTION MANAGER
16. PAINT 6" WIDE WHITE STRIPE ON ASPHALT FROM EDGE OF CONCRETE DRIVE-THRU LANE
17. PAINT "THANK YOU" PER DETAIL SHEET
18. CONSTRUCT TILE CONCRETE WALK WITH TILE SURFACE PER McDONALD'S SPECIFICATIONS
19. CONSTRUCT BROOM FINISH ACCESS CONCRETE SIDEWALK PER DETAIL SHEET
20. CONCRETE PAD @ DRIVE-THRU AND HANDICAP SPACES PER McDONALD'S STANDARDS AND SPECIFICATIONS, 10' CONTROL JOINTS, 20' EXPANSION JOINTS OR PER SOILS REPORT SPECIFICATIONS. GENERAL CONTRACTOR TO VERIFY WITH McDONALD'S AREA CONSTRUCTION MANAGER PRIOR TO APPLYING BLACK COLORING (OPTIONAL).
21. CONCRETE PAD FOR GREASE TRAP, SEE PLUMBING PLANS AND McDONALD'S STANDARDS AND SPECIFICATIONS. GENERAL CONTRACTOR TO VERIFY WITH McDONALD'S AREA CONSTRUCTION MANAGER PRIOR TO APPLYING BLACK COLORING (OPTIONAL).
22. CONSTRUCT CONCRETE DUMPSTER PAD PER SOILS REPORT AND McDONALD'S STANDARDS AND SPECIFICATIONS. GENERAL CONTRACTOR TO VERIFY WITH McDONALD'S AREA CONSTRUCTION MANAGER PRIOR TO APPLYING BLACK COLORING (OPTIONAL).
23. PROPOSED FLUME, SEE DETAIL SHEET
24. PROPOSED UTILITY POLE AND POLE MOUNTED TRANSFORMER. (COORDINATE WITH SIZE AND LOCATION WITH POWER COMPANY.
25. REUSE EXISTING DUMPSTER ENCLOSURE
26. EXISTING STORAGE SHED, EXTERIOR FINISH TO MATCH DUMPSTER ENCLOSURE
27. REUSE EXISTING SITE IDENTIFICATION SIGN (CONTRACTOR SHALL COORDINATE WITH SIGN COMPANY AND CONSTRUCTION MANAGER).
28. "PLEASE HAVE MONEY ..." SIGN SUPPLIED BY AND INSTALLED BY SIGN CONTRACTOR
29. DIRECTIONAL SIGNAGE (PER DETAIL SHEET): GALVANIZED ANCHOR BOLTS, (6" ABOVE GRADE), FOOTINGS AND ELECTRICITY BY GENERAL CONTRACTOR, SIGN INSTALLED BY SIGN CONTRACTOR. CONTRACTOR TO COORDINATE WITH MCDONALD'S CONSTRUCTION MANAGER
30. INSTALL "ANY LANE ANYTIME" SIGN, CONTRACTOR SHALL COORDINATE WITH McDONALD'S CONSTRUCTION MANAGER
31. POLE MOUNTED AREA LIGHT(S) SEE LIGHTING PLAN: GALVANIZED ANCHOR BOLTS, (6" ABOVE GRADE), FOOTINGS BY GENERAL CONTRACTOR. POLE INSTALLED BY SIGN CONTRACTOR. CONTRACTOR TO COORDINATE WITH MCDONALD'S CONSTRUCTION MANAGER
32. MENU BOARD (PER DETAIL SHEET): GALVANIZED ANCHOR BOLTS, (6" ABOVE GRADE), FOOTINGS AND ELECTRICITY BY GENERAL CONTRACTOR, SIGN INSTALLED BY SIGN CONTRACTOR. CONTRACTOR TO COORDINATE WITH MCDONALD'S CONSTRUCTION MANAGER
33. VERTICAL PREVIEW "PRE-SELL" BOARD (PER DETAIL SHEET): GALVANIZED ANCHOR BOLTS, (6" ABOVE GRADE), FOOTINGS AND ELECTRICITY BY GENERAL CONTRACTOR, SIGN INSTALLED BY SIGN CONTRACTOR. CONTRACTOR TO COORDINATE WITH MCDONALD'S CONSTRUCTION MANAGER
34. CUSTOMER ORDER DISPLAY WITH DETECTOR LOOP (PER DETAIL SHEET): GALVANIZED ANCHOR BOLTS, (6" ABOVE GRADE), FOOTINGS AND ELECTRICITY BY GENERAL CONTRACTOR, SIGN INSTALLED BY SIGN CONTRACTOR. CONTRACTOR TO COORDINATE WITH MCDONALD'S CONSTRUCTION MANAGER
35. DRIVE-THRU CANOPY (PER DETAIL SHEET): GALVANIZED ANCHOR BOLTS, (6" ABOVE GRADE), FOOTINGS AND ELECTRICITY BY GENERAL CONTRACTOR, SIGN INSTALLED BY SIGN CONTRACTOR. CONTRACTOR TO COORDINATE WITH MCDONALD'S CONSTRUCTION MANAGER
36. THREE 30'-0" FLAG POLES, ALUMINUM FINISH POLE AND FLAG (PER DETAIL SHEET), GALVANIZED ANCHOR BOLTS, (6" ABOVE GRADE), FOOTINGS BY GENERAL CONTRACTOR, POLE INSTALLED BY SIGN CONTRACTOR. CONTRACTOR TO COORDINATE WITH MCDONALD'S CONSTRUCTION MANAGER
37. STEEL PIPE BOLLARD PER DETAIL SHEET
38. HANDRAIL, SEE ARCHITECTURAL PLANS
39. 6" VERTICAL HEADER CURB PER DETAIL SHEET
40. GATEWAY SIGN (PER DETAIL SHEET): GALVANIZED ANCHOR BOLTS, (6" ABOVE GRADE), FOOTINGS AND ELECTRICITY BY GENERAL CONTRACTOR TO COORDINATE WITH McDONALDS CONSTRUCTION MANAGER.
41. CONTRACTOR TO INSTALL "PULL FORWARD" SIGNAGE PER McDONALDS SPECIFICATIONS
42. INSTALL DETECTABLE WARNING SURFACE PER DETAIL
43. MATCH EXISTING CURB AND GUTTER
44. ASPHALT PAVEMENT PER NCDOT STANDARDS AND SPECIFICATIONS: 2" - S9.5B SURFACE, 3" - I190B INTERMEDIATE SURFACE, AND 5" - B25.0B BASE COURSE
45. CONVERT EXISTING TELEPHONE MANHOLE TO TRAFFIC RATED AND ADJUST RIM TO PROPOSED GRADE, CONTRACTOR SHALL COORDINATE WITH UTILITY COMPANY
46. RELOCATE WATER METER, CONDUIT AND VALVES, CONTRACTOR SHALL COORDINATE WITH UTILITY COMPANY
47. RELOCATE EXISTING ROAD SIGN, CONTRACTOR SHALL COORDINATE WITH CITY AND NCDOT
48. RELOCATE UTILITY POLE AND/OR GUY WIRES. CONTRACTOR SHALL COORDINATE WITH UTILITY COMPANY AND CITY TRAFFIC ENGINEER FOR RELOCATION OF CITY OF WILMINGTON / NCDOT TRAFFIC SIGNAL SYSTEM FIBER
49. CONSTRUCT NCDOT CURB AND GUTTER
50. CONSTRUCT 5' CONCRETE SIDEWALK PER NCDOT STANDARDS AND SPECIFICATIONS
51. CONVERT EXISTING SANITARY MANHOLE TO TRAFFIC RATED AND ADJUST RIM TO PROPOSED GRADE, CONTRACTOR SHALL COORDINATE WITH UTILITY COMPANY
52. CONVERT EXISTING STORM CATCH BASIN TO TRAFFIC RATED JUNCTION BOX AND ADJUST RIM TO PROPOSED GRADE, CONTRACTOR SHALL COORDINATE WITH NCDOT
53. NO OBSTRUCTIONS SHALL BE PERMITTED IN THE SPACE BETWEEN THIRTY (30) INCHES AND TEN (10) FEET ABOVE GROUND LEVEL WITHIN THE AREA OF THE TRIANGLE SIGHT DISTANCE.
54. MOUNTABLE CURB ISLAND, PER DETAIL SHEET C-8.
55. PROVIDE 5' CUT OUT OF CURB FOR STORMWATER OVERFLOW
56. BIKE RACK PER DETAIL
57. CONCRETE APRON PER CITY OF WILMINGTON STANDARDS AND SPECIFICATIONS.
58. RELOCATED UTILITY POLE LOCATION. POLES MUST HAVE 30" FROM ANY UNDERGROUND UTILITY. RELOCATE UNDERGROUND UTILITIES OR POSITION POLES AS NECESSARY TO ACOMODATE. CONTRACTOR TO COORDINATE WITH ALL APPLICABLE UTILITY COMPANIES.

PERMANENT THERMOPLASTIC PAVEMENT MARKINGS

MARKING LINES	MARKING SYMBOLS
PA (4" WHITE) EDGE LINE	OC ("ONLY")
PB (4" WHITE) 4" X 10' SKIP	OD (LEFT TURN ARROW)
PC (4" WHITE) 4" X 2' MINISKIP	OE (RIGHT TURN ARROW)
PD (4" WHITE) SOLID LANE LINE	OF (STRAIGHT ARROW)
PI (8" WHITE) SOLID GORE LINE	OG (COMBINATION STRAIGHT/LEFT ARROW)
PJ (8" WHITE) DIAGONAL LINE	OH (COMBINATION STRAIGHT/RIGHT ARROW)
PK (8" WHITE) CROSSWALK LINE	
PC (24" WHITE) STOP BAR	
PE (4" YELLOW) 4" EDGE LINE	
PR (4" YELLOW) 4" X 10' SKIP	
PT (4" YELLOW) SINGLE CENTER LINE	
PU (4" YELLOW) DOUBLE CENTER LINE	
PY (8" YELLOW) DIAGONAL	

PAINT STRIPING NOTES:

1. ALL PAVEMENT MARKINGS SHALL CONFORM TO THE LATEST EDITION OF MUTCD.

ENVIRONMENTAL NOTE:

EXISTING ENVIRONMENTAL REMEDIATION SYSTEM OF MONITORING WELLS, PIPES, AND OTHER APPERTENANCES ARE TO REMAIN. CONTRACTOR TO USE CAUTION WHEN PERFORMING ANY CONSTRUCTION OR DEMOLITION ACTIVITIES IN THE VICINITY OF THESE FEATURES. CONTRACTOR SHALL BE RESPONSIBLE FOR THE REPAIR OF ANY DAMAGE TO SYSTEM RESULTING FROM SITE CONSTRUCTION. ADJUST MONITORING WELL RIM ELEVATIONS TO PROPOSED FINAL GRADE.

CITY OF WILMINGTON GENERAL NOTES:

A. TACTILE WARNING MATS ARE TO BE INSTALLED ON ALL WHEELCHAIR RAMPS.
B. ALL PAVEMENT MARKINGS IN PUBLIC RIGHTS-OF-WAY AND FOR DRIVEWAYS ARE TO BE THERMOPLASTIC AND MEET CITY AND/OR NCDOT STANDARDS. [DETAILS SD-13 COFW TECH STANDARDS].
C. ALL SIGNS AND PAVEMENT MARKINGS IN AREAS OPEN TO PUBLIC TRAFFIC ARE TO MEET MUTCD (MANUAL ON UNIFORM TRAFFIC CONTOL DEVICES) STANDARDS. [DETAIL SD 15-13 COFW TECH STDS].
D. ALL TRAFFIC CONTROL SIGNS AND MARKINGS OFF THE RIGHT-OF-WAY ARE TO BE MAINTAINED BY THE PROPERTY OWNER IN ACCORDANCE WITH MUTCD STANDARDS.
E. ALL PARKING STALL MARKINGS AND LANE ARROWS WITHIN THE PARKING AREAS TO BE WHITE.
F. A UTILITY CUT PERMIT IS REQUIRED FOR EACH OPEN CUT OF A CITY STREET. NOTE THIS ON THE PLAN AND CONTACT 341-5888 FOR MORE DETAILS. IN CERTAIN CASES AN ENTIRE RESURFACING OF THE AREA TO BE OPEN CUT MAY BE REQUIRED.
G. INSTALL REFLECTORS PER CITY AND NCDOT STANDARDS. TRAFFIC ENGINEERING MUST APPROVE OF PAVEMENT MARKING LAYOUT PRIOR TO ACTUAL STRIPING.
H. ANY BROKEN OR MISSING SIDEWALK PANELS, DRIVEWAY APRON PANELS, OR CURB AND GUTTER SECTIONS SHALL BE REPLACED.
I. A LANDSCAPING PLAN INDICATING THE LOCATION OF REQUIRED STREET SHALL BE SUBMITTED TO THE CITY OF WILMINGTON TRAFFIC ENGINEERING DIVISION AND PARKS AND RECREATION DEPARTMENT FOR REVIEW AND APPROVAL PRIOR TO THE RECORDING OF THE FINAL PLAT, [SD 15-14 COFW TECH STDS]
J. CONTACT TRAFFIC ENGINEERING AT 341-7888 FORTY-EIGHT PRIORS TO ANY EXCAVATION IN THE RIGHT-OF-WAY.

GENERAL SITE NOTES:

SEE SHEET C-4 GENERAL SITE NOTES.

EXISTING LEGEND

▲	CALCULATED POINT	AC =	ACRES
◉	EXISTING IRON PIPE	ACSM =	AMERICAN CONGRESS ON SURVEYING AND MAPPING
◆	BORE HOLE	ALTA =	AMERICAN LAND TITLE ASSOCIATION
○	IRON PIPE SET	B.M. =	BOOK OF MAPS
Ⓢ	SANITARY SEWER MANHOLE	EIP =	EXISTING IRON PIPES
Ⓒ	SANITARY SEWER CLEANOUT	ELEV =	ELEVATION
⋈	WATER VALVE	FIRM =	FLOOD INSURANCE RATE MAP
⋈	WATER METER	GPS =	GLOBAL POSITIONING SYSTEM
⋈	FIRE HYDRANT	HUD =	HOUSING URBAN DEVELOPMENT
⊟	TELEPHONE PEDESTAL	HYD =	FIRE HYDRANT
Ⓣ	TELEPHONE MANHOLE	INV =	INVERT
▣	ELECTRIC BOX	IPS =	IRON PIPE SET
☼	LIGHT POLE	LLC =	LIMITED LIABILITY COMPANY
⌐○	POWER POLE	MPH =	MILES PER HOUR
▭	CURB INLET	MSL =	MEAN SEA LEVEL
Ⓓ	STORM DRAINAGE MANHOLE	N/F =	NOW OR FORMERLY
□	YARD INLET	NSPS =	NATIONAL SOCIETY OF PROFESSIONAL SURVEYORS
═══	STORM DRAIN	NTS =	NOT TO SCALE
OU	OVERHEAD UTILITIES	R.C.P. =	REINFORCED CONCRETE PIPE
UE	UNDERGROUND ELECTRIC	R/W =	RIGHT-OF-WAY
UT	UNDERGROUND TELEPHONE	SF =	SQUARE FOOT
W	WATER LINE	S.R. =	STATE ROAD
SS	SANITARY SEWER LINE	TBM =	TEMPORARY BENCH MARK
G	GAS LINE	TWSP =	TOWNSHIP
X FENCE X	FENCE LINE	TYP =	TYPICAL
FO	FIBER OPTIC LINE		
	PROPERTY LINE		

PROPOSED LEGEND

	SPILL CURB		SIGN
	HANDICAP RAMP	•	BOLLARD
		X	FENCE
	HANDICAP STALL		POLE MOUNTED AREA LIGHT
	CONCRETE		EXISITING IRON PIPE
		F.F.E. = XXX.XX	FINISH FLOOR ELEVATION

PAVING SPECIFICATIONS

CONTRACTOR TO REFER TO SOILS REPORT PREPARED BY ECS, PROJECT NUMBER 22-18134-B DATED 10-19-12.

SITE:
3" ASPHALT SURFACE (9F9.5A) AND 8" ABC STONE

NCDOT:
2" ASPHALT SURFACE (S9.5B)
3" INTERMEDIATE (I190B)
5" BASE (B25.0B)

NOTE:
McDONALD'S ENGINEER RESERVES THE RIGHT TO REQUEST A COMPACTION TEST AND/OR A CORE SAMPLE. IF TESTS PROVE CORRECT, PER ABOVE SPECIFICATION, TESTS WILL BE AT THE EXPENSE OF McDONALDS, OTHERWISE GENERAL CONTRACTOR WILL BE CHARGED.

PARKING INFORMATION

TOTAL SPACES					
45	31	SPACES	9.0' X 18.0'	@	60°
	12	SPACES	9.0' X 20.0'	@	60°
	2	SPACES (HANDICAP)	8.0' X 18.0'	@	60°
	-	SPACES	9.0' X 18.0'	@	90°

UTILITY INFORMATION

	SIZE & TYPE	LOCATION
SANITARY SEWER	8" CLAY	ALONG CAROLINA BEACH RD (SAME SIDE)
STORM SEWER	15" & 18" RCP	ALONG CAROLINA BEACH RD & SHIPYARD BLVD.
WATER	16" PUBLIC	ALONG CAROLINA BEACH RD & SHIPYARD BLVD.
GAS	2" MAIN	ALONG CAROLINA BEACH RD (OPPOSITE SIDE)
ELECTRIC	OVERHEAD	ALONG CAROLINA BEACH RD & SHIPYARD BLVD.
TELEPHONE	OVERHEAD	ALONG CAROLINA BEACH RD
FIRE HYDRANT	PUBLIC	NEAR SW CORNER OF SITE

SURVEY INFORMATION

PREPARED BY: COMMERCIAL SITE DESIGN, PLLC
8312 CREEDMOOR ROAD
RALEIGH, NORTH CAROLINA 27613
PHONE: (919) 848-6121
DATE OF ORIGINAL FIELD SURVEY: OCTOBER 10, 2012 DATE OF MAP: NOVEMBER 6, 2012

PLAN SCALE: 1" = 20'

STREET ADDRESS
2543 CAROLINA BEACH ROAD

CITY	STATE
WILMINGTON	NORTH CAROLINA

COUNTY
NEW HANOVER

TAX PARCEL NUMBER	LOCATION CODE NUMBER
R06018-004-023-000	32-0062
CSD FILENAME: MCD1216-SP	

ZONING INFORMATION

ZONING:	CS-(COMMERCIAL SERVICE)
BUILDING SETBACKS	
FRONT:	35 FEET
RIGHT SIDE:	7 FEET
LEFT SIDE:	7 FEET
REAR:	15 FEET
LANDSCAPE SETBACKS	
FRONT:	25 FEET
RIGHT SIDE:	10 FEET
LEFT SIDE:	10 FEET
REAR:	10 FEET
PARKING REQUIREMENTS:	PARKING REQUIREMENTS: MINIMUM: 1 SPACE PER 4 SEATS OR 1 PER 80 SF GFA (MINUS KITCHEN & BATHROOMS). MAXIMUM: 1 PER 2.5 SEATS OR 1 PER 65 SF GFA (MINUS KITCHEN & BATHROOMS).
BICYCLE REQUIRED:	5 SPACES
BICYCLE PROVIDING:	5 SPACES

SITE KEY NOTES CONTINUED:

58. PAINT CROSSWALK PER DETAIL SHEET
59. RELOCATED HISTORIC SITE SIGN. COORDINATE FINAL LOCATION WITH CITY.
61. STOP BAR AND STOP SIGN PER CITY AND MUTCD SPECIFICATIONS
62. "NO PEDESTRIAN CROSSING" SIGN, CONTRACTOR TO COORDINATE WITH CITY
63. CONCRETE WHEEL STOP PER DETAIL SHEET

GRAPHIC SCALE
20 0 10 20 40
1 inch = 20 ft.

Approved Construction Plan

Name	Date
Planning	
Traffic	
Fire	

REV	DATE	DESCRIPTION	BY	ISSUE/REF
1	12-12-12	PERMIT ISSUE	JWR	
2	1-16-13	CITY OF WILMINGTON COMMENTS	STH	
3	03-28-13	CITY OF WILMINGTON COMMENTS #2 & NCDOT	JWR	
4	05-13-13	CITY OF WILMINGTON COMMENTS #3 & NCDOT	JWR	
5	06-24-13	CITY OF WILMINGTON COMMENTS #4 & NCDOT	JWR	

COMMERCIAL SITE DESIGN
(919) 848-6121, FAX: (919) 848-3741
WWW.CSITEDESIGN.COM
8312 CREEDMOOR ROAD
RALEIGH, NORTH CAROLINA 27613

McDonald's CORPORATION
RALEIGH REGION
4801 SIX FORKS ROAD - SUITE 200 - RALEIGH, N.C. 27609

THESE PLANS AND SPECIFICATIONS ARE THE PROPERTY OF McDONALD'S CORPORATION AND SHALL NOT BE REPRODUCED WITHOUT THEIR WRITTEN PERMISSION.

OFFICE
ADDRESS

PLAN APPROVAL
SIGNATURE (2 REQUIRED) — DATE
REGIONAL MGR.
REGIONAL DEV. DIRECTOR
REGIONAL CONSTRUCTION MGR.
REGIONAL REAL ESTATE MGR.

CO-SIGN SIGNATURES
AREA CONSTRUCTION MGR.
CONTRACTOR

STATUS	DATE	BY
FINAL	-	-
PLAN CHECKED	-	-
AS-BUILT	-	-

C-3
SITE PLAN

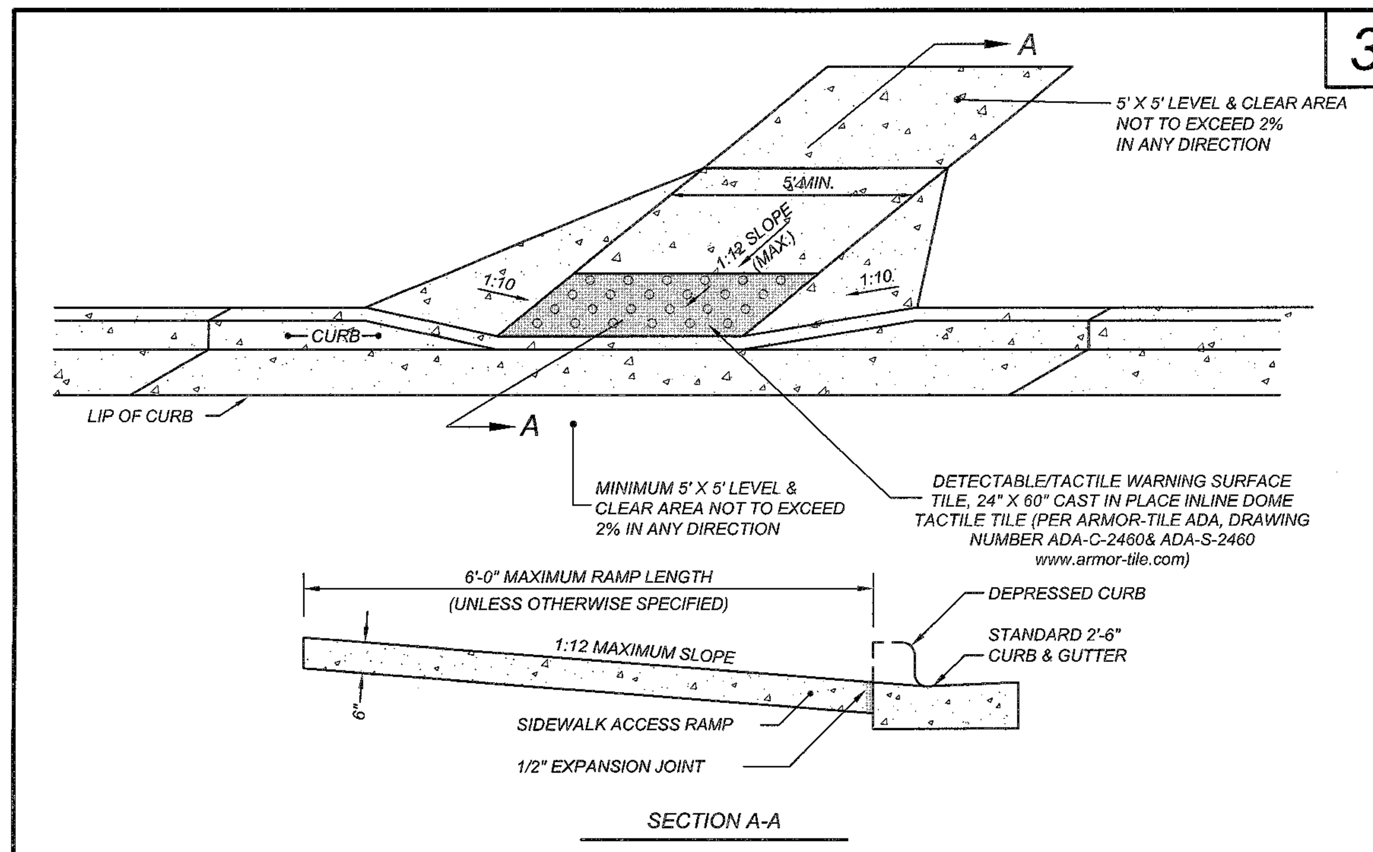

STANDARD HANDICAP RAMP DETAIL

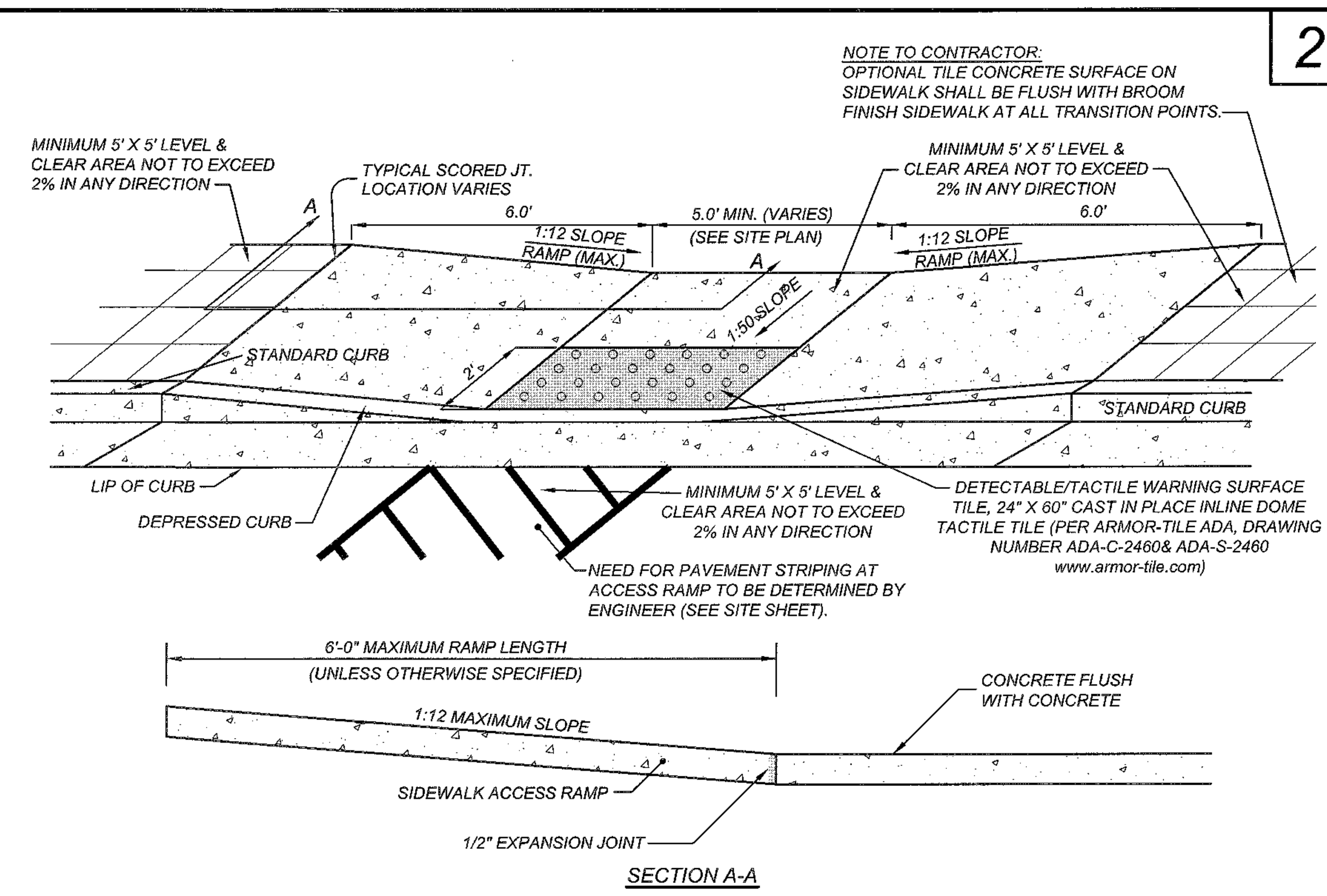

FLUSH HANDICAP RAMP DETAIL

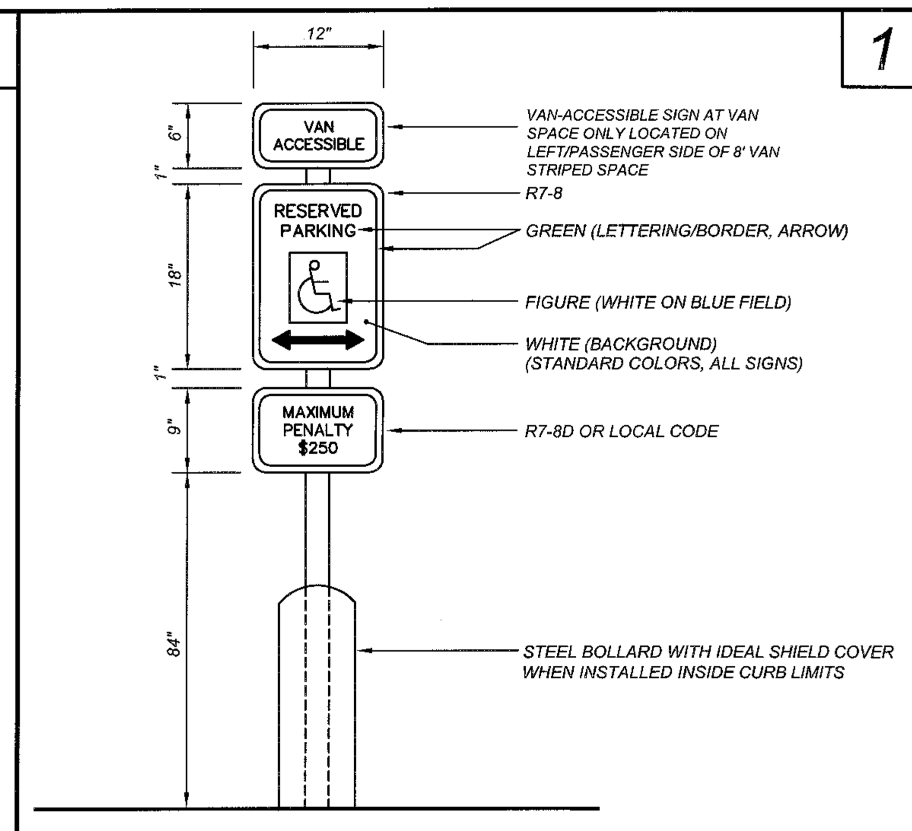

HANDICAP SIGN DETAIL

ENVIRONMENTAL NOTE:

EXISTING ENVIRONMENTAL REMEDIATION SYSTEM OF MONITORING WELLS, PIPES, AND OTHER APPERTENANCES ARE TO REMAIN. CONTRACTOR TO USE CAUTION WHEN PERFORMING ANY CONSTRUCTION OR DEMOLITION ACTIVITIES IN THE VICINITY OF THESE FEATURES. CONTRACTOR SHALL BE RESPONSIBLE FOR THE REPAIR OF ANY DAMAGE TO SYSTEM RESULTING FROM SITE CONSTRUCTION. ADJUST MONITORING WELL RIM ELEVATIONS TO PROPOSED FINAL GRADE.

NC GRID (NAD 83)

GENERAL SITE NOTES:

1. THE CONTRACTOR SHALL VERIFY LOCATION AND ELEVATION OF ALL UNDERGROUND UTILITIES. THE LOCATION OF ALL EXISTING UTILITIES ARE NOT NECESSARILY SHOWN ON THE PLANS AND WHERE SHOWN ARE ONLY APPROXIMATE. THE CONTRACTOR SHALL ON HIS INITIATIVE AND AT NO EXTRA COSTS HAVE LOCATED ALL UNDERGROUND LINES AND STRUCTURES AS NECESSARY. NO CLAIMS FOR DAMAGES OR EXTRA COMPENSATION SHALL ACCRUE TO THE CONTRACTOR FROM THE PRESENCE OF SUCH PIPE, OTHER OBSTRUCTIONS OR FROM ANY DELAY DUE TO REMOVAL OR REARRANGEMENT OF THE SAME. THE CONTRACTOR SHALL BE RESPONSIBLE FOR ANY DAMAGE TO UNDERGROUND STRUCTURES. THE CONTRACTOR IS RESPONSIBLE FOR CONTACTING ALL NON-SUBSCRIBING UTILITIES. THE CONTRACTOR(S) SHALL CONTACT NORTH CAROLINA "ONE-CALL" AT 1-800-632-4949 FOR ASSISTANCE IN LOCATING EXISTING UTILITIES. CALL AT LEAST 48 HOURS PRIOR TO ANY DIGGING.
2. THE LOCATIONS OF ALL UTILITIES SHOWN ON THESE PLANS ARE BASED ON THE AVAILABLE INFORMATION. THE CONTRACTOR SHALL VERIFY THE EXACT LOCATION OF UTILITIES WITH THE UTILITY OWNERS PRIOR TO COMMENCEMENT OF CONSTRUCTION.
3. PRIOR TO STARTING CONSTRUCTION, THE GENERAL CONTRACTOR SHALL BE RESPONSIBLE TO VERIFY THAT ALL REQUIRED PERMITS AND APPROVALS HAVE BEEN OBTAINED. NO CONSTRUCTION OR FABRICATION OF ANY ITEM SHALL BEGIN UNTIL THE CONTRACTOR HAS RECEIVED ALL PLANS AND ANY OTHER DOCUMENTATION FROM ALL OF THE PERMITTING AND ANY OTHER REGULATORY AUTHORITIES. FAILURE OF THE CONTRACTOR TO FOLLOW THIS PROCEDURE SHALL CAUSE THE CONTRACTOR TO ASSUME FULL RESPONSIBILITY FOR ANY SUBSEQUENT MODIFICATION OF THE WORK MANDATED BY ANY REGULATORY AUTHORITY. ALL CONSTRUCTION TO BE IN ACCORDANCE WITH PERMITS ISSUED AND APPLICABLE STATE, COUNTY AND LOCAL CODES.
4. THE GENERAL CONTRACTOR SHALL CONTACT ALL OWNERS OF EASEMENTS, UTILITIES AND RIGHT-OF-WAYS, PUBLIC OR PRIVATE, PRIOR TO WORKING IN THESE AREAS. ACCESS SHALL BE LIMITED UNTIL PERMISSION IS GRANTED.
5. CONTRACTOR SHALL MAINTAIN THE SITE IN A MANNER SO THAT WORKMEN AND PUBLIC SHALL BE PROTECTED FROM INJURY, AND ADJOINING PROPERTY PROTECTED FROM DAMAGE.
6. CONTRACTOR IS RESPONSIBLE FOR DAMAGE TO ANY EXISTING ITEM AND/OR MATERIAL INSIDE OR OUTSIDE CONTRACT LIMITS DUE TO CONSTRUCTION OPERATIONS.
7. ALL SITE DIMENSIONS ARE TO THE FACE OF CURB, UNLESS OTHERWISE NOTED.
8. THE GENERAL CONTRACTOR SHALL KEEP THE AREA OUTSIDE THE "CONSTRUCTION LIMITS" BROOM CLEAN AT ALL TIMES AND REMOVE ALL TRASH AND DEBRIS FROM THE SITE UPON COMPLETION OF THE PROJECT AND AT LEAST ONCE A WEEK DURING CONSTRUCTION.
9. BEFORE COMMENCEMENT OF WORK, THE CONTRACTOR SHALL REVIEW ALL PLANS AND SPECIFICATIONS AND THE JOB SITE. THE CONTRACTOR SHALL NOTIFY THE OWNER AND THE ENGINEER WHO PREPARED THE PLANS OF ANY DISCREPANCIES THAT MAY REQUIRE MODIFICATIONS TO THESE PLANS OR OF ANY FIELD CONFLICTS.
10. ALL PERMITS RELATIVE TO THE PROJECT MUST BE OBTAINED, PRIOR TO CONSTRUCTION. ALL CONSTRUCTION TO BE IN ACCORDANCE WITH PERMITS ISSUED AND APPLICABLE STATE, COUNTY AND LOCAL CODES.
11. ALL WORK IN RIGHT-OF-WAY SHALL BE PERFORMED IN ACCORDANCE WITH "THE CURRENT EDITION OF THE STATE DEPARTMENT OF TRANSPORTATION CONSTRUCTION AND MATERIALS SPECIFICATIONS".
12. CONTRACTOR AGREES THAT IN ACCORDANCE WITH GENERALLY ACCEPTED CONSTRUCTION PRACTICES, CONTRACTOR WILL BE REQUIRED TO ASSUME SOLE AND COMPLETE RESPONSIBILITY FOR JOB SITE CONDITIONS DURING THE COURSE OF CONSTRUCTION OF THE PROJECT, INCLUDING SAFETY OF ALL PERSONS AND PROPERTY. THIS REQUIREMENT SHALL BE MADE TO APPLY CONTINUOUSLY AND NOT BE LIMITED TO NORMAL WORKING HOURS. CONTRACTOR FURTHER AGREES TO DEFEND, INDEMNIFY, AND HOLD THE OWNER AND DESIGN PROFESSIONAL HARMLESS OF ANY AND ALL LIABILITY, REAL OR ALLEGED IN CONNECTION WITH THE PERFORMANCE OF WORK ON THIS PROJECT, ACCEPTING LIABILITY ARISING FROM THE SOLE NEGLIGENCE OF THE OWNER OR DESIGN PROFESSIONAL.
13. SUBJECT PROPERTY IS NOT LOCATED WITHIN A SPECIAL FLOOD HAZARD ZONE. IT IS LOCATED IN ZONE "X" AS DEFINED BY HUD F.I.R.M. COMMUNITY PANEL NUMBER 3720312600J, WITH AN EFFECTIVE DATE OF APRIL 3, 2006.

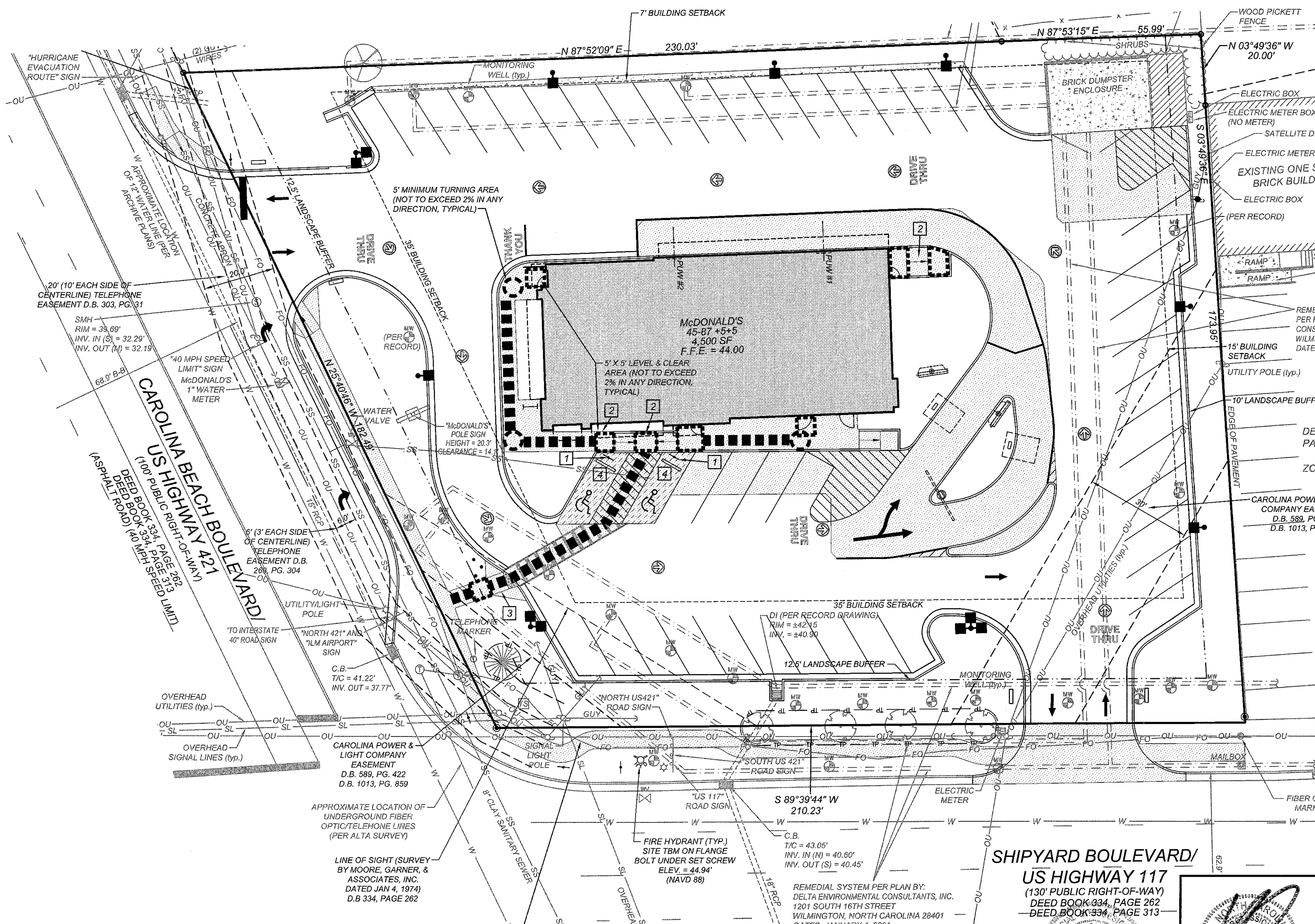

EXISTING FIBER OPTIC LINES, CONTRACTOR TO VERIFY SIZE, LOCATION, AND DEPTH OF LINES PRIOR TO ANY DEMOLITION OR CONSTRUCTION ACTIVITIES. COORDINATE WITH UTILITY COMPANY.

GRAPHIC SCALE
20 0 10 20 40
1 inch = 20 ft.

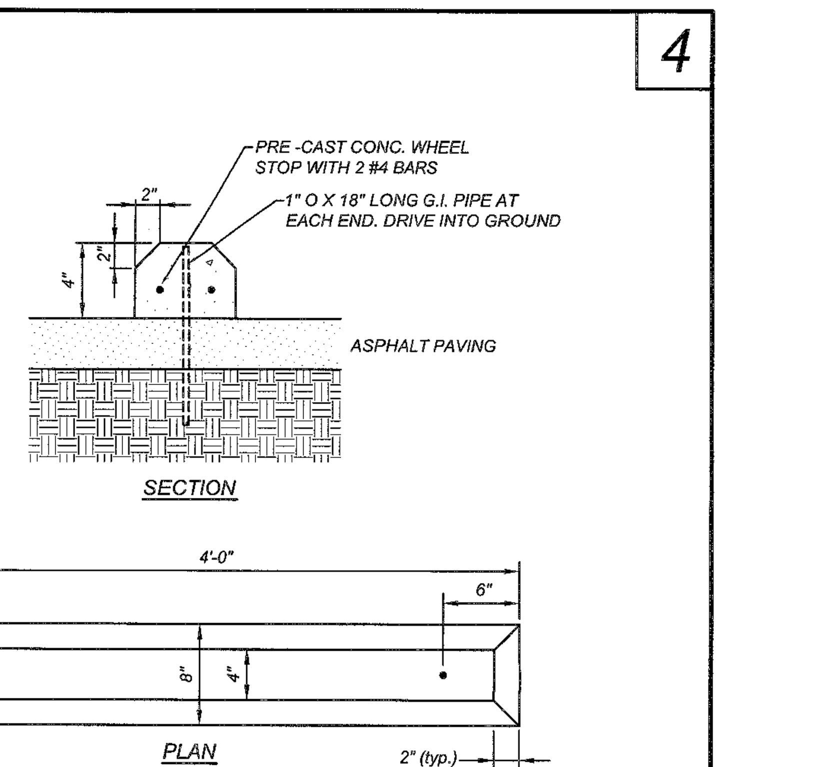

CONCRETE WHEEL STOP

EXISTING LEGEND

Symbol	Description	Abbr.	Meaning
▲	CALCULATED POINT	AC	= ACRES
◉	EXISTING IRON PIPE	ACSM	= AMERICAN CONGRESS ON SURVEYING AND MAPPING
	BORE HOLE	ALTA	= AMERICAN LAND TITLE ASSOCIATION
o	IRON PIPE SET	B.M.	= BOOK OF MAPS
Ⓢ	SANITARY SEWER MANHOLE	EIP	= EXISTING IRON PIPES
Ⓒ	SANITARY SEWER CLEANOUT	ELEV	= ELEVATION
	WATER VALVE	FIRM	= FLOOD INSURANCE RATE MAP
	WATER METER	GPS	= GLOBAL POSITIONING SYSTEM
	FIRE HYDRANT	HUD	= HOUSING URBAN DEVELOPMENT
	TELEPHONE PEDESTAL	HYD	= FIRE HYDRANT
Ⓣ	TELEPHONE MANHOLE	INV	= INVERT
Ⓔ	ELECTRIC BOX	IPS	= IRON PIPE SET
	LIGHT POLE	LLC	= LIMITED LIABILITY COMPANY
	POWER POLE	MPH	= MILES PER HOUR
	CURB INLET	MSL	= MEAN SEA LEVEL
Ⓓ	STORM DRAINAGE MANHOLE	N/F	= NOW OR FORMERLY
□	YARD INLET	NSPS	= NATIONAL SOCIETY OF PROFESSIONAL SURVEYORS
=========	STORM DRAIN	NTS	= NOT TO SCALE
—— OU ——	OVERHEAD UTILITIES	R.C.P.	= REINFORCED CONCRETE PIPE
—— UE ——	UNDERGROUND ELECTRIC	R/W	= RIGHT-OF-WAY
—— UT ——	UNDERGROUND TELEPHONE	SF	= SQUARE FOOT
—— W ——	WATER LINE	S.R.	= STATE ROAD
—— SS ——	SANITARY SEWER LINE	TBM	= TEMPORARY BENCH MARK
—— G ——	GAS LINE	TWSP	= TOWNSHIP
—X——X—	FENCE LINE	TYP	= TYPICAL
—— FO ——	FIBER OPTIC LINE		
————	PROPERTY LINE		

LEGEND

Symbol	Description
	CONCRETE CURB AND GUTTER
	HANDICAP RAMP
♿	HANDICAP STALL
	CONCRETE
	SIGN
•	BOLLARD
——X——	FENCE
	POLE MOUNTED AREA LIGHT
◉	PROPERTY CORNER
F.F.E. = XXX.XX	FINISH FLOOR ELEVATION
■■■■	ADA ACCESSIBLE ROUTE (5.0% MAXIMUM LONGITUDAL SLOPE, 2.0% MAXIMUM CROSS SLOPE; EXCLUDING RAMPS)
	5' MINIMUM TURNING AREA (NOT TO EXCEED 2% IN ANY DIRECTION) (typ.)
	5' X 5' LEVEL & CLEAR AREA (NOT TO EXCEED 2% IN ANY DIRECTION)
	HANDICAP PARKING AREA (2% MAX. SLOPE)

PARKING INFORMATION

TOTAL SPACES							
45	31	SPACES	9.0'	X	18.0'	@	60°
	12	SPACES	9.0'	X	20.0'	@	60°
	2	SPACES (HANDICAP)	8.0'	X	18.0'	@	60°
	-	SPACES	9.0'	X	18.0'	@	90°

UTILITY INFORMATION

	SIZE & TYPE	LOCATION
SANITARY SEWER	8" CLAY	ALONG CAROLINA BEACH RD (SAME SIDE)
STORM SEWER	15" & 18" RCP	ALONG CAROLINA BEACH RD & SHIPYARD BLVD.
WATER	16" PUBLIC	ALONG CAROLINA BEACH RD & SHIPYARD BLVD.
GAS	2" MAIN	ALONG CAROLINA BEACH RD (OPPOSITE SIDE)
ELECTRIC	OVERHEAD	ALONG CAROLINA BEACH RD & SHIPYARD BLVD.
TELEPHONE	OVERHEAD	ALONG CAROLINA BEACH RD
FIRE HYDRANT	PUBLIC	NEAR SW CORNER OF SITE

SURVEY INFORMATION

PREPARED BY: COMMERCIAL SITE DESIGN, PLLC
8312 CREEDMOOR ROAD
RALEIGH, NORTH CAROLINA 27613
PHONE: (919) 848-6121
DATE OF ORIGINAL FIELD SURVEY: OCTOBER 10, 2012 DATE OF MAP: NOVEMBER 6, 2012

PLAN SCALE: 1" = 20'

STREET ADDRESS
2543 CAROLINA BEACH ROAD

CITY	STATE
WILMINGTON	NORTH CAROLINA

COUNTY
NEW HANOVER

TAX PARCEL NUMBER	LOCATION CODE NUMBER
R06018-004-023-000	32-0062
CSD FILENAME: MCD1216-ADA	

COMMERCIAL SITE DESIGN, PLLC — REGISTERED CORPORATION — P-0266 — RALEIGH, NORTH CAROLINA
NORTH CAROLINA PROFESSIONAL ENGINEER 024501 — BRAD BURCHETT
7/16/13

REV	DATE	DESCRIPTION	BY	ISSUE/REF
1	12-12-12	PERMIT ISSUE	JWR	
2	1-16-13	CITY OF WILMINGTON COMMENTS	STH	
3	03-28-13	CITY OF WILMINGTON COMMENTS #2 & NCDOT	JWR	
4	05-13-13	CITY OF WILMINGTON COMMENTS #3 & NCDOT	JWR	
5	06-24-13	CITY OF WILMINGTON COMMENTS #4 & NCDOT	JWR	

COMMERCIAL SITE DESIGN
8312 CREEDMOOR ROAD
RALEIGH, NORTH CAROLINA 27613
(919) 848-6121, FAX: (919) 848-3741
WWW.CSITEDESIGN.COM

McDonald's®

THESE PLANS AND SPECIFICATIONS ARE THE PROPERTY OF McDONALD'S CORPORATION AND SHALL NOT BE REPRODUCED WITHOUT THEIR WRITTEN PERMISSION.

OFFICE	RALEIGH REGION
ADDRESS	4601 SIX FORKS ROAD - SUITE 200 - RALEIGH, N.C. 27609

PLAN APPROVAL

	SIGNATURE (2 REQUIRED)	DATE
REGIONAL MGR.		
REGIONAL DEV. DIRECTOR		
REGIONAL CONSTRUCTION MGR.		
REGIONAL REAL ESTATE MGR.		

CO-SIGN SIGNATURES		
AREA CONSTRUCTION MGR.		
CONTRACTOR		

STATUS	DATE	BY
FINAL	-	-
PLAN CHECKED	-	-
AS-BUILT	-	-

C-4
ADA ACCESSIBILITY PLAN AND DETAILS

TEMPORARY SEEDING IN NORTH CAROLINA

	SEEDING MIXTURE SPECIES	RATE (lb/acre)
	RYE (GRAIN)	120
LATE WINTER & EARLY SPRING	ANNUAL LESPEDEZA (KOBE IN PIEDMONT AND COSTAL PLAIN, KOREAN IN MOUNTAINS	50
	OMIT ANNUAL LESPEDEZA WHEN DURATION OF TEMPORARY COVER IS NOT TO EXTEND BEYOND JUNE.	
SUMMER	GERMAN MILLET	40
	IN THE PIEDMONT AND MOUNTAINS, A SMALL-STEMMED SUNDAGRASS MAY BE SUBSTITUTED AT A RATE OF 50 LB/ACRE.	
FALL	RYE (GRAIN)	120

SEEDING DATES:

LATE WINTER & EARLY SPRING	MOUNTAINS - ABOVE 2500 ft: FEB. 15 - MAY 15 BELOW 2500 ft: FEB. 1 - MAY 1
	PIEDMONT - JAN. 1 - MAY 1
	COASTAL PLAIN - DEC. 1 - APR. 15
SUMMER	MOUNTAINS - MAY 15 - AUG. 15
	PIEDMONT - MAY 1 - AUG. 15
	COASTAL PLAIN - APR. 15 - AUG. 15
FALL	MOUNTAINS - AUG. 15 - DEC. 15
	COASTAL PLAIN AND PIEDMONT - AUG. 15 - DEC.30

SOIL AMENDMENTS
FOLLOW RECOMMENDATIONS OF SOIL TESTS OR APPLY 2,000 LBS/ACRE GROUND AGRICULTURAL LIMESTONE AND 750 LBS/ACRE 10-10-10 FERTILIZER

MULCH
APPLY 4,000 LBS/ACRE STRAW. ANCHOR STRAW BY TACKING WITH ASPHALT, NETTING OR A MULCH ANCHORING TOOL. A DISK WITH BLADES SET NEARLY STRAIGHT CAN BE USED AS A MULCH ANCHORING TOOL.

MAINTENANCE
REFERTILIZE IF GROWTH IS NOT FULLY ADEQUATE. RESEED, REFERTILIZE AND MULCH IMMEDIATELY FOLLOWING EROSION OR OTHER DAMAGE.

GRADING/EROSION CONTROL NOTES:

1. THE CONTRACTOR SHALL VERIFY LOCATION AND ELEVATION OF ALL UNDERGROUND UTILITIES. THE LOCATION OF ALL EXISTING UTILITIES ARE NOT NECESSARILY SHOWN ON THE PLANS AND WHERE SHOWN ARE ONLY APPROXIMATE. THE CONTRACTOR SHALL ON HIS INITIATIVE AND AT NO EXTRA COSTS HAVE LOCATED ALL UNDERGROUND LINES AND STRUCTURES AS NECESSARY. NO CLAIMS FOR DAMAGES OR EXTRA COMPENSATION SHALL ACCRUE TO THE CONTRACTOR FROM THE PRESENCE OF SUCH PIPE, OTHER OBSTRUCTIONS OR FROM ANY DELAY DUE TO REMOVAL OR REARRANGEMENT OF THE SAME. THE CONTRACTOR SHALL BE RESPONSIBLE FOR ANY DAMAGE TO UNDERGROUND STRUCTURES. THE CONTRACTOR IS RESPONSIBLE FOR CONTACTING ALL NON-SUBSCRIBING UTILITIES. THE CONTRACTOR(S) SHALL CONTACT NORTH CAROLINA "ONE-CALL" AT 800-632-4949 FOR ASSISTANCE IN LOCATING EXISTING UTILITIES. CALL AT LEAST 48 HOURS PRIOR TO ANY DIGGING.
2. SUBJECT PROPERTY IS NOT LOCATED WITHIN A SPECIAL FLOOD HAZARD ZONE. IT IS LOCATED IN ZONE "X" AS DEFINED BY HUD F.I.R.M. COMMUNITY PANEL NUMBER 3720312600J, WITH AN EFFECTIVE DATE OF APRIL 3, 2006.
3. ALL GRADING AND BACKFILLING, EXCAVATING, ETC., SHALL BE IN ACCORDANCE WITH THE RECOMMENDATIONS SET FORTH IN THE GEOTECHNICAL INVESTIGATION REPORTS. REFER TO THESE REPORTS FOR ADDITIONAL INFORMATION NOT TRANSFERRED TO THESE PLANS.
4. THE EROSION CONTROL MEASURES ARE TO BE IN PLACE PRIOR TO ANY EARTHWORK.
5. ALL EROSION CONTROL MEASURES SHALL BE MAINTAINED UNTIL DISTURBED AREAS ARE STABILIZED. NEW HANOVER COUNTY ENGINEER MUST BE NOTIFIED BEFORE ANY EROSION CONTROL MEASURES ARE REMOVED.
6. ALL EROSION CONTROL FACILITIES SHALL BE INSPECTED AND REPAIRED AT A MINIMUM OF WEEKLY BASIS AND AFTER EVERY RAIN EVENT.
7. ALL PAVED AREAS SHALL BE KEPT CLEAR OF EARTH MATERIALS AND DEBRIS. THE SITE SHALL BE MAINTAINED SO AS TO MINIMIZE SEDIMENT-LADEN RUNOFF TO ANY STORM DRAINAGE SYSTEM.
8. ALL CONSTRUCTION TRAFFIC SHALL ENTER AND EXIT THE SITE VIA THE CONSTRUCTION ENTRANCES.
9. THE APPROXIMATE AREA OF THE LIMITS OF CLEARING, GRADING AND CONSTRUCTION IS 1.20 ACRES.
10. PURSUANT TO G.S. 113A-57(2), THE ANGLE FOR GRADED SLOPES AND FILLS SHALL BE NO GREATER THAN THE ANGLE THAT CAN BE RETAINED BY VEGETATIVE COVER OR OTHER ADEQUATE EROSION CONTROL DEVICES OR STRUCTURES. IN ANY EVENT, SLOPES LEFT EZPOSED WILL, WITHIN 14 CALENDAR DAYS OF COMPLETION OF ANY PHASE OF GRADING BE PLANTED OR OTHERWISE PROVIDED WITH TEMPORARY OR PERMANENT GROUND COVER, DEVICES, OR STRUCTURES SUFFICIENT TO RESTRAIN EROSION. PURSUANT TO G.S. 113A-57(3), PROVISIONS FOR PERMANENT GROUND COVER SUFFICIENT TO RESTRAIN EROSION MUST BE ACCOMPLISHED FOR ALL DISTURBED AREAS WITHIN 14 CALENDAR DAYS FOLLOWING COMPLETION OF CONSTRUCTION OR DEVELOPMENT.

    ALL CUT AND FILL SLOPES AND CHANNEL SIDESLOPES WHICH ARE NOT TO BE PAVED, SHALL BE SEEDED UNTIL A GOOD STAND OF GRASS IS OBTAINED IN ACCORDANCE WITH:
    A. 100 LBS PER 1,000 SQUARE FOOT GROUND LIMESTONE OR EQUIVALENT. NO SOIL TEST REQUIRED FOR INITIAL ESTABLISHMENT.
    B. 20 LBS OF 10-10-10 FERTILIZER OR EQUIVALENT PEER 1,000 SQUARE FOOT.
    C. VARIETIES TO BE SEEDED:
        1. SPRING SEEDING: MARCH 1 - APRIL 30; SPRING OATS 2.5 LBS PER 1,000 SQUARE FOOT.
        2. SUMMER SEEDING: MAY 1 - AUGUST 1; WEEPING LOVE GRASS AT 2 OZ. PER SQUARE FOOT MIXED WITH 1 BUSHEL OF SAWDUST FOR UNIFORM SEEDING.
        3. ASPHALT MULCH 6 GALLONS PER 1,000 SQUARE FOOT. ALL SEEDING WILL BEE MULCHED.
11. SEE LANDSCAPE PLAN FOR PERMANENT SEEDING OR SOD SPECIFICATIONS.
12. ALL ELEVATIONS SHOWN ARE IN REFERENCE TO THE BENCHMARK AND MUST BE VERIFIED BY THE GENERAL CONTRACTOR AT GROUNDBREAK.
13. UNLESS OTHERWISE SPECIFIED ON THESE PLANS, ALL STORM DRAINAGE PIPES ARE TO BE RCP, CLASS III.
14. THERE ARE NO EXISTING WETLANDS ON THIS SITE.

CONSTRUCTION SEQUENCE:

THE CONTRACTOR IS RESPONSIBLE FOR ENSURING THAT EROSION IS MINIMIZED AND THAT COMPLIANCE WITH ALL APPLICABLE FEDERAL, STATE AND LOCAL LAWS, REGULATIONS, AND ORDINANCES IS MAINTAINED THROUGHOUT EXECUTION OF THIS PROJECT.

1. OBTAIN A LAND DISTURBING PERMIT. SCHEDULE A PRE-CONSTRUCTION MEETING.
2. INSTALL GRAVEL CONSTRUCTION PAD, SILT FENCE, OR OTHER MEASURES AS SHOWN ON THE APPROVED PLAN. CLEAR ONLY AS NECESSARY TO INSTALL THESE DEVICES. SEE DETAIL ON SEEDING SCHEDULE. CONTRACTOR SHALL BEGIN WITH SEDIMENT FENCING AND ALL OTHER SEDIMENT CONTAINMENT DEVICES FOLLOWED BY ALL DIVERSION AND BY-PASS DITCHES/BERMS.
3. BEGIN CLEARING/GRUBBING AND GENERAL EXCAVATION ON SITE. IT IS THE RESPONSIBILITY OF THE CONTRACTOR TO PHASE/STAGE EROSION CONTROL TO ALLOW FOR CONSTRUCTION.
    NOTE: CONTRACTOR SHALL INSPECT AND REPAIR ALL EROSION DEVICES AT LEAST ONCE A WEEK AND AFTER EVERY RAINFALL. GRADING ACTIVITY SHALL BE PROHIBITED IN THE AREAS OF THE SEDIMENT CONTROL DEVICES/SEDIMENT TRAPS UNTIL THE AREAS UPSTREAM OF THESE DEVICES HAVE BEEN STABILIZED AND APPROVED.
4. BEGIN INSTALLING UPSTREAM STORM DRAINAGE SYSTEM. INSTALL APPROVED INLET PROTECTION. ADDITIONAL MEASURES MAY BE REQUIRED BY THE INSPECTOR DUE TO THE ROUTING OF THE STORM DRAINAGE SYSTEM AND ACTUAL FIELD CONDITIONS;
    NOTE: SEDIMENT BASINS SHALL BE FUNCTIONAL THROUGHOUT GRADING AND EXCAVATING.
5. STABILIZE SITE AS AREAS ARE BROUGHT UP TO FINISH GRADE WITH VEGETATION, PAVING, DITCH LININGS, ETC. SEED AND MULCH DENUDED AREAS WITHIN FIFTEEN (15) DAYS OF COMPLETION OF ANY PHASE OF CONSTRUCTION;
    NOTE: THE CONTRACTOR SHALL ENSURE THAT THE EROSION CONTROL DEVICES REMAIN UNDISTURBED DURING CONSTRUCTION OF THE BUILDING PADS AND ASSOCIATED PARKING/DRIVE AREAS ADJACENT TO THESE DEVICES UNTIL THE CONTRIBUTING UPSTREAM AREAS HAVE BEEN STABILIZED AND APPROVED.
6. NOTIFY NEW HANOVER COUNTY ENGINEER OFFICE BEFORE REMOVAL OF ANY EROSION CONTROL MEASURES. WHEN SITE IS APPROVED, REMOVE SILT FENCING, INLET PROTECTION, ETC. AND SEED OUT OR PAVE ANY RESULTING BARE AREAS.

MAINTENANCE NOTES:

IN GENERAL, ALL EROSION AND SEDIMENT CONTROL MEASURES WILL BE CHECKED AND MAINTAINED DAILY AND AFTER EACH RAINFALL GREATER THAN 0.5 INCHES. ANY SEDIMENT THAT HAS BEEN TRANSPORTED BEYOND THE PROJECT LIMITS SHALL BE REMOVED. THE FOLLOWING ITEMS WILL BE CHECKED IN PARTICULAR:

CONSTRUCTION ENTRANCE:

INSPECT CONSTRUCTION ROADS AND PARKING AREAS PERIODICALLY FOR CONDITION OF SURFACE. TOP DRESS WITH NEW GRAVEL AS NEEDED. CHECK ROAD DITCHES AND OTHER SEEDED AREAS FOR EROSION AND SEDIMENTATION AFTER RUNOFF-PRODUCING RAINS. MAINTAIN ALL VEGETATION IN A HEALTHY, VIGOROUS CONDITION. SEDIMENT PRODUCING AREAS SHOULD BE TREATED IMMEDIATELY.

SILT FENCE:

INSPECT SEDIMENT FENCES AT LEAST ONCE A WEEK AND AFTER EACH RAINFALL. MAKE ANY REQUIRED REPAIRS IMMEDIATELY. SHOULD THE FABRIC OF A SEDIMENT FENCE COLLAPSE, TEAR, DECOMPOSE, OR BECOME INEFFECTIVE, REPLACE IT IMMEDIATELY. REMOVE SEDIMENT DEPOSITS WHEN HALF FULL OF SEDIMENT AND UNSTABLE SEDIMENT DEPOSITS AND BRING THE AREA TO GRADE AND STABILIZE IT AFTER THE CONTRIBUTING DRAINAGE AREA HAS BEEN PROPERLY STABILIZED.

SILT FENCE GRAVEL OUTLET:

INSPECT SEDIMENT FENCE GRAVEL OUTLETS AT LEAST ONCE A WEEK AND AFTER EACH RAINFALL. MAKE ANY REQUIRED REPAIRS IMMEDIATELY. REMOVE SEDIMENT DEPOSITS AS NECESSARY TO PROVIDE ADEQUATE STORAGE VOLUME FOR THE NEXT RAIN. ANY RIP RAP DISPLACED MUST BE REPLACED IMMEDIATELY.

OUTLET STABILIZATION STRUCTURE:

INSPECT RIP RAP STRUCTURES WEEKLY AND AFTER SIGNIFICANT (0.5 INCH OR GREATER) RAINFALL EVENTS TO SEE IF ANY EROSION AROUND OR BELOW THE RIP RAP HAS TAKEN PLACE, OR IF STONES HAVE BEEN DISLODGED. IMMEDIATELY MAKE ALL NEEDED REPAIRS TO PREVENT FURTHER DAMAGE.

BLOCK AND GRAVEL INLET PROTECTION AND SILT SACK INLET PROTECTION:

INSPECT AFTER EACH RAIN AND MAKE REPAIRS AS NEEDED. REMOVE SEDIMENT WHEN HALF FULL OF SEDIMENT. WHEN THE CONTRIBUTING DRAINAGE AREA HAS BEEN ADEQUATELY STABILIZED, REMOVE ALL MATERIALS AND ANY UNSTABLE SOIL, AND EITHER SALVAGE OR DISPOSE OF IT PROPERLY. BRING THE DISTURBED AREA TO PROPER GRADE, THEN SMOOTH AND COMPACT IT. APPROPRIATELY STABILIZE ALL BARE AREAS AROUND THE INLET.

FOCAL POINT STORMWATER BMP NOTES:

CONTRACTOR TO UTILIZE "ELEMENT 1 BIOFILTRATION MEDIA" SUPPLIED BY ACF ENVIRONMENTAL FOR THE SPECIFIED HIGH FLOW MEDIA. CONTACT STACI SMITH AT 919-602-7279 TO ORDER.

CONTRACTOR TO CONTACT AN ACF REPRESENTATIVE TWO WEEKS PRIOR TO INSTALLATION TO SCHEDULE ONSITE ASSISTANCE. AN ACF REPRESENTATIVE MUST BE PRESENT DURING INSTALLATION OF THE SYSTEM. THIS SUPPORT IS COMPLIMENTARY TO FACILITATE THE CORRECT INSTALLATION OF THE SYSTEM.

ENVIRONMENTAL NOTE:

EXISTING ENVIRONMENTAL REMEDIATION SYSTEM OF MONITORING WELLS, PIPES, AND OTHER APPERTENANCES ARE TO REMAIN. CONTRACTOR TO USE CAUTION WHEN PERFORMING ANY CONSTRUCTION OR DEMOLITION ACTIVITIES IN THE VICINITY OF THESE FEATURES. CONTRACTOR SHALL BE RESPONSIBLE FOR THE REPAIR OF ANY DAMAGE TO SYSTEM RESULTING FROM SITE CONSTRUCTION. ADJUST MONITORING WELL RIM ELEVATIONS TO PROPOSED FINAL GRADE.

SILT FENCE CALCULATIONS

DRAINAGE AREA TO SILT FENCE: 47,313 SF OR 1.09 ACRES
REQUIRED SILT FENCE LENGTH: 100 LF PER 0.25 ACRES
REQUIRED SILT FENCE LENGTH: 1.09 AC/0.25 AC x 100 = 436 LF
PROPOSED SILT FENCE LENGTH: 902 LF

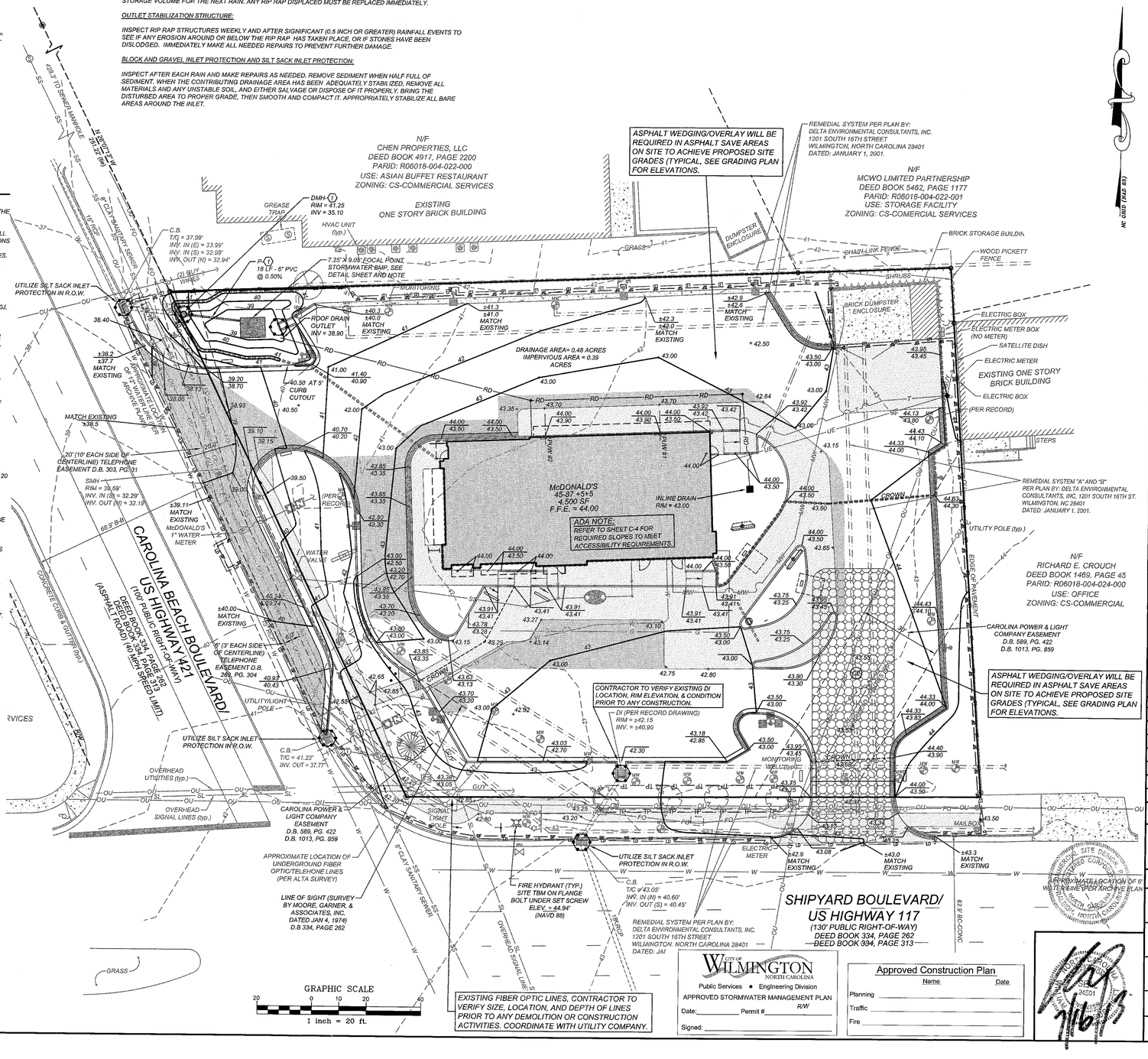

EXISTING LEGEND

▲	CALCULATED POINT	AC	ACRES
⊕	EXISTING IRON PIPE	ACSM	AMERICAN CONGRESS ON SURVEYING AND MAPPING
◆	BORE HOLE	ALTA	AMERICAN LAND TITLE ASSOCIATION
○	IRON PIPE SET	B.M.	BOOK OF MAPS
Ⓢ	SANITARY SEWER MANHOLE	EIP	EXISTING IRON PIPES
Ⓒ	SANITARY SEWER CLEANOUT	ELEV	ELEVATION
⋈	WATER VALVE	FIRM	FLOOD INSURANCE RATE MAP
⋈	WATER METER	GPS	GLOBAL POSITIONING SYSTEM
⋈	FIRE HYDRANT	HUD	HOUSING URBAN DEVELOPMENT
⊡	TELEPHONE PEDESTAL	HYD	FIRE HYDRANT
Ⓣ	TELEPHONE MANHOLE	INV	INVERT
▣	ELECTRIC BOX	IPS	IRON PIPE SET
☼	LIGHT POLE	LLC	LIMITED LIABILITY COMPANY
	POWER POLE	MPH	MILES PER HOUR
	CURB INLET	MSL	MEAN SEA LEVEL
Ⓓ	STORM DRAINAGE MANHOLE	N/F	NOW OR FORMERLY
□	YARD INLET	NSPS	NATIONAL SOCIETY OF PROFESSIONAL SURVEYORS
	STORM DRAIN	NTS	NOT TO SCALE
OU	OVERHEAD UTILITIES	R.C.P.	REINFORCED CONCRETE PIPE
UE	UNDERGROUND ELECTRIC	R/W	RIGHT-OF-WAY
UT	UNDERGROUND TELEPHONE	SF	SQUARE FOOT
W	WATER LINE	S.R.	STATE ROAD
SS	SANITARY SEWER LINE	TBM	TEMPORARY BENCH MARK
G	GAS LINE	TWSP	TOWNSHIP
X	FENCE LINE	TYP	TYPICAL
FO	FIBER OPTIC LINE		
	PROPERTY LINE		

LEGEND

	STORM DRAIN MANHOLE (DMH)		SILT FENCE OUTLET
	DROP INLET (DI)		INLET PROTECTION
	CURB INLET (CB)		BUILDING DOWNSPOUT
	STORM PIPE	SF	SILT FENCE
XX.XX / XX.XX	TOP OF CURB / BOTTOM OF CURB	TP	TREE PROTECTION FENCE
	SPILL CURB		DIVERSION DITCH
	INLINE DRAIN	LD	LIMITS OF DISTURBANCE
			FLARED END SECTION
RD	ROOF DRAIN 6" CORRUGATED PLASTIC 1% MIN. COVER 1% MIN. SLOPE PVC W/ TRAFFIC AREAS CLEANOUTS LOCATED @ ALL BENDS		CONSTRUCTION ENTRANCE
			DRAINAGE AREA TO FOCAL POINT SYSTEM
	HANDICAP PARKING AREA (2% MAX. SLOPE)		
TW=XXX.XX BW=XXX.XX	TW IS GROUND AT TOP OF WALL BW IS GROUND AT BOTTOM OF WALL		

PAVING SPECIFICATIONS

CONTRACTOR TO REFER TO SOILS REPORT PREPARED BY ECS, PROJECT NUMBER 22-18134-B DATED 10-19-12.
SITE: 3" ASPHALT SURFACE (9F9.5A) AND 8" ABC STONE
NCDOT: 2" ASPHALT SURFACE (S9.5B)
3" INTERMEDIATE (I190B)
5" BASE (B25.0B)
NOTE:
McDONALD'S ENGINEER RESERVES THE RIGHT TO REQUEST A COMPACTION TEST AND/OR A CORE SAMPLE IF TESTS PROVE CORRECT, PER ABOVE SPECIFICATION, TESTS WILL BE AT THE EXPENSE OF McDONALD'S, OTHERWISE GENERAL CONTRACTOR WILL BE CHARGED.

PARKING INFORMATION

TOTAL SPACES						
45	31	SPACES	9.0'	X	18.0'	@ 60°
	12	SPACES	9.0'	X	20.0'	@ 60°
	2	SPACES (HANDICAP)	8.0'	X	18.0'	@ 60°
	-	SPACES	9.0'	X	18.0'	@ 90°

UTILITY INFORMATION

	SIZE & TYPE	LOCATION
SANITARY SEWER	8" CLAY	ALONG CAROLINA BEACH RD (SAME SIDE)
STORM SEWER	15" & 18" RCP	ALONG CAROLINA BEACH RD & SHIPYARD BLVD.
WATER	16" PUBLIC	ALONG CAROLINA BEACH RD & SHIPYARD BLVD.
GAS	2" MAIN	ALONG CAROLINA BEACH RD (OPPOSITE SIDE)
ELECTRIC	OVERHEAD	ALONG CAROLINA BEACH RD & SHIPYARD BLVD.
TELEPHONE	OVERHEAD	ALONG CAROLINA BEACH RD
FIRE HYDRANT	PUBLIC	NEAR SW CORNER OF SITE

SURVEY INFORMATION

PREPARED BY: COMMERCIAL SITE DESIGN, PLLC
8312 CREEDMOOR ROAD
RALEIGH, NORTH CAROLINA 27613
PHONE: (919) 848-6121
DATE OF ORIGINAL FIELD SURVEY: OCTOBER 10, 2012 DATE OF MAP: NOVEMBER 6, 2012

PLAN SCALE: 1" = 20'

STREET ADDRESS
2543 CAROLINA BEACH ROAD

CITY	STATE
WILMINGTON	NORTH CAROLINA
COUNTY: NEW HANOVER	

TAX PARCEL NUMBER	LOCATION CODE NUMBER
R06018-004-023-000	32-0062
CSD FILENAME: MCD1216-GP	

CITY OF WILMINGTON NORTH CAROLINA
Public Services • Engineering Division
APPROVED STORMWATER MANAGEMENT PLAN R/W
Date:_____ Permit #_____
Signed: _____

Approved Construction Plan

	Name	Date
Planning		
Traffic		
Fire		

REV	DATE	DESCRIPTION	BY	ISSUE/REF
1	12-12-12	PERMIT ISSUE	JWR	
2	1-16-13	CITY OF WILMINGTON COMMENTS	STH	
3	03-28-13	CITY OF WILMINGTON COMMENTS #2 & NCDOT	JWR	
4	05-13-13	CITY OF WILMINGTON COMMENTS #3 & NCDOT	JWR	
5	06-24-13	CITY OF WILMINGTON COMMENTS #4 & NCDOT	JWR	

COMMERCIAL SITE DESIGN
(919) 848-6121, FAX: (919) 848-3741
WWW.CSITEDESIGN.COM
8312 CREEDMOOR ROAD
RALEIGH, NORTH CAROLINA 27613

McDonald's®
RALEIGH REGION
4601 SIX FORKS ROAD - SUITE 200 - RALEIGH, N.C. 27609

THESE PLANS AND SPECIFICATIONS ARE THE PROPERTY OF McDONALD'S CORPORATION AND SHALL NOT BE REPRODUCED WITHOUT THEIR WRITTEN PERMISSION.

OFFICE
ADDRESS

PLAN APPROVAL

SIGNATURE (2 REQUIRED)	DATE
REGIONAL MGR.	
REGIONAL DEV. DIRECTOR	
REGIONAL CONSTRUCTION MGR.	
REGIONAL REAL ESTATE MGR.	

CO-SIGN SIGNATURES

AREA CONSTRUCTION MGR.	
CONTRACTOR	

STATUS	DATE	BY
FINAL	-	-
PLAN CHECKED	-	-
AS-BUILT	-	-

C-5
GRADING/EROSION CONTROL PLAN

X:\MCD - McDonalds\1216 - Wilmington, NC @ Carolina Beach Rd 32.0062%\CAD\MCD1216-GP.dwg, 7/16/2013 10:08:07 AM, frankiaw

ENVIRONMENTAL NOTE:

EXISTING ENVIRONMENTAL REMEDIATION SYSTEM OF MONITORING WELLS, PIPES, AND OTHER APPERTENANCES ARE TO REMAIN. CONTRACTOR TO USE CAUTION WHEN PERFORMING ANY CONSTRUCTION OR DEMOLITION ACTIVITIES IN THE VICINITY OF THESE FEATURES. CONTRACTOR SHALL BE RESPONSIBLE FOR THE REPAIR OF ANY DAMAGE TO SYSTEM RESULTING FROM SITE CONSTRUCTION. ADJUST MONITORING WELL RIM ELEVATIONS TO PROPOSED FINAL GRADE.

LABEL	1) GROUND STABILIZATION		
	SITE AREA DESCRIPTION	STABILIZATION TIME FRAME	STABILIZATION TIME FRAME EXCEPTIONS
(cross-hatch)	• PERIMETER DIKES, SWALES, DITCHES AND SLOPES	7 DAYS	NONE
	• HIGH QUALITY WATER (HQW) ZONES	7 DAYS	NONE
	• SLOPES STEEPER THAN 3:1	7 DAYS	IF SLOPES ARE 10' OR LESS IN LENGTH AND ARE NOT STEEPER THAN 2:1, 14 DAYS ARE ALLOWED.
(hatch)	• SLOPES 3:1 OR FLATTER	14 DAYS	7 DAYS FOR SLOPES GREATER THAN 50 FEET IN LENGTH
	• ALL OTHER AREAS WITH SLOPES FLATTER THAN 4:1	14 DAYS	NONE (EXCEPT FOR PERIMETERS AND HQW ZONES)

2) BUILDING WASTES HANDLING

- NO PAINT OR LIQUID WASTES IN STREAM OR STORM DRAINS
- DEDICATED AREAS FOR DEMOLITION, CONSTRUCTION AND OTHER WASTES MUST BE LOCATED 50' FROM STORM DRAINS AND STREAMS UNLESS NO REASONABLE ALTERNATIVES AVAILABLE
- EARTHEN-MATERIALS STOCKPILES MUST BE LOCATED 50' FROM STORM DRAINS AND STREAMS UNLESS NO REASONABLE ALTERNATIVES AVAILABLE.
- CONCRETE MATERIALS MUST BE CONTROLLED TO AVOID CONTACT WITH SURFACE WATERS, WETLANDS, OR BUFFERS.

3) INSPECTIONS

- SAME WEEKLY INSPECTION REQUIREMENTS.
- SAME RAIN GUAGE & INSPECTIONS AFTER 0.5" RAIN EVENT.
- INSPECTIONS ARE ONLY REQUIRED DURING "NORMAL BUSINESS HOURS".
- INSPECTION REPORTS MUST BE AVAILABLE ON-SITE DURING BUSINESS HOURS UNLESS A SITE-SPECIFIC EXEMPTION IS APPROVED.
- RECORDS MUST BE KEPT FOR 3 YEARS AND AVAILABLE UPON REQUEST.
- ELECTRONICALLY-AVAILABLE RECORDS MAY BE SUBSTITUTED UNDER CERTAIN CONDITIONS.

4) SEDIMENT BASINS

- OUTLET STRUCTURES MUST WITHDRAW FROM BASIN SURFACE UNLESS DRAINAGE AREA IS LESS THAN 1 ACRE.
- USE ONLY DWQ-APPROVED FLOCCULANTS.

NPDES - SPECIFIC PLAN SHEETS NOTES

1. THIS PAGE IS SUBMITTED TO COMPLY WITH NPDES GENERAL STORMWATER PERMIT NCG010000:
2. THIS PAGE CAN BE APPROVED BY THE CITY PURSUANT TO NPDES GENERAL STORMWATER PERMIT NCG010000 ONLY;
3. THIS PAGE OF THE APPROVED PLANS IS ENFORCEABLE EXCLUSIVELY PURSUANT TO NPDES GENERAL STORMWATER PERMIT NCG010000;
4. THE CITY IS NOT AUTHORIZED TO ENFORCE THIS PAGE OF THE PLANS AND IT IS NOT A PART OF THE APPROVED PLANS FOR THE PURPOSES OF ENFORCEMENT ACTION UNDER THE CITY CODE.

NOTE:

SEE SHEET C- FOR GRADING / EROSION CONTROL NOTES.

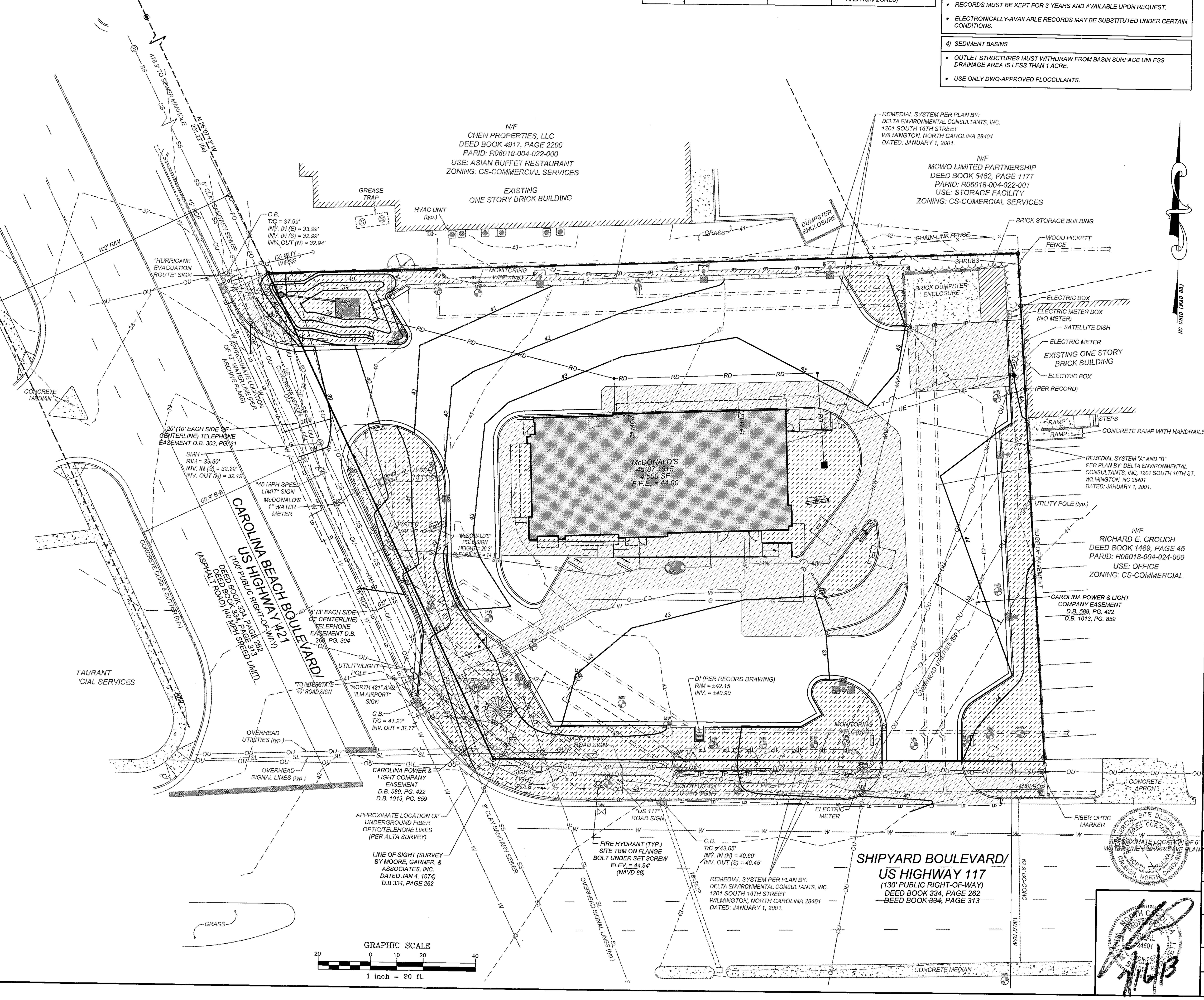

EXISTING LEGEND

▲	CALCULATED POINT	AC =	ACRES
◉	EXISTING IRON PIPE	ACSM =	AMERICAN CONGRESS ON SURVEYING AND MAPPING
	BORE HOLE	ALTA =	AMERICAN LAND TITLE ASSOCIATION
o	IRON PIPE SET	B.M. =	BOOK OF MAPS
Ⓢ	SANITARY SEWER MANHOLE	EIP =	EXISTING IRON PIPES
Ⓒ	SANITARY SEWER CLEANOUT	ELEV =	ELEVATION
WV	WATER VALVE	FIRM =	FLOOD INSURANCE RATE MAP
	WATER METER	GPS =	GLOBAL POSITIONING SYSTEM
	FIRE HYDRANT	HUD =	HOUSING URBAN DEVELOPMENT
Ⓣ	TELEPHONE PEDESTAL	HYD =	FIRE HYDRANT
Ⓣ	TELEPHONE MANHOLE	INV =	INVERT
Ⓔ	ELECTRIC BOX	IPS =	IRON PIPE SET
	LIGHT POLE	LLC =	LIMITED LIABILITY COMPANY
	POWER POLE	MPH =	MILES PER HOUR
	CURB INLET	MSL =	MEAN SEA LEVEL
Ⓓ	STORM DRAINAGE MANHOLE	N/F =	NOW OR FORMERLY
□	YARD INLET	NSPS =	NATIONAL SOCIETY OF PROFESSIONAL SURVEYORS
=========	STORM DRAIN	NTS =	NOT TO SCALE
——OU——	OVERHEAD UTILITIES	R.C.P. =	REINFORCED CONCRETE PIPE
——UE——	UNDERGROUND ELECTRIC	R/W =	RIGHT-OF-WAY
——UT——	UNDERGROUND TELEPHONE	SF =	SQUARE FOOT
——W——	WATER LINE	S.R. =	STATE ROAD
——SS——	SANITARY SEWER LINE	TBM =	TEMPORARY BENCH MARK
——G——	GAS LINE	TWSP =	TOWNSHIP
—X——X—	FENCE LINE	TYP =	TYPICAL
——FO——	FIBER OPTIC LINE		
————	PROPERTY LINE		

LEGEND

O	STORM DRAIN MANHOLE (DMH)		SILT FENCE OUTLET
■	DROP INLET (DI)		INLET PROTECTION
▬	CURB INLET (CB)	•	BUILDING DOWNSPOUT
	STORM PIPE	—SF—	SILT FENCE
	TOP OF CURB / BOTTOM OF CURB	—TP—	TREE PROTECTION FENCE
		⇒⇒⇒	DIVERSION DITCH
	SPILL CURB	—LD—	LIMITS OF DISTURBANCE
■	INLINE DRAIN		FLARED END SECTION
—RD—	ROOF DRAIN: 8" CORRUGATED PLASTIC, 3' MIN. COVER, 1% MIN. SLOPE, PVC IN TRAFFIC AREAS, CLEANOUTS LOCATED @ ALL BENDS		CONSTRUCTION ENTRANCE

TW=XXX.XX TW IS GROUND AT TOP OF WALL
BW=XXX.XX BW IS GROUND AT BOTTOM OF WALL

PAVING SPECIFICATIONS

CONTRACTOR TO REFER TO SOILS REPORT PREPARED BY ECS, PROJECT NUMBER 22-18134-B DATED 10-19-12.

SITE: 3" ASPHALT SURFACE (9F9.5A) AND 8" ABC STONE

NCDOT: 2" ASPHALT SURFACE (S9.5B)
3" INTERMEDIATE (I190B)
5" BASE (B25.0B)

NOTE:
McDONALD'S ENGINEER RESERVES THE RIGHT TO REQUEST A COMPACTION TEST AND/OR A CORE SAMPLE. IF TESTS PROVE CORRECT, PER ABOVE SPECIFICATION, TESTS WILL BE AT THE EXPENSE OF McDONALD'S, OTHERWISE GENERAL CONTRACTOR WILL BE CHARGED.

PARKING INFORMATION

TOTAL SPACES							
45	31	SPACES	9.0'	X	18.0'	@ 60°
	12	SPACES	9.0'	X	20.0'	@ 60°
	2	SPACES (HANDICAP)	8.0'	X	18.0'	@ 60°
	-	SPACES	9.0'	X	18.0'	@ 90°

UTILITY INFORMATION

	SIZE & TYPE	LOCATION
SANITARY SEWER	8" CLAY	ALONG CAROLINA BEACH RD (SAME SIDE)
STORM SEWER	15" & 18" RCP	ALONG CAROLINA BEACH RD & SHIPYARD BLVD.
WATER	16" PUBLIC	ALONG CAROLINA BEACH RD & SHIPYARD BLVD.
GAS	2" MAIN	ALONG CAROLINA BEACH RD (OPPOSITE SIDE)
ELECTRIC	OVERHEAD	ALONG CAROLINA BEACH RD & SHIPYARD BLVD.
TELEPHONE	OVERHEAD	ALONG CAROLINA BEACH RD
FIRE HYDRANT	PUBLIC	NEAR SW CORNER OF SITE

SURVEY INFORMATION

PREPARED BY: COMMERCIAL SITE DESIGN, PLLC
8312 CREEDMOOR ROAD
RALEIGH, NORTH CAROLINA 27613
PHONE: (919) 848-6121

DATE OF ORIGINAL FIELD SURVEY: OCTOBER 10, 2012 DATE OF MAP: NOVEMBER 6, 2012

PLAN SCALE: 1" = 20'

STREET ADDRESS
2543 CAROLINA BEACH ROAD

CITY	STATE
WILMINGTON	NORTH CAROLINA

COUNTY
NEW HANOVER

TAX PARCEL NUMBER	LOCATION CODE NUMBER
R06018-004-023-000	32-0062
CSD FILENAME: MCD1216-NPDES	

REV	DATE	DESCRIPTION	BY	ISSUE/REF
1	12-12-12	PERMIT ISSUE	JWR	
2	1-16-13	CITY OF WILMINGTON COMMENTS	STH	
3	03-28-13	CITY OF WILMINGTON COMMENTS #2 & NCDOT	JWR	
4	05-13-13	CITY OF WILMINGTON COMMENTS #3 & NCDOT	JWR	
5	06-24-13	CITY OF WILMINGTON COMMENTS #4 & NCDOT	JWR	

COMMERCIAL SITE DESIGN
8312 CREEDMOOR ROAD
RALEIGH, NORTH CAROLINA 27613
(919) 848-6121, FAX: (919) 848-3741
WWW.CSITEDESIGN.COM

McDonald's®

THESE PLANS AND SPECIFICATIONS ARE THE PROPERTY OF McDONALD'S CORPORATION AND SHALL NOT BE REPRODUCED WITHOUT THEIR WRITTEN PERMISSION.

OFFICE: RALEIGH REGION
ADDRESS: 4601 SIX FORKS ROAD - SUITE 200 - RALEIGH, N.C. 27609

PLAN APPROVAL

SIGNATURE (2 REQUIRED)	DATE
REGIONAL MGR.	
REGIONAL DEV. DIRECTOR	
REGIONAL CONSTRUCTION MGR.	
REGIONAL REAL ESTATE MGR.	

CO-SIGN SIGNATURES

AREA CONSTRUCTION MGR.	
CONTRACTOR	

STATUS	DATE	BY
FINAL	-	-
PLAN CHECKED	-	-
AS-BUILT	-	-

C-5a
NPDES STABILIZATION PLAN

X:\MCD - McDonalds\1216 - Wilmington, NC @ Carolina Beach Rd 32-0062\CAD\MCD1216-NPDES.dwg, 7/16/2013 10:09:14 AM, frankiew

UTILITY KEYNOTES:

1. 1 1/2" DOMESTIC WATER METER, CONTRACTOR SHALL COORDINATE WITH UTILITY.
2. 2" DOMESTIC REDUCE PRESSURE BACKFLOW PREVENTER (MODEL WATTS 909 M1 OR CITY APPROVED EQUIVALENT) IN ABOVE-GROUND HOTBOX ENCLOSURE.
3. 2" CPVC DOMESTIC WATER SERVICE, CONTRACTOR SHALL COORDINATE WITH CITY, ALL WATER LINES SHALL HAVE A FINAL COVER DEPTH OF 3'-0" IN NON-TRAFFIC AREAS AND 4'-0" IN TRAFFIC AREAS UNLESS OTHERWISE NOTED.
4. 12" SADDLE WITH 2" CORPORATION STOP, CONTRACTOR SHALL COORDINATE WITH UTILITY.
5. EXISTING FIRE HYDRANT.
6. REUSE RELOCATED 1" IRRIGATION WATER METER AND 1" WATER LINE, CONTRACTOR SHALL COORDINATE WITH IRRIGATION CONTRACTOR AND UTILITY.
7. 1" IRRIGATION REDUCE PRESSURE BACKFLOW PREVENTER (MODEL WATTS 009M3QT OR CITY APPROVED EQUIVALENT) IN ABOVE GROUND HOTBOX ENCLOSURE, CONTRACTOR SHALL COORDINATE WITH IRRIGATION CONTRACTOR AND UTILITY.
8. COORDINATE IRRIGATION CONNECTION AND SLEEVE SIZE WITH IRRIGATION CONTRACTOR.
9. MIXED WATER TO HOSE BIB IN TRASH CORRAL. NOT TO BE USED FOR TRASH CONTAINER WASHING.
10. 4" PVC SANITARY SEWER LINE (SERVICES SHALL BE PVC SDR 35 WITHIN R/W, THEN PVC SCHEDULE 40 TO BUILDING), (BEDDING AND COVER PER SUPPLIER SPECIFICATIONS). NOTE: 1/4"/FT MIMINUM SLOPE FOR 4" LINES AND 1/8"/FT MINIMUM SLOPE FOR 6" LINES. ALL SEWER LINES SHALL HAVE A FINAL COVER DEPTH OF 4'-0" IN NON-TRAFFIC AREAS AND 5'-0" IN TRAFFIC AREAS UNLESS OTHERWISE NOTED.
11. SANITARY SEWER CLEANOUT PLACED AT 50' INTERVALS, SEE DETAIL SHEET.
12. TRAFFIC RATED SANITARY SEWER CLEANOUT PLACE AT 50' INTERVALS, SEE DETAIL SHEET.
13. 1300 GALLON PROCEPTOR GREASE TRAP, PER DETAIL SHEET.
14. PROPOSED UTILITY POLE MOUNTED TRANSFORMER, CONTRACTOR SHALL COORDINATE LOCATION AND SIZE WITH ELECTRIC UTILITY.
15. POLE MOUNTED AREA LIGHT, SEE LIGHTING PLAN. ALL LOT LIGHT WIRES TO BE CONTINUOUS RUN FROM PANELS TO LOT LIGHTS WITH NO SPLICES, CONTRACTOR TO COODINATE.
16. UNDERGROUND ELECTRIC SERVICE, CONTRACTOR SHALL COORDINATE WITH ELECTRIC UTILITY.
17. INSTALL ONE - 1" PVC ELECTRICAL CONDUIT FOR ELECTRICAL SERVICE TO TRASH CORRAL.
18. UNDERGROUND TELEPHONE SERVICE, CONTRACTOR SHALL COORDINATE WITH TELEPHONE COMPANY.
19. GAS SERVICE, CONTRACTOR SHALL COORDINATE WITH GAS COMPANY.
20. RELOCATE WATER METER, CONDUIT AND VALVES, CONTRACTOR SHALL COORDINATE WITH UTILITY COMPANY
21. RELOCATE UTILITY POLE AND/OR GUY WIRES, CONTRACTOR SHALL COORDINATE WITH UTILITY COMPANY AND CITY OF WILMINGTON TRAFFIC ENGINEER.
22. CONVERT EXISTING SANITARY MANHOLE TO TRAFFIC RATED AND ADJUST RIM TO PROPOSED GRADE, CONTRACTOR SHALL COORDINATE WITH UTILITY COMPANY
23. RELOCATED UTILITY POLE LOCATION. POLES MUST HAVE 30" BUFFER FROM ANY UNDERGROUND UTILITY. RELOCATE UNDERGROUND UTILITIES OR POSITION POLES AS NECESSARY TO ACCOMMODATE. CONTRACTOR TO COORDINATE WITH ALL APPLICABLE UTILITY COMPANIES.

UTILITY NOTES:

1. THE CONTRACTOR SHALL VERIFY LOCATION AND ELEVATION OF ALL UNDERGROUND UTILITIES. THE LOCATION OF ALL EXISTING UTILITIES ARE NOT NECESSARILY SHOWN ON THE PLANS AND WHERE SHOWN ARE ONLY APPROXIMATE. THE CONTRACTOR SHALL ON HIS INITIATIVE AND AT NO EXTRA COSTS HAVE LOCATED ALL UNDERGROUND LINES AND STRUCTURES AS NECESSARY. NO CLAIMS FOR DAMAGES OR EXTRA COMPENSATION SHALL ACCRUE TO THE CONTRACTOR FROM THE PRESENCE OF SUCH PIPE, OTHER OBSTRUCTIONS OR FROM ANY DELAY DUE TO REMOVAL OR REARRANGEMENT OF THE SAME. THE CONTRACTOR SHALL BE RESPONSIBLE FOR ANY DAMAGE TO UNDERGROUND STRUCTURES. THE CONTRACTOR IS RESPONSIBLE FOR CONTACTING ALL NON-SUBSCRIBING UTILITIES. THE CONTRACTOR(S) SHALL CONTACT NORTH CAROLINA "ONE-CALL" AT 800-632-4949 FOR ASSISTANCE IN LOCATING EXISTING UTILITIES. CALL AT LEAST 48 HOURS PRIOR TO ANY DIGGING.
2. UTILITY INFORMATION SHOWN HEREON WAS OBTAINED FROM THE BEST AVAILABLE SOURCE AND MAY OR MAY NOT BE EITHER ACCURATE OR COMPLETE. THE GENERAL CONTRACTOR IS RESPONSIBLE FOR VERIFYING EXACT LOCATIONS OF EXISTING UTILITIES AND IS RESPONSIBLE FOR ANY DAMAGE TO ANY UTILITIES, EITHER PUBLIC OR PRIVATE, SHOWN HEREON OR NOT SHOWN HEREON. ANY REPAIRS SHALL BE DONE TO THE SATISFACTION OF THE APPROPRIATE UTILITY COMPANY.
3. THE GENERAL CONTRACTOR SHALL CONFIRM ALL NEW UTILITY TAP LOCATIONS WITH THE UTILITY OWNERS.
4. IT IS THE RESPONSIBILITY OF THE GENERAL CONTRACTOR TO VERIFY THE ACTUAL LOCATION AND AVAILABILITY OF ALL EXISTING AND PROPOSED UTILITIES IN THE FIELD PRIOR TO GROUND BREAKING.
5. MINIMUM COVER FOR CONDUITS SHALL BE 36 INCHES UNLESS OTHERWISE SHOWN OR NOTED ON THESE PLANS.
6. ALL MANHOLES, VALVES AND MONUMENT FRAMES SHALL BE SET TO FINISH GRADE AFTER PAVING.
7. THE CONTRACTOR SHALL COMPLY WITH THE RULES AND REGULATIONS OF THE STATE CONSTRUCTION SAFETY ORDERS. TRENCHES SHALL BE SHORED IN ACCORDANCE WITH OSHA.
8. OCCUPATIONAL HEALTH AND SAFETY ADMINISTRATION (OSHA) STANDARDS FOR EXCAVATIONS; FINAL RULE 29CFR PART 1926, SUBPART "P" APPLIES TO ALL EXCAVATIONS EXCEEDING 5 FEET IN DEPTH. EXCAVATION EXCEEDING TWENTY (20) FEET IN DEPTH REQUIRES THE DESIGN OF A TRENCH SAFETY SYSTEM BY A REGISTERED PROFESSIONAL ENGINEER.
9. EQUIPMENT AND PRODUCTS OTHER THAN THOSE SPECIFIED MAY BE USED PROVIDED PRIOR APPROVAL HAS BEEN OBTAINED FROM THE OWNER IN WRITING PRIOR TO ORDERING OR INSTALLATION. THE CONSTRUCTION SHALL WAIVE ANY CLAIM FOR ADDITIONAL COST RELATED TO THE SUBSTITUTION OF ALTERNATE EQUIPMENT.
10. CONTRACTOR SHALL MAINTAIN AN "AS-BUILT" SET OF DRAWINGS TO RECORD THE EXACT LOCATION OF ALL PIPING PRIOR TO CONCEALMENT. DRAWINGS SHALL BE GIVEN TO THE OWNER UPON COMPLETION OF THE PROJECT WITH A COPY OF THE TRANSMITTAL LETTER TO THE ENGINEER.
11. ALL UTILITY CONSTRUCTION SHALL BE IN ACCORDANCE WITH CAPE FEAR PUBLIC UTILITY AUTHORITY AND CROSS CONNECTION CONTROL REGULATIONS AND STANDARDS.
12. SITE UTILITY CONTRACTOR TO PROVIDE WATER, SANITARY SEWER, AND ROOF DRAIN LEADERS TO WITHIN 5 FEET OF THE BUILDING. CONTRACTOR SHALL COORDINATE SITE PLAN CONNECTIONS WITH THE ARCHITECTURAL BUILDING PLANS.
13. RELATION OF WATER MAINS TO SEWERS:
    - A. LATERAL SEPARATION OF SEWER AND WATER MAINS: WATER MAINS SHALL BE LAID AT LEAST 10 FEET LATERALLY FROM EXISTING OR PROPOSED SEWERS UNLESS LOCAL CONDITIONS OR BARRIERS PREVENT A 10 FOOT LATERAL SEPARATION, IN WHICH CASE:
        1. THE WATER MAIN IS LAID IN A SEPARATE TRENCH, WITH THE ELEVATION OF THE BOTTOM OF THE WATER MAIN AT LEAST 18 INCHES ABOVE THE TOP OF THE SEWER, OR
        2. THE WATER MAIN IS LAID IN THE SAME TRENCH AS THE SEWER LINE WITH THE WATER MAIN LOCATED AT ONE SIDE ON A BENCH OF UNDISTURBED EARTH, AND ABOVE THE TOP OF THE SEWER.
    - B. CROSSING A WATER MAIN OVER A SEWER MAIN: WHENEVER IT IS NECESSARY FOR A WATER MAIN TO CROSS OVER A SEWER THE WATER MAIN SHALL BE LAID AT SUCH ELEVATION THAT THE BOTTOM OF THE WATER MAIN IS AT LEAST 18 INCHES ABOVE THE TOP OF THE SEWER MAIN, UNLESS LOCAL CONDITIONS OR BARRIERS PREVENT AN 18 INCH VERTICAL SEPARATION - IN WHICH CASE BOTH THE WATER MAIN AND SEWER MAIN SHALL BE CONSTRUCTED OF FERROUS MATERIALS AND WITH JOINTS THAT ARE EQUIVALENT TO WATER MAIN STANDARDS FOR A DISTANCE OF 10 FEET ON EACH SIDE OF THE POINT OF CROSSING.
    - C. CROSSING A WATER MAIN UNDER A SEWER MAIN: WHENEVER IT IS NECESSARY FOR A WATER MAIN TO CROSS UNDER A SEWER MAIN BOTH THE WATER MAIN AND SEWER MAIN SHALL BE CONSTRUCTED OF FERROUS MATERIALS AND WITH JOINTS EQUIVALENT TO WATER MAIN STANDARDS FOR A DISTANCE OF 10 FEET ON EACH SIDE OF THE POINT OF CROSSING.
    - D. CROSSING A SEWER LINE OVER OR UNDER A STORM DRAIN: WHENEVER IT IS NECESSARY FOR A SEWER LINE TO CROSS A STORM DRAIN PIPE, THE SEWER LINES SHALL BE LAID AT SUCH AN ELEVATION THAT THE OUTSIDE OF THE SEWER LINE NEAREST TO THE OUTSIDE OF THE STORM DRAIN PIPE SHALL MAINTAIN A 12 INCH CLEAR SEPARATION DISTANCES, OR ENCASED IN EITHER CONCRETE OR DUCTILE IRON PIPE FOR AT LEAST 5 FEET ON EITHER SIDE OF THE CROSSING.
14. UNDERGROUND CONDUITS TO SIGNS, LOT LIGHTS, ETC., SHALL BE PLACED IN GRASS OR LANDSCAPE AREAS WHENEVER POSSIBLE. THE LOCATION OF THE CONDUIT AS SHOWN ON THESE PLANS SHALL BE CONSIDERED TO BE SCHEMATIC WITH ACTUAL LOCATION TO BE VERIFIED BY THE GENERAL CONTRACTOR, PVC SHC. 40 SLEEVES SHALL BE INSTALLED FOR ALL CONDUIT CROSSING UNDER PAVED AREAS.
15. THE CONTRACTOR SHALL COORDINATE WITH ALL UTILITY COMPANIES TO DETERMINE EXACT POINT OF SERVICE CONNECTION AT EXISTING UTILITY. REFER TO THE BUILDING ELECTRICAL AND PLUMBING DRAWINGS FOR UTILITY SERVICE ENTRANCE LOCATIONS, SIZES AND CIRCUITING.

ENVIRONMENTAL NOTE:

EXISTING ENVIRONMENTAL REMEDIATION SYSTEM OF MONITORING WELLS, PIPES, AND OTHER APPERTENANCES ARE TO REMAIN. CONTRACTOR TO USE CAUTION WHEN PERFORMING ANY CONSTRUCTION OR DEMOLITION ACTIVITIES IN THE VICINITY OF THESE FEATURES. CONTRACTOR SHALL BE RESPONSIBLE FOR THE REPAIR OF ANY DAMAGE TO SYSTEM RESULTING FROM SITE CONSTRUCTION. ADJUST MONITORING WELL RIM ELEVATIONS TO PROPOSED FINAL GRADE.

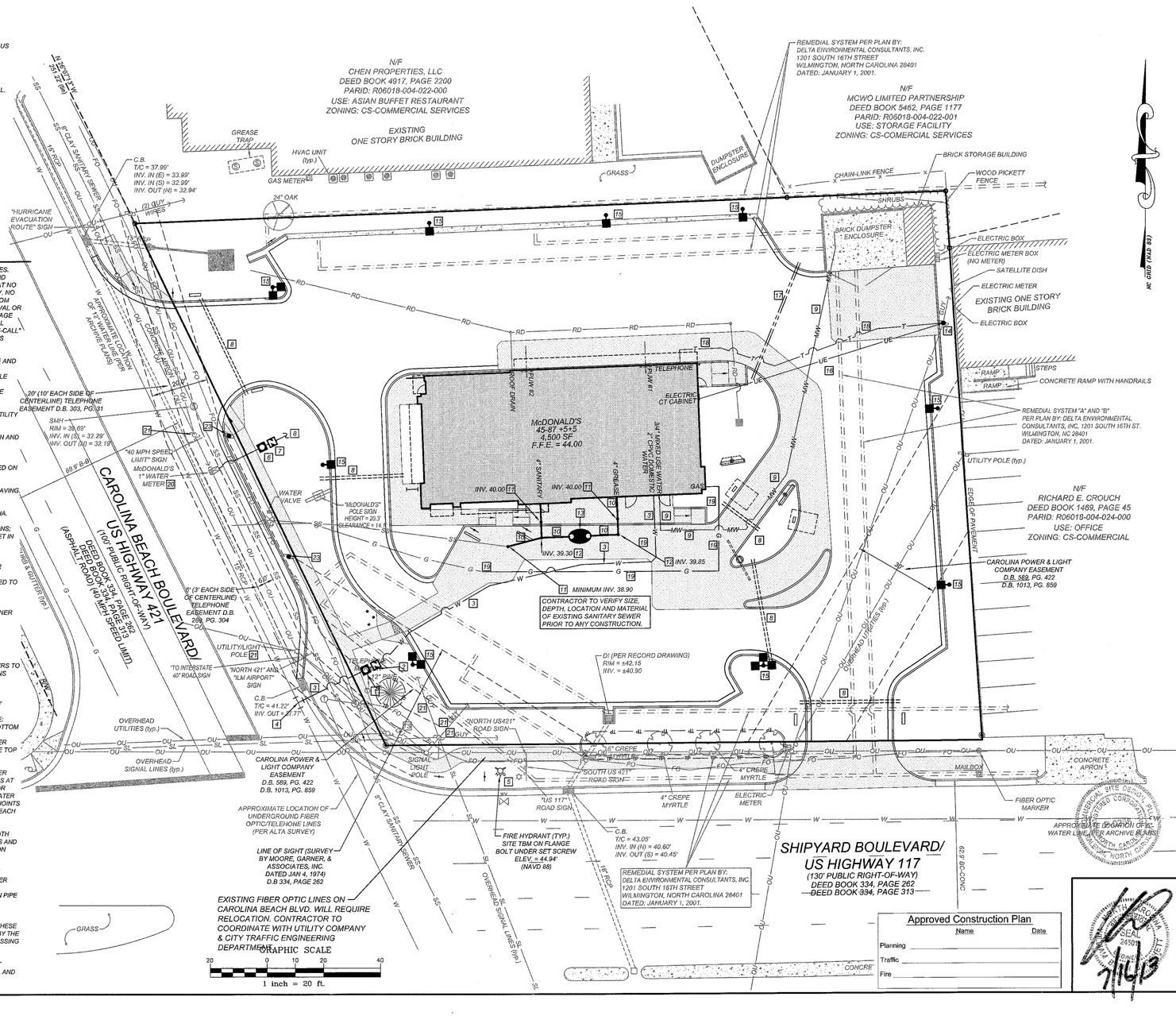

EXISTING LEGEND

▲	CALCULATED POINT	AC =	ACRES
◉	EXISTING IRON PIPE	ACSM =	AMERICAN CONGRESS ON SURVEYING AND MAPPING
◆	BORE HOLE	ALTA =	AMERICAN LAND TITLE ASSOCIATION
○	IRON PIPE SET	B.M. =	BOOK OF MAPS
Ⓢ	SANITARY SEWER MANHOLE	EIP =	EXISTING IRON PIPES
Ⓒ	SANITARY SEWER CLEANOUT	ELEV =	ELEVATION
⋈	WATER VALVE	FIRM =	FLOOD INSURANCE RATE MAP
▣	WATER METER	GPS =	GLOBAL POSITIONING SYSTEM
▤	FIRE HYDRANT	HUD =	HOUSING URBAN DEVELOPMENT
▥	TELEPHONE PEDESTAL	HYD =	FIRE HYDRANT
▦	TELEPHONE MANHOLE	INV =	INVERT
▩	ELECTRIC BOX	IPS =	IRON PIPE SET
☼	LIGHT POLE	LLC =	LIMITED LIABILITY COMPANY
	POWER POLE	MPH =	MILES PER HOUR
CURB INLET	CURB INLET	MSL =	MEAN SEA LEVEL
Ⓓ	STORM DRAINAGE MANHOLE	N/F =	NOW OR FORMERLY
□	YARD INLET	NSPS =	NATIONAL SOCIETY OF PROFESSIONAL SURVEYORS
SD	STORM DRAIN	NTS =	NOT TO SCALE
OU	OVERHEAD UTILITIES	R.C.P. =	REINFORCED CONCRETE PIPE
UE	UNDERGROUND ELECTRIC	R/W =	RIGHT-OF-WAY
UT	UNDERGROUND TELEPHONE	SF =	SQUARE FOOT
W	WATER LINE	S.R. =	STATE ROAD
SS	SANITARY SEWER LINE	TBM =	TEMPORARY BENCH MARK
G	GAS LINE	TWSP =	TOWNSHIP
X	FENCE LINE	TYP =	TYPICAL
FO	FIBER OPTIC LINE		
	PROPERTY LINE		

LEGEND

OU	OVERHEAD UTILITIES	●	SEWER CLEAN OUT
	SANITARY SEWER		FIRE HYDRANT ASSEMBLY
UE	UNDERGROUND ELECTRIC	Ⓢ	SANITARY SEWER MANHOLE (SSMH)
T	TELEPHONE LINE		POLE MOUNTED AREA LIGHT
G	GAS LINE	▣	WATER METER
W	WATER LINE	▨	BACKFLOW PREVENTER
F	FIRE LINE		SIAMESE CONNECTION (FDC)
MW	MIXED WATER	⋈	WATER VALVE
RD	ROOF DRAIN		GREASE TRAP
	IRRIGATION SLEEVE (1) 4"PVC, COORDINATE WITH IRRIGATION CONTRACTOR	⊣	HOSE BIB
◆	UTILITY POLE		

PARKING INFORMATION

TOTAL SPACES						
45	31	SPACES	9.0'	X	18.0'	@ 60°
	12	SPACES	9.0'	X	20.0'	@ 60°
	2	SPACES (HANDICAP)	8.0'	X	18.0'	@ 60°
	-	SPACES	9.0'	X	18.0'	@ 90°

UTILITY INFORMATION

	SIZE & TYPE	LOCATION
SANITARY SEWER	8" CLAY	ALONG CAROLINA BEACH RD (SAME SIDE)
STORM SEWER	15" & 18" RCP	ALONG CAROLINA BEACH RD & SHIPYARD BLVD.
WATER	16" PUBLIC	ALONG CAROLINA BEACH RD & SHIPYARD BLVD.
GAS	2" MAIN	ALONG CAROLINA BEACH RD (OPPOSITE SIDE)
ELECTRIC	OVERHEAD	ALONG CAROLINA BEACH RD & SHIPYARD BLVD.
TELEPHONE	OVERHEAD	ALONG CAROLINA BEACH RD
FIRE HYDRANT	PUBLIC	NEAR SW CORNER OF SITE

SURVEY INFORMATION

PREPARED BY: COMMERCIAL SITE DESIGN, PLLC
8312 CREEDMOOR ROAD
RALEIGH, NORTH CAROLINA 27613
PHONE: (919) 848-6121
DATE OF ORIGINAL FIELD SURVEY: OCTOBER 10, 2012 DATE OF MAP: NOVEMBER 6, 2012

PLAN SCALE: 1" = 20'

STREET ADDRESS
2543 CAROLINA BEACH ROAD

CITY	STATE
WILMINGTON	NORTH CAROLINA

COUNTY
NEW HANOVER

TAX PARCEL NUMBER	LOCATION CODE NUMBER
R06018-004-023-000	32-0062

CSD FILENAME: MCD1216-UP

Approved Construction Plan

	Name	Date
Planning		
Traffic		
Fire		

REV	DATE	DESCRIPTION	BY	ISSUE/REF
		PERMIT ISSUE		
1	12-12-12	CITY OF WILMINGTON COMMENTS	JWR	
2	1-16-13	CITY OF WILMINGTON COMMENTS #2 & NCDOT	STH	
3	03-28-13	CITY OF WILMINGTON COMMENTS #3 & NCDOT	JWR	
4	05-13-13	CITY OF WILMINGTON COMMENTS #4 & NCDOT	JWR	
5	06-24-13		JWR	

COMMERCIAL SITE DESIGN
(919) 848-6121, FAX: (919) 848-3741
WWW.CSITEDESIGN.COM
8312 CREEDMOOR ROAD
RALEIGH, NORTH CAROLINA 27615

McDonald's®
RALEIGH REGION
4801 SW FORKS ROAD - SUITE 200 - RALEIGH, N.C. 27609

THESE PLANS AND SPECIFICATIONS ARE THE PROPERTY OF McDONALD'S CORPORATION AND SHALL NOT BE REPRODUCED WITHOUT THEIR WRITTEN PERMISSION.

PLAN APPROVAL
SIGNATURE (2 REQUIRED) — DATE
REGIONAL MGR.
REGIONAL DEV. DIRECTOR
REGIONAL CONSTRUCTION MGR.
REGIONAL REAL ESTATE MGR.
CO-SIGN SIGNATURES
AREA CONSTRUCTION MGR.
CONTRACTOR
OFFICE
ADDRESS

STATUS	DATE	BY
FINAL	-	-
PLAN CHECKED	-	-
AS-BUILT	-	-

C-6
UTILITY PLAN

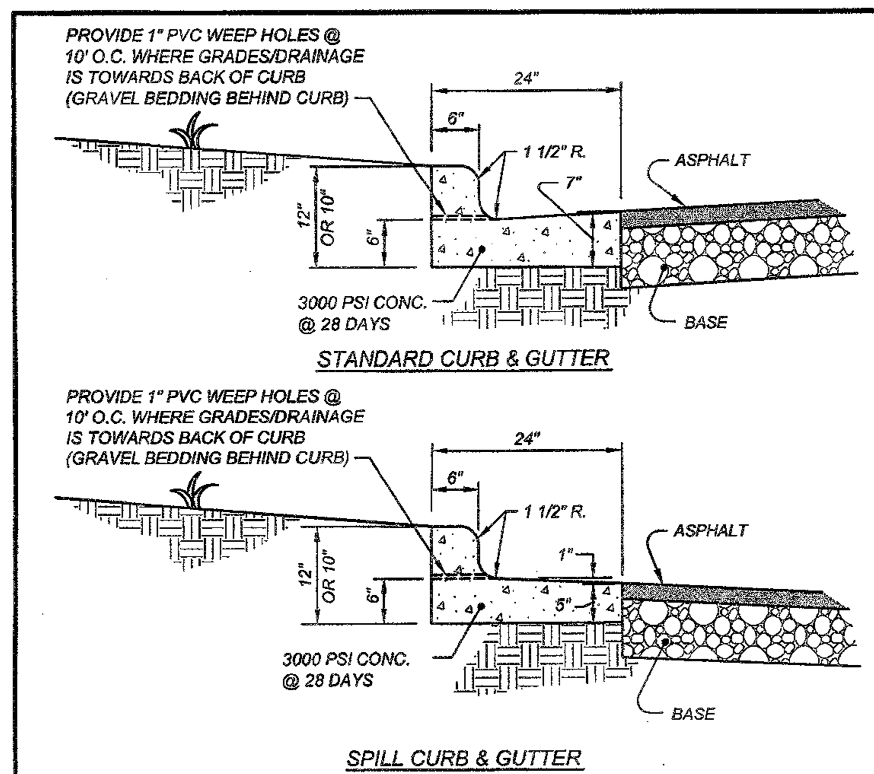

NOTES:

1. SCORE CURB / VALLEY GUTTER AT 15' O.C.
2. PROVIDE 1/2" EXPANSION JOINTS AT 90' O.C.
3. CONTRACTION JOINTS SHALL BE SPACED AT 10' INTERVALS. (A 15' SPACING WILL BE ALLOWED WHEN A MACHINE IS USED.)
4. FINISH ALL CONCRETE WITH CURING COMPOUND.
5. CURB FACE TO BE 4" REVEAL AT ALL HEAD-IN PARKING STALLS.

2'-0" STANDARD CURB AND GUTTER

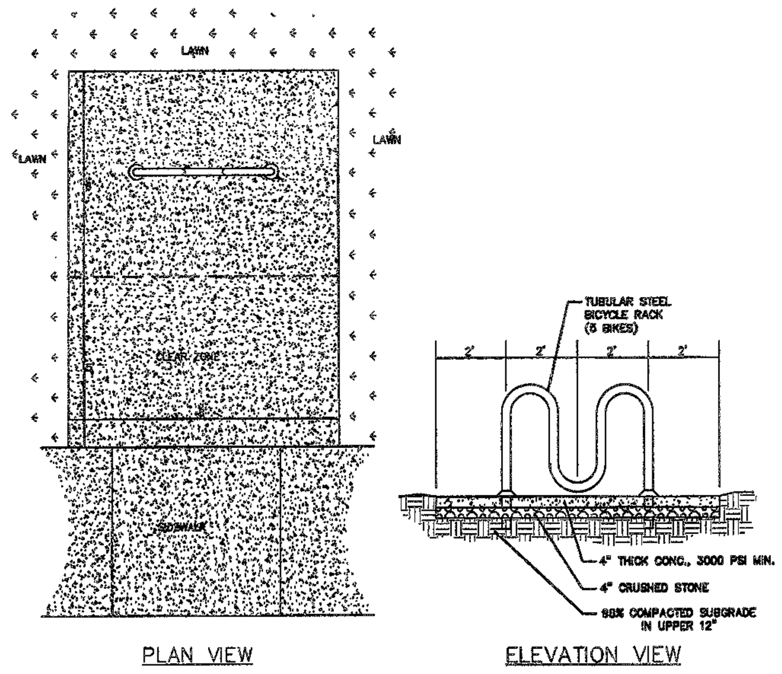

BICYCLE RACK DETAIL

NO SCALE

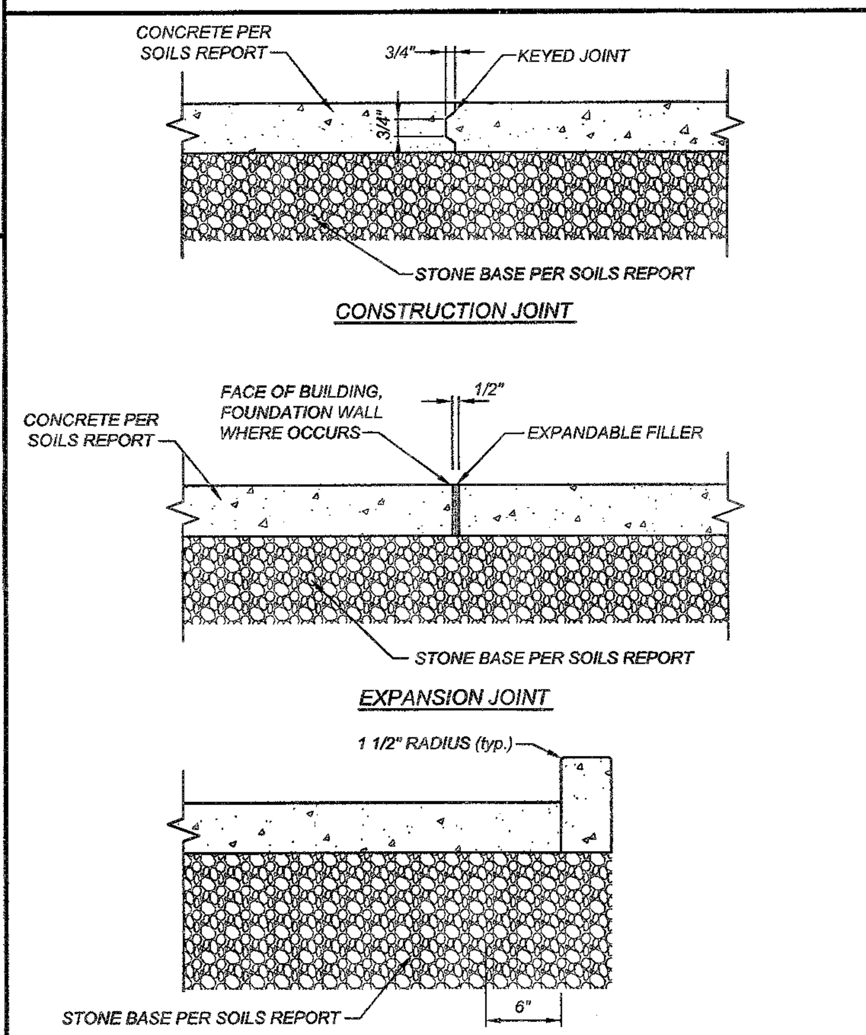

CONCRETE SLAB DETAIL

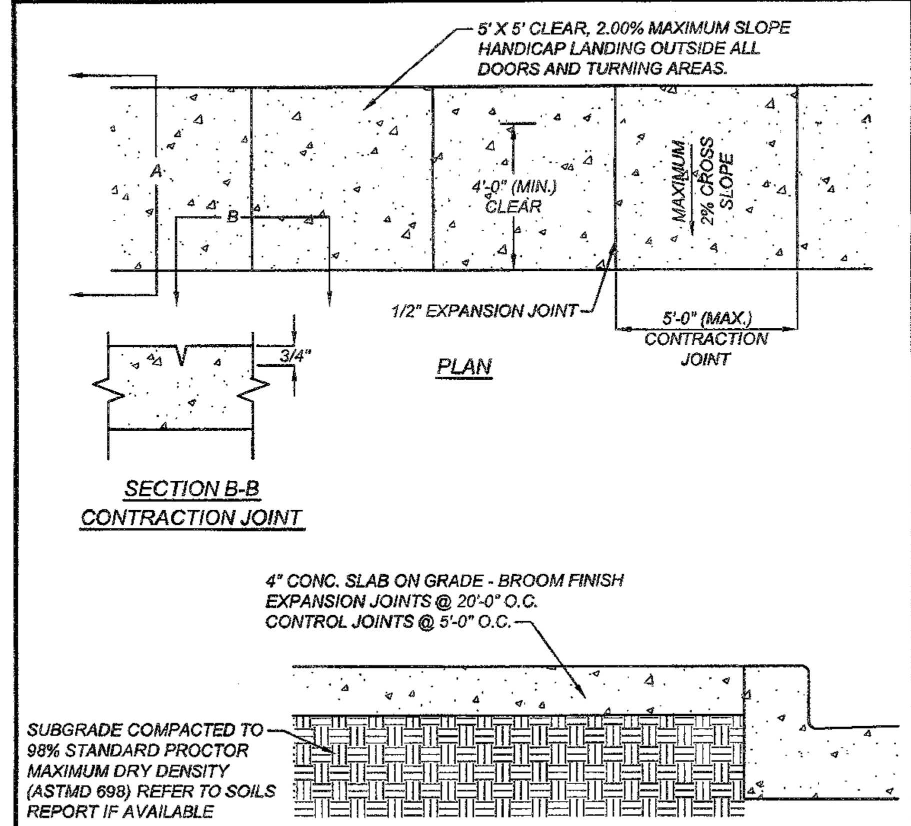

STANDARD CONCRETE SIDEWALK

ISLAND LAYOUT/DRIVE-THRU ELEMENTS NOTES - PRIMARY LANE:

1. DETERMINE THE DISTANCE TO THE CENTERLINE OF THE COD FACE ONLY AFTER THE CONCRETE CURB HAS BEEN EITHER FORMED OR POURED.
2. ONCE THE CONCRETE CURB HAS BEEN FORMED OR POURED, ESTABLISH THE BENCHMARK DISTANCE FROM THE **CENTERLINE OF THE OPEN CASH BOOTH WINDOW (NOT CENTERLINE OF OPENING) TO THE CENTERLINE OF THE COD FACE;** MEASURING FIVE (5) FEET FROM THE FACE OF CURB.
3. ESTABLISH THE BENCHMARK AT THE CENTERLINE OF COD FACE, AT THE FACE OF CURB. USE THIS BENCHMARK TO DETERMINE THE FOUNDATION LOCATIONS FOR THE COD AND THE MENU BOARD.
4. DIMENSIONS TO COD AND MENU BOARD LOCATIONS REFERENCE CIRCULAR FOUNDATION CENTERPOINTS. REFER TO FOUNDATION DETAILS FOR FOUNDATION DIAMETERS AND INSTALLATION REQUIREMENTS ABUTTING CONCRETE CURBS.
5. MENU BOARD TO BE SET AT A 45 DEGREE ANGLE, REFERENCED ALONG THE STRAIGHT CONCRETE CURB SECTION OF THE PRIMARY LANE.

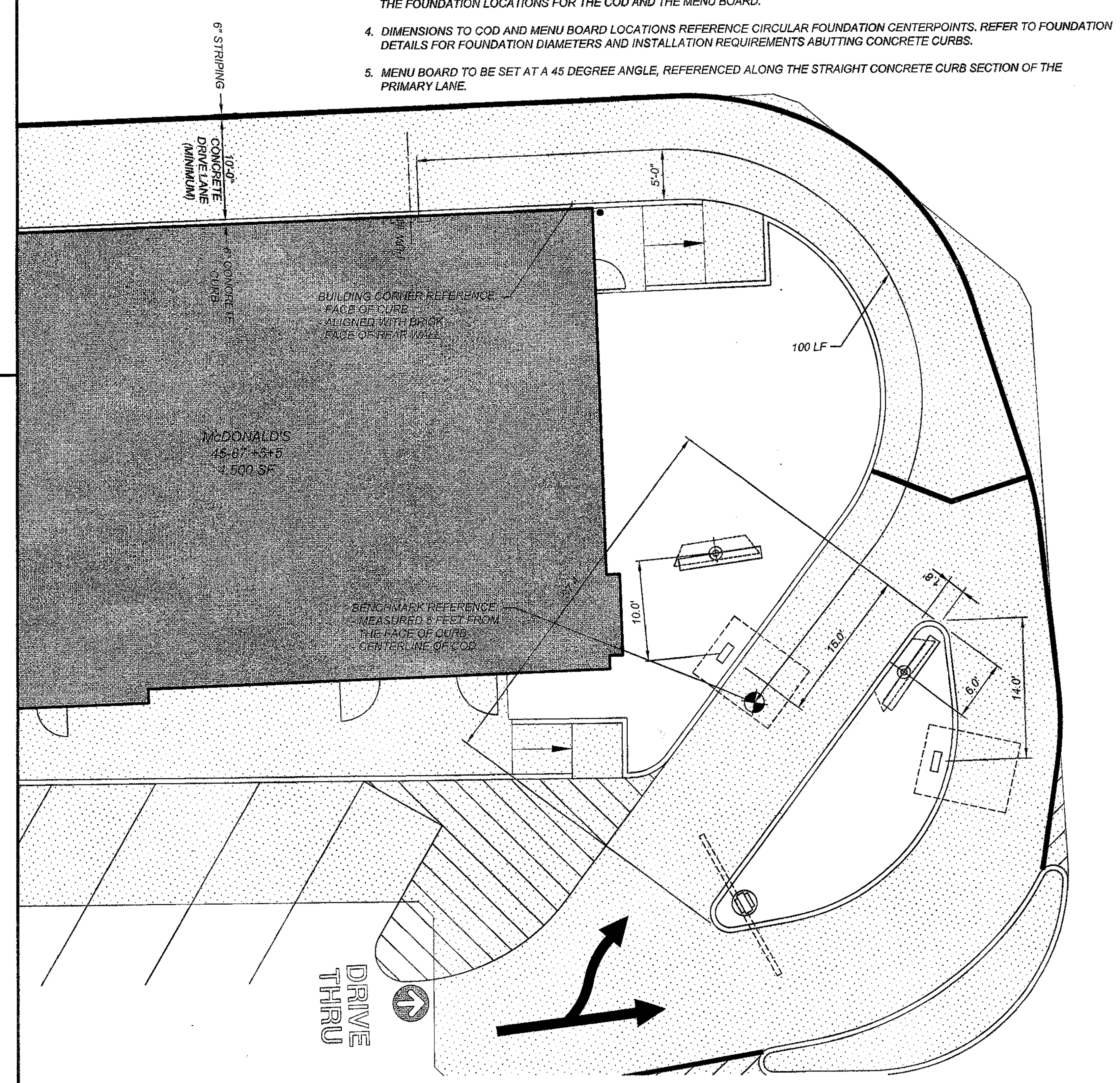

DRIVE-THRU PRIMARY LANE DIMENSIONING PLAN

SCALE: 1" = 10'

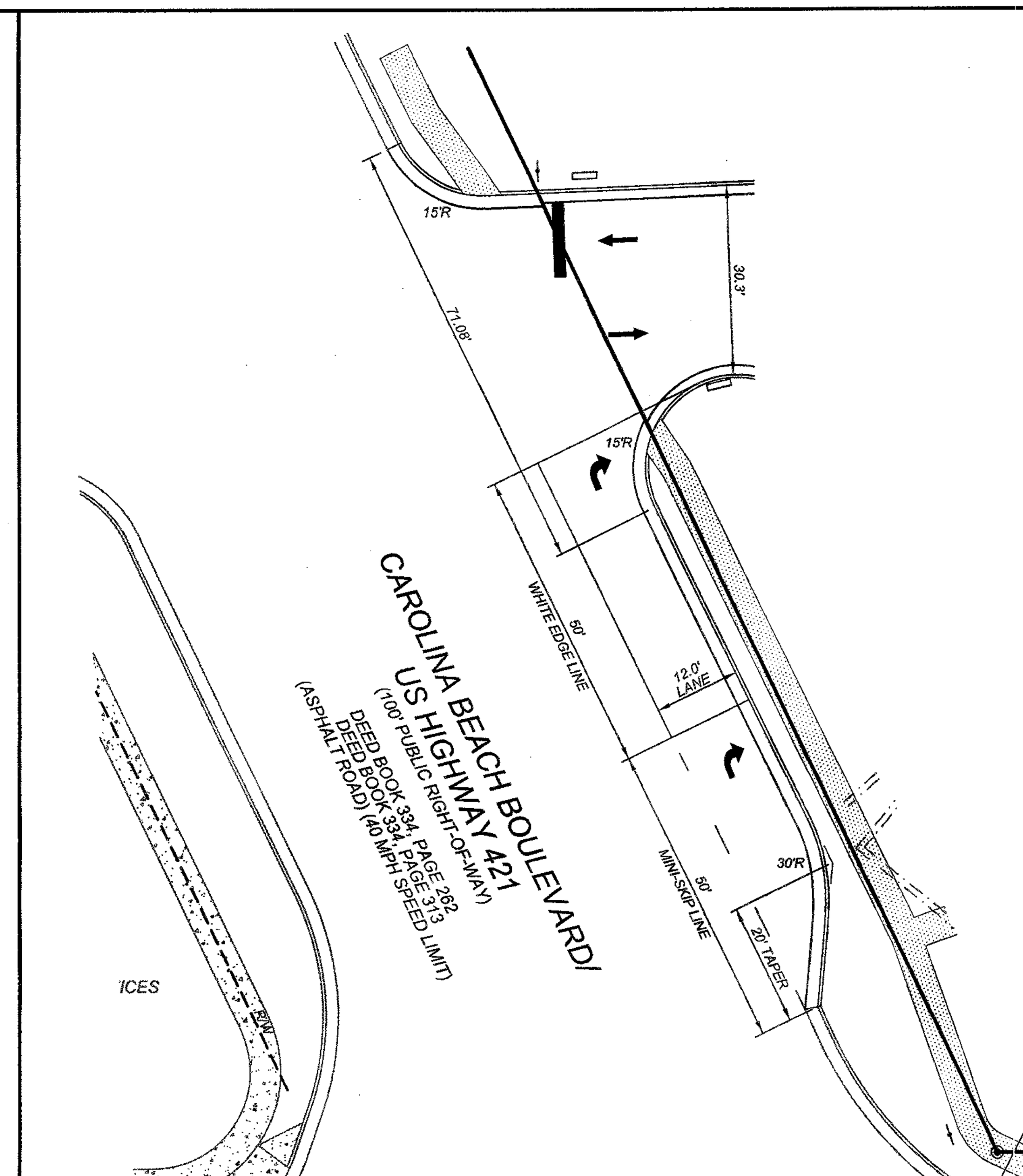

TURN LANE INSET

SCALE: 1" = 20'

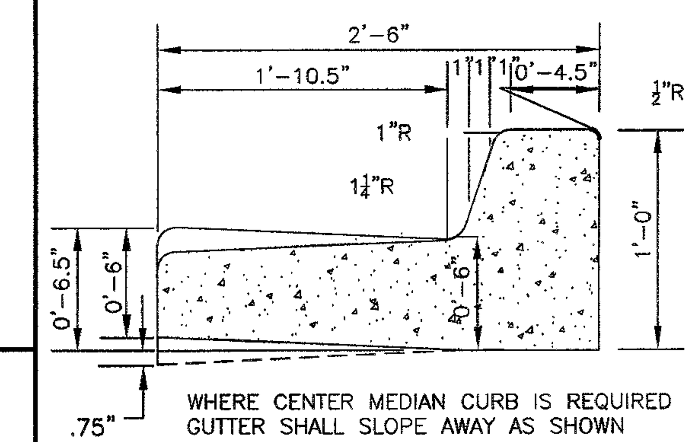

STANDARD CURB SECTION TYPE "A"

SD 7-01
NOT TO SCALE

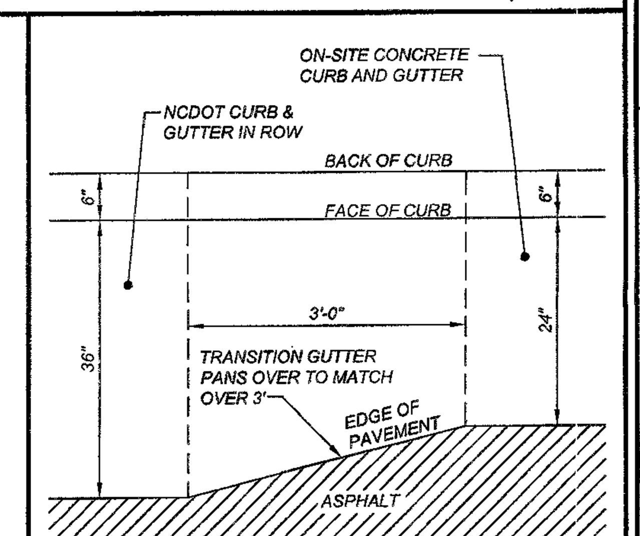

CURB AND GUTTER TRANSITION TO NCDOT

PLAN VIEW
(NOT TO SCALE)

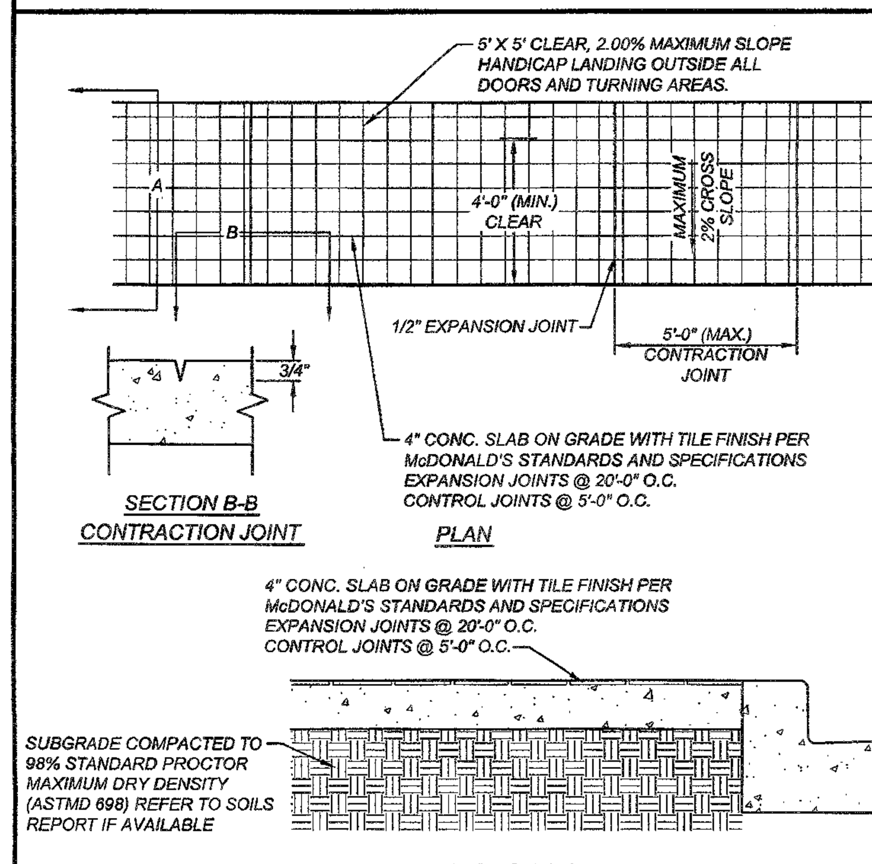

OPTIONAL McDONALD'S TILE CONCRETE SIDEWALK

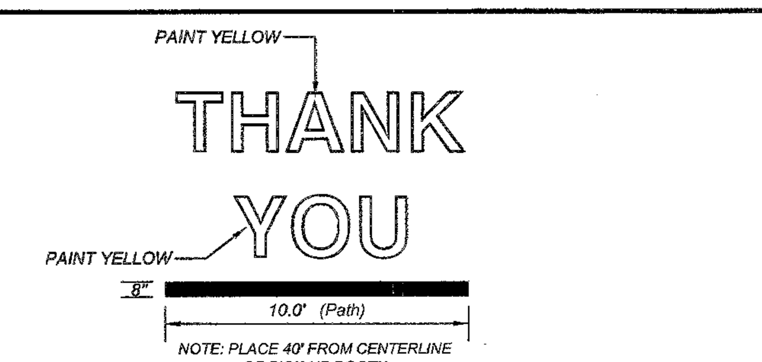

NOTE: MINIMUM FLOW RATE OF 100 SF PER GALLON (PAINT FEDERAL SPECIFICATION: TT-P-1952D).

McDONALD'S "THANK YOU"

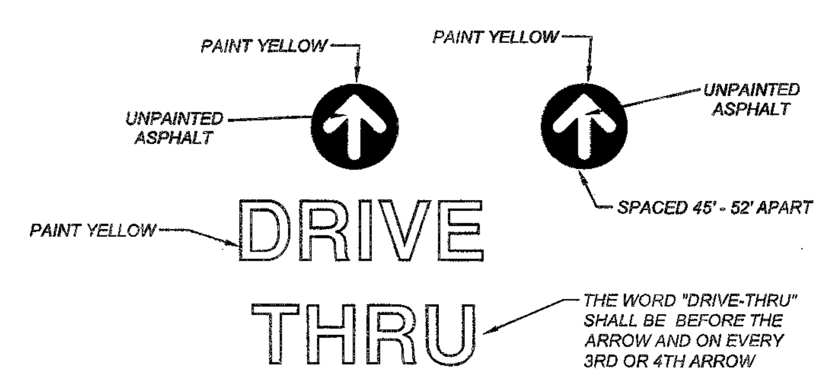

NOTE: MINIMUM FLOW RATE OF 100 SF PER GALLON (PAINT FEDERAL SPECIFICATION: TT-P-1952D).

McDONALD'S "DRIVE-THRU" DIRECTIONAL ARROW

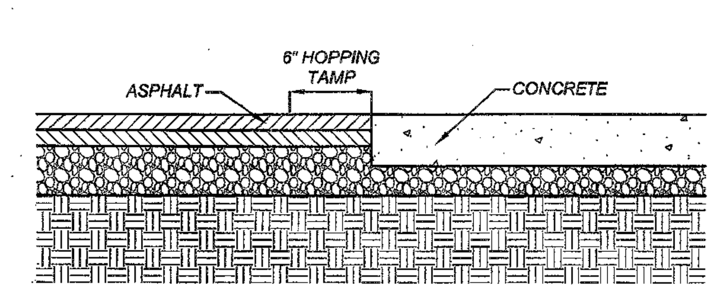

NOTE: CONTRACTOR SHALL USE HOPPING TAMP ADJACENT TO CONCRETE.

ASPHALT/CONCRETE TRANSITION

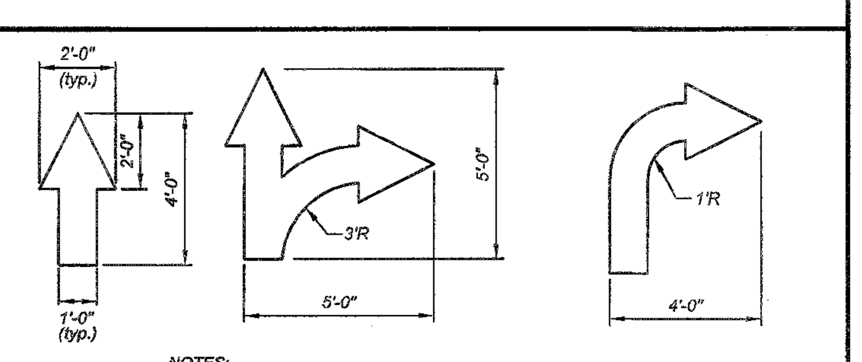

NOTES:
1. WHITE PAINT. MINIMUM FLOW RATE OF 100 SF PER GALLON (PAINT FEDERAL SPECIFICATION: TT-P-1952D).
2. 45" - 52" SPACING.
3. DO NOT REPLACE DRIVE-THRU ARROWS.

DIRECTIONAL ARROWS

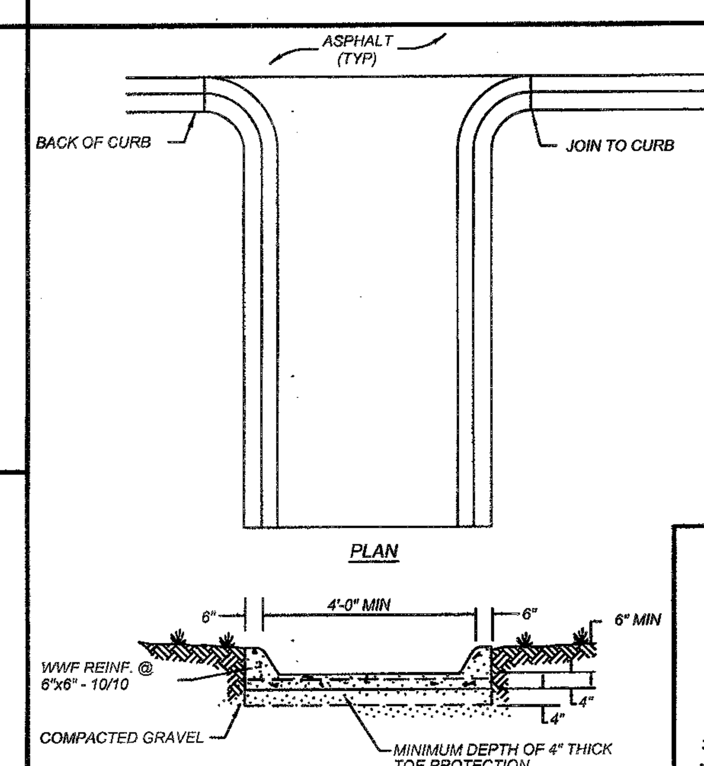

NOTES:
1. DRAINAGE FLUME SHALL EXTEND DOWN TO THE BOTTOM OF THE POND OR SWALE

CONCRETE FLUME

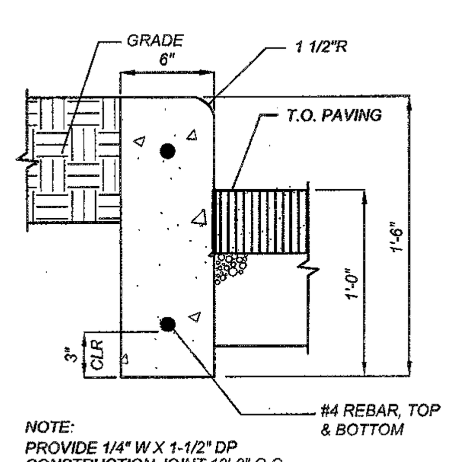

NOTE:
PROVIDE 1/4" W X 1-1/2" DP CONSTRUCTION JOINT 10'-0" O.C. MAX OR 5'-0" O.C. MIN.

HEADER CURB

(N.T.S.)

NOTE:
2.00% MAXIMUM CROSS SLOPE
5.00% MAXIMUM LONGITUDAL SLOPE

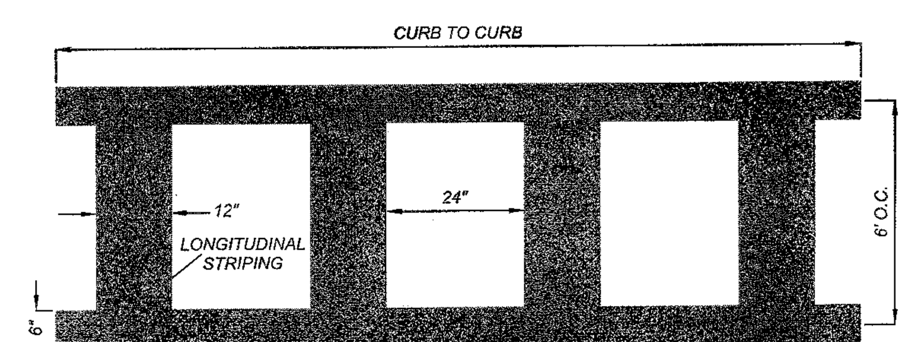

CROSSWALK

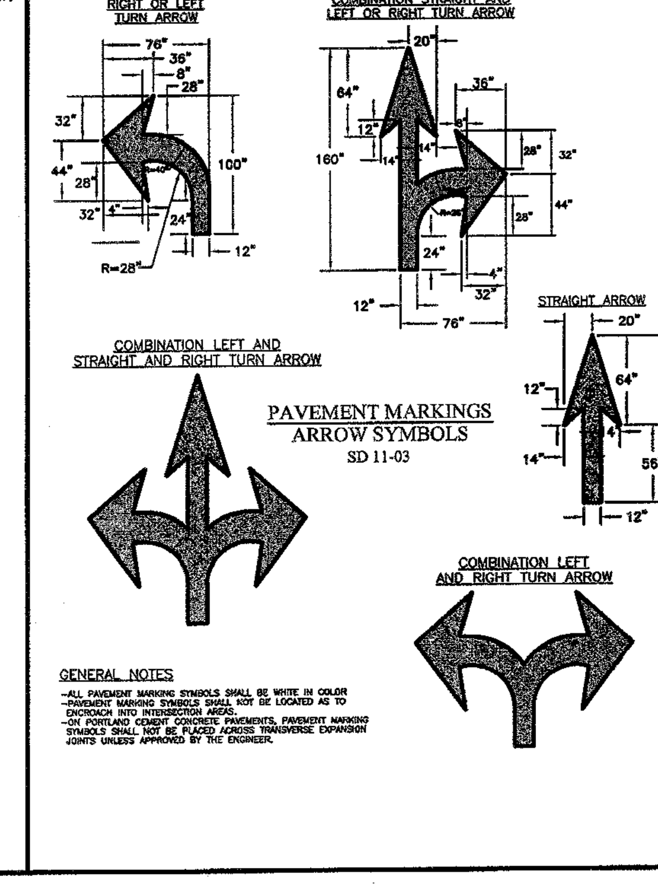

GENERAL NOTES
- ALL PAVEMENT MARKING SYMBOLS SHALL BE WHITE IN COLOR
- PAVEMENT MARKING SYMBOLS SHALL NOT BE LOCATED AS TO ENCROACH INTO INTERSECTION AREAS.
- ON PORTLAND CEMENT CONCRETE PAVEMENTS, PAVEMENT MARKING SYMBOLS SHALL NOT BE PLACED ACROSS TRANSVERSE EXPANSION JOINTS UNLESS APPROVED BY THE ENGINEER.

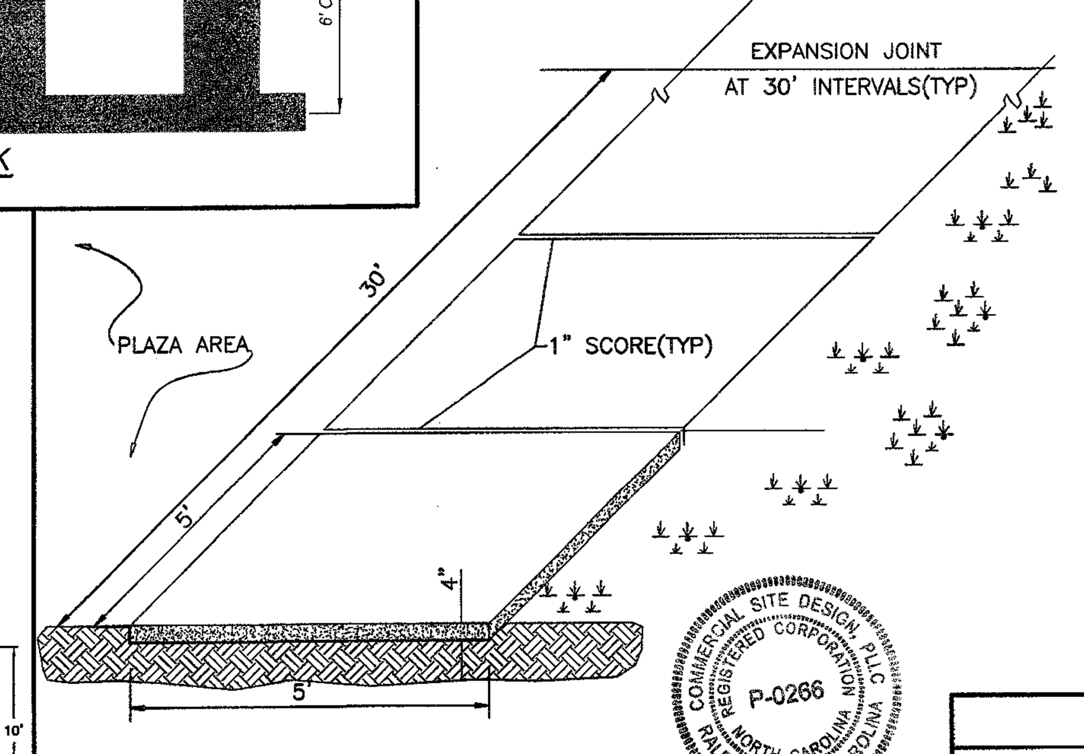

STANDARD SIDEWALK DETAIL

SD 8-15
NOT TO SCALE

COMMERCIAL SITE DESIGN, PLLC REGISTERED CORPORATION P-0266 NORTH CAROLINA RALEIGH, NORTH CAROLINA

NORTH CAROLINA PROFESSIONAL SEAL 24501 ENGINEER

5/15/13

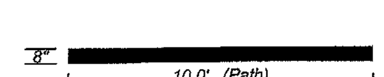

GRILL STALL (TYPICAL)

REV	DATE	DESCRIPTION	BY	ISSUE/REF
1	12-12-12	PERMIT ISSUE	JWR	
2	1-16-13	CITY OF WILMINGTON COMMENTS	STH	
3	03-28-13	CITY OF WILMINGTON COMMENTS #2 & NCDOT	JWR	
4	05-13-13	CITY OF WILMINGTON COMMENTS #3 & NCDOT	JWR	

COMMERCIAL SITE DESIGN
8312 CREEDMOOR ROAD
RALEIGH, NORTH CAROLINA 27613
(919) 848-6121, FAX: (919) 848-3741
WWW.CSITEDESIGN.COM

McDonald's®

THESE PLANS AND SPECIFICATIONS ARE THE PROPERTY OF McDONALD'S CORPORATION AND SHALL NOT BE REPRODUCED WITHOUT THEIR WRITTEN PERMISSION.

OFFICE	RALEIGH REGION
ADDRESS	4601 SIX FORKS ROAD - SUITE 200 - RALEIGH, N.C. 27609

PLAN APPROVAL

	SIGNATURE (2 REQUIRED)	DATE
REGIONAL MGR.		
REGIONAL DEV. DIRECTOR		
REGIONAL CONSTRUCTION MGR.		
REGIONAL REAL ESTATE MGR.		
CO-SIGN SIGNATURES		
AREA CONSTRUCTION MGR.		
CONTRACTOR		

PLAN SCALE: NOT TO SCALE

STREET ADDRESS 2543 CAROLINA BEACH ROAD	
CITY WILMINGTON	STATE NORTH CAROLINA
COUNTY NEW HANOVER	
TAX PARCEL NUMBER R06018-004-023-000	LOCATION CODE NUMBER 32-0062
CSD FILENAME: MCD1216-DT1	

STATUS	DATE	BY
FINAL	-	-
PLAN CHECKED	-	-
AS-BUILT	-	-

C-7
DETAILS

:\MCD - McDonalds\1216 - Wilmington, NC @ Carolina Beach Rd 32-0062\CAD\MCD1216-DT1.dwg, 5/14/2013 10:02:00 AM, janer

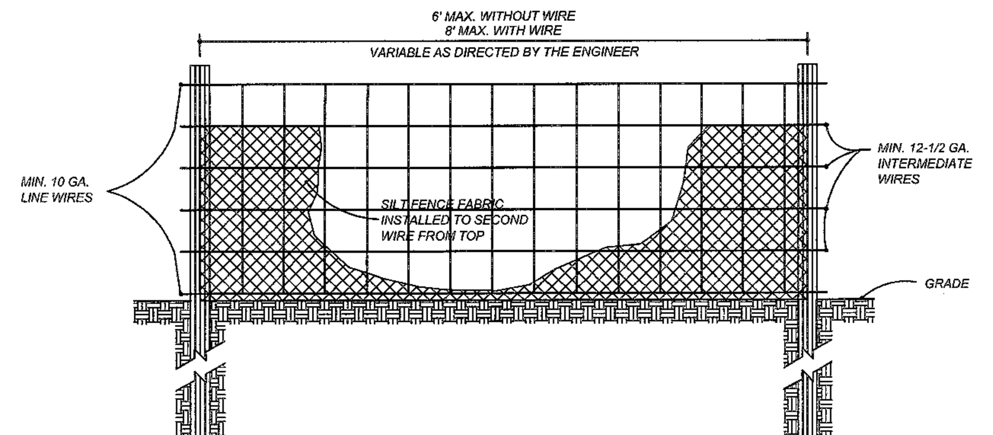

FRONT VIEW

NOTE:
-USE SILT FENCE ONLY WHEN DRAINAGE AREA DOES NOT EXCEED 1/4 ACRE AND NEVER IN AREAS OF CONCENTRATED FLOW

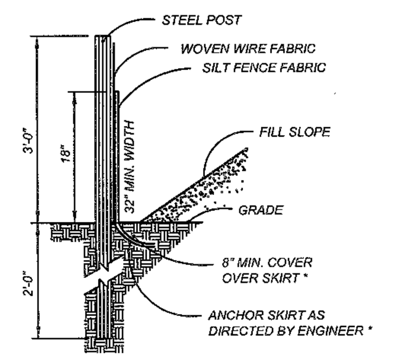

* FOR REPAIR OF SILT FENCE FAILURES, USE No. 57 WASHED STONE. FOR ANCHOR WHEN SILT FENCE IS PROTECTING CATCH BASIN.

SIDE VIEW

MAINTENANCE:

INSPECT SEDIMENT FENCES AT LEAST ONCE A WEEK AND AFTER EACH RAINFALL. MAKE ANY REQUIRED REPAIRS IMMEDIATELY. SHOULD THE FABRIC OF A SEDIMENT FENCE COLLAPSE, TEAR, DECOMPOSE, OR BECOME INEFFECTIVE, REPLACE IT IMMEDIATELY. REMOVE SEDIMENT DEPOSITS AS NECESSARY TO PROVIDE ADEQUATE STORAGE VOLUME FOR THE NEXT RAIN AND TO REDUCE PRESSURE ON THE FENCE. TAKE CARE TO AVOID UNDERMINING THE FENCE DURING CLEANOUT. REMOVE ALL FENCING MATERIALS AND UNSTABLE SEDIMENT DEPOSITS AND BRING THE AREA TO GRADE AND STABILIZE IT AFTER THE CONTRIBUTING DRAINAGE AREA HAS BEEN PROPERLY STABILIZED.

STANDARD TEMPORARY SILT FENCE

NOTES:

1. PUT SILT FENCE OR TREE PROTECTION FENCE UP TO ENSURE CONSTRUCTION ENTRANCE IS USED.
2. IF CONSTRUCTION ON THE SITES ARE SUCH THAT THE MUD IS NOT REMOVED BY THE VEHICLE TRAVELING OVER THE STONE, THEN THE TIRES OF THE VEHICLES MUST BE WASHED BEFORE ENTERING THE PUBLIC ROAD.

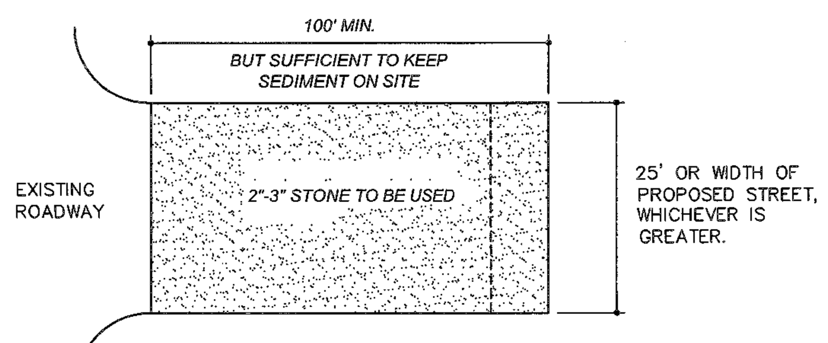

PLAN

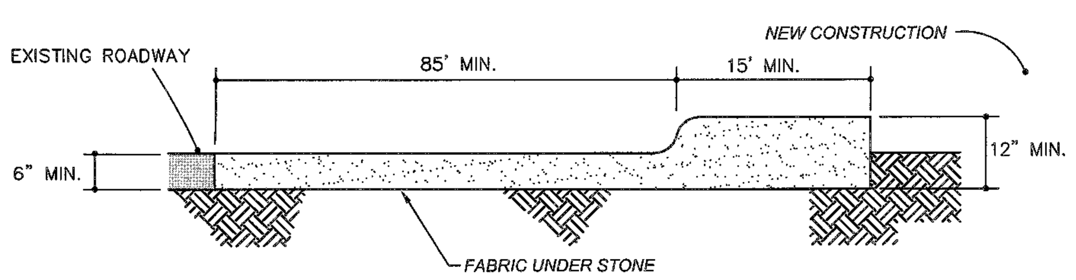

CROSS SECTION

MAINTENANCE

INSPECT CONSTRUCTION ROADS AND PARKING AREAS PERIODICALLY FOR CONDITION OF SURFACE. TOP DRESS WITH NEW GRAVEL AS NEEDED. CHECK ROAD DITCHES AND OTHER SEEDED AREAS FOR EROSION AND SEDIMENTATION AFTER RUNOFF-PRODUCING RAINS. MAINTAIN ALL VEGETATION IN A HEALTHY, VIGOROUS CONDITION. SEDIMENT PRODUCING AREAS SHOULD BE TREATED IMMEDIATELY.

CONSTRUCTION ENTRANCE

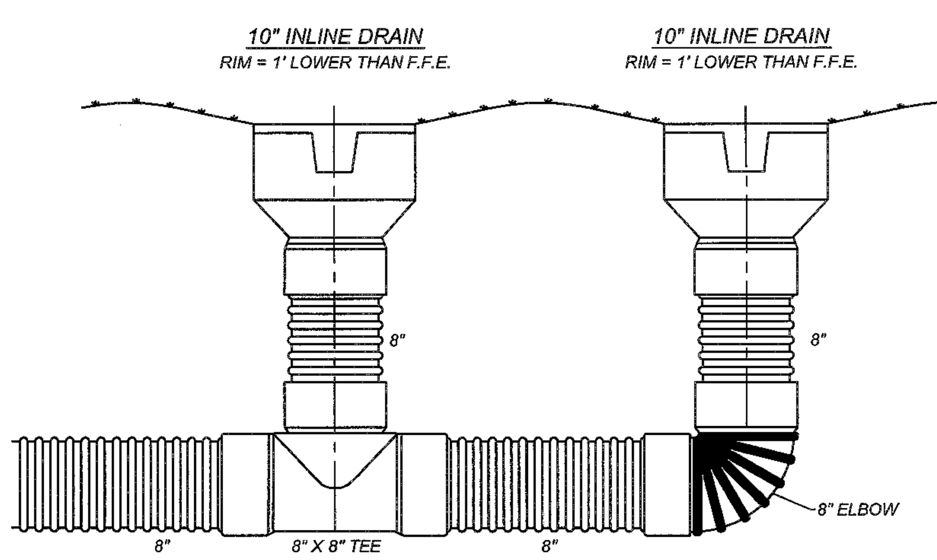

THIS PRINT DISCLOSES SUBJECT MATTER IN WHICH NYLOPLAST HAS PROPRIETARY RIGHTS. THE RECEIPT OR POSSESSION OF THIS PRINT DOES NOT CONFER, TRANSFER, OR LICENSE THE USE OF THE DESIGN OR TECHNICAL INFORMATION SHOWN HEREIN REPRODUCTION OF THIS PRINT OR ANY INFORMATION CONTAINED HEREIN, OR MANUFACTURE OF ANY ARTICLE HEREFROM, FOR THE DISCLOSURE TO OTHERS IS FORBIDDEN, EXCEPT BY SPECIFIC WRITTEN PERMISSION FROM NYLOPLAST.

Nyloplast
3130 VERONA AVE
BUFORD, GA 30518
PHN (770) 932-2443
FAX (770) 932-2490
www.nyloplast-us.com

INLINE DRAIN

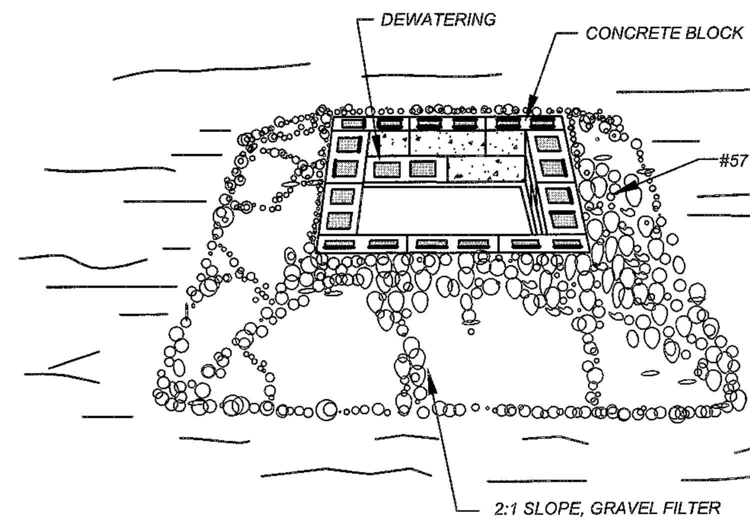

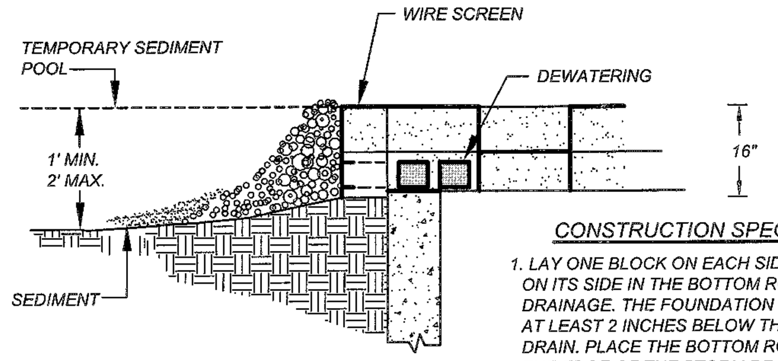

CONSTRUCTION SPECIFICATIONS

1. LAY ONE BLOCK ON EACH SIDE OF THE STRUCTURE ON ITS SIDE IN THE BOTTOM ROW TO ALLOW POOL DRAINAGE. THE FOUNDATION SHOULD BE EXCAVATED AT LEAST 2 INCHES BELOW THE CREST OF THE STORM DRAIN. PLACE THE BOTTOM ROW OF BLOCKS AGAINST THE EDGE OF THE STORM DRAIN FOR LATERAL SUPPORT AND TO AVOID WASHOUTS WHEN OVERFLOW OCCURS. IF NEEDED, GIVE LATERAL SUPPORT TO SUBSEQUENT ROWS BY PLACING 2 X 4 WOOD STUDS THROUGH BLOCK OPENINGS.
2. CAREFULLY FIT HARDWARE CLOTH OR COMPARABLE WIRE MESH WITH 1/2-INCH OPENINGS OVER ALL BLOCK OPENINGS TO HOLD GRAVEL IN PLACE.
3. USE CLEAN GRAVEL, 3/4- TO 1/2-INCH IN DIAMETER, PLACED 2 INCHES BELOW THE TOP OF THE BLOCK ON A 2:1 SLOPE OR FLATTER AND SMOOTH IT TO AN EVEN GRADE. DOT #57 WASHED STONE IS RECOMMENDED.

MAINTENANCE:

INSPECT THE BARRIER OF AFTER EACH RAIN AND MAKE REPAIRS AS NEEDED. REMOVE SEDIMENT AS NECESSARY TO PROVIDE ADEQUATE STORAGE VOLUME FOR SUBSEQUENT RAINS. WHEN THE CONTRIBUTING DRAINAGE AREA HAS BEEN ADEQUATELY STABILIZED, REMOVE ALL MATERIALS AND ANY UNSTABLE SOIL, AND EITHER SALVAGE OR DISPOSE OF IT PROPERLY. BRING THE DISTURBED AREA TO PROPER GRADE, THEN SMOOTH AND COMPACT IT. APPROPRIATELY STABILIZE ALL BARE AREAS AROUND THE INLET.

BLOCK AND GRAVEL DROP INLET PROTECTION

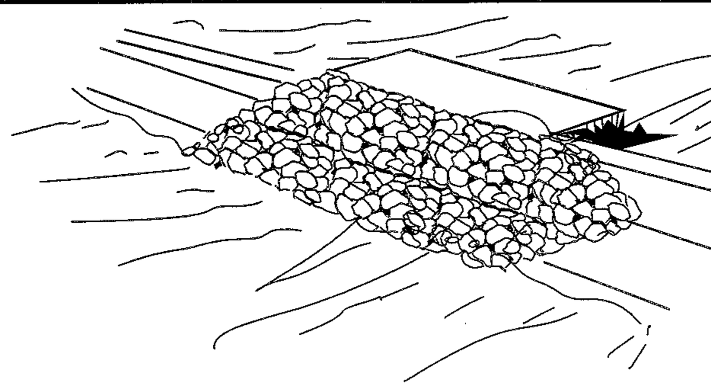

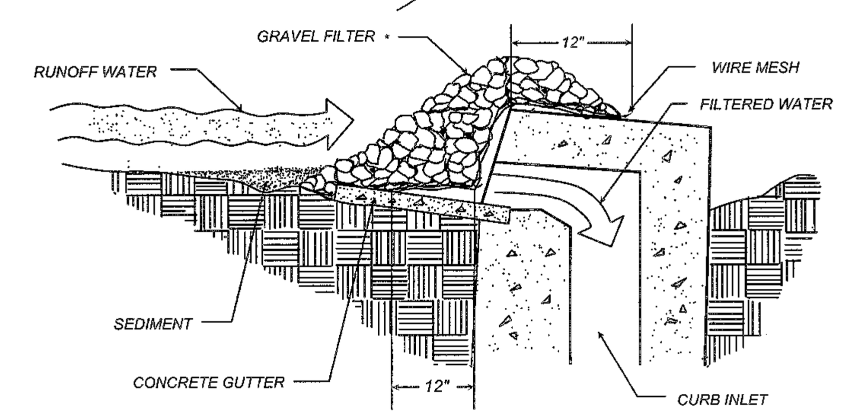

SPECIFIC APPLICATION

THIS METHOD OF INLET PROTECTION IS APPLICABLE AT CURB INLETS WHERE PONDING IN FRONT OF THE STRUCTURE IS NOT LIKELY TO CAUSE INCONVENIENCE OR DAMAGE TO ADJACENT STRUCTURES AND UNPROTECTED AREAS.

* GRAVEL SHALL BE #57 WASHED STONE

MAINTENANCE:

1. THE STRUCTURE SHALL BE INSPECTED AFTER EACH RAINFALL AND REPAIRS MADE AS NEEDED.
2. SEDIMENT SHALL BE REMOVED AND THE TRAP RESTORED TO ITS ORIGINAL DIMENSIONS WHEN THE SEDIMENT HAS ACCUMULATED TO ONE-HALF THE DESIGN DEPTH OF THE TRAP. REMOVED SEDIMENT SHALL BE DEPOSITED IN A SUITABLE AREA AND IN SUCH A MANNER THAT IT WILL NOT ERODE.
3. STRUCTURE SHALL BE REMOVED AND THE AREA STABILIZED WHEN THE REMAINING DRAINAGE AREA HAS BEEN PROPERLY STABILIZED.

INTERMEDIATE BLOCK & GRAVEL DROP INLET PROTECTION

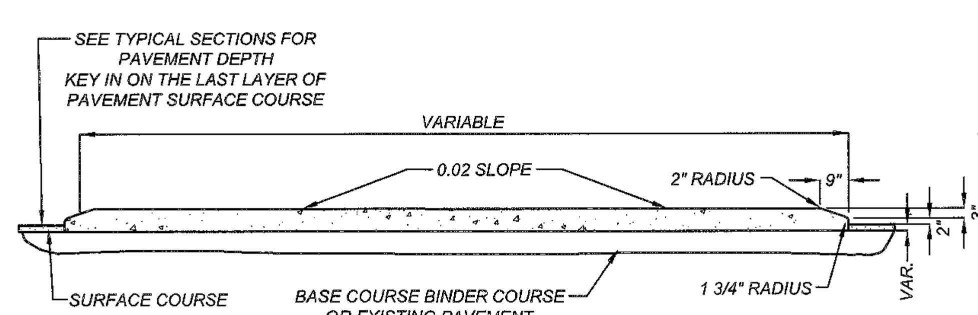

5' MONOLITHIC CONCRETE ISLAND (KEYED IN) ON ASPHALT CONCRETE PAVEMENT

FOCALPOINT HP PERFORMANCE SPECIFICATION:

HIGH PERFORMANCE MEDIA

HIGH PERFORMANCE MEDIA MUST MEET A MINIMUM OF 100" PER HOUR INFILTRATION RATE.
FIELD HYDRAULIC CONDUCTIVITY TESTING MUST BE CONDUCTED WITHIN 30 DAYS OF INSTALLATION.
FIELD TEST MUST BE CONDUCTED WITH PROSCRIBED INFILTROMETER AND SOP (SEE SPECIFICATION).
FAILURE TO MEET FIELD TESTING WILL RESULT IN THE REMOVAL OF MEDIA AND REPLACEMENT FROM ALTERNATE BATCH.

HIGH PERFORMANCE STRUCTURAL UNDERDRAIN

MUST HAVE A MINIMUM OF 19 SQUARE INCHES OF ORIFICE OPENING PER SQUARE FOOT.
MUST MEET H20 LOADING REQUIREMENTS.
MUST BE MODULAR IN NATURE AND ASSEMBLED ON SITE.
MUST HAVE MINIMUM 90% INTERIOR VOID SPACE.

FOCALPOINT HP CONSTRUCTION GUIDE		
A	FOCALPOINT LENGTH	7.25'
B	# UNDERDRAIN LONG	4
C	FOCALPOINT WIDTH	9.04'
D	# UNDERDRAIN WIDE	3
E	WATER QUALITY VOLUME	2100 CF
F	OVERFLOW ELEVATION	40.90'
G	OUTLET FLOWLINE	35.30'
H	TOP OF MEDIA	38.09'
I	TOP OF GABION (OPTIONAL)	38.84'

PLAN VIEW- WITH GABION WALL AROUND SYSTEM

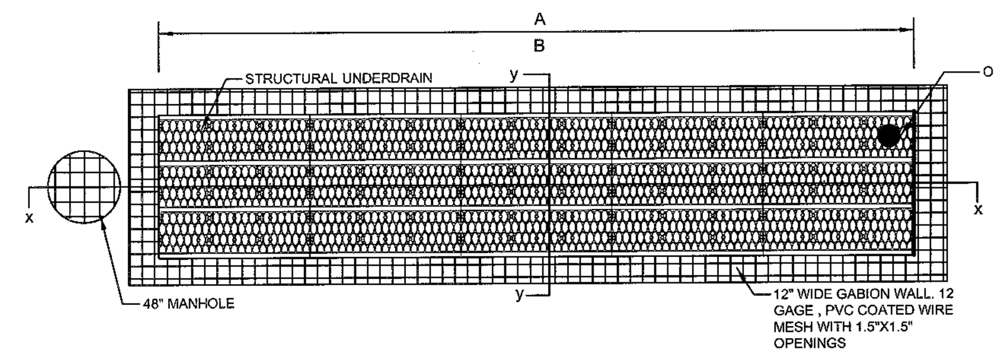

SECTION Y-Y

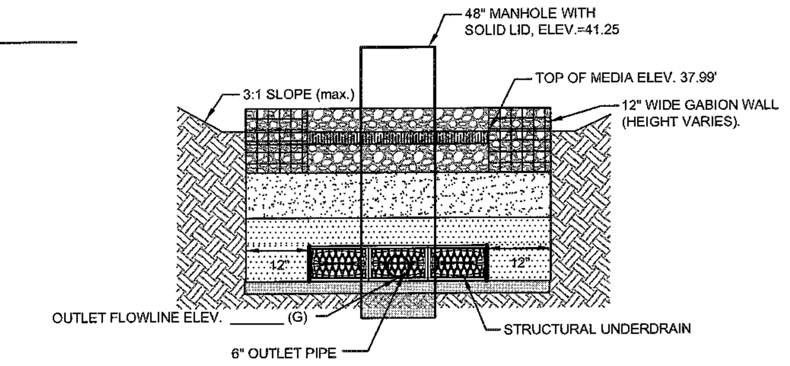

FOCALPOINT CONSTRUCTION GUIDE

TO FIND A VALUE ADDED RESELLER IN YOUR AREA VISIT
WWW.CONVERGENTWATER.COM/STORMWATER-PRODUCTS OR CONTACT
CONVERGENT WATER TECHNOLOGIES AT 800.771.5428

DWG No. 02-1

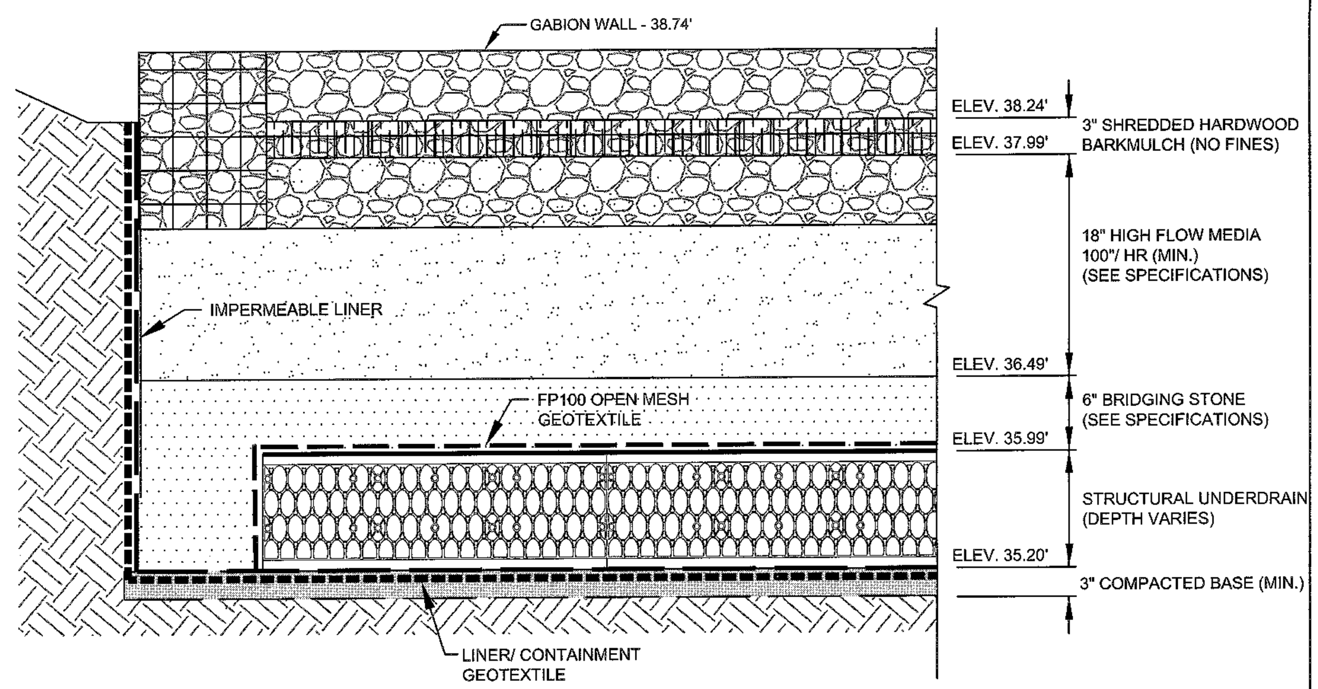

FOCALPOINT DETAILED CROSS SECTION

TO FIND A VALUE ADDED RESELLER IN YOUR AREA VISIT
WWW.CONVERGENTWATER.COM/STORMWATER-PRODUCTS OR CONTACT
CONVERGENT WATER TECHNOLOGIES AT 800.771.5428

DWG No. 02-2

SECTION X-X

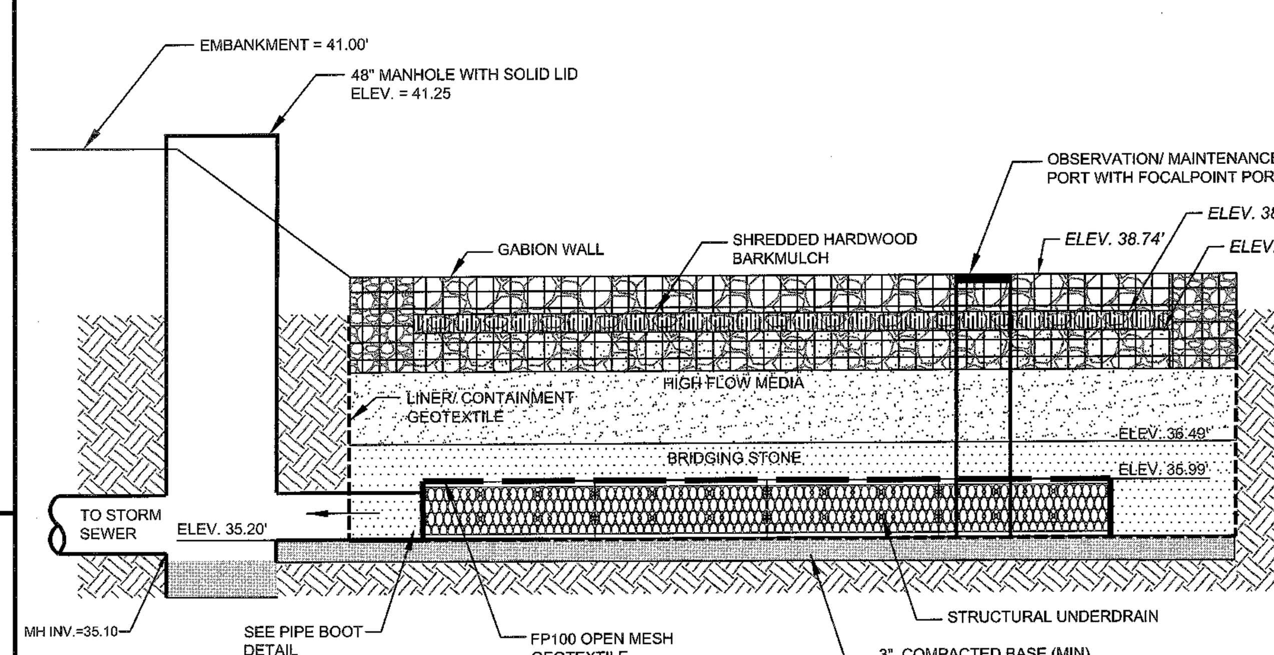

FOCALPOINT SECTION X-X

TO FIND A VALUE ADDED RESELLER IN YOUR AREA VISIT
WWW.CONVERGENTWATER.COM/STORMWATER-PRODUCTS OR CONTACT
CONVERGENT WATER TECHNOLOGIES AT 800.771.5428

DWG No. 02-3

PERMANENT SEEDING IN NORTH CAROLINA (TABLE 6.11L)

SEEDING MIXTURE

SPECIES [1]	RATE (lb/acre)
TALL FESCUE	80
SERICEA LESPEDEZA	20
KOBE LESPEDEZA	10
	50

SEEDING NOTES

1.) AFTER AUGUST 15 USE UNSCARIFIED SERICEA SEED.
2.) WHERE PERIODIC MOWING IS PLANNED OR A NEAT APPEARANCE IS DESIRED, OMIT SERICEA AND INCREASE KOBE LESPEDEZA TO 40 LB/ACRE.
3.) TO EXTEND SPRING SEEDING DATES INTO JUNE, ADD 15 LB/ACRE HULLED BERMUDAGRASS. HOWEVER, AFTER MID-APRIL IT IS PREFERABLE TO SEED TEMPORARY COVER.

NURSE PLANTS

BETWEEN MAY 1 AND AUGUST 15, ADD 10 LB/ACRE GERMAN MILLET OR 15 LB/ACRE SUDANGRASS. PRIOR TO MAY 1 OR AFTER AUGUST 15 ADD 40 LB/ACRE RYE (GRAIN).

SEEDING DATES

	BEST	POSSIBLE
FALL:	AUGUST 25 - SEPTEMBER 15	AUGUST 20 - OCTOBER 25
LATE WINTER:	FEBRUARY 15 - MARCH 21	FEBRUARY 1 - APRIL 15

FALL IS BEST FOR TALL FESCUE AND LATE WINTER FOR LESPEZEDAS. OVER SEEDING OF KOBE LESPEDEZA OVER FALL-SEEDED TALL FESCUE IS VERY EFFECTIVE.

SOIL AMENDMENTS

APPLY LIME AND FERTILIZER ACCORDING TO SOIL TESTS, OR APPLY 4,000 LB/ACRE GROUND AGRICULTURAL LIMESTONE AND 1,000 LB/ACRE 10-10-10 FERTILIZER.

MULCH

APPLY 4,000 LB/ACRE GRAIN STRAW OR EQUIVALENT COVER OF ANOTHER SUITABLE MULCH. ANCHOR STRAW BY TACKING WITH ASPHALT, NETTING, OR ROVING OR BY CRIMPING WITH A MULCH ANCHORING TOOL. A DISK WITH BLADES SET NEARLY STRAIGHT CAN BE USED AS A MULCH ANCHORING TOOL.

MAINTENANCE

REFERTILIZE IN THE SECOND YEAR UNLESS GROWTH IS FULLY ADEQUATE. MAY BE MOWED ONCE OR TWICE A YEAR, BUT MOWING IS NOT NECESSARY, RESEED, FERTILIZE, AND MULCH DAMAGED AREAS IMMEDIATELY.

[1] REFER TO APPENDIX 8.02 FOR BOTANICAL NAMES.

COMMERCIAL SITE DESIGN, PLLC REGISTERED CORPORATION P-0266 RALEIGH, NORTH CAROLINA

NORTH CAROLINA PROFESSIONAL SEAL 24501

7/16/13

PLAN SCALE: NOT TO SCALE	
STREET ADDRESS 2543 CAROLINA BEACH ROAD	
CITY WILMINGTON	STATE NORTH CAROLINA
COUNTY NEW HANOVER	
TAX PARCEL NUMBER R06018-004-023-000	LOCATION CODE NUMBER 32-0062
CSD FILENAME: MCD1216-DT2	

REV	DATE	DESCRIPTION	BY	ISSUE/REF
1	12-12-12	PERMIT ISSUE	JWR	
2	1-16-13	CITY OF WILMINGTON COMMENTS	STH	
3	03-28-13	CITY OF WILMINGTON COMMENTS #2 & NCDOT	JWR	
4	05-13-13	CITY OF WILMINGTON COMMENTS #3 & NCDOT	JWR	
5	06-24-13	CITY OF WILMINGTON COMMENTS #4 & NCDOT	JWR	

COMMERCIAL SITE DESIGN
8312 CREEDMOOR ROAD
RALEIGH, NORTH CAROLINA 27613
(919) 848-6121, FAX: (919) 848-3741
WWW.CSITEDESIGN.COM

McDonald's®

THESE PLANS AND SPECIFICATIONS ARE THE PROPERTY OF McDONALD'S CORPORATION AND SHALL NOT BE REPRODUCED WITHOUT THEIR WRITTEN PERMISSION.

OFFICE	RALEIGH REGION
ADDRESS	4601 SIX FORKS ROAD - SUITE 200 - RALEIGH, N.C. 27609

PLAN APPROVAL

SIGNATURE (2 REQUIRED)	DATE
REGIONAL MGR.	
REGIONAL DEV. DIRECTOR	
REGIONAL CONSTRUCTION MGR.	
REGIONAL REAL ESTATE MGR.	
CO-SIGN SIGNATURES	
AREA CONSTRUCTION MGR.	
CONTRACTOR	

STATUS	DATE	BY
FINAL	-	-
PLAN CHECKED	-	-
AS-BUILT	-	-

C-8
DETAILS

X:\MCD - McDonalds\1216 - Wilmington, NC @ Carolina Beach Rd 32-0062\CAD\MCD1216-DT2.dwg, 7/16/2013 10:23:04 AM, frankiew

NOTES:
1. FOR GRAVITY APPLICATIONS ONLY.
2. ALL PROCEPTOR UNITS ARE MANUFACTURED WITH FIBERGLASS REINFORCED PLASTICS. PHYSICAL CHARACTERISTICS AND THICKNESS: POLYESTER RESIN AND E GLASS MINIMUM THICKNESS 1/4" WALL AND 3/8" TOP AND BOTTOM BOWLS.
3. ALL PROCEPTOR UNITS ARE TO BE INSTALLED IN ACCORDANCE WITH THE MANUFACTURERS INSTALLATION INSTRUCTION.
4. STANDARD PIPING IS SCH. 40 PVC.
5. GMC/OMC 500 - 3000 UNITS COME STANDARD WITH 4" INLET AND OUTLET (OTHER PIPE SIZE OPTIONS AVAILABLE ON REQUEST).
6. EXTENSION COLLAR TO BE ORDERED TO MEET FINISHED GRADE, CUT ON SITE FOR FINAL ADJUSTMENT AND CAULKED WITH SIKAFLEX BY CONTRACTOR FOR WATERTIGHT SEAL.
7. COVERS AVAILABLE FOR H20 TRAFFIC LOADING, PEDESTRIAN LOADING OR ABOVE GROUND INSTALLATION.
8. CONSULT GREEN TURTLE FOR OTHER SIZES.
9. 30 YEAR WARRANTY AGAINST LEAKS, AND STRUCTURAL FAILURE.
10. U.S. PATENT #5,746,912; CDN PATENT #2,195,822

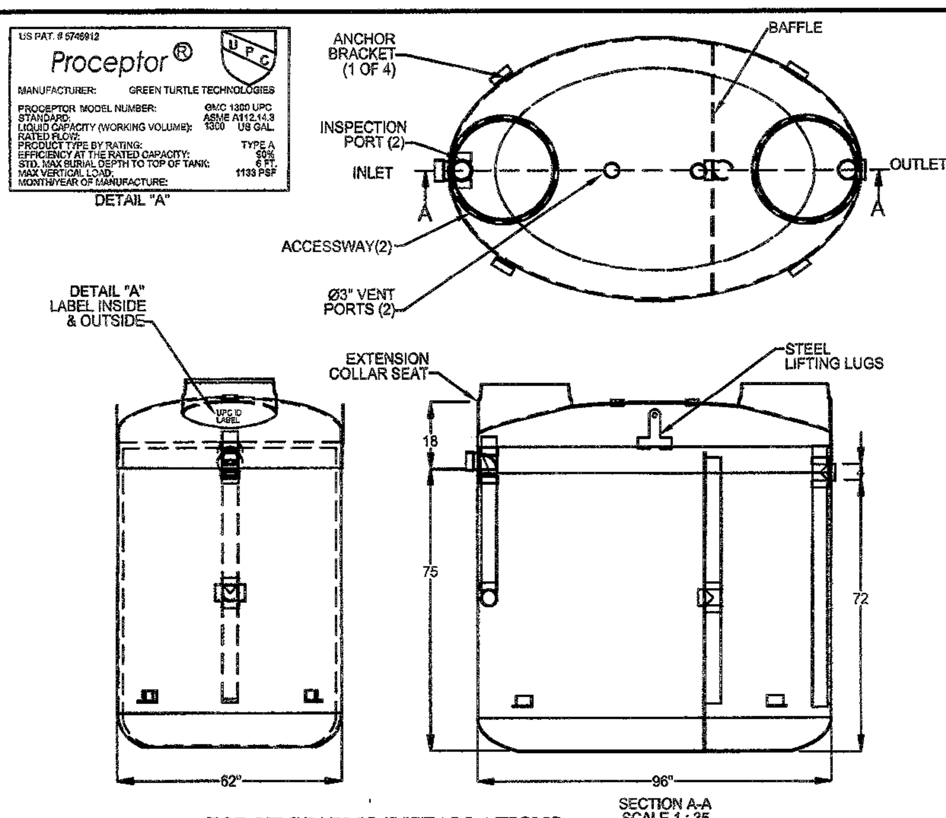

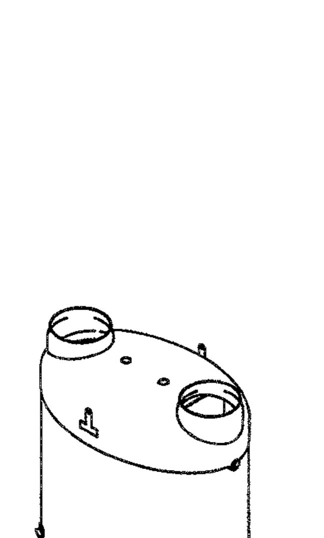

FOR UPC/IAPMO INSTALLATIONS

TITLE: GMC 1300 UPC 4" 24"	PROCEPTOR GALLON INTERCEPTOR INLET & OUTLET ACCESSWAY	REV	DATE	DRAWN
PROJECT:	WO:	1	6/15/04	F. CHANDLER
		2	9/20/05	L. SIMKINS
OPTIONS:		3	JANUARY 2, 2007	L. SIMKINS
GREASE SENSOR ALARM		4	MAY 14, 2008	L. SIMKINS
SUCTION PIPE FOR INDOOR INSTALLATION		5	NOVEMBER 16, 2009	L. SIMKINS
ABOVE GROUND INSTALLATION		6	APRIL 3, 2012	L. SIMKINS
		DRAWN BY: F CHANDLER		
		DATE DRAWN: 6/15/04		

Proceptor® by greenturtle®
US 877 428 8187 CAN 877 966 9444
www.greenturtletech.com
SIZE A DWG. NO. GMC 1300 UPC REV. 6
SCALE 1:20 DO NOT SCALE DRAWING SHEET 1 OF 1

FOR UPC/IAPMO INSTALLATIONS
APPROVED UNDER IAPMO / ANSI Z1001-200
MEETS ASTM C-581

GMC 500 - 1500 UPC FOR UPC/IAPMO INSTALLATIONS
GMC 750, 1000, 1250 FL FOR FLORIDA INSTALLATIONS
INSTALLATION PROCEDURE

NOTES:
1. REFER TO INSTALLATION PROCEDURE AND INSTALLATION CHECKLIST.
2. PROCEPTOR SEPARATORS MUST BE INSTALLED IN ACCORDANCE WITH ALL RELEVANT FEDERAL, PROVINCIAL/STATE, AND LOCAL CODES INCLUDING LOCAL PLUMBING CODE.
3. US PATENT # 5,746,912; CDN PATENT # 2,195,822

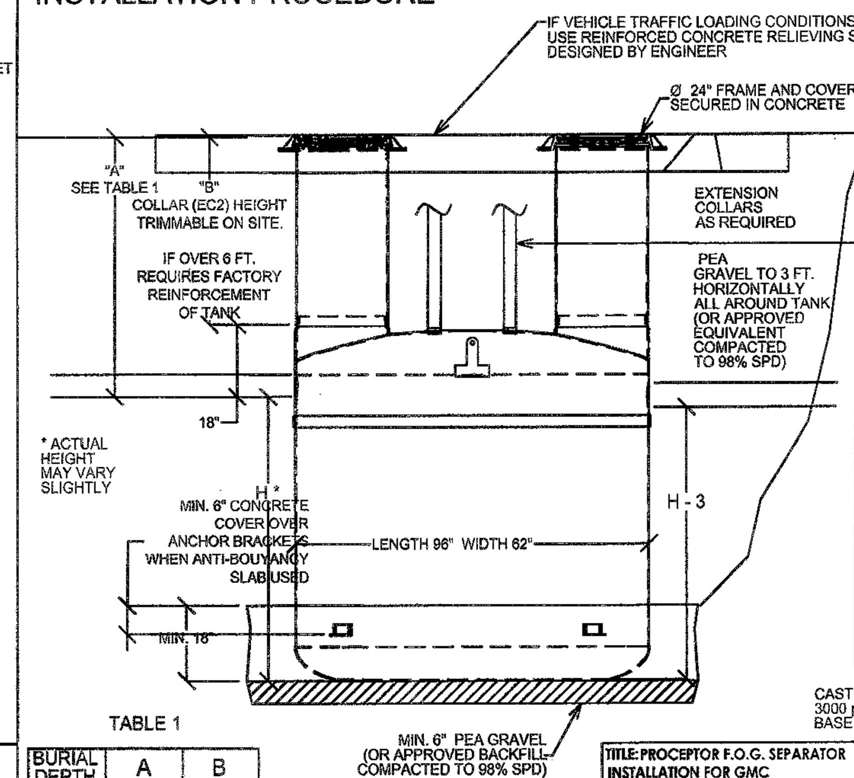

TABLE 1

BURIAL DEPTH	A	B
Max.	7' 6"	6 ft.
Min. with Traffic	54"	36"
Min. no Traffic	** 30"	** 12"

** ESTIMATED SPACE REQUIRED TO FIT VENT ELBOWS UNDER FLOOR

TABLE 2

PROCEPTOR F.O.G. SEPARATOR MODEL	INLET INVERT TO TANK BOTTOM (H*)	WEIGHT OF BUOYANCY SLAB (LBS)	DRY WEIGHT OF TANK
GMC 500 UPC	33"	6989	565 lbs
GMC 750 UPC	46"	8976	645 lbs
GMC 1000 UPC	60"	11116	720 lbs
GMC 1300 UPC	75"	13417	815 lbs
GMC 1500 UPC	86"	15106	875 lbs
GMC 750 FL	46"	8976	645 lbs
GMC 1000 FL	60"	11116	720 lbs
GMC 1250 FL	75"	13417	815 lbs

CAST IN PLACE ANTI-BUOYANCY SLAB FOR HIGH WATER TABLE CONDITIONS 3000 psi CONCRETE READY MIX POUR AROUND BASE OF UNIT TO WEIGHT OF ANTI-BUOYANCY SLAB (SEE TABLE 2)

TITLE: PROCEPTOR F.O.G. SEPARATOR INSTALLATION FOR GMC 500, 750, 1000, 1300, 1500 UPC 750, 1000, 1250 FL	REV	DATE	DRAWN
PROJECT: WO:	11	SEPTEMBER 7, 2010	L. SIMKINS
	12	AUGUST 12, 2011	L. SIMKINS
OPTIONS:	3	JUNE 1, 2005	L. SIMKINS
	4	SEPT. 20, 2005	L. SIMKINS
	5	MARCH 16, 2006	L. SIMKINS
	6	FEBRUARY 5, 2007	L. SIMKINS
	7	SEPTEMBER 13, 2007	L. SIMKINS
	8	APRIL 16, 2008	L. SIMKINS
	9	NOVEMBER 17, 2009	L. SIMKINS
	10	JUNE 3, 2010	L. SIMKINS
	DRAWN BY: F CHANDLER		
	DRAWN DATE 6/18/04		

Proceptor® by greenturtle®
US 877 428 8187 CAN 877 966 9444
www.greenturtletech.com
SIZE A DWG. NO. INSTALL GMC 500-1500 UPC FL REV. 12
SCALE 1:45 DO NOT SCALE DRAWING SHEET 1 OF 1

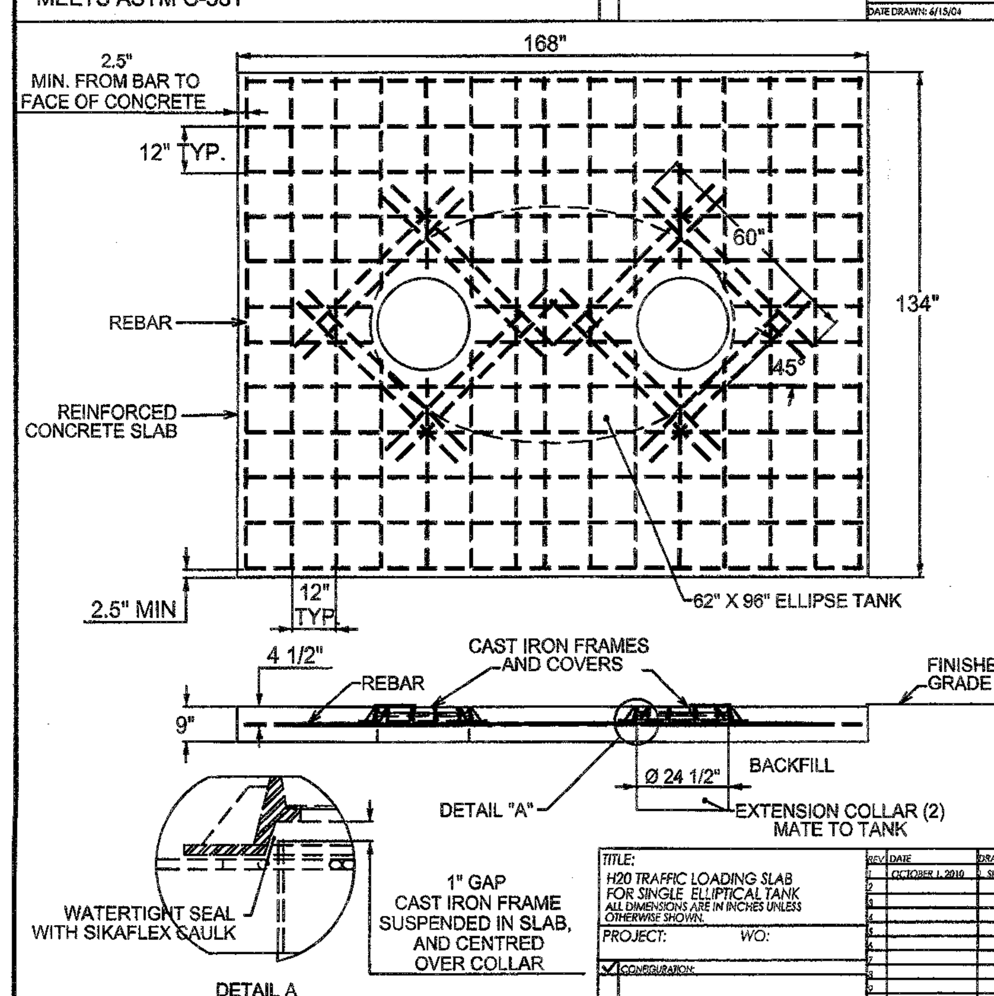

NOTES:
- CONCRETE TO BE 28 DAY COMPRESSIVE STRENGTH TO 4000 PSI.
- NO. 4 REBAR (Ø 1/2") GRADE 60 STEEL PER ASTM A615; CONNECTED WITH TIE WIRE
- REBAR SPACING, 4" AROUND ACCESS OPENINGS.
- ALL PENETRATIONS TO BE SLEEVED OR HAVE SLIP CONNECTIONS.
- MINIMUM 36" FROM TOP OF SLAB TO TOP OF TANK.
- EXTEND COMPACTED BACKFILL A MINIMUM 3 FT. BEYOND ALL SIDES OF TANK.

TANK MODELS
GMC 500 UPC
GMC 750 UPC & FL
GMC 1000(1) UPC & FL
GMC 1250 FL
GMC 1300 UPC
GMC 1500 (1) UPC

TITLE: H20 TRAFFIC LOADING SLAB FOR SINGLE ELLIPTICAL TANK ALL DIMENSIONS ARE IN INCHES UNLESS OTHERWISE SHOWN.	REV	DATE	DRAWN
PROJECT: WO:	1	OCTOBER 1, 2010	L. SIMKINS
CONFIGURATION:			
	DRAWN BY: L SIMKINS		
	DRAWN DATE: OCTOBER 1, 2008		

greenturtle®
877 428 8187 US 877 966 9444 CAN
www.greenturtletech.com
SIZE A DWG. NO. SINGLE SLAB DUAL ACCESS REV. 1
SCALE 1:35 DO NOT SCALE DRAWING SHEET 1 OF 1

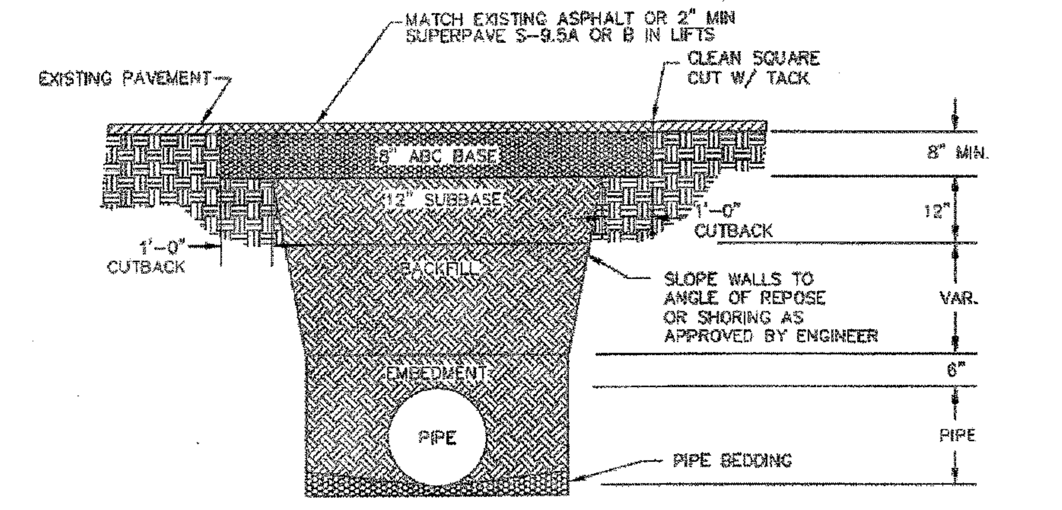

NOTES:
1. BACKFILL SHALL BE SUITABLE MATERIAL THAT IS FREE FROM HEAVY CLAY, GUMBOS, DEBRIS, ORGANICS AND LITTLE TO NO EXCESSIVE MOISTURE.
2. SELECT BACKFILL MAY BE SUBSTITUTED OR REQUIRED BY CITY TO ACHIEVE COMPACTION, (I.E. #57, ABC, CRUSHED LIMESTONE, CLEAN SAND, FLOWABLE FILL, ETC).
3. 8-INCH OF ABC BASE MATERIAL SHALL BE USED ON CITY STREETS.
4. BACKFILL AND BASE MATERIALS SHALL BE COMPACTED 12" MINIMUM LIFTS
5. SOIL SHALL BE COMPACTED BY A MECHANIZED TAMPER (I.E JUMPING JACK), HOWEVER, VIBRATORY ROLLERS > 18" WIDTH MAY BE USED FOR LARGER EXCAVATIONS. THE PLATE TAMP METHOD SHALL NOT BE USED.
6. ALL APPROVED CASTINGS SHALL BE SET FLUSH TO GRADE AND SUPPORTED IF APPLICABLE.
7. ABC BASE AND SUBBASE COMPACTED TO 98% AND BACKFILL AND EMBEDMENT COMPACTED TO 90% AS DETERMINED BY THE MODIFIED PROCTOR AASHTO METHOD T-99.
8. 1-FOOT CUTBACKS OF ASPHALT SHALL BE PREPARED ON UNDISTURBED SOIL. MINIMUM ASPHALT DENSITY IS 90%.

PAVEMENT REPAIR WHERE PIPE INSTALLED

(FOR PRIVATE ROADS AND PAVED AREAS;
CONTRACTOR TO MEET MIN. REQUIREMENTS AS DEFINED BY
RIGHT-OF-WAY OWNER FOR PUBLIC ROAD REPAIRS)

NOT TO SCALE

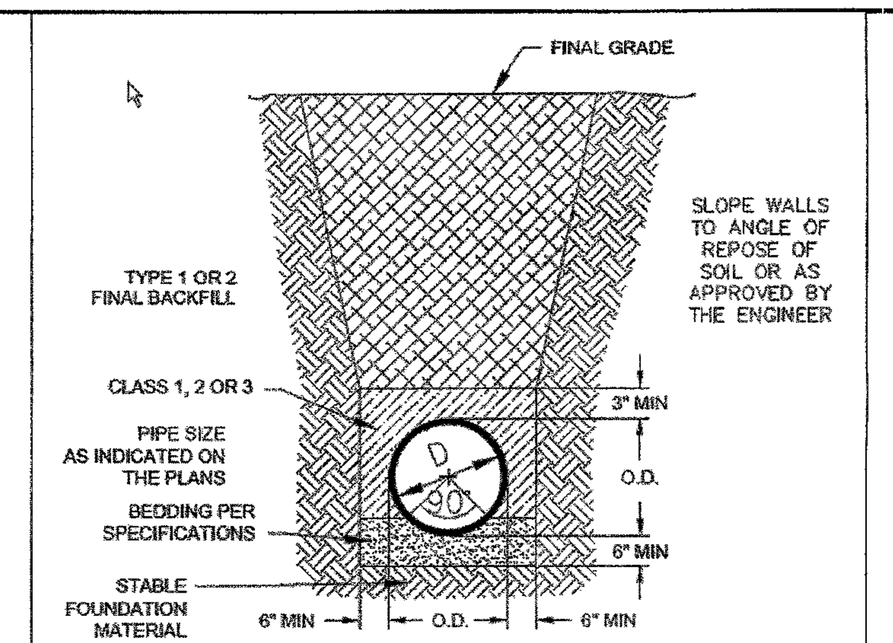

CL 50 DUCTILE IRON
DR 18 PVC
PIPE TRENCH DETAIL

NOT TO SCALE

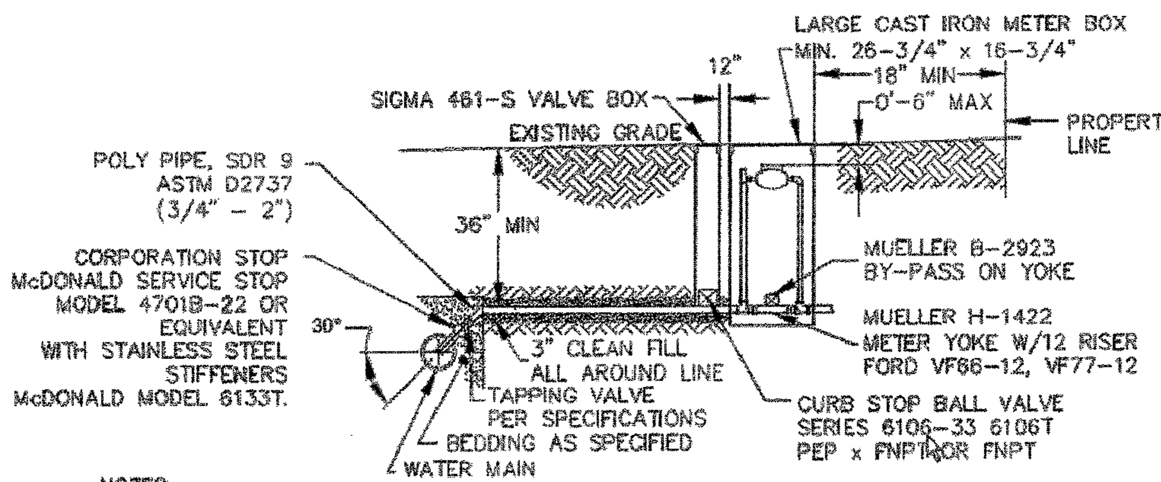

NOTES:
1. NO JOINT SHALL BE INSTALLED BETWEEN THE MAIN SERVICE TAP AND THE METER STOP. ALL SERVICES SHALL BE INSTALLED PERPENDICULAR TO MAIN.
2. SERVICE SADDLES ON PVC MAINS SHALL BE WIDE BAND BRASS BODY: SADDLE McDONALD 3801 OR EQUIVALENT
3. METER BOXES SUSCEPTIBLE TO TRAFFIC SHALL CONFORM TO ASTM A48, CLASS 30B AND AASHTO H20 LOAD RATING STANDARDS (SIP MODEL 4240 OR APPROVED EQUIVALENT)

LARGE METER BOX

FOR 1 1/2" OR 2" WATER SERVICES

NOT TO SCALE

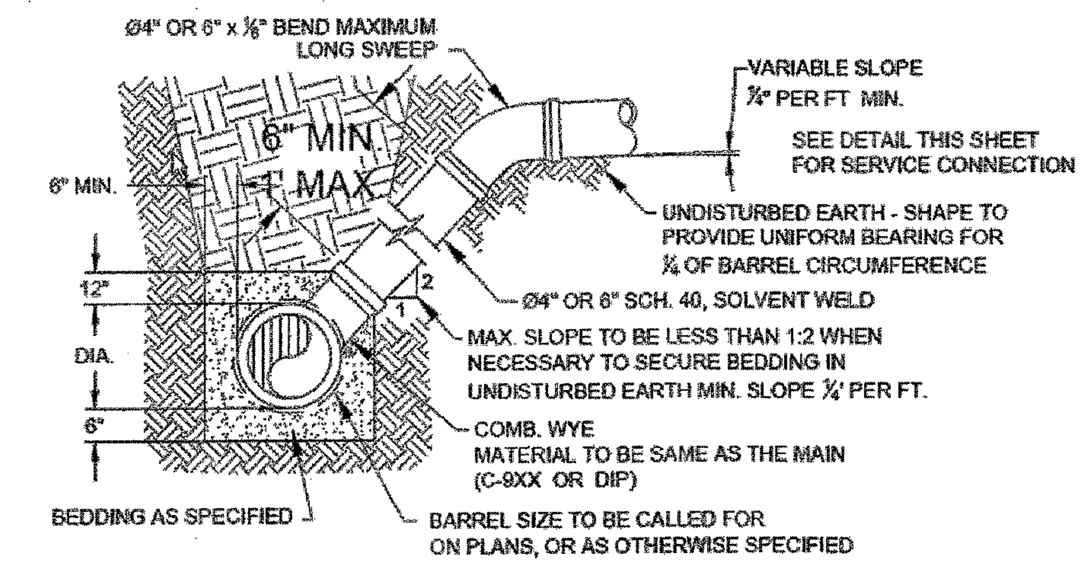

NOTE: FOR PRIVATE 8" SERVICES, MANHOLES ARE REQUIRED FOR TIE-IN TO MAIN

STANDARD SERVICE LATERAL

(MAIN DEPTH LESS THAN 8ft)

NOT TO SCALE

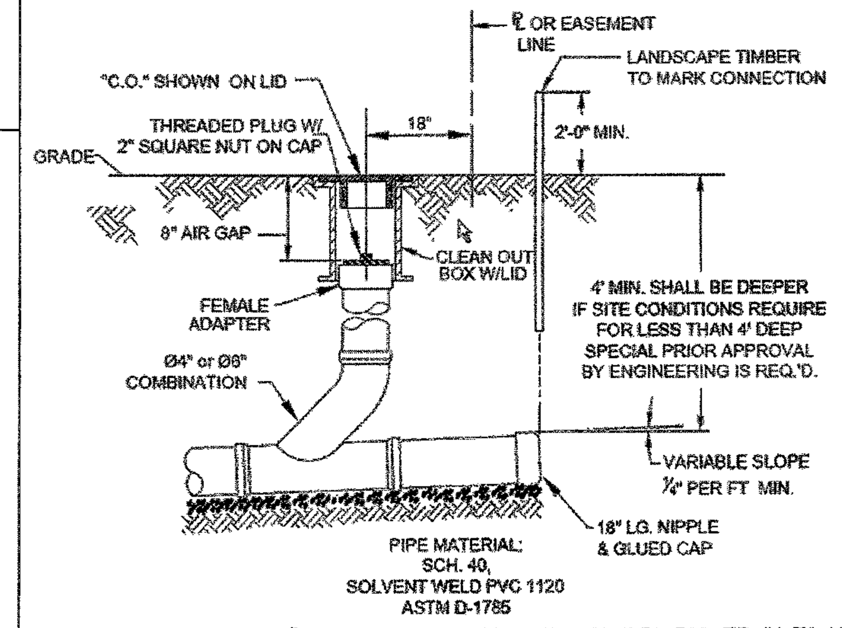

NOTE: FOR PRIVATE 8" SERVICES, MANHOLES ARE REQUIRED FOR TIE-IN TO MAIN

SERVICE CONNECTION & CLEAN-OUT

NOT TO SCALE

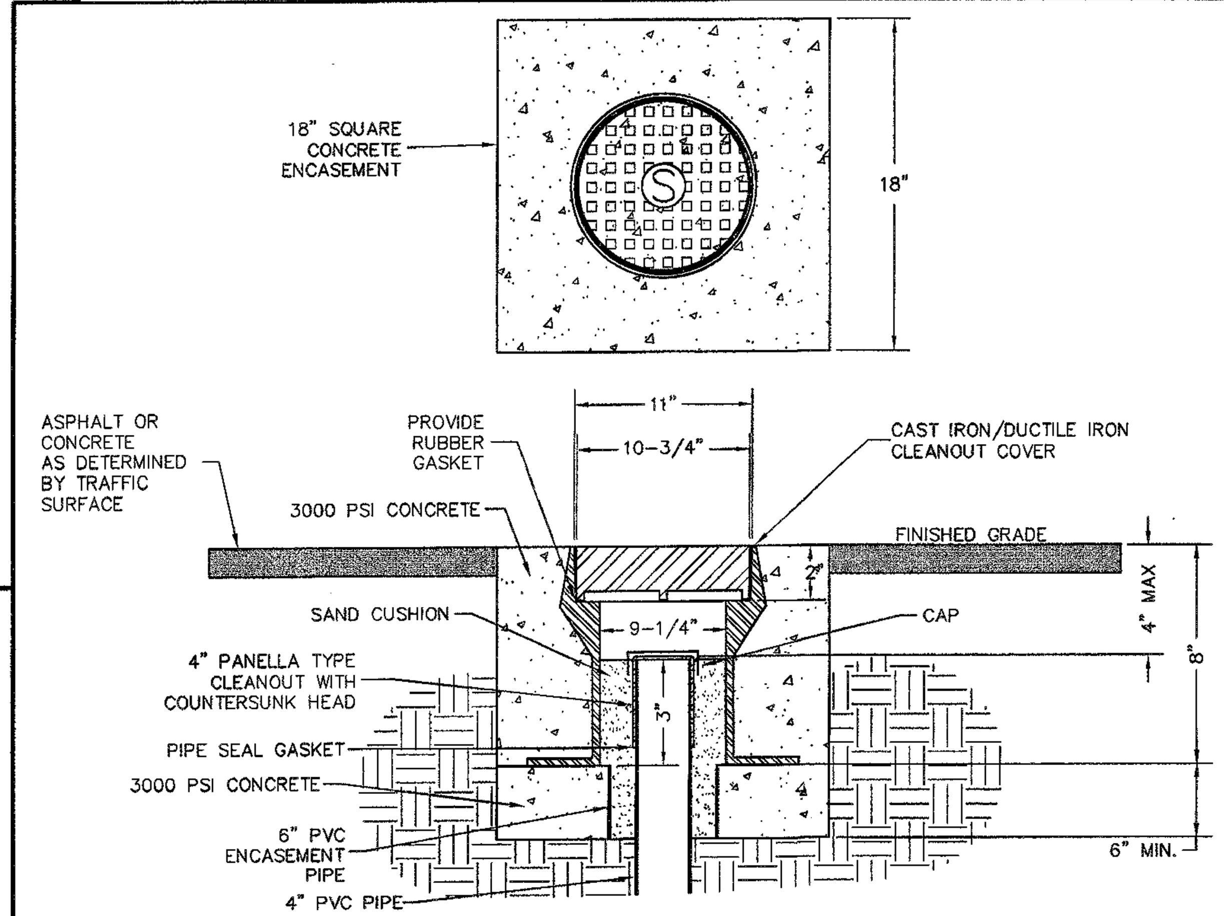

CLEANOUT COVER ASSEMBLY TRAFFIC AREA

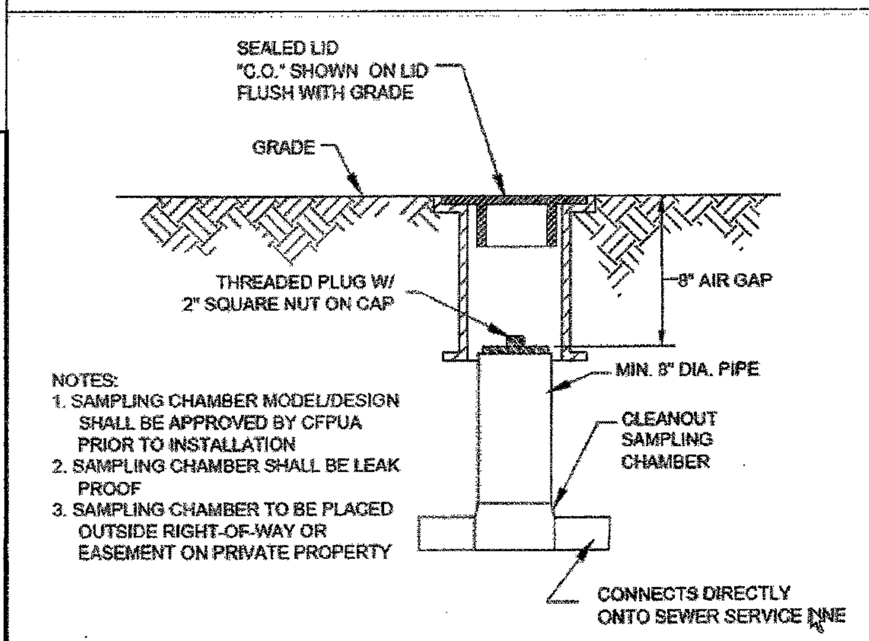

NOTES:
1. SAMPLING CHAMBER MODEL/DESIGN SHALL BE APPROVED BY CFPUA PRIOR TO INSTALLATION
2. SAMPLING CHAMBER SHALL BE LEAK PROOF
3. SAMPLING CHAMBER TO BE PLACED OUTSIDE RIGHT-OF-WAY OR EASEMENT ON PRIVATE PROPERTY

SAMPLING CHAMBER

NOT TO SCALE

GENERAL SITE NOTES:

1. *THE CONTRACTOR SHALL VERIFY LOCATION AND ELEVATION OF ALL UNDERGROUND UTILITIES. THE LOCATION OF ALL EXISTING UTILITIES ARE NOT NECESSARILY SHOWN ON THE PLANS AND WHERE SHOWN ARE ONLY APPROXIMATE. THE CONTRACTOR SHALL ON HIS INITIATIVE AND AT NO EXTRA COSTS HAVE LOCATED ALL UNDERGROUND LINES AND STRUCTURES AS NECESSARY. NO CLAIMS FOR DAMAGES OR EXTRA COMPENSATION SHALL ACCRUE TO THE CONTRACTOR FROM THE PRESENCE OF SUCH PIPE, OTHER OBSTRUCTIONS OR FROM ANY DELAY DUE TO REMOVAL OR REARRANGEMENT OF THE SAME. THE CONTRACTOR SHALL BE RESPONSIBLE FOR ANY DAMAGE TO UNDERGROUND STRUCTURES. THE CONTRACTOR IS RESPONSIBLE FOR CONTACTING ALL NON-SUBSCRIBING UTILITIES. THE CONTRACTOR(S) SHALL CONTACT NORTH CAROLINA "ONE-CALL" AT 1-800-632-4949 FOR ASSISTANCE IN LOCATING EXISTING UTILITIES. CALL AT LEAST 48 HOURS PRIOR TO ANY DIGGING.*
2. *THE LOCATIONS OF ALL UTILITIES SHOWN ON THESE PLANS ARE BASED ON THE AVAILABLE INFORMATION. THE CONTRACTOR SHALL VERIFY THE EXACT LOCATION OF UTILITIES WITH THE UTILITY OWNERS PRIOR TO COMMENCEMENT OF CONSTRUCTION.*
3. *PRIOR TO STARTING CONSTRUCTION, THE GENERAL CONTRACTOR SHALL BE RESPONSIBLE TO VERIFY THAT ALL REQUIRED PERMITS AND APPROVALS HAVE BEEN OBTAINED. NO CONSTRUCTION OR FABRICATION OF ANY ITEM SHALL BEGIN UNTIL THE CONTRACTOR HAS RECEIVED ALL PLANS AND ANY OTHER DOCUMENTATION FROM ALL OF THE PERMITTING AND ANY OTHER REGULATORY AUTHORITIES. FAILURE OF THE CONTRACTOR TO FOLLOW THIS PROCEDURE SHALL CAUSE THE CONTRACTOR TO ASSUME FULL RESPONSIBILITY FOR ANY SUBSEQUENT MODIFICATION OF THE WORK MANDATED BY ANY REGULATORY AUTHORITY. ALL CONSTRUCTION TO BE IN ACCORDANCE WITH PERMITS ISSUED AND APPLICABLE STATE, COUNTY AND LOCAL CODES.*
4. *THE GENERAL CONTRACTOR SHALL CONTACT ALL OWNERS OF EASEMENTS, UTILITIES AND RIGHT-OF-WAYS, PUBLIC OR PRIVATE, PRIOR TO WORKING IN THESE AREAS. ACCESS SHALL BE LIMITED UNTIL PERMISSION IS GRANTED.*
5. *CONTRACTOR SHALL MAINTAIN THE SITE IN A MANNER SO THAT WORKMEN AND PUBLIC SHALL BE PROTECTED FROM INJURY, AND ADJOINING PROPERTY PROTECTED FROM DAMAGE.*
6. *CONTRACTOR IS RESPONSIBLE FOR DAMAGE TO ANY EXISTING ITEM AND/OR MATERIAL INSIDE OR OUTSIDE CONTRACT LIMITS DUE TO CONSTRUCTION OPERATIONS.*
7. *ALL SITE DIMENSIONS ARE TO THE FACE OF CURB, UNLESS OTHERWISE NOTED.*
8. *THE GENERAL CONTRACTOR SHALL KEEP THE AREA OUTSIDE THE "CONSTRUCTION LIMITS" BROOM CLEAN AT ALL TIMES AND REMOVE ALL TRASH AND DEBRIS FROM THE SITE UPON COMPLETION OF THE PROJECT AND AT LEAST ONCE A WEEK DURING CONSTRUCTION.*
9. *BEFORE COMMENCEMENT OF WORK, THE CONTRACTOR SHALL REVIEW ALL PLANS AND SPECIFICATIONS AND THE JOB SITE. THE CONTRACTOR SHALL NOTIFY THE OWNER AND THE ENGINEER WHO PREPARED THE PLANS OF ANY DISCREPANCIES THAT MAY REQUIRE MODIFICATIONS TO THESE PLANS OR OF ANY FIELD CONFLICTS.*
10. *ALL PERMITS RELATIVE TO THE PROJECT MUST BE OBTAINED, PRIOR TO CONSTRUCTION. ALL CONSTRUCTION TO BE IN ACCORDANCE WITH PERMITS ISSUED AND APPLICABLE STATE, COUNTY AND LOCAL CODES.*
11. *ALL WORK IN RIGHT-OF-WAY SHALL BE PERFORMED IN ACCORDANCE WITH "THE CURRENT EDITION OF THE STATE DEPARTMENT OF TRANSPORTATION CONSTRUCTION AND MATERIALS SPECIFICATIONS".*
12. *CONTRACTOR AGREES THAT IN ACCORDANCE WITH GENERALLY ACCEPTED CONSTRUCTION PRACTICES, CONTRACTOR WILL BE REQUIRED TO ASSUME SOLE AND COMPLETE RESPONSIBILITY FOR JOB SITE CONDITIONS DURING THE COURSE OF CONSTRUCTION OF THE PROJECT, INCLUDING SAFETY OF ALL PERSONS AND PROPERTY. THIS REQUIREMENT SHALL BE MADE TO APPLY CONTINUOUSLY AND NOT BE LIMITED TO NORMAL WORKING HOURS. CONTRACTOR FURTHER AGREES TO DEFEND, INDEMNIFY, AND HOLD THE OWNER AND DESIGN PROFESSIONAL HARMLESS OF ANY AND ALL LIABILITY, REAL OR ALLEGED IN CONNECTION WITH THE PERFORMANCE OF WORK ON THIS PROJECT, ACCEPTING LIABILITY ARISING FROM THE SOLE NEGLIGENCE OF THE OWNER OR DESIGN PROFESSIONAL.*
13. *SUBJECT PROPERTY IS NOT LOCATED WITHIN A SPECIAL FLOOD HAZARD ZONE. IT IS LOCATED IN ZONE "X" AS DEFINED BY HUD F.I.R.M. COMMUNITY PANEL NUMBER 3720312600J, WITH AN EFFECTIVE DATE OF APRIL 3, 2006.*

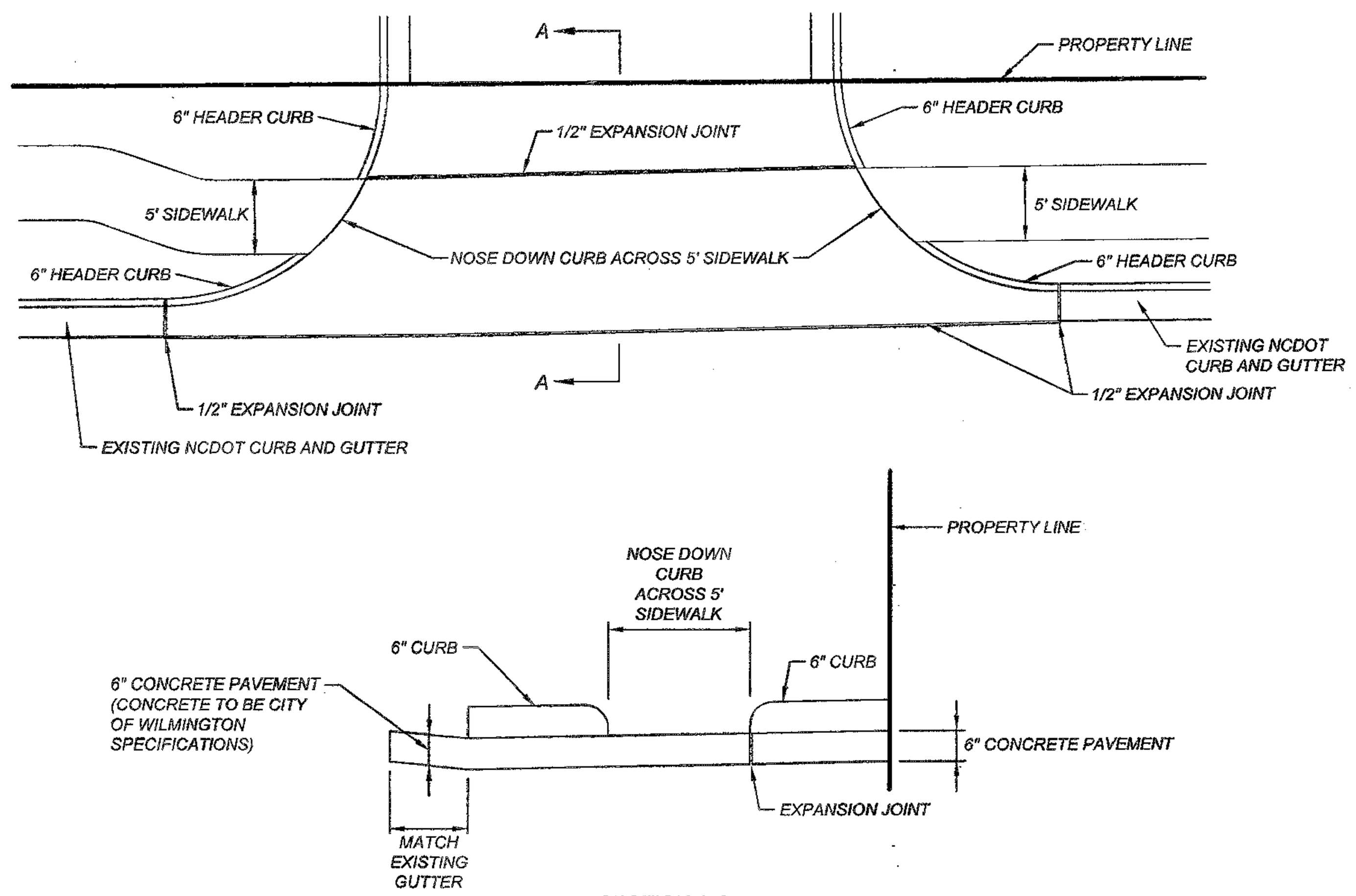

SECTION A-A

SHIPYARD BOULEVARD DETAIL

COMMERCIAL SITE DESIGN, PLLC REGISTERED CORPORATION P-0266 NORTH CAROLINA RALEIGH, NORTH CAROLINA

NORTH CAROLINA PROFESSIONAL SEAL 26411 ENGINEER JEREMY J. BECKETT 04-05-13

PLAN SCALE: NOT TO SCALE	
STREET ADDRESS 2543 CAROLINA BEACH ROAD	
CITY WILMINGTON	STATE NORTH CAROLINA
COUNTY NEW HANOVER	
TAX PARCEL NUMBER R06018-004-023-000	LOCATION CODE NUMBER 32-0062
CSD FILENAME: MCD1216-DT3	

REV	DATE	DESCRIPTION	BY	ISSUE/REF
1	12-12-12	PERMIT ISSUE	JWR	
2	1-16-13	CITY OF WILMINGTON COMMENTS	STH	
3	03-28-13	CITY OF WILMINGTON COMMENTS #2 & NCDOT	JWR	

COMMERCIAL SITE DESIGN
8312 CREEDMOOR ROAD
RALEIGH, NORTH CAROLINA 27615
(919) 848-6121, FAX: (919) 848-3741
WWW.CSITEDESIGN.COM

McDonald's®

THESE PLANS AND SPECIFICATIONS ARE THE PROPERTY OF McDONALD'S CORPORATION AND SHALL NOT BE REPRODUCED WITHOUT THEIR WRITTEN PERMISSION.

OFFICE	RALEIGH REGION
ADDRESS	4601 SIX FORKS ROAD - SUITE 200 - RALEIGH, N.C. 27609

PLAN APPROVAL

	SIGNATURE (2 REQUIRED)	DATE
REGIONAL MGR.		
REGIONAL DEV. DIRECTOR		
REGIONAL CONSTRUCTION MGR.		
REGIONAL REAL ESTATE MGR.		
CO-SIGN SIGNATURES		
AREA CONSTRUCTION MGR.		
CONTRACTOR		

STATUS	DATE	BY
FINAL	-	-
PLAN CHECKED	-	-
AS-BUILT	-	-

C-9
DETAILS

K:\MCD - McDonalds\1216 - Wilmington, NC @ Carolina Beach Rd 32-0062\CAD\MCD1216-DT3.dwg, 4/1/2013 3:17:47 PM, janer

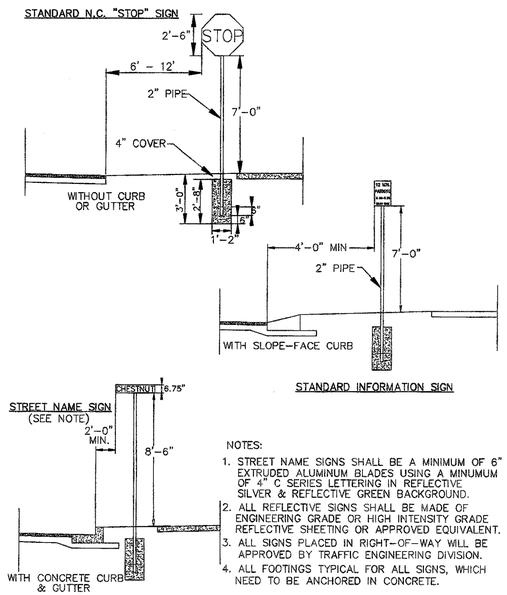

NOTES:

1. STREET NAME SIGNS SHALL BE A MINIMUM OF 6" EXTRUDED ALUMINUM BLADES USING A MINUMUM OF 4" C SERIES LETTERING IN REFLECTIVE SILVER & REFLECTIVE GREEN BACKGROUND.
2. ALL REFLECTIVE SIGNS SHALL BE MADE OF ENGINEERING GRADE OR HIGH INTENSITY GRADE REFLECTIVE SHEETING OR APPROVED EQUIVALENT.
3. ALL SIGNS PLACED IN RIGHT-OF-WAY WILL BE APPROVED BY TRAFFIC ENGINEERING DIVISION.
4. ALL FOOTINGS TYPICAL FOR ALL SIGNS, WHICH NEED TO BE ANCHORED IN CONCRETE.

STANDARD SIGN INSTALLATION LOCATION
SD 15-03

NOT TO SCALE

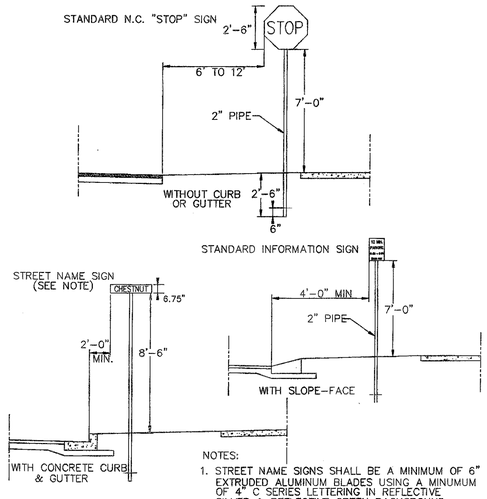

NOTES:

1. STREET NAME SIGNS SHALL BE A MINIMUM OF 6" EXTRUDED ALUMINUM BLADES USING A MINUMUM OF 4" C SERIES LETTERING IN REFLECTIVE SILVER & REFLECTIVE GREEN BACKGROUND.
2. ALL REFLECTIVE SIGNS SHALL BE MADE OF ENGINEERING GRADE OR HIGH INTENSITY GRADE REFLECTIVE SHEETING OR APPROVED EQUIVALENT.
3. ALL SIGNS PLACED IN RIGHT-OF-WAY WILL BE APPROVED BY TRAFFIC ENGINEERING DIVISION.
4. ALL FOOTINGS TYPICAL FOR ALL SIGNS, WHICH NEED TO BE ANCHORED IN CONCRETE.

STANDARD SIGN INSTALLATION LOCATION
SD 15-04

NOT TO SCALE

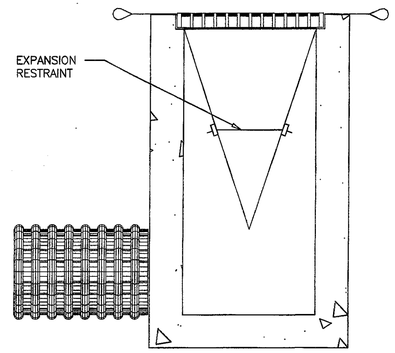

INSTALLATION DETAIL

DETAIL OF INLET SEDIMENT CONTROL DEVICE

PROJECT:		
CITY:		DR. BY:
STATE:	DATE:	DR. NO:

SILTSACK®
SPECIFICATIONS

NOTE: THE SILTSACK ® WILL BE MANUFACTURED FROM A WOVEN POLYPROPYLENE FABRIC THAT MEETS OR EXCEEDS THE FOLLOWING SPECIFICATIONS.

REGULAR FLOW SILTSACK®
(FOR AREAS OF LOW TO MODERATE PRECIPITATION AND RUN-OFF)

PROPERTIES	TEST METHOD	UNITS
GRAB TENSILE STRENGTH	ASTM D-4632	300 LBS
GRAB TENSILE ELONGATION	ASTM D-4632	20 %
PUNCTURE	ASTM D-4833	120 LBS
MULLEN BURST	ASTM D-3786	800 PSI
TRAPEZOID TEAR	ASTM D-4533	120 LBS
UV RESISTANCE	ASTM D-4355	80 %
APPARENT OPENING SIZE	ASTM D-4751	40 US SIEVE
FLOW RATE	ASTM D-4491	40 GAL/MIN/SQ FT
PERMITTIVITY	ASTM D-4491	0.55 SEC -1

HI-FLOW SILTSACK®
(FOR AREAS OF MODERATE TO HEAVY PRECIPITATION AND RUN-OFF)

PROPERTIES	TEST METHOD	UNITS
GRAB TENSILE STRENGTH	ASTM D-4632	265 LBS
GRAB TENSILE ELONGATION	ASTM D-4632	20 %
PUNCTURE	ASTM D-4833	135 LBS
MULLEN BURST	ASTM D-3786	420 PSI
TRAPEZOID TEAR	ASTM D-4533	45 LBS
UV RESISTANCE	ASTM D-4355	90 %
APPARENT OPENING SIZE	ASTM D-4751	20 US SIEVE
FLOW RATE	ASTM D-4491	200 GAL/MIN/SQ FT
PERMITTIVITY	ASTM D-4491	1.5 SEC -1

OIL-ABSORBANT SILTSACK®
(FOR AREAS WHERE THERE IS A CONCERN FOR OIL RUN-OFF OR SPILLS)

DEPENDING ON YOUR PARTICULAR APPLICATION, THE SILTSACK CAN BE MADE FROM EITHER ONE OF THE ABOVE FABRICS WITH AN OIL-ABSORBANT PILLOW INSERT OR, MADE COMPLETELY FROM AN OIL-ABSORBANT SILTSACK®, WITH A WOVEN PILLOW INSERT.

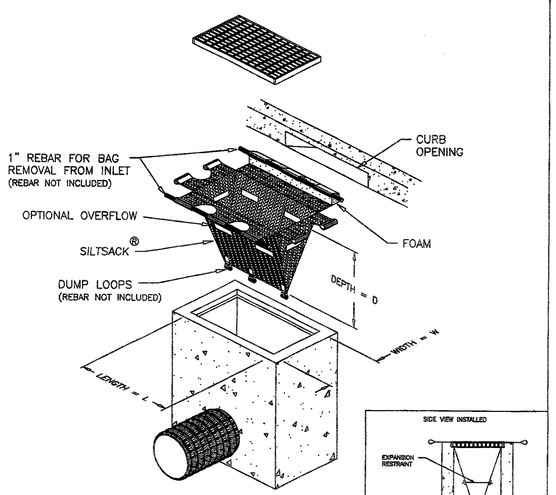

DETAIL OF INLET SEDIMENT CONTROL DEVICE WITH CURB DEFLECTOR

PROJECT:		
CITY:		DR. BY:
STATE:	DATE:	DR. NO:

SILTSACK®
SPECIFICATIONS

NOTE: THE SILTSACK ® WILL BE MANUFACTURED FROM A WOVEN POLYPROPYLENE FABRIC THAT MEETS OR EXCEEDS THE FOLLOWING SPECIFICATIONS.

REGULAR FLOW SILTSACK®
(FOR AREAS OF LOW TO MODERATE PRECIPITATION AND RUN-OFF)

PROPERTIES	TEST METHOD	UNITS
GRAB TENSILE STRENGTH	ASTM D-4632	300 LBS
GRAB TENSILE ELONGATION	ASTM D-4632	20 %
PUNCTURE	ASTM D-4833	120 LBS
MULLEN BURST	ASTM D-3786	800 PSI
TRAPEZOID TEAR	ASTM D-4533	120 LBS
UV RESISTANCE	ASTM D-4355	80 %
APPARENT OPENING SIZE	ASTM D-4751	40 US SIEVE
FLOW RATE	ASTM D-4491	40 GAL/MIN/SQ FT
PERMITTIVITY	ASTM D-4491	0.55 SEC -1

HI-FLOW SILTSACK®
(FOR AREAS OF MODERATE TO HEAVY PRECIPITATION AND RUN-OFF)

PROPERTIES	TEST METHOD	UNITS
GRAB TENSILE STRENGTH	ASTM D-4632	265 LBS
GRAB TENSILE ELONGATION	ASTM D-4632	20 %
PUNCTURE	ASTM D-4833	135 LBS
MULLEN BURST	ASTM D-3786	420 PSI
TRAPEZOID TEAR	ASTM D-4533	45 LBS
UV RESISTANCE	ASTM D-4355	90 %
APPARENT OPENING SIZE	ASTM D-4751	20 US SIEVE
FLOW RATE	ASTM D-4491	200 GAL/MIN/SQ FT
PERMITTIVITY	ASTM D-4491	1.5 SEC -1

OIL-ABSORBANT SILTSACK®
(FOR AREAS WHERE THERE IS A CONCERN FOR OIL RUN-OFF OR SPILLS)

DEPENDING ON YOUR PARTICULAR APPLICATION, THE SILTSACK CAN BE MADE FROM EITHER ONE OF THE ABOVE FABRICS WITH AN OIL-ABSORBANT PILLOW INSERT OR, MADE COMPLETELY FROM AN OIL-ABSORBANT SILTSACK®, WITH A WOVEN PILLOW INSERT.

COMMERCIAL SITE DESIGN REGISTERED CORPORATION P-0266 RALEIGH, NORTH CAROLINA

NORTH CAROLINA PROFESSIONAL SEAL 26411 ENGINEER JEREMY J. BECKETT 04-05-13

REV	DATE	DESCRIPTION	BY	ISSUE/REF
1	12-12-12	PERMIT ISSUE	JWR	
2	1-16-13	CITY OF WILMINGTON COMMENTS	STH	
3	03-28-13	CITY OF WILMINGTON COMMENTS #2 & NCDOT	JWR	

COMMERCIAL SITE DESIGN
8312 CREEDMOOR ROAD
RALEIGH, NORTH CAROLINA 27613
(919) 848-4421, FAX: (919) 848-3741
WWW.CSITEDESIGN.COM

McDonald's

THESE PLANS AND SPECIFICATIONS ARE THE PROPERTY OF McDONALDS CORPORATION AND SHALL NOT BE REPRODUCED WITHOUT THEIR WRITTEN PERMISSION.

RALEIGH REGION
4601 SIX FORKS ROAD - SUITE 200 - RALEIGH, N.C. 27609

OFFICE
ADDRESS

PLAN APPROVAL

SIGNATURE (2 REQUIRED)	DATE
REGIONAL MGR.	
REGIONAL DEV. DIRECTOR	
REGIONAL CONSTRUCTION MGR.	
REGIONAL REAL ESTATE MGR.	

CO-SIGN SIGNATURES

AREA CONSTRUCTION MGR.	
CONTRACTOR	

STATUS	DATE	BY
FINAL	-	-
PLAN CHECKED	-	-
AS-BUILT	-	-

PLAN SCALE: NOT TO SCALE

STREET ADDRESS
2543 CAROLINA BEACH ROAD

CITY	STATE
WILMINGTON	NORTH CAROLINA

COUNTY
NEW HANOVER

TAX PARCEL NUMBER	LOCATION CODE NUMBER
R06018-004-023-000	32-0062
CSD FILENAME: MCD1216-DT3A	

C-9a
DETAILS

:\MCD - McDonalds\1216 - Wilmington, NC @ Carolina Beach Rd 32-0062\CAD\MCD1216-DT3A.dwg, 4/3/2013 10:31:00 AM, janer

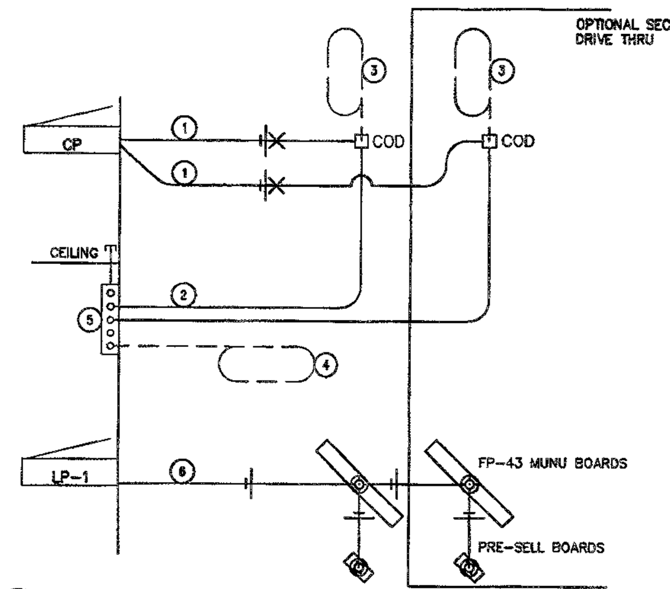

1. PROVIDE PER POS & COD ISOLATED GROUND/DEDICATED CIRCUIT DETAIL. 1/2"C-2#12 & 1#12 GROUND & 1 #12 ISOLATED GROUND
2. 1 1/2"C FOR REMOTE DETECTOR & COD AUDIO & DATA CABLES. SEE REMOTE VEHICLE DETECTOR WIRING DIAGRAM (3/DT1.0). EC TO PROVIDE 3 PULL STRINGS INSIDE CONDUIT.
3. 2 1/2"C FOR COD LOOP DETECTOR, ELECTRICAL EQUIPMENT ITEM #217.11E1
4. 2 1/2"C FOR ORDER/CASH BOOTH LOOP DETECTOR, ELECTRICAL EQUIPMENT ITEM #217.11E1
5. 215.02E4 IN ORDER/CASH BOOTH. PROVIDE 2" HOLE & GROMMET IN JUNCTION BOX COVER PLATE FOR POS DATA CABLES. PROVIDE 2 1/2"C ABOVE CEILING.
6. 1/2"C-2#12, POWER FOR ILLUMINATION OF MENUBOARD

2/DT1.0 DRIVE THRU SITE WIRING DIAGRAM
(COD AND SPEAKER POST)

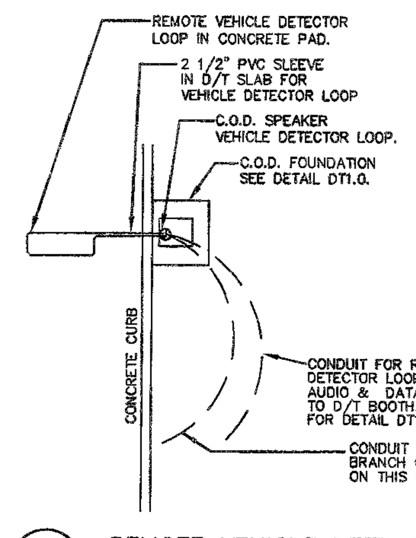

3/SD1 REMOTE VEHICLE DETECTOR WIRING DIAGRAM
NOT TO SCALE

DETECTOR LOOP:

DISTRIBUTOR: INDICATOR CONTROLS CORPORATION 3000 EAST LAS HERMANAS STREET, RANCHO DOMINGUEZ, CALIFORNIA 90221 CONTACT: (800)733-7872 FOR ORDERING OR (310)603-8825 GREG ODION FOR SERVICE

MATERIAL: POLYVINYLCHLORIDE TUBING 1/2" I.D. 100 PSI LOOP MADE FROM ONE LENGTH OF THIN FOURTEEN GAUGE STRANDED WIRE. LEAD-IN IS PRE-TWISTED AT FACTORY.

CONSTRUCTION: FORMED WITH ONE CONTINUOUS LENGTH OF PVC WITH NO SHARP CORNERS AS IN DRAWING ABOVE. WIRE LOOPED, FORMED & PIGTAILED AS ILLUSTRATED ON THIS SHEET.

NOTE: DO NOT USE REINFORCEMENT RODS BELOW LOOP. KEEP ALL REBARS AND SCREENING AT LEAST 2 FEET AWAY FROM LOOP.

NOTES:
-PIER DEPTHS REQUIRED ARE MINIMUMS. ALL PIERS TO EXTEND TO FROST DEPTH AS DETERMINED BY LOCAL JURISDICTION.
-TOP OF PIERS SHALL BE SLOPED SUCH THAT MOISTURE CANNOT ACCUMULATE.
-MINIMUM ALLOWABLE LATERAL SOIL BEARING PRESSURE 100 PSF/FT OF DEPTH (x2)

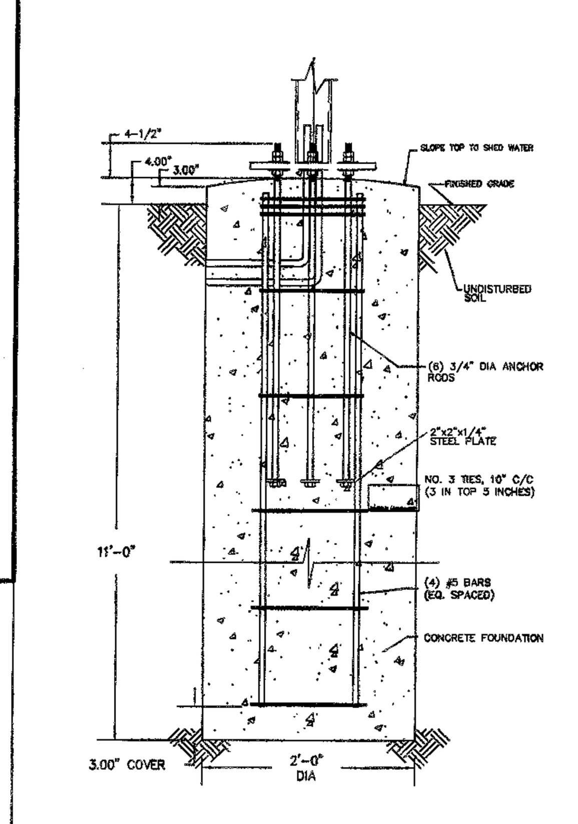

FOUNDATION
NTS

NOTES:
-TOP OF PIERS SHALL BE SLOPED SUCH THAT MOISTURE CANNOT ACCUMULATE.
-ANCHOR RODS, NUTS, AND WASHERS SHALL BE SHIPPED AS AN ASSEMBLY FROM THE SIGN/LIGHTING MANUFACTURER

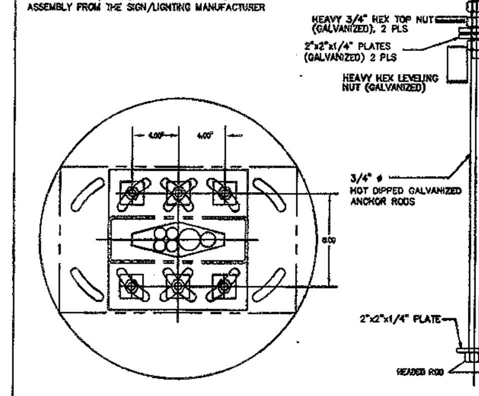

ANCHOR BOLT PATTERN
NTS

NOTES:
-TOP OF PIERS SHALL BE SLOPED SUCH THAT MOISTURE CANNOT ACCUMULATE.
-ANCHOR RODS, NUTS, AND WASHERS SHALL BE SHIPPED AS AN ASSEMBLY FROM THE SIGN/LIGHTING MANUFACTURER
-DO NOT CUT ANCHOR BOLTS AFTER INSTALLATION OF POLE

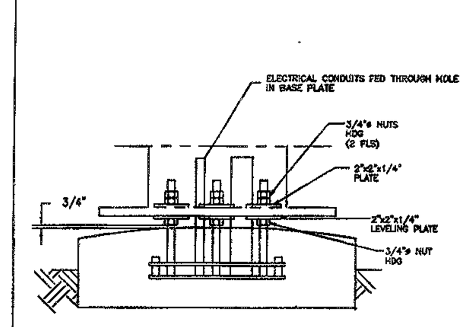

CONNECTION DETAILS
NTS

GENERAL NOTES

-THE FOLLOWING CODES WERE USED IN DESIGN:
-IBC 2009
-ASCE 7-05
-ACI 318-08
-AISC 13th EDITION
-AWS D1.1
-WIND SPEED 150 MPH (MPH 3-SEC GUST)
-EXPOSURE C
-DESIGN LOADS DERIVED FROM THESE CODES AND FORCES
-AXIAL - 850#
-SHEAR - 3,638#
-MOMENT - 20,281#'

-ALL FOOTING EXCAVATIONS ARE TO BE CLEAR OF WATER AND FOREIGN MATTER BEFORE PLACING CONCRETE
-MINIMUM ALLOWABLE LATERAL SOIL BEARING PRESSURE OF 100PSF/FT (x2)
-SITE SOIL CONDITIONS TO BE CONFIRMED BY GEOTECHNICAL ENGINEER. IF ASSUMED SOIL CONDITIONS ARE NOT PRESENT, FOUNDATION SHALL BE DESIGNED BY A LICENSED STRUCTURAL ENGINEER TAKING INTO ACCOUNT ACTUAL SITE SOIL CONDITIONS.
-TOP 6" OF SOIL NEGLECTED IN EMBEDMENT DEPTH CALCULATIONS (EMBEDMENT DEPTHS SHOWN ARE FROM GRADE)

-ELECTRICAL CONTRACTOR TO PROVIDE INFORMATION ON CONDUIT AND ELECTRICAL REQUIREMENTS.

CONCRETE:

-ALL FOOTINGS SHALL BEAR ON FIRM UNDISTURBED RESIDUAL SOIL AND/OR ENGINEERED EARTH FILL COMPACTED TO 98% OF ITS MAXIMUM DRY DENSITY AS PER ASTM D 698-70 (STANDARD PROCTOR) UNLESS NOTED OTHERWISE.
-ALL PIERS TO EXTEND TO FROST DEPTH AS DETERMINED BY LOCAL JURISDICTION.
-TOP OF PIERS SHALL BE SLOPED SUCH THAT MOISTURE CANNOT ACCUMULATE.
-MINIMUM CONCRETE STRENGTH (f'c=3,000 PSI) SHALL CONFORM WITH MCDONALDS CAST-IN-PLACE CONCRETE SPECIFICATIONS SECTION 2.13-A
-USE OF ADMIXTURES SHALL CONFORM TO MCDONALDS CAST-IN-PLACE CONCRETE SPECIFICATION SECTION 2.5
-AIR ENTRAINMENT SHALL CONFORM WITH MCDONALDS CAST-IN-PLACE CONCRETE SPECIFICATION SECTIONS 2.6-A & 2.13-A
-WATER CONTENT RATIO SHALL CONFORM TO MCDONALDS CAST-IN-PLACE CONCRETE SPECIFICATIONS SECTION 2.13-A
-FOUNDATION CONCRETE TO BE TESTED PER MCDONALDS CAST-IN-PLACE CONCRETE SPECIFICATIONS SECTION 3.14
-PROVIDE A MINIMUM 3" OF CONCRETE COVER OVER ALL EMBEDDED STEEL.
-REINFORCEMENT PLACEMENT SHALL CONFORM TO MCDONALDS CAST-IN-PLACE CONCRETE SPECIFICATIONS SECTIONS 3.2 & 3.5.
-ANCHOR RODS TO BE SET IN ACCORDANCE WITH AISC CODE OF STANDARD PRACTICE
-DO NOT PLACE POLES ON CONCRETE UNTIL CONCRETE HAS CURED PER MCDONALDS CAST-IN-PLACE CONCRETE SPECIFICATION, SECTION 3.11-E.

STEEL:

-STEEL PIPE SECTION: ASTM A53 OR A252 TYPE E GRADE B (Fy=35ksi)
-HSS ROUND SECTION: ASTM A500 GRADE B (Fy=42ksi)
-HSS SQUARE/RECTANGULAR SECTIONS: ASTM A500 GRADE B (Fy=46ksi)
-HEADED ANCHOR RODS ASTM F1554 GR 55, AN ACCEPTABLE ALTERNATIVE IS ASTM F1554 GR 55, S1 WHEN THE EMBEDDED END OF THE ROD IS THREADED AND THE NUT TACK WELDED PRIOR TO GALVANIZATION.
-STEEL ANGLES, CHANNELS, STRUCTURAL SHAPES AND PLATES: ASTM A36
-REINFORCEMENT: ASTM A615 GRADE 60
-NUTS: ASTM A563A, HEAVY HEX
-WASHERS: ASTM F844 A36
-USE ASTM A153 CLASS C HOT DIPPED GALVANIZED BOLTS AND FASTENERS
-ANCHOR RODS, NUTS, AND WASHERS SHALL BE SHIPPED AS AN ASSEMBLY FROM THE SIGN/LIGHTING MANUFACTURER
-NO FIELD HEATING TO BEND STEEL SHALL BE ALLOWED WITHOUT ENGINEER'S APPROVAL.
-DO NOT CUT ANCHOR RODS AFTER INSTALLATION OF POLE
-AFTER INSTALLATION, ALL EXPOSED STEEL SHALL BE PAINTED WITH AN ENAMEL PAINT TO INHIBIT CORROSION.
-ANY FIELD WELDING SHALL FIRST BE VERIFIED BY ENGINEER AND PERFORMED IN ACCORDANCE WITH AWS D1.1.

-REFER TO SIGN MANUFACTURER DRAWINGS AND INSTRUCTIONS FOR ADDITIONAL INFORMATION.
-CONTRACTOR (INSTALLER) IS RESPONSIBLE FOR THE MEANS AND METHODS OF CONSTRUCTION IN REGARDS TO JOBSITE SAFETY.
-DETAILS AND STRUCTURAL MEMBERS NOT SHOWN DESIGNED BY OTHERS
-ANY MODIFICATIONS ARE TO BE VERIFIED BY AN ENGINEER

THIS FOUNDATION TO BE USED ONLY WITH FLORIDA PLASTICS INTERNATIONAL INC. STANDARD OPO-4/ FP43 MENU BOARD WITH TOPPER

ENCON SERVICES, INC.
AARON BIEDENBACH
2272 JAUDON ROAD
DOVER, FL 33527
813-655-3373
FLPE #52949, FLEB #9394

OPO-4/FP43_MENUBOARD FOUNDATION_DESIGN
150MPH_EXP-C_DESIGN
1 OF 1

Bollard

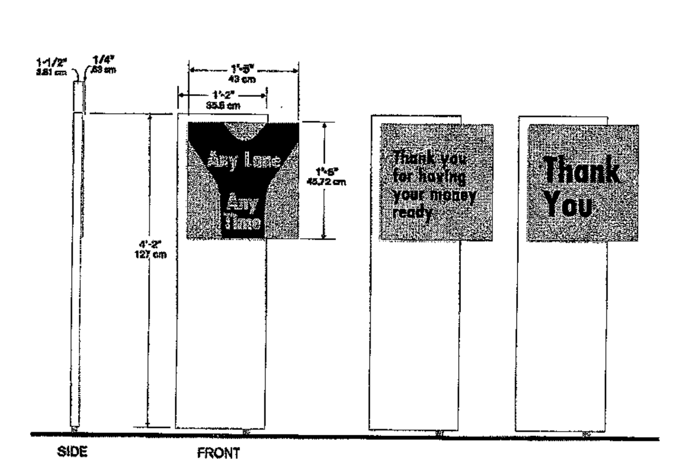

Illumination:	N/A
Ship Weight:	26 lbs.
Other:	• PMS 109 yellow reflective message panel with black decal graphics/letters • Two mounting systems available: direct burial or anchor bolt. • Additional copy available upon request

Everbrite, LLC, 315 Marion Ave., South Milwaukee, WI, 53172 P: 888-857-4078 F: 877-430-7363 www.everbrite.com

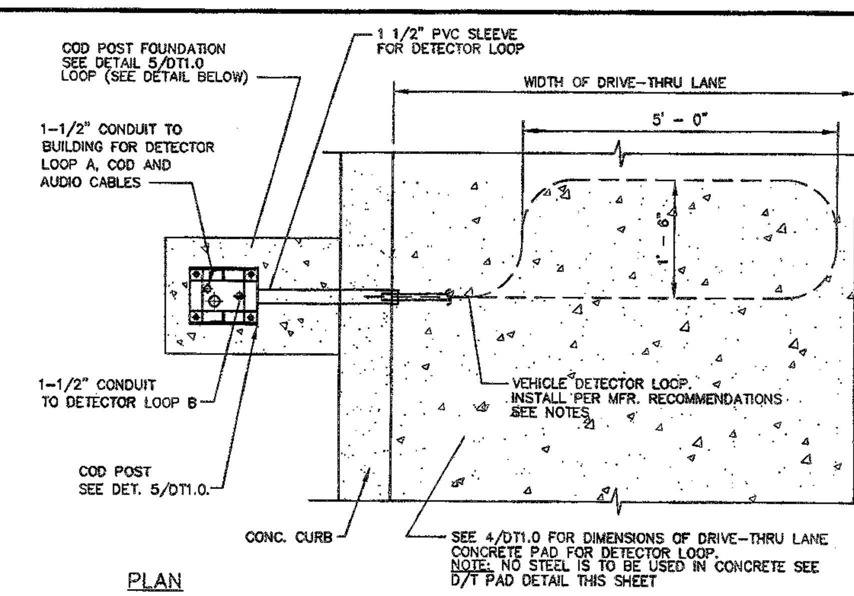

PLAN

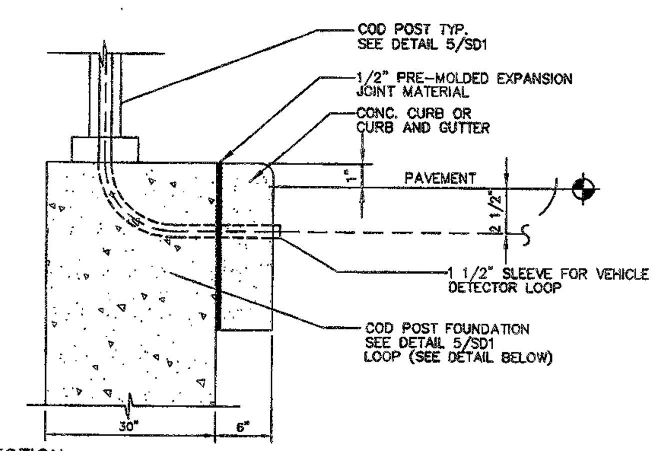

SECTION

5/SD2 DETECTOR LOOP DETAIL AT C.O.D.
NOT TO SCALE

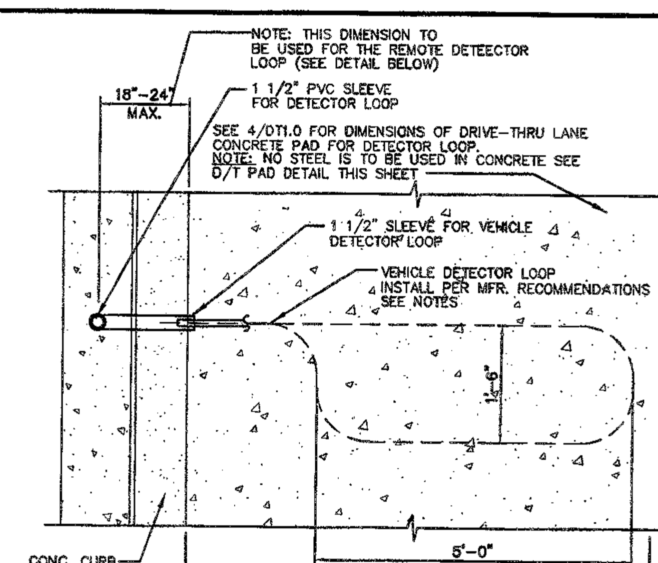

PLAN

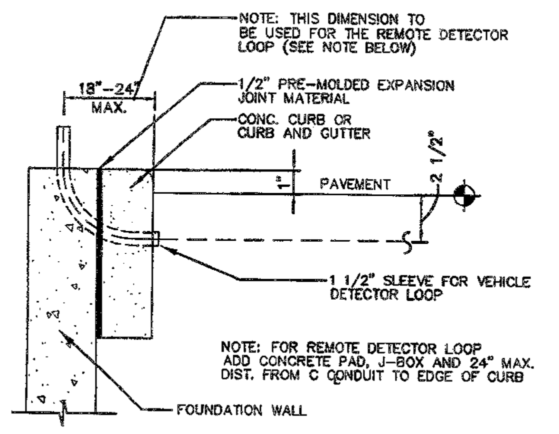

SECTION

6/SD2 DETECTOR LOOP DETAIL AT DRIVE THRU WINDOW
NONE

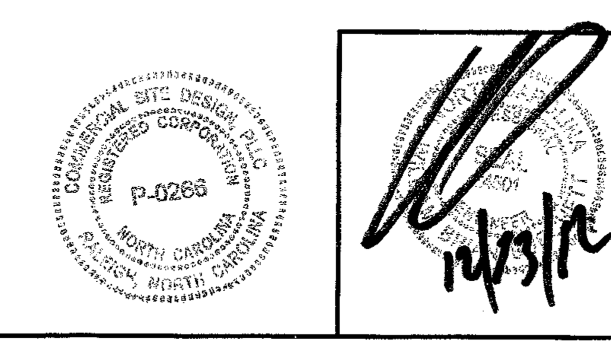

REV	DATE	DESCRIPTION	BY	ISSUE/REF
1	12-12-12	PERMIT ISSUE	JWR	

COMMERCIAL SITE DESIGN
8312 CREEDMOOR ROAD
RALEIGH, NORTH CAROLINA 27613
(919) 848-6121, FAX: (919) 848-3741
WWW.CSITEDESIGN.COM

McDonald's®

THESE PLANS AND SPECIFICATIONS ARE THE PROPERTY OF McDONALD'S CORPORATION AND SHALL NOT BE REPRODUCED WITHOUT THEIR WRITTEN PERMISSION.

OFFICE	RALEIGH REGION
ADDRESS	4601 SIX FORKS ROAD - SUITE 200 - RALEIGH, N.C. 27609

PLAN APPROVAL

	SIGNATURE (2 REQUIRED)	DATE
REGIONAL MGR.		
REGIONAL DEV. DIRECTOR		
REGIONAL CONSTRUCTION MGR.		
REGIONAL REAL ESTATE MGR.		
CO-SIGN SIGNATURES		
AREA CONSTRUCTION MGR.		
CONTRACTOR		

PLAN SCALE: NOT TO SCALE	
STREET ADDRESS 2543 CAROLINA BEACH ROAD	
CITY WILMINGTON	STATE NORTH CAROLINA
COUNTY NEW HANOVER	
TAX PARCEL NUMBER R06018-004-023-000	LOCATION CODE NUMBER 32-0062
CSD FILENAME: MCD1216-MD1	

STATUS	DATE	BY
FINAL	-	-
PLAN CHECKED	-	-
AS-BUILT	-	-

C-10
MENU BOARD DETAILS

K:\MCD - McDonalds\1216 - Wilmington, NC @ Carolina Beach Rd 32-0062\CAD\MCD1216-MD1.dwg, 12/13/2012 9:40:51 AM, janer

NOTE:

-DESIGN CODES
IBC 2009
ASCE 7-05
ACI 318-08
AISC 13TH EDITION
AWS D1.1
WIND SPEED -- 150 MPH, 3 SEC GUST
-EXPOSURE C

-USE 3000 PSI CONCRETE COMPRESSIVE STRENGTH (f'c)
-PIER DEPTHS REQUIRED ARE MINIMUMS. ALL PIERS TO EXTEND TO FROST DEPTH AS DETERMINED BY LOCAL JURISDICTION.
-TOP OF PIERS SHALL BE SLOPED SUCH THAT MOISTURE CANNOT ACCUMULATE.
-ELECTRICAL CONTRACTOR TO PROVIDE INFORMATION ON CONDUIT AND ELECTRICAL REQUIREMENTS.
-MINIMUM ALLOWABLE LATERAL SOIL BEARING PRESSURE 100 PSF/FT OF DEPTH x2.
-TOP 6" OF SOIL NEGLECTED IN EMBEDMENT DEPTH CALCULATIONS (EMBEDMENT DEPTHS SHOWN ARE FROM GRADE)
-3" MIN. CONCRETE COVER FOR REINFORCEMENT
-DESIGN LOADS DERIVED FROM THESE CODES AND FORCES
AXIAL LOAD -- 1320 LBS
SHEAR FORCE -- 1300 LBS
OVERTURNING MOMENT -- 9900 LB-FT

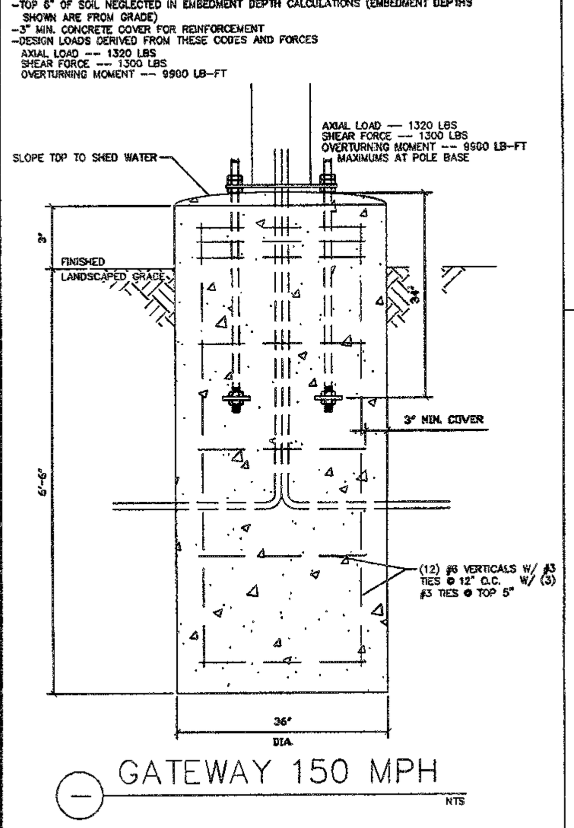

GATEWAY 150 MPH
NTS

NOTES:

-TOP OF PIERS SHALL BE SLOPED SUCH THAT MOISTURE CANNOT ACCUMULATE.
-HOT DIPPED GALVANIZED BOLTS
-F1554 GRADE 36 ANCHOR BOLTS
-ANCHOR BOLTS TO BE SET IN ACCORDANCE WITH AISC CODE OF STANDARD PRACTICE
-ANCHOR RODS, NUTS, AND WASHERS SHALL BE SHIPPED AS AN ASSEMBLY FROM THE SIGN/LIGHTING MANUFACTURER
-DO NOT CUT ANCHOR BOLTS AFTER INSTALLATION OF POLE

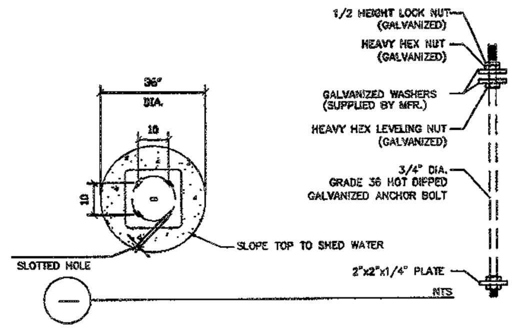

NOTES:

-TOP OF PIERS SHALL BE SLOPED SUCH THAT MOISTURE CANNOT ACCUMULATE.
-ANCHOR RODS, NUTS, AND WASHERS SHALL BE SHIPPED AS AN ASSEMBLY FROM THE SIGN/LIGHTING MANUFACTURER
-DO NOT CUT ANCHOR BOLTS AFTER INSTALLATION OF POLE

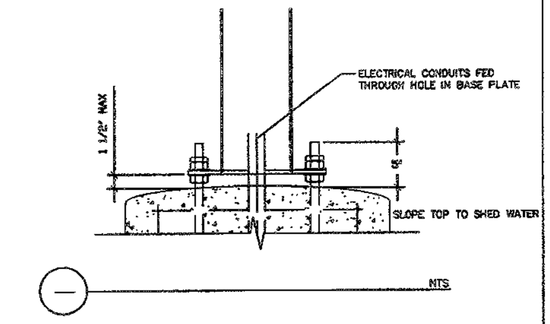

GENERAL NOTES

-THE FOLLOWING CODES WERE USED IN DESIGN:
-IBC 2009
-ASCE 7-05
-ACI 318-08
-AISC 13th EDITION
-AWS D1.1
-WIND SPEED 150 MPH, 3 SEC GUST
-EXPOSURE C
-DESIGN LOADS DERIVED FROM THESE CODES AND FORCES
-AXIAL – 1320 LBS
-SHEAR – 1300 LBS
-MOMENT – 9900 LB-FT

-ALL FOOTING EXCAVATIONS ARE TO BE CLEAR OF WATER AND FOREIGN MATTER BEFORE PLACING CONCRETE
-MINIMUM ALLOWABLE LATERAL SOIL BEARING PRESSURE OF 100PSF/FT (x2)
-SITE SOIL CONDITIONS TO BE CONFIRMED BY GEOTECHNICAL ENGINEER. IF ASSUMED SOIL CONDITIONS ARE NOT PRESENT, FOUNDATION SHALL BE DESIGNED BY A LICENSED STRUCTURAL ENGINEER TAKING INTO ACCOUNT ACTUAL SITE SOIL CONDITIONS.
-TOP 6" OF SOIL NEGLECTED IN EMBEDMENT DEPTH CALCULATIONS (EMBEDMENT DEPTHS SHOWN ARE FROM GRADE)

-ELECTRICAL CONTRACTOR TO PROVIDE INFORMATION ON CONDUIT AND ELECTRICAL REQUIREMENTS.

CONCRETE:

-ALL FOOTINGS SHALL BEAR ON FIRM UNDISTURBED RESIDUAL SOIL AND/OR ENGINEERED EARTH FILL COMPACTED TO 98% OF ITS MAXIMUM DRY DENSITY AS PER ASTM D 698-70 (STANDARD PROCTOR) UNLESS NOTED OTHERWISE.
-ALL PIERS TO EXTEND TO FROST DEPTH AS DETERMINED BY LOCAL JURISDICTION.
-TOP OF PIERS SHALL BE SLOPED SUCH THAT MOISTURE CANNOT ACCUMULATE.
-MINIMUM CONCRETE STRENGTH (f'c) SHOULD CONFORM WITH MCDONALDS CAST-IN-PLACE CONCRETE SPECIFICATIONS SECTION 2.13-A
-USE OF ADMIXTURES SHALL CONFORM TO MCDONALDS CAST-IN-PLACE CONCRETE SPECIFICATION SECTION 2.6
-AIR ENTRAINMENT SHALL CONFORM WITH MCDONALDS CAST-IN-PLACE CONCRETE SPECIFICATION SECTIONS 2.6-A & 2.13-A
-WATER CONTENT RATIO SHALL CONFORM TO MCDONALDS CAST-IN-PLACE CONCRETE SPECIFICATIONS SECTION 2.13-A
-FOUNDATION CONCRETE TO BE TESTED PER MCDONALDS CAST-IN-PLACE CONCRETE SPECIFICATIONS SECTION 3.14
-PROVIDE A MINIMUM 3" OF CONCRETE COVER OVER ALL EMBEDDED STEEL.
-REINFORCEMENT PLACEMENT SHALL CONFORM TO MCDONALDS CAST-IN-PLACE CONCRETE SPECIFICATIONS SECTIONS 3.2 & 3.5.
-ANCHOR BOLTS TO BE SET IN ACCORDANCE WITH AISC CODE OF STANDARD PRACTICE
-DO NOT PLACE POLES ON CONCRETE UNTIL CONCRETE HAS CURED PER MCDONALDS CAST-IN-PLACE CONCRETE SPECIFICATION, SECTION 3.11-E.

STEEL:

-STEEL PIPE SECTION: ASTM A53 OR A252 TYPE E GRADE B (Fy = 35ksi)
-HSS ROUND SECTION: ASTM A500 GRADE B (Fy = 42ksi)
-HSS SQUARE/RECTANGULAR SECTIONS: ASTM A500 GRADE B (Fy = 46ksi)
-CONNECTION BOLTS A325
-STEEL ANGLES, CHANNELS, STRUCTURAL SHAPES AND PLATES: ASTM A36
-REINFORCEMENT: GRADE 60
-NUTS: A563DH OR A194-2H
-WASHERS: A36
-USE HOT DIPPED GALVANIZED BOLTS AND FASTENERS
-ANCHOR RODS, NUTS, AND WASHERS SHALL BE SHIPPED AS AN ASSEMBLY FROM THE SIGN/LIGHTING MANUFACTURER
-NO FIELD HEATING TO BEND STEEL SHALL BE ALLOWED WITHOUT ENGINEER'S APPROVAL.
-DO NOT CUT ANCHOR BOLTS AFTER INSTALLATION OF POLE
-AFTER INSTALLATION, ALL EXPOSED STEEL SHALL BE PAINTED WITH AN ENAMEL PAINT TO INHIBIT CORROSION.
-ANY FIELD WELDING SHALL FIRST BE VERIFIED BY ENGINEER AND PERFORMED IN ACCORDANCE WITH AWS D1.1.

-REFER TO SIGN MANUFACTURER DRAWINGS AND INSTRUCTIONS FOR ADDITIONAL INFORMATION.
-CONTRACTOR (INSTALLER) IS RESPONSIBLE FOR THE MEANS AND METHODS OF CONSTRUCTION IN REGARDS TO JOBSITE SAFETY.
-DETAILS AND STRUCTURAL MEMBERS NOT SHOWN DESIGNED BY OTHERS
-ANY MODIFICATIONS ARE TO BE VERIFIED BY AN ENGINEER

GATEWAY 150 MPH

NOTE:

-DESIGN CODES
IBC 2009
ASCE 7-05
ACI 318-08
AISC 13TH EDITION
AWS D1.1
WIND SPEED -- 150 MPH, 3 SEC GUST
-EXPOSURE C

-USE 3000 PSI CONCRETE COMPRESSIVE STRENGTH (f'c)
-PIER DEPTHS REQUIRED ARE MINIMUMS. ALL PIERS TO EXTEND TO FROST DEPTH AS DETERMINED BY LOCAL JURISDICTION.
-TOP OF PIERS SHALL BE SLOPED SUCH THAT MOISTURE CANNOT ACCUMULATE.
-ELECTRICAL CONTRACTOR TO PROVIDE INFORMATION ON CONDUIT AND ELECTRICAL REQUIREMENTS.
-MINIMUM ALLOWABLE LATERAL SOIL BEARING PRESSURE 100 PSF/FT OF DEPTH x2.
-TOP 6" OF SOIL NEGLECTED IN EMBEDMENT DEPTH CALCULATIONS (EMBEDMENT DEPTHS SHOWN ARE FROM GRADE)
-3" MIN. CONCRETE COVER FOR REINFORCEMENT
AXIAL LOAD -- 400 LBS
SHEAR FORCE -- 600 LBS
OVERTURNING MOMENT -- 2270 LB-FT

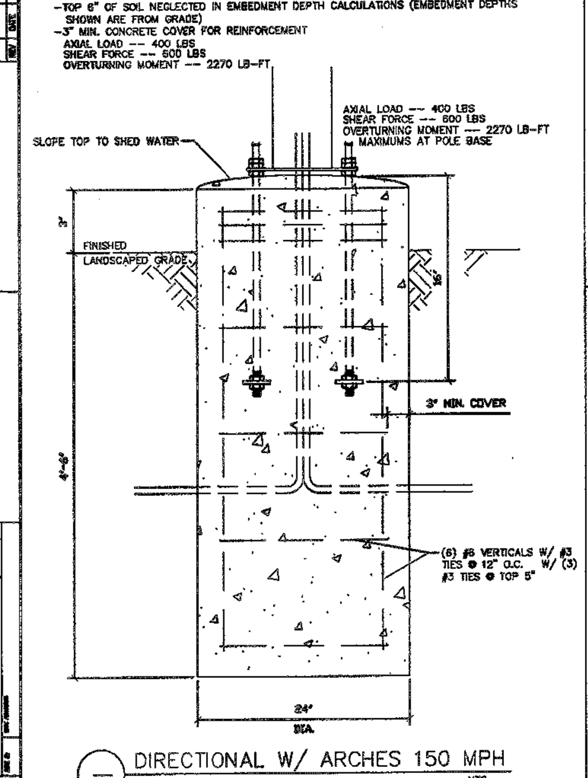

DIRECTIONAL W/ ARCHES 150 MPH
NTS

NOTES:

-TOP OF PIERS SHALL BE SLOPED SUCH THAT MOISTURE CANNOT ACCUMULATE.
-HOT DIPPED GALVANIZED BOLTS
-F1554 GRADE 36 ANCHOR BOLTS
-ANCHOR BOLTS TO BE SET IN ACCORDANCE WITH AISC CODE OF STANDARD PRACTICE
-ANCHOR RODS, NUTS, AND WASHERS SHALL BE SHIPPED AS AN ASSEMBLY FROM THE SIGN/LIGHTING MANUFACTURER
-DO NOT CUT ANCHOR BOLTS AFTER INSTALLATION OF POLE

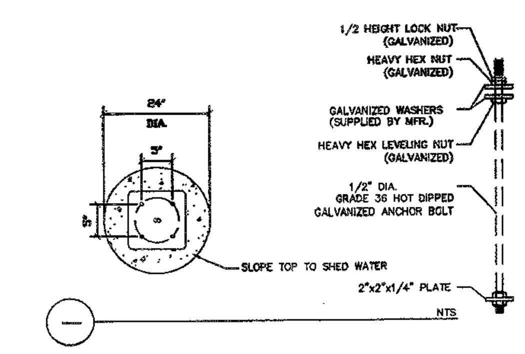

NOTES:

-TOP OF PIERS SHALL BE SLOPED SUCH THAT MOISTURE CANNOT ACCUMULATE.
-ANCHOR RODS, NUTS, AND WASHERS SHALL BE SHIPPED AS AN ASSEMBLY FROM THE SIGN/LIGHTING MANUFACTURER
-DO NOT CUT ANCHOR BOLTS AFTER INSTALLATION OF POLE

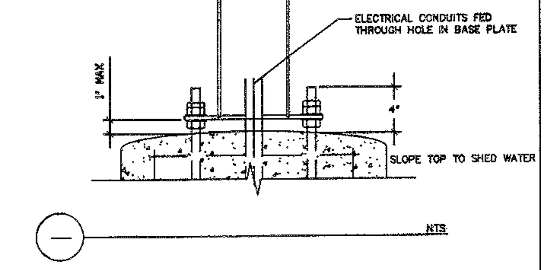

GENERAL NOTES

-THE FOLLOWING CODES WERE USED IN DESIGN:
-IBC 2009
-ASCE 7-05
-ACI 318-08
-AISC 13th EDITION
-AWS D1.1
-WIND SPEED 150 MPH, 3 SEC GUST
-EXPOSURE C
-DESIGN LOADS DERIVED FROM THESE CODES AND FORCES
-AXIAL – 400 LBS
-SHEAR – 600 LBS
-MOMENT – 2270 LB-FT

-ALL FOOTING EXCAVATIONS ARE TO BE CLEAR OF WATER AND FOREIGN MATTER BEFORE PLACING CONCRETE
-MINIMUM ALLOWABLE LATERAL SOIL BEARING PRESSURE OF 100PSF/FT (x2)
-SITE SOIL CONDITIONS TO BE CONFIRMED BY GEOTECHNICAL ENGINEER. IF ASSUMED SOIL CONDITIONS ARE NOT PRESENT, FOUNDATION SHALL BE DESIGNED BY A LICENSED STRUCTURAL ENGINEER TAKING INTO ACCOUNT ACTUAL SITE SOIL CONDITIONS.
-TOP 6" OF SOIL NEGLECTED IN EMBEDMENT DEPTH CALCULATIONS (EMBEDMENT DEPTHS SHOWN ARE FROM GRADE)

-ELECTRICAL CONTRACTOR TO PROVIDE INFORMATION ON CONDUIT AND ELECTRICAL REQUIREMENTS.

CONCRETE:

-ALL FOOTINGS SHALL BEAR ON FIRM UNDISTURBED RESIDUAL SOIL AND/OR ENGINEERED EARTH FILL COMPACTED TO 98% OF ITS MAXIMUM DRY DENSITY AS PER ASTM D 698-70 (STANDARD PROCTOR) UNLESS NOTED OTHERWISE.
-ALL PIERS TO EXTEND TO FROST DEPTH AS DETERMINED BY LOCAL JURISDICTION.
-TOP OF PIERS SHALL BE SLOPED SUCH THAT MOISTURE CANNOT ACCUMULATE.
-MINIMUM CONCRETE STRENGTH (f'c) SHOULD CONFORM WITH MCDONALDS CAST-IN-PLACE CONCRETE SPECIFICATIONS SECTION 2.13-A
-USE OF ADMIXTURES SHALL CONFORM TO MCDONALDS CAST-IN-PLACE CONCRETE SPECIFICATION SECTION 2.6
-AIR ENTRAINMENT SHALL CONFORM WITH MCDONALDS CAST-IN-PLACE CONCRETE SPECIFICATION SECTIONS 2.6-A & 2.13-A
-WATER CONTENT RATIO SHALL CONFORM TO MCDONALDS CAST-IN-PLACE CONCRETE SPECIFICATIONS SECTION 2.13-A
-FOUNDATION CONCRETE TO BE TESTED PER MCDONALDS CAST-IN-PLACE CONCRETE SPECIFICATIONS SECTION 3.14
-PROVIDE A MINIMUM 3" OF CONCRETE COVER OVER ALL EMBEDDED STEEL.
-REINFORCEMENT PLACEMENT SHALL CONFORM TO MCDONALDS CAST-IN-PLACE CONCRETE SPECIFICATIONS SECTIONS 3.2 & 3.5.
-ANCHOR BOLTS TO BE SET IN ACCORDANCE WITH AISC CODE OF STANDARD PRACTICE
-DO NOT PLACE POLES ON CONCRETE UNTIL CONCRETE HAS CURED PER MCDONALDS CAST-IN-PLACE CONCRETE SPECIFICATION, SECTION 3.11-E.

STEEL:

-STEEL PIPE SECTION: ASTM A53 OR A252 TYPE E GRADE B (Fy = 35ksi)
-HSS ROUND SECTION: ASTM A500 GRADE B (Fy = 42ksi)
-HSS SQUARE/RECTANGULAR SECTIONS: ASTM A500 GRADE B (Fy = 46ksi)
-CONNECTION BOLTS A325
-STEEL ANGLES, CHANNELS, STRUCTURAL SHAPES AND PLATES: ASTM A36
-REINFORCEMENT: GRADE 60
-NUTS: A563DH OR A194-2H
-WASHERS: A36
-USE HOT DIPPED GALVANIZED BOLTS AND FASTENERS
-ANCHOR RODS, NUTS, AND WASHERS SHALL BE SHIPPED AS AN ASSEMBLY FROM THE SIGN/LIGHTING MANUFACTURER
-NO FIELD HEATING TO BEND STEEL SHALL BE ALLOWED WITHOUT ENGINEER'S APPROVAL.
-DO NOT CUT ANCHOR BOLTS AFTER INSTALLATION OF POLE
-AFTER INSTALLATION, ALL EXPOSED STEEL SHALL BE PAINTED WITH AN ENAMEL PAINT TO INHIBIT CORROSION.
-ANY FIELD WELDING SHALL FIRST BE VERIFIED BY ENGINEER AND PERFORMED IN ACCORDANCE WITH AWS D1.1.

-REFER TO SIGN MANUFACTURER DRAWINGS AND INSTRUCTIONS FOR ADDITIONAL INFORMATION.
-CONTRACTOR (INSTALLER) IS RESPONSIBLE FOR THE MEANS AND METHODS OF CONSTRUCTION IN REGARDS TO JOBSITE SAFETY.
-DETAILS AND STRUCTURAL MEMBERS NOT SHOWN DESIGNED BY OTHERS
-ANY MODIFICATIONS ARE TO BE VERIFIED BY AN ENGINEER

DIRECTIONAL W/ARCHES 150 MPH

NOTE:

-DESIGN CODES
IBC 2009
ASCE 7-05
ACI 318-08
AISC 13TH EDITION
AWS D1.1
WIND SPEED -- 150 MPH, 3 SEC GUST
-EXPOSURE C

-USE 3000 PSI CONCRETE COMPRESSIVE STRENGTH (f'c)
-PIER DEPTHS REQUIRED ARE MINIMUMS. ALL PIERS TO EXTEND TO FROST DEPTH AS DETERMINED BY LOCAL JURISDICTION.
-TOP OF PIERS SHALL BE SLOPED SUCH THAT MOISTURE CANNOT ACCUMULATE.
-ELECTRICAL CONTRACTOR TO PROVIDE INFORMATION ON CONDUIT AND ELECTRICAL REQUIREMENTS.
-MINIMUM ALLOWABLE LATERAL SOIL BEARING PRESSURE 100 PSF/FT OF DEPTH x2.
-TOP 6" OF SOIL NEGLECTED IN EMBEDMENT DEPTH CALCULATIONS (EMBEDMENT DEPTHS SHOWN ARE FROM GRADE)
-3" MIN. CONCRETE COVER FOR REINFORCEMENT
-DESIGN LOADS DERIVED FROM THESE CODES AND FORCES
AXIAL LOAD -- 300 LBS
SHEAR FORCE -- 500 LBS
OVERTURNING MOMENT -- 1350 LB-FT

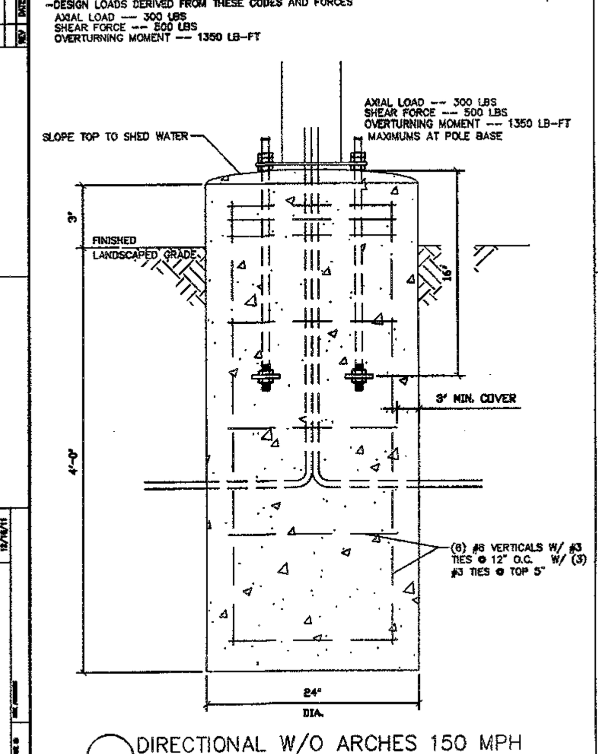

DIRECTIONAL W/O ARCHES 150 MPH
NTS

NOTES:

-TOP OF PIERS SHALL BE SLOPED SUCH THAT MOISTURE CANNOT ACCUMULATE.
-HOT DIPPED GALVANIZED BOLTS
-F1554 GRADE 36 ANCHOR BOLTS
-ANCHOR BOLTS TO BE SET IN ACCORDANCE WITH AISC CODE OF STANDARD PRACTICE
-ANCHOR RODS, NUTS, AND WASHERS SHALL BE SHIPPED AS AN ASSEMBLY FROM THE SIGN/LIGHTING MANUFACTURER
-DO NOT CUT ANCHOR BOLTS AFTER INSTALLATION OF POLE

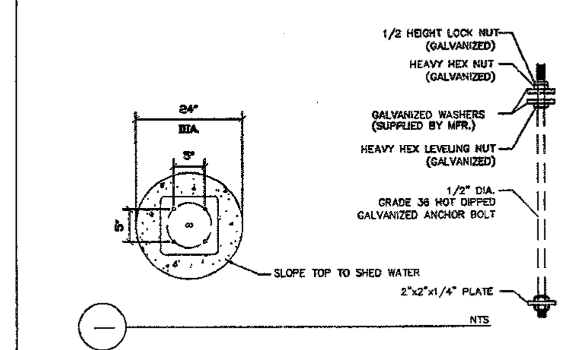

NOTES:

-TOP OF PIERS SHALL BE SLOPED SUCH THAT MOISTURE CANNOT ACCUMULATE.
-ANCHOR RODS, NUTS, AND WASHERS SHALL BE SHIPPED AS AN ASSEMBLY FROM THE SIGN/LIGHTING MANUFACTURER
-DO NOT CUT ANCHOR BOLTS AFTER INSTALLATION OF POLE

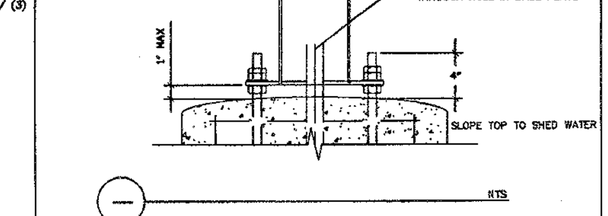

GENERAL NOTES

-THE FOLLOWING CODES WERE USED IN DESIGN:
-IBC 2009
-ASCE 7-05
-ACI 318-08
-AISC 13th EDITION
-AWS D1.1
-WIND SPEED 150 MPH, 3 SEC GUST
-EXPOSURE C
-DESIGN LOADS DERIVED FROM THESE CODES AND FORCES
-AXIAL – 300 LBS
-SHEAR – 500 LBS
-MOMENT – 1350 LB-FT

-ALL FOOTING EXCAVATIONS ARE TO BE CLEAR OF WATER AND FOREIGN MATTER BEFORE PLACING CONCRETE
-MINIMUM ALLOWABLE LATERAL SOIL BEARING PRESSURE OF 100PSF/FT (x2)
-SITE SOIL CONDITIONS TO BE CONFIRMED BY GEOTECHNICAL ENGINEER. IF ASSUMED SOIL CONDITIONS ARE NOT PRESENT, FOUNDATION SHALL BE DESIGNED BY A LICENSED STRUCTURAL ENGINEER TAKING INTO ACCOUNT ACTUAL SITE SOIL CONDITIONS.
-TOP 6" OF SOIL NEGLECTED IN EMBEDMENT DEPTH CALCULATIONS (EMBEDMENT DEPTHS SHOWN ARE FROM GRADE)

-ELECTRICAL CONTRACTOR TO PROVIDE INFORMATION ON CONDUIT AND ELECTRICAL REQUIREMENTS.

CONCRETE:

-ALL FOOTINGS SHALL BEAR ON FIRM UNDISTURBED RESIDUAL SOIL AND/OR ENGINEERED EARTH FILL COMPACTED TO 98% OF ITS MAXIMUM DRY DENSITY AS PER ASTM D 698-70 (STANDARD PROCTOR) UNLESS NOTED OTHERWISE.
-ALL PIERS TO EXTEND TO FROST DEPTH AS DETERMINED BY LOCAL JURISDICTION.
-TOP OF PIERS SHALL BE SLOPED SUCH THAT MOISTURE CANNOT ACCUMULATE.
-MINIMUM CONCRETE STRENGTH (f'c) SHOULD CONFORM WITH MCDONALDS CAST-IN-PLACE CONCRETE SPECIFICATIONS SECTION 2.13-A
-USE OF ADMIXTURES SHALL CONFORM TO MCDONALDS CAST-IN-PLACE CONCRETE SPECIFICATION SECTION 2.6
-AIR ENTRAINMENT SHALL CONFORM WITH MCDONALDS CAST-IN-PLACE CONCRETE SPECIFICATION SECTIONS 2.6-A & 2.13-A
-WATER CONTENT RATIO SHALL CONFORM TO MCDONALDS CAST-IN-PLACE CONCRETE SPECIFICATIONS SECTION 2.13-A
-FOUNDATION CONCRETE TO BE TESTED PER MCDONALDS CAST-IN-PLACE CONCRETE SPECIFICATIONS SECTION 3.14
-PROVIDE A MINIMUM 3" OF CONCRETE COVER OVER ALL EMBEDDED STEEL.
-REINFORCEMENT PLACEMENT SHALL CONFORM TO MCDONALDS CAST-IN-PLACE CONCRETE SPECIFICATIONS SECTIONS 3.2 & 3.5.
-ANCHOR BOLTS TO BE SET IN ACCORDANCE WITH AISC CODE OF STANDARD PRACTICE
-DO NOT PLACE POLES ON CONCRETE UNTIL CONCRETE HAS CURED PER MCDONALDS CAST-IN-PLACE CONCRETE SPECIFICATION, SECTION 3.11-E.

STEEL:

-STEEL PIPE SECTION: ASTM A53 OR A252 TYPE E GRADE B (Fy = 35ksi)
-HSS ROUND SECTION: ASTM A500 GRADE B (Fy = 42ksi)
-HSS SQUARE/RECTANGULAR SECTIONS: ASTM A500 GRADE B (Fy = 46ksi)
-CONNECTION BOLTS A325
-STEEL ANGLES, CHANNELS, STRUCTURAL SHAPES AND PLATES: ASTM A36
-REINFORCEMENT: GRADE 60
-NUTS: A563DH OR A194-2H
-WASHERS: A36
-USE HOT DIPPED GALVANIZED BOLTS AND FASTENERS
-ANCHOR RODS, NUTS, AND WASHERS SHALL BE SHIPPED AS AN ASSEMBLY FROM THE SIGN/LIGHTING MANUFACTURER
-NO FIELD HEATING TO BEND STEEL SHALL BE ALLOWED WITHOUT ENGINEER'S APPROVAL.
-DO NOT CUT ANCHOR BOLTS AFTER INSTALLATION OF POLE
-AFTER INSTALLATION, ALL EXPOSED STEEL SHALL BE PAINTED WITH AN ENAMEL PAINT TO INHIBIT CORROSION.
-ANY FIELD WELDING SHALL FIRST BE VERIFIED BY ENGINEER AND PERFORMED IN ACCORDANCE WITH AWS D1.1.

-REFER TO SIGN MANUFACTURER DRAWINGS AND INSTRUCTIONS FOR ADDITIONAL INFORMATION.
-CONTRACTOR (INSTALLER) IS RESPONSIBLE FOR THE MEANS AND METHODS OF CONSTRUCTION IN REGARDS TO JOBSITE SAFETY.
-DETAILS AND STRUCTURAL MEMBERS NOT SHOWN DESIGNED BY OTHERS
-ANY MODIFICATIONS ARE TO BE VERIFIED BY AN ENGINEER

DIRECTIONAL W/O ARCHES 150 MPH

NOTE:

-DESIGN CODES
IBC 2009
ASCE 7-05
ACI 318-08
AISC 13TH EDITION
AWS D1.1
WIND SPEED -- 150 MPH, 3 SEC GUST
-EXPOSURE C

-USE 3000 PSI CONCRETE COMPRESSIVE STRENGTH (f'c)
-PIER DEPTHS REQUIRED ARE MINIMUMS. ALL PIERS TO EXTEND TO FROST DEPTH AS DETERMINED BY LOCAL JURISDICTION.
-TOP OF PIERS SHALL BE SLOPED SUCH THAT MOISTURE CANNOT ACCUMULATE.
-ELECTRICAL CONTRACTOR TO PROVIDE INFORMATION ON CONDUIT AND ELECTRICAL REQUIREMENTS.
-MINIMUM ALLOWABLE LATERAL SOIL BEARING PRESSURE 100 PSF/FT OF DEPTH x2.
-TOP 6" OF SOIL NEGLECTED IN EMBEDMENT DEPTH CALCULATIONS (EMBEDMENT DEPTHS SHOWN ARE FROM GRADE)
-3" MIN. CONCRETE COVER FOR REINFORCEMENT
-DESIGN LOADS DERIVED FROM THESE CODES AND FORCES
AXIAL LOAD -- 1560 LBS
SHEAR FORCE -- 2800 LBS
OVERTURNING MOMENT -- 15,800 LB-FT

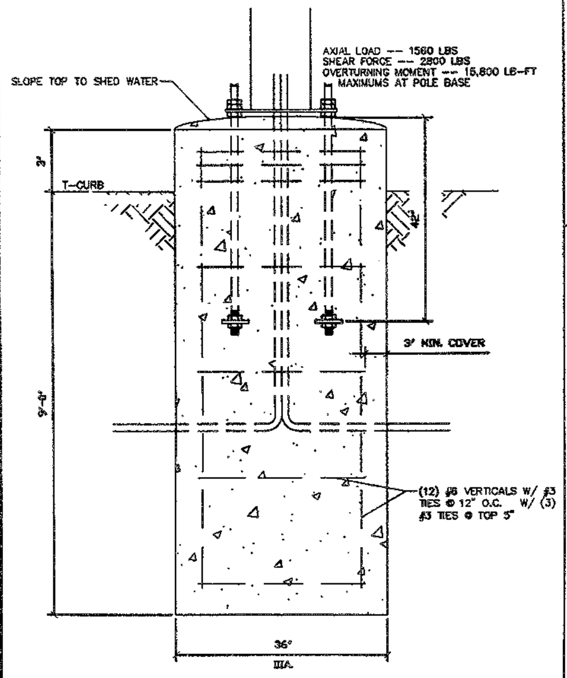

ORDER HERE CANOPY 150 MPH
NTS

NOTES:

-TOP OF PIERS SHALL BE SLOPED SUCH THAT MOISTURE CANNOT ACCUMULATE.
-HOT DIPPED GALVANIZED BOLTS
-F1554 GRADE 36 ANCHOR BOLTS
-ANCHOR BOLTS TO BE SET IN ACCORDANCE WITH AISC CODE OF STANDARD PRACTICE
-ANCHOR RODS, NUTS, AND WASHERS SHALL BE SHIPPED AS AN ASSEMBLY FROM THE SIGN/LIGHTING MANUFACTURER
-DO NOT CUT ANCHOR BOLTS AFTER INSTALLATION OF POLE

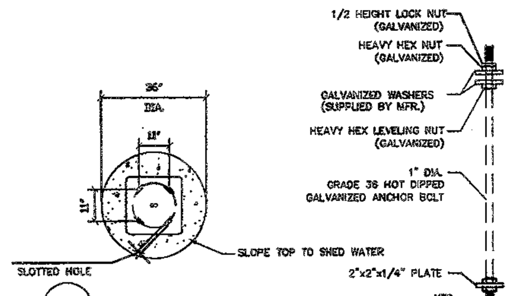

NOTES:

-TOP OF PIERS SHALL BE SLOPED SUCH THAT MOISTURE CANNOT ACCUMULATE.
-ANCHOR RODS, NUTS, AND WASHERS SHALL BE SHIPPED AS AN ASSEMBLY FROM THE SIGN/LIGHTING MANUFACTURER
-DO NOT CUT ANCHOR BOLTS AFTER INSTALLATION OF POLE

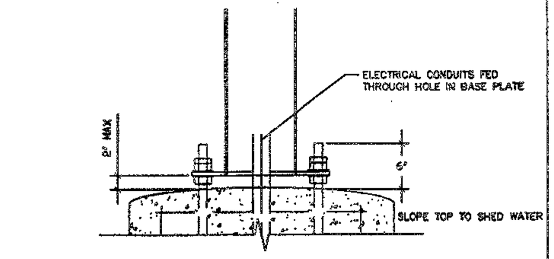

GENERAL NOTES

-THE FOLLOWING CODES WERE USED IN DESIGN:
-IBC 2009
-ASCE 7-05
-ACI 318-08
-AISC 13th EDITION
-AWS D1.1
-WIND SPEED 150 MPH, 3 SEC GUST
-EXPOSURE C
-DESIGN LOADS DERIVED FROM THESE CODES AND FORCES
-AXIAL – 1560 LBS
-SHEAR – 2800 LBS
-MOMENT – 15,800 LB-FT

-ALL FOOTING EXCAVATIONS ARE TO BE CLEAR OF WATER AND FOREIGN MATTER BEFORE PLACING CONCRETE
-MINIMUM ALLOWABLE LATERAL SOIL BEARING PRESSURE OF 100PSF/FT (x2)
-SITE SOIL CONDITIONS TO BE CONFIRMED BY GEOTECHNICAL ENGINEER. IF ASSUMED SOIL CONDITIONS ARE NOT PRESENT, FOUNDATION SHALL BE DESIGNED BY A LICENSED STRUCTURAL ENGINEER TAKING INTO ACCOUNT ACTUAL SITE SOIL CONDITIONS.
-TOP 6" OF SOIL NEGLECTED IN EMBEDMENT DEPTH CALCULATIONS (EMBEDMENT DEPTHS SHOWN ARE FROM GRADE)

-ELECTRICAL CONTRACTOR TO PROVIDE INFORMATION ON CONDUIT AND ELECTRICAL REQUIREMENTS.

CONCRETE:

-ALL FOOTINGS SHALL BEAR ON FIRM UNDISTURBED RESIDUAL SOIL AND/OR ENGINEERED EARTH FILL COMPACTED TO 98% OF ITS MAXIMUM DRY DENSITY AS PER ASTM D 698-70 (STANDARD PROCTOR) UNLESS NOTED OTHERWISE.
-ALL PIERS TO EXTEND TO FROST DEPTH AS DETERMINED BY LOCAL JURISDICTION.
-TOP OF PIERS SHALL BE SLOPED SUCH THAT MOISTURE CANNOT ACCUMULATE.
-MINIMUM CONCRETE STRENGTH (f'c) SHOULD CONFORM WITH MCDONALDS CAST-IN-PLACE CONCRETE SPECIFICATIONS SECTION 2.13-A
-USE OF ADMIXTURES SHALL CONFORM TO MCDONALDS CAST-IN-PLACE CONCRETE SPECIFICATION SECTION 2.6
-AIR ENTRAINMENT SHALL CONFORM WITH MCDONALDS CAST-IN-PLACE CONCRETE SPECIFICATION SECTIONS 2.6-A & 2.13-A
-WATER CONTENT RATIO SHALL CONFORM TO MCDONALDS CAST-IN-PLACE CONCRETE SPECIFICATIONS SECTION 2.13-A
-FOUNDATION CONCRETE TO BE TESTED PER MCDONALDS CAST-IN-PLACE CONCRETE SPECIFICATIONS SECTION 3.14
-PROVIDE A MINIMUM 3" OF CONCRETE COVER OVER ALL EMBEDDED STEEL.
-REINFORCEMENT PLACEMENT SHALL CONFORM TO MCDONALDS CAST-IN-PLACE CONCRETE SPECIFICATIONS SECTIONS 3.2 & 3.5.
-ANCHOR BOLTS TO BE SET IN ACCORDANCE WITH AISC CODE OF STANDARD PRACTICE
-DO NOT PLACE POLES ON CONCRETE UNTIL CONCRETE HAS CURED PER MCDONALDS CAST-IN-PLACE CONCRETE SPECIFICATION, SECTION 3.11-E.

STEEL:

-STEEL PIPE SECTION: ASTM A53 OR A252 TYPE E GRADE B (Fy = 35ksi)
-HSS ROUND SECTION: ASTM A500 GRADE B (Fy = 42ksi)
-HSS SQUARE/RECTANGULAR SECTIONS: ASTM A500 GRADE B (Fy = 46ksi)
-CONNECTION BOLTS A325
-STEEL ANGLES, CHANNELS, STRUCTURAL SHAPES AND PLATES: ASTM A36
-REINFORCEMENT: GRADE 60
-NUTS: A563DH OR A194-2H
-WASHERS: A36
-USE HOT DIPPED GALVANIZED BOLTS AND FASTENERS
-ANCHOR RODS, NUTS, AND WASHERS SHALL BE SHIPPED AS AN ASSEMBLY FROM THE SIGN/LIGHTING MANUFACTURER
-NO FIELD HEATING TO BEND STEEL SHALL BE ALLOWED WITHOUT ENGINEER'S APPROVAL.
-DO NOT CUT ANCHOR BOLTS AFTER INSTALLATION OF POLE
-AFTER INSTALLATION, ALL EXPOSED STEEL SHALL BE PAINTED WITH AN ENAMEL PAINT TO INHIBIT CORROSION.
-ANY FIELD WELDING SHALL FIRST BE VERIFIED BY ENGINEER AND PERFORMED IN ACCORDANCE WITH AWS D1.1.

-REFER TO SIGN MANUFACTURER DRAWINGS AND INSTRUCTIONS FOR ADDITIONAL INFORMATION.
-CONTRACTOR (INSTALLER) IS RESPONSIBLE FOR THE MEANS AND METHODS OF CONSTRUCTION IN REGARDS TO JOBSITE SAFETY.
-DETAILS AND STRUCTURAL MEMBERS NOT SHOWN DESIGNED BY OTHERS
-ANY MODIFICATIONS ARE TO BE VERIFIED BY AN ENGINEER

ORDER HERE CANOPY 150 MPH

NOTE:

-DESIGN CODES
IBC 2009
ASCE 7-05
ACI 318-08
AISC 13TH EDITION
AWS D1.1
WIND SPEED -- 150 MPH, 3 SEC GUST
-EXPOSURE C

-USE 3000 PSI CONCRETE COMPRESSIVE STRENGTH (f'c)
-PIER DEPTHS REQUIRED ARE MINIMUMS. ALL PIERS TO EXTEND TO FROST DEPTH AS DETERMINED BY LOCAL JURISDICTION.
-TOP OF PIERS SHALL BE SLOPED SUCH THAT MOISTURE CANNOT ACCUMULATE.
-ELECTRICAL CONTRACTOR TO PROVIDE INFORMATION ON CONDUIT AND ELECTRICAL REQUIREMENTS.
-MINIMUM ALLOWABLE LATERAL SOIL BEARING PRESSURE 100 PSF/FT OF DEPTH x2.
-TOP 6" OF SOIL NEGLECTED IN EMBEDMENT DEPTH CALCULATIONS (EMBEDMENT DEPTHS SHOWN ARE FROM GRADE)
-3" MIN. CONCRETE COVER FOR REINFORCEMENT
-DESIGN LOADS DERIVED FROM THESE CODES AND FORCES
AXIAL LOAD -- 1000 LBS
SHEAR FORCE -- 1000 LBS
OVERTURNING MOMENT -- 3800 LB-FT

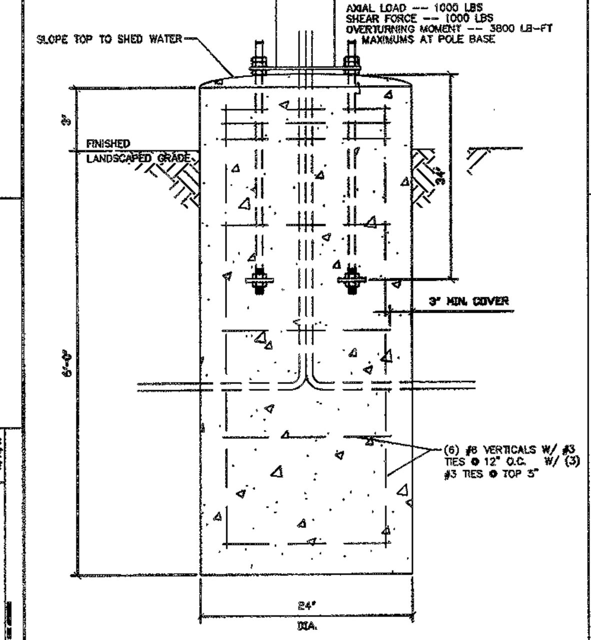

PRE-SELL 150 MPH
NTS

NOTES:

-TOP OF PIERS SHALL BE SLOPED SUCH THAT MOISTURE CANNOT ACCUMULATE.
-HOT DIPPED GALVANIZED BOLTS
-F1554 GRADE 36 ANCHOR BOLTS
-ANCHOR BOLTS TO BE SET IN ACCORDANCE WITH AISC CODE OF STANDARD PRACTICE
-ANCHOR RODS, NUTS, AND WASHERS SHALL BE SHIPPED AS AN ASSEMBLY FROM THE SIGN/LIGHTING MANUFACTURER
-DO NOT CUT ANCHOR BOLTS AFTER INSTALLATION OF POLE

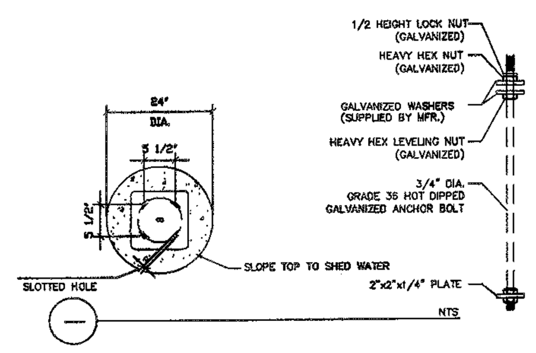

NOTES:

-TOP OF PIERS SHALL BE SLOPED SUCH THAT MOISTURE CANNOT ACCUMULATE.
-ANCHOR RODS, NUTS, AND WASHERS SHALL BE SHIPPED AS AN ASSEMBLY FROM THE SIGN/LIGHTING MANUFACTURER
-DO NOT CUT ANCHOR BOLTS AFTER INSTALLATION OF POLE

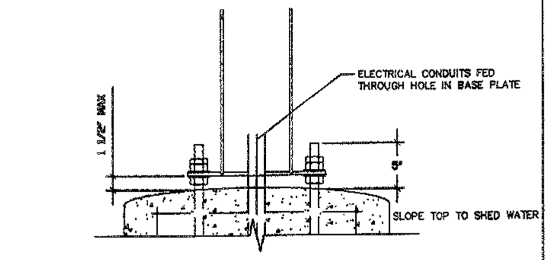

GENERAL NOTES

-THE FOLLOWING CODES WERE USED IN DESIGN:
-IBC 2009
-ASCE 7-05
-ACI 318-08
-AISC 13th EDITION
-AWS D1.1
-WIND SPEED 150 MPH, 3 SEC GUST
-EXPOSURE C
-DESIGN LOADS DERIVED FROM THESE CODES AND FORCES
-AXIAL – 1000 LBS
-SHEAR – 1000 LBS
-MOMENT – 3800 LB-FT

-ALL FOOTING EXCAVATIONS ARE TO BE CLEAR OF WATER AND FOREIGN MATTER BEFORE PLACING CONCRETE
-MINIMUM ALLOWABLE LATERAL SOIL BEARING PRESSURE OF 100PSF/FT (x2)
-SITE SOIL CONDITIONS TO BE CONFIRMED BY GEOTECHNICAL ENGINEER. IF ASSUMED SOIL CONDITIONS ARE NOT PRESENT, FOUNDATION SHALL BE DESIGNED BY A LICENSED STRUCTURAL ENGINEER TAKING INTO ACCOUNT ACTUAL SITE SOIL CONDITIONS.
-TOP 6" OF SOIL NEGLECTED IN EMBEDMENT DEPTH CALCULATIONS (EMBEDMENT DEPTHS SHOWN ARE FROM GRADE)

-ELECTRICAL CONTRACTOR TO PROVIDE INFORMATION ON CONDUIT AND ELECTRICAL REQUIREMENTS.

CONCRETE:

-ALL FOOTINGS SHALL BEAR ON FIRM UNDISTURBED RESIDUAL SOIL AND/OR ENGINEERED EARTH FILL COMPACTED TO 98% OF ITS MAXIMUM DRY DENSITY AS PER ASTM D 698-70 (STANDARD PROCTOR) UNLESS NOTED OTHERWISE.
-ALL PIERS TO EXTEND TO FROST DEPTH AS DETERMINED BY LOCAL JURISDICTION.
-TOP OF PIERS SHALL BE SLOPED SUCH THAT MOISTURE CANNOT ACCUMULATE.
-MINIMUM CONCRETE STRENGTH (f'c) SHOULD CONFORM WITH MCDONALDS CAST-IN-PLACE CONCRETE SPECIFICATIONS SECTION 2.13-A
-USE OF ADMIXTURES SHALL CONFORM TO MCDONALDS CAST-IN-PLACE CONCRETE SPECIFICATION SECTION 2.6
-AIR ENTRAINMENT SHALL CONFORM WITH MCDONALDS CAST-IN-PLACE CONCRETE SPECIFICATION SECTIONS 2.6-A & 2.13-A
-WATER CONTENT RATIO SHALL CONFORM TO MCDONALDS CAST-IN-PLACE CONCRETE SPECIFICATIONS SECTION 2.13-A
-FOUNDATION CONCRETE TO BE TESTED PER MCDONALDS CAST-IN-PLACE CONCRETE SPECIFICATIONS SECTION 3.14
-PROVIDE A MINIMUM 3" OF CONCRETE COVER OVER ALL EMBEDDED STEEL.
-REINFORCEMENT PLACEMENT SHALL CONFORM TO MCDONALDS CAST-IN-PLACE CONCRETE SPECIFICATIONS SECTIONS 3.2 & 3.5.
-ANCHOR BOLTS TO BE SET IN ACCORDANCE WITH AISC CODE OF STANDARD PRACTICE
-DO NOT PLACE POLES ON CONCRETE UNTIL CONCRETE HAS CURED PER MCDONALDS CAST-IN-PLACE CONCRETE SPECIFICATION, SECTION 3.11-E.

STEEL:

-STEEL PIPE SECTION: ASTM A53 OR A252 TYPE E GRADE B (Fy = 35ksi)
-HSS ROUND SECTION: ASTM A500 GRADE B (Fy = 42ksi)
-HSS SQUARE/RECTANGULAR SECTIONS: ASTM A500 GRADE B (Fy = 46ksi)
-CONNECTION BOLTS A325
-STEEL ANGLES, CHANNELS, STRUCTURAL SHAPES AND PLATES: ASTM A36
-REINFORCEMENT: GRADE 60
-NUTS: A563DH OR A194-2H
-WASHERS: A36
-USE HOT DIPPED GALVANIZED BOLTS AND FASTENERS
-ANCHOR RODS, NUTS, AND WASHERS SHALL BE SHIPPED AS AN ASSEMBLY FROM THE SIGN/LIGHTING MANUFACTURER
-NO FIELD HEATING TO BEND STEEL SHALL BE ALLOWED WITHOUT ENGINEER'S APPROVAL.
-DO NOT CUT ANCHOR BOLTS AFTER INSTALLATION OF POLE
-AFTER INSTALLATION, ALL EXPOSED STEEL SHALL BE PAINTED WITH AN ENAMEL PAINT TO INHIBIT CORROSION.
-ANY FIELD WELDING SHALL FIRST BE VERIFIED BY ENGINEER AND PERFORMED IN ACCORDANCE WITH AWS D1.1.

-REFER TO SIGN MANUFACTURER DRAWINGS AND INSTRUCTIONS FOR ADDITIONAL INFORMATION.
-CONTRACTOR (INSTALLER) IS RESPONSIBLE FOR THE MEANS AND METHODS OF CONSTRUCTION IN REGARDS TO JOBSITE SAFETY.
-DETAILS AND STRUCTURAL MEMBERS NOT SHOWN DESIGNED BY OTHERS
-ANY MODIFICATIONS ARE TO BE VERIFIED BY AN ENGINEER

PRE-SELL 150 MPH

NOTE:
-DESIGN CODES
IBC 2009
ASCE 7-05
ACI 318-08
AISC 13th EDITION
AWS D1.1
NAAMM 1001-07
-DESIGN LOADS ARE BASED ON THE WORST CASE OF EITHER OF THE FOLLOWING CONDITIONS:
A. 90MPH 3-SEC GUST (EXPOSURE C) ACTING ON POLE AND FLAG
B. 120MPH 3-SEC GUST (EXPOSURE C) ACTING ON POLE ONLY
-DESIGN LOADS DERIVED FROM THESE CODES AND FORCES (A, B)
-SHEAR – 637 LBS.
-MOMENT – 10,376 FT./LBS.
-USE CONCRETE WITH A 3000PSI MINIMUM COMPRESSIVE STRENGTH (f'c).
-PIER DEPTHS REQUIRED ARE MINIMUMS. ALL PIERS TO EXTEND TO FROST DEPTH AS DETERMINED BY LOCAL JURISDICTION.
-TOP OF PIERS SHALL BE SLOPED SUCH THAT MOISTURE CANNOT ACCUMULATE.
-ELECTRICAL CONTRACTOR TO PROVIDE INFORMATION ON CONDUIT AND ELECTRICAL REQUIREMENTS.
-MINIMUM ALLOWABLE LATERAL SOIL BEARING PRESSURE 100 PSF/FT OF DEPTH (x2)
-TOP 6" OF SOIL NEGLECTED IN EMBEDMENT DEPTH CALCULATIONS (EMBEDMENT DEPTHS SHOWN ARE FROM GRADE).
-INSTALL SAND AND POLE PER MANUFACTURERS INSTALLATION INSTRUCTIONS.
-SEAL SAND IN FOUNDATION WITH CAULK PER MANUFACTURERS GUIDELINES.

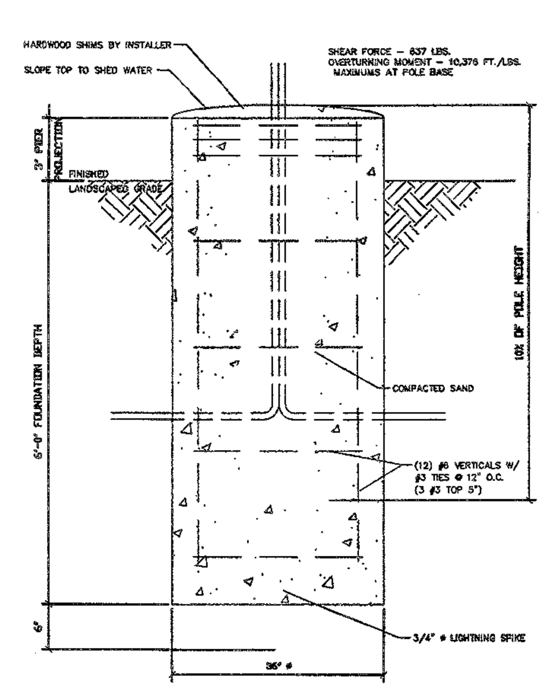

25' & 30' FLAG POLE FDN.
NTS

NOTES:
-TOP OF PIERS SHALL BE SLOPED SUCH THAT MOISTURE CANNOT ACCUMULATE.

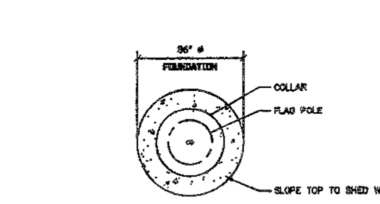

NOTES:
-TOP OF PIERS SHALL BE SLOPED SUCH THAT MOISTURE CANNOT ACCUMULATE.

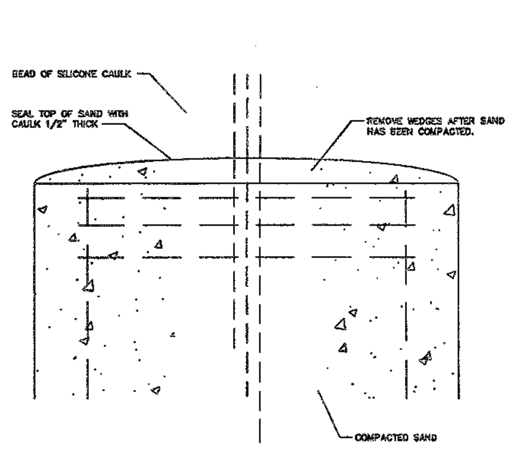

GEN. NOTES

-THE FOLLOWING CODES WERE USED IN DESIGN:
-IBC 2009
-ASCE 7-05
-ACI 318-08
-AISC 13th EDITION
-AWS D1.1
-NAAMM 1001-07
-DESIGN LOADS ARE BASED ON THE WORST CASE OF EITHER OF THE FOLLOWING CONDITIONS:
A. 90MPH 3-SEC GUST (EXPOSURE C) ACTING ON POLE AND FLAG
B. 120MPH 3-SEC GUST (EXPOSURE C) ACTING ON POLE ONLY
-DESIGN LOADS DERIVED FROM THESE CODES AND FORCES
-SHEAR – 637 LBS.
-MOMENT – 10,376 FT./LBS.

-ALL FOOTING EXCAVATIONS ARE TO BE CLEAR OF WATER AND FOREIGN MATTER BEFORE PLACING CONCRETE
-MINIMUM ALLOWABLE LATERAL SOIL BEARING PRESSURE OF 100PSF/FT (x2)
-SITE SOIL CONDITIONS TO BE CONFIRMED BY GEOTECHNICAL ENGINEER. IF ASSUMED SOIL CONDITIONS ARE NOT PRESENT, FOUNDATION SHALL BE DESIGNED BY A LICENSED STRUCTURAL ENGINEER TAKING INTO ACCOUNT ACTUAL SITE SOIL CONDITIONS.
-TOP 6" OF SOIL NEGLECTED IN EMBEDMENT DEPTH CALCULATIONS (EMBEDMENT DEPTHS SHOWN ARE FROM GRADE)

-ELECTRICAL CONTRACTOR TO PROVIDE INFORMATION ON CONDUIT AND ELECTRICAL REQUIREMENTS.

CONCRETE:

-ALL FOOTINGS SHALL BEAR ON FIRM UNDISTURBED RESIDUAL SOIL AND/OR ENGINEERED EARTH FILL COMPACTED TO 98% OF ITS MAXIMUM DRY DENSITY AS PER ASTM D 698-70 (STANDARD PROCTOR) UNLESS NOTED OTHERWISE.
-ALL PIERS TO EXTEND TO FROST DEPTH AS DETERMINED BY LOCAL JURISDICTION.
-TOP OF PIERS SHALL BE SLOPED SUCH THAT MOISTURE CANNOT ACCUMULATE.
-MINIMUM CONCRETE STRENGTH (f'c) SHOULD CONFORM WITH MCDONALDS CAST-IN-PLACE CONCRETE SPECIFICATIONS SECTION 2.13-A
-USE OF ADMIXTURES SHALL CONFORM TO MCDONALDS CAST-IN-PLACE CONCRETE SPECIFICATION SECTION 2.6
-AIR ENTRAINMENT SHALL CONFORM WITH MCDONALDS CAST-IN-PLACE CONCRETE SPECIFICATION SECTIONS 2.6-A & 2.13-A
-WATER CONTENT RATIO SHALL CONFORM TO MCDONALDS CAST-IN-PLACE CONCRETE SPECIFICATIONS SECTION 2.13-A
-FOUNDATION CONCRETE TO BE TESTED PER MCDONALDS CAST-IN-PLACE CONCRETE SPECIFICATIONS SECTION 3.14
-PROVIDE A MINIMUM 3" OF CONCRETE COVER OVER ALL EMBEDDED STEEL.
-REINFORCEMENT PLACEMENT SHALL CONFORM TO MCDONALDS CAST-IN-PLACE CONCRETE SPECIFICATIONS SECTIONS 3.2 & 3.5.
-ANCHOR BOLTS TO BE SET IN ACCORDANCE WITH AISC CODE OF STANDARD PRACTICE
-DO NOT PLACE POLES ON CONCRETE UNTIL CONCRETE HAS CURED PER MCDONALDS CAST-IN-PLACE CONCRETE SPECIFICATION, SECTION 3.11-E.

-FLAG SIZES SHALL NOT EXCEED THE FOLLOWING AREA LIMITATIONS:

-25'-0" POLE --> 5'-0" x 8'-0" FLAG
-30'-0" POLE --> 6'-0" x 10'-0" FLAG
-40'-0" POLE --> 8'-0" x 12'-0" FLAG
-50'-0" POLE --> 10'-0" X 15'-0" FLAG

-REFER TO FLAG MANUFACTURER DRAWINGS AND INSTRUCTIONS FOR ADDITIONAL INFORMATION INCLUDING INSTALLATION INSTRUCTIONS.
-CONTRACTOR (INSTALLER) IS RESPONSIBLE FOR THE MEANS AND METHODS OF CONSTRUCTION IN REGARDS TO JOBSITE SAFETY.
-DETAILS AND STRUCTURAL MEMBERS NOT SHOWN DESIGNED BY OTHERS
-ANY MODIFICATIONS ARE TO BE VERIFIED BY AN ENGINEER

NOTE:
-DESIGN CODES
IBC 2009
ASCE 7-05
ACI 318-08
AISC 13th EDITION
AWS D1.1
NAAMM 1001-07
-DESIGN LOADS ARE BASED ON THE WORST CASE OF EITHER OF THE FOLLOWING CONDITIONS:
A. 60MPH 3-SEC GUST (EXPOSURE C) ACTING ON POLE AND FLAG
B. 120MPH 3-SEC GUST (EXPOSURE C) ACTING ON POLE ONLY
-DESIGN LOADS DERIVED FROM THESE CODES AND FORCES (A, B)
-SHEAR – 637 LBS.
-MOMENT – 10,376 FT./LBS.
-USE CONCRETE WITH A 3000PSI MINIMUM COMPRESSIVE STRENGTH (f'c).
-PIER DEPTHS REQUIRED ARE MINIMUMS. ALL PIERS TO EXTEND TO FROST DEPTH AS DETERMINED BY LOCAL JURISDICTION.
-TOP OF PIERS SHALL BE SLOPED SUCH THAT MOISTURE CANNOT ACCUMULATE.
-ELECTRICAL CONTRACTOR TO PROVIDE INFORMATION ON CONDUIT AND ELECTRICAL REQUIREMENTS.
-MINIMUM ALLOWABLE LATERAL SOIL BEARING PRESSURE 100 PSF/FT OF DEPTH (x2)
-TOP 6" OF SOIL NEGLECTED IN EMBEDMENT DEPTH CALCULATIONS (EMBEDMENT DEPTHS SHOWN ARE FROM GRADE).
-INSTALL SAND AND POLE PER MANUFACTURERS INSTALLATION INSTRUCTIONS.
-SEAL SAND IN FOUNDATION WITH CAULK PER MANUFACTURERS GUIDELINES.

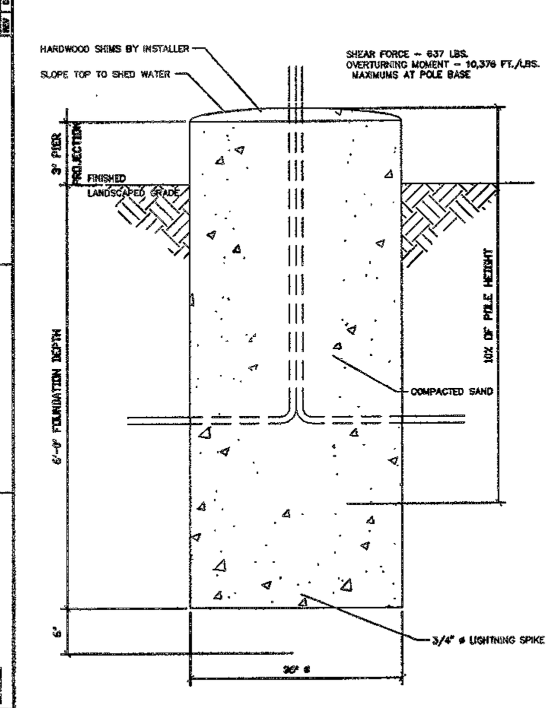

25' & 30' FLAG POLE FDN.
NTS

NOTES:
-TOP OF PIERS SHALL BE SLOPED SUCH THAT MOISTURE CANNOT ACCUMULATE.

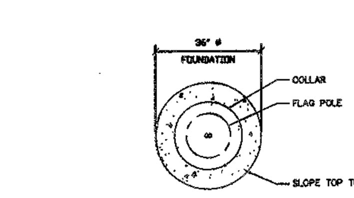

NOTES:
-TOP OF PIERS SHALL BE SLOPED SUCH THAT MOISTURE CANNOT ACCUMULATE.

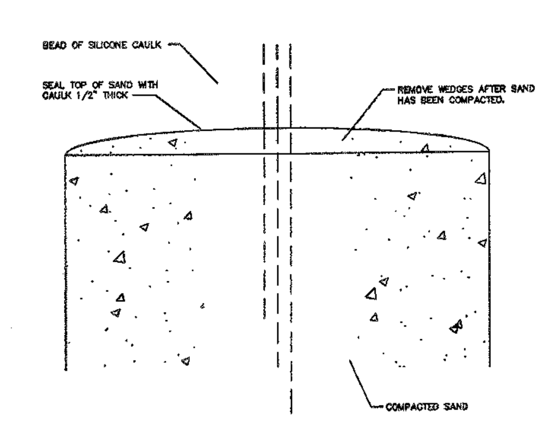

GEN. NOTES

-THE FOLLOWING CODES WERE USED IN DESIGN:
-IBC 2009
-ASCE 7-05
-ACI 318-08
-AISC 13th EDITION
-AWS D1.1
-NAAMM 1001-07
-DESIGN LOADS ARE BASED ON THE WORST CASE OF EITHER OF THE FOLLOWING CONDITIONS:
A. 90MPH 3-SEC GUST (EXPOSURE C) ACTING ON POLE AND FLAG
B. 120MPH 3-SEC GUST (EXPOSURE C) ACTING ON POLE ONLY
-DESIGN LOADS DERIVED FROM THESE CODES AND FORCES
-SHEAR – 637 LBS.
-MOMENT – 10,376 FT./LBS.

-ALL FOOTING EXCAVATIONS ARE TO BE CLEAR OF WATER AND FOREIGN MATTER BEFORE PLACING CONCRETE
-MINIMUM ALLOWABLE LATERAL SOIL BEARING PRESSURE OF 100PSF/FT (x2)
-SITE SOIL CONDITIONS TO BE CONFIRMED BY GEOTECHNICAL ENGINEER. IF ASSUMED SOIL CONDITIONS ARE NOT PRESENT, FOUNDATION SHALL BE DESIGNED BY A LICENSED STRUCTURAL ENGINEER TAKING INTO ACCOUNT ACTUAL SITE SOIL CONDITIONS.
-TOP 6" OF SOIL NEGLECTED IN EMBEDMENT DEPTH CALCULATIONS (EMBEDMENT DEPTHS SHOWN ARE FROM GRADE)

-ELECTRICAL CONTRACTOR TO PROVIDE INFORMATION ON CONDUIT AND ELECTRICAL REQUIREMENTS.

CONCRETE:

-ALL FOOTINGS SHALL BEAR ON FIRM UNDISTURBED RESIDUAL SOIL AND/OR ENGINEERED EARTH FILL COMPACTED TO 98% OF ITS MAXIMUM DRY DENSITY AS PER ASTM D 698-70 (STANDARD PROCTOR) UNLESS NOTED OTHERWISE.
-ALL PIERS TO EXTEND TO FROST DEPTH AS DETERMINED BY LOCAL JURISDICTION.
-TOP OF PIERS SHALL BE SLOPED SUCH THAT MOISTURE CANNOT ACCUMULATE.
-MINIMUM CONCRETE STRENGTH (f'c) SHOULD CONFORM WITH MCDONALDS CAST-IN-PLACE CONCRETE SPECIFICATIONS SECTION 2.13-A
-USE OF ADMIXTURES SHALL CONFORM TO MCDONALDS CAST-IN-PLACE CONCRETE SPECIFICATION SECTION 2.6
-AIR ENTRAINMENT SHALL CONFORM WITH MCDONALDS CAST-IN-PLACE CONCRETE SPECIFICATION SECTIONS 2.6-A & 2.13-A
-WATER CONTENT RATIO SHALL CONFORM TO MCDONALDS CAST-IN-PLACE CONCRETE SPECIFICATIONS SECTION 2.13-A
-FOUNDATION CONCRETE TO BE TESTED PER MCDONALDS CAST-IN-PLACE CONCRETE SPECIFICATIONS SECTION 3.14
-PROVIDE A MINIMUM 3" OF CONCRETE COVER OVER ALL EMBEDDED STEEL.
-REINFORCEMENT PLACEMENT SHALL CONFORM TO MCDONALDS CAST-IN-PLACE CONCRETE SPECIFICATIONS SECTIONS 3.2 & 3.5.
-ANCHOR BOLTS TO BE SET IN ACCORDANCE WITH AISC CODE OF STANDARD PRACTICE
-DO NOT PLACE POLES ON CONCRETE UNTIL CONCRETE HAS CURED PER MCDONALDS CAST-IN-PLACE CONCRETE SPECIFICATION, SECTION 3.11-E.

-FLAG SIZES SHALL NOT EXCEED THE FOLLOWING AREA LIMITATIONS:

-25'-0" POLE --> 5'-0" x 8'-0" FLAG
-30'-0" POLE --> 6'-0" x 10'-0" FLAG
-40'-0" POLE --> 8'-0" x 12'-0" FLAG
-50'-0" POLE --> 10'-0" X 15'-0" FLAG

-REFER TO FLAG MANUFACTURER DRAWINGS AND INSTRUCTIONS FOR ADDITIONAL INFORMATION INCLUDING INSTALLATION INSTRUCTIONS.
-CONTRACTOR (INSTALLER) IS RESPONSIBLE FOR THE MEANS AND METHODS OF CONSTRUCTION IN REGARDS TO JOBSITE SAFETY.
-DETAILS AND STRUCTURAL MEMBERS NOT SHOWN DESIGNED BY OTHERS
-ANY MODIFICATIONS ARE TO BE VERIFIED BY AN ENGINEER

REV	DATE	DESCRIPTION	BY	ISSUE/REF
1	12-12-12	PERMIT ISSUE	JWR	
2	1-16-13	CITY OF WILMINGTON COMMENTS	STH	

COMMERCIAL SITE DESIGN
8312 CREEDMOOR ROAD
RALEIGH, NORTH CAROLINA 27613
(919) 848-6121, FAX: (919) 848-7741
WWW.CSITEDESIGN.COM

McDonald's®

THESE PLANS AND SPECIFICATIONS ARE THE PROPERTY OF McDONALD'S CORPORATION AND SHALL NOT BE REPRODUCED WITHOUT THEIR WRITTEN PERMISSION.

OFFICE	RALEIGH REGION
ADDRESS	4601 SIX FORKS ROAD - SUITE 200 - RALEIGH, N.C. 27609

PLAN APPROVAL

	SIGNATURE (2 REQUIRED)	DATE
REGIONAL MGR.		
REGIONAL DEV. DIRECTOR		
REGIONAL CONSTRUCTION MGR.		
REGIONAL REAL ESTATE MGR.		
CO-SIGN SIGNATURES		
AREA CONSTRUCTION MGR.		
CONTRACTOR		

STATUS	DATE	BY
FINAL	-	-
PLAN CHECKED	-	-
AS-BUILT	-	-

PLAN SCALE: NOT TO SCALE

STREET ADDRESS 2543 CAROLINA BEACH ROAD	
CITY WILMINGTON	STATE NORTH CAROLINA
COUNTY NEW HANOVER	
TAX PARCEL NUMBER R06018-004-023-000	LOCATION CODE NUMBER 32-0062
CSD FILENAME: MCD1216-SD1	

2/1/13

P-0298

C-11
SD DETAILS
(150 MPH)

PLANTING SCHEDULE (SEE LANDSCAPE NOTE #12)

SYMBOL	KEY	NO.	BOTANICAL NAME	COMMON NAME	CALIPER	HEIGHT	ROOT	COMMENTS
	AR	2	ACER RUBRUM "OCTOBER GLORY"	RED MAPLE "OCTOBER GLORY"	3"	8'-10'	B&B	CANOPY TREE
	AB	7	ACER BUERGERANUM	TRIDENT MAPLE	3"	8'-10'	B&B	CANOPY TREE
	FP	1	FRAXINUS PENNSYLVANIA	GREEN ASH	3"	8'-10'	B&B	CANOPY TREE
	LI	5	LAGERSTROEMIA INDICA	CREPE MYRTLE	3"	8'-10'	B&B	MULTI-STEM TREE
	SB	30	SPIREA x BUMALDA "ANTHONY WATERER"	ANTHONY WATERER SPIREA	-	18"	3 GAL.	PARKING AREA SHRUB
	IV	63	ILEX VOMITORIA NANA	DWARF YAUPON HOLLY	-	36" MIN.	3 GAL.	SCREENING SHRUB
	RI	17	RHAPHIOLEPSIS INDICA	INDIAN HAWTHORNE	-	18"	3 GAL.	DRIVE-THRU SHRUB
	AG	18	ABELIA GRANDIFLORA	FLOWERING ABELIA	-	18"	3 GAL.	FOUNDATION SHRUB
	MC	14	MYRICA CERIFICA	WAX MYRTLE	-	18"	3 GAL.	PARKING AREA SHRUB
			AREA FOR STREET YARD REQUIREMENTS					
			ANNUALS					

LANDSCAPE CALCULATIONS

PERIMETER (ADJACENT TO SEPARATE PARKING LOT)
REQUIRED: ONE TREE PER 27 LF

EASTERN PROPERTY LINE
REQUIRED: 125 LF / 27 = 5 TREES
PROVIDED: 4 CRAPE MYRTLES, 1 RED MAPLE

STREET YARD LANDSCAPING
REQUIRED: 1 CANOPY OR 3 UNDERSTORY TREES AND 6 SHRUBS PER 600 SF OF STREETYARD

CAROLINA BEACH ROAD
182 LF - 38 LF DRIVEWAY = 144 LF X 25' AVERAGE = 3,600 SF / 600 = 6 TREES AND 36 SHRUBS REQUIRED

PROVIDED: 1 EXISTING PINE
2 RED MAPLE
1 TRIDENT MAPLE
2 CRAPE MYRTLE
34 DWARF YAUPON HOLLY
6 INDIAN HAWTHORN

SHIPYARD BOULEVARD
210 LF - 32 LF DRIVEWAY = 178 LF X 12.5' AVERAGE = 2,225 SF / 600 = 4 TREES AND 24 SHRUBS REQUIRED

PROVIDED: 4 EXISTING CRAPE MYRTLE
2 TRIDENT MAPLE
29 DWARF YAUPON HOLLY

INTERIOR LANDSCAPING
REQUIRED: 20% OF 6,959 SF (PARKING AREA) = 1,792 SF

PROVIDED: 13 LARGE TREES X 354 SF = 4,602 SF
3 SMALL TREES X 157 SF = 471 SF
TOTAL = 5,073 SF

FOUNDATION PLANTINGS

REQUIRED: 12% OF BUILDING FACE AREA
FRONT: 46' X 18' X 12% = 99 SF
FRONT: 100' X 18' X 12% = 216 SF
REAR: 46' X 18' X 12% = 99 SF
TOTAL = 414 SF

PROVIDED: 747 SF
18 FLOWERING ABELIA

NOTE:
IN SOME CASES THE MULCH IS ONLY A SPECIFIED DIAMETER, SEE PLANS AND SPECIFICATIONS FOR FURTHER COORDINATION OF MULCHING.

NOTE:
PRUNE SHRUB AS RECOMMENDED BY GROWER ONLY AFTER THE PLANT HAS BEEN WATERED INTO THE PLANTING SOIL.

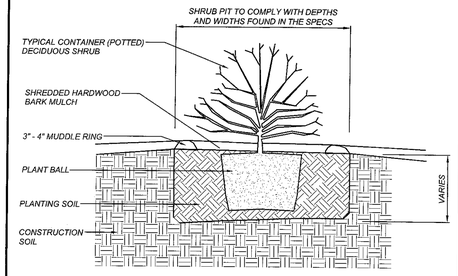

SHRUB PLANTING DETAIL

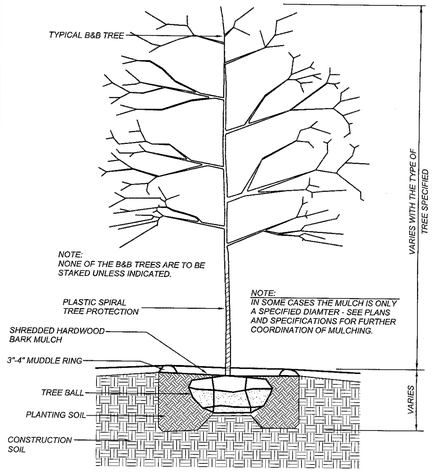

NOTES:
1. ALL TREES SHOULD BE PRUNED ONLY AFTER INSTALLATION AND WATERING IN THE TREE. PRUNE TO GROWERS SPECIFICATIONS.
2. ALL TREES SHALL COMPLY WITH THE AMERICAN STANDARDS FOR NURSERY STOCK INCLUDING TREE PIT DEPTH AND WIDTH.

TREE PLANTING DETAIL

PERMANENT SODDING IN NORTH CAROLINA

SPECIES:
HYBRID BERMUDAGRASS

SOIL PREPARATION:
APPLY LIME AT A RATE OF 100 LB PER 1,000 SF. APPLY FERTILIZER AT A RATE OF 25 LB PER 1,000 SF OF 10-10-10 IN FALL OR 5-10-10 IN SPRING.

SOD INSTALLATION:
1. PRIOR TO LAYING SOD, CLEAR SURFACE OF SOIL OF ALL TRASH AND DEBRIS. FILL ALL LOW SPOTS TO AVOID STANDING WATER.
2. PRIOR TO INSTALLATION, STORE ALL SOD IN SHADE AND MOISTEN TO MAINTAIN VIABILITY. DELIVERY AND INSTALLATION OF SOD SHOULD TAKE PLACE WITHIN A PERIOD OF 36 HOURS.
3. DURING SUMMER, LIGHTLY IRRIGATE SOIL IMMEDIATELY BEFORE LAYING SOD.
4. LAY FIRST ROW OF SOD IN A STRAIGHT LINE WITH SUBSEQUENT ROWS PLACED PARALLEL TO AND BUTTING TIGHTLY AGAINST EACH OTHER. STAGGER STRIPS IN A BRICK-LIKE PATTERN. ENSURE THAT THE SOD IS NOT STRETCHED OR OVERLAPPED. TRIM AND FIT IRREGULARY AREAS WITH A KNIFE OR SHARP SPADE.
5. INSTALL STRIPS OF SOD WITH THEIR LONGEST DIMENSION PERPENDICULAR TO THE SLOPE. ON SLOPES 3:1 OR GREATER, OR WHEREVER EROSION MAY BE A PROBLEM, SECURE SOD WITH PEGS OR STAPLES.
6. AFTER SODDING OF AREAS IS COMPLETE, ROLL SOD TO PROVIDE FIRM CONTACT BETWEEN ROOTS AND SOIL.
7. IRRIGATE UNTIL THE SOIL IS WET 4 INCHES BELOW THE SOD. KEEP SODDED AREAS MOIST TO A DEPTH OF 4 INCHES UNTIL GRASS TAKES ROOT.
8. NO MOWING SHOULD OCCUR UNTIL THE SOD IS FIRMLY ROOTED, USUALLY 2-3 WEEKS.

MAINTENANCE:
WATER AS NECESSARY TO MAINTAIN ADEQUATE MOISTURE. GRASS HEIGHT SHOULD BE MAINTAINED BETWEEN 1 AND 2 INCHES. APPLY FERTILIZER ANNUALLY AT A RATE OF 5-6 LB NITROGEN PER 1,000 SF.

LANDSCAPE NOTES:

1. THE CONTRACTOR SHALL VERIFY LOCATION AND ELEVATION OF ALL UNDERGROUND UTILITIES. THE LOCATION OF ALL EXISTING UTILITIES ARE NOT NECESSARILY SHOWN ON THE PLANS AND WHERE SHOWN ARE ONLY APPROXIMATE. THE CONTRACTOR SHALL ON HIS INITIATIVE AND AT NO EXTRA COSTS HAVE LOCATED ALL UNDERGROUND LINES AND STRUCTURES AS NECESSARY. NO CLAIMS FOR DAMAGES OR EXTRA COMPENSATION SHALL ACCRUE TO THE CONTRACTOR FROM THE PRESENCE OF SUCH PIPE, OTHER OBSTRUCTIONS OR FROM ANY DELAY DUE TO REMOVAL OR REARRANGEMENT OF THE SAME. THE CONTRACTOR SHALL BE RESPONSIBLE FOR ANY DAMAGE TO UNDERGROUND STRUCTURES. THE CONTRACTOR IS RESPONSIBLE FOR CONTACTING ALL NON-SUBSCRIBING UTILITIES. THE CONTRACTOR(S) SHALL CONTACT NORTH CAROLINA "ONE-CALL" AT 1-800-632-4949 FOR ASSISTANCE IN LOCATING EXISTING UTILITIES. CALL AT LEAST 48 HOURS PRIOR TO ANY DIGGING.
2. ENTIRE SITE SHALL BE SODDED UNLESS SPECIFIED ON PLAN OR REQUESTED BY REGIONAL CONSTRUCTION MANAGER USE LOCALLY ADAPTED SOD.
3. THE GENERAL CONTRACTOR SHALL LEAVE THIS SITE AT 6" FROM FINISHED GRADE. THE LANDSCAPE CONTRACTOR SHALL REVISE GRADES AT A MINIMUM TO ENSURE SMOOTH TRANSITIONS BETWEEN PLANTING BEDS AND LAWN AREAS.
4. PLANT GUARANTEE: ALL PLANTS SHALL BE GUARANTEED TO LIVE FOR TWELVE MONTHS. THE GUARANTEE SHALL COMMENCE UPON FINAL ACCEPTANCE OF THE PROJECT. IF ANY PLANTS ARE DEAD OR IN AN UNHEALTHY CONDITION BEFORE FINAL ACCEPTANCE, THE LANDSCAPE CONTRACTOR SHALL REPLACE DEAD OR DYING PLANT MATERIAL AT HIS EXPENSE. THIS REPLACEMENT SHALL NOT BE CONSIDERED A GUARANTEED REPLACEMENT.
5. ALL PLANTING SHALL BE PLACED WITHIN A MULCHED PLANTING BED. ALL STRAPPING AND THE TOP 2/3 OF WIRE BASKETS MUST BE CUT AWAY AND REMOVED FROM ROOT BALLS PRIOR TO BACKFILLING PLANTING PIT. REMOVE TOP 1/3 OF BURLAP FROM ROOT BALL.
6. ALL LANDSCAPE WORK SHALL BE IN ACCORDANCE WITH CURRENT CITY STANDARD DETAILS AND SPECIFICATIONS.
7. ALL AREAS NOT MULCHED SHALL BE SEEDED OR SODDED IN ACCORDANCE WITH THE AREA SPECIFIED ON PLANS WITH GRASS SPECIES RECOMMENDED FOR REGION AS PRESCRIBED IN THE SEEDING SCHEDULE AS SHOWN ON THIS SHEET.
8. SITE LIGHTING SHALL NOT BE PLACED IN CONFLICT WITH PLANTED TREES.
9. TREE PROTECTION FENCING TO BE PROVIDED AROUND TREE PRESERVATION AREAS IN ACCORDANCE WITH CITY STANDARDS.
10. COORDINATE ALL WORK WITH SITE LAYOUT AND SITE GRADING, DRAINAGE & UTILITIES PLAN.
11. MULCH ALL AREAS, THAT ARE NOT SEEDED OR SODDED, WITH SHREDDED HARDWOOD MULCH OR APPROVED EQUAL AS SPECIFIED TO A DEPTH OF 3"-4".
12. THE SELECTION AND INSTALLATION OF PLANTS AND PLANTING METHODS SHALL CONFORM WITH THE STANDARDS OF THE AMERICAN ASSOCIATION OF NURSERYMEN OR THE CITY STANDARD DETAILS AND SPECIFICATIONS, WHICHEVER IS STRICTER.
13. CONTRACTOR IS RESPONSIBLE FOR VERIFYING ALL QUANTITIES. DRAWINGS SHALL RULE OVER PLANT LISTS.
14. SUBSTITUTIONS SHALL BE SUBMITTED TO LANDSCAPE ARCHITECT OR ENGINEER FOR APPROVAL, PRIOR TO INSTALLATION, SUBSTITUTIONS MAY REQUIRE ADDITIONAL APPROVAL BY THE GOVERNING JURISDICTION.
15. ALL LANDSCAPING SOIL AND FILL SHALL BE FREE FROM WEEDS, REFUSE, AND DEBRIS AT ALL TIMES.
16. TREES AND LARGE SHRUBS SHALL BE ADEQUATELY SUPPORTED, AS NECESSARY, USING STAKES AND GUYS. SUCH SUPPORTS SHALL BE DESIGNED SO AS TO PROTECT TREES AND SHRUBS FROM INJURY. TREES AND SHRUBS SHALL BE FASTENED TO THE SUPPORT WITH AN ACCEPTABLE COMMERCIAL TREE TIE OF PLASTIC OR HOSE COVERED WIRE.
17. NO OBSTRUCTIONS SHALL BE PERMITTED IN THE SPACE BETWEEN THIRTY (30) INCHES AND TEN (10) FEET ABOVE GROUND LEVEL WITHIN THE AREA OF THE TRIANGULAR SIGHT DISTANCE.
18. ALL LANDSCAPE AREAS SHALL BE ROUGH GRADED TO 6" BELOW TOP OF ALL WALKS AND CURBS. FINISH GRADING, LANDSCAPING AND SPRINKLER SYSTEMS ARE BY THE OWNER/OPERATOR.

IT IS THE GENERAL CONTRACTOR'S RESPONSIBILITY TO COORDINATE WITH THE IRRIGATION CONTRACTOR, FOR IRRIGATION SLEEVE SIZE, FOR IRRIGATION SYSTEM.

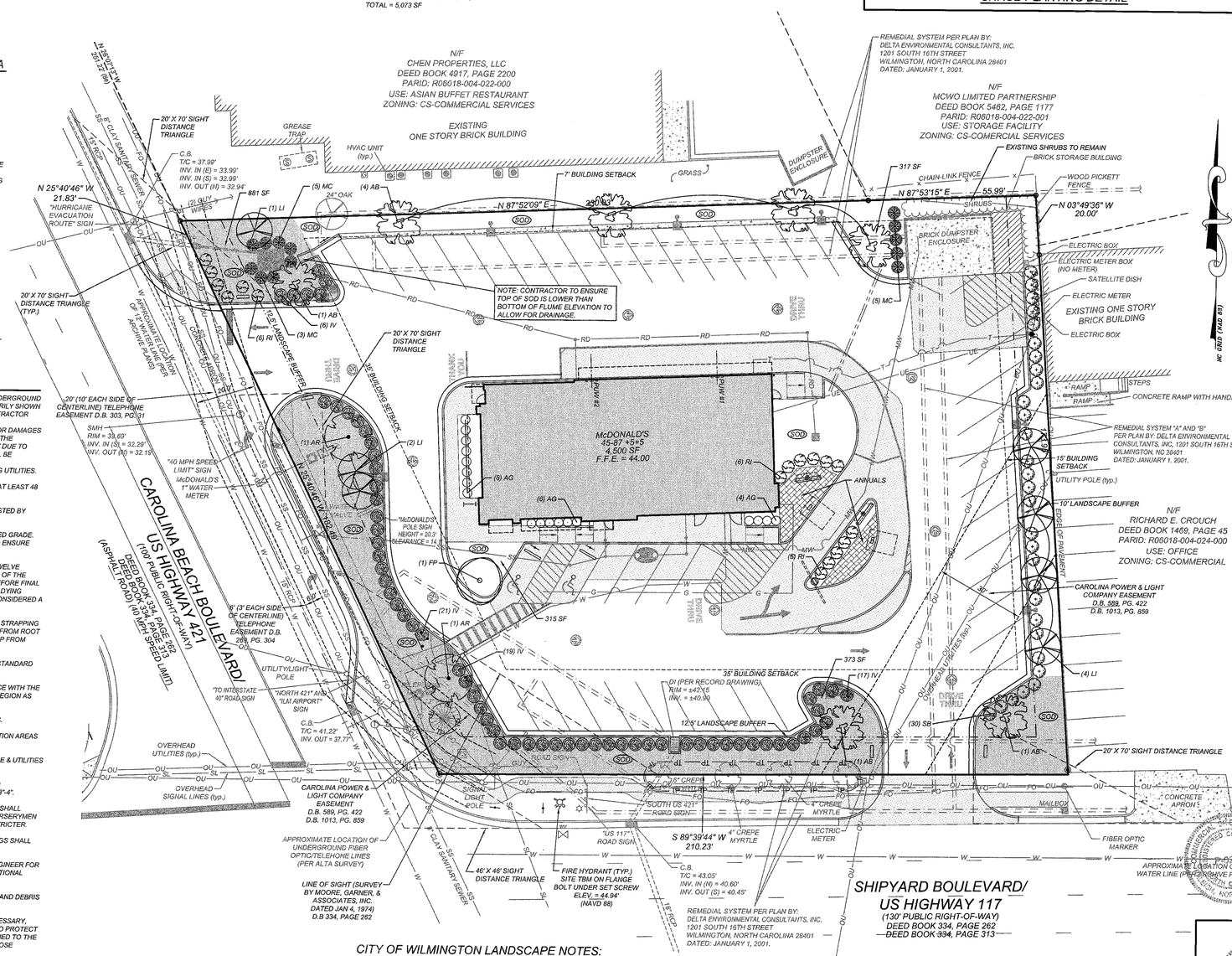

CITY OF WILMINGTON LANDSCAPE NOTES:

1. A RAIN / FREEZE SENSOR SHALL BE INSTALLED AS PART OF ANY IRRIGATION SYSTEM USED ON SITE.
2. ALL PLANTED AND RETAINED LIVING MATERIAL REQUIRED TO MEET THE PROVISIONS OF THE CITY OF WILMINGTON LAND DEVELOPMENT CODE, SHALL BE PERPETUALLY PROTECTED AND MAINTAINED TO PROFESSIONALLY ACCEPTED STANDARDS BY JOINT AND SEVERAL RESPONSIBILITY OF THE OWNER, OCCUPANT, TENANT, AND RESPECTIVE AGENTS OF THE PROPERTY ON WHICH THE MATERIAL IS LOCATED.

GRAPHIC SCALE
20 0 10 20 40
1 inch = 20 ft.

EXISTING LEGEND

▲	CALCULATED POINT	AC =	ACRES
◉	EXISTING IRON PIPE	ACSM =	AMERICAN CONGRESS ON SURVEYING AND MAPPING
◆	BORE HOLE	ALTA =	AMERICAN LAND TITLE ASSOCIATION
○	IRON PIPE SET	B.M. =	BOOK OF MAPS
Ⓢ	SANITARY SEWER MANHOLE	EIP =	EXISTING IRON PIPES
Ⓒ	SANITARY SEWER CLEANOUT	ELEV =	ELEVATION
⋈	WATER VALVE	FIRM =	FLOOD INSURANCE RATE MAP
⊠	WATER METER	GPS =	GLOBAL POSITIONING SYSTEM
⋇	FIRE HYDRANT	HUD =	HOUSING URBAN DEVELOPMENT
Ⓣ	TELEPHONE PEDESTAL	HYD =	FIRE HYDRANT
Ⓣ	TELEPHONE MANHOLE	INV =	INVERT
▣	ELECTRIC BOX	IPS =	IRON PIPE SET
☼	LIGHT POLE	LLC =	LIMITED LIABILITY COMPANY
	POWER POLE	MPH =	MILES PER HOUR
	CURB INLET	MSL =	MEAN SEA LEVEL
Ⓓ	STORM DRAINAGE MANHOLE	N/F =	NOW OR FORMERLY
□	YARD INLET	NSPS =	NATIONAL SOCIETY OF PROFESSIONAL SURVEYORS
	STORM DRAIN	NTS =	NOT TO SCALE
OU	OVERHEAD UTILITIES	R.C.P. =	REINFORCED CONCRETE PIPE
UE	UNDERGROUND ELECTRIC	R/W =	RIGHT-OF-WAY
UT	UNDERGROUND TELEPHONE	SF =	SQUARE FOOT
W	WATER LINE	S.R. =	STATE ROAD
SS	SANITARY SEWER LINE	TBM =	TEMPORARY BENCH MARK
G	GAS LINE	TWSP =	TOWNSHIP
X X	FENCE LINE	TYP =	TYPICAL
FO	FIBER OPTIC LINE		
	PROPERTY LINE		

PARKING INFORMATION

TOTAL SPACES 45	31	SPACES	9.0'	X	18.0'	@ 60°
	12	SPACES	9.0'	X	20.0'	@ 60°
	2	SPACES (HANDICAP)	8.0'	X	18.0'	@ 60°
	-	SPACES	9.0'	X	18.0'	@ 90°

UTILITY INFORMATION

	SIZE & TYPE	LOCATION
SANITARY SEWER	8" CLAY	ALONG CAROLINA BEACH RD (SAME SIDE)
STORM SEWER	15" & 18" RCP	ALONG CAROLINA BEACH RD & SHIPYARD BLVD.
WATER	16" PUBLIC	ALONG CAROLINA BEACH RD & SHIPYARD BLVD.
GAS	2" MAIN	ALONG CAROLINA BEACH RD (OPPOSITE SIDE)
ELECTRIC	OVERHEAD	ALONG CAROLINA BEACH RD & SHIPYARD BLVD.
TELEPHONE	OVERHEAD	ALONG CAROLINA BEACH RD
FIRE HYDRANT	PUBLIC	NEAR SW CORNER OF SITE

SURVEY INFORMATION

PREPARED BY: COMMERCIAL SITE DESIGN, PLLC
8312 CREEDMOOR ROAD
RALEIGH, NORTH CAROLINA 27613
PHONE: (919) 848-6121
DATE OF ORIGINAL FIELD SURVEY: OCTOBER 10, 2012 DATE OF MAP: NOVEMBER 6, 2012

PLAN SCALE: 1" = 20'

STREET ADDRESS
2543 CAROLINA BEACH ROAD

CITY	STATE
WILMINGTON	NORTH CAROLINA

COUNTY
NEW HANOVER

TAX PARCEL NUMBER	LOCATION CODE NUMBER
R06018-004-023-000	32-0062

CSD FILENAME: MCD1216-LS

REV	DATE	DESCRIPTION	BY	ISSUED?
1	12-12-12	PERMIT ISSUE	JWR	
2	1-16-13	CITY OF WILMINGTON COMMENTS	STH	
3	03-28-13	CITY OF WILMINGTON COMMENTS #2 & NCDOT	JWR	
4	05-13-13	CITY OF WILMINGTON COMMENTS #3 & NCDOT	JWR	
5	06-24-13	CITY OF WILMINGTON COMMENTS #4 & NCDOT	JWR	

COMMERCIAL SITE DESIGN
8312 CREEDMOOR ROAD
RALEIGH, NORTH CAROLINA 27613
(919) 848-4201 FAX: (919) 848-5741
WWW.CSITEDESIGN.COM

McDonald's
RALEIGH REGION
4601 SW FORKS ROAD - SUITE 200 - RALEIGH, N.C. 27609
THESE PLANS AND SPECIFICATIONS ARE THE PROPERTY OF MACDONALDS CORPORATION AND SHALL NOT BE REPRODUCED WITHOUT THEIR WRITTEN PERMISSION.

PLAN APPROVAL
SIGNATURE (2 REQUIRED) | DATE
REGIONAL MGR.
REGIONAL DEV. DIRECTOR
REGIONAL CONSTRUCTION MGR.
REGIONAL REAL ESTATE MGR.

CO-SIGN SIGNATURES | DATE
AREA CONSTRUCTION MGR.
CONTRACTOR

STATUS	DATE	BY
FINAL	-	-
PLAN CHECKED	-	-
AS-BUILT	-	-

L-1
LANDSCAPE PLAN

WARP 9 LED SERIES

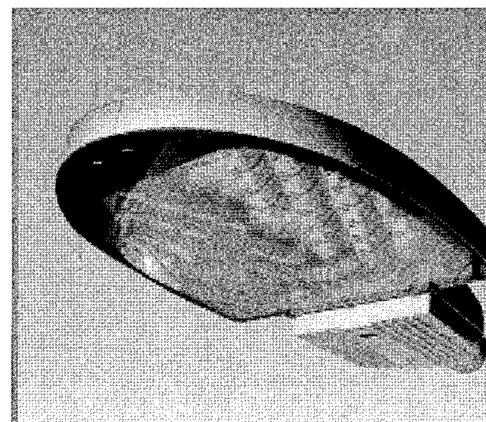

By combining the most powerful solid state (LED) lighting technology with the most advanced glare controlling optical reflectors, the Warp 9 has emerged as the next generation in LED architectural area lighting! This new series offers multiple true IES lighting distributions while meeting or exceeding both domestic and international outdoor lighting codes to maintain existing industry standard pole spacings. The Warp 9 is a dark skies cutoff fixture that vastly increases uniformity and extinguishes unwanted backlight trespass all while dramatically reducing glare. The individual reflector modules and/or the whole optical system are interchangeable for system sustainability and to allow the fixture to be upgraded as technology further develops. The Warp 9 LED series leaves no stone unturned in the quest to bring you tomorrow's lighting today!

Fixture Specifications

FEATURES

- Cast aluminum construction, finished in weatherproof powder-coat paint
- Fully integral driver system for completely self-contained housing
- True IES lighting distributions available to optimize lighting layout design
- Low wattage (140w large, 75w small) 50,000 hour long life LED illumination
- 5 year LED component warranty
- IES cutoff rating
- Extreme glare and light trespass control with unmatched uniformity
- Completely interchangeable LED array module for upgradeability and sustainability

DIMENSIONS

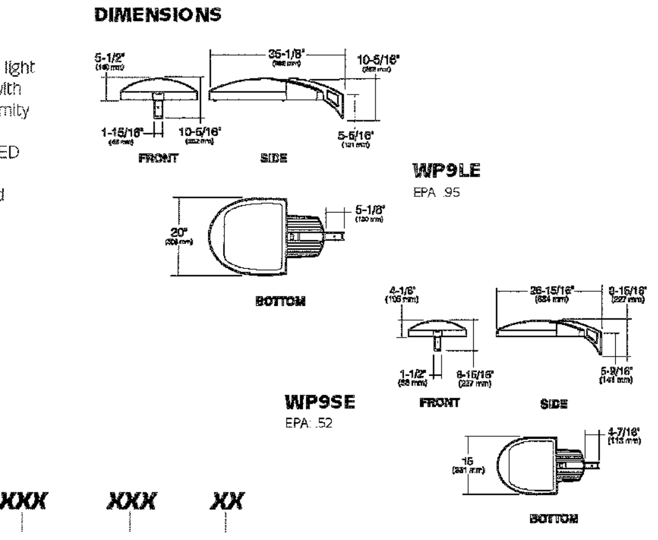

ORDERING INFORMATION

SAMPLE CATALOG NUMBER

WP9	XX	X	XXX	XXX	XX
Series	Size	Distribution	Color Temperature	Voltage	Finish

SERIES	
WP9	Warp 9 LED

SIZE	
LE	Large (140 watt)
SE	Small (75 watt)

DISTRIBUTION	
3	Type 3
4	Type 4
5	Type 5

COLOR TEMPERATURE	
L3K	3500K
L5K	5100K

VOLTAGE	
120	120V
277	277V

FINISH	
DB	Dark Bronze
PS	Platinum Silver
BL	Black
WH	White

SECURITY LIGHTING SYSTEMS — A HUBBELL LIGHTING, INC. COMPANY

Performance Designed Lighting Products www.securitylighting.com

1085 Johnson Drive • Buffalo Grove, IL 60089 • TOLL-FREE: 800-544-4848 • PHONE: 847-279-0627 • FAX: 847-279-0642

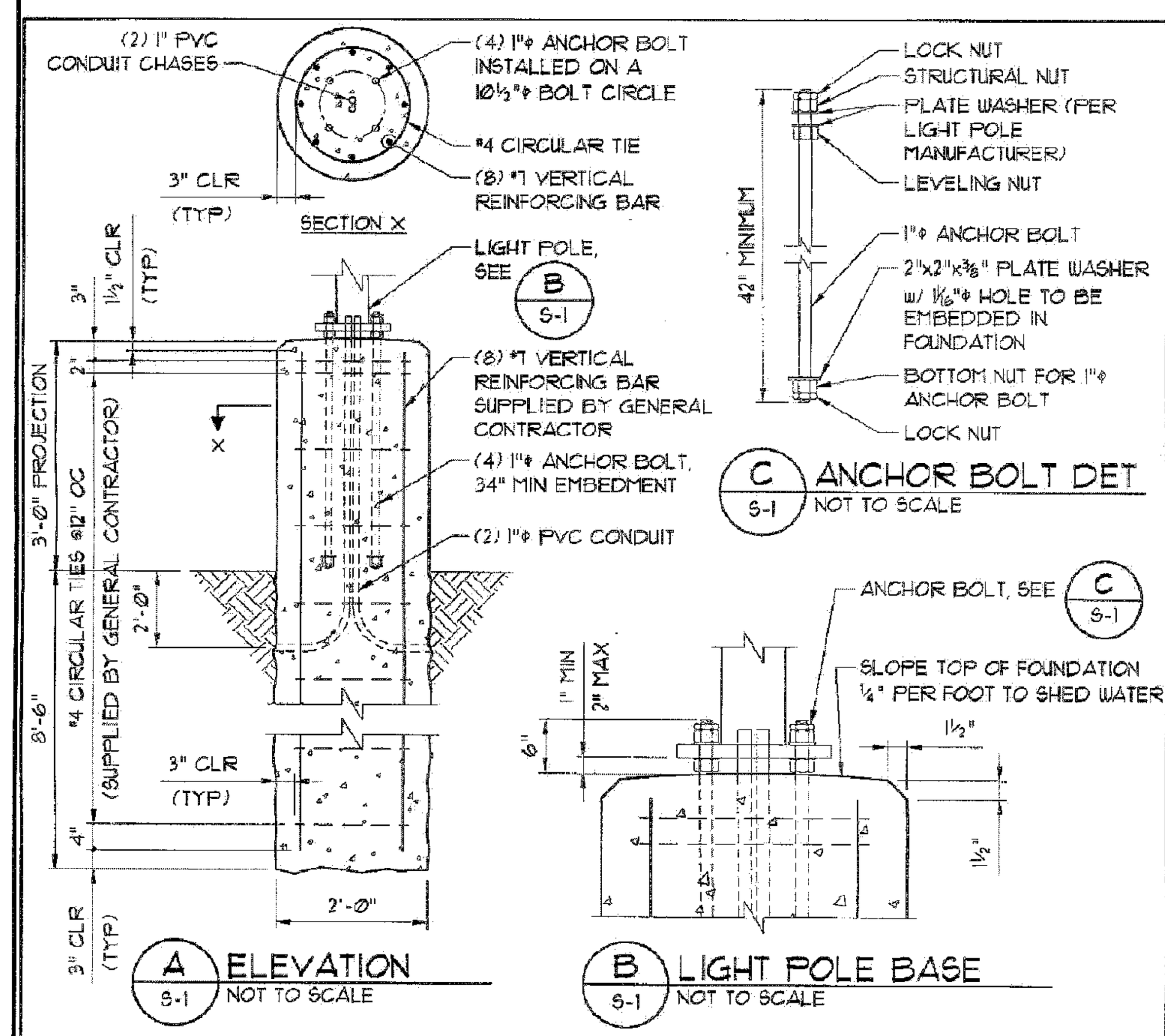

GENERAL NOTES

1. CONCRETE COMPRESSIVE STRENGTH (f'c) SHALL BE A MINIMUM OF 3,000psi AT 28 DAYS.
2. ANCHOR BOLTS SHALL BE ASTM F1554 GRADE 55, HOT DIP GALVANIZED PER ASTM F2329.
3. REINFORCING STEEL SHALL BE ASTM A615 GRADE 60, SUPPLIED BY GENERAL CONTRACTOR.
4. NUTS SHALL BE HEAVY HEX ASTM A563 GRADE DH, HOT DIP GALVANIZED PER ASTM A153.
5. PLATE SHALL BE ASTM A572 GRADE 50, HOT DIP GALVANIZED PER ASTM A153.
6. LOCK NUT SHALL BE HOT DIP GALVANIZED PER ASTM A153.
7. ALLOWABLE SOIL BEARING = 2,000 psf BY TEST.
8. DESIGN WIND LOAD = 140 mph.

NORTH CAROLINA PROFESSIONAL SEAL 5617 ENGINEER DALLAS BRICKHOUSE, JR. 2/7/13

DWGN	2/7/13	DAC	Light Pole Base - McDonalds
DSGN	2/7/13	GDB	2543 Carolina Beach Road
CHKD	2/7/13	GDB	Wilmington, New Hanover Co., NC
PROJ NO.	1296		
SCALE	AS NOTED		

DRAWING NO. S-1 of 1 REV

DALLAS BRICKHOUSE, JR., PE
CONSULTING ENGINEER
1012 Bayfield Drive
Raleigh, North Carolina 27606
(P) 919-851-2485, (C) 919-302-8728
gdbrick2@yahoo.com

GENERAL SITE NOTES:

1. THE CONTRACTOR SHALL VERIFY LOCATION AND ELEVATION OF ALL UNDERGROUND UTILITIES. THE LOCATION OF ALL EXISTING UTILITIES ARE NOT NECESSARILY SHOWN ON THE PLANS AND WHERE SHOWN ARE ONLY APPROXIMATE. THE CONTRACTOR SHALL ON HIS INITIATIVE AND AT NO EXTRA COSTS HAVE LOCATED ALL UNDERGROUND LINES AND STRUCTURES AS NECESSARY. NO CLAIMS FOR DAMAGES OR EXTRA COMPENSATION SHALL ACCRUE TO THE CONTRACTOR FROM THE PRESENCE OF SUCH PIPE, OTHER OBSTRUCTIONS OR FROM ANY DELAY DUE TO REMOVAL OR REARRANGEMENT OF THE SAME. THE CONTRACTOR SHALL BE RESPONSIBLE FOR ANY DAMAGE TO UNDERGROUND STRUCTURES. THE CONTRACTOR IS RESPONSIBLE FOR CONTACTING ALL NON-SUBSCRIBING UTILITIES. THE CONTRACTOR(S) SHALL CONTACT NORTH CAROLINA "ONE-CALL" AT 1-800-632-4949 FOR ASSISTANCE IN LOCATING EXISTING UTILITIES. CALL AT LEAST 48 HOURS PRIOR TO ANY DIGGING.
2. LOT LIGHTING CONCRETE FOOTINGS TO CONFORM WITH THE SOILS REPORT RECOMMENDATIONS FOR THIS PARTICULAR SITE.

NOTES:

1. THE FOOTCANDLE LEVELS AS SHOWN ARE BASED ON THE FOLLOWING CRITERIA. ANY SUBSTITUTIONS IN SPECIFIED FIXTURES OR CHANGES TO LAYOUT WILL AFFECT LIGHTING LEVELS SHOWN AND WILL NOT BE THE RESPONSIBILITY OF SECURITY LIGHTING.
2. THE CONTRIBUTION OF THE SOFFIT / BUILDING LIGHTING IS NOT REFLECTED ON THE DRAWING UNLESS SOFFIT / BUILDING LIGHTING IS SPECIFIED IN THE FIXTURE SCHEDULE BELOW.
3. DISTANCE BETWEEN READINGS 10'
4. FINAL ADJUSTMENTS TO AIMING ANGLE/DIRECTION OF FIXTURES MAY BE REQUIRED TO ELIMINATE LIGHT TRESPASS OR GLARE ONTO ADJOINING PROPERTIES OR ROADWAYS.

UNLESS OTHERWISE SPECIFIED, ALL DIMENSIONS ARE IN INCHES			
NOTES:			
SCALE 1" = 20' 0"	DATE	NEXT ASSEMBLY	REF. DRWGS.
DRAWN BY MJW	12/04/12		
CHECKED BY			
APPROVED BY			
APPROVED BY		FINISH	
APPROVED BY			
SHOP ORDER		MATERIAL	
PROJECT NO.			

SECURITY LIGHTING SYSTEMS — Performance Designed Lighting Products, 1085 Johnson Dr., Buffalo Grove, Illinois 60089, 1-800-544-4848

POINT-BY-POINT FOOTCANDLE PLOT FOR
- McDONALD'S -
CAROLINA BEACH BLVD.
WILMINGTON, NC

DRAWING NUMBER 1PCP 26952

** - SPECIFY COLOR

NOTE: ALL POLES ARE DRILLED

FIXTURE TYPE:	SYMBOL	FIXTURE QUANTITY	CONFIG	QUANTITY	EPA	MOUNTING HEIGHT	LLF	POLE TYPE:	QUANTITY	WIND LOAD	ALLOWED EPA
WP9-LE-4-L5K-**	●■	13	SGL	6	0.95	15'	1.00	SSP-4112-GL-** (4")	9	110mph	8.2
			DBL90	2	1.90						
			TRPL90	1	2.85						

* PROJECT WIND LOAD CRITERIA BASED ON: ASCE 7-10 WIND SPEEDS (3-SEC PEAK GUST MPH) 50 YEAR MEAN RECURRENCE INTERVAL

THIS LIGHTING PATTERN REPRESENTS ILLUMINATION LEVELS CALULATED FROM LABORATORY DATA TAKEN UNDER CONTROLLED CONDITIONS IN ACCORDANCE WITH ILLUMINATING ENGINEERING SOCIETY APPROVED METHODS. ACTUAL PERFORMANCE OF ANY MANUFACTURER'S LUMINAIRES MAY VARY DUE TO VARIATION IN ELECTRICAL VOLTAGE, TOLERANCE IN LAMPS, AND OTHER VARIABLE FIELD CONDITIONS.

PAVED SURFACE READINGS

Average	2.8
Maximum	10.0
Minimum	0.4
Avg:Min	6.90
Max:Min	25.00

PROPERTY LINE READINGS

Average	0.3
Maximum	0.9
Minimum	0.0

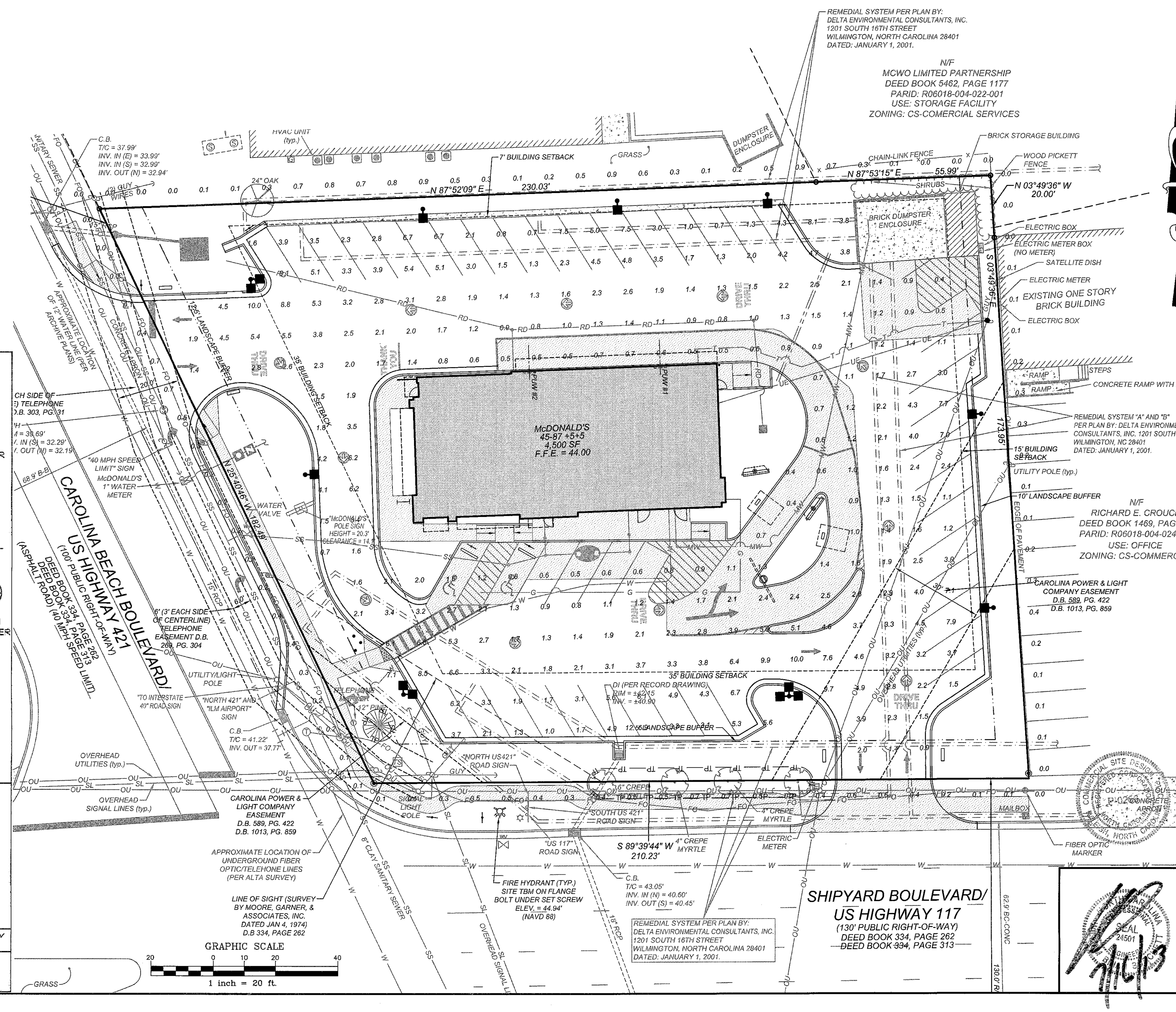

LOT LIGHTING RECOMMENDATION

SEE LIGHTING PLAN FOR SECURITY LIGHTING, INC. SPECIFICATIONS OR OTHER SITE SPECIFIC LIGHT MANUFACTURERS.

GENERAL CONTRACTOR TO NOTE CORRECT LOCATION FIXTURES.

NOTE: ELECTRICAL CONTRACTOR TO CIRCUIT LOT LIGHTING AS NOTED.

PARKING INFORMATION

TOTAL SPACES							
45	31	SPACES	9.0'	X	18.0'	@	60°
	12	SPACES	9.0'	X	20.0'	@	60°
	2	SPACES (HANDICAP)	8.0'	X	18.0'	@	60°
	-	SPACES	9.0'	X	18.0'	@	90°

UTILITY INFORMATION

	SIZE & TYPE	LOCATION
SANITARY SEWER	8" CLAY	ALONG CAROLINA BEACH RD (SAME SIDE)
STORM SEWER	15" & 18" RCP	ALONG CAROLINA BEACH RD & SHIPYARD BLVD.
WATER	16" PUBLIC	ALONG CAROLINA BEACH RD & SHIPYARD BLVD.
GAS	2" MAIN	ALONG CAROLINA BEACH RD (OPPOSITE SIDE)
ELECTRIC	OVERHEAD	ALONG CAROLINA BEACH RD & SHIPYARD BLVD.
TELEPHONE	OVERHEAD	ALONG CAROLINA BEACH RD
FIRE HYDRANT	PUBLIC	NEAR SW CORNER OF SITE

SURVEY INFORMATION

PREPARED BY: COMMERCIAL SITE DESIGN, PLLC
8312 CREEDMOOR ROAD
RALEIGH, NORTH CAROLINA 27613
PHONE: (919) 848-6121
DATE OF ORIGINAL FIELD SURVEY: OCTOBER 10, 2012 DATE OF MAP: NOVEMBER 6, 2012

PLAN SCALE: 1" = 20'

STREET ADDRESS
2543 CAROLINA BEACH ROAD

CITY	STATE
WILMINGTON	NORTH CAROLINA

COUNTY
NEW HANOVER

TAX PARCEL NUMBER	LOCATION CODE NUMBER
R06018-004-023-000	32-0062
CSD FILENAME: MCD1216-LI	

REV	DATE	DESCRIPTION	BY	ISSUE/REF

COMMERCIAL SITE DESIGN
8312 CREEDMOOR ROAD
RALEIGH, NORTH CAROLINA 27613
(919) 848-6121, FAX: (919) 848-3741
WWW.CSITEDESIGN.COM

McDonald's®

THESE PLANS AND SPECIFICATIONS ARE THE PROPERTY OF McDONALD'S CORPORATION AND SHALL NOT BE REPRODUCED WITHOUT THEIR WRITTEN PERMISSION.

OFFICE: RALEIGH REGION
ADDRESS: 4601 SIX FORKS ROAD - SUITE 200 - RALEIGH, N.C. 27609

PLAN APPROVAL

	SIGNATURE (2 REQUIRED)	DATE
REGIONAL MGR.		
REGIONAL DEV. DIRECTOR		
REGIONAL CONSTRUCTION MGR.		
REGIONAL REAL ESTATE MGR.		
CO-SIGN SIGNATURES		
AREA CONSTRUCTION MGR.		
CONTRACTOR		

STATUS	DATE	BY
FINAL	-	-
PLAN CHECKED	-	-
AS-BUILT	-	-

L-2
LIGHTING PLAN

GENERAL NOTES

1. THE CONTRACTOR SHALL BE RESPONSIBLE FOR BRACING ALL WORK DURING CONSTRUCTION.
2. FOOTINGS ARE DESIGNED FOR AN ALLOWABLE SOIL PRESSURE OF 1500 PSF.
3. CONCRETE SHALL HAVE A MINIMUM ULTIMATE 28-DAY COMPRESSIVE STRENGTH OF 2500 PSI, EXCEPT SLAB ON GRADE SHALL BE 4000 PSI WITH 4" MAXIMUM SLUMP.
4. ALL STRUCTURAL STEEL SHALL BE ASTM A36.
5. ALL BOLTS SHALL BE ASTM A325, EXCEPT ANCHOR BOLTS MAY BE ASTM A307.
6. ALL WELDING SHALL BE DONE ACCORDING TO AMERICAN WELDING SOCIETY (A.W.S.) SPECIFICATIONS BY A.W.S. CERTIFIED WELDERS.
7. AIR ENTRAINING AGENTS SHALL BE USED TO PRODUCE 3% TO 6% AIR BY VOLUME IN ALL CONCRETE.
8. WOOD STRENGTH Fb = 1,200 PSI, E = 1,600 KSI
9. MASONRY (CMU) STRENGTH (fm) 1350 PSI
10. GROUT SHALL BE NON-SHRINK WITH A 28-DAY STRENGTH OF 2000 PSI. EXPOSED GROUT SHALL BE NON-STAINING.
11. ALL BAR REINFORCEMENT STEEL SHALL BE ASTM A615 GRADE 60, EXCEPT GRADE 40 MAY BE USED FOR TIES AND STIRRUPS.
12. WELDED WIRE FABRIC (W.W.F.) SHALL CONFORM TO ASTM C-185. ALTERNATIVE REINFORCEMENT TO W.W.F FOR SLAB IS A POCY PROPYLENE FIBER PRODUCT, FIBERMESH 150 OR EQUAL.
13. TYPE "S" MORTAR SHALL BE USED U.N.O.
14. DETAILS WHICH ARE NOT SHOWN SHALL BE ACCORDING TO SPECIFICATION AND CODE OF THE AMERICAN INSTITUTE OF STEEL CONSTRUCTION, THE AMERICAN CONCRETE INSTITUTE, THE BRICK INSTITUTE OF AMERICA, THE STANDARD BUILDING CODE, AND ANY LOCAL ORDINANCES.
15. REINFORCED MASONRY GROUT (RMG) FOR FILLING CELLS IN CONCRETE BLOCK, SHALL CONFORM TO STANDARD SPECIFICATIONS FOR GROUT FOR REINFORCED MASONRY, ASTM C-476, WITH A SLUMP OF BETWEEN 8" AND 11". IT SHALL BE PLACED IN LIFTS OF NOT MORE THAN 4'-0", AND SHALL BE PLACED NO LATER THAN 2 1/2 HOURS AFTER WATER HAS BEEN FIRST ADDED.
16. LOAD BEARING CONCRETE MASONRY SHALL CONFORM TO ASTM C90 GRADE N2 FOR EXTERIOR WALLS AND WALLS BELOW GRADE.
17. THESE DRAWINGS SHALL NOT BE SCALED.
18. EXTERIOR WALLS AND DOOR OF THE STORAGE BUILDING SHALL MATCH THE MAIN BUILDING.
19. THE STORAGE BUILDING'S CONCRETE FLOOR SHALL BE SEALED.
20. ALL WORK TO BE COMPLETED ACCORDING TO ALL APPLICABLE CODES AND ORDINANCES.
21. CONTRACTOR TO VERIFY EXISTING & NEW CONDITIONS AND DIMENSIONS PRIOR TO CONSTRUCTION.
22. ALL MATERIALS AND ITEMS TO BE INSTALLED ACCORDING TO THE MANUFACTURERS RECOMMENDATIONS AND SPECIFICATIONS AND SHALL MATCH EXISTING MATERIALS AND COLORS.
23. CONTRACTOR TO USE CIRCUIT ALLOTTED FOR STORAGE BUILDING AND RE-USE UNDERGROUND WIRING CONDUIT IF DEEMED APPROPRIATE.
24. SEE THE LATEST EDITION OF THE "PROJECT MANUAL FOR THE McDONALD'S STANDARD BUILDING PROGRAM" FOR FURTHER INFORMATION AND SPECIFICATIONS.
25. WATERPROOF BLOCK INTERIOR SIDE OF BLOCK AND MORTAR
26. SEAL TOP OF BLOCK AND BRICK OF TRASH PORTION WITH ROLOCK CAP.

BUILDING DATA: STORAGE BUILDING

OCCUPANCY: S-1, STORAGE (DRY GOODS IN CARDBOARD BOXES) UNCONDITIONED

CONSTRUCTION TYPE: VI (UNPROTECTED/UNSPRINKLED)

STORAGE BUILDING AREA: VARIES

STORAGE BUILDING STORIES: 1 STORY (1 STORY ALLOWED)

STORAGE BUILDING HEIGHT: < 9'-0"

EXTERIOR WALLS: 6" LIGHTWEIGHT CONCRETE BLOCK WITH 4" BRICK VANEER ACI 216, CHAPTER 3: EQUIVALENT THICKNESS IS EQUAL TO 1 HOUR. PER TABLE 600, WALLS MORE THAN 3' CLEAR FROM PROPERTY

LIFE SAFETY SYSTEM: LINE = 0 HOUR RATING

SPRINKLER:	NO
EMERGENCY LIGHTING AND EXIT SIGNS:	NO
FIRE ALARM AND SMOKE DETECTION SYSTEMS:	NO
PANIC HARDWARE:	NO

MARK	DESCRIPTION
4	4" STRIP FLUORESCENT 1-32 WATT SURFACE MOUNTED EXPANDED METAL GUARD MOUNTED TO CEILING (SEE PLAN FOR NUMBER REQUIRED)
1	4'-0" x 7'-0" x 1 3/4" 16GA. HOLLOW METAL DOOR & FRAME ADD HAGER ROTON HINGE & LCN DOOR CLOSER BUCKS LOCKSET

NOTES

1. EXTERIOR FINISH OF ENCLOSURE TO BE BRICK TO MATCH THE VENEER BRICK USED ON THE BUILDING.
2. IF EXTERIOR FINISH OF BUILDING IS NOT BRICK, CONSULT PROJECT A.C.M.

MAXIMUM DESIGN CATEGORIES	
LOAD TYPE	DESIGN CAPACITY
WIND	140 MPH - 3 SEC GUST
LIVE (SNOW)	20 PSF
SIESMIC	CAT I, CLASS D S_s = 50% S_1 = 10%

DESIGN CONFORMS TO THE FOLLOWING CODES	
N.C.S.B.C	2009
I.B.C.	2006
I.B.C.	2009
V.U.S.B.C.	2006

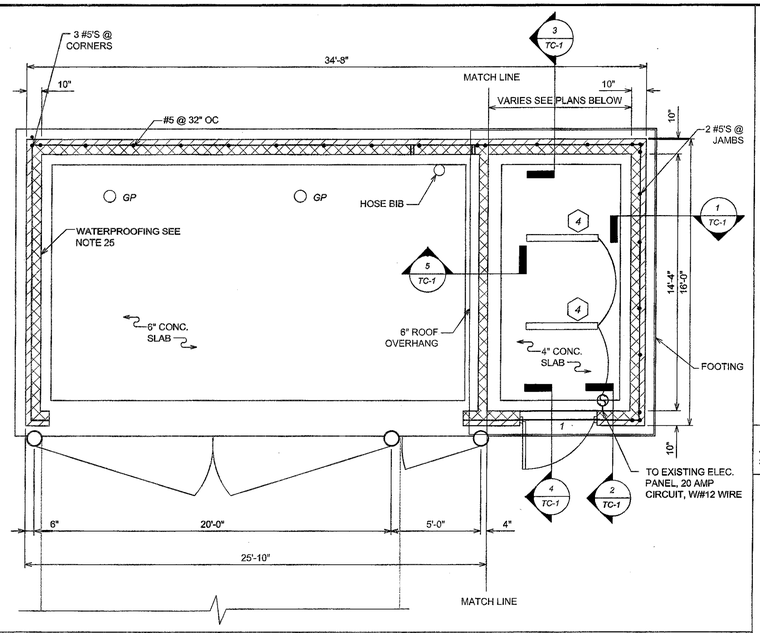

TRASH CORRAL PLAN VIEW

SCALE: 1/4" = 1'-0"

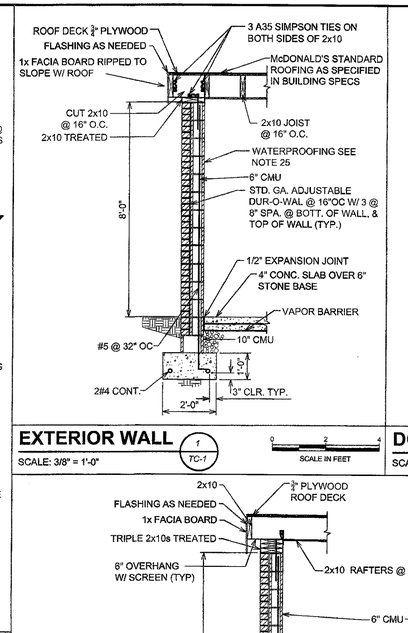

EXTERIOR WALL

SCALE: 3/8" = 1'-0"

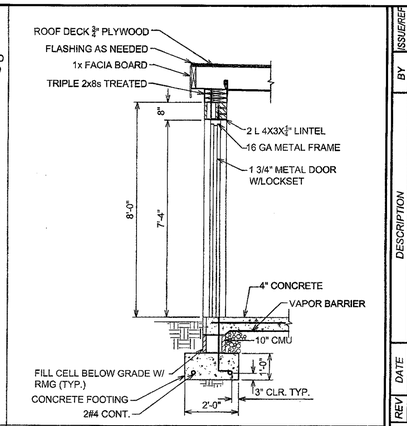

DOOR SECTION

SCALE: 3/8" = 1'-0"

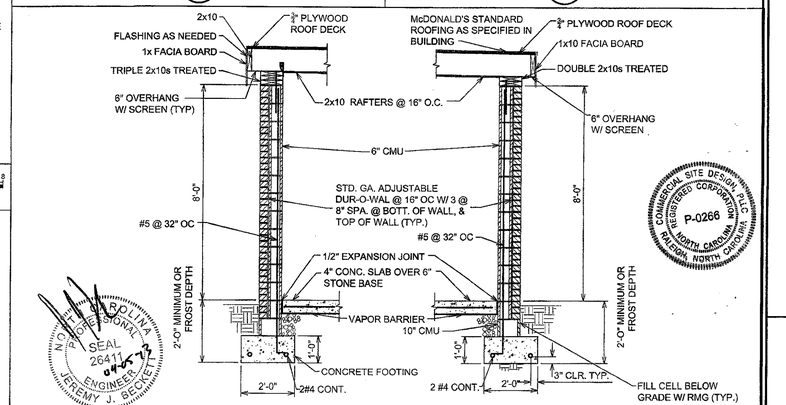

EXTERIOR WALL SECTIONS

SCALE: 3/8" = 1'-0"

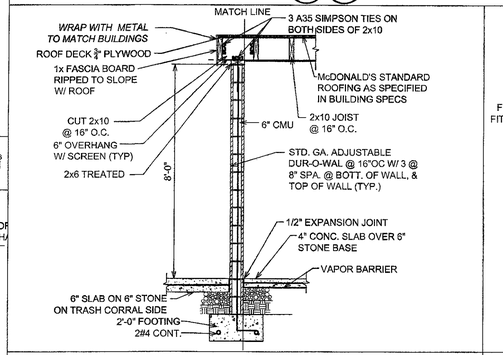

INTERIOR WALL SECTION

SCALE: 3/8" = 1'-0"

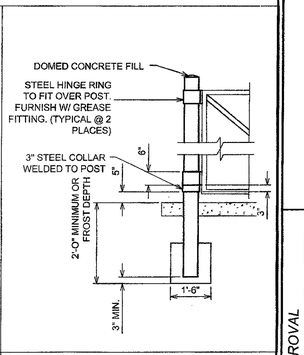

HINGE POST

SCALE: 3/8" = 1'-0"

FRONT ELEVATION

SCALE: 1/4" = 1'-0"

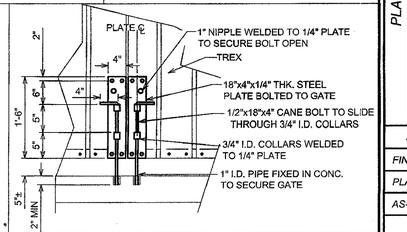

GATE HINGE

SCALE: 3" = 1'-0"

CANE BOLT

SCALE: 3/4" = 1'-0"

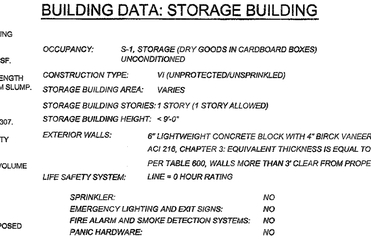

CONNECTION DETAIL

SCALE: 1" = 1'-0"

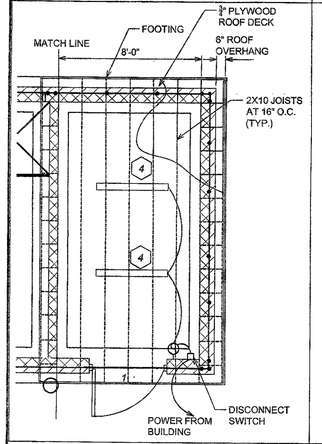

8' FRAMING PLAN

SCALE: 1/4" = 1'-0"

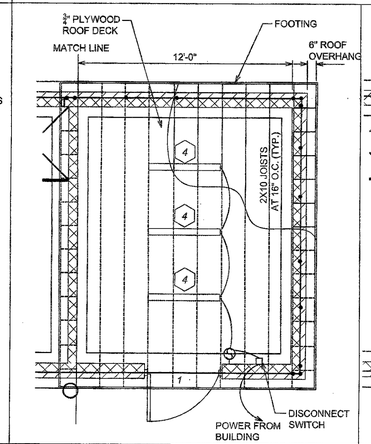

12' FRAMING PLAN

SCALE: 1/4" = 1'-0"

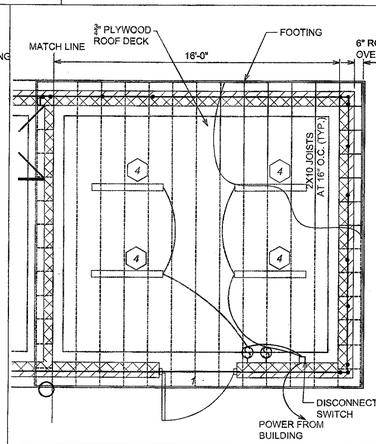

16' FRAMING PLAN

SCALE: 1/4" = 1'-0"

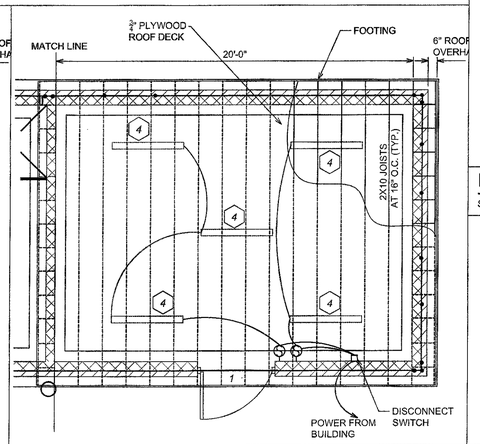

20' FRAMING PLAN

SCALE: 1/4" = 1'-0"

NORTH CAROLINA PROFESSIONAL SEAL 26411 ENGINEER JEREMY J. BECKER

REV	DATE	DESCRIPTION	BY	ISSUED?
1	12-12-12	PERMIT ISSUE	JWR	
2	1-16-13	CITY OF WILMINGTON COMMENTS	STH	
3	03-28-13	CITY OF WILMINGTON COMMENTS #2 & NCDOT.	JWR	

COMMERCIAL SITE DESIGN
(919) 846-4921, FAX: (919) 846-3741
WWW.CSITEDESIGN.COM
8512 CREEDMOOR ROAD
RALEIGH, NORTH CAROLINA 27613

COMMERCIAL SITE DESIGN, PLLC REGISTERED CORPORATION P-0266 NORTH CAROLINA RALEIGH, NORTH CAROLINA

McDonald's

THESE PLANS AND SPECIFICATIONS ARE THE PROPERTY OF McDONALD'S CORPORATION AND SHALL NOT BE REPRODUCED WITHOUT THEIR WRITTEN PERMISSION.

RALEIGH REGION
4801 SIX FORKS ROAD - SUITE 200 - RALEIGH, N.C. 27609

OFFICE
ADDRESS

PLAN APPROVAL

SIGNATURE (2 REQUIRED)	DATE
REGIONAL MGR.	
REGIONAL DEV. DIRECTOR	
REGIONAL CONSTRUCTION MGR.	
REGIONAL REAL ESTATE MGR.	

CO-SIGN SIGNATURES

AREA CONSTRUCTION MGR.	
CONTRACTOR	

STATUS	DATE	BY
FINAL	-	-
PLAN CHECKED	-	-
AS-BUILT	-	-

TC-1

TRASH DUMPSTER ENCLOSURE / STORAGE BUILDING (BRICK)

C:\MCD - McDonalds\1216 - Wilmington, NC @ Carolina Beach Rd 32-0062\CAD\MCD1216-TC.dwg, 4/1/2013 3:22:45 PM, janer