CONSTRUCTION DOCUMENTS
FOR:

MAYFAIRE COMMUNITY CENTER PHASE II LOT 1-R

SEPTEMBER, 2013

6800 PARKER FARM ROAD
WILMINGTON, NORTH CAROLINA
NEW HANOVER COUNTY

SHEET INDEX

C1.0	COVER SHEET
C2.0	EXISTING CONDITIONS PLAN
C2.1	DEMOLITION PLAN
C3.0	OVERALL SITE PLAN
C3.1	SITE PLAN
C3.1A	AUTO TURN PLAN
C3.2	STRIPING PLAN
C3.3	SITE DETAILS
C4.0	GRADING PLAN
C4.1	OVERALL WATERSHED PLAN
C4.2	DRAINAGE AREA PLAN
C4.3	STORM DRAINAGE PLAN
C4.4	STORM DRAINAGE PROFILES
C4.5	STORM DRAINAGE PROFILES
C4.6	STORM DRAINAGE DETAILS
C5.0	EROSION CONTROL PLAN - PHASE 1
C5.1	EROSION CONTROL PLAN - PHASE 2
C5.2	EROSION CONTROL DETAILS
C6.0	WATER DISTRIBUTION PLAN
C6.1	WATER DISTRIBUTION DETAILS
C6.2	SANITARY SEWER PLAN
C6.3	SANITARY SEWER DETAILS
C7.0	LANDSCAPE PLAN
C7.1	LANDSCAPE DETAILS

UTILITY CONTACTS

SEWER:
CAPE FEAR PUBLIC
UTILITY AUTHORITY
(910)799-6064

ELECTRIC:
PROGRESS ENERGY
SID LIVINGSTON
(910)350-3425

PHONE:
BELL SOUTH
STEVE DAYVAULT
(910)392-8712

GAS:
PIEDMONT
NATURAL GAS
JOYCE MIDGETT
(910)617-3155

WATER:
CAPE FEAR PUBLIC
UTILITY AUTHORITY
(910)799-6064

CABLE:
TIME WARNER CABLE

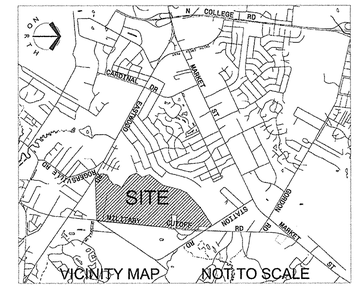

VICINITY MAP NOT TO SCALE

DEVELOPER
MAYFAIRE I,LLC
6835 CONSERVATION WAY
WILMINGTON, NC 28405
(910) 256-5131
CONTACT: DAN RAHE

CIVIL ENGINEER
LAND DESIGN INC.
223 N. GRAHAM ST.
CHARLOTTE, NC 28202
(704) 333-0325
CONTACT: ROBB KLAUK

SURVEYOR
MIKE UNDERWOORD & ASSOCIATES, P.A.
102 CINEMA DRIVE
SUITE C
WILMINGTON, NC 28403
(910) 815-0650
CONTACT: WARREN CURTIS

CITY OF WILMINGTON NORTH CAROLINA
Public Services Engineering Division
APPROVED STORMWATER MANAGEMENT PLAN
Date:_____ Permit #_____
Signed: _____

Approved Construction Plan

	Name	Date
Planning		
Traffic		
Fire		

LandDesign.
223 N Graham Street Charlotte, NC 28202
V: 704.333.0325 F: 704.332.3246
www.LandDesign.com
License #C-0658

LANDDESIGN, INC. CORPORATE SEAL NORTH CAROLINA

NORTH CAROLINA PROFESSIONAL SEAL 37425 ENGINEER ROBERT A. KLAUK
10-3-13

MAYFAIRE
COMMUNITY CENTER PHASE II, LOT 1-R
MAYFAIRE I, LLC; WILMINGTON, NC
Cover Sheet

REVISIONS:
10/3/13 - REVISED PER TRC COMMENTS

DATE: SEPTEMBER 17, 2013
DESIGNED BY: RAK
DRAWN BY: RPG
CHECKED BY: RJK
Q.C. BY: RAK
SCALE: NTS
PROJECT #: 101313B

SHEET #: C1.0

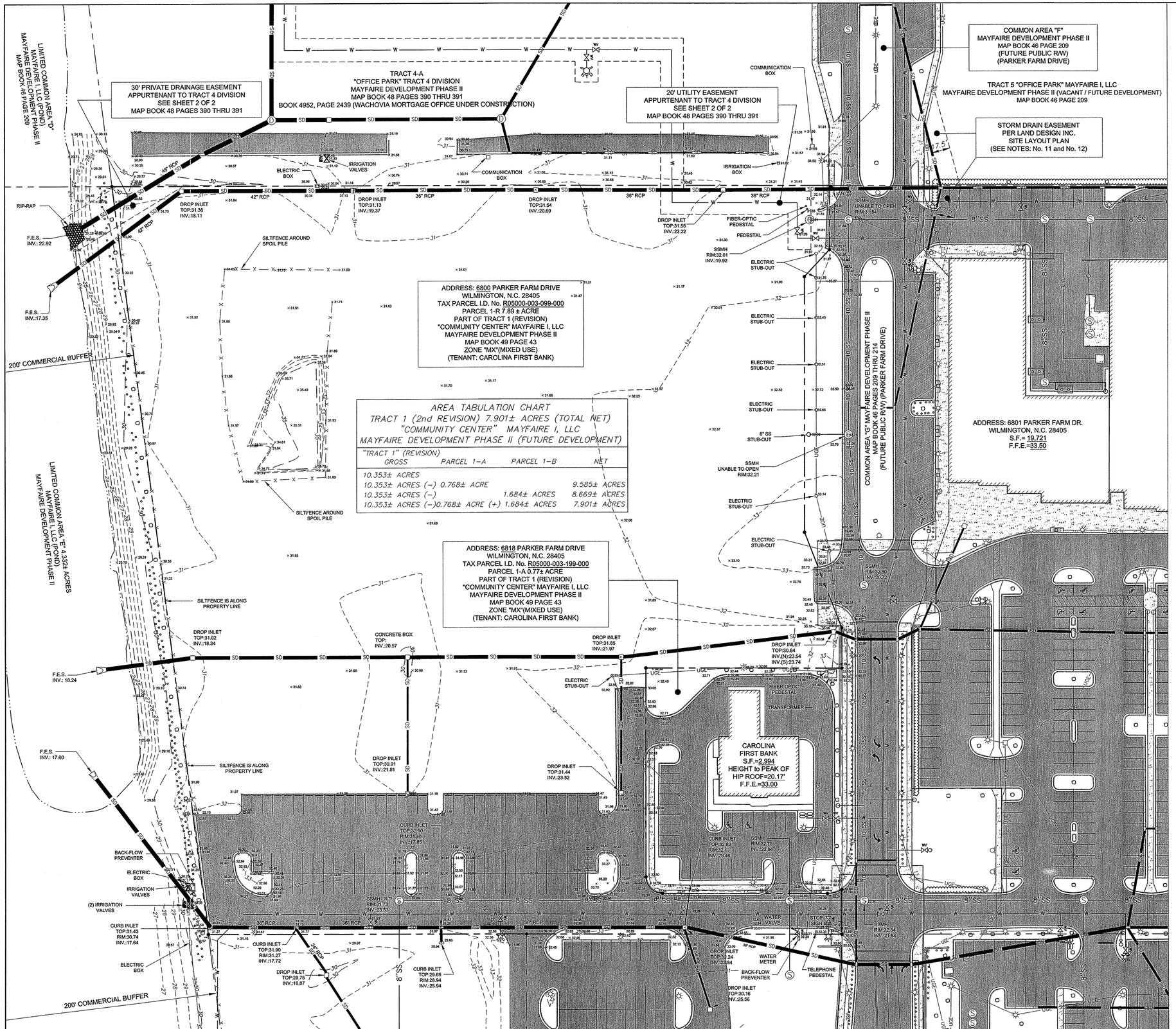

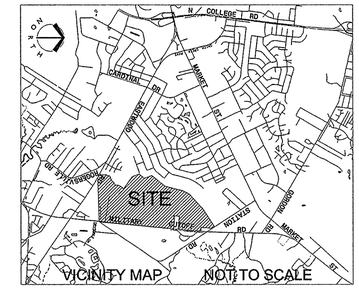

BEFORE YOU DIG! CALL 1-800-632-4949 N.C. ONE-CALL CENTER IT'S THE LAW!

LandDesign
223 N Graham Street Charlotte, NC 28202
V: 704.333.0325 F: 704.332.3246
www.LandDesign.com
License #C-0638

LANDDESIGN, INC. CORPORATE SEAL NORTH CAROLINA

MAYFAIRE COMMUNITY CENTER PHASE II, LOT 1-R

MAYFAIRE I, LLC; WILMINGTON, NC

Existing Conditions Plan

REVISIONS:
10/3/13 - REVISED PER TRC COMMENTS

DATE: SEPTEMBER 17, 2013
DESIGNED BY: RAK
DRAWN BY: ETB
CHECKED BY: RJK
QC BY: HPG
SCALE: 1"=40'
PROJECT #: 1013138

SHEET #: C2.0

N:_2013\1013138\CAD\Construction Documents\8040EX-COND.dwg, Existing Conditions Plan, 10/3/2013 2:45:15 PM, rkeidel, LandDesign, Inc.

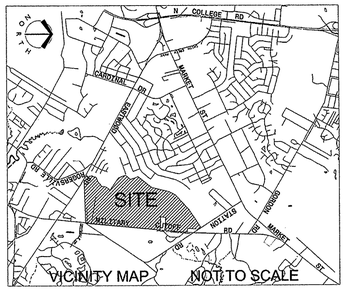

SITE NOTES:

1. EXISTING SITE CONDITIONS SHALL BE VERIFIED PRIOR TO CONSTRUCTION. THE CONTRACTOR SHALL REPORT ANY DIFFERENCES FROM THE PLAN THAT WILL AFFECT CONSTRUCTION, IN WRITING, TO THE ENGINEER AND AWAIT FURTHER INSTRUCTIONS.

2. ALL EXISTING CURBS AND PAVEMENT, TO REMAIN, SHALL BE PROTECTED FROM CONSTRUCTION DAMAGE. ALL DAMAGED, CHIPPED OR CRACKED PORTIONS OF CURB OR PAVEMENT SHALL BE REPLACED. IN ADDITION, ANY MORTAR, CONCRETE, SOIL AND OTHER DEPOSITS OR STAINS SHALL BE CLEANED TO RETURN THE CURBS TO THEIR ORIGINAL CONDITION.

3. DIMENSIONS ARE TO EDGE OF PAVEMENT OR FACE OF CURB.

DEMOLITION NOTES:

1. CONDUCT SITE DEMOLITION OPERATIONS TO ENSURE MINIMUM INTERFERENCE WITH ROADS, STREETS, WALKS, AND OTHER ADJACENT OCCUPIED OR USED FACILITIES. DO NOT CLOSE OR OBSTRUCT STREETS, WALKS OR OTHER OCCUPIED OR USED FACILITIES WITHOUT PERMISSION FROM AUTHORITIES HAVING JURISDICTION.

2. RESTORE DAMAGED IMPROVEMENTS TO THEIR ORIGINAL CONDITION, AS ACCEPTABLE TO PARTIES HAVING JURISDICTION.

3. DEMOLISH AND COMPLETELY REMOVE FROM SITE MATERIAL INDICATED ON PLAN OR NOTES "TO BE REMOVED".

4. PROTECT STRUCTURES, UTILITIES, SIDEWALKS, PAVEMENTS, AND OTHER FACILITIES FROM DAMAGE CAUSED BY SETTLEMENT, LATERAL MOVEMENT, UNDERMINING, WASHOUT AND OTHER HAZARDS CREATED BY THE DEMOLITION OPERATION.

5. CONTRACTOR SHALL MAINTAIN STORMWATER MANAGEMENT SYSTEM DURING CONSTRUCTION TO INSURE NO DAMAGE TO ADJACENT PROPERTIES OCCURS DURING STORM EVENTS.

6. CONTRACTOR TO REMOVE ALL VISIBLE OR REASONABLY IDENTIFIABLE MATERIAL, EQUIPMENT, ETC. FROM THE SITE IF NOT NEEDED FOR NEW CONSTRUCTION.

7. THE LOCATION OF ALL UTILITIES SHOWN ON THE PLANS HAVE BEEN DETERMINED FROM AVAILABLE INFORMATION AND ARE GIVEN FOR THE CONVENIENCE OF THE CONTRACTOR. THE ENGINEER AND OWNER ASSUME NO RESPONSIBILITY FOR INACCURACY.

8. ALL DEMOLITION AND CONSTRUCTION SHALL COMPLY WITH APPLICABLE BUILDING CODES AND LOCAL RESTRICTIONS. THE CONTRACTOR MUST COMPLY WITH ALL OF THE CONTRACTOR REGISTRATION REQUIREMENTS OF ALL GOVERNING AUTHORITIES.

9. PRIOR TO THE COMMENCEMENT OF DEMOLITION, THE CONTRACTOR WILL COORDINATE HIS ACTIVITIES WITH ALL UTILITY COMPANIES SERVING THIS AREA. THE CONTRACTOR IS TO COORDINATE FULLY WITH THE UTILITY COMPANIES ON THE EXACT LOCATION OF ALL UNDERGROUND UTILITIES PRIOR TO EXCAVATION.

10. MINIMUM DEPTH FOR REMOVAL OF ALL OBJECTS SHALL BE TWO (2) FEET BELOW GRADE. THE CONTRACTOR IS RESPONSIBLE FOR PROPER DISPOSAL OF ALL WASTE MATERIAL.

11. ALL PAVING REMOVAL AND DEMOLITION SHALL BE PERFORMED AS SHOWN ON THE PLANS OR AS DIRECTED BY THE ENGINEER OR OWNER.

12. ALL PROPOSED PAVEMENT CUTS SHALL BE SAW CUT ONLY.

13. CONTRACTOR SHALL PROVIDE A MINIMUM OF 72 HOURS ADVANCE NOTICE TO THE OWNER PRIOR TO STARTING DEMOLITION ACTIVITIES.

14. NO EQUIPMENT IS ALLOWED ON SITE UNTIL ALL TREE PROTECTION FENCING AND SILT FENCING IS INSTALLED AND APPROVED. PROTECTIVE FENCING IS TO BE MAINTAINED THROUGHOUT THE DURATION OF THE PROJECT AND CONTRACTORS SHALL RECEIVE ADEQUATE INSTRUCTION ON TREE PROTECTION METHODS.

15. STOP SIGNS AND STREET SIGNS TO REMAIN IN PLACE DURING CONSTRUCTION

16. A UTILITY CUT PERMIT IS REQUIRED FOR EACH OPEN CUT OF A CITY STREET

17. CONTRACTOR SHALL MAINTAIN ALL-WEATHER ACCESS FOR EMERGENCY VEHICLES AT ALL TIMES DURING CONSTRUCTION

18. NO OBSTRUCTIONS ARE PERMITTED IN THE SPACE BETWEEN THIRTY (30) INCHES AND TEN (10) FEET ABOVE THE GROUND WITHIN THE TRIANGULAR SIGHT DISTANCE

DEMOLITION TOTALS:

ASPHALT: 45,310 SQ. FT.

CURB & GUTTER: 760 L.F.

LEGEND

POWER	
GAS	
WATER	
TELEPHONE	
FENCE	
SEWER	

BEFORE YOU DIG!
CALL 1-800-632-4949
N.C. ONE-CALL CENTER
IT'S THE LAW!

LandDesign
223 N Graham Street Charlotte, NC 28202
V: 704.333.0325 F: 704.332.3246
www.LandDesign.com
License #C-0658

LANDDESIGN, INC. CORPORATE SEAL NORTH CAROLINA

NORTH CAROLINA PROFESSIONAL SEAL 37425 ENGINEER RICHARD A. KEIDEL
10-3-13

MAYFAIRE COMMUNITY CENTER PHASE II, LOT I-R

MAYFAIRE I, LLC; WILMINGTON, NC

Demolition Plan

REVISIONS:
10/2/13 - REVISED PER TRC COMMENTS

DATE: SEPTEMBER 17, 2013
DESIGNED BY: RAK
DRAWN BY: RBC
CHECKED BY: RIK
Q.C. BY: RAK
SCALE: 1"=40'
PROJECT #: 1013138

SHEET #: C2.1

N:_2013\1013138\CAD\Construction Documents\8040demo.dwg, Demolition Plan, 10/3/2013 2:45:06 PM, rkeidel, LandDesign, Inc.

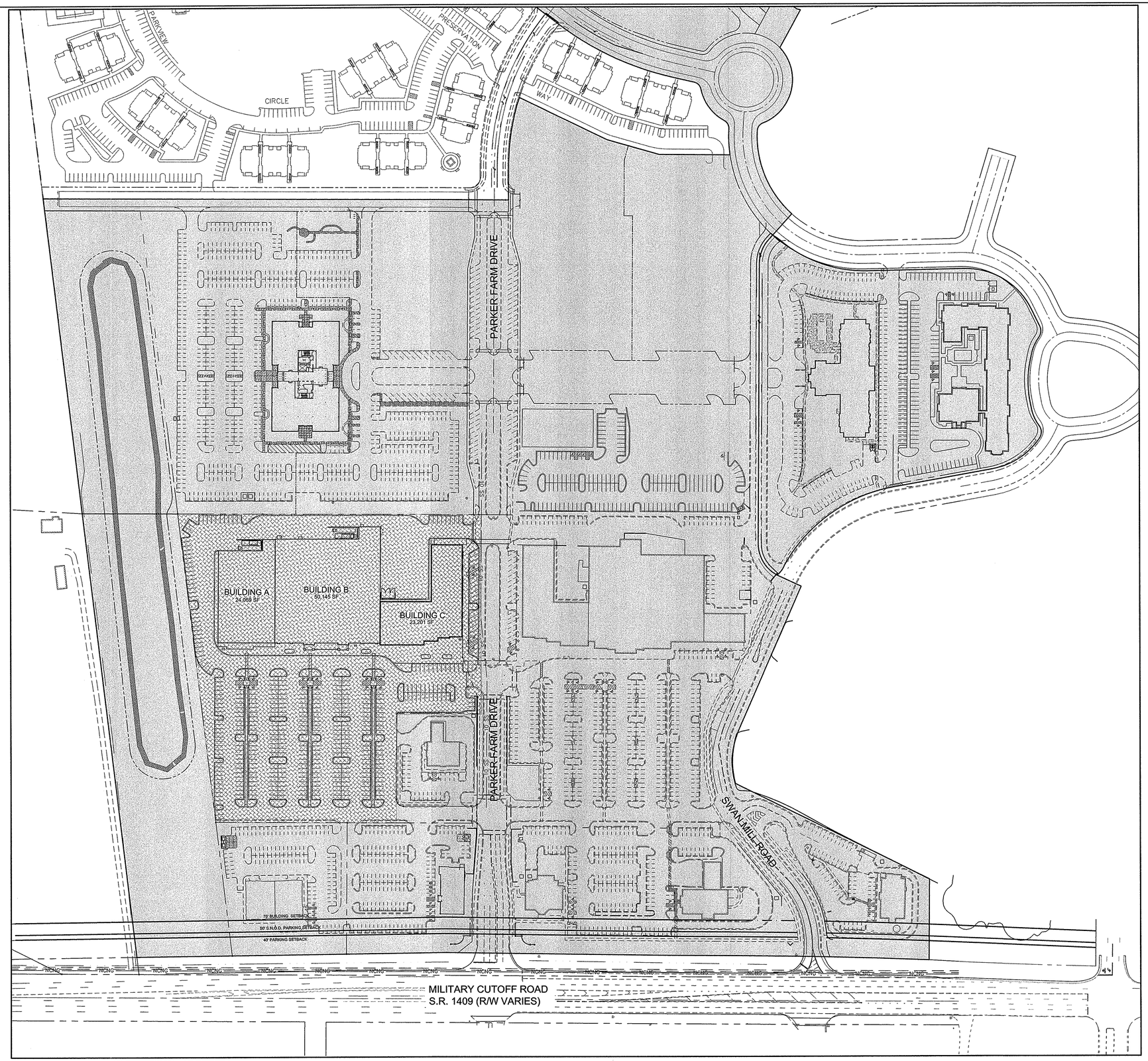

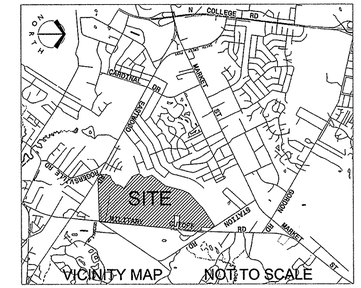

KEY

EXISTING MAYFAIRE DEVELOPMENT

PROPOSED MAYFAIRE DEVELOPMENT

GENERAL NOTES

1. A RECORD PLAT OF ALL PERMANENT EASEMENT MUST BE FILED PRIOR TO THE ISSUE OF CERTIFICATE OF OCCUPANCY.
2. ALL COORDINATE DATA IS REFERENCED TO A NORTH/SOUTH, EAST/WEST GRID. AN AUTOCAD R14 SITE PLAN IS AVAILABLE AT THE REQUEST OF THE STAKING SURVEYOR. (910) 692-2788
3. CIVIL ENGINEER & CONTRACTOR SHALL VERIFY THAT ALL BUILDINGS ARE OUTSIDE ALL BUFFERS AND SETBACKS AS SHOWN.
4. SURVEYOR SHALL REPORT ANY ENCROACHMENTS OR DISCREPANCIES GENERATED BY THIS STAKING PLAN IMMEDIATELY TO LANDDESIGN, INC. FOR DECISION.
5. SURVEYOR SHALL CONTACT LANDDESIGN, INC. AND OWNER IMMEDIATELY UPON COMPLETION OF FIELD STAKING PRIOR TO CONSTRUCTION.
6. CONTRACTOR SHALL OBTAIN ALL NECESSARY SIGNAGE PERMITS FROM CITY OF WILMINGTON BUILDING STANDARDS DEPT. PRIOR TO CONSTRUCTION.
7. NOTE TO CONTRACTOR: WETLANDS TO BE CLEARLY MARKED ACCORDING TO APPROVED PLANS AND SPECIFICATIONS PRIOR TO CONSTRUCTION TO PREVENT ACCIDENTIAL DAMAGE TO WETLANDS. CONTRACTOR TO BE HELD RESPONSIBLE FOR UNAUTHORIZED WETLAND DAMAGE NOT PERMITTED ACCORDING TO PLANS AND SPECIFICATIONS.
8. ALL DIMENSIONS ARE FROM THE FACE OF CURB UNLESS OTHERWISE NOTED.
9. ALL CURB RADII NOT DIMENSIONED ON PLAN SHALL ASSUME MINIMUM STANDARDS FOR THE CITY OF WILMINGTON. 5' RADIUS FROM THE FACE OF CURB (4.5' FROM BACK OF CURB) REFERENCE CITY STANDARDS MANUAL FOR ILLUSTRATIONS.
10. ALL SIDEWALKS SHALL BE FIELD STAKED FOR APPROVAL BY THE LANDSCAPE ARCHITECT/ OWNER. ALL SIDEWALKS SHALL BE 5' IN WIDTH THROUGHOUT UNLESS OTHERWISE NOTED.
11. ALL SIDEWALKS SHALL MAINTAIN A 3' RADIUS UNLESS OTHERWISE NOTED
12. REFERENCE ARCHITECTURAL PLANS FOR BUILDING FOOTPRINT DIMENSIONS OF ALL BUILDINGS.
13. ALL SIDEWALKS AND HANDICAP RAMPS SHALL MEET A.D.A. STANDARDS AND SPECIFICATIONS.
14. REFERENCE BOUNDARY AND TOPOGRAPHY SURVEY FOR STAKING POB. MIKE UNDERWOOD & ASSOCIATES (910) 815-0605
15. REFERENCE WETLAND SURVEY FOR ALL WETLAND COORDINATE LOCATIONS. HANOVER DESIGN (910) 343-8002
16. HANDICAP RAMP LOCATIONS ARE TO BE DETERMINED BY FINAL DOORWAY LOCATION IN CONJUCTION WITH HANDICAP PARKING
17. REFER TO ARCHITECTURAL PLANS FOR ALL BUILDING AND SERVICE AREA DIMENSIONS.
18. ALL UTILITIES PUBLIC AND PRIVATE TO BE INSTALLED UNDERGROUND.

NOTES:
OVERALL SITE PLAN IS FOR REFERENCE ONLY. REFER TO COMMUNITY CENTER SITE PLAN FOR ALL MX ORDINANCE COMPLIANCE.

NORTH

50 0' 50 100 200

BEFORE YOU DIG!
CALL 1-800-632-4949
N.C. ONE-CALL CENTER
IT'S THE LAW!

LandDesign.™
223 N Graham Street Charlotte, NC 28202
V: 704.333.0325 F: 704.332.3246
www.landdesign.com
License #C-0658

LANDDESIGN, INC. CORPORATE SEAL NORTH CAROLINA

NORTH CAROLINA PROFESSIONAL SEAL 37425 ENGINEER ROBERT KEITH KELDEL
10-3-13

MAYFAIRE
COMMUNITY CENTER PHASE II, LOT I-R
MAYFAIRE I, LLC; WILMINGTON, NC

Overall Site Plan

REVISIONS:
10/3/13 - REVISED PER TRC COMMENTS

DATE: SEPTEMBER 17, 2013
DESIGNED BY: BAK
DRAWN BY: RPG
CHECKED BY: RJK
QC BY: KAK
SCALE: 1"=100'
PROJECT #: 1013138

SHEET #:
C3.0

N:_2013\1013138\CAD\Construction Documents\8040overallsite.dwg, Overall Site Plan, 10/3/2013 2:44:55 PM, rkeldel, LandDesign, Inc.

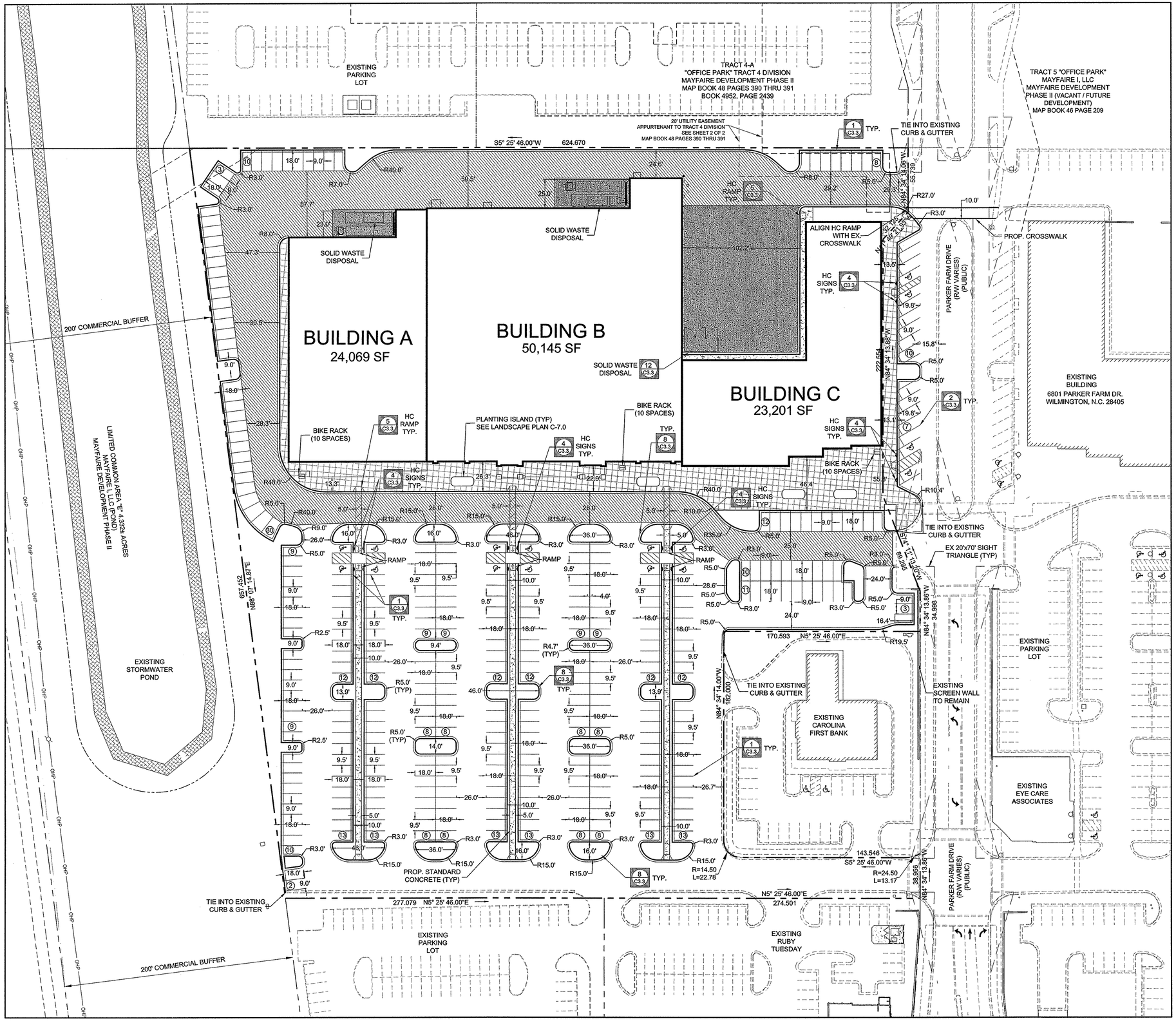

GENERAL NOTES

1. A RECORD PLAT OF ALL PERMANENT EASEMENT MUST BE FILED PRIOR TO THE ISSUE OF CERTIFICATE OF OCCUPANCY.
2. ALL COORDINATE DATA IS REFERENCED TO A NORTH/SOUTH, EAST/WEST GRID. AN AUTOCAD R14 SITE PLAN IS AVAILABLE AT THE REQUEST OF THE STAKING SURVEYOR. (910) 692-2788
3. CIVIL ENGINEER & CONTRACTOR SHALL VERIFY THAT ALL BUILDINGS ARE OUTSIDE ALL BUFFERS AND SETBACKS AS SHOWN.
4. SURVEYOR SHALL REPORT ANY ENCROACHMENTS OR DISCREPANCIES GENERATED BY THIS STAKING PLAN IMMEDIATELY TO LANDDESIGN, INC. FOR DECISION.
5. SURVEYOR SHALL CONTACT LANDDESIGN, INC. AND OWNER IMMEDIATELY UPON COMPLETION OF FIELD STAKING PRIOR TO CONSTRUCTION.
6. CONTRACTOR SHALL OBTAIN ALL NECESSARY SIGNAGE PERMITS FROM CITY OF WILMINGTON BUILDING STANDARDS DEPT. PRIOR TO CONSTRUCTION.
7. NOTE TO CONTRACTOR: WETLANDS TO BE CLEARLY MARKED ACCORDING TO APPROVED PLANS AND SPECIFICATIONS PRIOR TO CONSTRUCTION TO PREVENT ACCIDENTIAL DAMAGE TO WETLANDS. CONTRACTOR TO BE HELD RESPONSIBLE FOR UNAUTHORIZED WETLAND DAMAGE NOT PERMITTED ACCORDING TO PLANS AND SPECIFICATIONS.
8. ALL DIMENSIONS ARE FROM THE FACE OF CURB UNLESS OTHERWISE NOTED.
9. ALL CURB RADII NOT DIMENSIONED ON PLAN SHALL ASSUME MINIMUM STANDARDS FOR THE CITY OF WILMINGTON. 5' RADIUS FROM THE FACE OF CURB (4.5' FROM BACK OF CURB) REFERENCE CITY STANDARDS MANUAL FOR ILLUSTRATIONS.
10. ALL SIDEWALKS SHALL BE FIELD STAKED FOR APPROVAL BY THE LANDSCAPE ARCHITECT/ OWNER. ALL SIDEWALKS SHALL BE 5' IN WIDTH THROUGHOUT UNLESS OTHERWISE NOTED.
11. ALL SIDEWALKS SHALL MAINTAIN A 3' RADIUS UNLESS OTHERWISE NOTED.
12. REFERENCE ARCHITECTURAL PLANS FOR BUILDING FOOTPRINT DIMENSIONS OF ALL BUILDINGS.
13. ALL SIDEWALKS AND HANDICAP RAMPS SHALL MEET A.D.A. STANDARDS AND SPECIFICATIONS.
14. TACTILE WARNING MATS WILL BE INSTALLED ON ALL WHEELCHAIR RAMPS
15. REFERENCE BOUNDARY AND TOPOGRAPHY SURVEY FOR STAKING POB. MIKE UNDERWOOD & ASSOCIATES (910) 815-0605
16. REFERENCE WETLAND SURVEY FOR ALL WETLAND COORDINATE LOCATIONS. HANOVER DESIGN (910) 343-8002
17. HANDICAP RAMP LOCATIONS ARE TO BE DETERMINED BY FINAL DOORWAY LOCATION IN CONJUCTION WITH HANDICAP PARKING.
18. REFER TO ARCHITECTURAL PLANS FOR ALL BUILDING AND SERVICE AREA DIMENSIONS.
19. ALL UTILITIES PUBLIC AND PRIVATE TO BE INSTALLED UNDERGROUND.
20. CONTACT TRAFFIC ENGINEERING AT 341-7888 TO DISCUSS STREET LIGHTING OPTIONS.
21. THE PROCESS FOR TELEPHONE CABLE PLACEMENT:
    - FINAL GRADE WILL NEED TO BE ESTABLISHED
    - POWER WILL PLACE THEIR CABLE FIRST - APROX. 3 FT DEEP
    - BELL SOUTH/CABLE TV WILL THEN PLACE THEIR CABLE APPROX. 2 FT DEEP
22. ALL PROPOSED VEGETATION WITHIN SITE TRANGLES SHALL NOT INTERFERE WITH CLEAR VISUAL SIGHT LINES FROM 30'-10'

SITE DATA:

PROJECT ADDRESS:	6800 Parker Farm Road
PIN NUMBER:	#R05000-003-0099-000
CAMA LAND USE:	WATERSHED RESOURCE PROTECTION
BUILDING CONSTRUCTION TYPE:	II-B
ZONING DISTRICT:	MX
OVERLAY DISTRICT:	N/A
SITE AREA:	8.08 AC (7.89 ACRES ON-SITE, 0.19 ACRES OFF-SITE)
EXISTING IMPERVIOUS AREA:	50,665 SF
PROPOSED IMPERVIOUS AREA:	326,107 SF = 92.65%
PROPOSED BUILDING AREA:	97,415 SF = 27.68%
MAX BUILDING HEIGHT:	30' ONE STORY BUILDING

PARKING DATA:

EXISTING PARKING:	86 SPACES (TO BE REMOVED)
PROVIDED TOTAL PARKING:	384 SPACES
PROVIDED HANDICAP PARKING:	16 SPACES
REQUIRED BICYCLE PARKING:	25 SPACES
PROVIDED BICYCLE PARKING:	30 SPACES

WATER AND SEWER CAPACITY NEEDS:

WATER (CURRENT USE):	0 GPD
WATER (PROPOSED USE):	9,742 GPD = (97,415 SF * 100 gal/1000 sf)
SEWER (CURRENT USE):	0 GPD
SEWER (PROPOSED USE):	9,742 GPD = (97,415 SF * 100 gal/1000 sf)

UTILITY DATA:

EXISTING SEWER:	CFPUA
EXISTING WATER:	CFPUA
PROPOSED SEWER:	CFPUA
PROPOSED WATER:	CFPUA

20 0' 20 40 80

LandDesign.
223 N Graham Street Charlotte, NC 28202
V: 704.333.0325 F: 704.332.3246
www.LandDesign.com
License #C-0658

LANDDESIGN, INC. CORPORATE SEAL NORTH CAROLINA

NORTH CAROLINA PROFESSIONAL SEAL 37425 ENGINEER RICHARD A. KEIDEL 10-3-13

MAYFAIRE COMMUNITY CENTER PHASE II, LOT I-R

MAYFAIRE I, LLC; WILMINGTON, NC

Site Plan

REVISIONS:
10/3/13 - REVISED PER TRC COMMENTS

DATE: SEPTEMBER 17, 2013
DRAWN BY: RAK
REVIEWED BY: RGS
CHECKED BY: RJK
Q.C. BY: RAK
SCALE: 1" = 40'
PROJECT #: 1013138

SHEET #:
C3.1

N:_2013\1013138\CAD\Construction Documents\8040Site.dwg, Site Plan, 10/3/2013 2:44:45 PM, rkeidel, LandDesign, Inc.

EXISTING PARKING LOT

TRACT 4-A
"OFFICE PARK" TRACT 4 DIVISION
MAYFAIRE DEVELOPMENT PHASE II
MAP BOOK 48 PAGES 390 THRU 391
BOOK 4952, PAGE 2439

TRACT 5 "OFFICE PARK"
MAYFAIRE I, LLC
MAYFAIRE DEVELOPMENT
PHASE II (VACANT / FUTURE DEVELOPMENT)
MAP BOOK 46 PAGE 209

200' COMMERCIAL BUFFER

LIMITED COMMON AREA "E" 4.932± ACRES
MAYFAIRE I, LLC (POND)
MAYFAIRE DEVELOPMENT PHASE II

EXISTING STORMWATER POND

BUILDING A
24,069 SF

BUILDING B
50,145 SF

BUILDING C
23,201 SF

PARKER FARM DRIVE
(R/W VARIES)
(PUBLIC)

WB-65

EXISTING BUILDING
6801 PARKER FARM DR.
WILMINGTON, N.C. 28405

EXISTING PARKING LOT

EXISTING CAROLINA FIRST BANK

EXISTING EYE CARE ASSOCIATES

15' 0' 15' 30' 60'

NORTH

BEFORE YOU DIG!
CALL 1-800-632-4949
N.C. ONE-CALL CENTER
IT'S THE LAW!

LandDesign.
223 N. Graham Street Charlotte, NC 28202
V: 704.333.0325 F: 704.332.3646
www.LandDesign.com
License #C-0658

LANDDESIGN, INC. CORPORATE SEAL NORTH CAROLINA

NORTH CAROLINA PROFESSIONAL SEAL 37425 ENGINEER
10-3-13

MAYFAIRE
COMMUNITY CENTER PHASE II, LOT I-R
MAYFAIRE I, LLC, WILMINGTON, NC

Auto Turn

REVISIONS:
10/3/13 - REVISED PER TRC COMMENTS

DATE: SEPTEMBER 17, 2013
DESIGNED BY: RAK
DRAWN BY: RPG
CHECKED BY: RJK
QC BY: RAK / CJ
SCALE: 1" = 30'
PROJECT #: 1013138

SHEET #:
C3.1A

N:_2013\1013138\CAD\Construction Documents\8040AutoTurn.dwg, Auto Turn, 10/3/2013 3:52:59 PM, rkeidel, LandDesign, Inc.

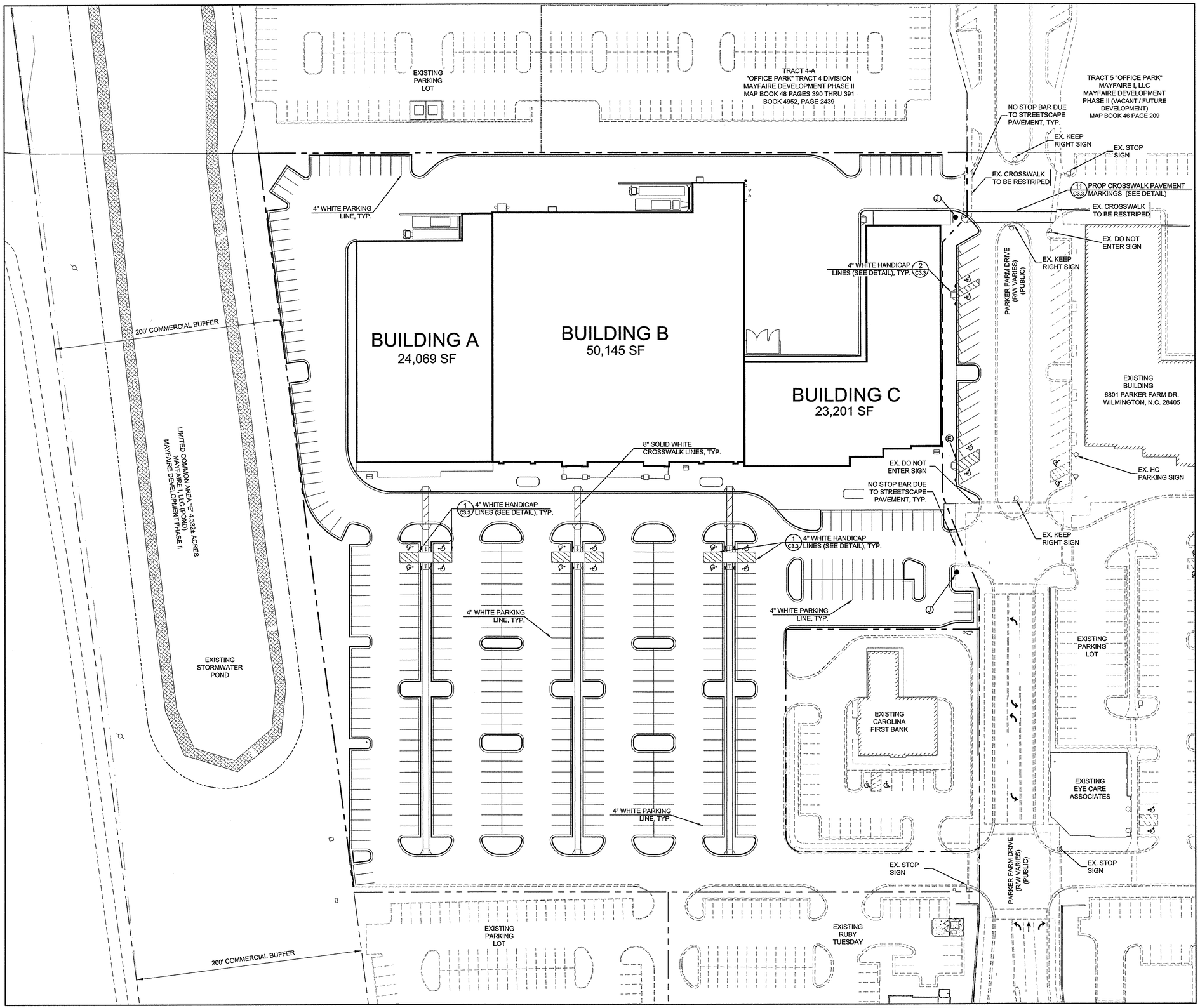

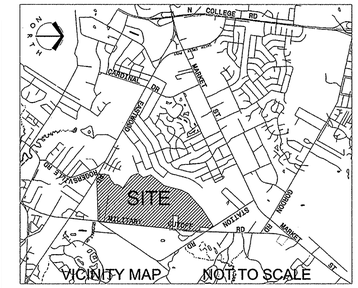

VICINITY MAP NOT TO SCALE

PAVEMENT MARKING AND SIGNAGE LOCATION SCHEDULE

SYMBOL	DESCRIPTION
	THERMOPLASTIC PAVEMENT MARKING LINES
A	(STOP BAR 24" WHITE, 120 MILS)
B	(BIKELANE)
	THERMOPLASTIC PAVEMENT MARKING SYMBOLS
C	(LEFT TURN ARROW, 90 MILS)
D	(RIGHT TURN ARROW, 90 MILS)
E	(STRAIGHT ARROW, 90 MILS)
F	(COMBINATION RIGHT OR LEFT TURN ARROW, 90 MILS)
G	("BIKE LANE", 90 MILS)
H	("ONLY" MESSAGE, 90 MILS)
	TRAFFIC CONTROL SIGNS
I	(BUS STOP SIGN R7-107 & R7-107A)
J	(STOP SIGN R1-1)
K	(YEILD SIGN R1-2)
L	(BIKE LANE SIGN R3-17)
M	(NO LEFT TURN R3-2)
N	(NO RIGHT TURN R3-1)
O	(KEEP RIGHT R4-7a)
P	(DO NOT ENTER R5-1)
Q	(STOP SIGN W/ ALL-WAY SUBPLATE R1-1 & R1-4)
R	(PEDESTRIAN CROSSING W DIAGONAL DOWNWARD POINTING ARROW SUBPLATE W11A-2 & W16-7P)

TRAFFIC CONTROL AND STRIPING LEGEND

	PERMANENT RIGHT THRU ARROW
	PERMANENT LEFT THRU ARROW
	PERMANENT RIGHT TURN ARROW
	PERMANENT THRU LANE ARROW
	PERMANENT LEFT TURN ARROW
E.O.P.	EDGE OF PAVEMENT
	SIGN POST
	24" WIDE WHITE STOP BAR NOTE: SETBACK DETERMINED BY TRAFFIC SIGNAL LOCATION
	4" WHITE SOLID LINE
30'	4" X 10' WHITE SKIP LINE (30' SPACING)
13'	4" X 2' WHITE MINI-SKIP LINE (13' SPACING)
	4" DOUBLE YELLOW LINES

PAVEMENT MARKING AND SIGN NOTES:

1. CONTRACTOR SHALL INSTALL ALL SIGNS, AND STRIPING IN CONFORMANCE WITH NCDOT STANDARDS AND THE "MANUAL OF UNIFORM TRAFFIC CONTROL DEVICES", LATEST EDITION.
2. TRAFFIC ENGINEERING MUST APPROVE OF PAVEMENT MARKINGS PRIOR TO ACTUAL STRIPING.
3. SEE LAYOUT SHEET C3.1 FOR TYPICAL PARKING STRIPING, HANDICAP & BIKE PAVEMENT MARKINGS.
4. SEE DETAIL SHEET C3.3 FOR TYPICAL LAYOUT AND STANDARDS OF PAVEMENT MARKING AND SIGN LOCATION.
5. SEE DETAIL SHEETS FOR SIGN DETAILS AND CROSSWALK PAVEMENT MARKINGS.
6. IT SHALL BE THE RESPONSIBILITY OF THE SUBDIVIDER TO ERECT OFFICIAL SIGNS AND STREET NAME SIGNS AT ALL INTERSECTIONS ASSOCIATED WITH THE SUBDIVISION IN ACCORDANCE WITH THE TECHNICAL STANDARDS AND SPECIFICATIONS MANUAL. THE SUBDIVIDER MAY ACQUIRE AND ERECT OFFICIAL STREET NAME SIGNS OR MAY CHOOSE TO CONTRACT WITH THE CITY TO INSTALL THE STREET NAME SIGNS AND THE SUBDIVIDER SHALL PAY THE COST OF SUCH INSTALLATION. CONTACT TRAFFIC ENGINEERING AT 341-7888 TO DISCUSS INSTALLATION OF TRAFFIC AND STREET NAME SIGNS. PROPOSED STREET NAMES MUST BE APPROVED PRIOR TO INSTALLATION OF STREET NAME SIGNS.
7. ALL PAVEMENT MARKINGS IN PUBLIC RIGHT-OF-WAY AND FOR DRIVEWAYS ARE TO BE THERMOPLASTIC AND MEET CITY AND/OR NCDOT STANDARDS.
8. ALL TRAFFIC CONTROL SIGNS AND MARKINGS OFF THE RIGHT-OF-WAY ARE TO BE MAINTAINED BY THE PROPERTY OWNER IN ACCORDANCE WITH MUTCD STANDARDS.
9. ALL SIGNS AND PAVEMENT MARKINGS IN AREAS OPEN TO PUBLIC TRAFFIC ARE TO MEET MUTCD
10. (MANUAL ON UNIFORM TRAFFIC CONTROL DEVICES) STANDARDS.
11. ALL TRAFFIC CONTROL SIGNS AND PAVEMENT MARKINGS IN AREAS OPEN TO PUBLIC TRAFFIC ARE TO MEET MUTCD STANDARDS.
12. ALL PAVEMENT MARKINGS REGULATING DIRECTIONAL TRAFFIC FLOW SHALL BE THERMOPLASTIC

CONTRACTOR'S PARKING AND PAVING NOTES:

1. ALL SIGNS, PAVEMENT MARKINGS AND OTHER TRAFFIC CONTROL DEVICES SHALL CONFORM TO THE NORTH CAROLINA MANUAL ON UNIFORM TRAFFIC CONTROL DEVICES. CALL TRAFFIC ENG. AT 341-7888 TO ENSURE THAT ALL TRAFFIC SIGNAL FACILITIES AND EQUIPMENT ARE SHOWN ON THE PLAN.
2. ALL PAVEMENT MARKINGS SHALL BE FOUR (4) INCHES WIDE SOLID WHITE UNLESS INDICATED OTHERWISE ON THE DRAWINGS.
3. A MINIMUM CLEARANCE OF TWO FEET SHALL BE MAINTAINED BETWEEN THE FACE OF CURB AND ANY PART OF A TRAFFIC SIGN OR LIGHT POLE.
4. CONTRACTOR SHALL FURNISH AND INSTALL ALL PAVEMENT MARKINGS AS SHOWN ON THE PLANS.
5. CONTRACTOR SHALL COORDINATE INSTALLATION OF ALL SIGNS, PAVEMENT MARKINGS, AND OTHER TRAFFIC CONTROL DEVICES WITH OTHER CONTRACTORS ON SITE.
6. CONTRACTOR SHALL SAW-CUT TO PROVIDE SMOOTH TRANSITIONS AT TIE-INS TO EXISTING EDGES OF PAVEMENT.
7. JOINTS OR SCORE MARKS ARE TO BE SHARP AND CLEAN WITHOUT SHOWING EDGES OF JOINTING TOOL.
8. CONTRACTOR SHALL SAW-CUT TIE-INS AT EXISTING CURBS AS NECESSARY TO ENSURE SMOOTH TRANSITIONS. CONTRACTOR SHALL SAW-CUT AND TRANSITION TO MEET EXISTING PAVEMENT AS NECESSARY AND AS DIRECTED BY INSPECTOR TO INSURE POSITIVE DRAINAGE. (TYPICAL @ ALL INTERSECTIONS).
9. CONTRACTOR SHALL COMPLY WITH ALL PERTINENT PROVISIONS OF THE "MANUAL OF ACCIDENT PREVENTION IN CONSTRUCTION" ISSUED BY AGC OF AMERICA, INC., AND THE SAFETY AND HEALTH REGULATIONS FOR CONSTRUCTION ISSUED BY THE U.S. DEPARTMENT OF LABOR.
10. ALL DIMENSIONS ARE TO FACE OF CURB UNLESS INDICATED OTHERWISE.
11. ALL WORK SHALL COMPLY WITH ALL APPLICABLE CODES, REGULATIONS, AND/OR LOCAL STANDARDS IMPOSED BY THE LOCAL UTILITY, AND THE CITY OF WILMINGTON, NORTH CAROLINA.
12. CALL TRAFFIC ENGINEERING AT 341-7888 FORTY-EIGHT HOURS PRIOR TO ANY EXCAVATION IN THE RIGHT OF WAY.
13. ANY BROKEN OR MISSING SIDEWALK PANELS, DRIVEWAY PANELS AND CURBING SHALL BE REPLACED.
14. TACTILE WARNING MATS ARE TO BE INSTALLED ON ALL WHEELCHAIR RAMPS.
15. A LANDSCAPING PLAN INDICATING THE LOCATION OF REQUIRED STREETS SHALL BE SUBMITTED TO THE CITY OF WILMINGTON TRAFFIC ENGINEERING DIVISION AND PARKS AND RECREATION DEPARTMENT FOR REVIEW AND APPROVAL PRIOR TO THE RECORDING OF THE FINAL PLAT.

NORTH

20 0' 20 40 80

BEFORE YOU DIG!
CALL 1-800-632-4949
N.C. ONE-CALL CENTER
IT'S THE LAW!

LandDesign.
223 N Graham Street Charlotte, NC 28202
V: 704.333.0325 F: 704.332.3246
www.landdesign.com
License #C-0658

LANDDESIGN, INC. CORPORATE SEAL NORTH CAROLINA

NORTH CAROLINA PROFESSIONAL SEAL 37425 ENGINEER
10-3-13

MAYFAIRE COMMUNITY CENTER PHASE II, LOT I-R

MAYFAIRE I, LLC; WILMINGTON, NC

Striping Plan

REVISIONS:
10/2/13 - REVISED PER TRC COMMENTS

DATE: SEPTEMBER 17, 2013
DESIGNED BY: RAK
DRAWN BY: RPG
CHECKED BY: RJK
QA BY: RAK
SCALE: 1"=40'
PROJECT #: 1013138

SHEET #:
C3.2

N:_2013\1013138\CAD\Construction Documents\80405tripping.dwg, Striping Plan, 10/3/2013 2:44:29 PM, rkeidel, LandDesign, Inc.

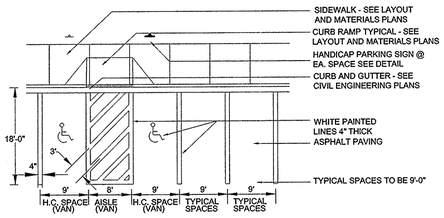

1 C3.3 **90 DEGREE PARKING SPACE DIMENSIONS**

NOT TO SCALE

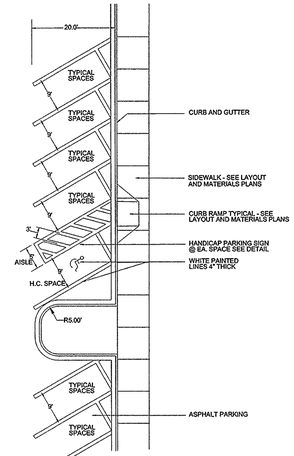

2 C3.3 **60 DEGREE PARKING DIMENSIONS**

NOT TO SCALE

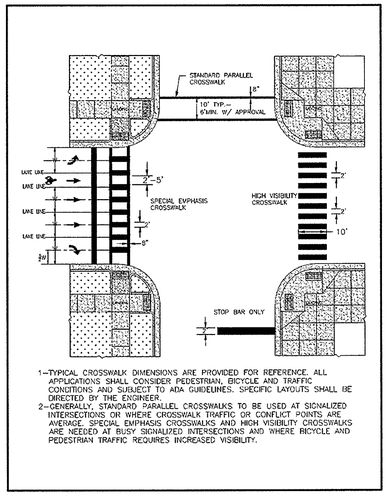

1-TYPICAL CROSSWALK DIMENSIONS ARE PROVIDED FOR REFERENCE. ALL APPLICATIONS SHALL CONSIDER PEDESTRIAN, BICYCLE AND TRAFFIC CONDITIONS AND SUBJECT TO ADA GUIDELINES. SPECIFIC LAYOUTS SHALL BE DIRECTED BY THE ENGINEER.
2-GENERALLY, STANDARD PARALLEL CROSSWALKS TO BE USED AT SIGNALIZED INTERSECTIONS OR WHERE CROSSWALK TRAFFIC OR CONFLICT POINTS ARE AVERAGE. SPECIAL EMPHASIS CROSSWALKS AND HIGH VISIBILITY CROSSWALKS ARE NEEDED AT BUSY SIGNALIZED INTERSECTIONS AND WHERE BICYCLE AND PEDESTRIAN TRAFFIC REQUIRES INCREASED VISIBILITY.

7 C3.3 **CROSSWALK PAVEMENT MARKINGS**

NOT TO SCALE

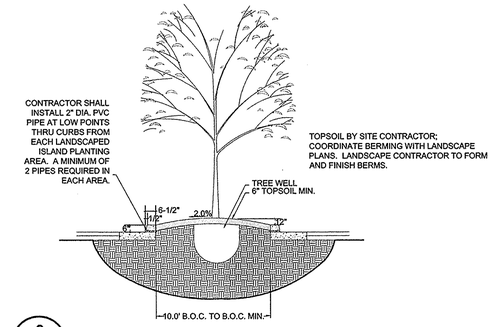

8 C3.3 **PARKING ISLAND SECTION**

NOT TO SCALE

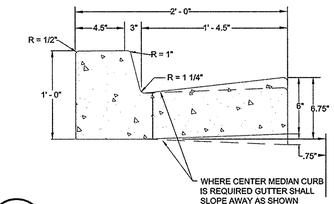

9 C3.3 **STANDARD CURB SECTION TYPE "A"**

NOT TO SCALE

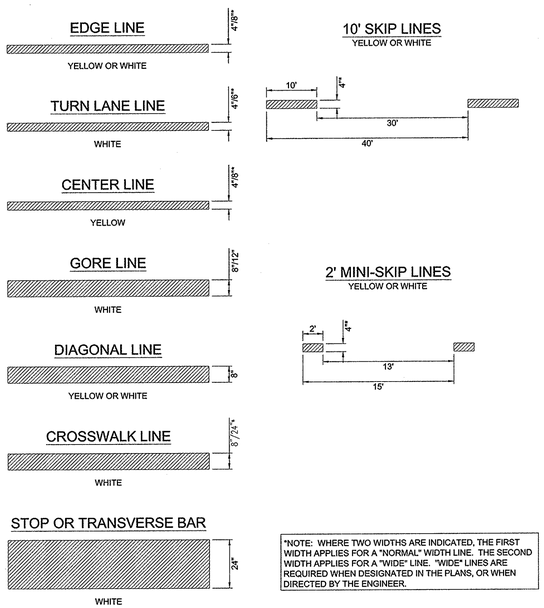

*NOTE: WHERE TWO WIDTHS ARE INDICATED, THE FIRST WIDTH APPLIES FOR A "NORMAL" WIDTH LINE. THE SECOND WIDTH APPLIES FOR A "WIDE" LINE. "WIDE" LINES ARE REQUIRED WHEN DESIGNATED IN THE PLANS, OR WHEN DIRECTED BY THE ENGINEER.

3 C3.3 **PAVEMENT MARKINGS LINE TYPES**

NOT TO SCALE

ACCESSIBLE PARKING REQUIREMENTS

TOTAL PARKING SPACES PROVIDED	MINIMUM NUMBER OF ACCESSIBLE SPACES REQUIRED	MINIMUM NUMBER OF ACCESSIBLE SPACES REQUIRED TO BE VAN ACCESSIBLE
1 TO 25	1	1
26 TO 50	2	1
51 TO 75	3	1
76 TO 100	4	1
101 TO 150	5	1
151 TO 200	6	1
201 TO 300	7	1
301 TO 400	8	1
401 TO 500	9	2
501 TO 1000	2% OF TOTAL	1 IN EVERY 8 ACCESSIBLE SPACES
1001 AND OVER	20 PLUS 1 FOR EACH 100 OVER 1000	1 IN EVERY 8 ACCESSIBLE SPACES

SECTION 4.1.2 (5) OF THE AMERICANS WITH DISABILITIES ACT (ADA). SEE 4.1.2.(5) (b) FOR MEDICAL CARE FACILITIES

1. ALL 12"x18" ACCESSIBLE SIGNS (R7-8 & R7-1) SHALL BE MOUNTED AT 7 FEET FROM GRADE TO BOTTOM EDGE OF SIGN FACE (MUTCD). MOUNTING HEIGHT CAN BE REDUCED TO 5 FEET IF PLACED IN AN AREA BETWEEN SIDEWALK AND BUILDING FACE IN WHICH PEDESTRIANS ARE NOT EXPECTED TO USE.

2. REFER TO MANUAL ON UNIFORM TRAFFIC CONTROL DEVICES, (MUTCD) U.S. DEPARTMENT OF TRANSPORTATION AND NORTH CAROLINA DEPARTMENT OF TRANSPORTATION SUPPLEMENT.

3. IF ACCESSIBLE ROUTE IS A RAISED SIDEWALK AREA, THEN RAMPS ARE REQUIRED AT LOADING ZONE AREA.

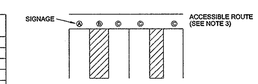

ONE OUT OF EVERY EIGHT (8)ACCESSIBLE SPACES, BUT NOT LESS THAN ONE, IS REQUIRED TO BE VAN ACCESSIBLE.

PARKING SPACE PAVEMENT MARKINGS

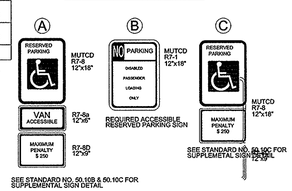

REQUIRED ACCESSIBLE RESERVED PARKING SIGN

SEE STANDARD NO. 50.10B & 50.10C FOR SUPPLEMENTAL SIGN DETAIL

SEE STANDARD NO. 50.10C FOR SUPPLEMETAL SIGN DETAIL

NOTE: PAINT SYMBOL BELOW ONTO PAVED SURFACE WITH 2 COATS OF WHITE PAINT

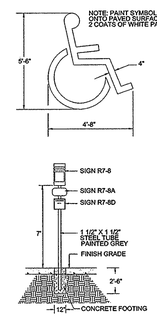

4 C3.3 **HANDICAP PARKING STANDARDS**

NOT TO SCALE

10 C3.3 **STANDARD TURNDOWN DETAIL**

NOT TO SCALE (AT SERVICE AREAS)

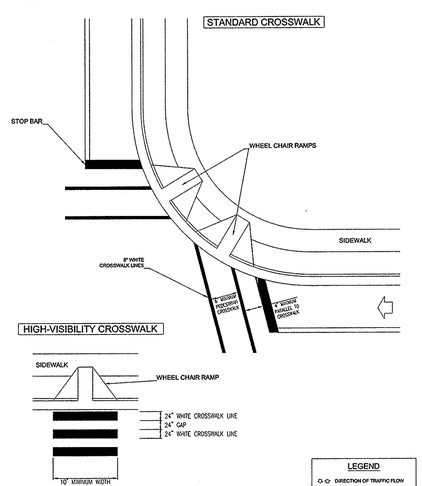

5 C3.3 **ACCESSIBLE RAMP**

NOT TO SCALE SD 16-10

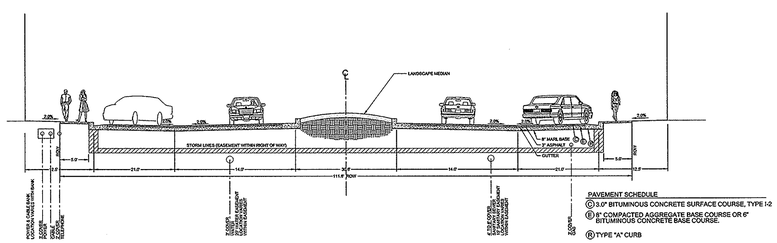

6 C3.3 **COLLECTOR STREET WITH MEDIAN AND DIAGONAL PARKING**

NOT TO SCALE

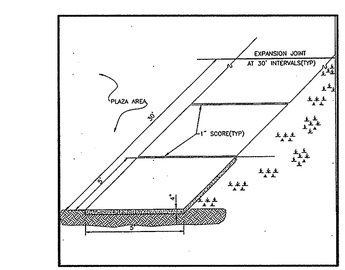

11 C3.3 **SIDEWALK DETAIL**

NOT TO SCALE

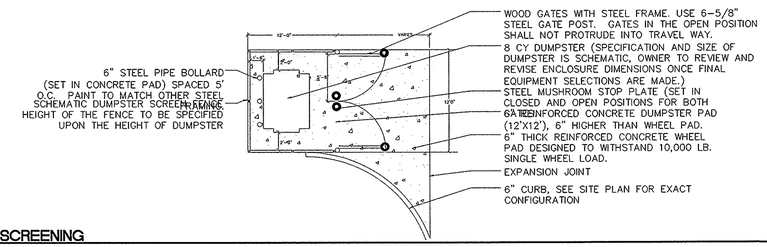

12 C3.2 **DUMPSTER WITH SCREENING**

NOT TO SCALE

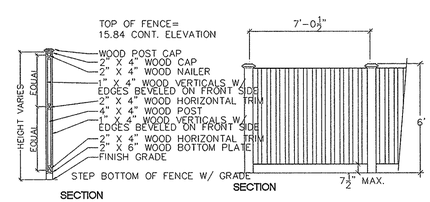

LandDesign
223 N Graham Street Charlotte, NC 28202
Voice 704.333.0325 Fax 704.332.3246
www.LandDesign.com
License #C-0658

LANDDESIGN, INC. CORPORATE SEAL NORTH CAROLINA

NORTH CAROLINA PROFESSIONAL SEAL 37425 ENGINEER RICHARD WAYNE KEIDEL 10-3-13

MAYFAIRE COMMUNITY CENTER PHASE II, LOT 1-R

MAYFAIRE I, LLC; WILMINGTON, NC

Site Details

REVISIONS:
10/3/13 - REVISED PER TRC COMMENTS

DATE: SEPTEMBER 17, 2013
DESIGNED BY: RAK
DRAWN BY: RPG
CHECKED BY: RJK
QC BY: RAK
SCALE: AS NOTED
PROJECT #: 1013138

SHEET #: C3.3

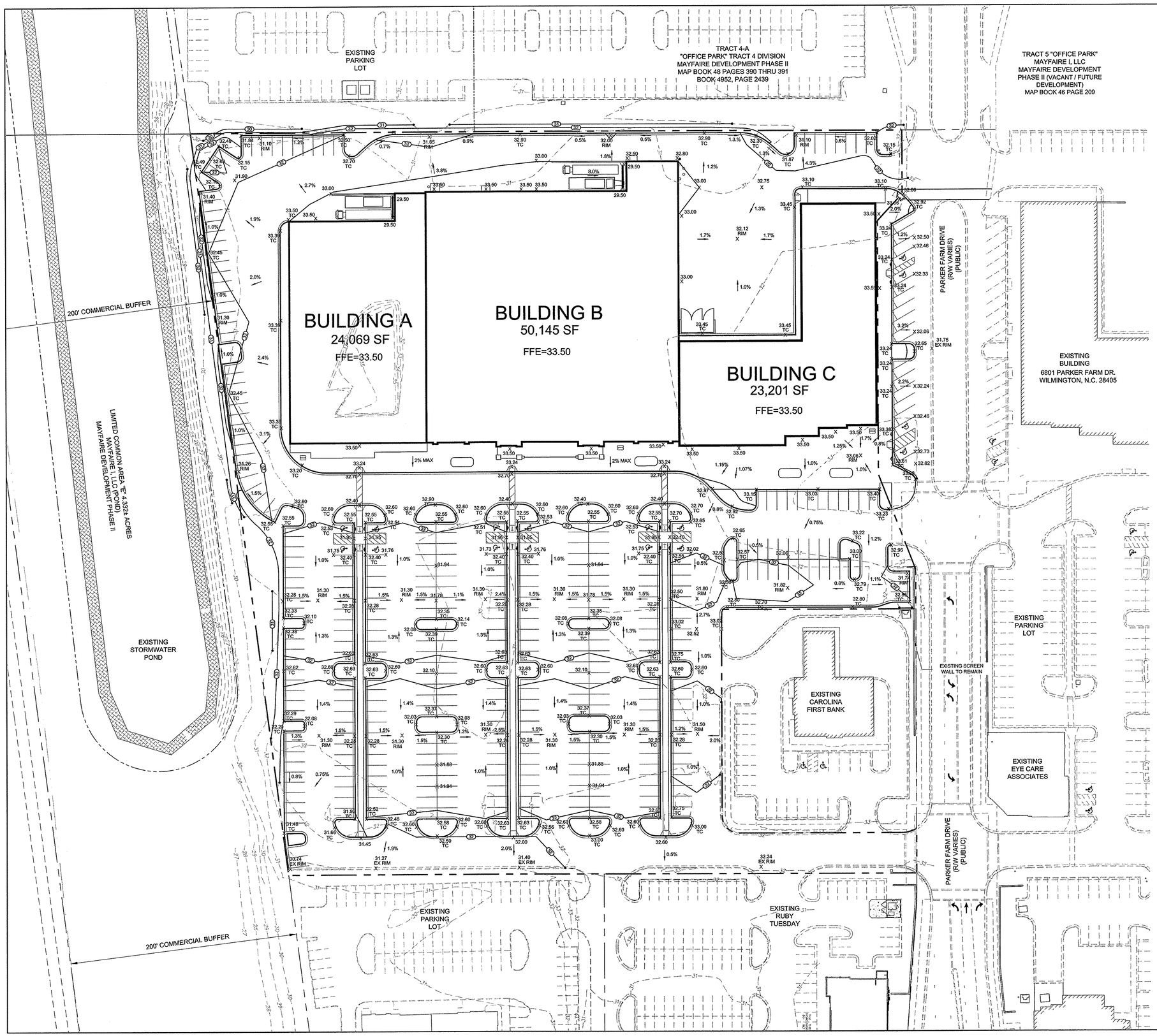

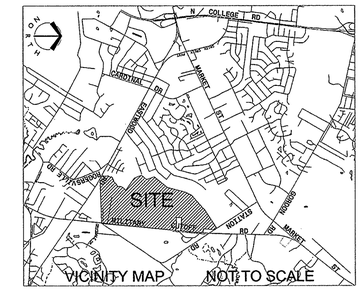

SITE PREPARATION AND GRADING NOTES

1. LAND DEVELOPMENT ENGINEER TO BE GIVEN 24 HOURS NOTICE PRIOR TO START OF CONSTRUCTION.

2. REFER TO CIVIL ENGINEERING DOCUMENTS FOR ALL TREE PROTECTION FENCE LOCATIONS AND INSTALLATION PROCEDURES. BEFORE GRADING/CONSTRUCTION BEGINS, CALL FOR INSPECTION OF TREE PROTECTION BARRICADES. NO SOIL DISTURBANCE OR COMPACTION, CONSTRUCTION MATERIALS, TRAFFIC, BURIAL PITS, TRENCHING, OR OTHER LAND DISTURBING ACTIVITY ALLOWED IN THE TREE PROTECTION ZONE.

3. COORDINATE ALL CURB & STREET GRADES IN INTERSECTION WITH CIVIL ENGINEER AND/OR WITH APPROPRIATE INSPECTOR.

4. IN ORDER TO ENSURE PROPER DRAINAGE, REFER TO CIVIL ENGINEERING DOCUMENTS AND DETAILS FOR CURB SPECIFICATIONS.

5. ALL ROOF DRAIN PIPES TO HAVE A MINIMUM OF 1.0% SLOPE.

6. WETLANDS TO BE CLEARLY MARKED ACCORDING TO APPROVED PLANS AND SPECIFICATIONS PRIOR TO CONSTRUCTION TO PREVENT ACCIDENTAL DAMAGE TO WETLANDS. CONTRACTOR TO BE HELD RESPONSIBLE FOR UNAUTHORIZED WETLAND DAMAGE NOT PERMITTED BY PLANS AND SPECIFICATIONS.

7. APPROVAL OF THIS PLAN IS NOT AUTHORIZATION TO GRADE ADJACENT PROPERTIES. WHEN FIELD CONDITIONS WARRANT OFFSITE GRADING, WRITTEN PERMISSION MUST BE OBTAINED FROM THE AFFECTED PROPERT OWNERS.

8. REFER TO CIVIL ENGINEERING DOCUMENTS FOR ALL STORM DRAINAGE AND DETENTION.

9. ALL SIDEWALKS MAINTAIN A 5% MAXIMUM LONGITUDINAL SLOPE AND A 2% MAXIMUM CROSS SLOPE. LANDINGS PROVIDED FOR ALL SLOPES RUNNING LONGER THAN 30 FEET.

10. BOUNDARY AND TOPOGRAPHIC INFORMATION WERE TAKEN FROM A SURVEY DATED JUNE 2008 BY MICHEAL UNDERWOOD & ASSOC., PA, WILMINGTON, NORTH CAROLINA (910) 815-0650.

11. NEW FINISHED CONTOURS SHOWN ARE TOP OF PAVING IN AREAS TO RECEIVE PAVEMENT AND TOP OF TOPSOIL IN AREAS TO BE SEEDED.

12. ROUGH GRADE ELEVATIONS SHALL BE AS FOLLOWS:
4" - BELOW FINISHED CONTOURS IN SEEDED AREAS.
8" - BELOW FINISHED CONTOURS IN STANDARD DUTY ASPHALT PAVED AREAS.
11" - BELOW FINISHED CONTOURS IN HEAVY DUTY ASPHALT PAVED AREAS.
4" - BELOW THE SIDEWALKK AREAS.
4" - BELOW FLOOR ELEVATIONS WITHIN THE BUILDING AREAS, UNLESS OTHERWISE NOTED.
6" - BELOW FINISHED CONTOURS IN SERVICE COURTS.

13. STORM DRAIN PIPE IS CLASS III REINFORCED CONCRETE CONFORMING TO ASTM C-76, UNLESS OTHERWISE NOTED.

14. DIMENSIONS ON BUILDINGS ARE FOR GRADING PURPOSED ONLY AND ARE NOT TO BE USED TO LAYOUT FOOTINGS.

15. GRADING CONTRACTORS SHALL NOTIFY AND COOPERATE WITH ALL UTILITY COMPANIES OR FIRMS HAVING FACILITIES ON OR ADJACENT TO THE SITE BEFORE DISTURBING, ALTERING, REMOVING, RELOCATING, ADJUSTING OR CONNECTING TO SAID FACILITIES. CONTRACTORS SHALL PAY ALL COSTS IN CONNECTION WITH THE ALTERATION OF OR RELOCATION OF THE FACILITIES. CONTRACTORS SHALL RAISE OR LOWER TOPS OF EXISTING MANHOLES AS REQUIRED TO MATCH FINISHED GRADES.

16. GRADING CONTRACTOR SHALL COOPERATE AND WORK WITH ALL OTHER CONTRACTORS PERFORMING WORK ON THIS PROJECT TO INSURE PROPER AND TIMELY COMPLETION OF THIS PROJECT.

17. THE GRADING CONTRACTOR SHALL USE WHATEVER MEASURES ARE REQUIRED TO PREVENT SILT AND CONSTRUCTION DEBRIS FROM FLOWING ONTO ADJACENT PROPERTIES. CONTRACTOR SHALL COMPLY WITH ALL LOCAL, STATE, AND FEDERAL EROSION SEDIMENT AND SILTATION ORDINANCES. CONTRACTOR SHALL REMOVE ALL TEMPORARY EROSION CONTROL STRUCTURES UPON COMPLETION OF PERMANENT DRAINAGE FACILITIES AND NOT BEFORE ALL AREAS DRAINING INTO THESE STRUCTURES ARE SUFFICIENTLY STABILIZED.

18. FOR ANY WORK ON THE STATE OR CITY RIGHT-OF-WAY, THE GRADING CONTRACTOR SHALL:

A) NOT STORE MATERIAL, EXCESS DIRT OR EQUIPMENT IN THE RIGHT-OF-WAY IN CASE OF MULTILANE HIGHWAYS. THE PAVEMENT SHALL BE KEPT FREE FROM ANY MUD OR EXCAVATION WASTE FROM TRUCKS OR OTHER EQUIPMENT. ON COMPLETION OF THE WORK ALL EXCESS MATERIAL SHALL BE REMOVED FROM THE RIGHT-OF-WAY.

B) PROVIDE ALL NECESSARY AND ADEQUATE SAFETY PRECAUTIONS SUCH AS SIGNS, FLAGS, LIGHT BARRICADES AND FLAGMEN AS REQUIRED BY THE LOCAL AUTHORITIES AND IN ACCORDANCE WITH THE MANUAL ON UNIFORM TRAFFIC CONTROL DEVICES. THE GRADING CONTRACTOR SHALL BE SOLELY RESPONSIBLE FOR AND HOLD HARMLESS THE CITY OF WILMINGTON, THE STATE OF NORTH CAROLINA, THE ARCHITECT/ENGINEER, AND THE OWNER FROM ANY CLAIMS FOR DAMAGE DONE TO EXISTING PRIVATE PROPERTY, PUBLIC UTILITIES, OR TO THE TRAVELING PUBLIC.

C) COMPLETE WORK TO THE SATISFACTION OF THE CITY OF WILMINGTON PUBLIC WORKS DEPARMTMENT AND OBTAIN A LETTER FROM THE DEPARTMENT STATING THAT THE WORK IS ACCEPTABLE.

19. QUALIFIED SOILS LABORATORY SHALL BE ON-SITE DURING EXCAVATING TO DETERMINE THE SUITABILITY OF THE EXISTING SUB-GRADE AND EXISTING ON-SITE MATERIAL PRIOR TO BEGINNING ANY FILLING OPERATIONS.

20. GRADING CONTRACTOR SHALL TAKE ALL AVAILABLE PRECAUTIONS TO CONTROL DUST. CONTRACTOR SHALL CONTROL DUST BY SPRINKLING, OR BY OTHER METHODS AS DIRECTED BY ENGINEER AND/OR OWNER'S REPRESENTATIVE AT NO ADDITIONAL COST TO OWNER.

21. REFER TO SPECIFICATIONS FOR TYPE OF PAVING AND BASE TO BE USED.

22. GRADING CONTRACTOR TO COMPLY WITH ALL STATE AND LOCAL SEDIMENT CONTROL AND AIR POLLUTION ORDINANCES OR RULES.

23. ALL FUTURE BUILDING AREAS SHALL BE GRADED AS PER BUILDING PAD GRADING REQUIREMENTS.

24. IMPORT SUFFICIENT MATERIAL TO COMPLETE WORK AT NO ADDITIONAL COST, IN THE EVENT OF A SHORTAGE OF STRUCTURAL FILL.

25. ALL EXCAVATING IS UNCLASSIFIED AND SHALL INCLUDE ALL MATERIALS ENCOUNTERED.

26. BEFORE ANY MACHINE WORK IS DONE, CONTRACTOR SHALL STAKE OUT AND MARK THE ITEMS ESTABLISHED BY THE SITE PLAN. CONTROL POINTS SHALL BE PRESERVED AT ALL TIMES DURING THE COURSE OF THE PROJECT. LACK OF PROPER WORKING POINTS AND GRADE STAKES MAY REQUIRE CESSATION OF OPERATIONS UNTIL SUCH POINTS AND GRADES HAVE BEEN PLACED TO THE OWNER'S SATISFACTION. ARCHITECT MUST APPROVE STAKED ITEMS PRIOR TO CONSTRUCTION.

27. TEMPORARY EROSION CONTROL DEVICES TO BE INSTALLED PRIOR TO BEGINNING OF GRADING. CONTRACTOR SHALL MAINTAIN ALL TEMPORARY EROSION CONTROL DEVICES AND SHALL REMOVE SILT FROM BERM DITCHES, SILT DAMS, AND SILT FENCES AS REQUIRED. INSPECT DEVICES ON A MINIMUM WEEKLY BASIS WITH EMJ SUPERINTENDENT AND PER NPDES REQUIREMENTS.

28. CONTRACTOR TO COORDINATE ALL WORK WITH OTHER UTILITY INSTALLATIONS NOT COVERED IN THESE PLANS (ELECTRIC, TELEPHONE, GAS, CABLE, ETC.) AND ALLOW FOR THEIR OPERATIONS AND CONSTRUCTION TO BE PERFORMED.

29. CUT AND FILL SLOPES ARE NOT TO EXCEED 3:1 UNLESS OTHERWISE NOTED.

30. CONTRACTOR SHALL REPAIR OR REPLACE IN-KIND ANY DAMAGE THAT OCCURS AS RESULT OF HIS WORK.

BEFORE YOU DIG!
CALL 1-800-632-4949
N.C. ONE-CALL CENTER
IT'S THE LAW!

LandDesign.
223 N Graham Street Charlotte, NC 28202
Voice 704.333.0325 Fax 704.332.3246
www.LandDesign.com
License #C-0658

LANDDESIGN, INC. CORPORATE SEAL NORTH CAROLINA

NORTH CAROLINA PROFESSIONAL SEAL 37425 ENGINEER RICHARD W. KEELDEL
10-3-13

MAYFAIRE COMMUNITY CENTER PHASE II, LOT 1-R

MAYFAIRE I, LLC; WILMINGTON, NC

Grading Plan

REVISIONS:
10/3/13 - REVISED PER TRC COMMENTS

DATE: SEPTEMBER 17, 2013
DESIGNED BY: RAK
DRAWN BY: RAK
CHECKED BY: RK
SCALE: 1"=40'
PROJECT #: 1013138

SHEET #: C4.0

N:_2013\1013138\CAD\Construction Documents\8040grading.dwg, Grading Plan, 10/3/2013 2:44:07 PM, rkeldel, LandDesign, Inc.

TWO MILE BRANCH, EASTWOOD RD, 10YR

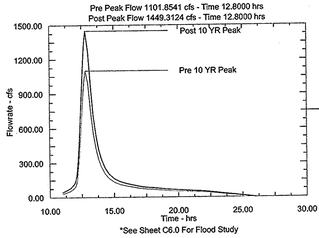

*See Sheet C6.0 For Flood Study

DESIGNER'S CERTIFICATION

I HEREBY CERTIFY THAT THIS PLAN HAS BEEN PREPARED IN ACCORDANCE WITH THE LATEST WILMINGTON STANDARDS AND SPECIFICATIONS FOR STORMWATER MANAGEMENT AND CHAPTER 20 OF THE CODE OF ORDINANCES OF THE CITY OF WILMINGTON.

SIGNATURE:

PRINTED NAME AND TITLE: ROBERT KEIDEL, PE

DATE: 08/13/13 REGISTRATION NUMBER: 37425

OWNER'S/DEVELOPER'S CERTIFICATION

WE HEREBY CERTIFY THAT ANY CLEARING, GRADING, CONSTRUCTION OR DEVELOPMENT, OR ALL OF THESE, WILL BE DONE PURSUANT TO THIS PLAN AND THAT THE APPLICABLE STORMWATER MANAGEMENT CONDITIONS AND REQUIREMENTS OF THE CITY OF WILMINGTON THE STATE OF NORTH CAROLINA AND THE FEDERAL GOVERNMENT AND ITS AGENCIES ARE HEREBY MADE PART OF THIS PLAN.

SIGNATURE:

PRINTED NAME AND TITLE: JEFF ZIMMER

DATE: 08/13/13

GENERAL INFORMATION:

1.) 394.53 ACRES TOTAL PARCEL
2.) DEVELOPER: BRODY ZIMMER L.L.C.
111 PRINCESS STREET
P.O. BOX 2628
WILMINGTON, N.C. 28402
3.) SEWAGE DISPOSAL SHALL BE BY PUBLIC SEWER AND PRIVATE SANITARY SEWER.
4.) TYPE OF ROADWAYS: CURB AND GUTTER
5.) ROAD SLOPE @ 0.5% - 2.08%
6.) A PORTION OF THIS WITHIN "FEMA" FLOOD LINE.
7.) THIS MAP IS FOR MASTER PLAN WATERSHED USE ONLY. ALL INDIVIDUAL SITE DEVELOPMENT SHALL SUBMIT PERMIT APPLICATIONS WITH DETAILED DESIGN OF EROSION CONTROL AND WATERSHED DEVICES IN ACCORDANCE WITH THIS PLAN.
8.) SOIL TYPES INCLUDE:(Ba) BAYBORO, (Kr) KUREB, (Le) LEON, (Mu) MURVILLE, (On) ONSLOW, (Pm) PAMLICO, (Se) SEAGATE, (To) TORHUNTA, (Wr) WRIGHTSBORO, AND (Wo) WOODINGTON, WILMINGTON, NEW HANOVER COUNTY.
9.) THE GOVERNMENT OFFICE HAVING JURISDICTION FOR WATERSHED PROTECTION AND THEIR ASSIGNS WILL HAVE RIGHT OF ACCESS TO ALL PERMANENT WET DETENTION AND/OR RETENTENTION PONDS FOR INSPECTIONS AND MAINTENANCE ENFORCEMENT.
10.) THE PROPERTY OWNER WILL BE RESPONSIBLE FOR MAINTAINING THE COMPLETED PERMANENT DETENTION AND/OR RETENTION PONDS AS DIRECTED BY THE GOVERNMENT OFFICE HAVING JURISDICTION FOR WATERSHED PROTECTION.
11.) THE PERMANENT DETENTION AND/OR RETENTION PONDS SHALL HAVE FULL DESIGN VOLUME AVAILABLE PRIOR TO ANY ISSUANCE OF CERTIFICATES OF OCCUPANCY FOR SITE AND/OR PRIOR TO ANY PLAT RECORDATION FOR THE SITE. THIS MAY REQUIRE THE CLEANOUT AND DISPOSAL OF SEDIMENT FORM THE POND.
12.) THE CONTRACTOR SHALL SCHEDULE A PRE CONSTRUCTION MEETING WITH THE CITY OF WILMINGTON WATERSHED ENGINEER, WHEN A PERMANENT DETENTION AND/OR RETENTION POND SITE HAS BEEN CLEARED AND THE POND HAS BEEN FIELD STAKED.
13.) PHASE 1 DISTURBED AREA = APPROXIMATELY 66 ACRES.

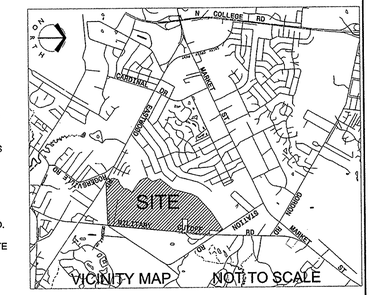

WATERSHED LEGEND
LAND CLASSIFICATION BOUNDARY
PROPERTY LINE
TOWN CENTER BASIN LINE
PROPOSED ON-SITE ROAD

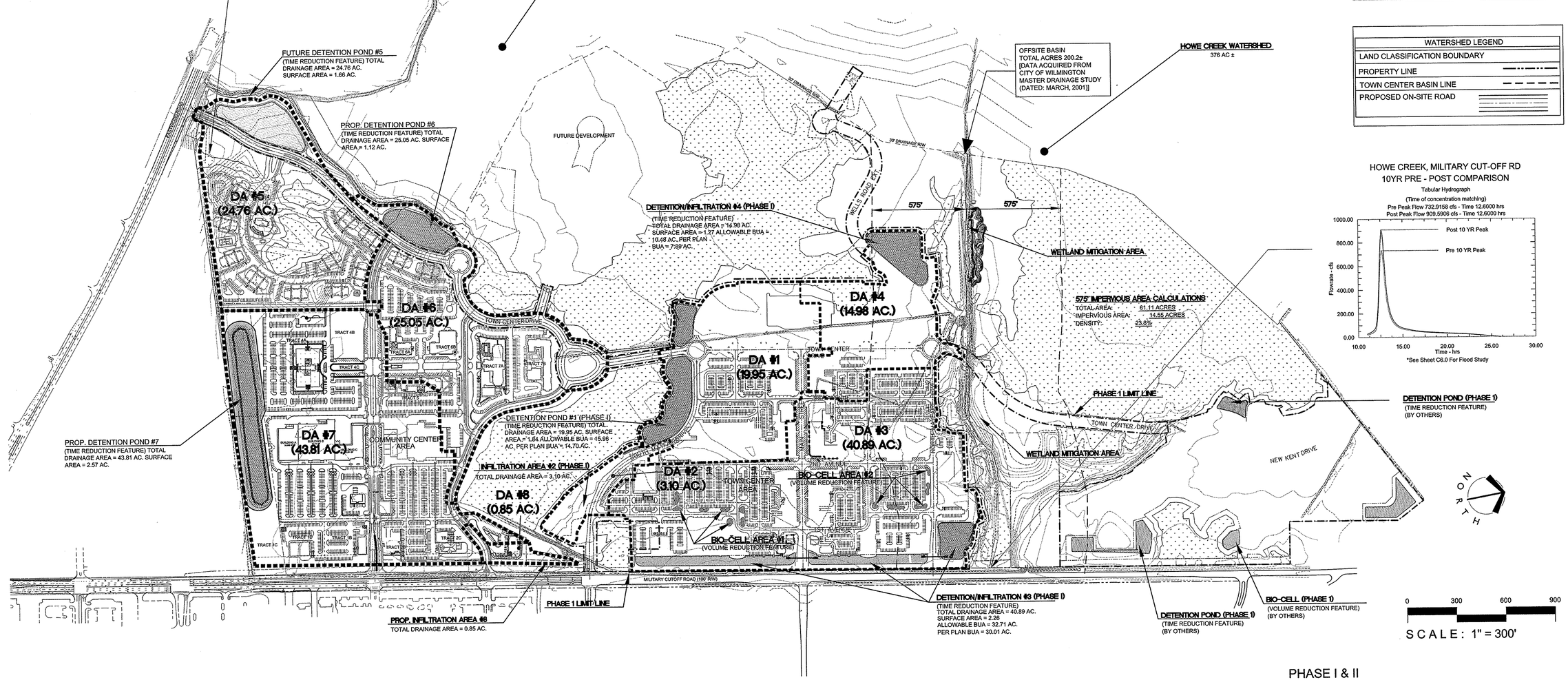

HOWE CREEK, MILITARY CUT-OFF RD
10YR PRE - POST COMPARISON

*See Sheet C6.0 For Flood Study

PHASE I & II

TOWN CENTER AND COMMUNITY CENTER WATERSHED CONTROL DATA (ONLY)

DA	DRAINAGE AREA (ACRE)	% IMPERVIOUS (PER PLAN)	% IMPERVIOUS (WQ DESIGN BUA)	WATER QUALITY TREATMENT REQUIREMENTS	STREAM WATERSHED
1	19.95	14.70 AC. (73%)	15.96 AC. (80%)	1.0"	BRADLEY CREEK
2	3.10	1.34 AC. (43%)	2.48 AC. (80%)	1.5"	HOWE CREEK
3	40.89	30.01 AC. (73%)	32.71 AC. (80%)	1.5"	HOWE CREEK
4	14.98	7.89 AC. (52%)	10.48 AC. (70%)	1.5"	HOWE CREEK
5	24.76	8.89 AC. (35%)	17.33 AC. (70%)	1.0"	BRADLEY CREEK
6	25.05	14.03 AC. (56%)	17.54 AC. (70%)	1.0"	BRADLEY CREEK
7	43.81	30.71 AC. (70%)	35.05 AC. (80%)	1.0"	BRADLEY CREEK
8	0.85	0.54 AC. (63%)	0.68 AC. (80%)	1.5"	HOWE CREEK

PHASE 2 OVERALL WATERSHED DATA

RESOURCE PROTECTION AREA		
LAND AREA	5,918,444 SF	135.87 AC
IMPERVIOUS SURFACE:		
RETAIL AREA TOTAL SF	1,436,893 SF	
MULTIFAMILY AREA TOTAL SF	267,065 SF	
OFFICE AREA TOTAL SF	1,206,895 SF	
TOTAL	2,910,853 SF =	49.18% IMPERVIOUS

PHASE I OVERALL WATERSHED DATA

RESOURCE PROTECTION AREA		
LAND AREA	10,389,495.60 SF	238.51 AC
IMPERVIOUS SURFACE:		
RETAIL AREA BLDG. SF	634,530 SF	
RETAIL AREA PAVEMENT SF	1,548,000 SF	
RETAIL AREA HARDSCAPES SF	214,394 SF	
MULTIFAMILY AREA TOTAL SF	535,032 SF	
SINGLE FAMILY AREA TOTAL SF	10,000 SF	
COLLECTOR STREETS SF	109,200 SF	
TOTAL	3,031,156 SF =	29.17% IMPERVIOUS

URBAN TRANSITION		
LAND AREA	2,736,439 SF	62.96 AC
IMPERVIOUS SURFACE:		
HOTEL AREA SF	165,978 SF	
SINGLE FAMILY AREA TOTAL SF	218,800 SF	
SINGLE FAMILY ROADS TOTAL SF	182,220 SF	
COLLECTOR STREETS SF	167,760 SF	
TOTAL	734,758 SF =	26.84% IMPERVIOUS

LandDesign.
223 N. Graham Street, Charlotte, NC 28202
V: 704.333.0325 F: 704.333.1246
www.LandDesign.com
License #C-0658

LANDDESIGN, INC. CORPORATE SEAL NORTH CAROLINA

NORTH CAROLINA PROFESSIONAL SEAL 37425 ENGINEER ROBERT A. KEIDEL 10-3-13

MAYFAIRE COMMUNITY CENTER PHASE II, LOT 1-R

MAYFAIRE I, LLC; WILMINGTON, NC

Overall Watershed Plan

REVISIONS:
10/3/13 - REVISED PER TRC COMMENTS

DATE: SEPTEMBER 17, 2013
DESIGNED BY: RAK
DRAWN BY: RPK
CHECKED BY: RPK
Q.C. BY: RAK
SCALE: 1" = 300'
PROJECT #: 1013138

SHEET #: C4.1

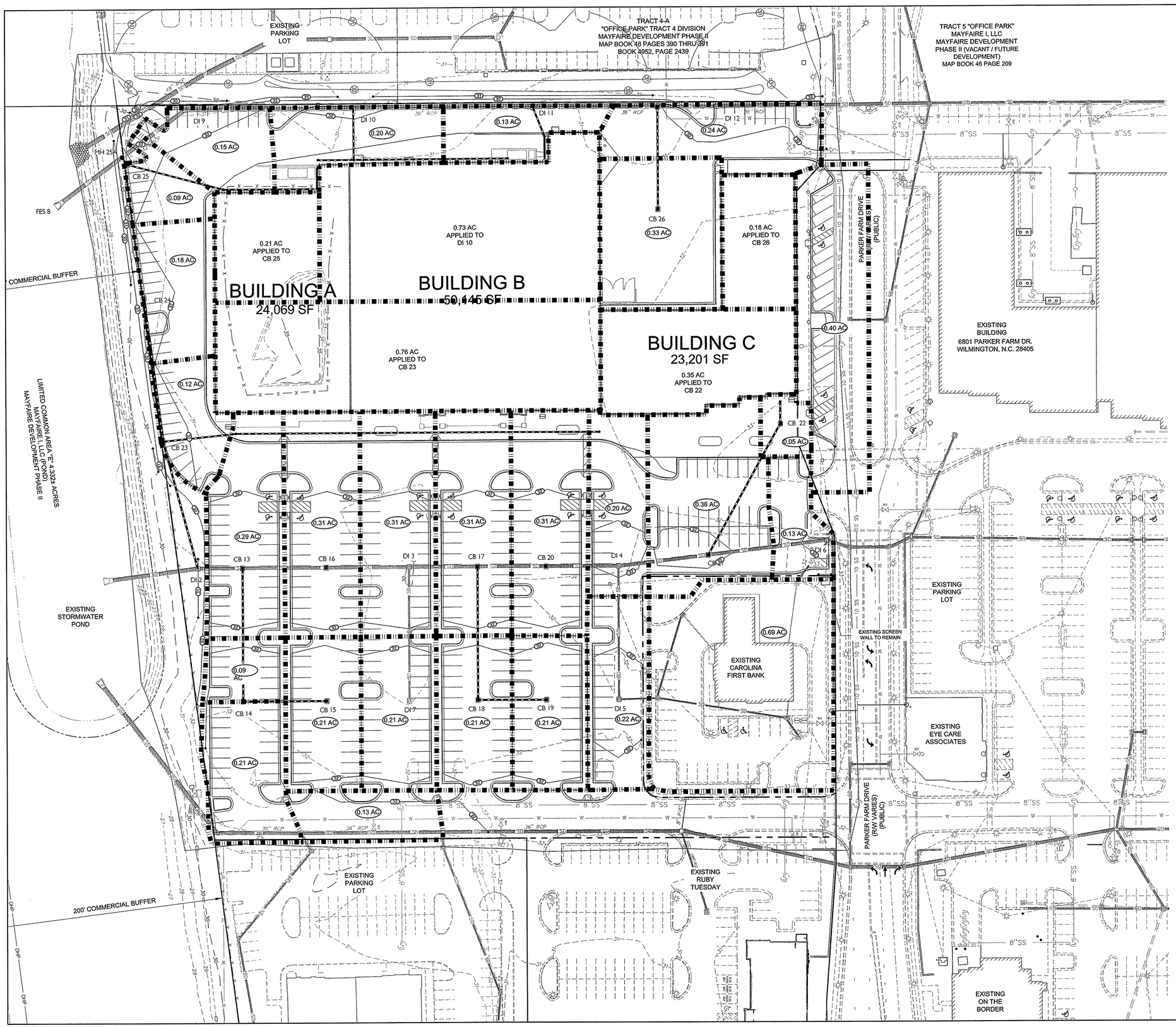

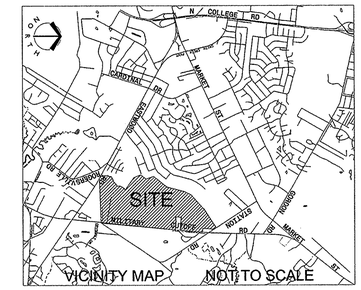

NORTH

20 0' 20 40 80

BEFORE YOU DIG! CALL 1-800-632-4949 N.C. ONE-CALL CENTER IT'S THE LAW!

LandDesign
223 N Graham Street Charlotte, NC 28202
V: 704.333.0325 F: 704.332.3246
www.LandDesign.com
License #C-0658

LANDDESIGN, INC. CORPORATE SEAL NORTH CAROLINA

NORTH CAROLINA PROFESSIONAL SEAL 37425 ENGINEER ROBERT

10-3-13

MAYFAIRE
COMMUNITY CENTER PHASE II, LOT I-R
MAYFAIRE I, LLC; WILMINGTON, NC

Drainage Area Plan

REVISIONS:
10/3/13 - REVISED PER TRC COMMENTS

DATE: SEPTEMBER 17, 2013
DESIGNED BY: RAK
DRAWN BY: RPG
CHECKED BY: RJK
Q.C. BY: RAK
SCALE: 1" = 40'
PROJECT #: 1013138

SHEET #: C4.2

N:_2013\1013138\CAD\Construction Documents\8040storm.dwg, Drainage Area Plan, 10/3/2013 2:43:17 PM, rkeidel, LandDesign, Inc.

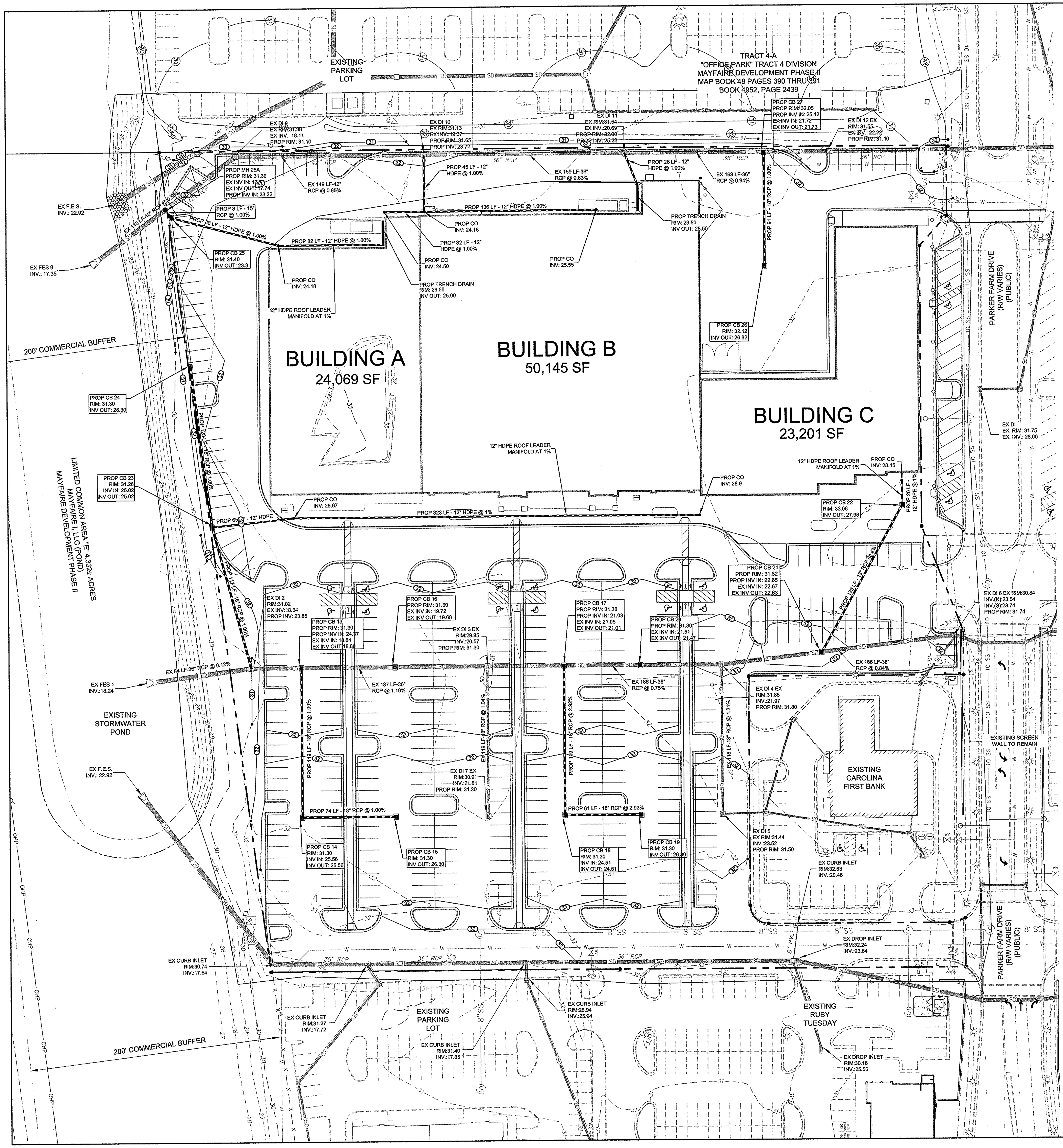

SITE PREPARATION AND GRADING NOTES

1. REFER TO CIVIL ENGINEERING DOCUMENTS FOR GRADING PLANS, EROSION CONTROL AND DRAINAGE PLANS.

2. LAND DEVELOPMENT ENGINEER TO BE GIVEN 24 HOURS NOTICE PRIOR TO START OF CONSTRUCTION.

3. REFER TO CIVIL ENGINEERING DOCUMENTS FOR ALL TREE PROTECTION FENCE LOCATIONS AND INSTALLATION PROCEDURES. BEFORE GRADING/CONSTRUCTION BEGINS, CALL FOR INSPECTION OF TREE PROTECTION BARRICADES. NO SOIL DISTURBANCE OR COMPACTION, CONSTRUCTION MATERIALS, TRAFFIC, BURIAL PITS, TRENCHING, OR OTHER LAND DISTURBING ACTIVITY ALLOWED IN THE TREE PROTECTION ZONE.

4. COORDINATE ALL CURB & STREET GRADES IN INTERSECTION WITH CIVIL ENGINEER AND/OR WITH APPROPRIATE INSPECTOR.

5. IN ORDER TO ENSURE PROPER DRAINAGE, REFER TO CIVIL ENGINEERING DOCUMENTS AND DETAILS FOR CURB SPECIFICATIONS.

6. ALL ROOF DRAIN PIPES TO HAVE A MINIMUM OF 1.0% SLOPE.

7. WETLANDS TO BE CLEARLY MARKED ACCORDING TO APPROVED PLANS AND SPECIFICATIONS PRIOR TO CONSTRUCTION TO PREVENT ACCIDENTAL DAMAGE TO WETLANDS. CONTRACTOR TO BE HELD RESPONSIBLE FOR UNAUTHORIZED WETLAND DAMAGE NOT PERMITTED BY PLANS AND SPECIFICATIONS.

8. APPROVAL OF THIS PLAN IS NOT AUTHORIZATION TO GRADE ADJACENT PROPERTIES. WHEN FIELD CONDITIONS WARRANT OFFSITE GRADING, WRITTEN PERMISSION MUST BE OBTAINED FROM THE AFFECTED PROPERT OWNERS.

9. ALL SIDEWALKS MAINTAIN A 5% MAXIMUM LONGITUDINAL SLOPE AND A 2% MAXIMUM CROSS SLOPE. LANDINGS PROVIDED FOR ALL SLOPES RUNNING LONGER THAN 30 FEET.

10. BOUNDARY AND TOPOGRAPHIC INFORMATION WERE TAKEN FROM A SURVEY DATED JUNE 2008 BY MICHEAL UNDERWOOD & ASSOC., PA, WILMINGTON, NORTH CAROLINA (910) 815-0650.

11. NEW FINISHED CONTOURS SHOWN ARE TOP OF PAVING IN AREAS TO RECEIVE PAVEMENT AND TOP OF TOPSOIL IN AREAS TO BE SEEDED.

12. ROUGH GRADE ELEVATIONS SHALL BE AS FOLLOWS:
4" - BELOW FINISHED CONTOURS IN SEEDED AREAS.
8" - BELOW FINISHED CONTOURS IN STANDARD DUTY ASPHALT PAVED AREAS.
11" - BELOW FINISHED CONTOURS IN HEAVY DUTY ASPHALT PAVED AREAS.
4" - BELOW THE SIDEWALKK AREAS.
4" - BELOW FLOOR ELEVATIONS WITHIN THE BUILDING AREAS, UNLESS OTHERWISE NOTED.
6" - BELOW FINISHED CONTOURS IN SERVICE COURTS.

13. STORM DRAIN PIPE IS CLASS III REINFORCED CONCRETE CONFORMING TO ASTM C-76, UNLESS OTHERWISE NOTED.

14. DIMENSIONS ON BUILDINGS ARE FOR GRADING PURPOSED ONLY AND ARE NOT TO BE USED TO LAYOUT FOOTINGS.

15. GRADING CONTRACTORS SHALL NOTIFY AND COOPERATE WITH ALL UTILITY COMPANIES OR FIRMS HAVING FACILITIES ON OR ADJACENT TO THE SITE BEFORE DISTURBING, ALTERING, REMOVING, RELOCATING, ADJUSTING OR CONNECTING TO SAID FACILITIES. CONTRACTORS SHALL PAY ALL COSTS IN CONNECTION WITH THE ALTERATION OF OR RELOCATION OF THE FACILITIES. CONTRACTORS SHALL RAISE OR LOWER TOPS OF EXISTING MANHOLES AS REQUIRED TO MATCH FINISHED GRADES.

16. GRADING CONTRACTOR SHALL COOPERATE AND WORK WITH ALL OTHER CONTRACTORS PERFORMING WORK ON THIS PROJECT TO INSURE PROPER AND TIMELY COMPLETION OF THIS PROJECT.

17. THE GRADING CONTRACTOR SHALL USE WHATEVER MEASURES ARE REQUIRED TO PREVENT SILT AND CONSTRUCTION DEBRIS FROM FLOWING ONTO ADJACENT PROPERTIES. CONTRACTOR SHALL COMPLY WITH ALL LOCAL, STATE, AND FEDERAL EROSION SEDIMENT AND SILTATION ORDINANCES. CONTRACTOR SHALL REMOVE ALL TEMPORARY EROSION CONTROL STRUCTURES UPON COMPLETION OF PERMANENT DRAINAGE FACILITIES AND NOT BEFORE ALL AREAS DRAINING INTO THESE STRUCTURES ARE SUFFICIENTLY STABILIZED.

18. FOR ANY WORK ON THE STATE OR CITY RIGHT-OF-WAY, THE GRADING CONTRACTOR SHALL:

A) NOT STORE MATERIAL, EXCESS DIRT OR EQUIPMENT IN THE RIGHT-OF-WAY IN CASE OF MULTILANE HIGHWAYS. THE PAVEMENT SHALL BE KEPT FREE FROM ANY MUD OR EXCAVATION WASTE FROM TRUCKS OR OTHER EQUIPMENT. ON COMPLETION OF THE WORK ALL EXCESS MATERIAL SHALL BE REMOVED FROM THE RIGHT-OF-WAY.

B) PROVIDE ALL NECESSARY AND ADEQUATE SAFETY PRECAUTIONS SUCH AS SIGNS, FLAGS, LIGHT BARRICADES AND FLAGMEN AS REQUIRED BY THE LOCAL AUTHORITIES AND IN ACCORDANCE WITH THE MANUAL ON UNIFORM TRAFFIC CONTROL DEVICES. THE GRADING CONTRACTOR SHALL BE SOLELY RESPONSIBLE FOR AND HOLD HARMLESS THE CITY OF WILMINGTON, THE STATE OF NORTH CAROLINA, THE ARCHITECT/ENGINEER, AND THE OWNER FROM ANY CLAIMS FOR DAMAGE DONE TO EXISTING PRIVATE PROPERTY, PUBLIC UTILITIES, OR TO THE TRAVELING PUBLIC.

C) COMPLETE WORK TO THE SATISFACTION OF THE CITY OF WILMINGTON PUBLIC WORKS DEPARMTMENT AND OBTAIN A LETTER FROM THE DEPARTMENT STATING THAT THE WORK IS ACCEPTABLE.

19. QUALIFIED SOILS LABORATORY SHALL BE ON-SITE DURING EXCAVATING TO DETERMINE THE SUITABILITY OF THE EXISTING SUB-GRADE AND EXISTING ON-SITE MATERIAL PRIOR TO BEGINNING ANY FILLING OPERATIONS.

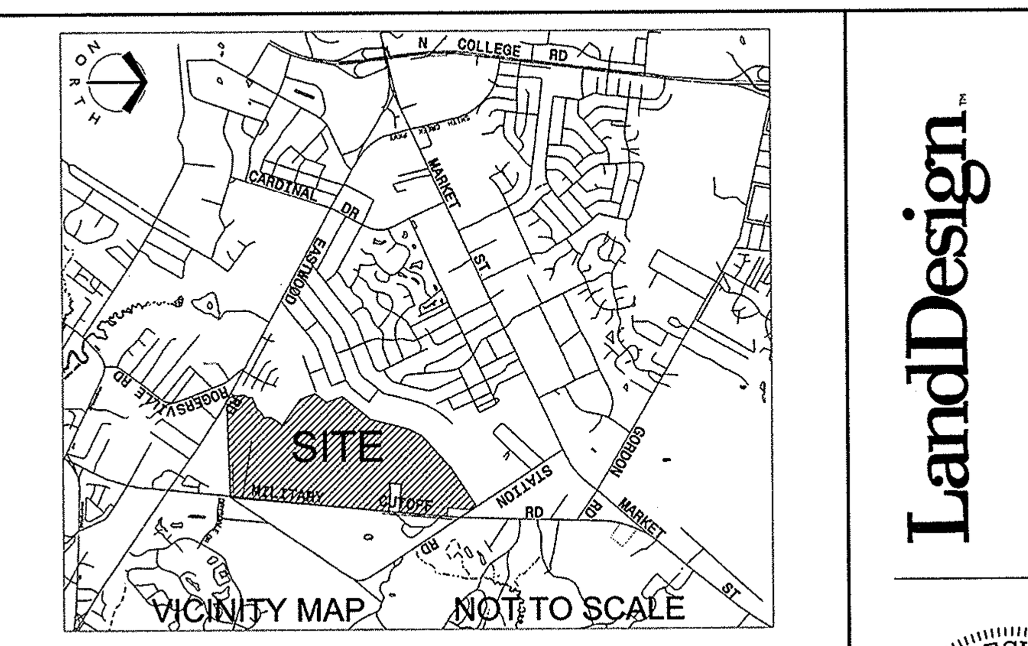

20. GRADING CONTRACTOR SHALL TAKE ALL AVAILABLE PRECAUTIONS TO CONTROL DUST. CONTRACTOR SHALL CONTROL DUST BY SPRINKLING, OR BY OTHER METHODS AS DIRECTED BY ENGINEER AND/OR OWNER'S REPRESENTATIVE AT NO ADDITIONAL COST TO OWNER.

21. REFER TO SPECIFICATIONS FOR TYPE OF PAVING AND BASE TO BE USED.

22. GRADING CONTRACTOR TO COMPLY WITH ALL STATE AND LOCAL SEDIMENT CONTROL AND AIR POLLUTION ORDINANCES OR RULES.

23. IMPORT SUFFICIENT MATERIAL TO COMPLETE WORK AT NO ADDITIONAL COST, IN THE EVENT OF A SHORTAGE OF STRUCTURAL FILL.

24. ALL EXCAVATING IS UNCLASSIFIED AND SHALL INCLUDE ALL MATERIALS ENCOUNTERED.

25. BEFORE ANY MACHINE WORK IS DONE, CONTRACTOR SHALL STAKE OUT AND MARK THE ITEMS ESTABLISHED BY THE SITE PLAN. CONTROL POINTS SHALL BE PRESERVED AT ALL TIMES DURING THE COURSE OF THE PROJECT. LACK OF PROPER WORKING POINTS AND GRADE STAKES MAY REQUIRE CESSATION OF OPERATIONS UNTIL SUCH POINTS AND GRADES HAVE BEEN PLACED TO THE OWNER'S SATISFACTION. ARCHITECT MUST APPROVE STAKED ITEMS PRIOR TO CONSTRUCTION.

26. TEMPORARY EROSION CONTROL DEVICES TO BE INSTALLED PRIOR TO BEGINNING OF GRADING. CONTRACTOR SHALL MAINTAIN ALL TEMPORARY EROSION CONTROL DEVICES AND SHALL REMOVE SILT FROM BERM DITCHES, SILT DAMS, AND SILT FENCES AS REQUIRED. INSPECT DEVICES ON A MINIMUM WEEKLY BASIS WITH EMJ SUPERINTENDENT AND PER NPDES REQUIREMENTS.

27. CONTRACTOR TO COORDINATE ALL WORK WITH OTHER UTILITY INSTALLATIONS NOT COVERED IN THESE PLANS (ELECTRIC, TELEPHONE, GAS, CABLE, ETC.) AND ALLOW FOR THEIR OPERATIONS AND CONSTRUCTION TO BE PERFORMED.

28. CUT AND FILL SLOPES ARE NOT TO EXCEED 3:1 UNLESS OTHERWISE NOTED.

29. CONTRACTOR SHALL REPAIR OR REPLACE IN-KIND ANY DAMAGE THAT OCCURS AS RESULT OF HIS WORK.

30. ALL LINEAR FOOTAGE FOR ALL UTILITY PIPES ARE APPROXIMATE, ACTUAL INSTALLED QUANTITIES MAY VARY.

31. STORM SEWER LEAD-INS TO BUILDINGS SHALL NOT BE INSTALLED UNTIL BUILDING PLANS ARE COMPLETED AND LOCATIONS ESTABLISHED ON THE ARCHITECTURAL PLANS. LEAD-INS MAY CHANGE 15' HORIZONTALLY AND 3' VERTICALLY PRIOR TO INSTALLATION AT NO ADDITIONAL COST TO THE OWNER. CONTRACTOR SHALL REQUEST AND RECEIVE WRITTEN APPROVAL FROM PRIME CONTRACTOR PRIOR TO INSTALLATION OF LEAD-INS. CONTRACTOR SHALL COORDINATE LOCATIONS, SIZE AND INVERT ELEVATIONS OF STORM SEWERS WITH APPROVED BUILDING PLUMBING PLANS.

32. CONTRACTOR SHALL ALLOW FOR ADJUSTMENTS OF CATCH BASIN GRATE AND RIM ELEVATIONS TO MATCH FINAL CONSTRUCTION AS NECESSARY.

Project: Mayfaire Phase 2   Computed By: RPG   Date: 9/16/2013
Location: Wilmington, NC   Checked By: RAK   Sheet: 1 of 1

Storm Frequency 10 yrs.   Pipe Type: RCP

Location		Drainage Area							Pipe Data							
From	To	Sub-Total Acres	Total Acres (To Pipe)	Time Of Concentration (min.)	I Intensity (in/hr)	C Runoff Coefficient	Q Flow (cfs)	Q_{total} Flow (cfs)	Slope (ft/ft)	Q_{full} Flow (cfs)	Diameter (in.)	V_{full} (fps)	Length (ft.)	Upper Invert (ft.)	Lower Invert (ft.)	Rim Elevation (ft.)
EX DI#6	CB#21	0.13	3.18	5	7.23	0.85	0.80	19.54	0.0084	61.09	36	8.66	106	23.54	22.65	31.74
CB#22	CB#21	0.40	0.40	5	7.23	0.85	2.46	2.46	0.0400	21.00	18	11.88	133	27.96	22.65	33.06
CB#21	EX DI#4	0.38	3.96	5	7.23	0.85	2.34	24.34	0.0085	61.47	36	8.71	80	22.65	21.97	31.82
EX DI#5	EX DI#4	0.22	0.91	5	7.23	0.85	1.35	5.59	0.0131	12.03	18	6.81	118	23.52	21.97	31.50
EXDI#4	CB#20	0.20	5.07	5	7.23	0.85	1.23	31.16	0.0075	57.74	36	8.19	64	21.97	21.49	31.80
CB#20	CB#17	0.31	5.38	5	7.23	0.85	1.91	33.06	0.0075	57.90	36	8.21	61	21.49	21.03	31.30
CB#19	CB#18	0.21	0.21	5	7.23	0.85	1.29	1.29	0.0293	17.99	18	10.18	61	26.30	24.51	31.30
CB#18	CB#17	0.21	0.42	5	7.23	0.85	1.29	2.58	0.0292	17.96	18	10.16	119	24.51	21.03	31.30
CB#17	EX DI#3	0.31	6.11	5	7.23	0.85	1.91	37.55	0.0075	57.90	36	8.21	61	21.03	20.57	31.30
EX DI#7	EX DI#3	0.21	0.21	5	7.23	0.85	1.29	1.29	0.0104	10.72	18	6.06	119	21.81	20.57	31.30
EX DI#3	CB#16	0.31	6.63	5	7.23	0.85	1.91	40.74	0.0119	72.79	36	10.32	73	20.57	19.70	31.30
CB#16	CB#13	0.31	6.94	5	7.23	0.85	1.91	42.65	0.0119	72.71	36	10.31	74	19.70	18.82	31.30
CB#15	CB#14	0.21	0.21	5	7.23	0.85	1.29	1.29	0.0100	10.50	18	5.94	74	26.30	25.56	31.30
CB#14	CB#13	0.09	0.30	5	7.23	0.85	0.55	1.84	0.0100	10.50	18	5.94	119	25.56	24.37	31.30
CB#13	EX DI#2	0.29	7.53	5	7.23	0.85	1.78	46.28	0.0120	73.04	36	10.35	40	18.82	18.34	31.30
CB#24	CB#23	0.18	0.18	5	7.23	0.85	1.11	1.11	0.0100	10.50	18	5.94	128	26.30	25.02	31.30
CB#23	EX DI#2	0.88	1.06	5	7.23	0.85	5.41	6.51	0.0100	10.50	18	5.94	117	25.02	23.85	31.26
EX DI#2	EX FES#1	0.01	8.60	5	7.23	0.85	0.06	52.85	0.0012	23.00	36	3.26	84	18.34	18.24	31.02
CB#26	CB#27	0.51	0.51	5	7.23	0.85	3.13	3.13	0.0100	10.50	18	5.94	91	26.32	25.42	32.12
CB#27	EX DI#11	0.32	6.80	5	7.23	0.85	1.97	41.79	0.0093	64.32	36	9.12	111	21.72	20.69	32.05
EX DI#11	EX DI#10	0.13	6.93	5	7.23	0.85	0.80	42.59	0.0083	60.75	36	8.61	159	20.69	19.37	32.00
EX DI#10	EX DI#9	0.93	7.86	5	7.23	0.85	5.72	48.30	0.0085	92.72	42	9.66	149	19.37	18.11	31.65
EX DI#9	MH#25A	0.15	8.01	5	7.23	0.85	0.92	49.23	0.0053	73.22	42	7.63	70	18.11	17.76	31.10
CB#25	MH#25A	0.30	0.30	5	7.23	0.85	1.84	1.84	0.0100	6.46	15	5.26	8	23.30	23.22	31.40
MH#25A	EX FES#8	0.00	8.31	5	7.23	0.85	0.00	51.07	0.0053	73.22	42	7.63	73	17.74	17.35	31.30

NORTH

20 0' 20 40 80

BEFORE YOU DIG!
CALL 1-800-632-4949
N.C. ONE-CALL CENTER
IT'S THE LAW!

LandDesign
223 N Graham Street Charlotte, NC 28202
V: 704.333.0325 F: 704.332.3246
www.LandDesign.com
License #C-0658

LANDDESIGN, INC. CORPORATE SEAL NORTH CAROLINA

NORTH CAROLINA PROFESSIONAL SEAL 37425 ENGINEER ROBERT A. KEIDEL
10-3-13

MAYFAIRE
COMMUNITY CENTER PHASE II, LOT 1-R
MAYFAIRE I, LLC; WILMINGTON, NC

Strom Drainage Plan

REVISIONS:
10/3/13 - REVISED PER TRC COMMENTS

DATE: SEPTEMBER 17, 2013
DESIGNED BY: RAK
DRAWN BY: RPG
CHECKED BY: RJK
Q.C. BY: RAK
SCALE: 1" = 40'
PROJECT #: 1013138

SHEET #:
C4.3

N:_2013\1013138\CAD\Construction Documents\8040storm.dwg, Strom Drainage Plan, 10/3/2013 2:43:06 PM, rkeidel, LandDesign, Inc.

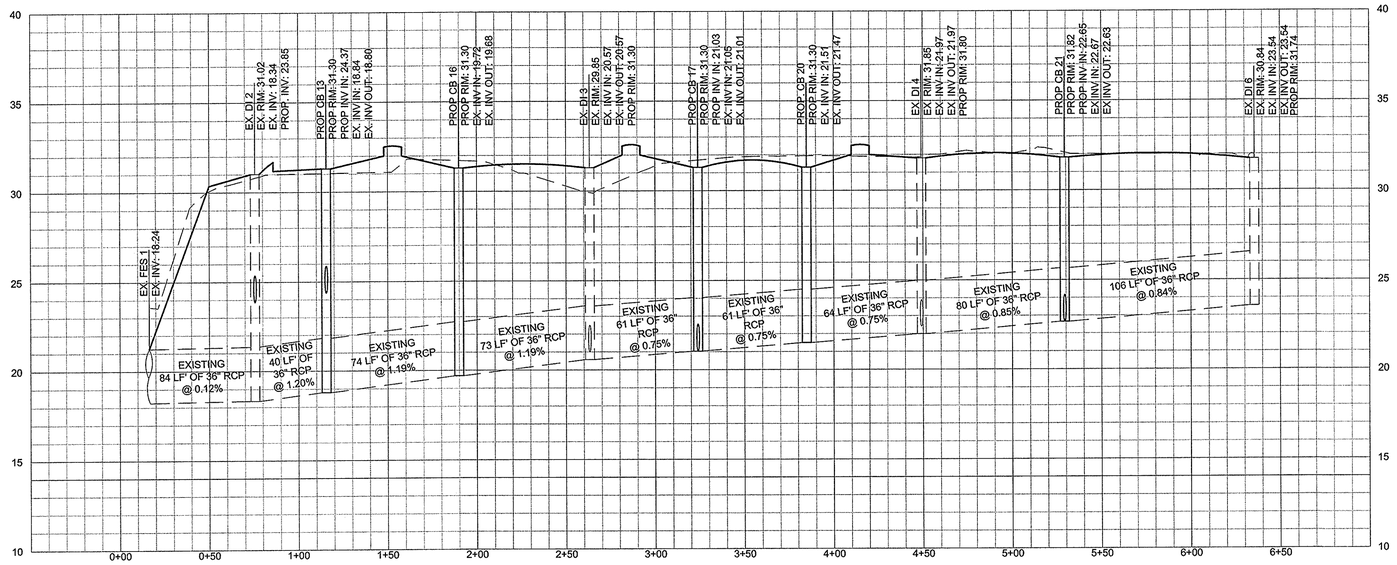

EX. DI 6 TO EX. FES 1

HORIZONTAL SCALE: 40 FEET PER INCH
VERTICAL SCALE: 4 FEET PER INCH

PROPOSED GROUND
EXISTING GROUND

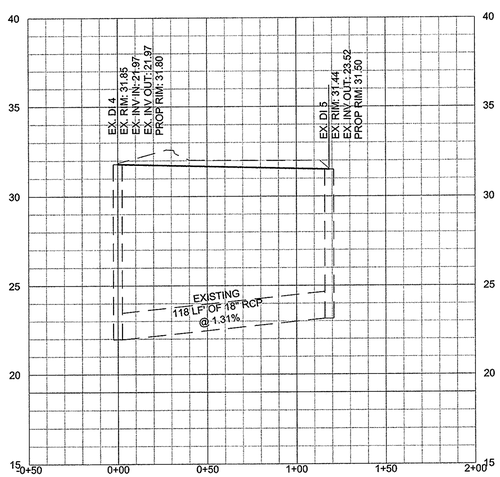

EX DI 5 TO EX DI 4

HORIZONTAL SCALE: 40 FEET PER INCH
VERTICAL SCALE: 4 FEET PER INCH

PROPOSED GROUND
EXISTING GROUND

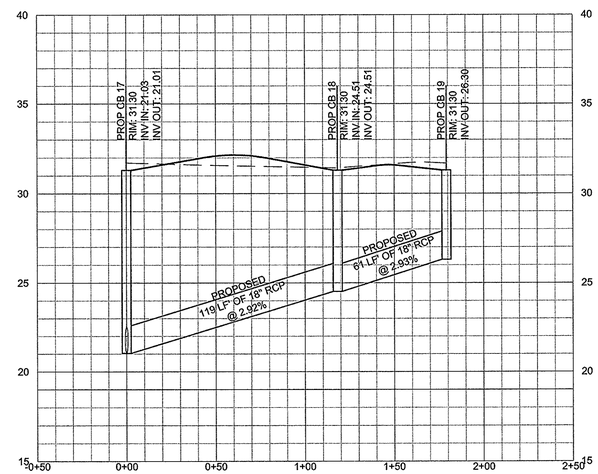

PROP CB 19 TO PROP CB 17

HORIZONTAL SCALE: 40 FEET PER INCH
VERTICAL SCALE: 4 FEET PER INCH

PROPOSED GROUND
EXISTING GROUND

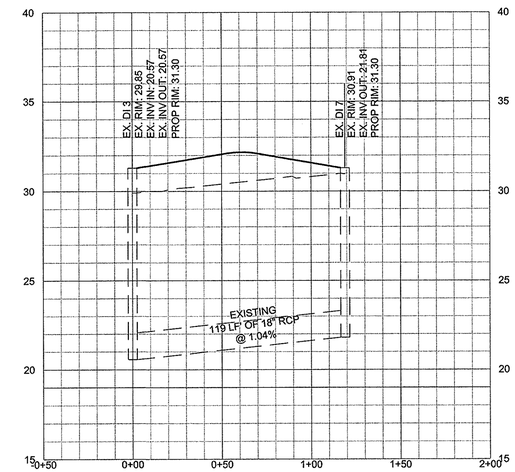

EX. DI 7 TO EX DI 3

HORIZONTAL SCALE: 40 FEET PER INCH
VERTICAL SCALE: 4 FEET PER INCH

PROPOSED GROUND
EXISTING GROUND

LandDesign
223 N Graham Street Charlotte, NC 28202
V: 704.333.0325 F: 704.332.3246
www.LandDesign.com
License #C-0658

LANDDESIGN, INC. CORPORATE SEAL NORTH CAROLINA

NORTH CAROLINA PROFESSIONAL SEAL 37425 ENGINEER
10-3-13

MAYFAIRE
COMMUNITY CENTER PHASE II, LOT I-R
MAYFAIRE I, LLC; WILMINGTON, NC

Storm Drainage Profiles

REVISIONS:
10/3/13 - REVISED PER TRC COMMENTS

DATE: SEPTEMBER 17, 2013
DESIGNED BY: RAK
DRAWN BY: RPG
CHECKED BY: RJK
Q.C. BY: RAK
SCALE: 1" = 40' H; 1" = 4' V
PROJECT #: 1013138

SHEET #:
C4.4

N:_2013\1013138\CAD\Construction Documents\8040storm.dwg, Storm Drainage Profiles, 10/3/2013 2:42:55 PM, rkeidel, LandDesign, Inc.

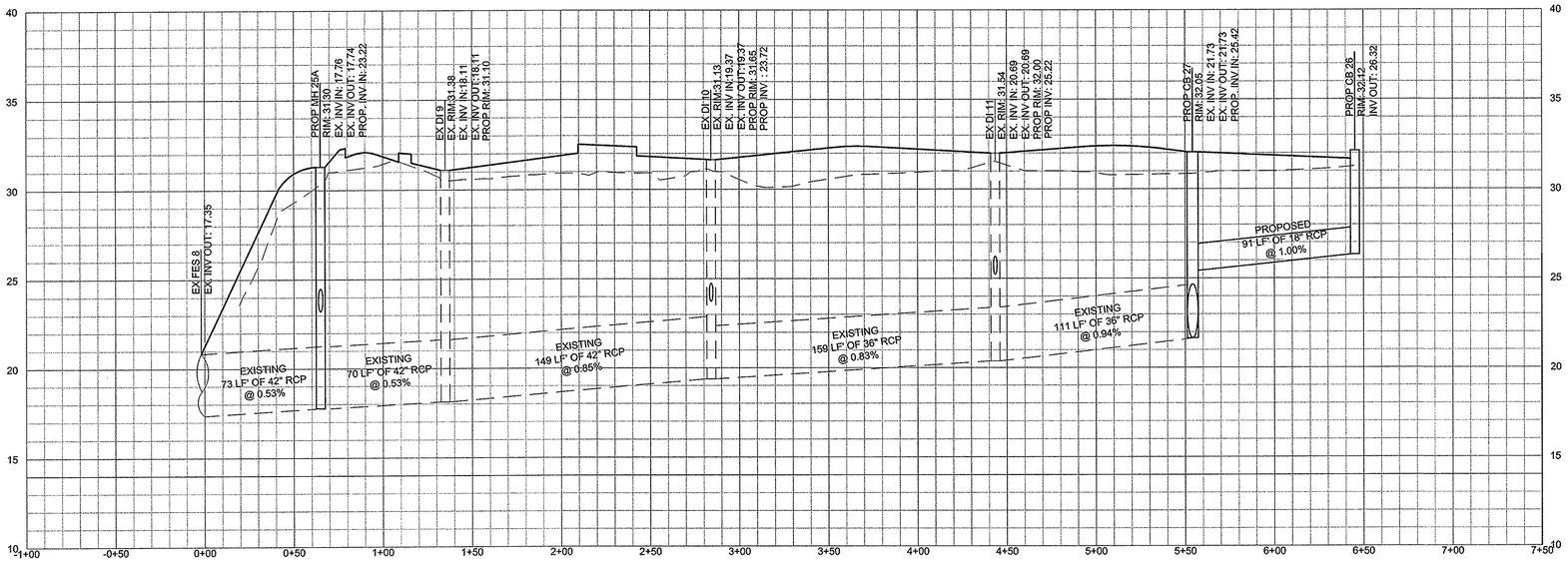

PROP. CB 26 TO FES #8

HORIZONTAL SCALE: 40 FEET PER INCH
VERTICAL SCALE: 4 FEET PER INCH

PROPOSED GROUND
EXISTING GROUND

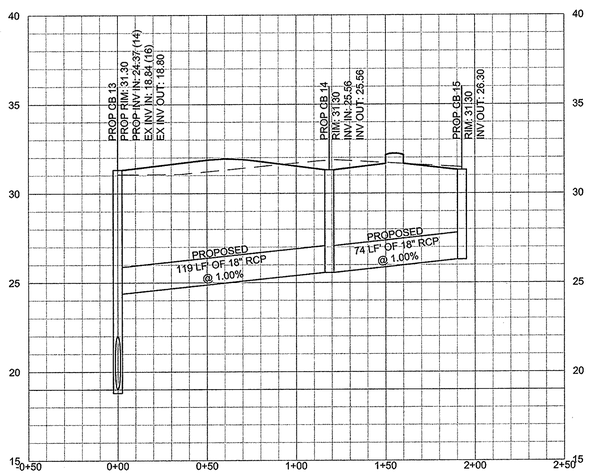

PROP CB 15 TO PROP CB 13

HORIZONTAL SCALE: 40 FEET PER INCH
VERTICAL SCALE: 4 FEET PER INCH

PROPOSED GROUND
EXISTING GROUND

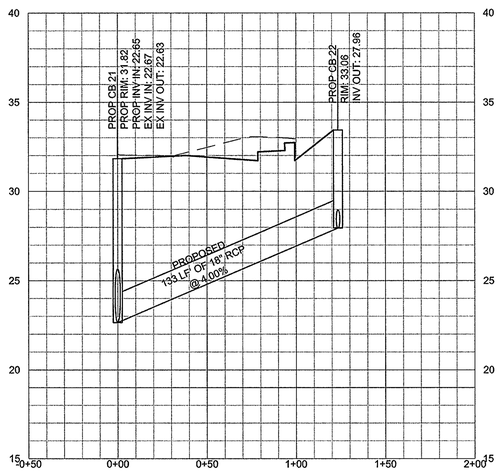

PROP CB 22 TO PROP CB 21

HORIZONTAL SCALE: 40 FEET PER INCH
VERTICAL SCALE: 4 FEET PER INCH

PROPOSED GROUND
EXISTING GROUND

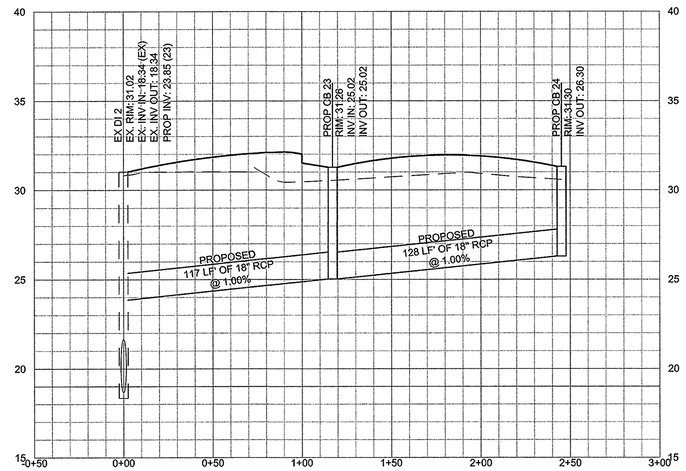

EX. CB 24 TO EX DI 2

HORIZONTAL SCALE: 40 FEET PER INCH
VERTICAL SCALE: 4 FEET PER INCH

PROPOSED GROUND
EXISTING GROUND

LandDesign
223 N Graham Street Charlotte, NC 28202
V: 704.333.0325 F: 704.332.3246
www.LandDesign.com
License #C-0658

LANDDESIGN, INC. CORPORATE SEAL NORTH CAROLINA

NORTH CAROLINA PROFESSIONAL SEAL 37425 ENGINEER ROBERT KEIDEL
10-3-13

MAYFAIRE
COMMUNITY CENTER PHASE II, LOT I-R
MAYFAIRE I, LLC; WILMINGTON, NC

Storm Drainage Profiles

REVISIONS:
10/3/13 - REVISED PER TRC COMMENTS

DATE: SEPTEMBER 17, 2013
DESIGNED BY: RAK
DRAWN BY: RPG
CHECKED BY: RJK
Q.C. BY: RAK
SCALE: 1" = 40' H; 1" = 4' V
PROJECT #: 1013138

SHEET #:
C4.5

N:_2013\1013138\CAD\Construction Documents\8040storm.dwg, Profiles (2), 10/3/2013 2:42:41 PM, rkeidel, LandDesign, Inc.

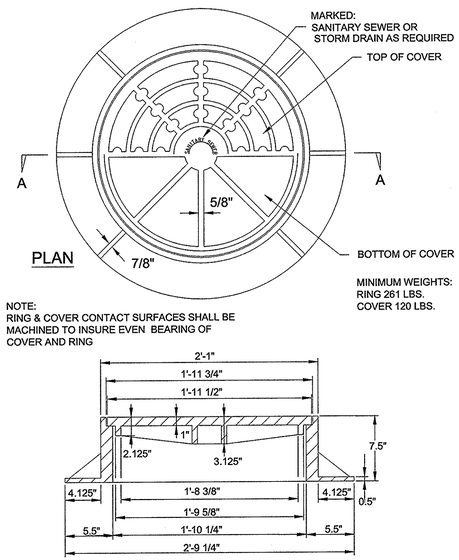

STANDARD MANHOLE RING AND COVER
SD 14-02
NOT TO SCALE

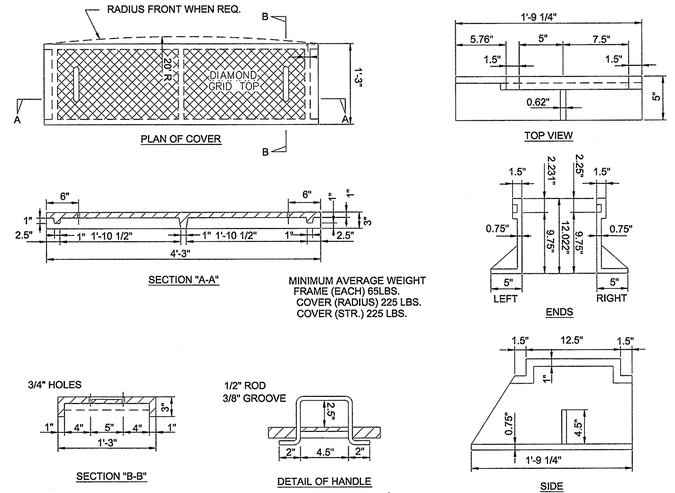

CATCH BASIN CASTINGS
SD 2-16
NOT TO SCALE

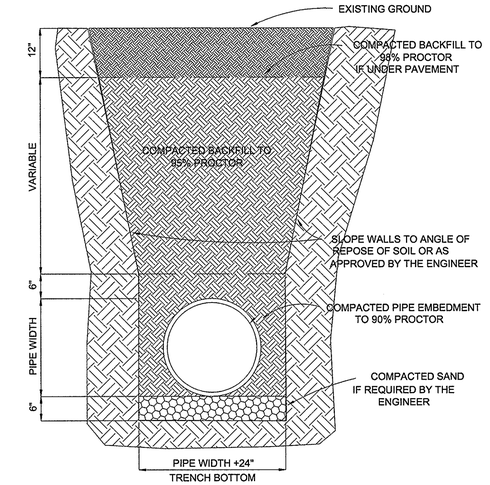

STANDARD PIPE TRENCH DETAIL
SD 1-07
NOT TO SCALE

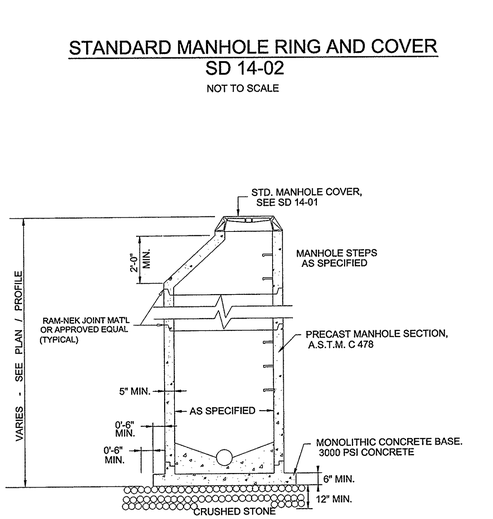

NOTE:
EXTENDED BASE MAY NOT BE REQUIRED WHERE MANHOLES
ARE GREATER THAN 4 FEET INSIDE DIAMETER

NOTE:

USE OF THIS STRUCTURE DOES NOT ALLEVIATE CONTRACTOR FROM THE RESPONSIBILITY TO ADJUST RIM ELEVATIONS AS THEY CHANGE. ANY RE-ORDERING OF NEW PRE-CAST STRUCTURES WILL BE THE FINANCIAL RESPONSIBILITY OF THE CONTRACTOR.

PRECAST MANHOLE
SD 14-11
NOT TO SCALE

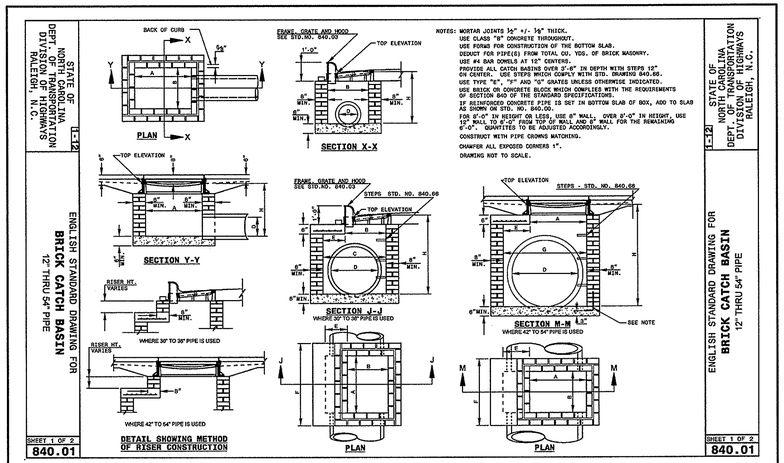

BRICK CATCH BASIN
NOT TO SCALE

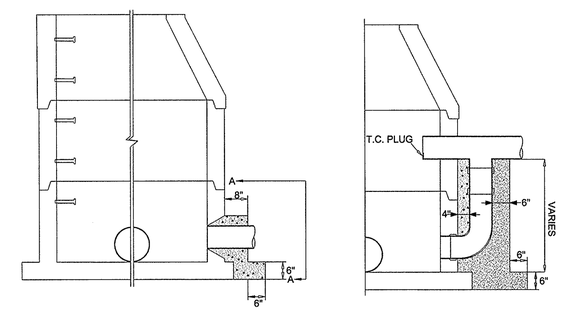

STANDARD PRECAST MANHOLE

DROP PRECAST MANHOLE

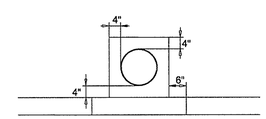

VIEW A

NOTES:

1-DO NOT TAP MANHOLE AT JOINT.
2-BREAK OUT MINIMUM AMOUNT OF MANHOLE WALL TO ALLOW NEW PIPE TO ENTER.
3-CONCRETE TO BE BROKEN FROM INSIDE OF MANHOLE, IF POSSIBLE.
4-PLACE COLLAR AROUND NEW PIPE. COLLAR TO BE BUILT RESTING ON UNDISTURBED SOIL.
5-REPAIR CONCRETE WITH NON-SHRINK CEMENT.
6-SEE SD 14-11 FOR PRE-CAST MANHOLE DETAIL.

STANDARD TAPPING DETAIL PRE-CAST MANHOLE
SD 3-08

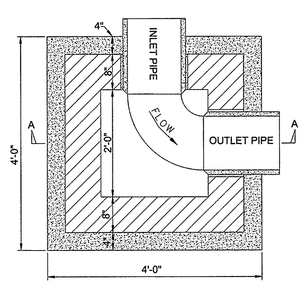

PLAN

NOTE:
FRAME AND GRATE TO BE STANDARD CITY
OF WILMINGTON CAST IRON FRAME AND GRATE
PER SD 14-04

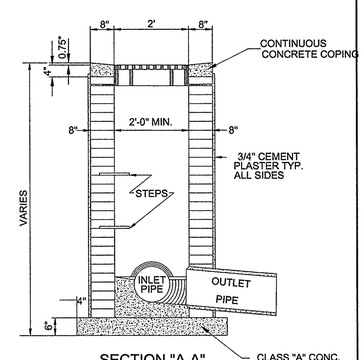

SECTION "A-A"

GRILL BASIN
SD 2-02
NOT TO SCALE

LandDesign
223 N Graham Street Charlotte, NC 28202
V: 704.333.0325 F: 704.332.3246
www.LandDesign.com
License #C-0658

LANDDESIGN, INC. CORPORATE SEAL NORTH CAROLINA

NORTH CAROLINA PROFESSIONAL SEAL 37425 ENGINEER
10-3-13

MAYFAIRE COMMUNITY CENTER PHASE II, LOT I-R
MAYFAIRE I, LLC, WILMINGTON, NC

Storm Drainage Details

REVISIONS:
10/3/13 - REVISED PER TRC COMMENTS

DATE: SEPTEMBER 17, 2013
DESIGNED BY: BAK
DRAWN BY: RPG
CHECKED BY: RJK
SCALE: AS NOTED
PROJECT #: 1013138

SHEET #:
C4.6

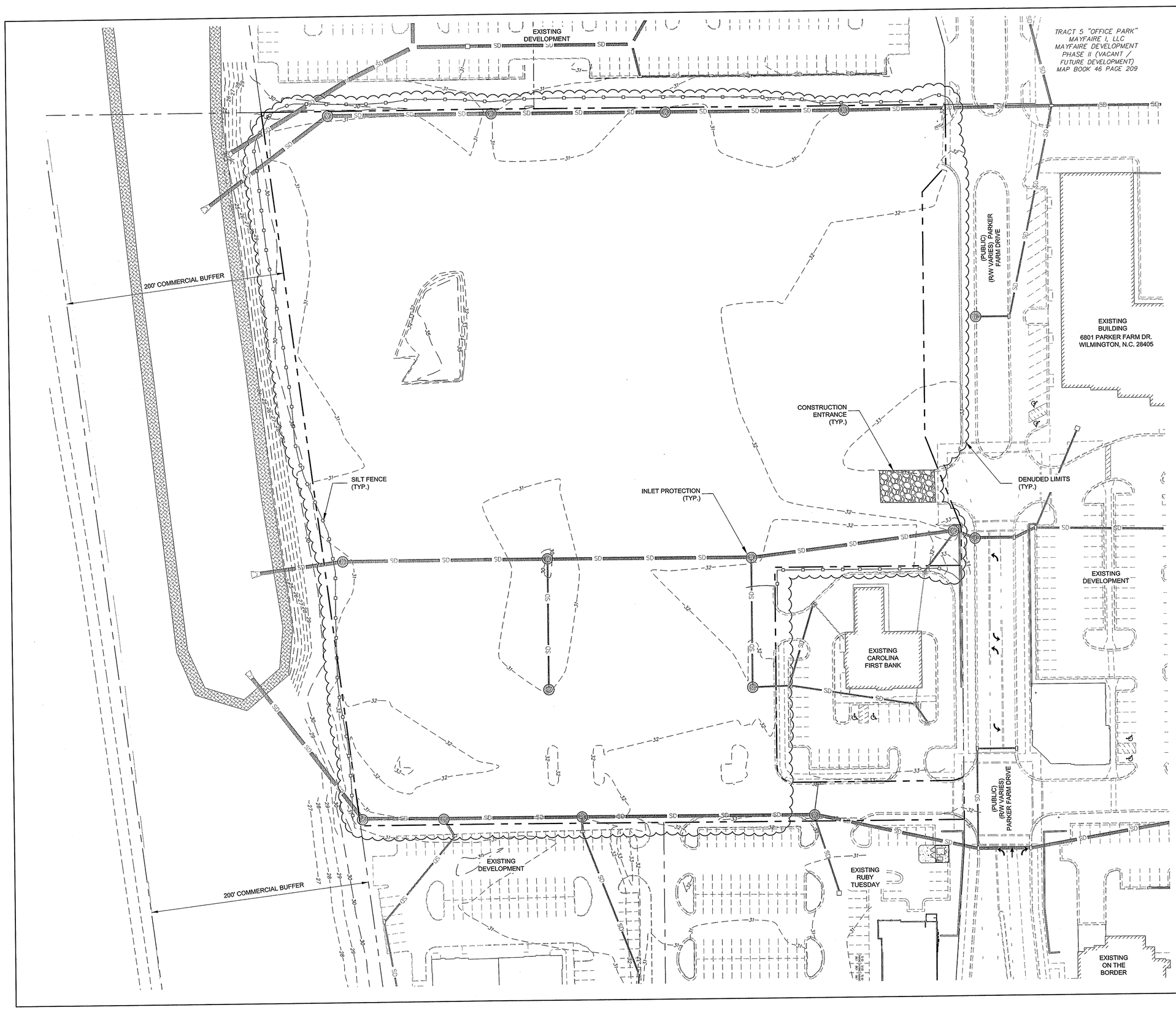

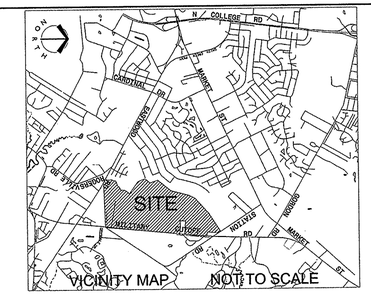

CONSTRUCTION SEQUENCE:

1). OBTAIN GRADING PERMIT AND ALL OTHER APPLICABLE PERMITS PRIOR TO ANY LAND DISTURBING ACTIVITY.

2). FLAG THE CONSTRUCTION LIMITS AND MARK ANY TREES, WETLANDS, OR EXISTING STRUCTURES NOTED TO REMAIN IN THE WETLANDS IMPACTS MITIGATION PLANS.

3). PRIOR TO ANY CLEARING, GRADING OR CONSTRUCTION ACTIVITY, TREE PROTECTION FENCING WILL BE INSTALLED AROUND PROTECTED TREES OR GROVES OF TREES AND NO CONSTRUCTION WORKERS, TOOLS, MATERIALS, OR VEHICLES ARE PERMITTED WITHIN THE TREE PROTECTION FENCING

4). SCHEDULE A PRE-CONSTRUCTION MEETING WITH THE OWNER, ALL CONTRACTORS FOR LAND DISTURBANCE AND/OR EROSION CONTROL AND EROSION CONTROL AUTHORITY PERSONNEL TO DISCUSS THE PROJECT AND THE EROSION CONTROL PLAN.

5). INSTALL TEMPORARY CONSTRUCTION ENTRANCES AS SHOWN ON PLAN.

6). INSTALL PERIMETER SILT FENCE AS SHOWN ON PLAN.

7). INSTALL INLET PROTECTION AS SHOWN ON PLAN.

8). GENERAL CONTRACTOR SHALL ENSURE THAT EROSION CONTROL MEASURES ARE IN PLACE AND FUNCTIONING PRIOR TO GRUBBING AND GRADING OPERATIONS.

9). BEGIN GRADING, INSTALLING ADDITIONAL EROSION CONTROL MEASURES AS INDICATED, AS REQUIRED, AND AS DEEMED NECESSARY BY THE EROSION CONTROL INSPECTOR.

10). ALL EROSION CONTROL DEVICES SHOULD BE CHECKED PERIODICALLY AND AFTER EVERY MAJOR STORM EVENT. IF ANY FAILURES ARE FOUND THEY SHOULD BE REPAIRED AS SOON AS POSSIBLE.

11). COMMENCEMENT OF THE PLAN MAY START AT ANYTIME AS LONG AS ALL ATTRIBUTABLE DEVICES ARE INSTALLED.

12). STABILIZATION IS THE BEST FORM OF EROSION CONTROL. TEMPORARY SEEDING IS NECESSARY TO ACHIEVE EROSION CONTROL ON LARGE DENUDED AREAS AND ESPECIALLY WHEN SPECIFICALLY REQUIRED AS PART OF THE CONSTRUCTION SEQUENCE. THE ANGLE OF CUT-AND-FILL SLOPES MUST BE NO GREATER THAN THAT SUFFICIENT FOR PROPER STABILIZATION. GRADED SLOPES MUST BE VEGETATED OR OTHERWISE STABILIZED WITHIN 21 CALENDAR DAYS OF COMPLETION OF A PHASE OF GRADING.

13). NO DEVICE SHALL BE REMOVED UNTIL SITE IS STABILIZED.

14). ANY DEWATERING DISCHARGES WILL BE DONE OUTSIDE AND AWAY FROM ANY WETLANDS JURIS'S. DISCHARGE LOCATIONS SHALL BE DIRECTED TO STABILIZED UPLAND NATURAL GROUND AREAS. ALL DISCHARGE WILL INFILTRATE INTO THE SOIL. ASSURE DRAINAGE HAS OVERLAND FLOW OVER GRASSY AREAS PRIOR TO CATCHMENT.

TOTAL DENUDED AREA: 8.60 AC.

LEGEND

- CONSTRUCTION ENTRANCE
- DRAINAGE STRUCTURE
- HARDWARE CLOTH AND GRAVEL INLET PROTECTION
- SINGLE ROW ROW SILT FENCE
- LIMITS OF DISTURBANCE

STABILIZATION TIMEFRAMES
(Effective Aug. 3, 2011)

Site Area Description	Stabilization	Timeframe Exceptions
Perimeter dikes, swales, ditches, slopes	7 days	None
High Quality Water (HQW) Zones	7 days	None
Slopes steeper than 3:1	7 days	If slopes are 10' or less in length and are not steeper than 2:1, 14 days are allowed.
Slopes 3:1 or flatter	14 days	7 days for slopes greater than 50' in length.
All other areas with slopes flatter than 4:1	14 days	None, except for perimeters and HQW Zones.

BEFORE YOU DIG!
CALL 1-800-632-4949
N.C. ONE-CALL CENTER
IT'S THE LAW!

NORTH

20 0' 20 40 80

LandDesign.
223 N Graham Street Charlotte, NC 28202
V: 704.333.0325 F: 704.332.3246
www.landdesign.com
License #C-0558

LANDDESIGN, INC. CORPORATE SEAL NORTH CAROLINA

NORTH CAROLINA PROFESSIONAL SEAL 37425 ENGINEER ROBERT KEIDEL
10-3-13

MAYFAIRE COMMUNITY CENTER PHASE II, LOT I-R

MAYFAIRE I, LLC; WILMINGTON, NC

Erosion Control Plan - Phase I

REVISIONS:
10/3/13 - REVISED PER TRC COMMENTS

DATE: SEPTEMBER 17, 2013
DESIGNED BY: RAK
DRAWN BY: RPG
CHECKED BY: RJK
QC BY: RAK
SCALE: 1" = 40'
PROJECT #: 1013138

SHEET #: C5.0

N:\ 2013\1013138\CAD\Construction Documents\8040EC-ph1.dwg, Erosion Control Plan - Phase 1, 10/3/2013 2:42:20 PM, rkeidel, LandDesign, Inc.

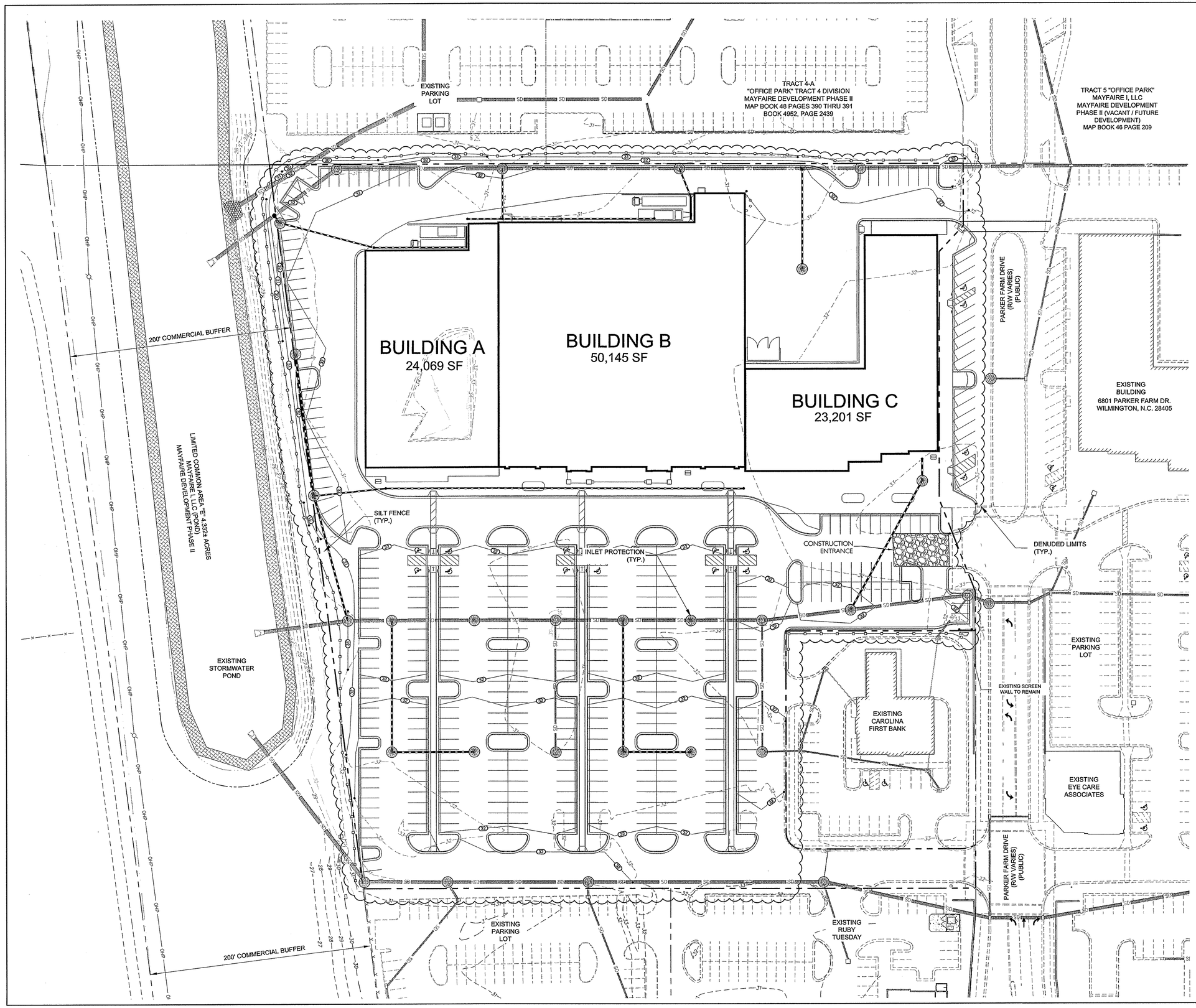

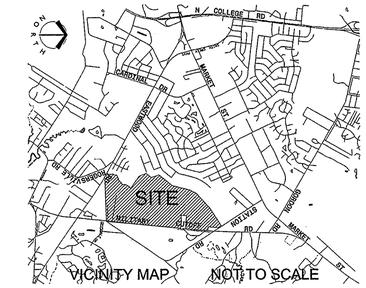

CONSTRUCTION SEQUENCE:

1). OBTAIN GRADING PERMIT AND ALL OTHER APPLICABLE PERMITS PRIOR TO ANY LAND DISTURBING ACTIVITY.

2). FLAG THE CONSTRUCTION LIMITS AND MARK ANY TREES, WETLANDS, OR EXISTING STRUCTURES NOTED TO REMAIN IN THE WETLANDS IMPACTS MITIGATION PLANS.

3). PRIOR TO ANY CLEARING, GRADING OR CONSTRUCTION ACTIVITY, TREE PROTECTION FENCING WILL BE INSTALLED AROUND PROTECTED TREES OR GROVES OF TREES AND NO CONSTRUCTION WORKERS, TOOLS, MATERIALS, OR VEHICLES ARE PERMITTED WITHIN THE TREE PROTECTION FENCING

4). SCHEDULE A PRE-CONSTRUCTION MEETING WITH THE OWNER, ALL CONTRACTORS FOR LAND DISTURBANCE AND/OR EROSION CONTROL, AND EROSION CONTROL AUTHORITY PERSONNEL TO DISCUSS THE PROJECT AND THE EROSION CONTROL PLAN.

5). INSTALL TEMPORARY CONSTRUCTION ENTRANCES AS SHOWN ON PLAN.

6). INSTALL PERIMETER SILT FENCE AS SHOWN ON PLAN.

7). INSTALL INLET PROTECTION AS SHOWN ON PLAN.

8). GENERAL CONTRACTOR SHALL ENSURE THAT EROSION CONTROL MEASURES ARE IN PLACE AND FUNCTIONING PRIOR TO GRUBBING AND GRADING OPERATIONS.

9). BEGIN GRADING, INSTALLING ADDITIONAL EROSION CONTROL MEASURES AS INDICATED, AS REQUIRED, AND AS DEEMED NECESSARY BY THE EROSION CONTROL INSPECTOR.

10). ALL EROSION CONTROL DEVICES SHOULD BE CHECKED PERIODICALLY AND AFTER EVERY MAJOR STORM EVENT. IF ANY FAILURES ARE FOUND THEY SHOULD BE REPAIRED AS SOON AS POSSIBLE.

11). COMMENCEMENT OF THE PLAN MAY START AT ANYTIME AS LONG AS ALL ATTRIBUTABLE DEVICES ARE INSTALLED.

12). STABILIZATION IS THE BEST FORM OF EROSION CONTROL. TEMPORARY SEEDING IS NECESSARY TO ACHIEVE EROSION CONTROL ON LARGE DENUDED AREAS AND ESPECIALLY WHEN SPECIFICALLY REQUIRED AS PART OF THE CONSTRUCTION SEQUENCE. THE ANGLE OF CUT-AND-FILL SLOPES MUST BE NO GREATER THAN THAT SUFFICIENT FOR PROPER STABILIZATION. GRADED SLOPES MUST BE VEGETATED OR OTHERWISE STABILIZED WITHIN 21 CALENDAR DAYS OF COMPLETION OF A PHASE OF GRADING.

13). NO DEVICE SHALL BE REMOVED UNTIL SITE IS STABILIZED.

14). ANY DEWATERING DISCHARGES WILL BE DONE OUTSIDE AND AWAY FROM ANY WETLANDS JURIS'S. DISCHARGE LOCATIONS SHALL BE DIRECTED TO STABILIZED UPLAND NATURAL GROUND AREAS. ALL DISCHARGE WILL INFILTRATE INTO THE SOIL. ASSURE DRAINAGE HAS OVERLAND FLOW OVER GRASSY AREAS PRIOR TO CATCHMENT.

TOTAL DENUDED AREA: 8.60 AC.

LEGEND

- CONSTRUCTION ENTRANCE
- DRAINAGE STRUCTURE
- HARDWARE CLOTH AND GRAVEL INLET PROTECTION
- SINGLE ROW ROW SILT FENCE
- LIMITS OF DISTURBANCE

STABILIZATION TIMEFRAMES
(Effective Aug. 3, 2011)

Site Area Description	Stabilization	Timeframe Exceptions
Perimeter dikes, swales, ditches, slopes	7 days	None
High Quality Water (HQW) Zones	7 days	None
Slopes steeper than 3:1	7 days	If slopes are 50' or less in length and are not steeper than 2:1, 14 days are allowed.
Slopes 3:1 or flatter	14 days	7 days for slopes greater than 50' in length.
All other areas with slopes flatter than 4:1	14 days	None, except for perimeters and HQW Zones.

NORTH

20 0' 20 40 80

BEFORE YOU DIG!
CALL 1-800-632-4949
N.C. ONE-CALL CENTER
IT'S THE LAW!

LandDesign.
223 N. Graham Street Charlotte, NC 28202
V: 704.333.0325 F: 704.333.3246
www.LandDesign.com
License #C-0658

LANDDESIGN, INC. CORPORATE SEAL NORTH CAROLINA

NORTH CAROLINA PROFESSIONAL SEAL 37425 ENGINEER RICHARD P. GRAHAM
10-3-13

MAYFAIRE
COMMUNITY CENTER PHASE II, LOT I-R
MAYFAIRE I, LLC; WILMINGTON, NC

Erosion Control Plan - Phase 2

REVISIONS:
10/3/13 - REVISED PER TRC COMMENTS

DATE: SEPTEMBER 17, 2013
DESIGNED BY: RPG
DRAWN BY: RPG
CHECKED BY: RJK
CHECK SET: WK
SCALE: 1" = 40'
PROJECT #: 1013138

SHEET #:
C5.1

N:_2013\1013138\CAD\Construction Documents\8040EC-ph2.dwg, Erosion Control Plan - Phase 2, 10/3/2013 2:42:11 PM, rkeidel, LandDesign, Inc.

SEEDING SCHEDULE

SEEDING NOTE:

TIME OF EXPOSURE IS ONE OF THE MOST EFFECTIVE MEANS TO CONTROL EROSION. TEMPORARY GROUND COVER MUST BE IMPLEMENTED WITHIN 15 WORKING DAYS OR 30 CALENDAR DAYS AFTER CONSTRUCTION HAS TEMPORARILY HALTED IN THE AREA OF WORK. PERMANENT GROUND COVER MUST BE IMPLEMENTED WITHIN 15 WORKING DAYS OR 90 CALENDAR DAYS ONCE CONSTRUCTION HAS REACHED FINAL GRADE IN THE AREA OF WORK.

PERMANENT SEEDING SPECIFICATIONS PS

LOW MAINTENANCE AREAS

STEEP SLOPES OR STONY, SHALLOW OR DRY SOILS

DATES	TYPE
AUG. 25 - SEPT. 15 FEB. 15 - MAR. 21	REFER TO LANDSCAPING SECT. 02938 IN MATERIAL SPECIFICATIONS MANUAL

GENTLE SLOPES, AVERAGE SOILS

DATES	TYPE
AUG. 25 - SEPT. 15 FEB. 15 - MAR. 21	REFER TO LANDSCAPING SECT. 02936 IN MATERIAL SPECIFICATIONS MANUAL

HIGH MAINTENANCE AREAS

GENTLE SLOPES, SOILS WITH AVERAGE OR BETTER MOISTURE, COOL SITES

DATES	TYPE
AUG. 25 - SEPT. 15	REFER TO LANDSCAPING SECT. 02936 IN MATERIAL SPECIFICATIONS MANUAL

GENTLE SLOPES, DRIER SOILS, PHYSICAL LIMITATIONS

DATES	TYPE
AUG. 25 - SEPT. 15	REFER TO LANDSCAPING SECT. 02936 IN MATERIAL SPECIFICATIONS MANUAL

DATES		TYPE
AUG. 25 - OCT.	GRASS-LINED CHANNELS, DRY SOILS	REFER TO LANDSCAPING SECT. 02936 IN MATERIAL SPECIFICATIONS MANUAL
DATES		TYPE
APRIL 15 - JUNE 30		REFER TO LANDSCAPING SECT. 02936 IN MATERIAL SPECIFICATIONS MANUAL

AMENDMENTS SHALL BE APPLIED AT THE RATE OF 4000 LB/ACRE OF GROUND AGRICULTURAL LIMESTONE AND 1000 LB/ACRE OF 10-10-10 FERTILIZER.
DRY SOIL, GRASS-LINED CHANNELS SHALL USE 3000 LB/ACRE OF GROUND AGRICULTURAL LIMESTONE AND 500 LB/ACRE OF 10-10-10 FERTILIZER.
MULCH SHALL BE APPLIED AT THE RATE OF 4000 LB/ACRE OF STRAW.
STRAW SHALL BE ANCHORED BY TACKING WITH ASPHALT. NETTING OR MULCH ANCHORING TOOL. JUTE OR EXCELSIOR MATTING SHALL BE USED IN GRASS LINED CHANNELS TO CALCULATED HIGH WATER DEPTH.

TEMPORARY SEEDING SPECIFICATIONS TS

DATES	TYPE	RATE	AMENDMENTS
JAN. 1 - MAY 1 FEB. 15 - MAR. 21	RYE (GRAIN) ANNUAL LESPEDEZA OR LOBE	120 LB/ACRE 50 LB/ACRE	AGRICULTURAL LIME-STONE AND 750 LB/ ACRE OF 10-10-10 FERTILIZER
MAY 1 - AUG. 15	GERMAN MILLET	40 LB/ACRE	AGRICULTURAL LIME-STONE AND 750 LB/ ACRE OF 10-10-10 FERTILIZER
AUG. 15 - DEC. 30	RYE (GRAIN)	120 LB/ACRE	AGRICULTURAL LIME-STONE AND 1000 LB/ ACRE OF 10-10-10 FERTILIZER

MULCH SHALL BE APPLIED AT THE RATE OF 4000 LB/ACRE STRAW.
STRAW SHALL BE ANCHORED BY TACKING WITH ASPHALT. NETTING OR MULCH ANCHORING TOOL.

GRADED SLOPES AND FILLS - THE ANGLE FOR GRADED SLOPES AND FILLS SHALL BE NO GREATER THAN THE ANGLE WHICH CAN BE RETAINED BY VEGETATIVE COVER OR OTHER ADEQUATE EROSION CONTROL DEVICES OR STRUCTURES. IN ANY EVENT, SLOPES LEFT EXPOSED SHALL, WITHIN 15 WORKING DAYS OF COMPLETION OF ANY PHASE OF GRADING BE PLANTED OR OTHERWISE PROVIDED WITH GROUND COVER, DEVICES OR STRUCTURES SUFFICIENT TO RESTRAIN EROSION.

GROUND COVER - WHENEVER LAND DISTURBING ACTIVITY IS UNDERTAKEN ON A TRACT COMPRISING MORE THAN ONE ACRE, IF MORE THAN ONE CONTIGUOUS ACRE IS UNCOVERED A GROUND COVER SUFFICIENT TO RESTRAIN EROSION MUST BE PLANTED OR OTHERWISE PROVIDE WITHIN 15 WORKING DAYS ON THAT PORTION OF THE TRACT UPON WHICH FURTHER ACTIVE CONSTRUCTION IS NOT BEING UNDERTAKEN, PROVIDED THAT THIS SHALL NOT APPLY TO CLEARED LAND FORMING THE BASIN OF A RESERVOIR LATER TO BE INUNDATED.

SEEDBED PREPARATION NOTES

1. SURFACE WATER CONTROL MEASURES TO BE INSTALLED ACCORDING TO PLAN. COMPLETE GRADING BEFORE PREPARING SEEDBED.
2. AREAS TO BE SEEDED SHALL BE RIPPED AND SPREAD WITH AVAILABLE TOPSOIL 3" DEEP ON SLOPES 2:1 OR FLATTER. TOTAL SEEDBED PREPARED DEPTH SHALL BE 4" TO 6" DEEP. IF SOILS ARE COMPACTED DURING GRADING LOOSEN TO A DEPTH OF 6" TO 8".
3. LOOSE ROCKS, ROOTS AND OTHER OBSTRUCTIONS SHALL BE REMOVED FROM THE SURFACE TO PREVENT INTERFERENCE WITH ESTABLISHMENT AND MAINTENANCE OF VEGETATION.
4. APPLY LIME ACCORDING TO SOIL TEST RECOMMENDATIONS. SOILS WITH pH HIGHER THAN 6 NEED NOT BE LIMED. IF pH IS NOT KNOWN, APPLY LIME ACCORDING TO SEEDING SPECIFICATIONS BELOW. APPLY LIMESTONE AND INCORPORATE INTO TOP 4" TO 6" OF SOIL.
5. APPLY FERTILIZER ACCORDING TO SOIL TEST RECOMMENDATIONS. IF NO SOIL TEST HAS BEEN PERFORMED, APPLY FERTILIZER ACCORDING TO SEEDING SPECIFICATIONS BELOW.
6. ROUGHEN SEEDBED SURFACE PRIOR TO APPLICATION. GROOVE OR FURROW SLOPES STEEPER THAN 3:1.
7. FOR TEMPORARY SEEDING OF AREAS WHICH WILL NOT BE BROUGHT TO FINAL GRADE FOR MORE THAN 15 WORKING DAYS, FOLLOW THE TEMPORARY SEEDING SPECIFICATIONS BELOW.

FOR THE GROUNDS WITHIN THE PERMANENT STORM DRAINAGE EASEMENT NOR REMOVAL OF ANY OBSTRUCTIONS IN THAT AREA.

MAINTENANCE PLAN

1. ALL EROSION AND SEDIMENT CONTROL PRACTICES WILL BE CHECKED FOR STABILITY AND OPERATION FOLLOWING EVERY RUNOFF-PRODUCING RAINFALL, BUT IN NO CASE LESS THAN ONCE EVERY WEEK. ANY NEEDED REPAIRS WILL BE MADE IMMEDIATELY TO MAINTAIN ALL PRACTICES AS DESIGNED.
2. ALL CONSTRUCTION ENTRANCES WILL BE PERIODICALLY TOPDRESSED WITH AND ADDITIONAL TWO (2) INCHES OF #4 STONE TO MAINTAIN PROPER DEPTH. ANY SEDIMENT THAT IS TRACKED INTO THE STREET WILL BE IMMEDIATELY REMOVED.
3. SEDIMENT WILL BE REMOVED FROM THE SEDIMENT TRAP AND BLOCK AND GRAVEL INLET PROTECTION DEVICE, WHEN STORAGE CAPACITY HAS BEEN APPROXIMATLEY 50% FILLED. GRAVEL WIL BE CLEANED OR REPLACED, WHEN THE SEDIMENT POOL NO LONGER DRAINS PROPERLY.
4. SEDIMEMT WILL BE REMOVED FROM BEHIND THE SEDIMENT FENCE, WHEN IT BECOMES 0.5 FEET DEEP AT THE FENCE. THE SEDIMENT FENCE WILL BE REPAIRED AS NECESSARY TO MAINTAIN A BARRIER.
5. THE SEDIMENT BASIN WILL BE CLEANED OUT WHEN THE LEVEL OF SEDIMENT REACHES 2.0 FEET BELOW THE TOP OF THE RISER. GRAVEL WILL BE CLEANED OR REPLACED, WHEN THE SEDIMENT POOL NO LONGER DRAINS PROPERLY.
6. ALL SEEDED AREAS WILL BE FERTILIZED, RESEEDED AS NECESSARY, AND MULCHED ACCORDING TO SPECIFICATIONS IN THE VEGETATIVE PLAN TO MAINTAIN A VIGOROUS, DENSE VEGATATIVE COVER.

STABILIZATION NOTES

1. ALL SLOPES WILL BE STABILIZED WITHIN FIFTEEN (15) WORKING DAYS OR (30) CALENDAR DAYS, WHICHEVER IS SHORTER.
2. ALL OTHER AREAS WILL BE STABILIZED WITHIN THIRTY (15) DAYS OR (90) CALENDAR DAYS, WHICHEVER IS SHORTER.

EROSION CONTROL NOTES:

1. ALL PROPOSED CONTOURS AND SPOT ELEVATIONS REFLECT ROUGH GRADES.
2. ALL ELEVATIONS ARE IN REFERENCE TO THE SURVEYORS BENCHMARK WHICH MUST BE VERIFIED BY THE GENERAL CONTRACTOR PRIOR TO GROUND BREAKING.
3. ALL EROSION CONTROL MEASURES SHALL BE IN ACCORDANCE WITH THE N.C. EROSION AND SEDIMENT CONTROL PLANNING AND DESIGN MANUAL.
4. PERMANENT CUT AND FILL SLOPES PLACED ON A SUITABLE FOUNDATION SHOULD BE CONSTRUCTED AT 2:1 (HORIZONTAL TO VERTICAL) OR FLATTER. PERMANENT SLOPES OF 3:1 SHOULD BE CONSTRUCTED WHERE MOWING IS DESIRABLE AND AS INDICATED.
5. IF FILL MATERIAL IS BROUGHT ONTO THE PROPERTY OR IF WASTE MATERIAL IS HAULED FROM THE PROPERTY THEN THE CONTRACTOR SHALL DISCLOSE THE LOCATION OF ANY ON-SITE AND/OR OFF-SITE BORROW LOCATION AND/OR WASTE BURIAL LOCATION TO THE EROSION CONTROL INSPECTOR.
6. REFER TO PAVEMENT CROSS-SECTION DATA TO ESTABLISH CORRECT SUB-BASE OR AGGREGATE BASE COURSE ELEVATIONS TO BE COMPLETED UNDER THIS CONTRACT.
7. LIMITS OF CLEARING SHOWN ARE BASED ON CUT AND FILL SLOPES OR OTHER GRADING REQUIREMENTS.
8. ANY GRADING BEYOND THE LIMITS OF CONSTRUCTION SHOWN ON THIS PLAN IS SUBJECT TO A FINE.
9. STABILIZATION IS THE BEST FORM OF EROSION CONTROL. TEMPORARY SEEDING IS NECESSARY TO ACHIEVE EROSION CONTROL ON DENUDED AREAS AND ESPECIALLY WHEN THE CONSTRUCTION SEQUENCE REQUIRES IT. ALL DENUDED AREAS ARE TO BE SEEDED OR LANDSCAPED WITHIN 15 WORKING DAYS OR 60 CALANDER DAYS, WHICHEVER IS SHORTER.
10. CONTRACTOR SHALL INSTALL ALL EROSION CONTROL MEASURES AS INDICATED PRIOR TO GRADING OPERATIONS. NO DEVICE MAY BE REMOVED UNTIL SITE IS STABILIZED.
11. CONTRACTOR SHALL BLEND NEW EARTHWORK SMOOTHLY WITH EXISTING CONTOURS.
12. GRADING MORE THAN 1 ACRE WITHOUT AN APPROVED EROSION CONTROL PLAN IS A VIOLATION AND SUBJECT TO A FINE.
13. SOIL TYPES: Ba - BAYBORO
    Kr - KUREB
    Le - LEON
    Mu - MURVILLE
    On - ONSLOW
    Pm - PAMLICO
    Se - SEAGATE
    To - TORHUNTA
    Wr - WRIGHTSBORO
    Wo - WOODINGTON
    (SEE LAW ENGINEERING REPORT FOR MORE DETAILS)
14. ALL DISTANCES ARE HORIZONTAL GROUND.
15. SITE IS LOCATED IN THE HOWE CREEK & BRADLEY CREEK WATERSHED AREAS (GWA).
16. CONTRACTOR SHALL VERIFY SPOTS AND NOTIFY THE ENGINEER IMMEDIATELY OF ANY GRADE DISCREPANCIES PRIOR TO POURING ANY CURB & GUTTER OR PAVE ANY AREAS THAT MAY BE QUESTIONED.
17. TOTAL SITE AREA: 394.53 AC
    TOTAL DENUDED AREA: ±66.07 AC (PHASE II)
18. CONTRACTOR IS RESPONSIBLE FOR MONITORING THE EROSION CONTROL WORK DURING THE COURSE OF CONSTRUCTION TO INSURE THAT ALL WORK HAS BEEN PROPERLY INSTALLED AND MAINTAINED.

ADDITIONAL GENERAL NOTES:

1. LAND DEVELOPMENT INSPECTOR TO BE GIVEN 24 HOURS NOTICE PRIOR TO START OF CONSTRUCTION.
2. COORDINATE ALL CURB AND STREET GRADES IN INTERSECTION WITH INSPECTOR.
3. ALL ROAD IMPROVEMENTS TO BE COORDINATED WITH ENGINEERING DEPARTMENT PRIOR TO CONSTRUCTION.
4. DEVELOPER WILL PROVIDE STREET SIGNS (9" SIGNS ONLY).
5. SIGHT TRIANGLES ARE THE MINIMUM REQUIRED.
6. IN ROLLING AND HILLY TERRAIN, SWEEPING OF THE STONE BASE AND/OR APPLICATION OF A TACK COAT MAY BE REQUIRED NEAR INTERSECTIONS. THESE REQUIREMENTS WILL BE ESTABLISHED BY THE INSPECTOR BASED ON FIELD CONDITIONS.
7. APPROVAL OF THIS PLAN IS NOT AN AUTHORIZATION TO GRADE ADJACENT PROPERTIES. WHEN FIELD CONDITIONS WARRANT OFF-SITE GRADING, PERMISSION MUST BE OBTAINED FROM THE ADJACENT PROPERTY OWNERS AND NEW HANOVER COUNTY EROSION CONTROL OFFICE.
8. IN ORDER TO ENSURE PROPER DRAINAGE, KEEP A MINIMUM OF 0.5 % SLOPE ON THE CURB.
9. SUBSURFACE DRAINAGE FACILITIES MAY BE REQUIRED IN THE STREET RIGHT-OF-WAY IF DEEMED NECESSARY BY THE INSPECTOR.
10. PIPE SYSTEMS LOCATED WITHIN PERMANENT STORM DRAINAGE EASEMENTS IN THE (CITY/COUNTY) ARE TO BE MAINTAINED BY THE (CITY/COUNTY) IN AN "ON-CALL" MANNER. THE (CITY/COUNTY) WILL NEITHER BE RESPONSIBLE
11. ANY BUILDING WITHIN THE 100+1 BUILDING RESTRICTION FLOOD LINE IS SUBJECT TO THE RESTRICTIONS OF THE (CITY OF WILMINGTON/NEW HANOVER COUNTY) SUBDIVISION ORDINANCE. SECTION 7.200.8. ANY CONSTRUCTION OR USE WITHIN THE AREAS DELINEATED AS FLOODWAY DISTRICT FRINGE BOUNDARY LINE OR FLOODWAY DISTRICT ENCROACHMENT BOUNDARY LINE IS SUBJECT TO THE RESTRICTIONS IMPOSED BY THE FLOODWAY REGULATIONS OF THE CITY OF WILMINGTON AND NEW HANOVER COUNTY.
12. ALL OPENINGS (E.G., DOORS, WINDOWS, VENTS) IN STRUCTURES BUILT ON LOTS (NONE) SHOULD BE LOCATED A MINIMUM OF ONE FOOT ABOVE THE ADJACENT FINISHED GROUND SURFACE. (APPLIES TO LOTS WHICH MAY EXPERIENCE SIGNIFICANT OVERLAND FLOW NOT CONSIDERED IN THE 100+1 FLOOD ANALYSIS.)
13. THE (CITY OF WILMINGTON/NEW HANOVER COUNTY) ENGINEERING DEPARTMENT HAS NOT REVIEWED THE STRUCTURAL STABILITY OF ANY RETAINING WALLS ON THE SITE AND DOES NOT ASSUME RESPONSIBILITY FOR THEM.

SPECIAL CONDITIONS

1. TREE REMOVAL PERMITS MUST BE ACQUIRED FROM THE CITY OF WILMINGTON PRIOR TO CLEARING THE SITE.
2. ALL THE SOIL EROSION CONTROL MEASURES WILL BE INSTALLED AS THE SITE IS CLEARED AND MAINTAINED THROUGHOUT CONSTRUCTION.
3. THIS PERMIT DOES NOT PRECLUDE ANY PERMITS OR APPROVALS WHICH MAY BE NECESSARY SUCH AS DEM WATER QUALITY, C.A.M.A., THE CORPS OF ENGINEERS, DEM SOILD WASTE OR ANY OTHER AGENCIES.
4. NO SEDIMENT SHALL LEAVE THE SITE OR ENTER THE WETLANDS IN ANY EVENT.
5. IF PLAN REVISIONS ARE NECESSARY YOU MUST SUBMIT A COPY TO THE NEW HANOVER COUNTY EROSION CONTROL OFFICE FOR APPROVAL PRIOR TO ANY FIELD CHANGES.
6. IF SOIL IS REMOVED FROM THE SITE, IT MUST BE TAKEN TO AN APPROVED OR PERMITTED SITE TO BE IDENTIFIED BY THE NEW HANOVER COUNTY EROSION CONTROL OFFICE PRIOR TO REMOVAL FROM THE SITE.
7. ALL CITY AND STATE DRAINAGE AND STORMWATER REQUIREMENTS WILL BE ADHERED TO.
8. IF THESE MEASURES FAIL TO ADEQUATELY CONTROL EROSION, MORE RESTRICTIVE MEASURES WILL BE REQUIRED.
9. IF ANY PHASE OF GRADING CEASES FOR MORE THAN 15 WORKING DAYS, THE SITE WILL BE TEMPORARILY STABILIZED.
10. THE APPROVAL OF AN EROSION CONTROL PLAN IS CONDITIONED ON THE APPLICANTS COMPLIANCE WITH FEDERAL AND STATE WATER QUALITY LAWS, REGULATIONS AND RULES.
11. ALL SLOPES WILL BE STABILIZED WITHIN 15 DAYS OF CEASE OF ANY ACTIVITY INCLUDING BERMS.

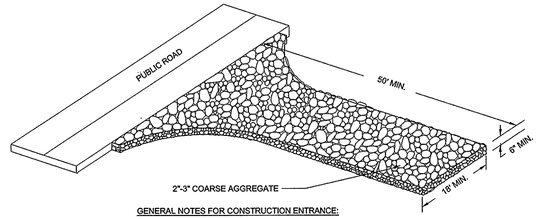

GENERAL NOTES FOR CONSTRUCTION ENTRANCE:

1. A STABILIZED PAD OF CRUSHED STONE SHALL BE LOCATED WHERE TRAFFIC WILL BE ENTERING OR LEAVING A CONSTRUCTION SITE TO OR FROM A PUBLIC STREET.
2. STONE TO BE 2 - 3 INCH WASHED STONE.
3. THE ENTRANCE SHALL BE MAINTAINED IN A CONDITION WHICH WILL PREVENT TRACKING OR FLOWING OF SEDIMENT ONTO PUBLIC STREETS OR EXISTING PAVEMENT. THIS MAY REQUIRE PERIODIC TOP DRESSING WITH ADDITIONAL STONE AS CONDITIONS DEMAND AND REPAIR AND/OR CLEAN OUT OF ANY MEASURES USED TO TRAP SEDIMENT.
4. ALL SEDIMENT SPILLED, DROPPED, WASHED OR TRACKED ONTO PUBLIC STREETS MUST BE REMOVED IMMEDIATELY.
5. WHEN NECESSARY WHEELS MUST BE CLEANED TO REMOVE SEDIMENT SHALL BE MIRAFI 500 OR EQUAL.
   PRIOR TO ENTERING A PUBLIC STREET, WHEN WASHING IS REQUIRED, IT SHALL BE DONE ON AN AREA STABILIZED WITH CRUSHED STONE WHICH DRAINS INTO AN APPROVED SEDIMENT BASIN.

STABILIZED CONSTRUCTION EXIT/ENTRANCE STD.

N.T.S.

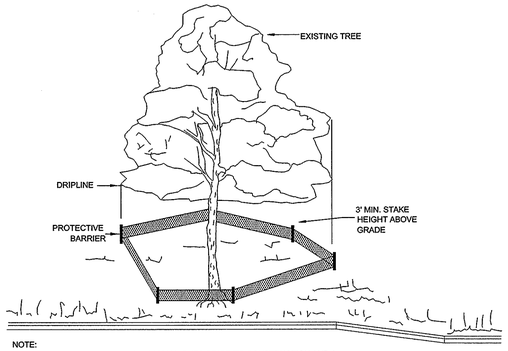

NOTE:
TREES TO BE SAVED WILL BE CLEARLY MARKED PRIOR TO CONSTRUCTION AND A PROTECTIVE BARRIER IS TO BE INSTALLED AT THE DRIPLINE.
DRIP LINE - THE AREA OF SOIL DIRECTLY BENEATH THE TREE EXTENDING OUT TO THE TIPS OF THE OUTERMOST BRANCHES.

METHOD OF TREE PROTECTION DURING CONSTRUCTION

SD 15-08
NOT TO SCALE

JURISDICTIONAL WATERS OF THE U.S. EXIST ON SITE.
NO WORK IS ALLOWED IN THESE AREAS UNTIL PERMITTED BY THE JURISDICTIONAL WATERS SHALL BE COORDINATED THROUGH THE THE PROJECT SURVEYOR.

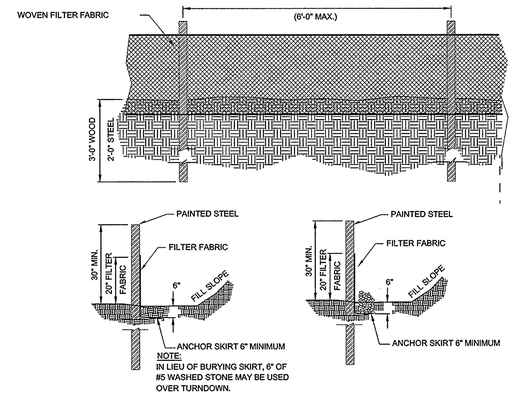

NOTE:
IN LIEU OF BURYING SKIRT, 6" OF #5 WASHED STONE MAY BE USED OVER TURNDOWN.

SILT FENCE NOTES:

1. FILTER FABRIC FENCE SHALL BE A MINIMUM OF 32" IN WIDTH AND SHALL HAVE A MINIMUM OF 6 LINE WIRES WITH 12" STAY SPACING.
2. WOVEN FILTER FABRIC BE USED WHERE SILT FENCE IS TO REMAIN FOR A PERIOD OF MORE THAN 30 DAYS.
3. STEEL POSTS SHALL BE 5'-0" IN HEIGHT AND BE OF THE SELF-FASTENER ANGLE STEEL TYPE.
4. WIRE FABRIC SHALL BE FASTENED TO WOODEN POST WITH NOT LESS THAN #9 WIRE STAPLES 1-1/2" LONG.
5. WASHED STONE SHALL BE USED TO BURY SKIRT WHEN SILT FENCE IS USED ADJACENT TO A CHANNEL, CREEK OR POND.
6. TURN SILT FENCE UP SLOPE AT ENDS.
7. WHEN FABRIC IS USED WITH WIRE MESH 8" CENTERED POSTS MAY BE USE.

MAINTENANCE NOTES FOR SILT FENCE:

1. FILTER BARRIERS SHALL BE INSPECTED BY THE FINANCIALLY RESPONSIBLE PARTY OR HIS AGENT IMMEDIATELY AFTER EACH RAINFALL AND AT LEAST DAILY DURING PROLONGED RAINFALL. ANY REPAIRS NEEDED SHALL BE MADE IMMEDIATELY.
2. SHOULD THE FABRIC DECOMPOSE OR BECOME INEFFECTIVE PRIOR TO THE END OF THE EXPECTED USABLE LIFE AND THE BARRIER STILL IS NECESSARY, THE FABRIC SHALL BE REPLACED PROMPTLY.
3. SEDIMENT DEPOSITS SHOULD BE REMOVED AFTER EACH STORM EVENT OR SILT FENCE SHOULD BE REPLACED. THEY MUST BE REMOVED WHEN DEPOSITS REACH APPROX. HALF THE HEIGHT OF THE BARRIER. ANY SEDIMENT DEPOSITS REMAINING IN PLACE AFTER THE SILT FENCE IS REMOVED SHALL BE DRESSED TO CONFORM TO THE EXISTING GRADE, PREPARED AND SEEDED.

TEMPORARY SILT FENCE STD.

N.T.S.

GENERAL NOTES:

1. UNIFORMLY GRADE A SHALLOW DEPRESSION APPROACHING THE INLET.
2. DRIVE 5-FOOT STEEL POSTS 2 FEET INTO THE GROUND SURROUNDING THE INLET. SPACE POSTS EVENLY AROUND THE PERIMETER OF THE INLET, A MAXIMUM OF 4 FEET APART.
3. SURROUND THE POSTS WITH WIRE MESH HARDWARE CLOTH. SECURE THE WIRE MESH TO THE STEEL POSTS AT THE TOP, MIDDLE, AND BOTTOM. PLACING A 2-FOOT FLAP OF THE WIRE MESH UNDER THE GRAVEL FOR ANCHORING IS RECOMMENDED.
4. PLACE CLEAN GRAVEL (NC DOT #5 OR #57 STONE) ON A 2:1 SLOPE WITH A HEIGHT OF 16 INCHES AROUND THE WIRE, AND SMOOTH TO AN EVEN GRADE.
5. ONCE THE CONTRIBUTING DRAINAGE AREA HAS BEEN STABILIZED, REMOVE ACCUMULATED SEDIMENT, AND ESTABLISH FINAL GRADING ELEVATIONS.
6. COMPACT THE AREA PROPERLY AND STABILIZED IT WITH GROUNDCOVER.

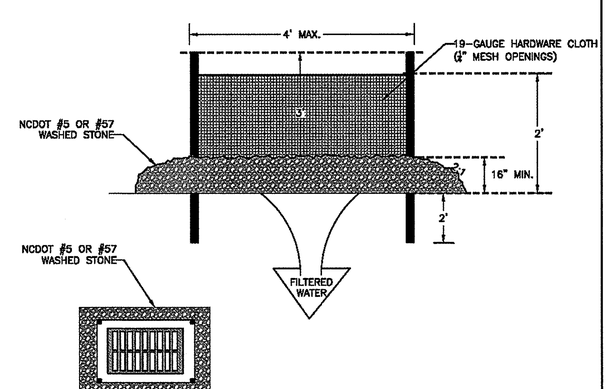

HARDWARE CLOTH AND GRAVEL INLET PROTECTION

N.T.S.

LandDesign.
223 N. Graham Street, Charlotte, NC 28202
V: 704.333.0325 F: 704.332.3246
www.LandDesign.com
License #C-0658

LANDDESIGN, INC. CORPORATE SEAL NORTH CAROLINA

NORTH CAROLINA PROFESSIONAL SEAL 37425 ENGINEER
10-3-13

MAYFAIRE
COMMUNITY CENTER PHASE II, LOT I-R
MAYFAIRE I, LLC; WILMINGTON, NC

Erosion Control Details

REVISIONS:
10/3/13 - REVISED PER TRC COMMENTS

DATE: SEPTEMBER 17, 2013
DESIGNED BY: RAK
DRAWN BY: RPG
CHECKED BY: RJK
QC BY: RAK
SCALE: NTS
PROJECT #: 1013138

SHEET #:
C5.2

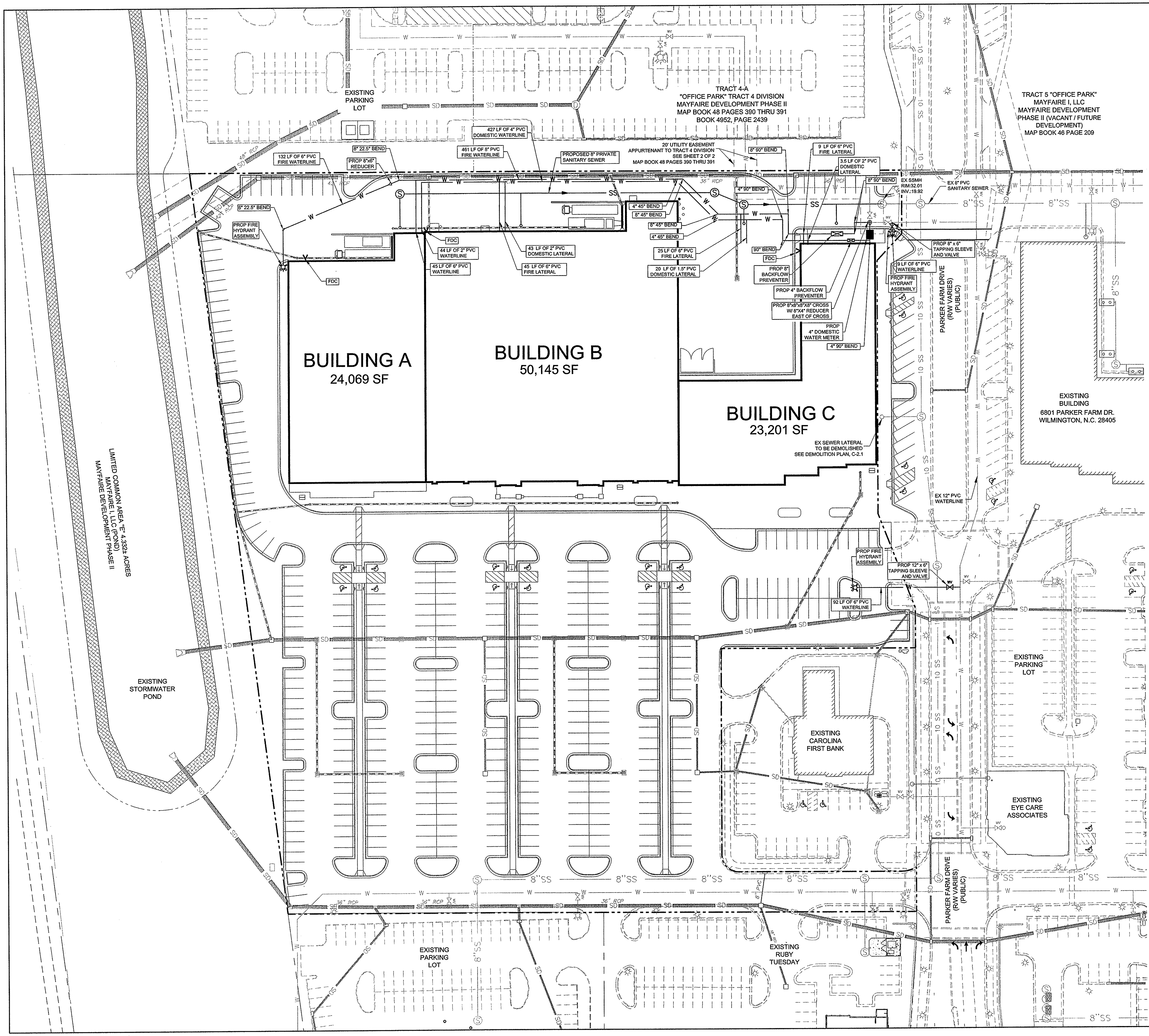

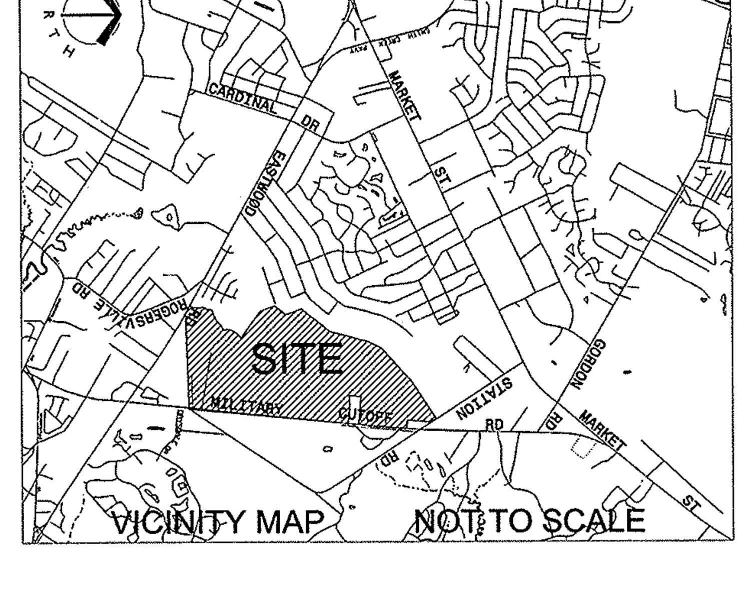

WATER NOTES:

1. SEWER GUARDS REQUIRED AT ALL MANHOLES. STAINLESS STEEL SEWER GUARDS REQUIRED AT MANHOLES LOCATED IN TRAFFIC AREAS.
2. 10' UTILITY EASEMENT PROVIDED ALONG THE FRONTAGE OF ALL LOTS.
3. SERVICES SHALL BE PERPENDICULAR TO MAIN AND TERMINATE AT RIGHT OF WAY LINE. SERVICES IN CUL-DE-SAC ARE REQUIRED TO BE PERPENDICULAR OR MUST ORIGINATE IN MANHOLE AND TERMINATE AT RIGHT OF WAY LINE.
4. ALL SERVICES TYING INTO DUCTILE IRON MAINS SHALL BE CONSTRUCTED OF CLASS 50, D.I.P. 401 PROTECTO CERAMIC LINED.
5. NOTIFY THE ENGINEER AT LEAST 48 HOURS BEFORE STARTING CONSTRUCTION OF SEWER AND WATER FACILITIES. THE ENGINEER SHALL PERIODICALLY INSPECT THE PROGRESS OF INSTALLATION AND SHALL COMPLETE A FINAL WATER AND SEWER INSPECTION. THE ENGINEER SHALL WITNESS PRESSURE TESTING OF THE WATER SYSTEM, AIR AND MANDREL TESTING OF THE SEWER SYSTEM. THE CONTRACTOR SHALL FURNISH, SECURE, AND PROVIDE ALL NECESSARY TESTING MATERIALS, EQUIPMENT, PROCEDURES, AND CERTIFIED LABORATORY TEST RESULTS FOR USE WITH ENGINEERS FINAL CERTIFICATION OF COMPLETION.
6. PRESSURE TEST ON WATER MAINS SHALL NOT EXCEED 200 PSI. REFER TO CFPUA SPECIFICATIONS REQUIREMENTS. DISINFECT FOR TESTING WATER LINES AND PROVIDE ACCEPTABLE BACTERIOLOGICAL TEST FROM A CERTIFIED TESTING LABORATORY FOR USE WITH THE ENGINEERS CERTIFICATION OF COMPLETION.
7. TRENCH BACKFILL AND COMPACTION TESTING SHALL BE PERFORMED BY A CERTIFIED SOILS LABORATORY UNDER ALL PAVED AREAS. BACKFILL MATERIAL FROM THE BOTTOM OF TRENCH TO WITHIN SIX (6) INCHES OF THE SUBGRADE SHALL BE COMPACTED TO 95% OF THE MAX. DRY DENSITY AS DEFINED BY THE STANDARD PROCTOR TEST. ALL MATERIAL WHEN THE TOP 6 INCHES OF THE SUBGRADE LEVEL SHALL HAVE AN IN PLACE DENSITY OF 100%.
8. THE CONTRACTOR SHALL SUPPLY THE ENGINEER WITH WATER & SEWER AS-BUILTS (LOCATION, LENGTH, SLOPE, ETC.) PREPARED BY A REGISTERED LAND SURVEYOR WITH ALL APPURTENANCES AND WATER SERVICE MEASUREMENTS SUITABLE FOR PREPARATION OF FINAL AS-BUILTS.
9. ALL PIPE LENGTHS ARE HORIZONTAL DISTANCES AND ARE APPROXIMATE.
10. CONTRACTOR SHALL VERIFY LOCATION AND DEPTH OF ALL UNDERGROUND UTILITIES PRIOR TO CONSTRUCTION.
11. CONTRACTOR SHALL PROVIDE ALL THE MATERIALS AND APPURTENANCES NECESSARY FOR THE COMPLETE INSTALLATION OF THE UTILITIES. ALL PIPES AND FITTINGS SHALL BE INSPECTED BY THE BUILDING INSPECTOR PRIOR TO BEING COVERED.
12. ALL WORK SHALL COMPLY WITH ALL APPLICABLE CODE'S, REGULATIONS AND OR LOCAL STANDARDS IMPOSED BY LOCAL UTILITY AND CFPUA AS APPLICABLE.
13. ALL WATER LINES SHALL HAVE A MINIMUM COVER OF 36" ABOVE THE TOP OF THE PIPE.
14. CONTRACTOR SHALL ADJUST LOCATION OF PROPOSED WATERLINES AS REQUIRED TO AVOID CONFLICTS WITH STORM SEWER AND OTHER UTILITIES.
15. CONTRACTOR SHALL INSTALL UTILITIES TO WITHIN 5' OF BUILDING. PLUMBING CONTRACTOR SHALL BE RESPONSIBLE FOR UTILITIES WITHIN 5' OF BUILDING.
16. CONTRACTOR SHALL COORDINATE ALL NEW UTILITY TAP LOCATIONS WITH CFPUA. FEES SHALL BE THE RESPONSIBILITY OF THE GENERAL CONTRACTOR.
17. LOCATION, SIZE, AND INVERT ELEVATIONS OF SANITARY SEWER SHALL BE COORDINATED WITH THE APPROVED PLUMBING PLANS FOR THE BUILDINGS.
18. THRUST BLOCKS ARE REQUIRED AT EACH TEE AND ELBOW. ALL THRUST BLOCKS TO COMFORM TO CFPUA UTILITY DEPARTMENT STANDARDS AND SPECIFICATIONS.
19. INSTALLATION AND REPAIR OF UNDERGROUND ELECTRICAL, GAS, AND TELEPHONE UTILITIES AND DISTURBED AREAS SHALL BE THE RESPONSIBILITY OF THE GENERAL CONTRACTOR OR APPLICABLE UTILITY COMPANY. THE DISTURBED AREAS BENEATH EXISTING GRAVEL SHALL BE RECOMPACTED TO THE REQUIRED SPECIFICATIONS, AND THE STONE BASE AND ASPHALT BE RETURNED TO ITS ORIGINAL CONDITION.
20. ALL WATER LINES SHALL BE PVC UNLESS OTHERWISE NOTED.
21. CONTRACTOR SHALL COORDINATE ALL WORK WITH BUILDING/PLUMBING CONTRACTOR FOR PLACEMENT OF ALL SERVICE CONNECTIONS AND APPURTENANCES.
22. SEWER AND WATER CONSTRUCTION SHALL NOT BEGIN UNTIL PERMITS ARE ISSUED BY (NCDENR), AND CHARLOTTE-MECKLENBURG UTILITY DEPARTMENT. THE WORK IS SUBJECT TO INSPECTION AT ALL TIMES BY REPRESENTATIVES OF NCDENR, THE OWNER, AND THE ENGINEER. THE PERMITS REQUIRE A CERTIFICATION OF COMPLETION BY THE ENGINEER AS WELL AS THE OWNER OF THE WATER AND SEWER SYSTEMS PRIOR TO ISSUANCE OF FINAL OPERATIONAL APPROVAL BY NCDENR AND CFPUA.
23. CONTRACTOR SHALL VERIFY THE ACTUAL LOCATION AND ELEVATION FOR ALL UTILITIES, DRAINAGE AND OTHER UNDERGROUND FACILITIES, AND SHALL NOTIFY THE ENGINEER OF ANY DISCREPANCIES OR CONFLICTS PRIOR TO CONSTRUCTION.
24. CONTRACTOR SHALL BE RESPONSIBLE FOR THE COST OF LOCATING AND MARKING ALL EXISTING UNDERGROUND UTILITIES.
25. PVC PIPING SHALL BE INSTALLED WITH APPROVED COPPER TRACER WIRE.
26. RESIDUAL WATER PRESSURE WHICH EXCEEDS 100 PSI MAY REQUIRE PRESSURE REDUCING VALVES ON EACH BUILDING SERVICE.
27. INSTALL FERROUS PIPING FOR BOTH WATER AND SEWER WITHIN 10 FEET OF CROSSING IF:
    - 27.1 SEWER CROSSES OVER WATER, OR
    - 27.2 VERTICAL CLEARANCE BETWEEN SEWER AND WATER IS LESS THAN 18 INCHES.
28. MAINTAIN 10 FEET HORIZONTAL SEPARATION BETWEEN WATER AND SEWER MAINS. IF WATER AND SEWER ARE LAID IN THE SAME TRENCH, THEN THE TOP OF SEWER SHALL BE AT LEAST 18 INCHES BELOW THE BOTTOM OF THE WATER LINE; OR USE FERROUS PIPE FOR BOTH WATER AND SEWER.
29. MAINTAIN 12 INCH VERTICAL SEPARATION BETWEEN STORM AND SANITARY OR INSTALL FERROUS PIPE ON SANITARY WITHIN 10 FEET EACH SIDE OF CROSSING.
30. COORDINATE EXACT LOCATIONS OF VAULTS, METERS, BACK FLOW PREVENTION DEVICES, AND BUILDING SERVICE LINES WITH THE DETAILED ARCHITECTURAL, PLUMBING, AND LANDSCAPING PLANS.
31. CONSTRUCTION SHALL BE IN ACCORDANCE WITH CFPUA STANDARDS AND SPECIFICATIONS.
32. THE CONTRACTOR SHALL VERIFY LOCATION AND DEPTH OF ALL UNDERGROUND UTILITIES PRIOR TO CONSTRUCTION.
33. ALL SHORING SHALL BE IN ACCORDANCE TO OSHA TRENCHING STANDARDS PART 1926, SUBPART P, AS AMENDED TO DATE.
34. IF THE PROPOSED WATER MAIN IS INSTALLED WITHIN 12" IN ANY DIRECTION (VERTICALLY OR HORIZONTALLY) FROM A GAS MAIN, THEN THE CONTRACTOR SHALL CALL THE APPROPRIATE GAS COMPANY AND INFORM THEM.
35. WATER MAIN TO BE INSTALLED WITH A MINIMUM OF 36" OF COVER.
36. TAP AND CONNECTION FEES SHOULD BE COORDINATED WITH CFPUA.

ADDITIONAL NOTES:

1. BACKFLOW PREVENTERS SHALL BE WATTS SERIES 909 REDUCED PRESSURE PRINCIPLE BACKFLOW PREVENTERS COMPLETE WITH STRAINER AND SHUT-OFF VALVES. AIR GAP DRAIN SHALL BE PIPED INTO NEAREST FLOOR DRAIN OR OUTSIDE OF BUILDING TO A CONCRETE SPLASHBLOCK. ALL BACKFLOW PREVENTERS WILL BE HOUSED WITHIN BUILDING.
2. THE CITY OF WILMINGTON ALLOWS WATER MAINS TO BE CURVED BY JOINT DEFLECTION UP TO ONE-HALF OF THE MANUFACTURER'S LIMIT. MANUFACTURER'S DOCUMENTATION SHALL BE PROVIDED TO THE CITY OF WILMINGTON. BENDS THAT EXCEED THE MAXIMUM DEFLECTION MUST BE REPLACED BY STRAIGHT RUNS AND FITTINGS.
3. THIS PROJECT SHALL COMPLY WITH THE CITY OF WILMINGTON CROSS CONNECTION CONTROL REQUIREMENTS. WATER METER(S) CANNOT BE RELEASED UNTIL ALL REQUIREMENTS ARE MET AND THE STATE HAS GIVEN THIER FINAL APPROVAL. CALL 343-3910 FOR INFORMATION.
4. IF THE CONTRACTOR DESIRES CITY WATER FOR CONSTRUCTION HE SHALL APPLY IN ADVANCE FOR THIS SERVICE AND MUST PROVIDE A REDUCED PRESSURE ZONE (RPZ) BACKFLOW PREVENTION DEVICE ON THE DEVELOPERS SIDE OF THE WATER METER BOX.
5. ANY BACKFLOW PREVENTION DEVICES REQUIRED BY THE CITY WILL NEED TO BE ON THE LIST OF APPROVED DEVICES BY USCFCCCHR OR ASSE.
6. ANY IRRIGATION SYSTEM SUPPLIED BY CITY WATER SHALL COMPLY WITH THE CITY'S CROSS CONNECTION CONTROL REGULATIONS. CALL 343-3910 FOR INFORMATION.
7. FDC'S CAN BE NO FURTHER THAN 40' FROM FIRE DEPARTMENT VEHICLE PLACEMENT.
8. FDC'S CAN BE NO FURTHER THAN 150' FROM A FIRE HYDRANT.
9. ALL WEATHER ACCESS ROAD MUST BE MAINTAINED AROUND CONSTRUCTION SITE AT ALL TIMES.
10. NEW HYDRANTS MUST BE BROUGHT INTO SERVICE PRIOR TO COMBUSTIBLE MATERIALS BEING DELIVERED TO THE JOB SITE.
11. TYPE OF CONSTRUCTION OF BUILDING ACCORDING TO THE INTERNATIONAL BUILDING CODE IS II-B.
12. HYDRANTS SHALL BE OF SUFFICIENT NUMBERS TO ACCOMMODATE BASE FIRE FLOW REQUIREMENTS OF STRUCTURE
13. IN ADDITION TO THE STANDARD COMMENTS, ADDITIONAL FIRE PROTECTION AND ACCESSIBILITY REQUIREMENTS MAY BE REQUIRED DUE TO ANY SPECIAL CIRCUMSTANCES CONCERNING THE PROJECT.
14. PRIVATE UNDERGROUND FIRE LINES REQUIRE A SEPARATE UNDERGROUND FIRE LINE PERMIT FROM THE WILMINGTON FIRE AND LIFE SAFETY DIVISION 910-343-0696.

UTILITY DATA:

EXISTING SEWER:	CFPUA
EXISTING WATER:	CFPUA
PROPOSED SEWER:	CFPUA
PROPOSED WATER:	CFPUA

WATER AND SEWER CAPACITY NEEDS:

WATER (CURRENT USE):	0 GPD
WATER (PROPOSED USE):	9,742 GPD = (97,415 SF * 100gal/1000sf)
SEWER (CURRENT USE):	0 GPD
SEWER (PROPOSED USE):	9,742 GPD = (97,415 SF * 100gal/1000sf)

BEFORE YOU DIG!
CALL 1-800-632-4949
N.C. ONE-CALL CENTER
IT'S THE LAW!

LandDesign.
223 N Graham Street Charlotte, NC 28202
V: 704.333.0325 F: 704.332.3246
www.LandDesign.com
License #C-0658

LANDDESIGN, INC. CORPORATE SEAL NORTH CAROLINA

NORTH CAROLINA PROFESSIONAL SEAL 37425 ENGINEER ROBERT A. KEDEL
10-3-13

MAYFAIRE
COMMUNITY CENTER PHASE II, LOT I-R
MAYFAIRE I, LLC; WILMINGTON, NC

Water Distribution Plan

REVISIONS:
10/3/13 - REVISED PER TRC COMMENTS

DATE: SEPTEMBER 17, 2013
DESIGNED BY: RAK
DRAWN BY: RPG
CHECKED BY: RJK
Q.C. BY: RAK
SCALE: 1" = 40'
PROJECT #: 1013138

SHEET #: C6.0

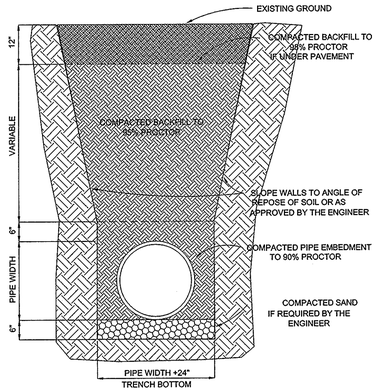

STANDARD PIPE TRENCH DETAIL
SD 1-07
NOT TO SCALE

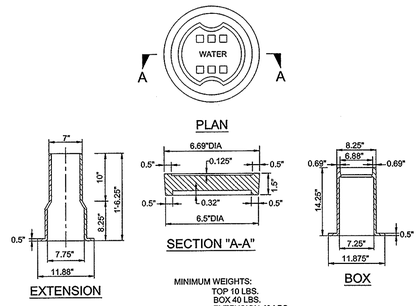

MINIMUM WEIGHTS:
TOP 10 LBS.
BOX 40 LBS.
EXTENSION 40 LBS.

NOTE:
VALVE BOX LID NOT FOR USE IN ROADWAY LOCATIONS.
HEAVY DUTY LID REQUIRED. SEE SD 14-08.

WATER VALVE CASTING
SD 14-07
NOT TO SCALE

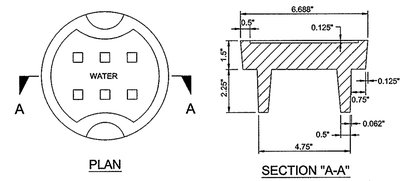

GRE-WVC-6HD, CAST IRON OR EQUAL
APPROX. WEIGHT 17lbs.

HEAVY DUTY VALVE BOX LID
SD 14-08
NOT TO SCALE

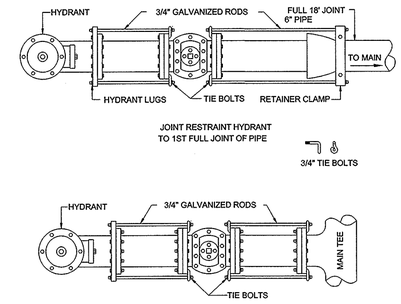

GUIDELINES FOR HYDRANT JOINT RESTRAINT
SD 4-02
NOT TO SCALE

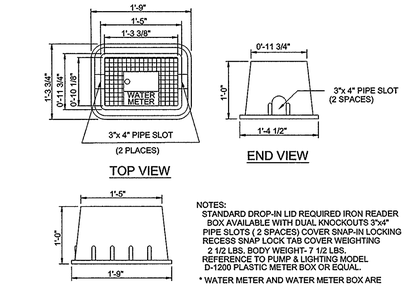

NOTES:
STANDARD DROP-IN LID REQUIRED IRON READER BOX AVAILABLE WITH DUAL KNOCKOUTS 3"x4" PIPE SLOTS (2 SPACES) COVER SNAP-IN LOCKING RECESS SNAP LOCK TAB COVER WEIGHTING 2 1/2 LBS. BODY WEIGHT- 7 1/2 LBS. REFERENCE TO PLIMP & LIGHTING MODEL D-1200 PLASTIC METER BOX OR EQUAL.
* WATER METER AND WATER METER BOX ARE

PVC PIPE PLASTIC METER BOX
SD 4-12
NOT TO SCALE

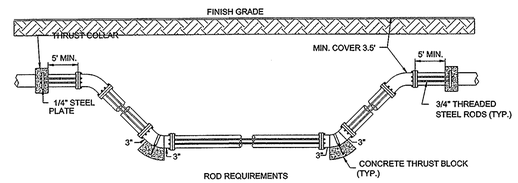

SIZE OF 45 DEGREE BEND	STATIC THRUST IN POUNDS	NUMBER OF RODS REQUIRED
6"	4,328	2
8"	7,694	2
12"	17,312	2
16"	30,779	4
20"	48,091	6
24"	69,252	8

NOTES:
1. ONCE INSTALLED AND TIGHT, THE STEEL RODS AND BOLTS SHALL BE COATED WITH 2 COATS OF BITUMINOUS BASE PAINT.
2. CONCRETE SHALL NOT CONTACT BOLTS OR ENDS OF MECHANICAL JOINT BENDS.
3. TYPICAL MIN. CLEARANCE BETWEEN CONCRETE AND END OF BOLT MUST BE 3".
4. APPROVED OFFSETS CAN BE USED IN THIS APPLICATION.

STANDARD VERTICAL BEND
SD 4-11
NOT TO SCALE

NOTES:
1. WATER METERS ARE TO BE PROVIDED BY THE CITY
2. ALL WATER METERS MUST BE LOCATED WITHIN PUBLIC RIGHT-OF-WAYS AND/OR EASEMENTS
3. WATER METERS SHALL NOT BE LOCATED IN DRIVEWAYS

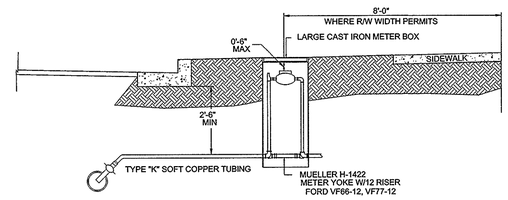

1 1/2", 2" OR 3" WATER SERVICE
SD 4-06
NOT TO SCALE

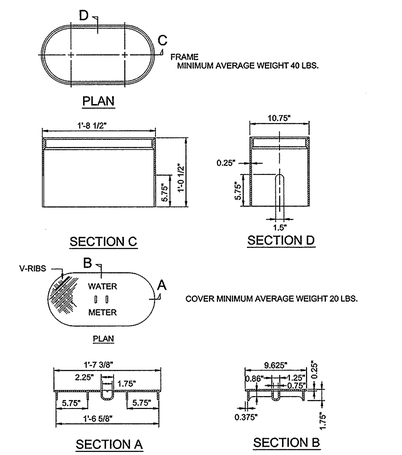

* WATER METER AND WATER METER BOX ARE TO BE ELECTRONIC READ COMPATIBLE.

WATER METER BOX
SD 4-13
NOT TO SCALE

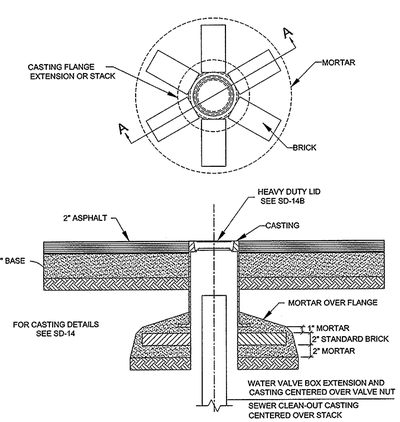

NOTES:
*THIS INSTALLATION REQUIRED WHEN VALVE BOXES AND CLEAN-OUTS ARE LOCATED IN PRESENT OR FUTURE PAVED AREAS.
*PRIOR TO SETTING CASTINGS, NEW INSTALLATIONS WILL REQUIRE 98% COMPACTION OR BACKFILL IN 6" LIFTS.

TYPICAL DETAIL VALVE BOX AND CLEAN-OUT CASTING BASES
SD 15-02
NOT TO SCALE

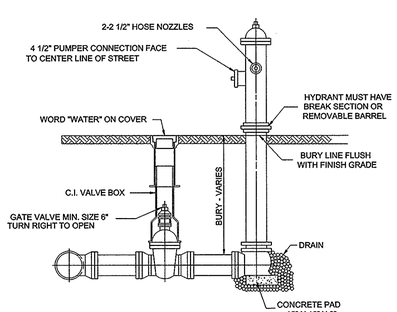

NOTE:
1-SEE SD 4-02 FOR JOINT RESTRAINT REQUIRED
2-DUCTILE IRON PIPE REQUIRED ON ALL HYDRANT BRANCH LINES
3-HYDRANTS SHALL BE:
KENNEDY GUARDIAN; MUELLER CENTURION; AMERICAN DARLING MARL 73; OR APPROVED EQUAL
4-SITE CONTRACTOR SHALL VERIFY FINISHED GRADE PRIOR TO SETTING FIRE HYDRANT

GUIDELINES FOR STANDARD HYDRANT
SD 4-01
NOT TO SCALE

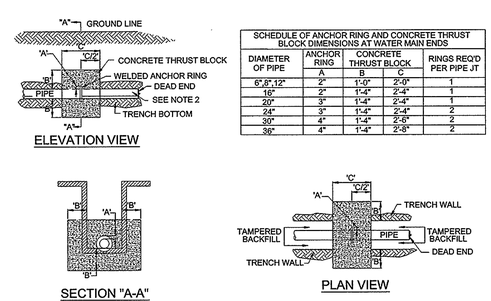

SCHEDULE OF ANCHOR RING AND CONCRETE THRUST BLOCK DIMENSIONS AT WATER MAIN ENDS				
DIAMETER OF PIPE	ANCHOR RING	CONCRETE THRUST BLOCK		RINGS REQ'D PER PIPE JT
	A	B	C	
6",8",12"	2"	1'-0"	2'-0"	1
16"	2"	1'-4"	2'-4"	1
20"	3"	1'-4"	2'-4"	1
24"	3"	1'-4"	2'-4"	2
30"	4"	1'-4"	2'-8"	2
36"	4"	1'-4"	2'-8"	2

NOTES:
1. SIZE OF CONCRETE THRUST BLOCK AROUND ANCHOR RINGS TO BE DETERMINED BY TRENCH DIMENSION PLUS EXTENSION 'B' INTO SIDES AND BOTTOM AS SHOWN IN SCHEDULE. CONCRETE INTO SIDES OF DITCH TO BE POURED AGAINST FIRM UNDISTURBED GROUND. FILL AGAINST BLOCKING TO BE COMPACTED TO 90% PROCTOR FOR LENGTH ALONG THE PIPE OF AT LEAST 6'-0".
2. EACH SIDE FOR PIPE WITH ONE ANCHOR, LOCATE ANCHOR 4'-0" FROM DEADEND AS SHOWN FOR PIPE WITH TWO ANCHORS, LOCATE FIRST ANCHOR 3'-0" BACK FROM DEAD END AND LOCATE SECOND ANCHOR 9'-0" FROM FIRST ANCHOR.
3. WHERE THRUST BLOCK OCCURS, THE TRENCH SHOULD BE AT THE MINIMUM WIDTH.
4. CONCRETE SHALL HAVE MINIMUM 28 DAYS COMPRESSIVE STRENGTH OF 3000 PSI.

GUIDELINES FOR THRUST COLLAR INSTALLATION
SD 4-03
NOT TO SCALE

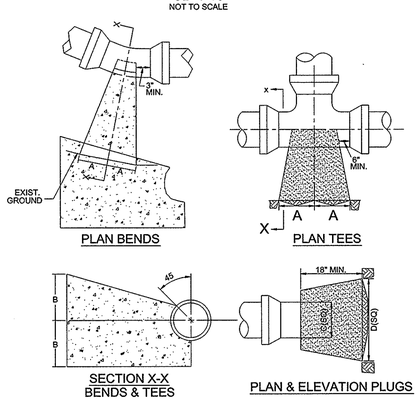

SIZE	90°BENDS		45°BENDS		22 1/2 0°ENDS		TEES		PLUGS	
	A	B	A	B	A	B	A	B	C	D
6"	16"	10"	9"	10"	6"	8"	10"	12"	10"	21"
8"	22"	13"	12"	13"	8"	10"	13"	16"	12"	29"
10"	26"	17"	14"	17"	10"	13"	16"	20"	14"	36"
12"	29"	21"	16"	21"	11"	16"	16"	24"	16"	41"
14"	35"	24"	19"	24"	12"	20"	22"	27"	18"	48"
16"	38"	27"	21"	27"	12"	24"	24"	30"	20"	54"

NOTE: Based on 1.5 x working pressure of 100 PSI plus AWWA Water Hammer.
All bearing surfaces to be carried to undisturbed ground.

STANDARD THRUST BLOCK FOR WATER MAINS
SD 4-10
NOT TO SCALE

LandDesign
223 N Graham Street Charlotte, NC 28202
V: 704.333.0325 F: 704.332.3246
www.LandDesign.com
License #C-0658

LANDDESIGN, INC. CORPORATE SEAL NORTH CAROLINA

NORTH CAROLINA PROFESSIONAL SEAL 37425 ENGINEER
10-3-13

MAYFAIRE COMMUNITY CENTER PHASE II, LOT I-R
MAYFAIRE I, LLC; WILMINGTON, NC
Water Distribution Details

REVISIONS:
10/3/13 - REVISED PER TRC COMMENTS

DATE: SEPTEMBER 17, 2013
DESIGNED BY: MWG
DRAWN BY: ETB
CHECKED BY: RJK
QC BY: RWW
SCALE: NTS
PROJECT #: 1013138

SHEET #: C6.1

N:_2013\1013138\CAD\Construction Documents\8040utilitydetails.dwg, Water Distribution Details, 10/3/2013 2:41:35 PM, rkeidel, LandDesign, Inc.

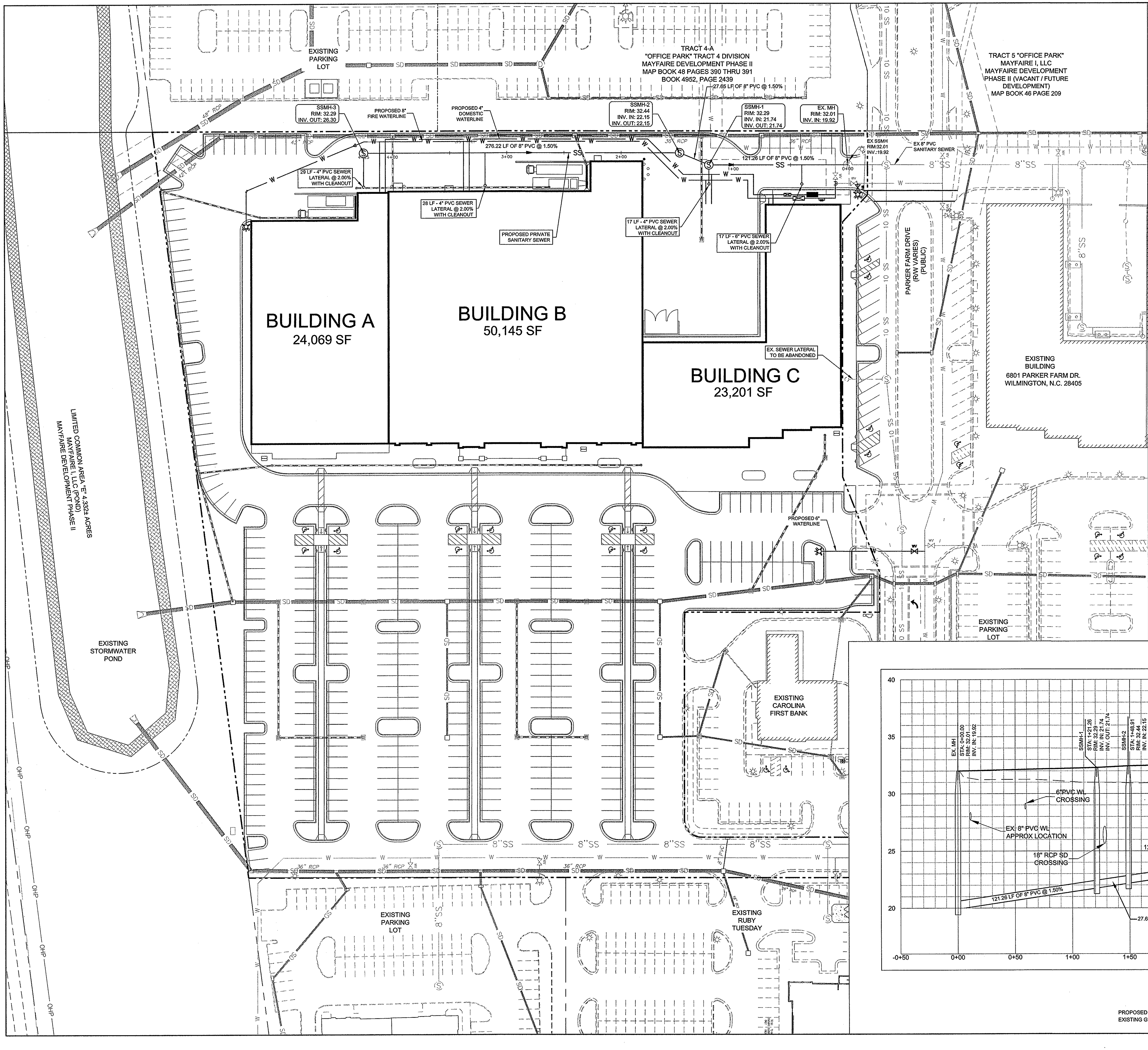

SEWER NOTES:

1. SEWER GUARDS REQUIRED AT ALL MANHOLES. STAINLESS STEEL SEWER GUARDS REQUIRED AT MANHOLES LOCATED IN TRAFFIC AREAS.
2. 10' UTILITY EASEMENT PROVIDED ALONG THE FRONTAGE OF ALL LOTS.
3. SERVICES SHALL BE PERPENDICULAR TO MAIN AND TERMINATE AT RIGHT OF WAY LINE. SERVICES IN CUL-DE-SAC ARE REQUIRED TO BE PERPENDICULAR OR MUST ORIGINATE IN MANHOLE AND TERMINATE AT RIGHT OF WAY LINE.
4. ALL SERVICES TYING INTO DUCTILE IRON MAINS SHALL BE CONSTRUCTED OF CLASS 50, D.I.P. 401 PROTECTO CERAMIC LINED.
5. WATER AND SEWER SERVICE SHALL MEET CAPE FEAR PUBLIC UTILITY AUTHORITY DETAILS AND SPECIFICATIONS
6. ANY IRRIGATION SYSTEM SHALL BE EQUIPPED WITH A RAIN AND FREEZER SENSOR
7. ANY BACKFLOW PREVENTION DEVICES REQUIRED BY THE CFPUA WILL NEED TO BE ON THE LIST OF APPROVED DEVICES BY USCFCCCHR OR ASSE.
8. CONTRACTOR TO FIELD VERIFY EXISTING WATER AND SEWER SERVICE LOCATIONS, SIZES, AND MATERIALS PRIOR TO CONSTRUCTION. ENGINEER TO BE NOTIFIED OF ANY CONFLICTS
9. UNDERGROUND FIRE LINES MUST BE PERMITTED AND INSPECTED BY THE WILMINGTON FIRE DEPARTMENT FROM THE PUBLIC RIGHT-OF-WAY TO THE BUILDING. CONTACT THE WILMINGTON FIRE DEPARTMENT DIVISION OF FIRE AND LIFE SAFETY AT 910-341-0696
10. NOTIFY THE ENGINEER AT LEAST 48 HOURS BEFORE STARTING CONSTRUCTION OF SEWER AND WATER FACILITIES. THE ENGINEER SHALL PERIODICALLY INSPECT THE PROGRESS OF INSTALLATION AND SHALL COMPLETE A FINAL WATER AND SEWER INSPECTION. THE ENGINEER SHALL WITNESS PRESSURE TESTING OF THE WATER SYSTEM, AIR AND MANDREL TESTING OF THE SEWER SYSTEM. THE CONTRACTOR SHALL FURNISH, SECURE, AND PROVIDE ALL NECESSARY TESTING MATERIALS, EQUIPMENT, PROCEDURES, AND CERTIFIED LABORATORY TEST RESULTS FOR USE WITH ENGINEERS FINAL CERTIFICATION OF COMPLETION.
11. TEST SANITARY SEWER LINES FOR DEFLECTION WITH A 5% MANDREL NOT LESS THAN 30 DAYS AFTER COMPLETION OF BACKFILL. PERFORM LOW PRESSURE AIR TESTING IN ACCORDANCE WITH ASTM C-828 AND C-924 ON ALL SEWER MAINS.
12. TRENCH BACKFILL AND COMPACTION TESTING SHALL BE PERFORMED BY A CERTIFIED SOILS LABORATORY UNDER ALL PAVED AREAS. BACKFILL MATERIAL FROM THE BOTTOM OF TRENCH TO WITHIN SIX (6) INCHES OF THE SUBGRADE SHALL BE COMPACTED TO 95% OF THE MAX. DRY DENSITY AS DEFINED BY THE STANDARD PROCTOR TEST. ALL MATERIAL WHEN THE TOP 6 INCHES OF THE SUBGRADE LEVEL SHALL HAVE AN IN PLACE DENSITY OF 100%.
13. THE CONTRACTOR SHALL SUPPLY THE ENGINEER WITH WATER & SEWER AS-BUILTS (LOCATION, LENGTH, SLOPE, ETC.) PREPARED BY A REGISTERED LAND SURVEYOR WITH ALL APPURTENANCES AND WATER SERVICE MEASUREMENTS SUITABLE FOR PREPARATION OF FINAL AS-BUILTS.
14. ALL PIPE LENGTHS ARE HORIZONTAL DISTANCES AND ARE APPROXIMATE.
15. CONTRACTOR SHALL VERIFY LOCATION AND DEPTH OF ALL UNDERGROUND UTILITIES PRIOR TO CONSTRUCTION.
16. CONTRACTOR SHALL PROVIDE ALL THE MATERIALS AND APPURTENANCES NECESSARY FOR THE COMPLETE INSTALLATION OF THE UTILITIES. ALL PIPES AND FITTINGS SHALL BE INSPECTED BY THE BUILDING INSPECTOR PRIOR TO BEING COVERED.
17. ALL WORK SHALL COMPLY WITH ALL APPLICABLE CODE'S, REGULATIONS AND OR LOCAL STANDARDS IMPOSED BY LOCAL UTILITY AND CFPUA AS APPLICABLE.
18. ALL WATER LINES SHALL HAVE A MINIMUM COVER OF 36" ABOVE THE TOP OF THE PIPE.
19. CONTRACTOR SHALL ADJUST LOCATION OF PROPOSED WATERLINES AS REQUIRED TO AVOID CONFLICTS WITH STORM SEWER AND OTHER UTILITIES.
20. CONTRACTOR SHALL INSTALL UTILITIES TO WITHIN 5' OF BUILDING. PLUMBING CONTRACTOR SHALL BE RESPONSIBLE FOR UTILITIES WITHIN 5' OF BUILDING.
21. CONTRACTOR SHALL COORDINATE ALL NEW UTILITY TAP LOCATIONS WITH CFPUA. FEES SHALL BE THE RESPONSIBILITY OF THE GENERAL CONTRACTOR.
22. LOCATION, SIZE, AND INVERT ELEVATIONS OF SANITARY SEWER SHALL BE COORDINATED WITH THE APPROVED PLUMBING PLANS FOR THE BUILDINGS.
23. INSTALLATION AND REPAIR OF UNDERGROUND ELECTRICAL, GAS, AND TELEPHONE UTILITIES AND DISTURBED AREAS SHALL BE THE RESPONSIBILITY OF THE GENERAL CONTRACTOR OR APPLICABLE UTILITY COMPANY. THE DISTURBED AREAS BENEATH EXISTING GRAVEL SHALL BE RECOMPACTED TO THE REQUIRED SPECIFICATIONS, AND THE STONE BASE AND ASPHALT BE RETURNED TO ITS ORIGINAL CONDITION.
24. ALL SEWER LINES SHALL BE PVC UNLESS OTHERWISE NOTED.
25. CONSTRUCTION SHALL BE IN ACCORDANCE WITH CFPUA STANDARDS AND SPECIFICATIONS.
26. THE CONTRACTOR SHALL VERIFY LOCATION AND DEPTH OF ALL UNDERGROUND UTILITIES PRIOR TO CONSTRUCTION.
27. ALL SHORING SHALL BE IN ACCORDANCE TO OSHA TRENCHING STANDARDS PART 1926, SUBPART P, AS AMENDED TO DATE.
28. IF THE PROPOSED SEWER MAIN IS INSTALLED WITHIN 12" IN ANY DIRECTION (VERTICALLY OR HORIZONTALLY) FROM A GAS MAIN, THEN THE CONTRACTOR SHALL CALL THE APPROPRIATE GAS COMPANY AND INFORM THEM.
29. THE CONTRACTOR SHALL SEED AND MULCH AT THE END OF EACH DAY.
30. SEWER AND WATER CONSTRUCTION SHALL NOT BEGIN UNTIL PERMITS ARE ISSUED BY (NCDENR), AND CHARLOTTE-MECKLENBURG UTILITY DEPARTMENT. THE WORK IS SUBJECT TO INSPECTION AT ALL TIMES BY REPRESENTATIVES OF NCDENR, THE OWNER, AND THE ENGINEER. THE PERMITS REQUIRE A CERTIFICATION OF COMPLETION BY THE ENGINEER AS WELL AS THE OWNER OF THE WATER AND SEWER SYSTEMS PRIOR TO ISSUANCE OF FINAL OPERATIONAL APPROVAL BY NCDENR AND CFPUA.
31. CONTRACTOR SHALL VERIFY THE ACTUAL LOCATION AND ELEVATION FOR ALL UTILITIES, DRAINAGE AND OTHER UNDERGROUND FACILITIES, AND SHALL NOTIFY THE ENGINEER OF ANY DISCREPANCIES OR CONFLICTS PRIOR TO CONSTRUCTION.
32. CONTRACTOR SHALL BE RESPONSIBLE FOR THE COST OF LOCATING AND MARKING ALL EXISTING UNDERGROUND UTILITIES.
33. PVC PIPING SHALL BE INSTALLED WITH APPROVED COPPER TRACER WIRE.
34. RESIDUAL WATER PRESSURE WHICH EXCEEDS 100 PSI MAY REQUIRE PRESSURE REDUCING VALVES ON EACH BUILDING SERVICE.
35. SANITARY SEWER MAINS SHALL BE PVC (ASTM D3034-SDR 35) EXCEPT WHERE DUCTILE IRON PIPE IS SHOWN. DUCTILE IRON PIPE SHALL BE BITUMINOUS COATED, CEMENT LINED WITH PUSH-ON JOINTS CONFORMING TO ASA A21.54 CLASS 52.
36. INSTALL FERROUS PIPING FOR BOTH WATER AND SEWER WITHIN 10 FEET OF CROSSING IF:
    36.1 SEWER CROSSES OVER WATER, OR
    36.2 VERTICAL CLEARANCE BETWEEN SEWER AND WATER IS LESS THAN 18 INCHES.
37. MAINTAIN 10 FEET HORIZONTAL SEPARATION BETWEEN WATER AND SEWER MAINS. IF WATER AND SEWER ARE LAID IN THE SAME TRENCH, THEN THE TOP OF SEWER SHALL BE AT LEAST 18 INCHES BELOW THE BOTTOM OF THE WATER LINE; OR USE FERROUS PIPE FOR BOTH WATER AND SEWER.
38. MAINTAIN 12 INCH VERTICAL SEPARATION BETWEEN STORM AND SANITARY OR INSTALL FERROUS PIPE ON SANITARY WITHIN 10 FEET EACH SIDE OF CROSSING.
39. COORDINATE EXACT LOCATIONS OF VAULTS, METERS, BACK FLOW PREVENTION DEVICES, AND BUILDING SERVICE LINES WITH THE DETAILED ARCHITECTURAL, PLUMBING, AND LANDSCAPING PLANS.

UTILITY DATA:

EXISTING SEWER:	CFPUA
EXISTING WATER:	CFPUA
PROPOSED SEWER:	CFPUA
PROPOSED WATER:	CFPUA

WATER AND SEWER CAPACITY NEEDS:

WATER (CURRENT USE):	0 GPD
WATER (PROPOSED USE):	9,742 GPD = (97,415 SF * 100gal/1000sf)
SEWER (CURRENT USE):	0 GPD
SEWER (PROPOSED USE):	9,742 GPD = (97,415 SF * 100gal/1000sf)

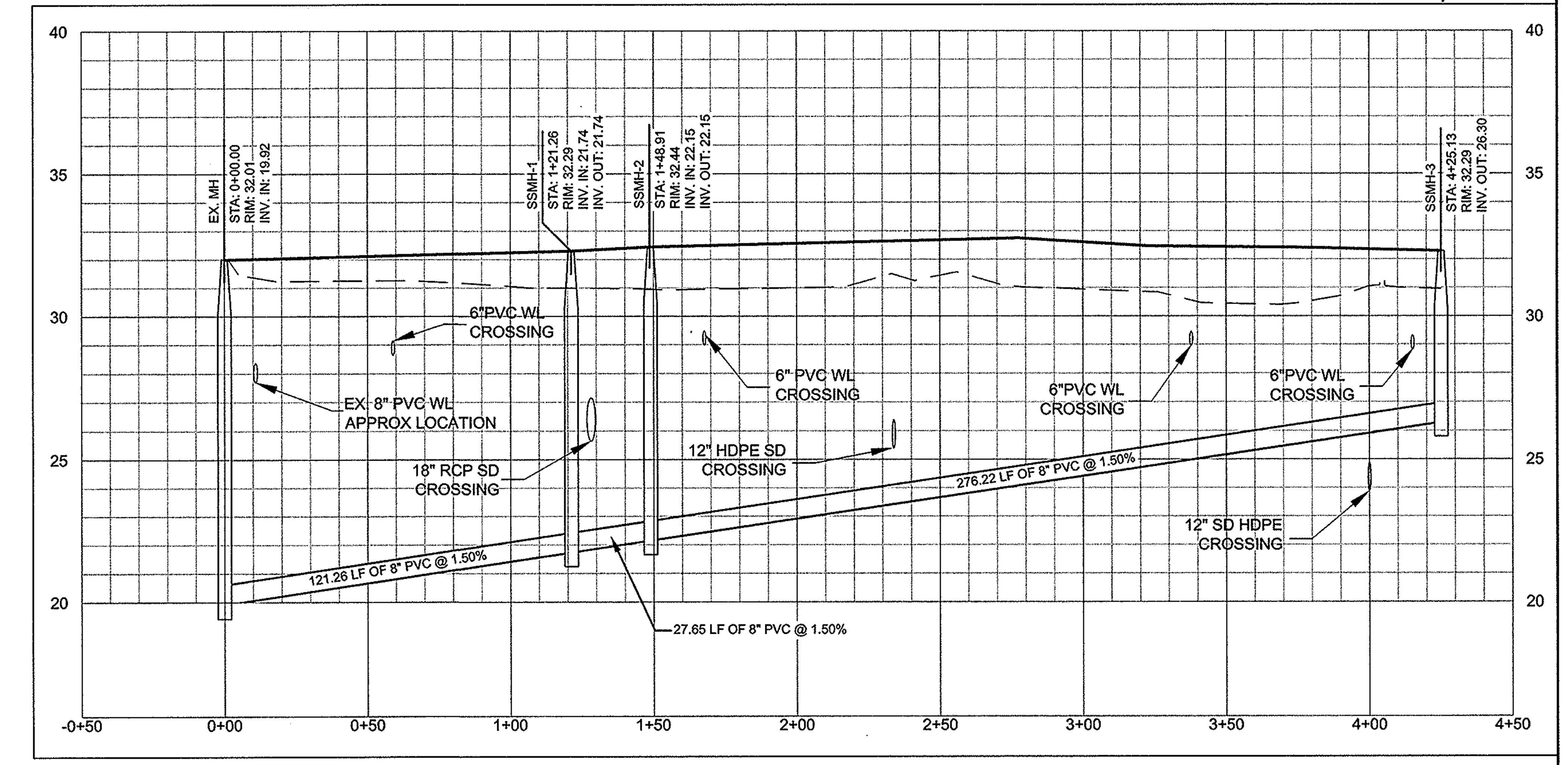

PROP SSMH-3 TO EX. SSMH

HORIZONTAL SCALE: 40 FEET PER INCH
VERTICAL SCALE: 4 FEET PER INCH

PROPOSED GROUND ————
EXISTING GROUND – – – – –

LandDesign.™
223 N Graham Street Charlotte, NC 28202
V: 704.333.0325 F: 704.332.3246
www.LandDesign.com
License #C-0658

LANDDESIGN, INC. CORPORATE SEAL NORTH CAROLINA

NORTH CAROLINA PROFESSIONAL SEAL 37425 ENGINEER ROBERT ... KEIDEL
10-3-13

MAYFAIRE
COMMUNITY CENTER PHASE II, LOT I-R
MAYFAIRE I, LLC; WILMINGTON, NC

Sanitary Sewer Plan

REVISIONS:
10/3/13 - REVISED PER TRC COMMENTS

DATE: SEPTEMBER 17, 2013
DESIGNED BY: RAK
DRAWN BY: RPG
CHECKED BY: RJK
Q.C. BY: RRW
SCALE: 1" = 40'
PROJECT #: 1013138

SHEET #: C6.2

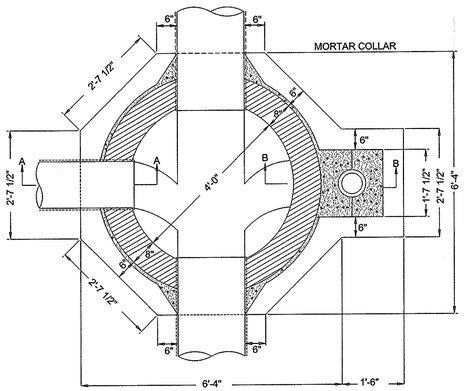

STANDARD SANITARY SEWER MANHOLE
SD 3-01
NOT TO SCALE

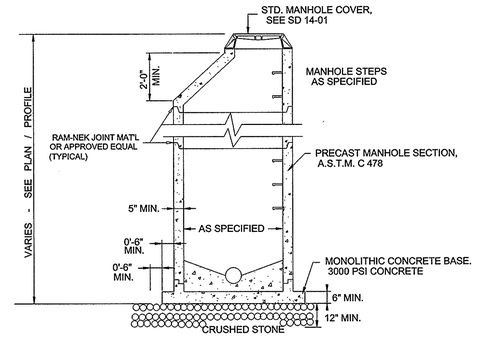

NOTE:
EXTENDED BASE MAY NOT BE REQUIRED WHERE MANHOLES ARE GREATER THAN 4 FEET INSIDE DIAMETER

PRECAST MANHOLE
SD 14-11
NOT TO SCALE

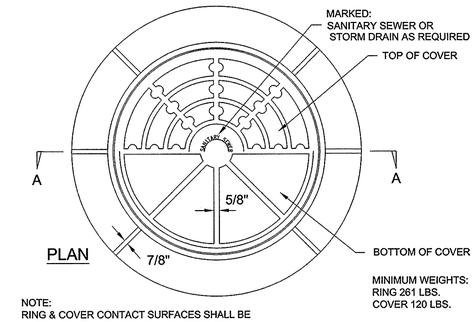

PLAN

NOTE:
RING & COVER CONTACT SURFACES SHALL BE MACHINED TO INSURE EVEN BEARING OF COVER AND RING

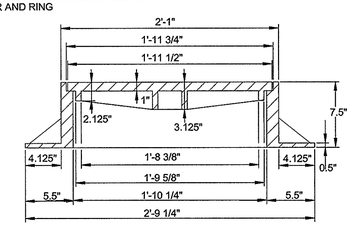

SECTION "A-A"

STANDARD MANHOLE RING & COVER
SD 14-02
NOT TO SCALE

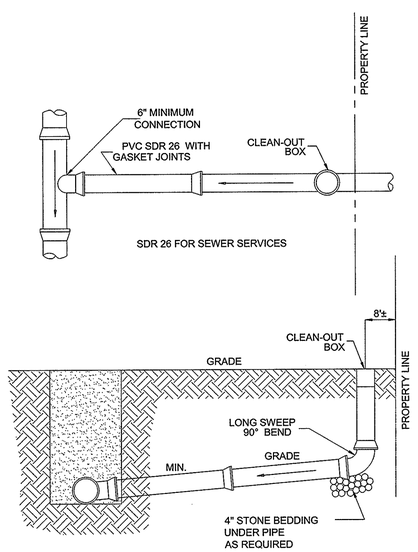

BRANCH CONNECTION GREATER THAN 6' OR WET AREAS

SANITARY SEWER TYPICAL LATERAL SERVICE CONNECTION
SD 3-10
NOT TO SCALE

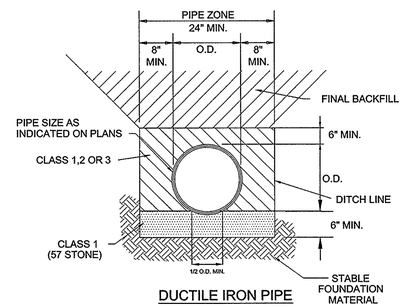

DUCTILE IRON PIPE

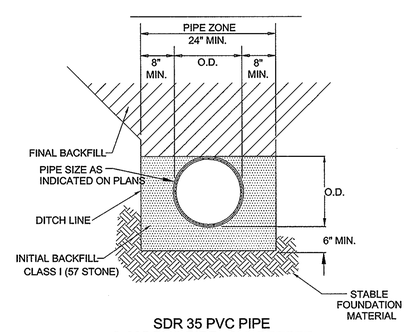

SDR 35 PVC PIPE
C-905 PVC PIPE 12' & DEEPER

PIPE BEDDING DETAILS
SD 3-11
NOT TO SCALE

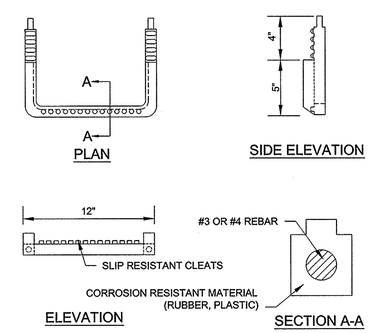

PLAN

SIDE ELEVATION

ELEVATION

SECTION A-A

STANDARD SLIP RESISTANT MANHOLE STEP
SD 14-10
NOT TO SCALE

LandDesign.
223 N. Graham Street Charlotte, NC 28202
Ph 704.333.0325 Fx 704.332.3246
www.LandDesign.com
License #C-0658

LANDDESIGN, INC. CORPORATE SEAL NORTH CAROLINA

NORTH CAROLINA PROFESSIONAL SEAL 37425 ENGINEER RICHARD P. KEIDEL
10-3-13

MAYFAIRE COMMUNITY CENTER PHASE II, LOT I-R

MAYFAIRE I, LLC; WILMINGTON, NC

Sanitary Sewer Details

REVISIONS:
10/3/13 - REVISED PER TRC COMMENTS

DATE: SEPTEMBER 17, 2013
DESIGNED BY: RAK
DRAWN BY: RPC
CHECKED BY: RJK
QC BY: RAK
SCALE: NTS
PROJECT #: 1013138

SHEET #:
C6.3

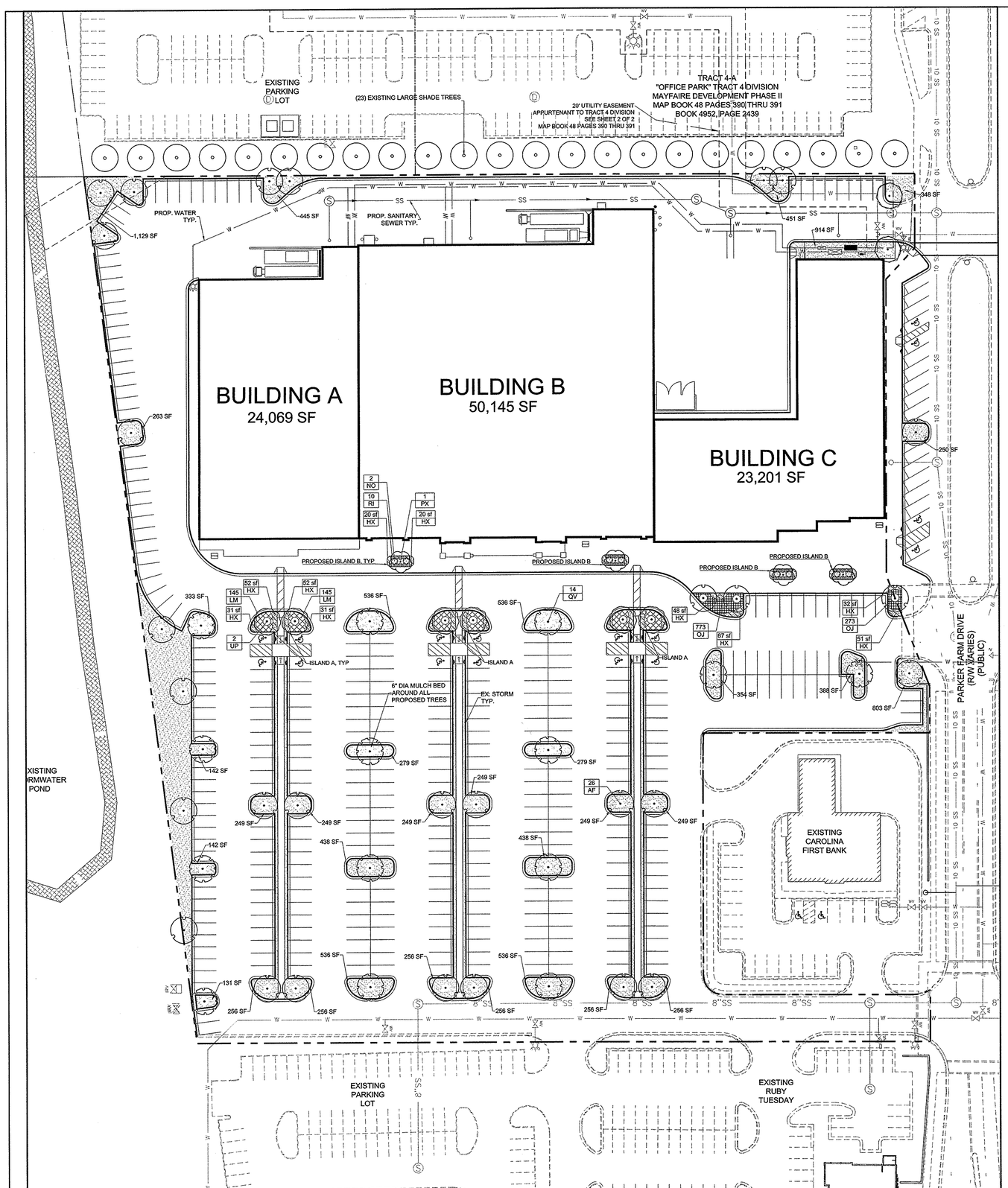

2013-09-23 13:59

PLANT SCHEDULE

LARGE SHADE TREES	CODE	QTY	BOTANICAL NAME / COMMON NAME	CONT	CAL	HGT		REMARKS
	AF	29	Acer freemanii 'Autumn Blaze' / Autumn Blaze Maple	B & B	3"	12'-14'		STRONG LEADER, MATCHING
	QV	14	Quercus virginiana / Southern Live Oak	B & B	3-3.5"	12'-14'		FULL HEAD, MATCHING
	UP	6	Ulmus parvifolia 'Bosque' / Bosque Elm	B & B	3-3.5"	12'-14'		STRONG LEADER, MATCHING
SMALL SHADE TREES	**CODE**	**QTY**	**BOTANICAL NAME / COMMON NAME**	**CONT**	**CAL**	**HGT**		**REMARKS**
	PC	2	Pistacia chinensis	B & B	2-2.5"	10'-12'		STRONG LEADER, MATCHING
	PY	4	Prunus x yedoensis / Yoshino Cherry	B & B	2-2.5"	10'-12'		PINK FLOWERS, MATCHING
SHRUBS	**CODE**	**QTY**	**BOTANICAL NAME / COMMON NAME**	**CONT**	**HGT**	**O.C.**		**REMARKS**
	NO	8	Nerium oleander 'Dwarf' / Dwarf Oleander	CONT.	30"-36"			
	RI	40	Rhaphiolepis indica 'Ballerina' / Ballerina Indian Hawthorn	CONT.	18"-24"			
GROUND COVERS	**CODE**	**QTY**	**BOTANICAL NAME / COMMON NAME**	**CONT**	**O.C.**	**HGT**	**SPACING**	**REMARKS**
	HX	855 sf	Hemerocallis x 'Stella de Oro' / Stella de Oro Daylily	1 gal	18"			
	LM	636 sf	Liriope muscari 'Big Blue' / Big Blue Lilyturf	flat	12"		12" o.c.	
	OJ	446 sf	Ophiopogon japonicus / Mondo Grass	flat	8"		8" o.c.	
	BT2	19,450 sf	Bermuda Tifton 419 OR SIMILAR	seed				
	BT	1,621 sf	Bermuda Tifton 419 OR SIMILAR	sod				

PLANTING REQUIREMENTS:

REQUIRED:
20% OR GREATER SHADE COVERAGE OF PARKING FACILITY.LARGE TREES COVER 707 SF, SMALL TREES COVER 314 SF.

1. PROVIDED LARGE SHADE TREES- 49
2. PROVIDED SMALL SHADE TREES- 6
3. EXISTING LARGE SHADE TREES- 23
4. EXISTING LARGE SHADE TREES WHICH COUNT TOWARD 20% SHADE REQUIREMENT- 11 (23÷2)

44,304 SF COVERAGE OF 207,182.53 SF OF PARKING FACLITY=21.4% SHADE COVERAGE.
REQUIREMENT MET

CAMA LAND USE: WATERSHED RESOURCE PROTECTION

REQUIRED:
LANDSCAPE ISLAND WITHIN 120 FEET OF A PARKING SPACE.
REQUIREMENT MET

REQUIRED:
SINGLE ISLANDS 216 SF SHALL HAVE AT LEAST ONE TREE, ALL DOUBLE PLANTING ISLANDS MEASURING 432 SF SHALL HAVE AT LEAST TWO SMALL SHADE TREES OR ONE LARGE SHADE TREE.
REQUIREMENT MET

REQUIRED:
ALL PLANTING ISLANDS SHALL HAVE GROUNDCOVER OR SHRUBBERY FROM THE APPROVED PLANTING LIST TO COVER THE ENTIRE LANDSCAPE ISLAND.
REQUIREMENT MET

REQUIRED:
AT LEAST 75% OF LARGE TREES DEFINED IN APPROVED PLANTING LIST SHALL HAVE DBH OF AT LEAST 12" AT MATURITY.
REQUIREMENT MET

PROPERTY OWNER:

MAIFAIRE 1, LLC
6835 CONSERVATION WAY
WILMINGTON, NC 28405
(910)256-5131

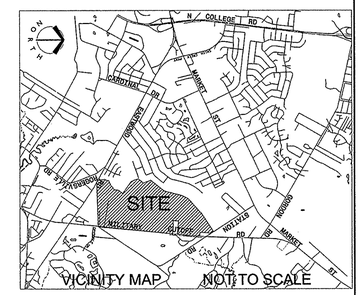

PLANTING NOTES:

1. STREET TREES SHALL BE PLANTED 30FT OR 60 FT ON CENTER. ALL PLANTINGS SHALL COMPLY WITH CURRENT LOCAL ORDINANCES AND GUIDELINES.
2. THIS PLAN IS FOR PLANTING LOCATIONS ONLY. IF FOUND CONDITIONS VARY FROM THIS PLAN, CONTRACTOR TO CONTACT OWNER OR LANDSCAPE ARCHITECT FOR RESOLUTION. FAILURE TO DO SO WILL RESULT IN CONTRACTOR'S LIABILITY TO REPLACE PLANT MATERIALS.
3. REFER TO PLANTING DETAILS FOR ADDITIONAL PLANTING INFORMATION.
4. CONTRACTOR SHALL BE SOLELY RESPONSIBLE FOR ALL PLANT MAINTENANCE, INCLUDING SHRUBS AND GROUNDCOVER, AND SHALL MAINTAIN AREA IN A WEED AND DEBRIS FREE CONDITION, THROUGHOUT GUARANTEE PERIOD.
5. CONTRACTOR TO VERIFY PLANT LIST TOTALS WITH QUANTITIES SHOWN ON PLAN.
6. SIZES SPECIFIED IN THE PLANT LIST ARE MINIMUM SIZES TO WHICH THE PLANTS ARE TO BE JUDGED. FAILURE TO MEET MINIMUM SIZE ON ANY PLANT WILL RESULT IN REJECTION OF THAT PLANT.
7. PLANTING SIZE DETERMINATION:
   7.1. TREES: HEIGHT SHALL BE MEASURED FROM THE CROWN OF THE ROOT BALL TO THE TOP OF MATURE GROWTH. SPREAD SHALL BE MEASURED TO THE END OF BRANCHING EQUALLY AROUND THE CROWN FROM THE CENTER OF THE TRUNK. MEASUREMENTS ARE NOT TO INCLUDE ANY TERMINAL GROWTH. SINGLE TRUNK TREES SHALL BE FREE OF "V" CROTCHES THAT COULD BE POINTS OF WEAK LIMB STRUCTURE OR DISEASE INFESTATION.
8. ALL PLANTS SHALL BE FRESHLY DUG, SOUND, HEALTHY, VIGOROUS, WELL BRANCHED, FREE OF DISEASE, INSECT EGGS, AND LARVAE, AND SHALL HAVE ADEQUATE ROOT SYSTEMS.
9. ALL PLANT MATERIAL SHALL BE SPACED AND LOCATED PER PLANS. IF CONFLICTS ARISE BETWEEN ACTUAL SIZE OF AREA AND PLANS, CONTRACTOR SHALL CONTACT LANDSCAPE ARCHITECT FOR RESOLUTION. FAILURE TO MAKE SUCH CONFLICTS KNOWN TO THE OWNER OR LANDSCAPE ARCHITECT WILL RESULT IN CONTRACTOR'S LIABILITY TO RELOCATE MATERIALS.
10. CONTRACTOR TO SLIGHTLY ADJUST PLANT LOCATIONS IN THE FIELD AS NECESSARY TO BE CLEAR OF DRAINAGE SWALES AND UTILITIES. FINISHED PLANTING BEDS SHALL BE GRADED SO AS TO NOT IMPEDE DRAINAGE AWAY FROM BUILDINGS. IF SIGNIFICANT RELOCATIONS ARE REQUIRED, CONTRACTOR SHALL CONTACT LANDSCAPE ARCHITECT FOR RESOLUTION. FAILURE TO MAKE SUCH RELOCATIONS KNOWN TO THE OWNER OR LANDSCAPE ARCHITECT WILL RESULT IN CONTRACTOR'S LIABILITY OF PLANT MATERIALS.
11. TREE STAKING AND GUYING SHALL BE DONE PER DETAILS. CONTRACTOR SHALL ENSURE THAT TREES REMAIN VERTICAL AND UPRIGHT FOR THE DURATION OF THE GUARANTEE PERIOD. GUYS AND STRAPPING SHALL BE REMOVED AFTER ONE GROWING SEASON.
12. ALL TREE PITS, SHRUB BEDS AND PREPARED PLANTING BEDS ARE TO BE COMPLETELY EXCAVATED IN ACCORDANCE WITH THE PLANTING DETAILS.
13. THE ROOT CROWN TO BE AT FINISHED GRADE OR NO GREATER THAN A MAXIMUM OF ONE INCH HIGHER (AFTER SETTLING) THAN FINISHED GRADE.
14. ALL SUBSTITUTIONS OF PLANT MATERIAL ARE TO BE REQUESTED IN WRITING TO THE LANDSCAPE ARCHITECT AND APPROVED IN WRITING BY THE OWNER PRIOR TO INSTALLATION. FAILURE TO OBTAIN SUBSTITUTION APPROVAL IN WRITING MAY RESULT IN LIABILITY TO THE CONTRACTOR.
15. DEAD PLANTS ARE TO BE REMOVED FROM THE JOB BY THE CONTRACTOR WEEKLY. CONTRACTOR SHALL MAINTAIN AN UPDATED, COMPREHENSIVE LIST OF ALL DEAD MATERIALS REMOVED AND PRESENT A COPY OF THE LIST TO THE OWNER AT THE END OF EVERY MONTH DURING THE CONTRACT PERIOD.
16. TOPSOIL REQUIRED FOR SOIL MIXES AND SPECIAL SEEDING AREAS SHALL BE PROVIDED BY THE CONTRACTOR. CONTRACTOR MUST LOAD, HAUL, MIX, AND SPREAD ALL TOPSOIL AND OTHER SOIL ADDITIVES AS REQUIRED.
17. CONTRACTOR SHALL GUARANTEE ALL LANDSCAPE IMPROVEMENTS, INCLUDING SEEDING, AS REQUIRED BY THE SPECIFICATIONS. CONTRACTOR MUST CONTACT THE OWNER AT LEAST 10 WORKING DAYS IN ADVANCE TO SCHEDULE ACCEPTANCE INSPECTION(S). CONTRACTOR MUST REPLACE ALL DEAD OR UNACCEPTABLE PLANTS DURING THE FOLLOWING RECOMMENDED PLANTING SEASON.
18. ALL TREES SHALL BE LIMBED TO PROVIDE 6' CLEARANCE AT WALKWAYS PER A.D.A REQUIREMENTS.
19. ALL TREES AND SHRUBS SHALL MEET THE NORMAL REQUIREMENTS FOR THE AMERICAN STANDARD FOR NURSERY STOCK, LATEST EDITION, PUBLISHED BY THE AMERICAN ASSOCIATION OF NURSERYMAN (AAN).
20. ADJUST TREE PLANTING LOCATIONS TO AVOID UNDERGROUND UTILITIES WHERE POSSIBLE. CONTACT LANDSCAPE ARCHITECT FOR A COORDINATED SOLUTION FOR ANY UTILITY CONFLICTS. CONTRACTOR SHALL BE LIABLE FOR DAMAGE TO ANY AND ALL PUBLIC OR PRIVATE UTILITIES.
21. ALL LANDSCAPE BEDS TO BE MULCHED TO 3IN DEPTH WITHHARDWOOD MULCH.
22. ALL STRAPPING AND TOP 2/3 OF WIRE BASKET MUST BE CUT AWAY AND REMOVED FROM ROOT BALL PRIOR TO BACKFILLING PLANTING PIT. REMOVE TOP 1/3 OF THE BURLAP FROM THE ROOT BALL.
23. FOR NEW PLANTING AREAS, REMOVE ALL PAVEMENT, GRAVEL SUB-BASE AND CONSTRUCTION DEBRIS; REMOVE COMPACTED SOIL AND ADD 24in NEW TOPSOIL -OR- UNCOMPACTED AND AMEND THE TOP 24in OF EXISTING SOIL TO MEET TOPSOIL/PLANTING MIX STANDARDS FOR TREES (WITHIN ENTIRE MINIMUM AREA OF 274sf PER TREE FOR LARGE MATURING TREES; OR 200sf FOR SMALL MATURING TREES). IN URBAN ZONES, LARGE MATURING TREES CAN ALSO BE PLANTED IN 200sf PLANTERS IF A SPECIFIC SOIL MIX IS USED.
24. LARGE MATURING TREES MAY NOT BE PLANTED UNDER OVERHEAD DISTRIBUTION OR TRANSMISSION LINES. IF TREES CONFLICT WITH POWER LINES OR SIGNS, CALL PLANNING DEPARTMENT TO RESOLVE BEFORE PLANTING.
25. TREES WHICH OVERHANG THE PEDESTRIAN CIRCULATION ROUTES AT THE STREETS OR WITHIN OPEN SPACE AREAS SHALL NOT EXTEND GREATER THAN FOUR INCHES INTO THE CIRCULATION ROUTE AT A HEIGHT LESS THAN 72 INCHES ABOVE THE ADJACENT GRADE.
26. ALL BED EDGES ARE TO BE SHOVEL CUT.
27. PRIOR TO ANY CLEARING, GRADING, OR CONSTRUCTION ACTIVITY, TREE PROTECTION FENCING WILL BE INSTALLED AROUND PROTECTED TREES OR GROVES OF TREES. AND NO CONSTRUCTION WORKERS, TOOLS, MATERIALS, OR VEHICLES ARE PERMITTED WITHIN THE TREE PROTECTION FENCING.
28. ALL PROPOSED VEGETATION WITHIN SITE TRANGLES SHALL NOT INTERFERE WITH CLEAR VISUAL SIGHT LINES FROM 30"-10'.

20 0' 20 40 80

NORTH

BEFORE YOU DIG!
CALL 1-800-632-4949
N.C. ONE-CALL CENTER
IT'S THE LAW!

LandDesign.
223 N. Graham Street Charlotte, NC 28202
Ph 704.333.1123 Fx 704.332.3246
www.LandDesign.com
License #C-0658

LANDDESIGN, INC. CORPORATE SEAL NORTH CAROLINA

NORTH CAROLINA PROFESSIONAL SEAL 37425 REGISTERED LANDSCAPE ARCHITECT
10-3-13

MAYFAIRE II, LOT I-R

MAYFAIRE
COMMUNITY CENTER PHASE II, LOT I-R
MAYFAIRE I, LLC, WILMINGTON, NC

Landscape Plan

REVISIONS:
10/3/13 - REVISED PER TRC COMMENTS

DATE: SEPTEMBER 17, 2013
DESIGNED BY: RAK
DRAWN BY: RPG
CHECKED BY: RJK
SCALE: 1" = 40'
PROJECT #: 10131.38

SHEET #:
C7.0

N:_2013\10131.38\CAD\Construction Documents\8040LandscapePlan.dwg, 7.0 PLAN, 10/3/2013 2:41:03 PM, rkeidel, LandDesign, Inc.

NOTES:

1. REMOVE WIRE AND NYLON TWINE FROM BALL AND CANOPY.
2. SOAK ROOT BALL AND PLANT PIT IMMEDIATELY AFTER INSTALLATION.
3. STAKING IS REQUIRED FOR ALL TREES IN R.O.W. OR UPON REQUEST OF ARBORIST.
4. REMOVE EXCESS SOIL FROM SITE AND DISPOSE OF IN A LEGAL MANNER.
5. RESEED UNMULCHED, DISTURBED AREAS.

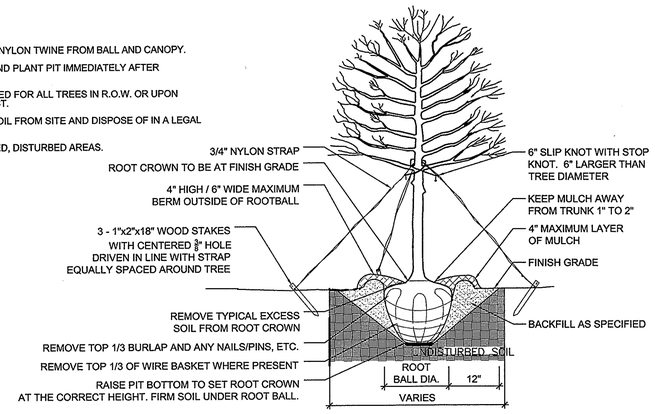

ALL TREES SHALL MEET AMERICAN STANDARD FOR NURSERY STOCK (ANSI Z60.1-2004)

FOR EXAMPLE:	CALIPER	HEIGHT (RANGE)	MAX. HEIGHT	MIN. ROOT BALL DIA.	MIN. ROOT BALL DEPTH
	2"	12-14'	16'	24"	16"
	3"	14-16'	18'	32"	21"

1 / C7.1 TREE PLANTING

NOT TO SCALE

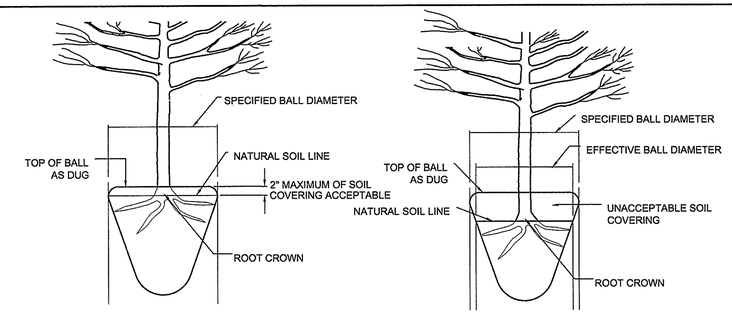

ACCEPTABLE CONDITION
(AS DELIVERED)

UNACCEPTABLE CONDITION
(AS DELIVERED)

NOTE:
A ROOT COLLAR EXCAVATION FOR ALL TREES SPECIFIED WILL BE DONE BY THE CITY ARBORIST TO ENSURE THAT TREES WERE NOT PLANTED/GROWN TOO DEEPLY AT SOURCE (NURSERY). LANDSCAPE CONTRACTOR SHALL HAVE SUPPLIER MARK GROUND LEVEL LINE ABOVE ROOT BALL. IF CITY ARBORIST DETERMINES THAT THERE IS EXCESSIVE SOIL OVER THE ROOT CROWN, THESE TREES WILL BE REJECTED.

3 / C7.1 ROOT CROWN DEPTHS

NOT TO SCALE

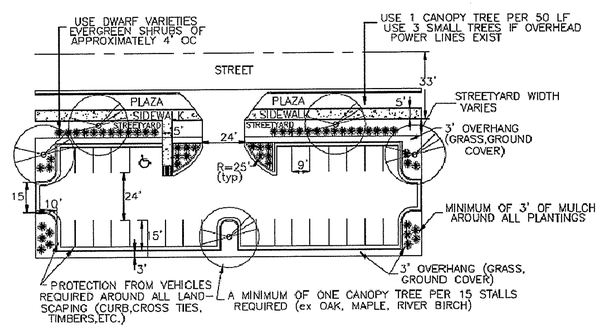

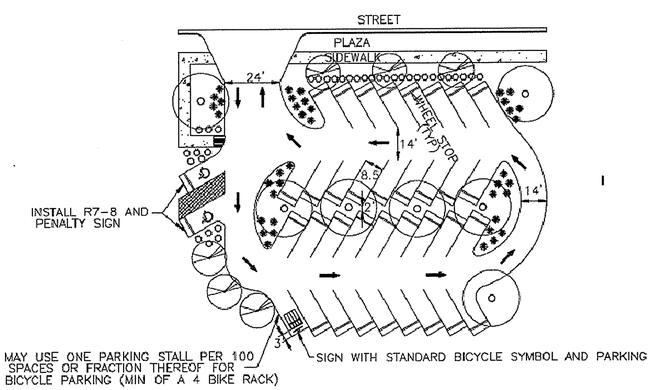

NOTES:
1 – SEE PARKING LOT DESIGN STANDARDS FOR ALTERNATIVE PARKING LOT DIMENSIONS
2 – SEE "LANDSCAPE" FOR RECOMMENDED PLANT LIST T-10.4

2 / C7.1 PARKING FACILITY EQUAL TO OR GREATER THAN 25 STALLS

NOT TO SCALE

NOTES:
1. SCARIFY ROOT MASS OF CONTAINERIZED PLANT MATERIAL.
2. INSTALL CONTAINERIZED PLANTS AT FINISHED GRADE.
3. TAMP PLANTING MIX FIRMLY AS PIT IS FILLED AROUND EACH PLANT BALL.
4. OMIT COLLAR AROUND EACH SHRUB WHEN IRRIGATION SYSTEM IS PRESENT.
5. SOAK EACH PLANT BALL AND PIT IMMEDIATELY AFTER INSTALLATION.

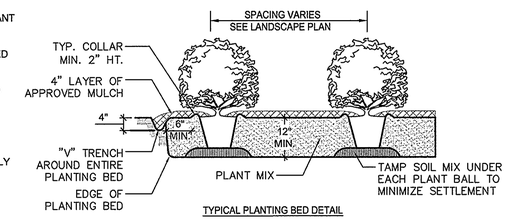

TYPICAL PLANTING BED DETAIL

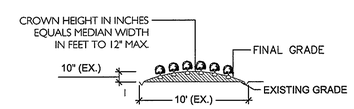

TYPICAL BED CROWNING

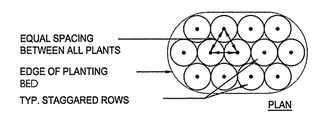

PLAN

4 / C7.1 SHRUB PLANTING BED

NOT TO SCALE

1. No plantings over thirty (30) inches in height allowed in vision clearance.
2. Protection from vehicular traffic provided around all landscaping with a minimum height of six (6) inches.
3. Owner is responsible for maintenance to ensure plant material lives and prospers.
4. Planting plans shall be approved by Landscape Designer prior to installation.
5. Landscaping shall be required at the ends of all parking rows.
6. A low buffer shall be required where parking is within fifty (50) feet of the Right-of-Way.
7. Landscaped islands shall be a minimun width of twelve (12) feet (back of curb to back of curb) and a minimum of two hundred and sixteen (216) square feet.
8. A minimum of fifteen (15) trees 2 inches or greater in diameter as measured 6 inches above ground per disturbed acre.

5 / C7.1 LANDSCAPING NOTES

NOT TO SCALE

LandDesign.
229 N Graham Street Charlotte, NC 28202
V: 704.333.0325 F: 704.332.3246
www.landdesign.com
License #C-0658

LANDESIGN, INC. CORPORATE SEAL NORTH CAROLINA

NORTH CAROLINA PROFESSIONAL ENGINEER SEAL 37425
10-3-13

MAYFAIRE COMMUNITY CENTER PHASE II, LOT I-R

MAYFAIRE I, LLC, WILMINGTON, NC

Landscape Details

REVISIONS:
10/3/13 - REVISED PER TRC COMMENTS

DATE: SEPTEMBER 17, 2013
DESIGNED BY: RAK
DRAWN BY: RPG
CHECKED BY: RJK
Q.C. BY: RAK
SCALE: 1"=10'
PROJECT #: 1013138

SHEET #: C7.1