AMERICAN TOWER® CORPORATION

at&t

ATC SITE NUMBER: 275164

ATC SITE NAME: MAC RAE PARK NC

APPROVED CONSTRUCTION PLAN

NAME	DATE
PLANNING	
TRAFFIC	
FIRE	

CITY OF WILMINGTON NORTH CAROLINA

Public Services Engineering Division

APPROVED PLAN - NO PERMIT REQUIRED

Signed: _____

AT&T SITE NUMBER: 478-104

AMERICAN TOWER® CORPORATION

PROPOSED STEALTH UNIPOLE & WIRELESS TELECOMMUNICATIONS FACILITY

DIG ALERT:

CALL 811 FOR UNDERGROUND UTILITIES PRIOR TO DIGGING OR (800) 632-4949

EMERGENCY:

CALL 911

Know what's below. Call before you dig.

ISSUED FOR CONSTRUCTION

VICINITY MAP

SCALE: 1" = 20 MILES

NORTH

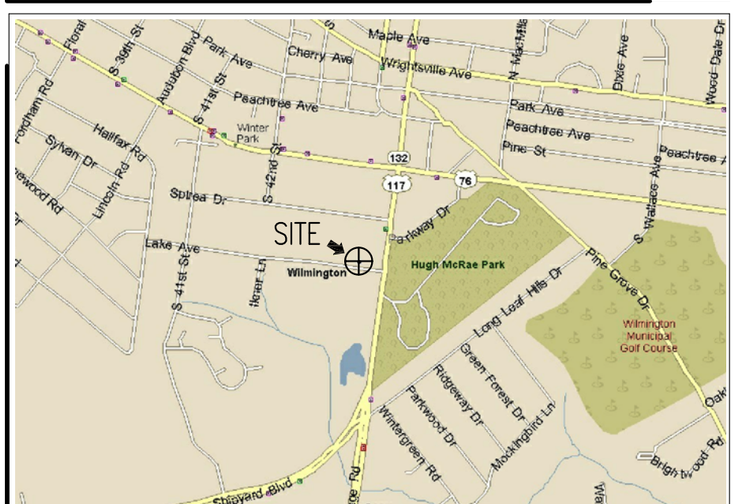

LOCAL MAP

SCALE: 1" = 2000'

NORTH

DIRECTIONS TO SITE:

DEPART 496 LONG POINT RD, MT PLEASANT, SC 29464 ON LONG POINT RD (EAST) 3.5 MI. TURN LEFT (NORTH-EAST) ONTO US-17 [US-701] 50.3 MI. KEEP RIGHT ONTO LOCAL ROAD(S) 32 YDS. BEAR LEFT (NORTH) ONTO LOCAL ROAD(S) 54 YDS. BEAR RIGHT (EAST) ONTO US-17 [CHURCH ST] 34.8 MI. TAKE RAMP ONTO US-501 [EDWARD E BURROUGHS HWY] 2.5 MI. KEEP RIGHT ONTO RAMP 0.5 MI. TAKE RAMP ONTO SR-31 [CAROLINA BAYS PKWY] 19.5 MI. TAKE RAMP (RIGHT) ONTO SR-9 1.8 MI. TURN OFF ONTO RAMP 0.3 MI. TURN LEFT (EAST) ONTO SR-90 0.8 MI. MERGE ONTO US-17 47.5 MI. (ENTERING NORTH CAROLINA) TAKE RAMP (RIGHT) ONTO US-17 [US-74] 2.9 MI. ROAD NAME CHANGES TO US-17 BUS [US-76] 1.5 MI. KEEP STRAIGHT ONTO US-76 [DAWSON ST] 1.2 MI. BEAR RIGHT (SOUTH-EAST) ONTO US-76 [OLEANDER DR] 2.4 MI. TURN RIGHT (SOUTH) ONTO US-117 [SR-132] 0.3 MI. TURN RIGHT (WEST) ONTO LAKE AVE 120 YDS. TURN RIGHT (NORTH) ONTO LOCAL ROAD(S) 32 YDS. ARRIVE AT SITE.

APPROVAL

OWNER'S AGENT APPROVAL	SIGNATURE	PHONE NUMBER	DATE
ATC CONSTRUCTION COORDINATOR	SIGNATURE	PHONE NUMBER	DATE
ATC APPROVAL	SIGNATURE	PHONE NUMBER	DATE

SET NO.	DESCRIPTION	BY	DATE	SET NO.	DESCRIPTION	BY	DATE
1	CITY CHANGES	AGT	04-24-14	5	CITY COMMENTS	AGT	09-15-14
2	CITY COMMENTS	DS	06-24-14	6			
3	CITY CHANGES	DS	06-26-14	7			
4	REVIEW COMMENTS	DS	08-01-14	8			

CONSULTING TEAM

ARCHITECTURAL AND ENGINEERING FIRM:
BC ARCHITECTS ENGINEERS, PLC
5661 COLUMBIA PIKE, SUITE 200
FALLS CHURCH, VA 22041-2868
TEL: (703) 671-6000 CONTACT: CHRIS MORIN
FAX: (703) 671-6300

SURVEYOR:
RONALD D. PLATNER
1 WISE FERRY COURT
LEXINGTON, SC 29702
TEL: (803) 315-1238 CONTACT: RONALD D. PLATNER
FAX: –

SOIL ENGINEER:
NOT APPLICABLE

STRUCTURAL ENGINEER:
BC ARCHITECTS ENGINEERS, PLC
5661 COLUMBIA PIKE, SUITE 101
FALLS CHURCH, VA 22041-2868
TEL: (703) 671-6000 CONTACT: CHRIS MORIN
FAX: (703) 671-6300

UTILITIES:

POWER COMPANY:
COMPANY NAME: PROGRESS ENERGY
CONTACT: CUSTOMER SERVICE
TEL: (800) 452-2777
FAX: –

TELEPHONE COMPANY:
COMPANY NAME: AT&T
CONTACT: CUSTOMER SERVICE
TEL: (800) 222-0300
FAX: –

PROJECT SUMMARY

SITE NAME:
MAC RAE PARK NC

SITE NUMBER:
275164

SITE ADDRESS:
4417 LAKE AVE.
WILMINGTON, NC 28409

APPLICANT BUILDING INFO:
AMERICAN TOWER CORP.
496 LONG POINT ROAD
MOUNT PLEASANT, SC 29464
TEL: (843) 971-8385 CONTACT: JASON GROSECLOSE
FAX: (843) 971-8889 TEL: (843) 224-3778

PROPERTY OWNER:
AT&T CLEC BUILDING
1642 S COLLEGE RD
WILMINGTON, NC 28409
CONTACT: –
TEL: –

ATC – AGENT
THOMAS JOHNSON
NEXSEN PRUET PLLC
4141 PARK LAKE AVE. STE. 200
RALEIGH, NC 27612
TEL: (919) 786-2764

PROJECT DESCRIPTION:
AN UNMANNED RADIO TELECOMMUNICATIONS FACILITY CONSISTING OF A 150 FT. STEALTH UNIPOLE IN A 10'x10' LEASE AREA

ADA COMPLIANCE:
FACILITY IS UNMANNED AND NOT FOR HUMAN HABITATION

PROJECT DATA:
CAMA LAND USE CLASS: URBAN
TAX PARCEL NO: R06107-012-001-000
JURISDICTION: CITY OF WILMINGTON
LEASE AREA: 10'x10' (100 S.F.)
ZONING: O&I-1

GEOGRAPHIC COORDINATES:
LATITUDE: 34° 12' 25.054" N
LONGITUDE: 77° 53' 18.487" W
1A GROUND ELEVATION: 40.9' AMSL

CODE COMPLIANCE
2012 NCBC
2009 IBC W/ NC AMENDMENTS

SHEET INDEX

SHEET NUMBER:	DESCRIPTION:
T-1	TITLE SHEET, VICINITY MAP AND GENERAL INFORMATION
C1 TO C3	SURVEY
NP-1	SITE PLAN WITH NEIGHBORING PROPERTY INFORMATION
A-0	SITE PLAN
A-1	ENLARGED SITE PLAN
A-2	TOWER ELEVATION
A-3	FENCE, GATE AND COMPOUND CROSS SECTION
A-4	SHELTER LAYOUT & ELEVATIONS
A-5	SHELTER DETAILS
A-6	ICEBRIDGE DETAILS
A-7	ANTENNA DETAILS
A-8	WOOD FENCE DETAILS
G-1	EROSION & SEDIMENT CONTROL PLAN
G-2	SILT FENCE DETAILS & NOTES
L-1	TREE REMOVAL & LANDSCAPE PLAN
L-2	LANDSCAPING NOTES & PROTECTION DETAILS
E-1	UTILITY & GROUNDING PLAN
E-2	ENLARGED GROUNDING PLAN
E-3	AT&T ELECTRICAL DETAILS
E-4	AT&T PANELBOARD SCHEDULE
E-5	AT&T ELECTRICAL DETAILS
E-6	AT&T ELECTRICAL DETAILS
E-7	AT&T ELECTRICAL DETAILS
E-8	AT&T ELECTRICAL DETAILS
E-9	ELECTRICAL DETAILS
E-10	ELECTRICAL DETAILS
E-11	ELECTRICAL NOTES
GEN-1	50KW GENERATOR DETAILS
GEN-2	50KW GENERATOR DETAILS
GEN-3	50KW GENERATOR DETAILS
GEN-4	50KW GENERATOR DETAILS
SP-1	SPECIFICATIONS
SP-2	SPECIFICATIONS

AMERICAN TOWER® CORPORATION
496 LONG POINT ROAD
MOUNT PLEASANT, SC 29464
TEL.: (843) 971-8385
FAX: (843) 971-8889

THESE DRAWINGS AND/OR THE ACCOMPANYING SPECIFICATION AS INSTRUMENTS OF SERVICE, ARE THE EXCLUSIVE PROPERTY OF AMERICAN TOWER CORPORATION AND THEIR USE AND PUBLICATION SHALL BE RESTRICTED TO THE ORIGINAL SITE FOR WHICH THEY ARE PREPARED. REUSE, REPRODUCTION OR PUBLICATION BY ANY METHOD, IN WHOLE OR IN PART, IS PROHIBITED EXCEPT BY WRITTEN PERMISSION FROM AMERICAN TOWER CORPORATION TITLE TO THESE PLANS AND/OR SPECIFICATIONS SHALL REMAIN WITH AMERICAN TOWER CORPORATION WITHOUT PREJUDICE AND VISUAL CONTACT WITH THEM SHALL CONSTITUTE PRIMA FACIE EVIDENCE OF ACCEPTANCE OF THESE RESTRICTIONS.

BC architects engineers
5661 COLUMBIA PIKE, SUITE 200
FALLS CHURCH, VA 22041-2868
TEL: (703) 671-6000
FAX: (703) 671-6300

SHEET REVISION

NO.	DESCRIPTION	BY	DATE
1	NEW SHEETS	AGT	04-24-14
2	CITY COMMENTS	DS	06-24-14
3	NEW SHEET	DS	06-26-14
4			
5			
6			

ATC SITE NUMBER: 275164

ATC SITE NAME: MAC RAE PARK NC

SITE ADDRESS: 4417 LAKE AVE. WILMINGTON, NC 28409

STAMP HERE: NORTH CAROLINA PROFESSIONAL SEAL 0024902 ENGINEER CHRISTOPHER D. MORIN 9.15.14

DRAWN BY:	AGT
CHECKED BY:	DRS
DATE DRAWN:	03-24-14
SUBMISSION:	FINAL CD'S

SHEET TITLE:

TITLE SHEET, VICINITY MAP AND GENERAL INFORMATION

SHEET NUMBER:	REV. #
T-1	3

09-15-14 ARNOLD 09:38:54 Y:/Drawings - 2013/ATC/Mac Rae Park NC - 275164/_CD's Rev 5 2014-09-09/T1.dwg

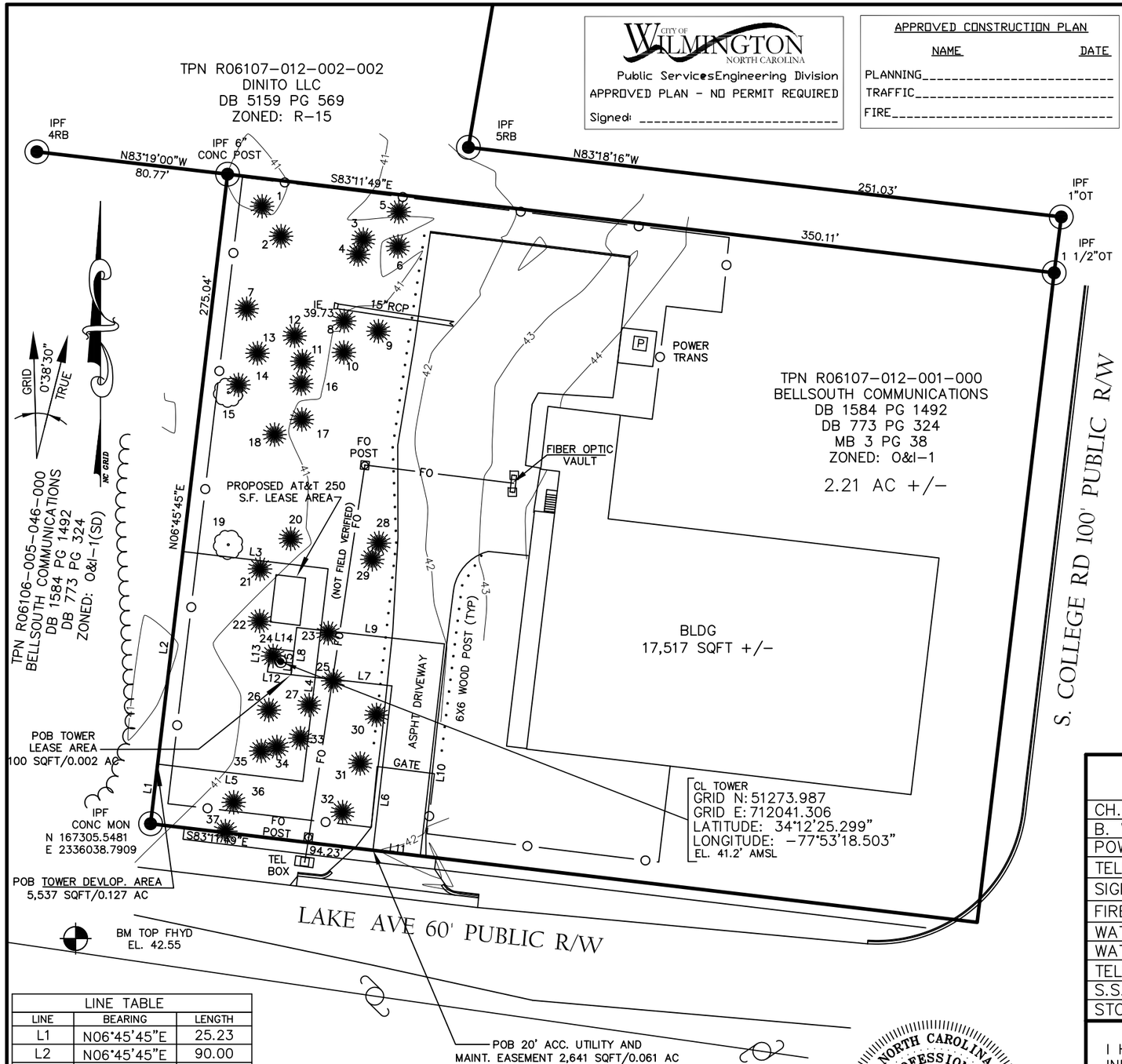

CITY OF WILMINGTON NORTH CAROLINA
Public Services Engineering Division
APPROVED PLAN - NO PERMIT REQUIRED
Signed: _____

APPROVED CONSTRUCTION PLAN

NAME	DATE
PLANNING_____	
TRAFFIC_____	
FIRE_____	

SYMBOL	DESCRIPTION
	PALMETTO
	PINE
	LIVE OAK
	TWIN OAK
	MULTI-TRUNK OAK

1. 20" PINE
2. 18" PINE
3. 15" PINE
4. 14" PINE
5. 14" PINE
6. 12" PINE
7. 14" PINE
8. 12" PINE
9. 16" PINE
10. 20" PINE
11. 20" PINE
12. 12" PINE
13. 20" PINE
14. 15" PINE
15. 14" LIVE OAK
16. 10" PINE
17. 18" PINE
18. 12" PINE
19. 34" OAK
20. 22" PINE
21. 20" PINE
22. 22" PINE
23. 20" PINE
24. 24" PINE
25. 20" PINE
26. 18" PINE
27. 15" PINE
28. 16" PINE
29. 20" PINE
30. 18" PINE
31. 19" PINE
32. 24'" PINE
33. 16" PINE
34. 23" PINE
35. 18" PINE
36. 20" PINE
37. 21" PINE

SET BACKS:
FRONT: 25'
REAR: 20'
SIDE: 10'

REVISIONS

NO.	DATE	DESCRIPTION	BY
1	11/13/13	MOVE LEASE AREA/ADD TREES	BB
2	12/16/13	REVISE PER COMMENTS	BB
3	2/14/14	ADDED TITLE	RDP
4	09/12/14	MOVE SITE	RDP

NOTES:
1) THIS EXHIBIT REPRESENTS THE LEASE SITE AND ACCESS, UTILITY AND MAINTENANCE EASEMENTS ONLY AND IS NOT INTENDED FOR ANY OTHER USE.
2) ALL BEARINGS ARE NORTH CAROLINA STATE GRID, ALL COORDINATES ARE NAD 83 AND ALL ELEVATIONS ARE NAVD 88.
3) TAX MAP PARCEL NO. R06107-012-001-000
4) RATIO OF PRECISION = 1/10,000.
5) AREA BY COORDINATE METHOD.
6) THE LOCATIONS OF ANY UNDERGROUND UTILITIES IF SHOWN ARE BASED ON PAINTED MARKINGS OBSERVED IN THE FIELD AND/OR ARE APPROXIMATE.
7) THIS SURVEY WAS PREPARED WITH THE BENEFIT OF A TITLE REPORT WHICH MAY REVEAL ADDITIONAL CONVEYANCES, EASEMENTS OR RIGHTS-OF-WAY NOT SHOWN HEREIN.

REFERENCE:
1.REF PLAT MB 3 PG 38

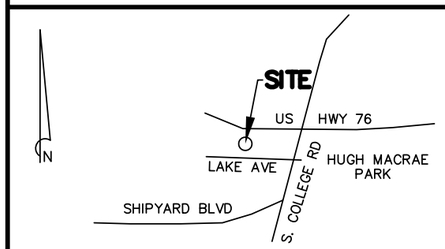

SITE MAP
N.T.S.

NOTE:
THIS SURVEY DOES NOT REPRESENT A BOUNDARY SURVEY BY RONALD D. PLATNER PROPERTY LINES WERE TAKEN FROM EXISTING FIELD EVIDENCE. EXISTING DEEDS AND PLATS OF PUBLIC RECORD FROM SURVEYS AND DOCUMENTS PROVIDED TO THE SURVEYOR BY THE OWNER OR CLIENT.

I HEREBY CERTIFY THAT I HAVE CONSULTED THE FEDERAL EMERGENCY MANAGEMENT AGENCY, FLOOD INSURANCE RATE MAP NO. 3720313600J DATED 4/03/06: AND TO THE BEST OF MY KNOWLEDGE AND BELIEF THE SUBJECT PROPERTY IS LOCATED IN "ZONE X" WHICH IS NOT LOCATED IN A SPECIAL FLOOD HAZARD ZONE A OR V.

LEGEND

CH. LNK. FENCE	—o—	GROUND ROD	+
B. WIRE FENCE	—x—	PROP. CORNER	◉
POWER LINE	—P—	POWER POLE	
TELE. LINE	—T—	PP W/ G. WIRE	
SIGN	—o—	LIGHT POLE	
FIRE HYDRANT		BM OR GPS PT	
WATER VALVE	Ⓥ	ELEC. RACK	
WATER METER		ICE BRIDGE	
TELE. BOX	⊡	CONC. PAD	C
S.S. MH	Ⓢ	EQUIP. PAD	E
STORM MH	Ⓓ	POWER BOX	P

LEASE SITE AND ACCESS, UTILITY, & MAINTENANCE EASEMENT EXHIBIT
PREPARED FOR

AMERICAN TOWER

SITE INFORMATION:
MAC RAE PARK NC
TOWER SITE
SITE ID#: 275164
4417 LAKE AVE.
WILMINGTON, NEW HANOVER COUNTY, NC

RONALD D. PLATNER, PLS
1 WISE FERRY COURT
LEXINGTON, S. C. 29702
TELE. (803) 315-1238

LINE TABLE

LINE	BEARING	LENGTH
L1	N06°45'45"E	25.23
L2	N06°45'45"E	90.00
L3	S83°11'49"E	61.50
L4	S06°45'45"W	90.00
L5	N83°11'49"W	61.50
L6	N06°20'06"E	69.55
L7	N83°39'54"W	42.65
L8	N06°45'45"E	20.00
L9	S83°39'54"E	62.50
L10	S06°20'06"W	89.71
L11	N83°11'49"W	20.00

LINE TABLE

L12	N83°15'37"W	10.00
L13	N06°45'45"E	10.00
L14	S83°15'37"E	10.00
L15	S06°45'45"W	10.00

NORTH CAROLINA PROFESSIONAL SEAL L-3852 LAND SURVEYOR RONALD D. PLATNER

I HEREBY STATE THAT TO THE BEST OF MY KNOWLEDGE, INFORMATION, AND BELIEF, THE CALCULATED BOUNDARY LINES OF THE LEASE SITE AND EASEMENT SHOWN HEREIN ARE EQUIVALENT TO THE CLASS "B" ACCURACY REQUIREMENTS AS SPECIFIED IN THE "MINIMUM STANDARDS MANUAL FOR THE PRACTICE OF LAND SURVEYING IN NORTH CAROLINA."

RONALD D. PLATNER, P.L.S. NO. L-3852

SCALE: 1" = 50'
0' 25' 50' 100'

DRAWING NAME	DATE	SHEET NO.
RIVER RD.DWG	SEPT. 17, 2013	C1
PROJECT NO. RIVER RD	FIELD BOOK NO. (SEE FILE)	

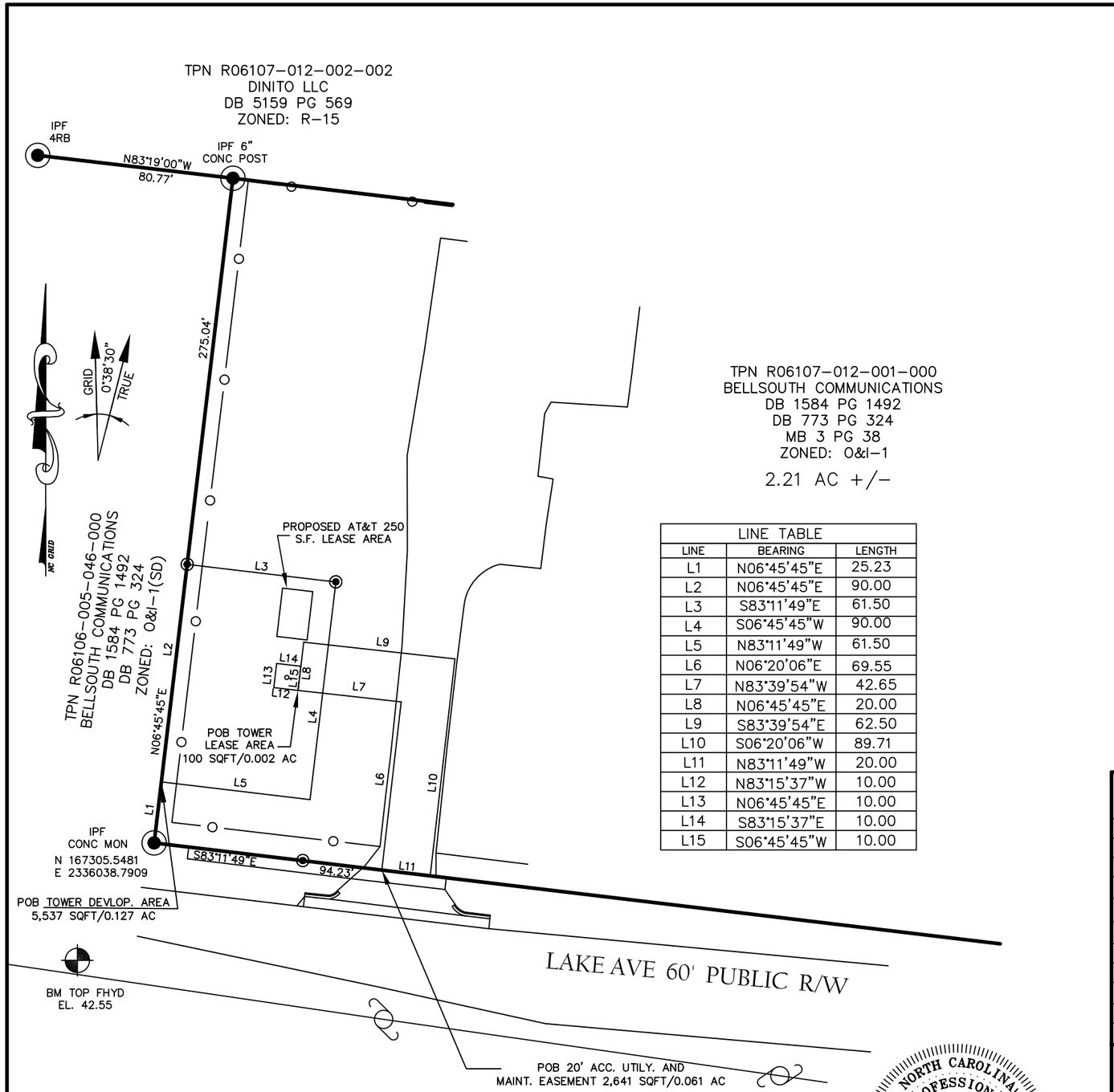

TPN R06107-012-001-000
BELLSOUTH COMMUNICATIONS
DB 1584 PG 1492
DB 773 PG 324
MB 3 PG 38
ZONED: O&I-1

2.21 AC +/-

LINE TABLE		
LINE	BEARING	LENGTH
L1	N06°45'45"E	25.23
L2	N06°45'45"E	90.00
L3	S83°11'49"E	61.50
L4	S06°45'45"W	90.00
L5	N83°11'49"W	61.50
L6	N06°20'06"E	69.55
L7	N83°39'54"W	42.65
L8	N06°45'45"E	20.00
L9	S83°39'54"E	62.50
L10	S06°20'06"W	89.71
L11	N83°11'49"W	20.00
L12	N83°15'37"W	10.00
L13	N06°45'45"E	10.00
L14	S83°15'37"E	10.00
L15	S06°45'45"W	10.00

CITY OF WILMINGTON NORTH CAROLINA
Public Services Engineering Division
APPROVED PLAN - NO PERMIT REQUIRED
Signed: _____

APPROVED CONSTRUCTION PLAN

NAME	DATE
PLANNING	
TRAFFIC	
FIRE	

REFERENCE:
1.REF PLAT MB 3 PG 38

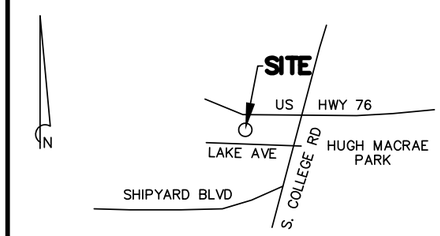

SITE MAP
N.T.S.

LEGEND

CH. LNK. FENCE	—o—	GROUND ROD	+
B. WIRE FENCE	—x—	PROP. CORNER	◉
POWER LINE	—P—	POWER POLE	
TELE. LINE	—T—	PP W/ G. WIRE	
SIGN	—o—	LIGHT POLE	
FIRE HYDRANT		BM OR GPS PT	
WATER VALVE	Ⓥ	ELEC. RACK	
WATER METER		ICE BRIDGE	
TELE. BOX	⊡	CONC. PAD	C
S.S. MH	Ⓢ	EQUIP. PAD	E
STORM MH	Ⓓ	POWER BOX	P

I HEREBY STATE THAT TO THE BEST OF MY KNOWLEDGE, INFORMATION, AND BELIEF, THE CALCULATED BOUNDARY LINES OF THE LEASE SITE AND EASEMENT SHOWN HEREIN ARE EQUIVALENT TO THE CLASS "B" ACCURACY REQUIREMENTS AS SPECIFIED IN THE "MINIMUM STANDARDS MANUAL FOR THE PRACTICE OF LAND SURVEYING IN NORTH CAROLINA."

RONALD D. PLATNER, P.L.S. NO. L-3852

NORTH CAROLINA PROFESSIONAL SEAL L-3852 LAND SURVEYOR RONALD D. PLATNER

REVISIONS

NO.	DATE	DESCRIPTION	BY
1	11/13/13	MOVE LEASE AREA/ADD TREES	BB
2	12/16/13	REVISE PER COMMENTS	BB
3	2/14/14	ADDED TITLE	RDP
4	09/12/14	MOVE SITE	RDP

NOTES:
1) THIS EXHIBIT REPRESENTS THE LEASE SITE AND ACCESS, UTILITY AND MAINTENANCE EASEMENTS ONLY AND IS NOT INTENDED FOR ANY OTHER USE.
2) ALL BEARINGS ARE NORTH CAROLINA STATE GRID, ALL COORDINATES ARE NAD 83 AND ALL ELEVATIONS ARE NAVD 88.
3) TAX MAP PARCEL NO. R06107-012-001-000
4) RATIO OF PRECISION = 1/10,000.
5) AREA BY COORDINATE METHOD.
6) THE LOCATIONS OF ANY UNDERGROUND UTILITIES IF SHOWN ARE BASED ON PAINTED MARKINGS OBSERVED IN THE FIELD AND/OR ARE APPROXIMATE.
7) THIS SURVEY WAS PREPARED WITH THE BENEFIT OF A TITLE REPORT WHICH MAY REVEAL ADDITIONAL CONVEYANCES, EASEMENTS OR RIGHTS-OF-WAY NOT SHOWN HEREIN.

NOTE:
THIS SURVEY DOES NOT REPRESENT A BOUNDARY SURVEY BY RONALD D. PLATNER PROPERTY LINES WERE TAKEN FROM EXISTING FIELD EVIDENCE. EXISTING DEEDS AND PLATS OF PUBLIC RECORD FROM SURVEYS AND DOCUMENTS PROVIDED TO THE SURVEYOR BY THE OWNER OR CLIENT.

I HEREBY CERTIFY THAT I HAVE CONSULTED THE FEDERAL EMERGENCY MANAGEMENT AGENCY, FLOOD INSURANCE RATE MAP NO. 3720313600J DATED 4/03/06: AND TO THE BEST OF MY KNOWLEDGE AND BELIEF THE SUBJECT PROPERTY IS LOCATED IN "ZONE X" WHICH IS NOT LOCATED IN A SPECIAL FLOOD HAZARD ZONE A OR V.

LEASE SITE AND ACCESS, UTILITY, & MAINTENANCE EASEMENT EXHIBIT
PREPARED FOR

AMERICAN TOWER

SITE INFORMATION:
MAC RAE PARK NC
TOWER SITE
SITE ID#: 275164
4417 LAKE AVE.
WILMINGTON, NEW HANOVER COUNTY, NC

RONALD D. PLATNER, PLS
1 WISE FERRY COURT
LEXINGTON, S. C. 29702
TELE. (803) 315-1238

SCALE: 1" = 50' 0' 25' 50' 100'

DRAWING NAME	DATE	SHEET NO.
RIVER RD.DWG	SEPT. 17, 2013	C2
PROJECT NO. RIVER RD	FIELD BOOK NO. (SEE FILE)	

20' ACCESS, UTILITY, AND MAINTENANCE EASEMENT

BEGINNING AT A CONCRETE MONUMENT AT THE SOUTHWESTERN MOST CORNER OF TAX PARCEL NUMBER R06107-012-001-000 AND THE RIGHT OF WAY OF LAKE AVENUE WITH STATE PLANE COORDINATES N167305.5481 E2336038.7909, THENCE S83°11'49"E FOR A DISTANCE OF 94.23 ALONG THE RIGHT OF WAY OF LAKE AVENUE TO A POINT, SAID POINT BEING THE POINT OF BEGINNING FOR THE ACCESS, UTILITY, AND MAINTENANCE EASEMENT, THENCE N06°20'06"E FOR A DISTANCE OF 69.55 TO A POINT, THENCE N83°39'54"W FOR A DISTANCE OF 42.65 TO A POINT, THENCE N06°45'45"E FOR A DISTANCE OF 20.00 TO A POINT, THENCE S83°39'54"E FOR A DISTANCE OF 62.50 TO A POINT, THENCE S06°20'06"W FOR A DISTANCE OF 89.71' TO A POINT, THENCE N83°11'49"W FOR A DISTANCE OF 20.00 TO A POINT, SAID POINT BEING THE POINT OF BEGINNING FOR THE ACCESS, UTILITY, AND MAINTENANCE EASEMENT CONTAINING 2,641 SQFT/0.061 AC.

TOWER DEVELOPMENT AREA

BEGINNING AT A CONCRETE MONUMENT AT THE SOUTHWESTERN MOST CORNER OF TAX PARCEL NUMBER R06107-012-001-000 AND THE RIGHT OF WAY OF LAKE AVENUE WITH STATE PLANE COORDINATES N167305.5481 E2336038.7909, THENCE N06°45'45"E FOR A DISTANCE OF 25.23' TO A POINT. SAID POINT BEING THE POINT OF BEGINNING FOR THE TOWER DEVELOPMENT AREA, THENCE N06°45'45"E FOR A DISTANCE OF 90.00 TO A POINT, THENCE S83°11'49"E FOR A DISTANCE OF 61.50 TO A POINT, THENCE S06°45'45"W FOR A DISTANCE OF 90.00 TO A POINT, THENCE N83°11'49"W FOR A DISTANCE OF 61.50 TO A POINT, SAID POINT BEING THE POINT OF BEGINNING FOR THE TOWER DEVELOPMENT AREA CONTAINING 5,537 SQFT/0.127 AC.

TOWER LEASE AREA

BEGINNING AT A CONCRETE MONUMENT AT THE SOUTHWESTERN MOST CORNER OF TAX PARCEL NUMBER R06107-012-001-000 AND THE RIGHT OF WAY OF LAKE AVENUE WITH STATE PLANE COORDINATES N167305.5481 E2336038.7909, THENCE S83°11'49"E FOR A DISTANCE OF 94.23 ALONG THE RIGHT OF WAY OF LAKE AVENUE TO A POINT, THENCE N06°20'06"E FOR A DISTANCE OF 69.55 TO A POINT, THENCE N83°39'54"W FOR A DISTANCE OF 42.65 TO A POINT, SAID POINT BEING THE POINT OF BEGINNING FOR THE TOWER LEASE AREA, THENCE N83°15'37"W FOR A DISTANCE OF 10.00 TO A POINT, THENCE N06°45'45"E FOR A DISTANCE OF 10.00 TO A POINT, THENCE S83°15'37"E FOR A DISTANCE OF 10.00 TO A POINT, THENCE S06°45'45"W FOR A DISTANCE OF 10.00 TO A POINT, SAID POINT BEING THE POINT OF BEGINNING FOR THE TOWER LEASE AREA CONTAINING 100 SQFT/0.002 AC.

SCHEDULE A
Commitment 01-14004827-01T
1. Commitment Effective Date: 01/15/2014 at 7:00 AM

EXHIBIT "A"
SITUATED IN THE COUNTY OF NEW HANOVER AND STATE OF NORTH CAROLINA AND DESCRIBED AS FOLLOWS:
PARENT PARCEL:
BEGINNING AT A POINT IN THE WESTERN RIGHT OF WAY LINE OF N.C. HIGHWAY #132 WHERE SAID WESTERN RIGHT OF WAY LINE IS INTERSECTED BY AN EXTENSION OF THE NORTHERLY LINE OF LAKE AVENUE AS SAID LAKE AVENUE IS SHOWN ON A MAP OF WINTER PARK GARDENS RECORDED IN MAP BOOK 3, PAGE 38, OF THE NEW HANOVER COUNTY REGISTRY; RUNNING THENCE IN A WESTERLY DIRECTION AND WITH AND ALONG SAID EXTENDED LINE OF LAKE AVENUE 350 FEET TO A POINT; THENCE IN A NORTHERLY DIRECTION AND PARALLEL WITH THE WESTERLY RIGHT OF WAY OF N.C. HIGHWAY 132, 275 FEET TO A POINT; THENCE EASTWARDLY AND PARALLEL WITH EXTENDED NORTHERLY LINE OF LAKE AVENGE 350 FEET TO A POINT IN THE WESTERN RIGHT OF WAY LINE OF N.C. HIGHWAY 132; THENCE SOUTHWARDLY WITH AND ALONG SAID WESTERN RIGHT AWAY LINE OF N.C. HIGHWAY 132, 275 FEET TO THE POINT OF BEGINNING.
TAX I.D. NUMBER: R06107-012-001-000
END OF SCHEDULE A

SCHEDULE B - SECTION II
EXCEPTIONS
ANY POLICY WE ISSUE WILL HAVE THE FOLLOWING EXCEPTIONS UNLESS THEY ARE TAKEN CARE OF TO OUR SATISFACTION.
(1) FACTS WHICH WOULD BE DISCLOSED BY A COMPREHENSIVE SURVEY OF THE PREMISES HEREIN DESCRIBED. AS SHOWN ON SURVEY
(2) RIGHTS OR CLAIMS OF PARTIES IN POSSESSION OR RIGHTS OF TENANTS IN POSSESSION AS TENANTS ONLY UNDER UNRECORDED LEASES. AS SHOWN ON SURVEY
(3) MECHANICS', CONTRACTORS' OR MATERIAL MEN'S LIENS AND LIEN CLAIMS, IF ANY, WHERE NO NOTICE THEREOF APPEARS OF RECORD. NOT A SURVEY ISSUE
(4) ANY CHANGES IN TITLE OCCURRING SUBSEQUENT TO THE EFFECTIVE DATE OF THIS COMMITMENT AND PRIOR TO THE DATE OF ISSUANCE OF THE TITLE POLICY. NOT A SURVEY ISSUE
(5) TAXES AND SPECIAL ASSESSMENTS FOR CURRENT TAX YEAR DUE AND ALL SUBSEQUENT YEARS. NOT A SURVEY ISSUE
(6) SUBJECT TO COVENANTS, RESTRICTIONS, RESERVATIONS, EASEMENTS, AND RIGHTS OF WAY AND BUILDING SETBACKS AS SHOWN ON THE PLAT RECORDED IN BOOK 3, PAGE 38 OF NE W HANOVER COUNTY RECORDS. AS SHOWN ON SURVEY
END OF SCHEDULE B-II

CITY OF WILMINGTON NORTH CAROLINA
Public ServicesEngineering Division
APPROVED PLAN - NO PERMIT REQUIRED
Signed: _____

APPROVED CONSTRUCTION PLAN

NAME	DATE
PLANNING	
TRAFFIC	
FIRE	

NORTH CAROLINA PROFESSIONAL SEAL L-3852 LAND SURVEYOR RONALD D. PLATNER

REFERENCE:
1.REF PLAT MB 3 PG 38

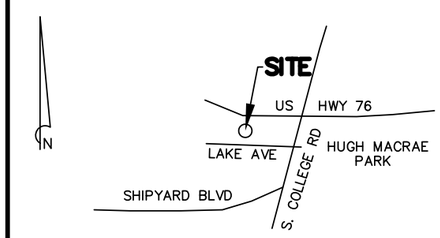

SITE MAP
N.T.S.

LEGEND

CH. LNK. FENCE	—o—	GROUND ROD	+
B. WIRE FENCE	—x—	PROP. CORNER	◉
POWER LINE	—P—	POWER POLE	
TELE. LINE	—T—	PP W/ G. WIRE	
SIGN	—o—	LIGHT POLE	
FIRE HYDRANT		BM OR GPS PT	
WATER VALVE	Ⓥ	ELEC. RACK	
WATER METER	⬭	ICE BRIDGE	
TELE. BOX	⊡	CONC. PAD	C
S.S. MH	Ⓢ	EQUIP. PAD	E
STORM MH	Ⓓ	POWER BOX	P

I HEREBY STATE THAT TO THE BEST OF MY KNOWLEDGE, INFORMATION, AND BELIEF, THE CALCULATED BOUNDARY LINES OF THE LEASE SITE AND EASEMENT SHOWN HEREIN ARE EQUIVALENT TO THE CLASS "B" ACCURACY REQUIREMENTS AS SPECIFIED IN THE "MINIMUM STANDARDS MANUAL FOR THE PRACTICE OF LAND SURVEYING IN NORTH CAROLINA."

RONALD D. PLATNER, P.L.S. NO. L-3852

REVISIONS

NO.	DATE	DESCRIPTION	BY
1	11/13/13	MOVE LEASE AREA/ADD TREES	BB
2	12/16/13	REVISE PER COMMENTS	BB
3	2/14/14	ADDED TITLE	RDP
4	09/12/14	MOVE SITE	RDP

NOTES:
1) THIS EXHIBIT REPRESENTS THE LEASE SITE AND ACCESS, UTILITY AND MAINTENANCE EASEMENTS ONLY AND IS NOT INTENDED FOR ANY OTHER USE.
2) ALL BEARINGS ARE NORTH CAROLINA STATE GRID, ALL COORDINATES ARE NAD 83 AND ALL ELEVATIONS ARE NAVD 88.
3) TAX MAP PARCEL NO. R06107-012-001-000
4) RATIO OF PRECISION = 1/10,000.
5) AREA BY COORDINATE METHOD.
6) THE LOCATIONS OF ANY UNDERGROUND UTILITIES IF SHOWN ARE BASED ON PAINTED MARKINGS OBSERVED IN THE FIELD AND/OR ARE APPROXIMATE.
7) THIS SURVEY WAS PREPARED WITH THE BENEFIT OF A TITLE REPORT WHICH MAY REVEAL ADDITIONAL CONVEYANCES, EASEMENTS OR RIGHTS-OF-WAY NOT SHOWN HEREIN.

NOTE:
THIS SURVEY DOES NOT REPRESENT A BOUNDARY SURVEY BY RONALD D. PLATNER PROPERTY LINES WERE TAKEN FROM EXISTING FIELD EVIDENCE. EXISTING DEEDS AND PLATS OF PUBLIC RECORD FROM SURVEYS AND DOCUMENTS PROVIDED TO THE SURVEYOR BY THE OWNER OR CLIENT.

I HEREBY CERTIFY THAT I HAVE CONSULTED THE FEDERAL EMERGENCY MANAGEMENT AGENCY, FLOOD INSURANCE RATE MAP NO. 3720313600J DATED 4/03/06: AND TO THE BEST OF MY KNOWLEDGE AND BELIEF THE SUBJECT PROPERTY IS LOCATED IN "ZONE X" WHICH IS NOT LOCATED IN A SPECIAL FLOOD HAZARD ZONE A OR V.

LEASE SITE AND ACCESS, UTILITY, & MAINTENANCE EASEMENT EXHIBIT
PREPARED FOR

AMERICAN TOWER

SITE INFORMATION:
MACRAE PARK NC
TOWER SITE
SITE ID#: 275164
4417 LAKE AVE.
WILMINGTON, NEW HANOVER COUNTY, NC

RONALD D. PLATNER, PLS
1 WISE FERRY COURT
LEXINGTON, S. C. 29702
TELE. (803) 315-1238

SCALE: 1" = 50' 0' 25' 50' 100'

DRAWING NAME	DATE	SHEET NO.
RIVER RD.DWG	SEPT. 17, 2013	C3
PROJECT NO. RIVER RD	FIELD BOOK NO. (SEE FILE)	

LEGEND

- X X — CHAIN LINK FENCE
- PROPERTY LINE
- LEASE AREA
- OHT/OHP — OVERHEAD TELEPHONE/OVERHEAD POWER
- UNDERGROUND UTILITY LINES
- LIMITS OF DISTURBANCE
- SILT FENCE

CITY OF WILMINGTON NORTH CAROLINA
Public Services Engineering Division
APPROVED PLAN - NO PERMIT REQUIRED
Signed: _____

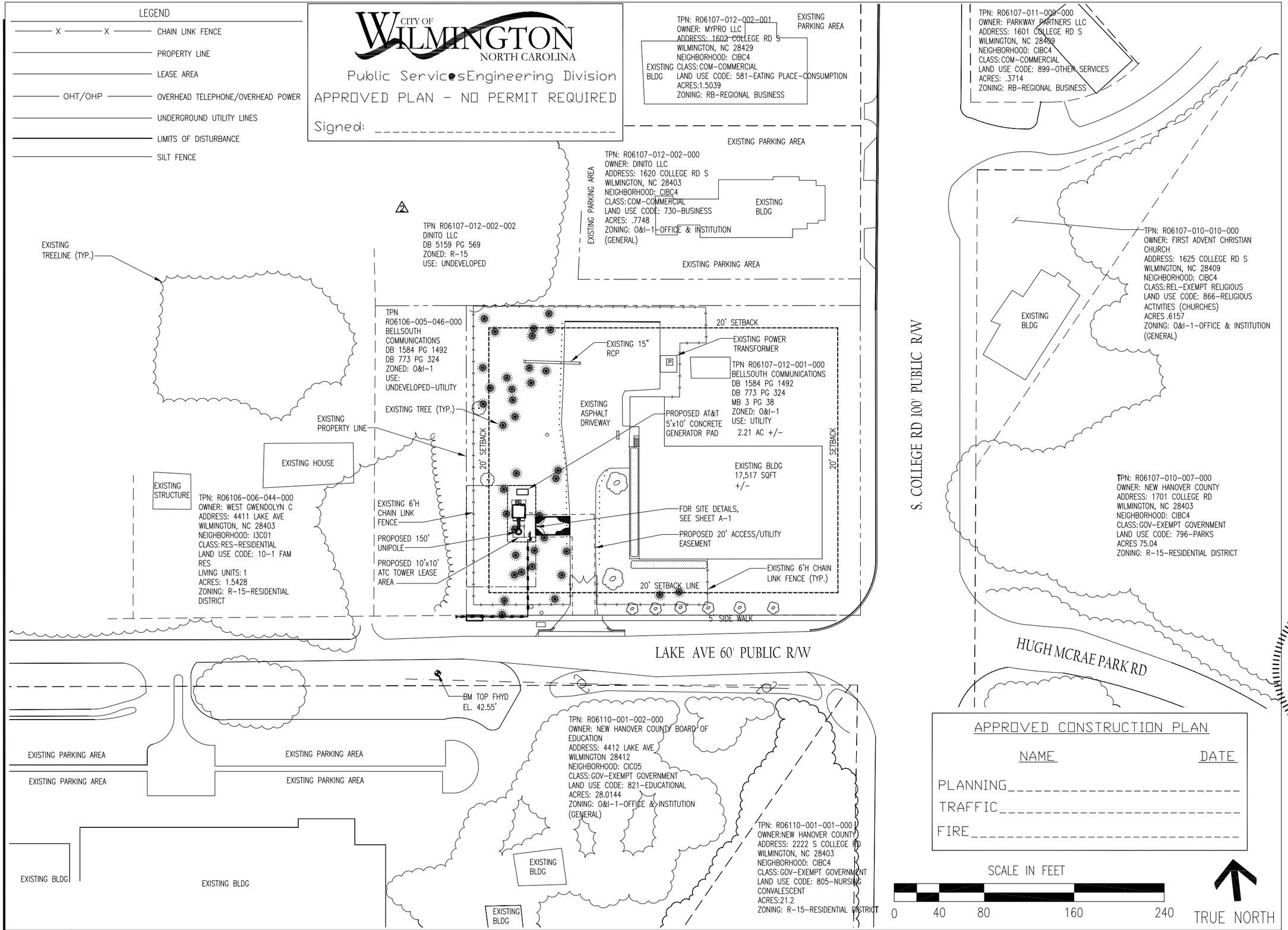

APPROVED CONSTRUCTION PLAN

NAME	DATE
PLANNING	
TRAFFIC	
FIRE	

11"x17" - 1"=80'
24"x36" - 1"=40'

SITE PLAN

1

AMERICAN TOWER CORPORATION
496 LONG POINT ROAD
MOUNT PLEASANT, SC 29464
TEL.: (843) 971-8385
FAX: (843) 971-8889

THESE DRAWINGS AND/OR THE ACCOMPANYING SPECIFICATION AS INSTRUMENTS OF SERVICE, ARE THE EXCLUSIVE PROPERTY OF AMERICAN TOWER CORPORATION AND THEIR USE AND PUBLICATION SHALL BE RESTRICTED TO THE ORIGINAL SITE FOR WHICH THEY ARE PREPARED. REUSE, REPRODUCTION OR PUBLICATION BY ANY METHOD, IN WHOLE OR IN PART, IS PROHIBITED EXCEPT BY WRITTEN PERMISSION FROM AMERICAN TOWER CORPORATION TITLE TO THESE PLANS AND/OR SPECIFICATIONS SHALL REMAIN WITH AMERICAN TOWER CORPORATION WITHOUT PREJUDICE AND VISUAL CONTACT WITH THEM SHALL CONSTITUTE PRIMA FACIE EVIDENCE OF ACCEPTANCE OF THESE RESTRICTIONS.

BC architects engineers
5661 COLUMBIA PIKE, SUITE 200
FALLS CHURCH, VA 22041-2868
TEL: (703) 671-6000
FAX: (703) 671-6300

SHEET REVISION

NO.	DESCRIPTION	BY	DATE
1	NEW SHEET	AGT	06-26-14
2	CHG. ZONING	DS	08-01-14
3	CITY COMMENTS	AGT	09-15-14
4			
5			
6			

ATC SITE NUMBER:
275164
ATC SITE NAME:
MAC RAE PARK NC
SITE ADDRESS:
4417 LAKE AVE.
WILMINGTON, NC 28409

STAMP HERE:
NORTH CAROLINA PROFESSIONAL SEAL 0024902 ENGINEER CHRISTOPHER D. MORIN
9.15.14

DRAWN BY:	AGT
CHECKED BY:	DRS
DATE DRAWN:	03-24-14
SUBMISSION:	FINAL CD'S

SHEET TITLE:
SITE PLAN WITH NEIGHBORING PROP. INFORMATION

SHEET NUMBER: NP-1 (1, 3)
REV. # 3

09-15-14 ARNOLD 09:32:35 Y:/Drawings - 2013/ATC/Mac Rae Park NC - 275164/_CD's Rev 5 2014-09-09/NP1.dwg

LEGEND

- X X — CHAIN LINK FENCE
- PROPERTY LINE
- LEASE AREA
- OHT/OHP — OVERHEAD TELEPHONE/OVERHEAD POWER
- UNDERGROUND UTILITY LINES
- LIMITS OF DISTURBANCE
- SILT FENCE

CITY OF WILMINGTON NORTH CAROLINA
Public Services Engineering Division
APPROVED PLAN - NO PERMIT REQUIRED
Signed: _____

NOTES:

1. IF POWER & FIBER CONDUIT ARE PLACED IN THE SAME TRENCH, PER NEC CODE, A MINIMUM OF 12" SEPARATION IS REQUIRED BETWEEN THE POWER & FIBER CONDUIT.
2. SWEEPING 90'S TO BE INSTALLED AT ALL TURNS & BENDS (NO HARD 90'S).
3. INSTALL PULL BOX EVERY 500' OR EACH 3RD. 90 DEG. TURN.
4. CONDUIT TO BE PLACED IN THE UTILITY EASEMENT AND/OR ATC LEASE AREA.
5. TOWER WILL HAVE A WHITE FINISH.
6. TOWER LIGHTING IS NOT PROPOSED.

1. EXISTING IMPERVIOUS (1)
PAVEMENT AREA = 12,400 S.F.
EXISTING BUILDING = 17,517 S.F. (3)
TRANSFORMER PAD = 217 S.F.
TOTAL = 30,134 S.F./0.69 AC (4)

EXISTING PROPERTY = 96,267 SF/2.21 AC

2. EXISTING PERCENT IMPERVIOUS AREA = 31%

4. PROPOSED ATC IMPERVIOUS
GEN. PAD AREA = 50 S.F./ 0.001 AC
EQ. SHELTER = 154 S.F./ 0.003 AC
TOWER FOUNDATION =113 S.F./0.002 AC
TOTAL IMPERVIOUS =317 S.F./0.007 AC

5. INCREASE IN IMPERVIOUS
NEW TOTAL =30,451 S.F./0.699 AC
PERCENT INCREASE = 0.6%

1. STREETYARD LANDSCAPING IS NOT REQUIRED ALONG COLLEGE RD. FOR THIS PROPOSED COONSTRUCTION.

2. SECONDARY STREETYARD REQUIREMENTS ALONG LAKE AVE.:

340' X 4.5=1530 S.F. (4)
1530/600=2.5

REQUIRES 3 CANOPY TREES
18 SHRUBS

3. EXISTING LANDSCAPING ALONG LAKE AVE. MEETS THIS REQUIREMENT.

7. BUILDING SETBACK REQUIREMENTS:

REQUIRED SETBACKS

FRONT = 25'
REAR = 20'
SIDE = 10"

PROPOSED FENCE SETBACKS

FRONT = 39'-10"
REAR = 184'-11"
SIDE = 36'-4"

DEVELOPMENT NOTES:

1. CAMA LAND USE CLASSIFICATION: URBAN
2. THE PROPOSED SITE IS NOT LOCATED IN A CAMA "SMALL AREA PLANS" GEOGRAPHIC AREA.
3. TOWER DEVELOPMENT AREA HAS (1) PINE TREE TO BE REMOVED WITH A DBH Of 24"
4. OFF-STREET PARKING IS NOT REQUIRED FOR PROPOSED SITE. EXISTING PARKING HAS NOT BEEN REDUCED.
5. CONSTRUCTION AND GRADING FOR PROPOSED SITE WILL NOT DISTURB ANY WETLAND RESOURCES OR CONSERVATION SETBACKS.
6. THERE ARE NO IDENTIFIED WETLANDS OR CONSERVATION RESOURCE ON PARCEL OR ADJACENT TO PROPOSED SITE.
7. FOR TREE REMOVAL PLAN, SEE SHEET L-1.
8. NO STREETYARD LANDSCAPING IS REQUIRED. EXISTING LANDSCAPING MEETS THE REQUIREMENT. (5)
9. A UTILITY CUT PERMIT IS REQUIRED FOR EACH OPEN CUT OF A CITY STREET. GC SHALL CONTACT (919) 341-5888 FOR MORE DETAILS AND APPLICATION.
10. ANY BROKEN OR MISSING SIDEWALK PANELS, DRIVEWAY PANELS AND CURBING SHALL BE REPLACED.
11. CONTACT TRAFFIC ENGINEERING AT (919) 341-7888 48 HOURS PRIOR TO ANY EXCAVATIONIN THE R/W.

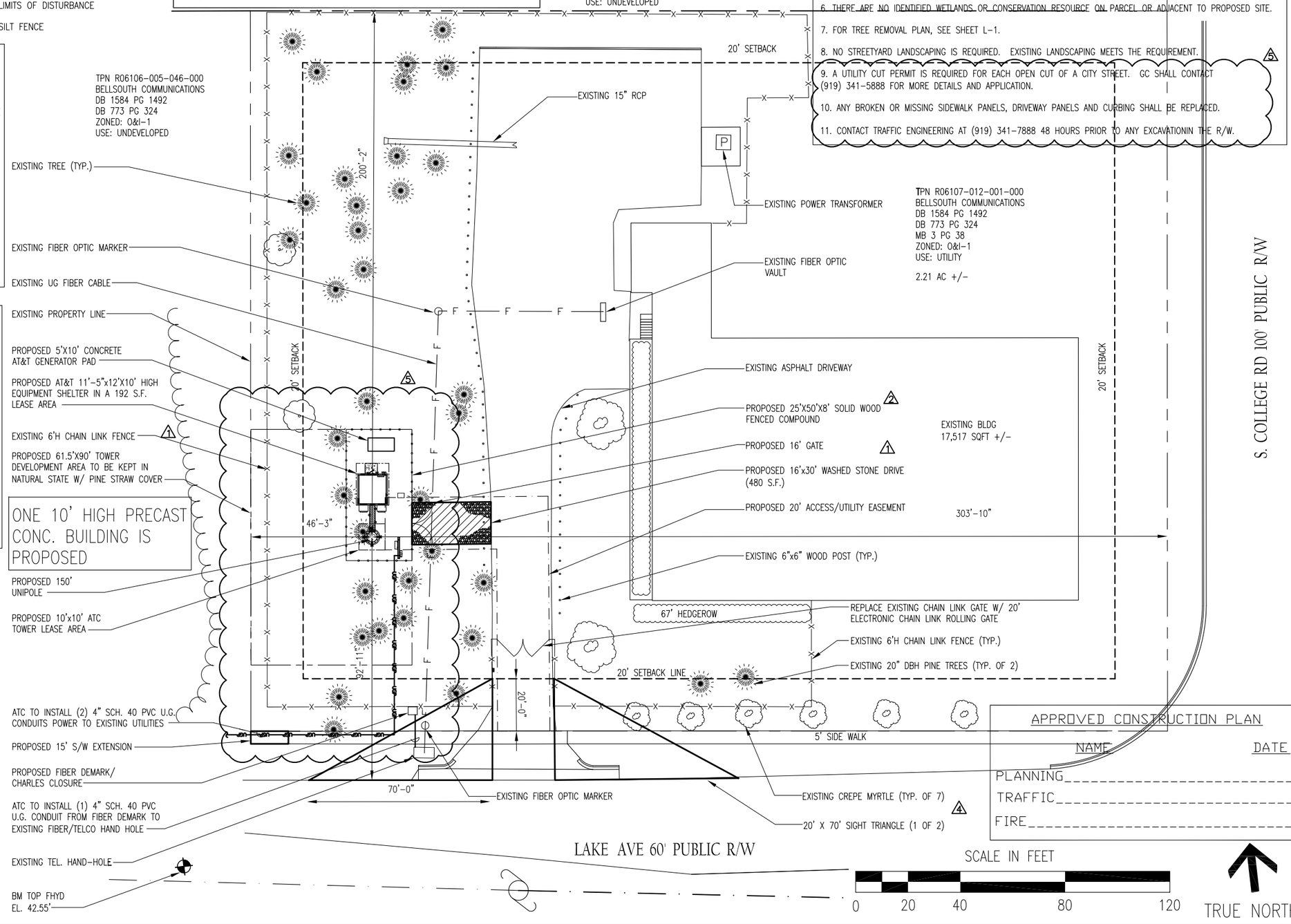

APPROVED CONSTRUCTION PLAN

	NAME	DATE
PLANNING		
TRAFFIC		
FIRE		

11"x17" - 1"=40'
24"x36" - 1"=20'

SITE PLAN

1

AMERICAN TOWER CORPORATION
496 LONG POINT ROAD
MOUNT PLEASANT, SC 29464
TEL.: (843) 971-8385
FAX: (843) 971-8889

THESE DRAWINGS AND/OR THE ACCOMPANYING SPECIFICATION AS INSTRUMENTS OF SERVICE, ARE THE EXCLUSIVE PROPERTY OF AMERICAN TOWER CORPORATION AND THEIR USE AND PUBLICATION SHALL BE RESTRICTED TO THE ORIGINAL SITE FOR WHICH THEY ARE PREPARED. REUSE, REPRODUCTION OR PUBLICATION BY ANY METHOD, IN WHOLE OR IN PART, IS PROHIBITED EXCEPT BY WRITTEN PERMISSION FROM AMERICAN TOWER CORPORATION TITLE TO THESE PLANS AND/OR SPECIFICATIONS SHALL REMAIN WITH AMERICAN TOWER CORPORATION WITHOUT PREJUDICE AND VISUAL CONTACT WITH THEM SHALL CONSTITUTE PRIMA FACIE EVIDENCE OF ACCEPTANCE OF THESE RESTRICTIONS.

BC architects engineers
5661 COLUMBIA PIKE, SUITE 200
FALLS CHURCH, VA 22041-2868
TEL: (703) 671-6000
FAX: (703) 671-6300

SHEET REVISION

NO.	DESCRIPTION	BY	DATE
1	CITY CHGS.	AGT	04-24-14
2	CITY CHGS.	DS	06-24-14
3	FENCE SETBACKS	DS	07-30-14
4	SIGHT TRIANGLES	DS	08-01-14
5	CITY COMMENTS	AGT	09-15-14
6			

ATC SITE NUMBER:
275164
ATC SITE NAME:
MAC RAE PARK NC
SITE ADDRESS:
4417 LAKE AVE.
WILMINGTON, NC 28409

STAMP HERE:
NORTH CAROLINA PROFESSIONAL SEAL 0024902 ENGINEER CHRISTOPHER D. MORIN
9.15.14

DRAWN BY:	AGT
CHECKED BY:	DRS
DATE DRAWN:	03-24-14
SUBMISSION:	FINAL CD'S

SHEET TITLE:
SITE PLAN

SHEET NUMBER: A-0
REV. #: 5

09-15-14 ARNOLD 09:16:06 Y:/Drawings - 2013/ATC/Mac Rae Park NC - 275164/_CD's Rev 5 2014-09-09/A0.dwg

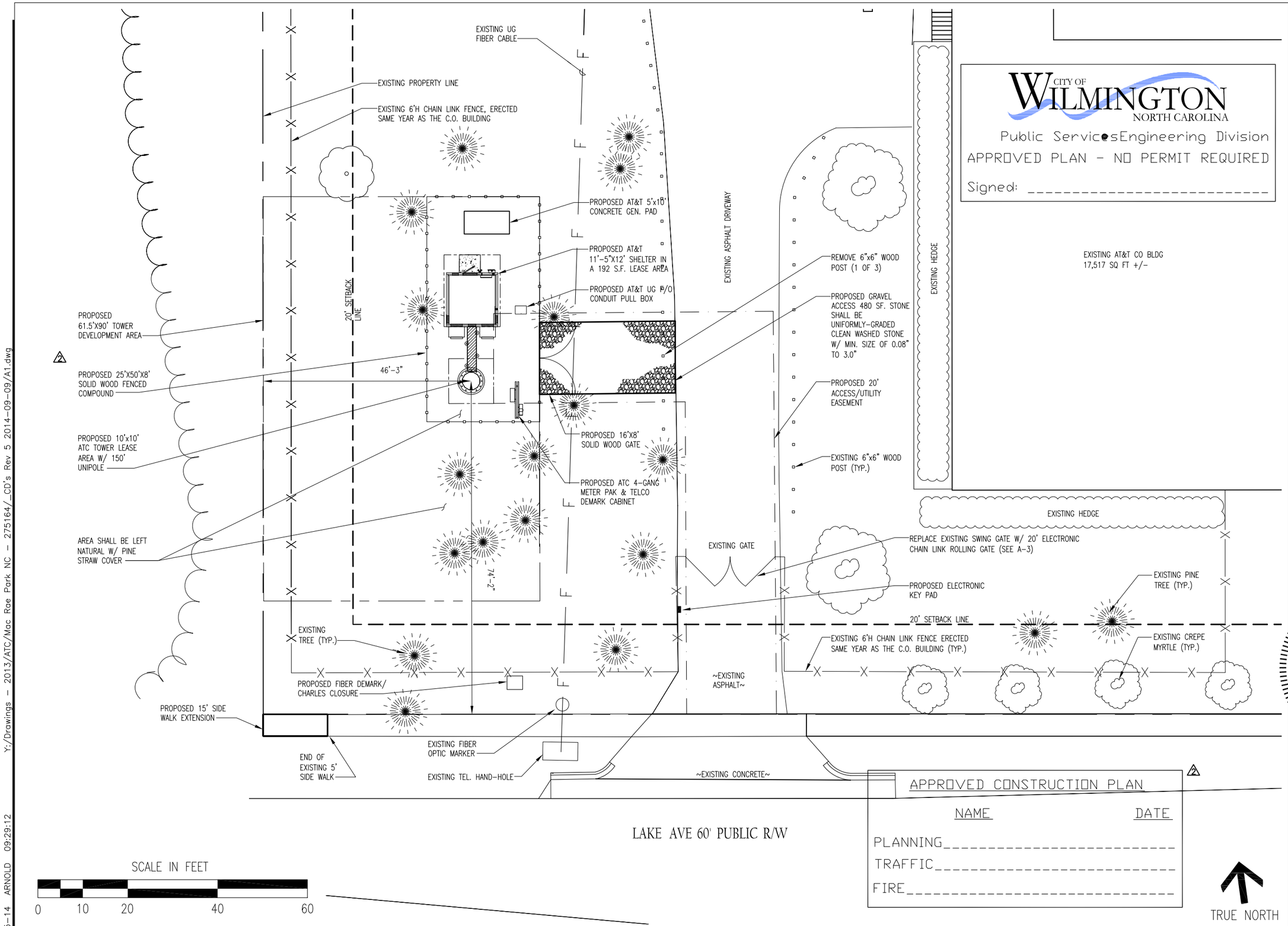

CITY OF WILMINGTON NORTH CAROLINA
Public Services Engineering Division
APPROVED PLAN - NO PERMIT REQUIRED
Signed: _____

APPROVED CONSTRUCTION PLAN

NAME	DATE
PLANNING	
TRAFFIC	
FIRE	

AMERICAN TOWER® CORPORATION
496 LONG POINT ROAD
MOUNT PLEASANT, SC 29464
TEL.: (843) 971-8385
FAX: (843) 971-8889

THESE DRAWINGS AND/OR THE ACCOMPANYING SPECIFICATION AS INSTRUMENTS OF SERVICE, ARE THE EXCLUSIVE PROPERTY OF AMERICAN TOWER CORPORATION AND THEIR USE AND PUBLICATION SHALL BE RESTRICTED TO THE ORIGINAL SITE FOR WHICH THEY ARE PREPARED. REUSE, REPRODUCTION OR PUBLICATION BY ANY METHOD, IN WHOLE OR IN PART, IS PROHIBITED EXCEPT BY WRITTEN PERMISSION FROM AMERICAN TOWER CORPORATION TITLE TO THESE PLANS AND/OR SPECIFICATIONS SHALL REMAIN WITH AMERICAN TOWER CORPORATION WITHOUT PREJUDICE AND VISUAL CONTACT WITH THEM SHALL CONSTITUTE PRIMA FACIE EVIDENCE OF ACCEPTANCE OF THESE RESTRICTIONS.

BC architects engineers
5661 COLUMBIA PIKE, SUITE 200
FALLS CHURCH, VA 22041-2868
TEL: (703) 671-6000
FAX: (703) 671-6300

SHEET REVISION

NO.	DESCRIPTION	BY	DATE
1	CLIENT CHGS.	AGT	01-10-14
2	CITY COMMENTS	DS	06-24-14
3	CITY COMMENTS	AGT	09-15-14
4			
5			
6			

ATC SITE NUMBER:
275164
ATC SITE NAME:
MAC RAE PARK NC
SITE ADDRESS:
4417 LAKE AVE.
WILMINGTON, NC 28409

STAMP HERE:
NORTH CAROLINA PROFESSIONAL SEAL 0024902 ENGINEER CHRISTOPHER D. MORIN
9.15.14

DRAWN BY:	AGT
CHECKED BY:	DRS
DATE DRAWN:	03-24-14
SUBMISSION:	FINAL CD'S

SHEET TITLE:
ENLARGED SITE PLAN

SHEET NUMBER: A-1
REV. #: 3

11"x17" - 1"=20'
24"x36" - 1"=10'

ENLARGED SITE PLAN

1

09-15-14 ARNOLD 09:29:12 Y:/Drawings - 2013/ATC/Mac Rae Park NC - 275164/_CD's Rev 5 2014-09-09/A1.dwg

NOTES:

G.C. SHALL TEST AND DOCUMENT THAT THE TOWER LIGHTING SYSTEMS ARE FUNCTIONING PROPERLY DURING & UPON COMPLETION OF EQUIPMENT INSTALLATION.

G.C. WILL PERFORM TWO HEIGHT VERIFICATIONS ON AT&T PROVIDED FORMS AS FOLLOWS:

TAPE DROP #1 SHALL BE SUBMITTED TO THE APPROPRIATE AT&T TOWER CONSTRUCTION MANAGER WITHIN (24) HOURS UPON COMPLETION OF THE TOWER ERECTION AND WILL DOCUMENT THE DIMENSION FROM THE GROUND TO HIGHEST POINT ON THE TOWER (I.E.: LIGHTNING ROD).

TAPE DROP #2 SHALL BE PERFORMED AND SUBMITTED TO THE APPROPRIATE AT&T CONSTRUCTION MANAGER WITHIN (72) HOURS UPON COMPLETION OF THE ANTENNA AND LINE INSTALLATION. THIS FORM WILL ACCOMPANY THE SWEEP TEST REPORTS AND WILL DOCUMENT THE DIMENSION FROM THE GROUND TO THE TOP OF AT&T'S ANTENNAS.

IT IS THE RESPONSIBILITY OF THE GENERAL CONTRACTOR TO INVENTORY THE TOWER MATERIALS UPON DELIVERY TO THE SITE. A BILL OF MATERIAL, (PACKING LIST(S) WILL BE INCLUDED WITH THE SHIPMENT. IF THIS LIST OR LISTS ARE NOT INCLUDED, PLEASE NOTIFY THE AT&T PROJECT MANAGER IMMEDIATELY. FAILURE TO REPORT MATERIAL SHORTAGES OR DAMAGED GOODS WITHIN 48 HOURS OF RECEIPT WILL INDICATE THE G.C. HAS ACCEPTED ALL MATERIAL IN GOOD CONDITION AND ALL IS ACCOUNTED FOR.

ANY MATERIAL SHORTAGES OR DAMAGES REPORTED AFTER 48 HOURS WILL AT THAT POINT BE THE RESPONSIBILITY OF THE G.C. TO HAVE CORRECTED BY THE TOWER VENDOR AT HIS/HER EXPENSE.

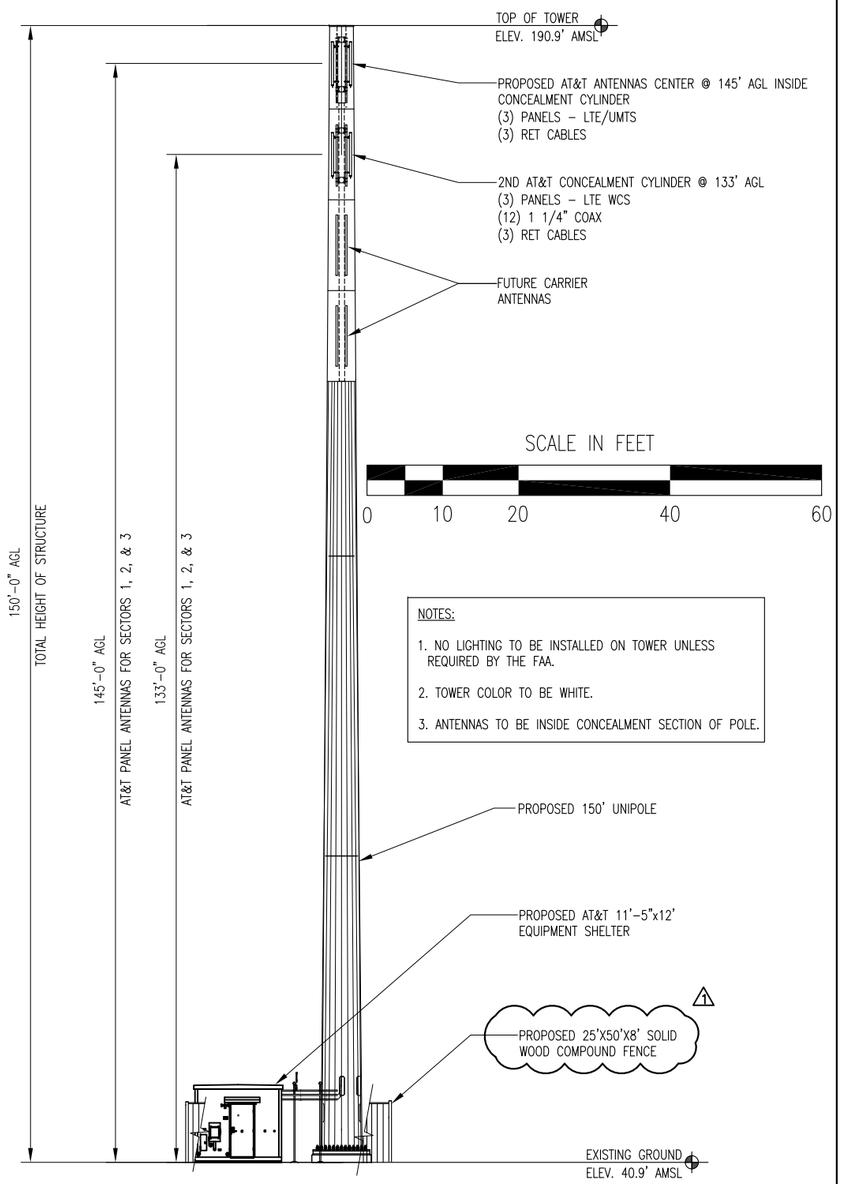

NOTES:

1. NO LIGHTING TO BE INSTALLED ON TOWER UNLESS REQUIRED BY THE FAA.
2. TOWER COLOR TO BE WHITE.
3. ANTENNAS TO BE INSIDE CONCEALMENT SECTION OF POLE.

1"=20' | TOWER ELEVATION | 1

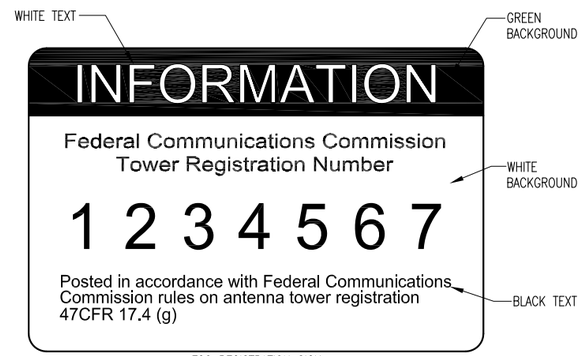

FCC REGISTRATION SIGN

WHITE/GREEN BACKGROUND, WHITE/BLACK LETTERING
MOUNTING LOCATION: GATE & BASE OF TOWER
QUANTITY: 2

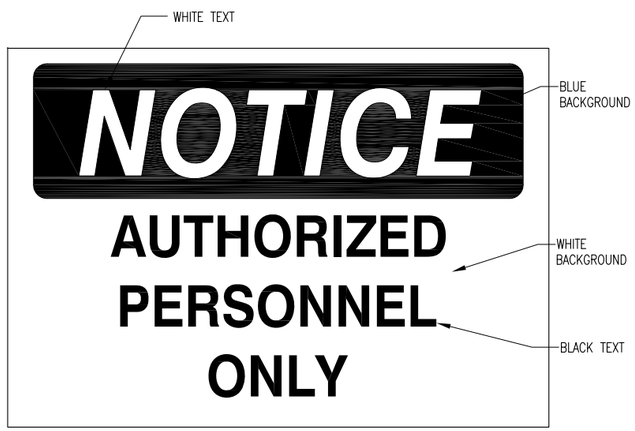

QTY: (4) EACH SIDE OF COMPOUND

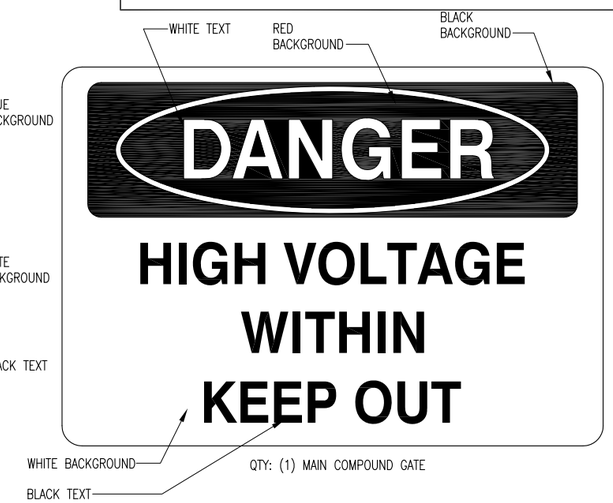

QTY: (1) MAIN COMPOUND GATE

AMERICAN TOWER CORPORATION

SITE NAME: _____
SITE NUMBER: _____
FCC REGISTRATION NUMBER: _____

FOR LEASING INFORMATION:
877-282-7483
877-ATC-SITE

IN CASE OF EMERGENCY:
877-518-6937
877-51-TOWER

NO TRESPASSING

www.americantower.com
POSTING OF THIS SIGN REQUIRED BY LAW

OWNER CONTACT SIGN

WHITE BACKGROUND, BLACK/RED LETTERING
MOUNTING LOCATION: GATE
QUANTITY: 1

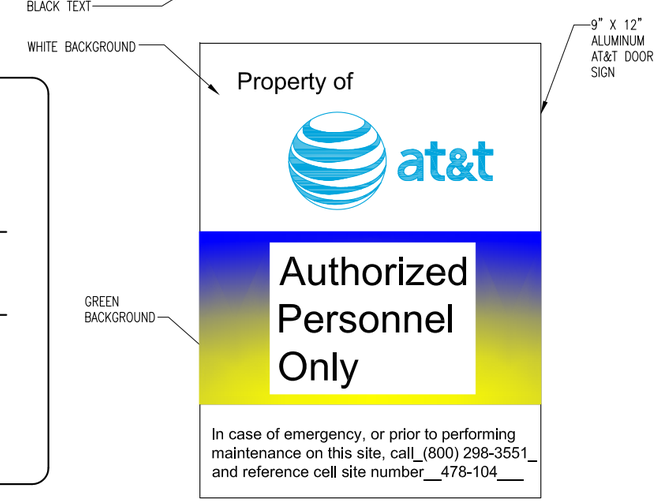

AT&T DOOR SIGN

1. SIGN CAN BE OBTAINED FROM ST. CLAIR SIGNS, INC.
3184 WADE HAMPTON BLVD. TAYLORS, SC 29687
(864) 244-0044

N.T.S. | SIGNAGE SPECIFICATIONS | 2

CITY OF WILMINGTON NORTH CAROLINA
Public Services Engineering Division
APPROVED PLAN - NO PERMIT REQUIRED
Signed: _____

⚠ APPROVED CONSTRUCTION PLAN

NAME DATE
PLANNING_____
TRAFFIC_____
FIRE_____

AMERICAN TOWER CORPORATION
496 LONG POINT ROAD
MOUNT PLEASANT, SC 29464
TEL.: (843) 971-8385
FAX: (843) 971-8889

THESE DRAWINGS AND/OR THE ACCOMPANYING SPECIFICATION AS INSTRUMENTS OF SERVICE, ARE THE EXCLUSIVE PROPERTY OF AMERICAN TOWER CORPORATION AND THEIR USE AND PUBLICATION SHALL BE RESTRICTED TO THE ORIGINAL SITE FOR WHICH THEY ARE PREPARED. REUSE, REPRODUCTION OR PUBLICATION BY ANY METHOD, IN WHOLE OR IN PART, IS PROHIBITED EXCEPT BY WRITTEN PERMISSION FROM AMERICAN TOWER CORPORATION TITLE TO THESE PLANS AND/OR SPECIFICATIONS SHALL REMAIN WITH AMERICAN TOWER CORPORATION WITHOUT PREJUDICE AND VISUAL CONTACT WITH THEM SHALL CONSTITUTE PRIMA FACIE EVIDENCE OF ACCEPTANCE OF THESE RESTRICTIONS.

BC architects engineers
5661 COLUMBIA PIKE, SUITE 200
FALLS CHURCH, VA 22041-2868
TEL: (703) 671-6000
FAX: (703) 671-6300

SHEET REVISION

NO.	DESCRIPTION	BY	DATE
1	CITY CHGS.	DS	06-24-14
2			
3			
4			
5			
6			

ATC SITE NUMBER:
275164
ATC SITE NAME:
MAC RAE PARK NC
SITE ADDRESS:
4417 LAKE AVE.
WILMINGTON, NC 28409

STAMP HERE:
NORTH CAROLINA PROFESSIONAL SEAL 0024902 ENGINEER CHRISTOPHER D. MORIN
9.15.14

DRAWN BY:	AGT
CHECKED BY:	DRS
DATE DRAWN:	03-24-14
SUBMISSION:	FINAL CD'S

SHEET TITLE:
TOWER ELEVATION & SIGNAGE SPECIFICATIONS

SHEET NUMBER: A-2
REV. #: 1

02-11-14 VICTOR GARCIA 10:31:48 Y:/Drawings - 2013/ATC/Mac Rae Park NC - 275164/_CD's_2014.02.10/A2.dwg

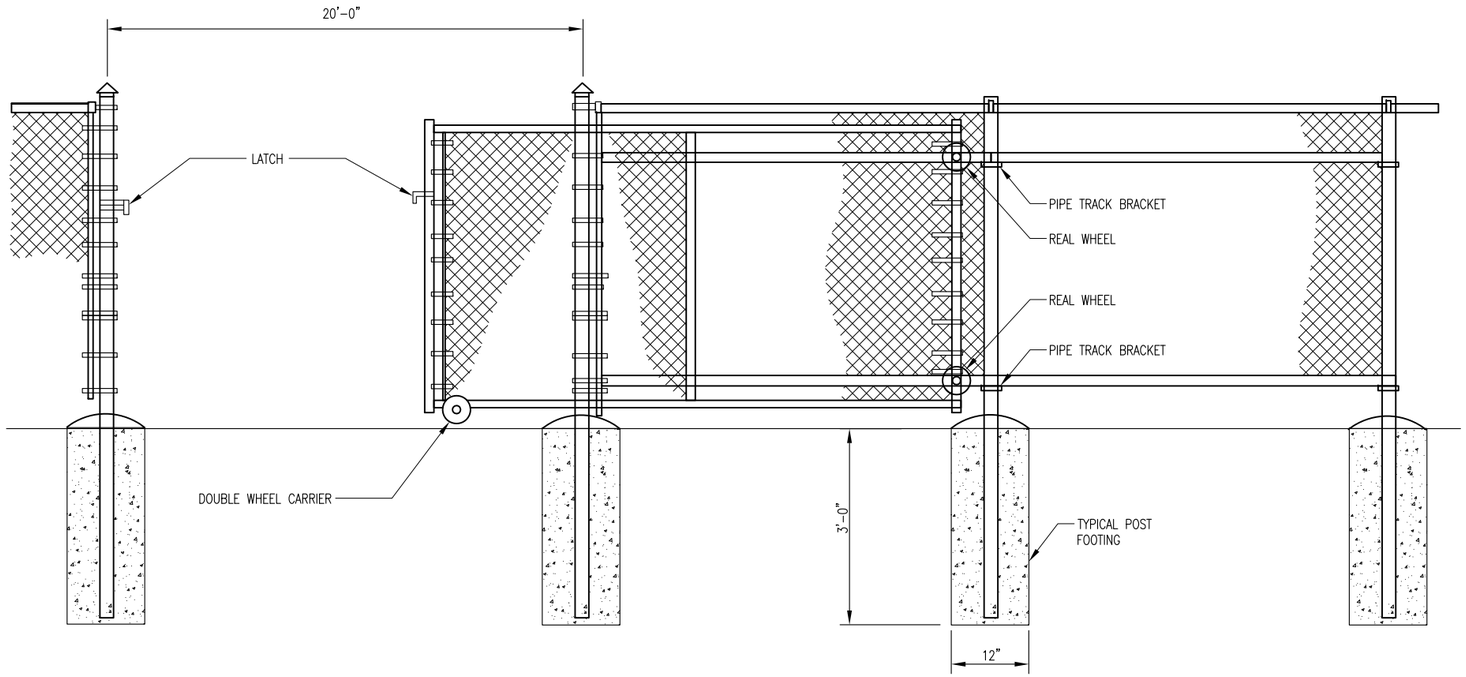

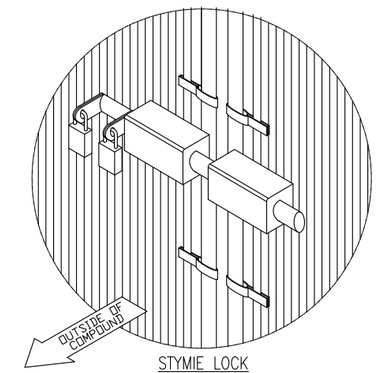

STYMIE LOCK
(U.S. PAT 5868015)

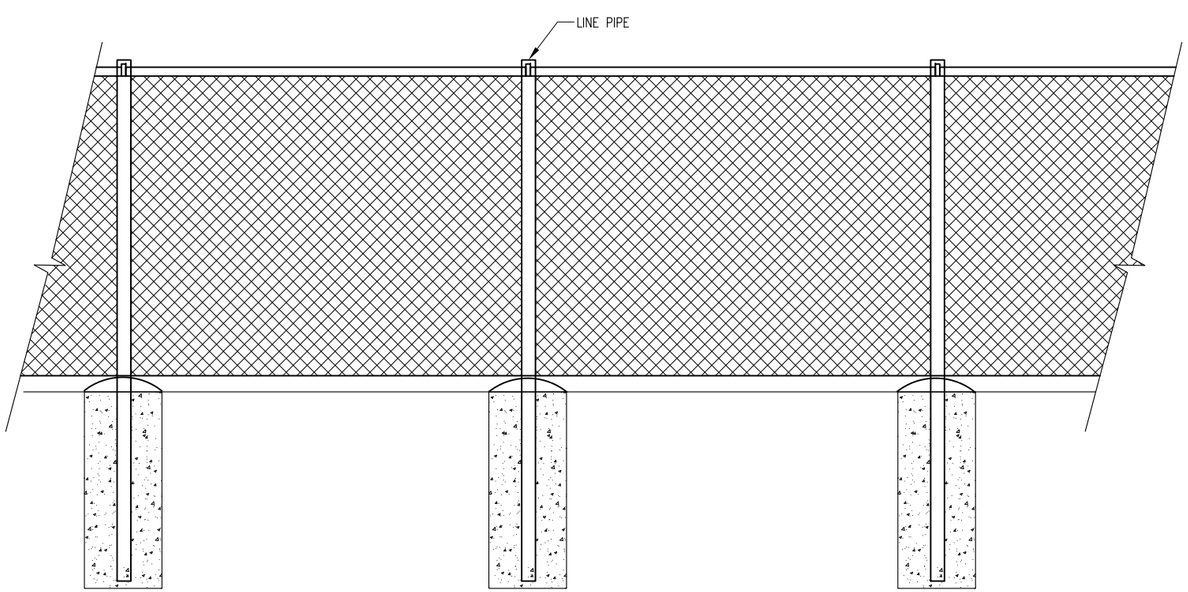

CITY OF WILMINGTON
NORTH CAROLINA
Public Services Engineering Division
APPROVED PLAN - NO PERMIT REQUIRED
Signed: _____

STORE EXTRA PARTS OF MULTI-LOCK DEVICE IN TELCO CABINET.

NO PLUNGER OR MUSHROOM REQUIRED.

HOOVER FENCE
5531 MCCLINTOCKSBURG RD
NEWTOWN FALLS, OH. 44444
1 (800) 355-2335

(OR APPROVED EQUAL)

APPROVED CONSTRUCTION PLAN

	NAME	DATE
PLANNING		
TRAFFIC		
FIRE		

REFERENCE NOTES:

1. CORNER, END OR PULL POST: 3" NOMINAL SCHEDULE 40 PIPE.
2. LINE POST: 2 1/2" SCHEDULE 40 PIPE, PER ASTM-F1083. LINE POSTS SHALL BE EQUALLY SPACED AT MAXIMUM OF 8'-0" O.C.
3. TOP RAIL & BRACE RAIL: 1 1/2" PIPE, PER ASTM-F1083.
4. FABRIC: 9 GA CORE WIRE SIZE 2" MESH, CONFORMING TO ASTM-A392.
5. GATE POST: CONCRETE FOUNDATION (3000 PSI).
6. TENSION WIRE: 9 GA. GALVANIZED STEEL.
7. FINISH GRADE SHALL BE UNIFORM AND LEVEL.
8. GATE POST: 4" SCHEDULE 40 PIPE, FOR GATE WIDTHS UP THRU 7 FEET OR 14 FEET FOR DOUBLE SWING GATE, PER ASTM-F1083.
9. 3/8" DIAGONAL ROD WITH GALVANIZED STEEL TURNBUCKLE OR DIAGONAL THREADED ROD.
10. FENCE CORNER POST BRACE: 1 5/8" DIA. EACH CORNER EACH WAY.

N.T.S.

PROPOSED KEY PAD OPERATED ELECTRONIC GATE CROSS SECTION DETAIL

1

AMERICAN TOWER® CORPORATION
496 LONG POINT ROAD
MOUNT PLEASANT, SC 29464
TEL.: (843) 971-8385
FAX: (843) 971-8889

THESE DRAWINGS AND/OR THE ACCOMPANYING SPECIFICATION AS INSTRUMENTS OF SERVICE, ARE THE EXCLUSIVE PROPERTY OF AMERICAN TOWER CORPORATION AND THEIR USE AND PUBLICATION SHALL BE RESTRICTED TO THE ORIGINAL SITE FOR WHICH THEY ARE PREPARED. REUSE, REPRODUCTION OR PUBLICATION BY ANY METHOD, IN WHOLE OR IN PART, IS PROHIBITED EXCEPT BY WRITTEN PERMISSION FROM AMERICAN TOWER CORPORATION TITLE TO THESE PLANS AND/OR SPECIFICATIONS SHALL REMAIN WITH AMERICAN TOWER CORPORATION WITHOUT PREJUDICE AND VISUAL CONTACT WITH THEM SHALL CONSTITUTE PRIMA FACIE EVIDENCE OF ACCEPTANCE OF THESE RESTRICTIONS.

BC architects engineers
5661 COLUMBIA PIKE, SUITE 200
FALLS CHURCH, VA 22041-2868
TEL: (703) 671-6000
FAX: (703) 671-6300

SHEET REVISION

NO.	DESCRIPTION	BY	DATE
1			
2			
3			
4			
5			
6			

ATC SITE NUMBER:
275164
ATC SITE NAME:
MAC RAE PARK NC
SITE ADDRESS:
4417 LAKE AVE.
WILMINGTON, NC 28409

STAMP HERE:
NORTH CAROLINA PROFESSIONAL SEAL 0024902 ENGINEER CHRISTOPHER D. MORIN
9.15.14

DRAWN BY:	AGT
CHECKED BY:	DRS
DATE DRAWN:	03-24-14
SUBMISSION:	FINAL CD'S

SHEET TITLE:
FENCE, GATE AND COMPOUND CROSS SECTION DETAIL

SHEET NUMBER: A-3
REV. #

09-09-14 ARNOLD 16:42:39 Y:/Drawings - 2013/ATC/Mac Rae Park NC - 275164/_CD's Rev 5 2014-09-09/A3.dwg

CITY OF WILMINGTON NORTH CAROLINA

Public Services Engineering Division

APPROVED PLAN - NO PERMIT REQUIRED

Signed: _____

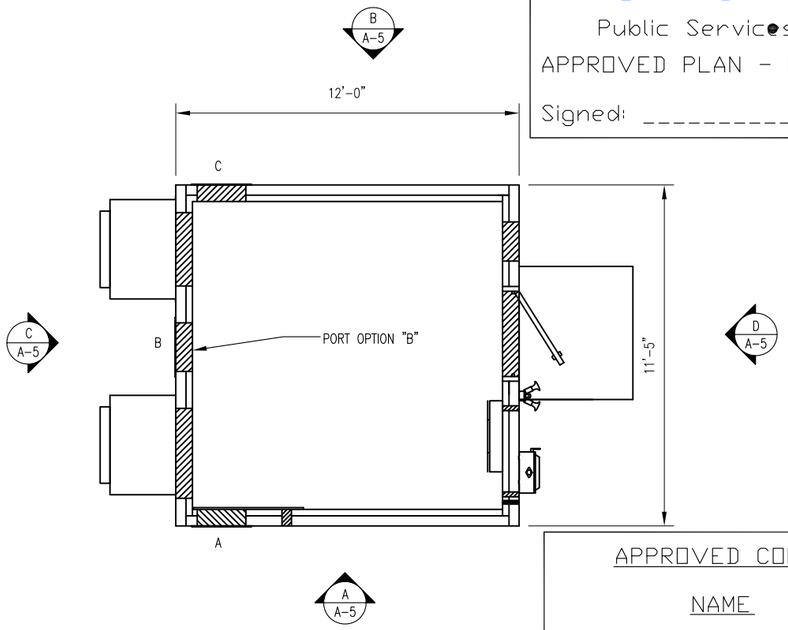

APPROVED CONSTRUCTION PLAN

NAME	DATE
PLANNING	
TRAFFIC	
FIRE	

N.T.S. AT&T STANDARD FIBREBOND SHELTER 1

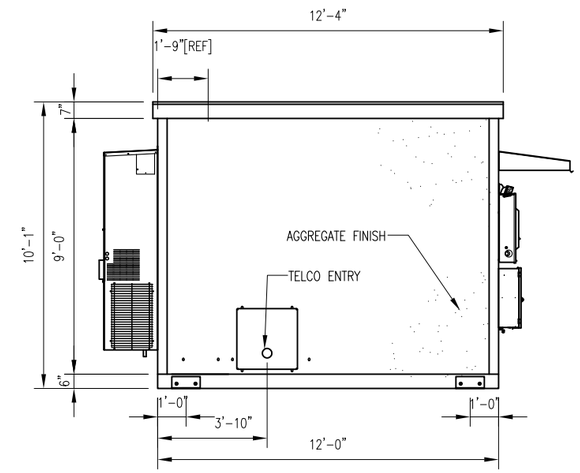

N.T.S. ELEVATION A

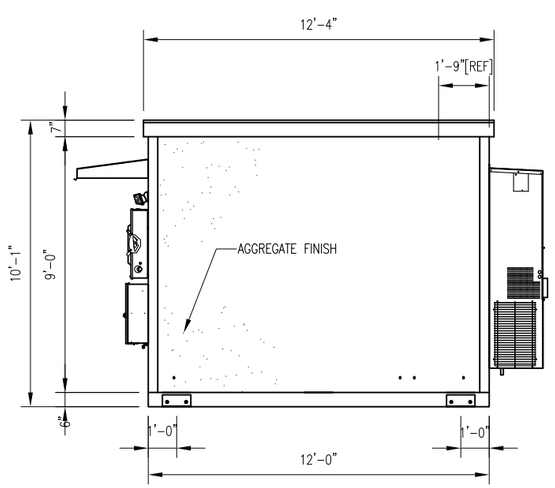

N.T.S. ELEVATION B

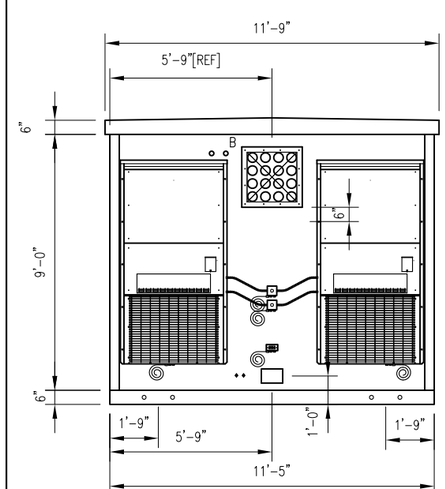

N.T.S. ELEVATION C

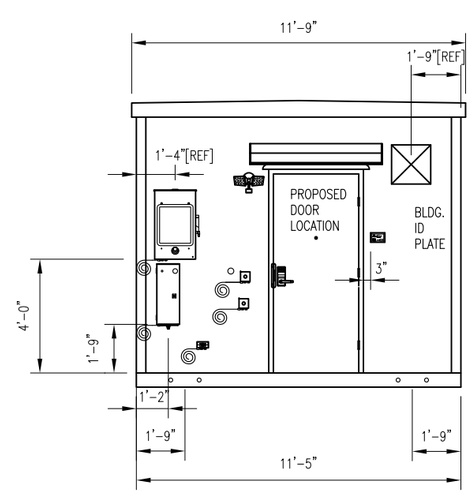

N.T.S. ELEVATION D

AMERICAN TOWER® CORPORATION
496 LONG POINT ROAD
MOUNT PLEASANT, SC 29464
TEL.: (843) 971-8385
FAX: (843) 971-8889

THESE DRAWINGS AND/OR THE ACCOMPANYING SPECIFICATION AS INSTRUMENTS OF SERVICE, ARE THE EXCLUSIVE PROPERTY OF AMERICAN TOWER CORPORATION AND THEIR USE AND PUBLICATION SHALL BE RESTRICTED TO THE ORIGINAL SITE FOR WHICH THEY ARE PREPARED. REUSE, REPRODUCTION OR PUBLICATION BY ANY METHOD, IN WHOLE OR IN PART, IS PROHIBITED EXCEPT BY WRITTEN PERMISSION FROM AMERICAN TOWER CORPORATION TITLE TO THESE PLANS AND/OR SPECIFICATIONS SHALL REMAIN WITH AMERICAN TOWER CORPORATION WITHOUT PREJUDICE AND VISUAL CONTACT WITH THEM SHALL CONSTITUTE PRIMA FACIE EVIDENCE OF ACCEPTANCE OF THESE RESTRICTIONS.

BC architects engineers
5661 COLUMBIA PIKE, SUITE 200
FALLS CHURCH, VA 22041-2868
TEL: (703) 671-6000
FAX: (703) 671-6300

SHEET REVISION

NO.	DESCRIPTION	BY	DATE
1			
2			
3			
4			
5			
6			

ATC SITE NUMBER:
275164

ATC SITE NAME:
MAC RAE PARK NC

SITE ADDRESS:
4417 LAKE AVE.
WILMINGTON, NC 28409

STAMP HERE:

NORTH CAROLINA PROFESSIONAL SEAL 0024902 ENGINEER CHRISTOPHER D. MORIN
9.15.14

DRAWN BY:	AGT
CHECKED BY:	DRS
DATE DRAWN:	03-24-14
SUBMISSION:	FINAL CD'S

SHEET TITLE:

SHELTER LAYOUT AND ELEVATIONS

SHEET NUMBER: **A-4**

REV. #

02-11-14 VICTOR GARCIA 10:32:39 Y:/Drawings - 2013/ATC/Mac Rae Park NC - 275164/_CD's_2014.02.10/A4.dwg

APPROVED CONSTRUCTION PLAN

NAME	DATE
PLANNING	
TRAFFIC	
FIRE	

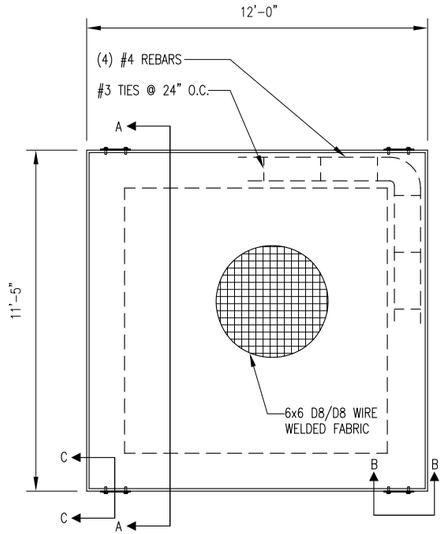

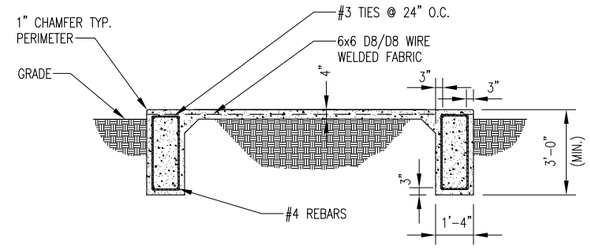

SECTION A –A

NOTES:

1. SLAB TO BE LEVEL ±1/4".
2. FOOTING TO EXTEND A MINIMUM OF 36" BELOW UNDISTURBED SOIL AND FROST LINE.
3. FINAL SITE DESIGN IS THE RESPONSIBILITY OF THE SITE CONTRACTOR.
4. SLAB FOUNDATION DESIGNED ASSUMING ALLOWABLE SOIL BEARING PRESSURE OF 2000 PSF.
5. SLAB FOUNDATION DESIGNED ASSUMING MAXIMUM SOIL PLASTICITY INDEX OF 27.
6. CONCRETE STRENGTH SHALL BE A MINIMUM OF 4000 PSI.
7. FOUNDATION SHALL BE IN ACCORDANCE WITH OBC.

NOTE: DETAIL PROVIDED BY FIBREBOND

N.T.S. | SLAB FOUNDATION | 1

CITY OF WILMINGTON NORTH CAROLINA

Public Services Engineering Division

APPROVED PLAN – NO PERMIT REQUIRED

Signed: _____

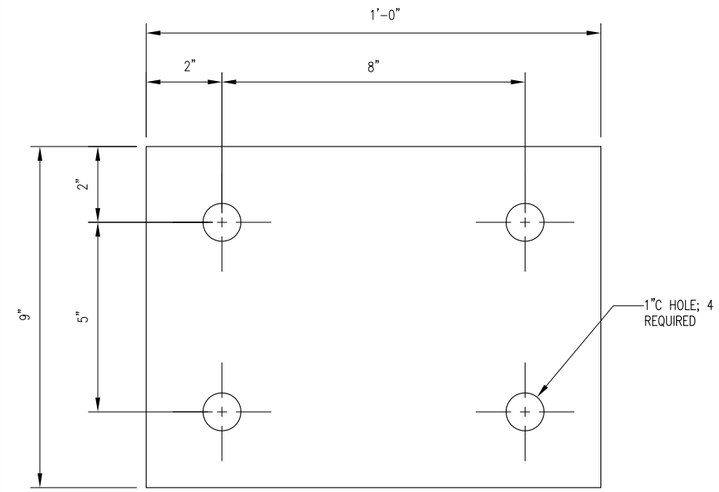

#193637 – RAW MATERIAL – 3/8" PLATE

N.T.S. | TIE DOWN PLATE DETAIL | 2

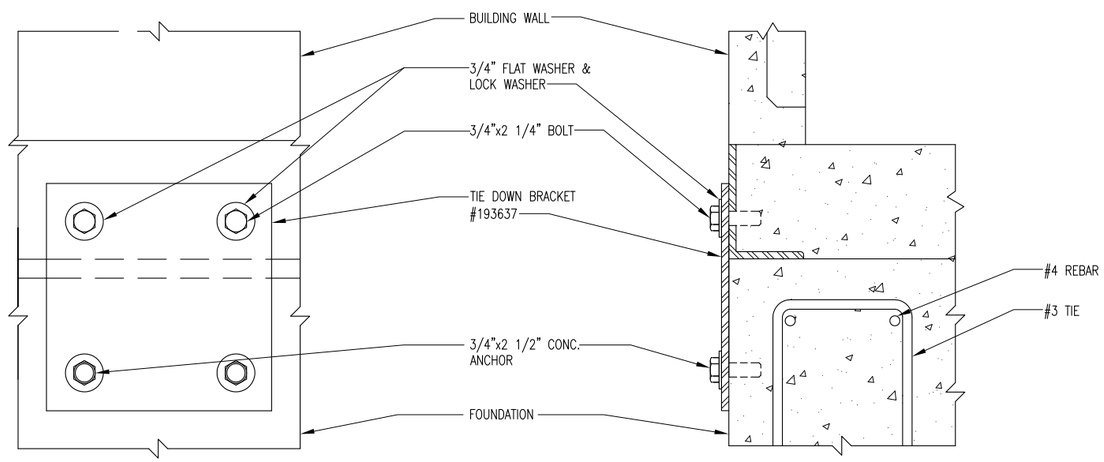

SECTION B–B

SECTION C–C

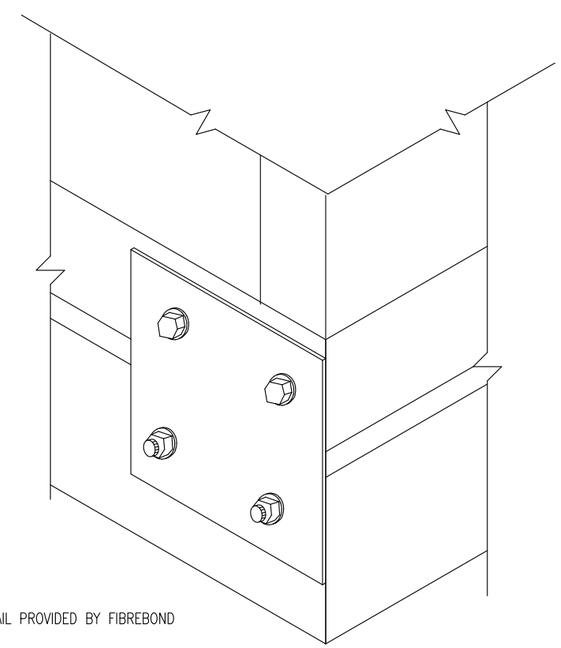

NOTE: DETAIL PROVIDED BY FIBREBOND

N.T.S. | SHELTER CONNECTION DETAILS | 3

AMERICAN TOWER CORPORATION
496 LONG POINT ROAD
MOUNT PLEASANT, SC 29464
TEL.: (843) 971-8385
FAX: (843) 971-8889

THESE DRAWINGS AND/OR THE ACCOMPANYING SPECIFICATION AS INSTRUMENTS OF SERVICE, ARE THE EXCLUSIVE PROPERTY OF AMERICAN TOWER CORPORATION AND THEIR USE AND PUBLICATION SHALL BE RESTRICTED TO THE ORIGINAL SITE FOR WHICH THEY ARE PREPARED. REUSE, REPRODUCTION OR PUBLICATION BY ANY METHOD, IN WHOLE OR IN PART, IS PROHIBITED EXCEPT BY WRITTEN PERMISSION FROM AMERICAN TOWER CORPORATION TITLE TO THESE PLANS AND/OR SPECIFICATIONS SHALL REMAIN WITH AMERICAN TOWER CORPORATION WITHOUT PREJUDICE AND VISUAL CONTACT WITH THEM SHALL CONSTITUTE PRIMA FACIE EVIDENCE OF ACCEPTANCE OF THESE RESTRICTIONS.

BC architects engineers
5661 COLUMBIA PIKE, SUITE 200
FALLS CHURCH, VA 22041-2868
TEL: (703) 671-6000
FAX: (703) 671-6300

SHEET REVISION

NO.	DESCRIPTION	BY	DATE
1			
2			
3			
4			
5			
6			

ATC SITE NUMBER:
275164

ATC SITE NAME:
MAC RAE PARK NC

SITE ADDRESS:
4417 LAKE AVE.
WILMINGTON, NC 28409

STAMP HERE:
NORTH CAROLINA PROFESSIONAL SEAL 0024902 ENGINEER CHRISTOPHER D. MORIN
9.15.14

DRAWN BY:	AGT
CHECKED BY:	DRS
DATE DRAWN:	03-24-14
SUBMISSION:	FINAL CD'S

SHEET TITLE:
SHELTER FOUNDATION & CONNECTION DETAILS

SHEET NUMBER: A-5

REV. #

02-11-14 VICTOR GARCIA 10:34:50 Y:/Drawings – 2013/ATC/Mac Rae Park NC – 275164/_CD's_2014.02.10/A5.dwg

NOTES:

1. DESIGN REQUIREMENTS ARE PER LOCAL BUILDING CODE/1994 ANSI/ASCE7, EIA/TIA-222-G STRUCTURAL STANDARDS FOR STEEL ANTENNA SUPPORTING STRUCTURES AND ALL APPLICABLE STATE AND LOCAL CODES. THE BASIC GROUND WIND SPEED UTILIZED FOR DESIGN IS 100 MPH.
2. REFER TO THE SITE PLAN PREPARED BY OTHERS FOR BOUNDARY SURVEY AND SITE TOPOGRAPHY.
3. CONCRETE EQUIPMENT PAD SHALL BE PLACED OVER UNDISTURBED OR WELL COMPACTED SOIL, SEE NOTE 4.
4. EXISTING VEGETATION AND ORGANIC MATERIALS SHALL BE REMOVED FROM THE CONCRETE EQUIPMENT PAD AREAS. FILL SITE TO ORIGINAL ELEVATION WITH CLEAN SANDY SOIL. COMPACT TO OBTAIN 2500 PSF BEARING CAPACITY.
5. ALL THREADED STRUCTURAL FASTENERS FOR ANTENNA SUPPORT ASSEMBLIES SHALL CONFORM TO ASTM A325. FASTENERS SHALL BE 5/8" MINIMUM DIAMETER BEARING TYPE CONNECTIONS WITH THREADS INCLUDED IN THE SHEAR PLANE. ALL EXPOSED FASTENERS, NUTS AND WASHERS SHALL BE GALVANIZED UNLESS OTHERWISE NOTED. CONCRETE EXPANSION ANCHORS SHALL BE HILTI KWIK BOLTS OR EQUIVALENT UNLESS OTHERWISE NOTED.
6. TRANSMITTER EQUIPMENT SHALL BE FURNISHED BY THE OWNER AND IS NOT INCLUDED IN THESE CONSTRUCTION DOCUMENTS. A SCHEDULE OF OWNER PROVIDED HARDWARE IS ATTACHED TO BID DOCUMENTS (SEE ATTACHMENT E) ALL OTHER HARDWARE TO BE FURNISHED BY THE CONTRACTOR. CONNECTION HARDWARE SHALL BE STAINLESS STEEL.
7. SUPPORT POSTS SHALL BE SPACED 4'-0" MAX.
8. CABLE SUPPORT SPACING SHALL BE 3'-0" MAX.
9. ICE BRIDGE SHALL BE GALVANIZED GRIP-STRUT.
10. CONTRACTOR SHALL FURNISH AND INSTALL ICE BRIDGE STRUCTURE.

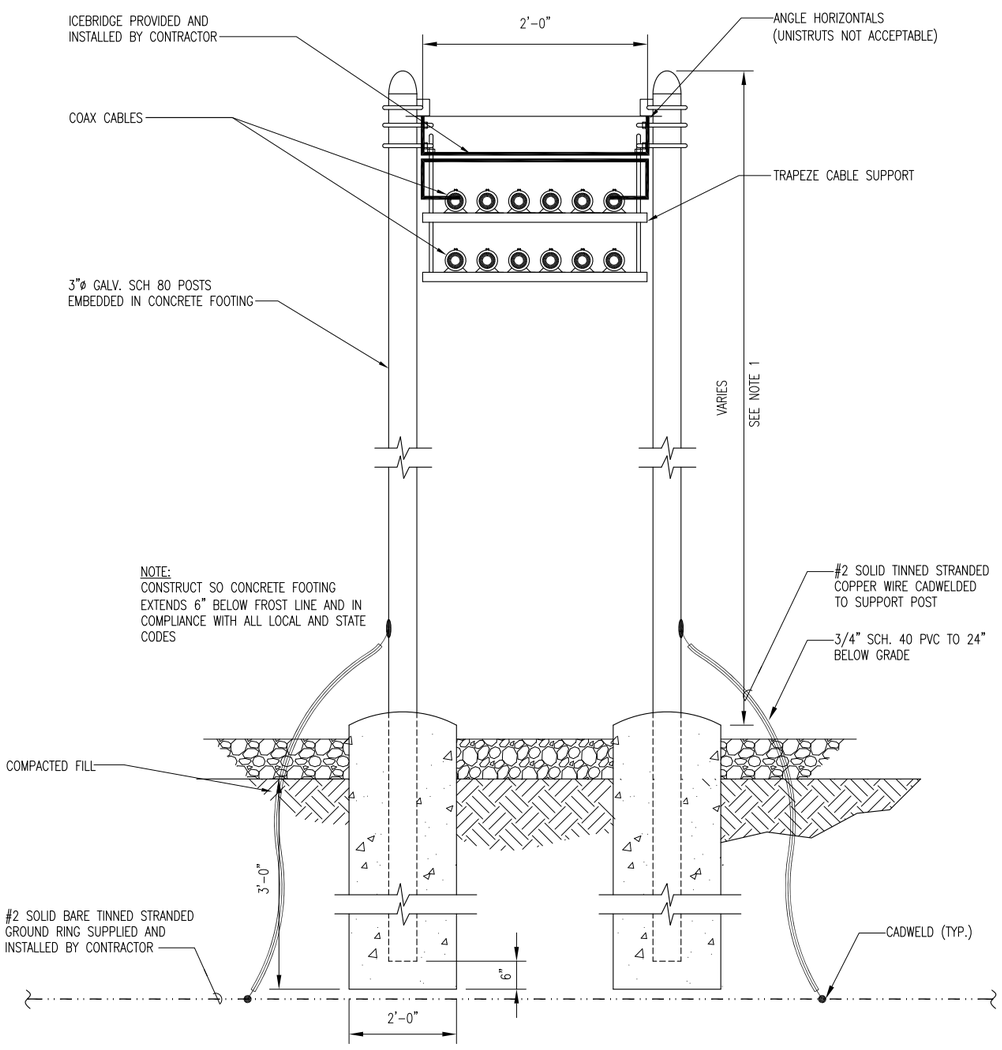

N.T.S. | CABLE SUPPORT POST ELEVATION | 1

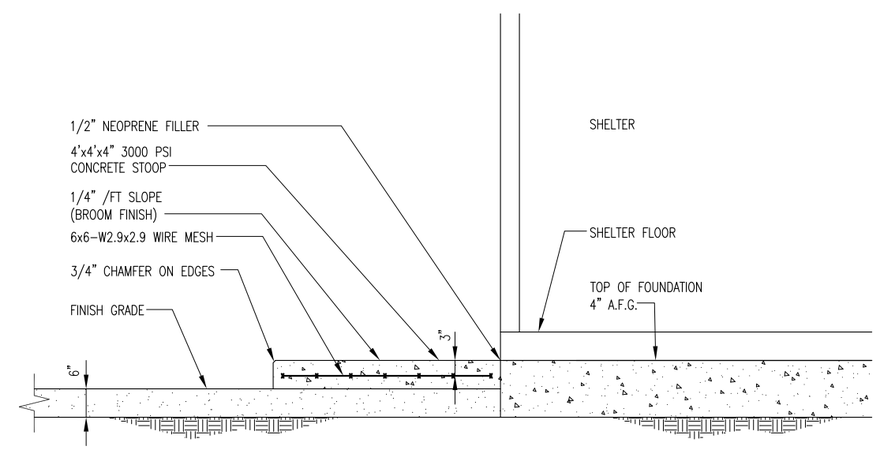

N.T.S. | CONCRETE STOOP DETAIL | 2

CITY OF WILMINGTON NORTH CAROLINA
Public Services • Engineering Division
APPROVED PLAN – NO PERMIT REQUIRED
Signed: _____

APPROVED CONSTRUCTION PLAN

	NAME	DATE
PLANNING		
TRAFFIC		
FIRE		

AMERICAN TOWER® CORPORATION
496 LONG POINT ROAD
MOUNT PLEASANT, SC 29464
TEL.: (843) 971-8385
FAX: (843) 971-8889

THESE DRAWINGS AND/OR THE ACCOMPANYING SPECIFICATION AS INSTRUMENTS OF SERVICE, ARE THE EXCLUSIVE PROPERTY OF AMERICAN TOWER CORPORATION AND THEIR USE AND PUBLICATION SHALL BE RESTRICTED TO THE ORIGINAL SITE FOR WHICH THEY ARE PREPARED. REUSE, REPRODUCTION OR PUBLICATION BY ANY METHOD, IN WHOLE OR IN PART, IS PROHIBITED EXCEPT BY WRITTEN PERMISSION FROM AMERICAN TOWER CORPORATION TITLE TO THESE PLANS AND/OR SPECIFICATIONS SHALL REMAIN WITH AMERICAN TOWER CORPORATION WITHOUT PREJUDICE AND VISUAL CONTACT WITH THEM SHALL CONSTITUTE PRIMA FACIE EVIDENCE OF ACCEPTANCE OF THESE RESTRICTIONS.

BC architects engineers
5661 COLUMBIA PIKE, SUITE 200
FALLS CHURCH, VA 22041-2868
TEL: (703) 671-6000
FAX: (703) 671-6300

SHEET REVISION

NO.	DESCRIPTION	BY	DATE
1			
2			
3			
4			
5			
6			

ATC SITE NUMBER:
275164
ATC SITE NAME:
MAC RAE PARK NC
SITE ADDRESS:
4417 LAKE AVE.
WILMINGTON, NC 28409

STAMP HERE:
NORTH CAROLINA PROFESSIONAL SEAL 0024902 ENGINEER CHRISTOPHER D. MORIN
9.15.14

DRAWN BY:	AGT
CHECKED BY:	DRS
DATE DRAWN:	03-24-14
SUBMISSION:	FINAL CD'S

SHEET TITLE:
DETAILS

SHEET NUMBER: A-6
REV. #

02-11-14 VICTOR GARCIA 10:36:04 Y:/Drawings - 2013/ATC/Mac Rae Park NC - 275164/_CD's_2014.02.10/A6.dwg

APPROVED CONSTRUCTION PLAN

NAME	DATE
PLANNING	
TRAFFIC	
FIRE	

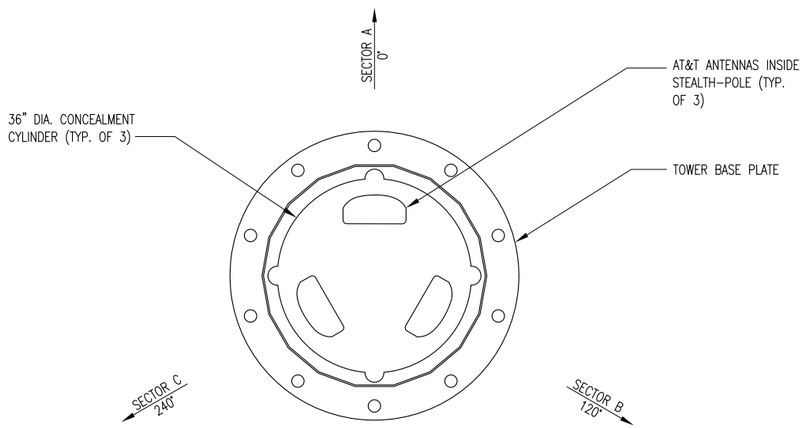

N.T.S. | PLAN VIEW OF AT&T ANTENNAS | 1

CITY OF WILMINGTON NORTH CAROLINA

Public Services Engineering Division

APPROVED PLAN - NO PERMIT REQUIRED

Signed: _____

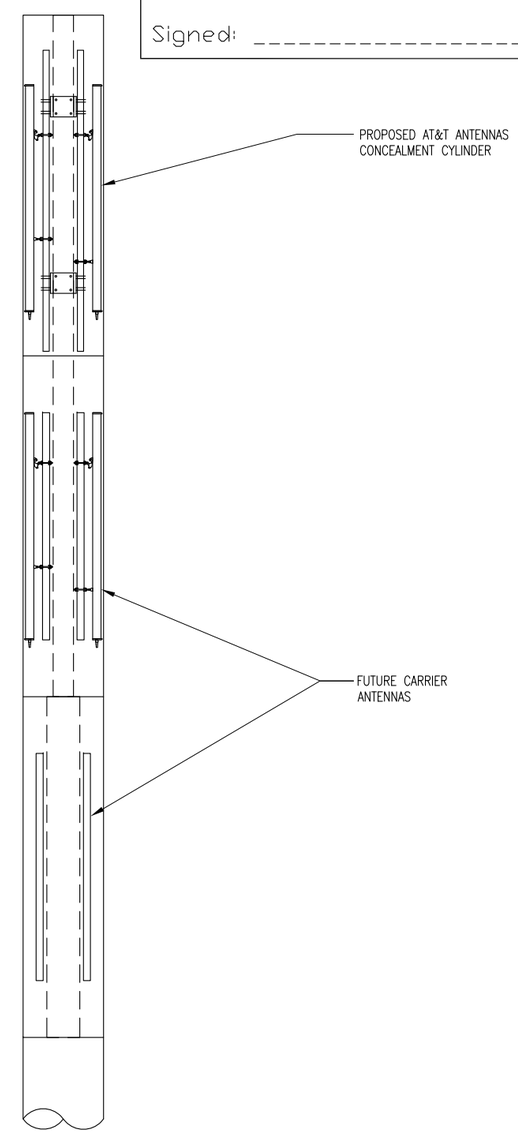

N.T.S. | ELEVATION OF AT&T ANTENNAS | 2

AMERICAN TOWER® CORPORATION
496 LONG POINT ROAD
MOUNT PLEASANT, SC 29464
TEL.: (843) 971-8385
FAX: (843) 971-8889

THESE DRAWINGS AND/OR THE ACCOMPANYING SPECIFICATION AS INSTRUMENTS OF SERVICE, ARE THE EXCLUSIVE PROPERTY OF AMERICAN TOWER CORPORATION AND THEIR USE AND PUBLICATION SHALL BE RESTRICTED TO THE ORIGINAL SITE FOR WHICH THEY ARE PREPARED. REUSE, REPRODUCTION OR PUBLICATION BY ANY METHOD, IN WHOLE OR IN PART, IS PROHIBITED EXCEPT BY WRITTEN PERMISSION FROM AMERICAN TOWER CORPORATION TITLE TO THESE PLANS AND/OR SPECIFICATIONS SHALL REMAIN WITH AMERICAN TOWER CORPORATION WITHOUT PREJUDICE AND VISUAL CONTACT WITH THEM SHALL CONSTITUTE PRIMA FACIE EVIDENCE OF ACCEPTANCE OF THESE RESTRICTIONS.

BC architects engineers
5661 COLUMBIA PIKE, SUITE 200
FALLS CHURCH, VA 22041-2868
TEL: (703) 671-6000
FAX: (703) 671-6300

SHEET REVISION

NO.	DESCRIPTION	BY	DATE
1			
2			
3			
4			
5			
6			

ATC SITE NUMBER:
275164

ATC SITE NAME:
MAC RAE PARK NC

SITE ADDRESS:
4417 LAKE AVE.
WILMINGTON, NC 28409

STAMP HERE:
NORTH CAROLINA PROFESSIONAL SEAL 0024902 ENGINEER CHRISTOPHER D. MORIN
9.15.14

DRAWN BY:	AGT
CHECKED BY:	DRS
DATE DRAWN:	03-24-14
SUBMISSION:	FINAL CD'S

SHEET TITLE:
AT&T ANTENNA DETAILS

SHEET NUMBER: A-7
REV. #

02-11-14 VICTOR GARCIA 10:37:19 Y:/Drawings - 2013/ATC/Mac Rae Park NC - 275164/_CD's_2014.02.10/A7.dwg

CITY OF WILMINGTON
NORTH CAROLINA
Public Services, Engineering Division
APPROVED PLAN – NO PERMIT REQUIRED
Signed: _____

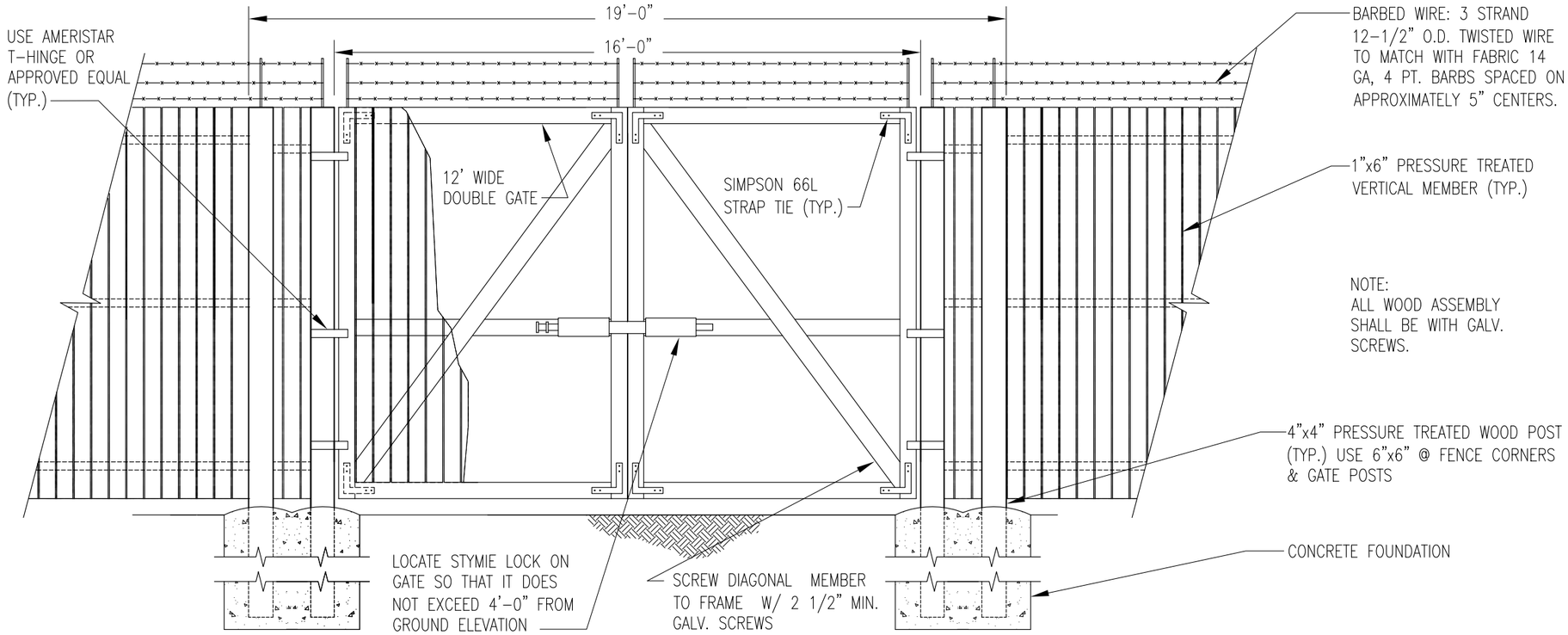

NOTE:
ALL WOOD ASSEMBLY SHALL BE WITH GALV. SCREWS.

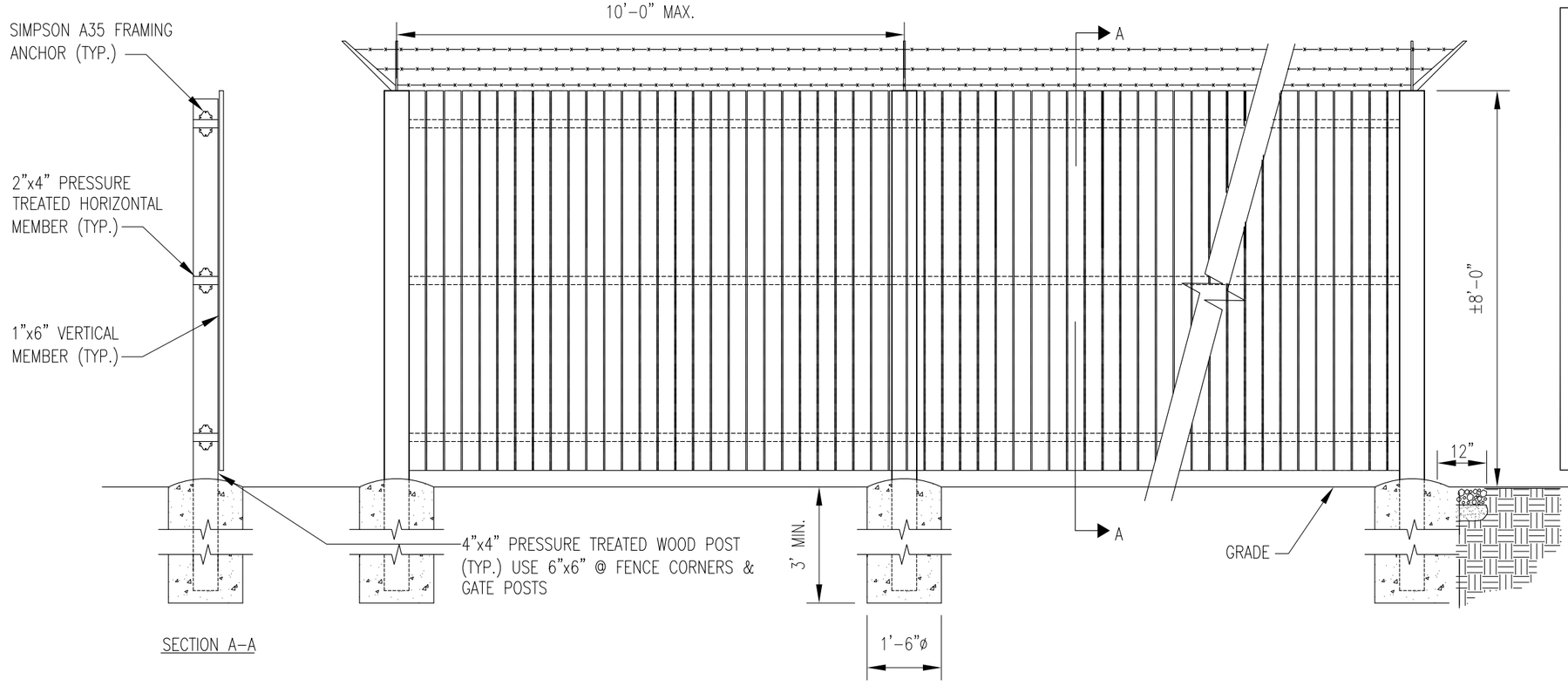

APPROVED CONSTRUCTION PLAN
NAME DATE
PLANNING _____
TRAFFIC _____
FIRE _____

AMERICAN TOWER CORPORATION
496 LONG POINT ROAD
MOUNT PLEASANT, SC 29464
TEL.: (843) 971-8385
FAX: (843) 971-8889

THESE DRAWINGS AND/OR THE ACCOMPANYING SPECIFICATION AS INSTRUMENTS OF SERVICE, ARE THE EXCLUSIVE PROPERTY OF AMERICAN TOWER CORPORATION AND THEIR USE AND PUBLICATION SHALL BE RESTRICTED TO THE ORIGINAL SITE FOR WHICH THEY ARE PREPARED. REUSE, REPRODUCTION OR PUBLICATION BY ANY METHOD, IN WHOLE OR IN PART, IS PROHIBITED EXCEPT BY WRITTEN PERMISSION FROM AMERICAN TOWER CORPORATION TITLE TO THESE PLANS AND/OR SPECIFICATIONS SHALL REMAIN WITH AMERICAN TOWER CORPORATION WITHOUT PREJUDICE AND VISUAL CONTACT WITH THEM SHALL CONSTITUTE PRIMA FACIE EVIDENCE OF ACCEPTANCE OF THESE RESTRICTIONS.

BC architects engineers
5661 COLUMBIA PIKE, SUITE 200
FALLS CHURCH, VA 22041-2868
TEL: (703) 671-6000
FAX: (703) 671-6300

SHEET REVISION

NO.	DESCRIPTION	BY	DATE
1	CITY CHGS.	DS	06-24-14
2			
3			
4			
5			
6			

ATC SITE NUMBER:
275164
ATC SITE NAME:
MAC RAE PARK NC
SITE ADDRESS:
4417 LAKE AVE.
WILMINGTON, NC 28409

STAMP HERE:
NORTH CAROLINA PROFESSIONAL SEAL 0024902 ENGINEER CHRISTOPHER D. MORIN
9.15.14

DRAWN BY:	AGT
CHECKED BY:	DRS
DATE DRAWN:	03-24-14
SUBMISSION:	FINAL CD'S

SHEET TITLE:
WOOD FENCE DETAILS

SHEET NUMBER: 1 A-8
REV. # 1

N.T.S. | WOOD FENCE DETAILS | 1

02-11-14 VICTOR GARCIA 10:36:04 Y:/Drawings – 2013/ATC/Mac Rae Park NC – 275164/_CD's_2014.02.10/A8.dwg

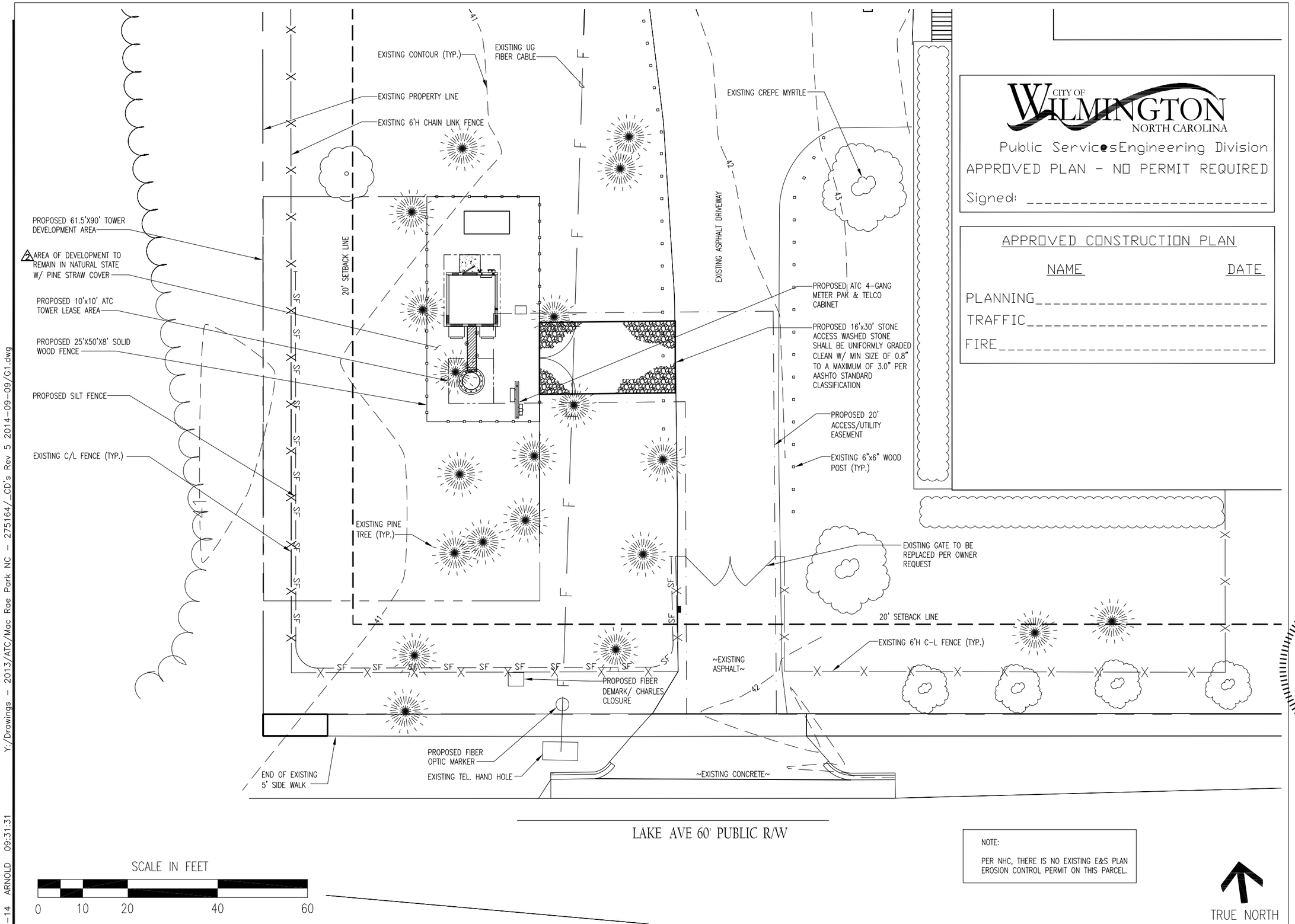

CITY OF WILMINGTON NORTH CAROLINA
Public Services Engineering Division
APPROVED PLAN - NO PERMIT REQUIRED
Signed: _____

APPROVED CONSTRUCTION PLAN

	NAME	DATE
PLANNING		
TRAFFIC		
FIRE		

NOTE:

PER NHC, THERE IS NO EXISTING E&S PLAN EROSION CONTROL PERMIT ON THIS PARCEL.

AMERICAN TOWER CORPORATION
496 LONG POINT ROAD
MOUNT PLEASANT, SC 29464
TEL.: (843) 971-8385
FAX: (843) 971-8889

THESE DRAWINGS AND/OR THE ACCOMPANYING SPECIFICATION AS INSTRUMENTS OF SERVICE, ARE THE EXCLUSIVE PROPERTY OF AMERICAN TOWER CORPORATION AND THEIR USE AND PUBLICATION SHALL BE RESTRICTED TO THE ORIGINAL SITE FOR WHICH THEY ARE PREPARED. REUSE, REPRODUCTION OR PUBLICATION BY ANY METHOD, IN WHOLE OR IN PART, IS PROHIBITED EXCEPT BY WRITTEN PERMISSION FROM AMERICAN TOWER CORPORATION TITLE TO THESE PLANS AND/OR SPECIFICATIONS SHALL REMAIN WITH AMERICAN TOWER CORPORATION WITHOUT PREJUDICE AND VISUAL CONTACT WITH THEM SHALL CONSTITUTE PRIMA FACIE EVIDENCE OF ACCEPTANCE OF THESE RESTRICTIONS.

BC architects engineers
5661 COLUMBIA PIKE, SUITE 200
FALLS CHURCH, VA 22041-2868
TEL: (703) 671-6000
FAX: (703) 671-6300

SHEET REVISION

NO.	DESCRIPTION	BY	DATE
1	NEW SHEET	AGT	04-24-14
2	CORRECT TITLE	DS	06-24-14
3	CITY COMMENTS	AGT	09-15-14
4			
5			
6			

ATC SITE NUMBER:
275164
ATC SITE NAME:
MAC RAE PARK NC
SITE ADDRESS:
4417 LAKE AVE.
WILMINGTON, NC 28409

STAMP HERE:
NORTH CAROLINA PROFESSIONAL SEAL 0024902 ENGINEER CHRISTOPHER D. MORIN
9.15.14

DRAWN BY:	AGT
CHECKED BY:	DRS
DATE DRAWN:	03-24-14
SUBMISSION:	FINAL CD'S

SHEET TITLE:
EROSION AND SEDIMENT CONTROL PLAN

SHEET NUMBER: G-1 REV. # 3

11"x17" - 1"=20'
24"x36" - 1"=10'

EROSION & SEDIMENT CONTROL PLAN

1

09-15-14 ARNOLD 09:31:31 Y:/Drawings - 2013/ATC/Mac Rae Park NC - 275164/_CD's Rev 5 2014-09-09/G1.dwg

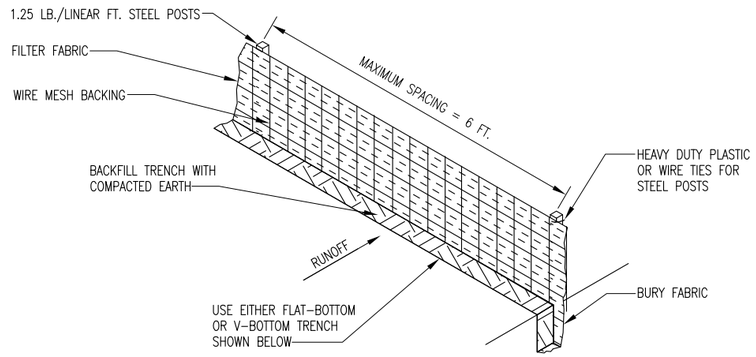

SILT FENCE INSTALLATION

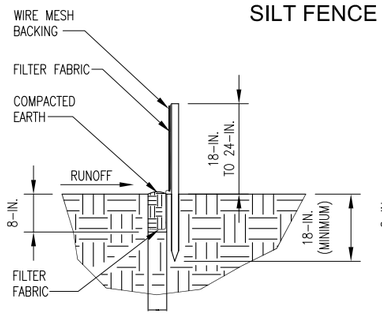

FLAT-BOTTOM TRENCH DETAIL

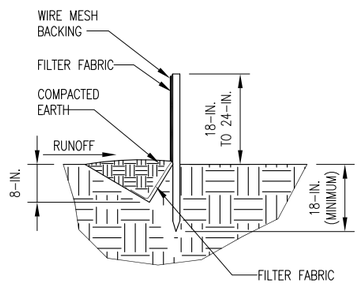

V-SHAPED TRENCH DETAIL

SILT FENCE DETAIL

WHEN AND WHERE TO USE IT

SILT FENCE IS APPLICABLE IN AREAS:

WHERE THE MAXIMUM SHEET OR OVERLAND FLOW PATH LENGTH TO THE FENCE IS 100-FEET.
WHERE THE MAXIMUM SLOPE STEEPNESS (NORMAL [PERPENDICULAR] TO FENCE LINE) IS 2H:1V.
THAT DO NOT RECEIVE CONCENTRATED FLOWS GREATER THAN 0.5 CFS.

DO NOT PLACE SILT FENCE ACROSS CHANNELS OR USE IT AS A VELOCITY CONTROL BMP.

MATERIALS

STEEL POSTS
USE 48-INCH LONG STEEL POSTS THAT MEET THE FOLLOWING MINIMUM PHYSICAL REQUIREMENTS:
COMPOSED OF HIGH STRENGTH STEEL WITH MINIMUM YIELD STRENGTH OF 50,000 PSI.
HAVE A STANDARD "T" SECTION WITH A NOMINAL FACE WIDTH OF 1.38-INCHES AND NOMINAL "T" LENGTH OF 1.48-INCHES.
WEIGH 1.25 POUNDS PER FOOT (± 8%).
HAVE A SOIL STABILIZATION PLATE WITH A MINIMUM CROSS SECTION AREA OF 17-SQUARE INCHES ATTACHED TO THE STEEL POSTS.
PAINTED WITH A WATER BASED BAKED ENAMEL PAINT.

USE STEEL POSTS WITH A MINIMUM LENGTH OF 4-FEET, WEIGHING 1.25 POUNDS PER LINEAR FOOT (± 8%) WITH PROJECTIONS TO
AID IN FASTENING THE FABRIC. EXCEPT WHEN HEAVY CLAY SOILS ARE PRESENT ON SITE, STEEL POSTS WILL HAVE A METAL SOIL
STABILIZATION PLATE WELDED NEAR THE BOTTOM SUCH THAT WHEN THE POST IS DRIVEN TO THE PROPER DEPTH, THE PLATE WILL BE BELOW THE GROUND LEVEL FOR ADDED STABILITY.
THE SOIL PLATES SHOULD HAVE THE FOLLOWING CHARACTERISTICS:
BE COMPOSED OF MINIMUM 15 GAUGE STEEL.
HAVE A MINIMUM CROSS SECTION AREA OF 17-SQUARE INCHES.

STEEL WIRE MESH
BACK THE FABRIC WITH A WIRE MESH OF 32" MINIMUM WIDTH, AND SHALL HAVE A MINIMUM OF 6 LINE WIRES WITH 12" STAY SPACING.
TOP AND BOTTOM STRANDS SHALL BE MINIMUM #10 GAUGE WITH #12 1/2 GAUGE STAY WIRES.

GEOTEXTILE FILTER FABRIC
FILTER FABRIC IS:
COMPOSED OF FIBERS CONSISTING OF LONG CHAIN SYNTHETIC POLYMERS COMPOSED OF AT LEAST 85% BY WEIGHT OF
POLYOLEFINS, POLYESTERS, OR POLYAMIDES. FORMED INTO A NETWORK SUCH THAT THE FILAMENTS OR YARNS RETAIN
DIMENSIONAL STABILITY RELATIVE TO EACH OTHER. FREE OF ANY TREATMENT OR COATING WHICH MIGHT ADVERSELY ALTER
ITS PHYSICAL PROPERTIES AFTER INSTALLATION. FREE OF DEFECTS OR FLAWS THAT SIGNIFICANTLY AFFECT ITS PHYSICAL
AND/OR FILTERING PROPERTIES. CUT TO A MINIMUM WIDTH OF 36 INCHES.

USE ONLY FABRIC MEETING THE REQUIREMENTS OF THE MOST CURRENT EDITION
OF THE NCDOT STANDARD SPECIFICATIONS FOR HIGHWAY CONSTRUCTION.

SILT FENCE DETAIL

INSTALLATION

EXCAVATE A TRENCH APPROXIMATELY 6-INCHES WIDE AND 6-INCHES DEEP WHEN PLACING FABRIC BY HAND. PLACE 12-INCHES OF GEOTEXTILE FABRIC INTO THE 6-INCH DEEP TRENCH, EXTENDING THE REMAINING 6-INCHES TOWARDS THE UPSLOPE SIDE OF THE TRENCH. BACKFILL THE TRENCH WITH SOIL OR GRAVEL AND COMPACT.BURY 12-INCHES OF FABRIC INTO THE GROUND WHEN PNEUMATICALLY INSTALLING SILT FENCE WITH A SLICING METHOD. PURCHASE FABRIC IN CONTINUOUS ROLLS AND CUT TO THE LENGTH OF THE BARRIER TO AVOID JOINTS. WHEN JOINTS ARE NECESSARY, WRAPPED THE FABRIC TOGETHER AT A SUPPORT POST WITH BOTH ENDS FASTENED TO THE POST, WITH A 6-INCH MINIMUM OVERLAP. INSTALL POSTS TO A MINIMUM DEPTH OF 24-INCHES. INSTALL POSTS A MINIMUM OF 1- TO 2- INCHES ABOVE THE FABRIC, WITH NO MORE THAN 3-FEET OF THE POST ABOVE THE GROUND. SPACE POSTS TO MAXIMUM 6-FEET CENTERS. ATTACH FABRIC TO WOOD POSTS USING STAPLES MADE OF HEAVY-DUTY WIRE AT LEAST 1½-INCH LONG, SPACED A MAXIMUM OF 6-INCHES APART. STAPLE A 2-INCH WIDE LATHE OVER THE FILTER FABRIC TO SECURELY FASTEN IT TO THE UPSLOPE SIDE OF WOODEN POSTS. ATTACH FABRIC TO THE STEEL POSTS USING HEAVY-DUTY PLASTIC TIES THAT ARE EVENLY SPACED AND PLACED IN A MANNER TO PREVENT SAGGING OR TEARING OF THE FABRIC. IN CALL CASES, TIES SHOULD BE AFFIXED IN NO LESS THAN 4 PLACES. INSTALL THE FABRIC A MINIMUM OF 24-INCHES ABOVE THE GROUND. WHEN NECESSARY, THE HEIGHT OF THE FENCE ABOVE GROUND MAY BE GREATER THAN 24-INCHES. IN TIDAL AREAS, EXTRA SILT FENCE HEIGHT MAY BE REQUIRED. THE POST HEIGHT WILL BE TWICE THE EXPOSED POST HEIGHT. POST SPACING WILLREMAIN THE SAME AND EXTRA HEIGHT FABRIC WILL BE 4-, 5-, OR 6-FEET TALL. LOCATE SILT FENCE CHECKS EVERY 100 FEET MAXIMUM AND AT LOW POINTS. INSTALL THE FENCE PERPENDICULAR TO THE DIRECTION OF FLOW AND PLACE THE FENCE THE PROPER DISTANCE FROM THE TOE OF STEEP SLOPES TO PROVIDE SEDIMENT STORAGE AND ACCESS FOR MAINTENANCE AND CLEANOUT.

INSPECTION AND MAINTENANCE

INSPECT EVERY SEVEN CALENDAR DAYS AND WITHIN 24-HOURS AFTER EACH RAINFALL EVENT THAT PRODUCES ½-INCHES OR MORE OF PRECIPITATION. CHECK FOR SEDIMENT BUILDUP AND FENCE INTEGRITY. CHECK WHERE RUNOFF HAS ERODED A CHANNEL BENEATH THE FENCE, OR WHERE THE FENCE HAS SAGGED OR COLLAPSED BY FENCE OVERTOPPING. IF THE FENCE FABRIC TEARS, BEGINS TO DECOMPOSE, OR IN ANY WAY BECOMES INEFFECTIVE, REPLACE THE SECTION OF FENCE IMMEDIATELY.
REMOVE SEDIMENT ACCUMULATED ALONG THE FENCE WHEN IT REACHES 1/3 THE HEIGHT OF THE FENCE, ESPECIALLY IF HEAVY RAINS ARE EXPECTED. REMOVE TRAPPED SEDIMENT FROM THE SITE OR STABILIZE IT ON SITE. REMOVE SILT FENCE WITHIN 30 DAYS AFTER FINAL STABILIZATION IS ACHIEVED OR AFTER TEMPORARY BEST MANAGEMENT PRACTICES (BMPS) ARE NO LONGER NEEDED. PERMANENTLY STABILIZE DISTURBED AREAS RESULTING FROM FENCE REMOVAL.

N.T.S. | SILT FENCE DETAILS & NOTES | 1

CITY OF WILMINGTON NORTH CAROLINA
Public Services Engineering Division
APPROVED PLAN - NO PERMIT REQUIRED
Signed: _____

APPROVED CONSTRUCTION PLAN

	NAME	DATE
PLANNING		
TRAFFIC		
FIRE		

CONSTRUCTION SEQUENCE

ITEMS MUST OCCUR IN THE ORDER LISTED; ITEMS CANNOT OCCUR CONCURRENTLY UNLESS SPECIFICALLY NOTED.

1. PICK UP PERMIT FROM CITY OF WILMINGTON.
2. CONTACT CITY OF WILMINGTON TO SCHEDULE PRE-CONSTRUCTION MEETING.
3. PRE-CONSTRUCTION MEETING (ON-SITE).
4. INSTALLATION OF CONSTRUCTION ENTRANCE(S)
5. CLEARING AND GRUBBING ONLY AS NECESSARY FOR INSTALLATION OF PERIMETER CONTROLS
6. INSTALLATION OF PERIMETER CONTROLS (E.G., SILT FENCE)
7. CLEARING AND GRUBBING ONLY IN AREAS OF CULVERTS AND OTHER SEDIMENTATION CONTROL DEVICES.
8. INSTALLATION OF CULVERTS (OUTLET STRUCTURES MUST BE COMPLETELY INSTALLED AS SHOWN ON THE DETAILS BEFORE PROCEEDING TO NEXT STEP; AREAS DRAINING TO THESE STRUCTURES CANNOT BE DISTURBED UNTIL THE STRUCTURES AND DIVERSIONS TO THE STRUCTURES ARE COMPLETELY INSTALLED)
9. CLEARING AND GRUBBING OF SITE OR DEMOLITION (SEDIMENT AND EROSION CONTROL MEASURES FOR THESE AREAS MUST ALREADY BE INSTALLED)
10. ROUGH GRADING, & INSTALLATION OF COMPOUND/TOWER/FENCING/UTILITIES AND LANDSCAPING.
11. FINE GRADING, PAVING, ETC.
12. PERMANENT/FINAL STABILIZATION OF DISTURBED AREA.
13. REMOVAL OF TEMPORARY SEDIMENT AND EROSION CONTROL MEASURES AFTER ENTIRE AREA DRAINING TO THE STRUCTURE IS FINALLY STABILIZED (THE COUNTY WILL DETERMINE WHEN TO REMOVE ALL TEMPORARY STRUCTURES.)
15. SUBMIT NOTICE OF TERMINATION TO SPARTANBURG COUNTY AS APPROPRIATE.

NOTE:

IF FLOWS FROM OFFSITE AREAS WILL BE DIVERTED AROUND THE SITE AND THE ON-SITE STRUCTURES ARE NOTE DESIGNED TO HANDLE FLOWS FROM THE OFFSITE AREAS, THEN THE DIVERSIONS/PIPING FOR THE OFFSITE FLOWS MUST BE INSTALLED BEFORE LAND-DISTURBING ACTIVITIES BEGIN ON THE SITE; INCLUDE THIS IN THE SEQUENCE. SEDIMENT AND EROSION CONTROL MEASURES FOR THE DISTURBED AREAS FOR THE DIVERSION/PIPING MUST BE INSTALLED BEFORE THOSE AREAS ARE DISTURBED AND SHOULD BE SHOWN ON THE PLANS.

NOTE:

IF AN EXISTING DETENTION/SEDIMENT BASIN IS BEING MODIFIED TO HANDLE THE FLOWS FROM THE PROPOSED DEVELOPMENT, THEN IT MUST BE MODIFIED BEFORE LAND-DISTURBING ACTIVITIES BEGIN ON THE SITE. THIS SHOULD BE INCLUDED IN THE SEQUENCE.

NOTE:

INSTALLATION OF SOME PERMANENT WATER QUALITY DEVICES SHOULD OCCUR AFTER THE SITE IS STABILIZED; INCLUDE THIS IN THE SEQUENCE. CLEANOUT OF OTHER WATER QUALITY DEVICES THAT WERE USED DURING CONSTRUCTION SHOULD OCCUR AFTER SITE STABILIZATION.

NOTE:

MAINTENANCE OF SEDIMENT AND EROSION CONTROL MEASURES MUST CONTINUE UNTIL THE SITE IS PERMANENTLY STABILIZED AND THE CONTROLS ARE REMOVED.

CONSTRUCTION SEQUENCE | 2

AMERICAN TOWER CORPORATION
496 LONG POINT ROAD
MOUNT PLEASANT, SC 29464
TEL.: (843) 971-8385
FAX: (843) 971-8889

THESE DRAWINGS AND/OR THE ACCOMPANYING SPECIFICATION AS INSTRUMENTS OF SERVICE, ARE THE EXCLUSIVE PROPERTY OF AMERICAN TOWER CORPORATION AND THEIR USE AND PUBLICATION SHALL BE RESTRICTED TO THE ORIGINAL SITE FOR WHICH THEY ARE PREPARED. REUSE, REPRODUCTION OR PUBLICATION BY ANY METHOD, IN WHOLE OR IN PART, IS PROHIBITED EXCEPT BY WRITTEN PERMISSION FROM AMERICAN TOWER CORPORATION TITLE TO THESE PLANS AND/OR SPECIFICATIONS SHALL REMAIN WITH AMERICAN TOWER CORPORATION WITHOUT PREJUDICE AND VISUAL CONTACT WITH THEM SHALL CONSTITUTE PRIMA FACIE EVIDENCE OF ACCEPTANCE OF THESE RESTRICTIONS.

BC architects engineers
5661 COLUMBIA PIKE, SUITE 200
FALLS CHURCH, VA 22041-2868
TEL: (703) 671-6000
FAX: (703) 671-6300

SHEET REVISION

NO.	DESCRIPTION	BY	DATE
1	NEW SHEET	AGT	04-24-14
2	CITY COMMENTS	DS	06-24-14
3			
4			
5			
6			

ATC SITE NUMBER:
275164
ATC SITE NAME:
MAC RAE PARK NC
SITE ADDRESS:
4417 LAKE AVE.
WILMINGTON, NC 28409

STAMP HERE:
NORTH CAROLINA PROFESSIONAL SEAL 0024902 ENGINEER CHRISTOPHER D. MORIN
9.15.14

DRAWN BY:	AGT
CHECKED BY:	DRS
DATE DRAWN:	03-24-14
SUBMISSION:	FINAL CD'S

SHEET TITLE:
SILT FENCE DETAILS & NOTES

SHEET NUMBER: G-2 | REV. # 2

04-24-14 ARNOLD 16:28:22 Y:/Drawings - 2013/ATC/Mac Rae Park NC - 275164/_CD's Rev 1 2014-04-24/G2.dwg

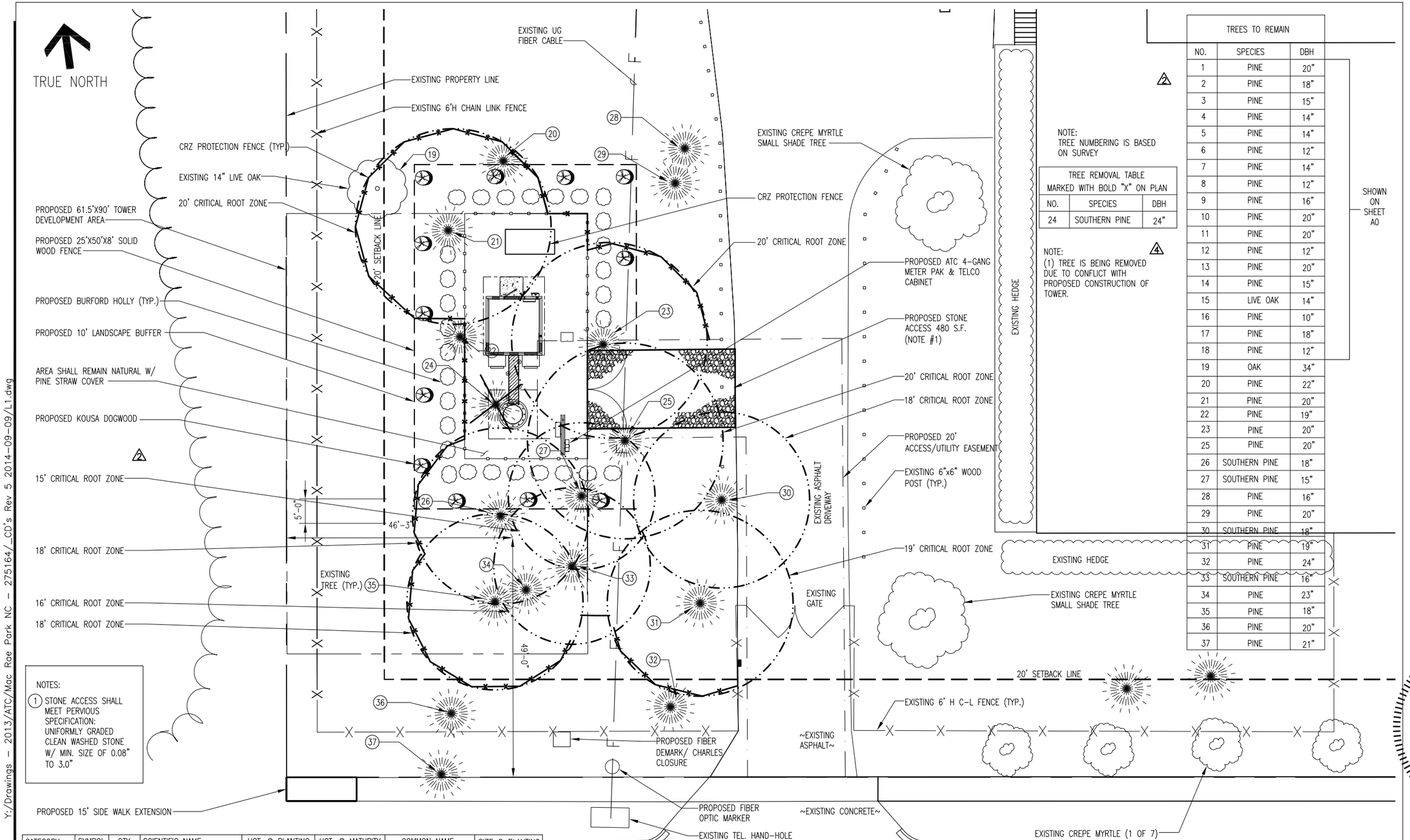

NOTES:
1. STONE ACCESS SHALL MEET PERVIOUS SPECIFICATION: UNIFORMLY GRADED CLEAN WASHED STONE W/ MIN. SIZE OF 0.08" TO 3.0"

NOTE:
TREE NUMBERING IS BASED ON SURVEY

TREE REMOVAL TABLE
MARKED WITH BOLD "X" ON PLAN

NO.	SPECIES	DBH
24	SOUTHERN PINE	24"

NOTE:
(1) TREE IS BEING REMOVED DUE TO CONFLICT WITH PROPOSED CONSTRUCTION OF TOWER.

TREES TO REMAIN

NO.	SPECIES	DBH
1	PINE	20"
2	PINE	18"
3	PINE	15"
4	PINE	14"
5	PINE	14"
6	PINE	12"
7	PINE	14"
8	PINE	12"
9	PINE	16"
10	PINE	20"
11	PINE	20"
12	PINE	12"
13	PINE	20"
14	PINE	15"
15	LIVE OAK	14"
16	PINE	10"
17	PINE	18"
18	PINE	12"
19	OAK	34"
20	PINE	22"
21	PINE	20"
22	PINE	19"
23	PINE	20"
25	PINE	20"
26	SOUTHERN PINE	18"
27	SOUTHERN PINE	15"
28	PINE	16"
29	PINE	20"
30	SOUTHERN PINE	18"
31	PINE	19"
32	PINE	24"
33	SOUTHERN PINE	16"
34	PINE	23"
35	PINE	18"
36	PINE	20"
37	PINE	21"

SHOWN ON SHEET A0

CATEGORY	SYMBOL	QTY.	SCIENTIFIC NAME	HGT. @ PLANTING	HGT. @ MATURITY	COMMON NAME	SIZE @ PLANTING
SHRUBS		29	ILEX CORNUTA	3'-0"	6-10 FT.	BURFORD HOLLY	5 GAL.
SMALL SHADE TREE		12	CORNUS KOUSA CHINESIS	6'-0"	20-30 FT.	KOUSA DOGWOOD	2.5" CALIPER
LARGE SHADE TREES		34	PINUS PALUSTRIS	N/A	N/A	EXISTING PINES	

STREETYARD CALCULATIONS:
1. PRIMARY: NO PROPOSED LANDSCAPING IS REQUIRED ALONG COLLEGE RD.
2. SECONDARY: 340' FRONTAGE X 4.5'=1530 S.F.
1530 S.F./600=2.5 (3 CANOPY TREES & 18 SHRUBS REQUIRED)

CITY OF WILMINGTON NORTH CAROLINA
Public Services Engineering Division
APPROVED PLAN - NO PERMIT REQUIRED
Signed: _____

APPROVED CONSTRUCTION PLAN
NAME DATE
PLANNING_____
TRAFFIC_____
FIRE_____

11"x17" - 1"=20'
24"x36" - 1"=10'

TREE REMOVAL & LANDSCAPE PLAN

1

AMERICAN TOWER CORPORATION
496 LONG POINT ROAD
MOUNT PLEASANT, SC 29464
TEL.: (843) 971-8385
FAX: (843) 971-8889

THESE DRAWINGS AND/OR THE ACCOMPANYING SPECIFICATION AS INSTRUMENTS OF SERVICE, ARE THE EXCLUSIVE PROPERTY OF AMERICAN TOWER CORPORATION AND THEIR USE AND PUBLICATION SHALL BE RESTRICTED TO THE ORIGINAL SITE FOR WHICH THEY ARE PREPARED. REUSE, REPRODUCTION OR PUBLICATION BY ANY METHOD, IN WHOLE OR IN PART, IS PROHIBITED EXCEPT BY WRITTEN PERMISSION FROM AMERICAN TOWER CORPORATION TITLE TO THESE PLANS AND/OR SPECIFICATIONS SHALL REMAIN WITH AMERICAN TOWER CORPORATION WITHOUT PREJUDICE AND VISUAL CONTACT WITH THEM SHALL CONSTITUTE PRIMA FACIE EVIDENCE OF ACCEPTANCE OF THESE RESTRICTIONS.

BC architects engineers
5661 COLUMBIA PIKE, SUITE 200
FALLS CHURCH, VA 22041-2868
TEL: (703) 671-6000
FAX: (703) 671-6300

SHEET REVISION

NO.	DESCRIPTION	BY	DATE
1	CITY CHGS.	AGT	04-24-14
2	CITY CHANGES	DS	06-24-14
3	CITY CHANGES	AGT	06-26-14
4	STREETYARD CALC.	DS	08-01-14
5	CITY COMMENTS	AGT	09-15-14
6			

ATC SITE NUMBER:
275164
ATC SITE NAME:
MAC RAE PARK NC
SITE ADDRESS:
4417 LAKE AVE.
WILMINGTON, NC 28409

STAMP HERE:
NORTH CAROLINA PROFESSIONAL SEAL 0024902 ENGINEER CHRISTOPHER D. MORIN
9.15.14

DRAWN BY:	AGT
CHECKED BY:	DRS
DATE DRAWN:	03-24-14
SUBMISSION:	FINAL CD'S

SHEET TITLE:
TREE REMOVAL & LANDSCAPE PLAN

SHEET NUMBER: L-1
REV. # 5

Y:/Drawings - 2013/ATC/Mac Rae Park NC - 275164/_CD's Rev 5 2014-09-09/L1.dwg
09-15-14 ARNOLD 09:32:01

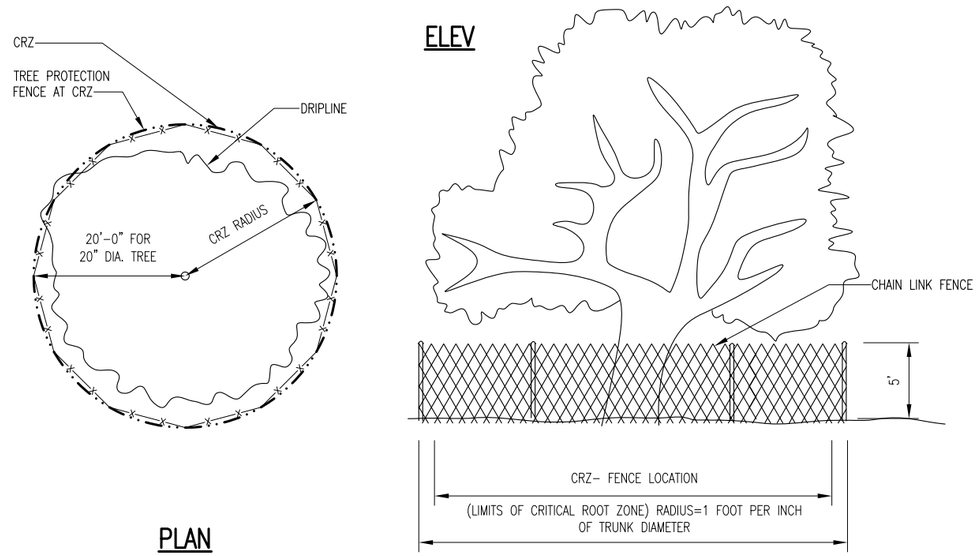

N.T.S. | TREE PROTECTION FENCING DETAIL (GENERAL) | 1

THIS DETAIL TO BE USED ONLY IF PROTECTED TREE IS IN CLOSE PROXIMITY TO COMPOUND

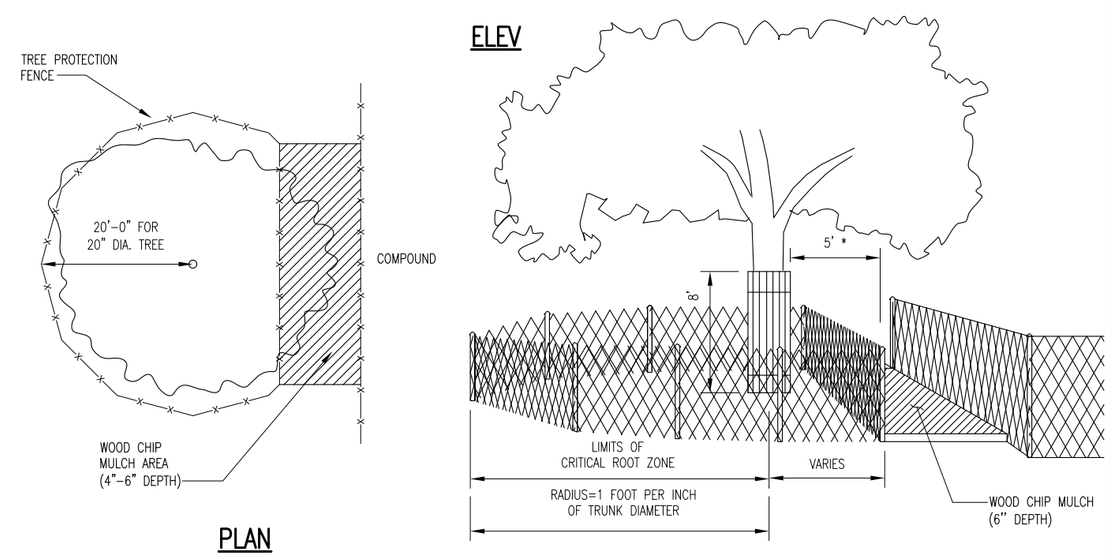

N.T.S. | TREE PROTECTION FENCING DETAIL (NEAR COMPOUND) | 2

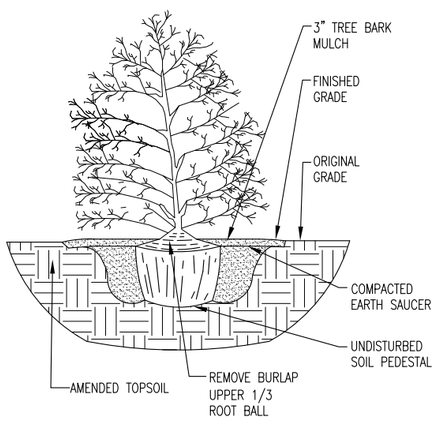

N.T.S. | SHRUB PLANTING DETAIL | 3

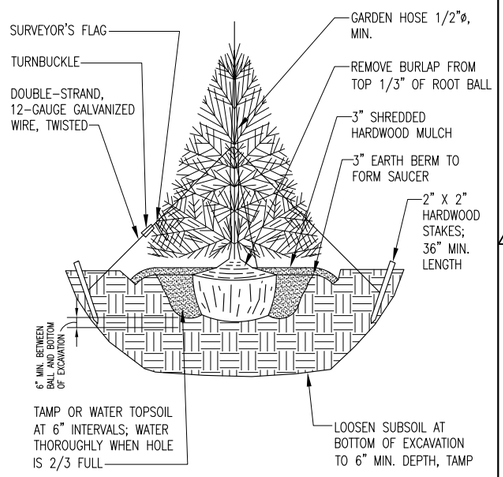

NOTE(S):

1. DECIDUOUS TREE SHALL BE 3' IN HEIGHT AT TIME OF PLANTING.
2. SPECIES OF TREE SHALL BE CREPE MYRTLE.

N.T.S. | TREE PLANTING DETAIL | 4

NOTES:

1. EXISTING TREES AND PLANTS ARE BEING USED TO MEET LANDSCAPE CODE REQUIREMENTS. IF ANY TREES DIE OR ARE REMOVED THEY WILL BE REPLACED AS PER THE LANDSCAPE CODE REQUIREMENTS.
2. ALL PLANT MATERIAL LOCATED WITHIN THE CONSTRUCTION AREA THAT IS DAMAGED OR REMOVED DUE TO WORK REQUIRED BY THE UTILITY COMPANY SHALL BE IMMEDIATELY REPLACED BY THE OWNER IN ACCORDANCE WITH LANDSCAPE CODE REQUIREMENTS.
3. GRASS OR GROUND COVER SHALL BE PLANTED ON ALL PORTIONS OF THE LANDSCAPE BUFFER AREA NOT OCCUPIED BY OTHER LANDSCAPE MATERIAL.
4. ALL UNHEALTHY OR DEAD PLANT MATERIAL SHALL BE REPLACED WITHIN ONE YEAR, OR BY THE NEXT PLANTING PERIOD, WHICHEVER COMES FIRST, WHILE OTHER DEFECTIVE PLANT MATERIAL SHALL BE REPLACED OR REPAIRED WITHIN THREE (3) MONTHS.
5. DIMENSION LINES HAVE BEEN USED ON THIS PLAN TO ESTABLISH THE GENERAL LOCATION OF TREE CANOPY PROTECTION AREA (TCPAs) AND REPRESENT MINIMUM DISTANCES. THE FINAL BOUNDARY FOR EACH TCPA SHALL BE ESTABLISHED IN THE FIELD TO INCLUDE CANOPY AREA OF ALL TREES AT OR WITHIN THE DIMENSION LINE.
6. TREE PROTECTION FENCING SHALL BE ERECTED ADJACENT TO ALL TCPAs PRIOR TO SITE DISTURBANCE APPROVAL TO PROTECT THE EXISTING TREE STANDS AND THEIR ROOT SYSTEMS. THE FENCING SHALL BE LOCATED AT THE CRITICAL ROOT ZONE RADIUS AND SHALL REMAIN IN PLACE UNTIL ALL CONSTRUCTION IS COMPLETED.
7. DURING ALL CONSTRUCTION ACTIVITY (INCLUDES CLEARING, GRADING, BUILDING CONSTRUCTION, AND UTILITY CONSTRUCTION) A COPY OF THE APPROVED TREE PRESERVATION PLAN SHALL BE ON-SITE.
8. SIGNAGE IS REQUIRED ON TREE PROTECTION FENCING. SIINAGE SHALL READ: " TREE PROTECTION AREA: DO NOT ENTER" . SIGNS SHALL BE WRITTEN IN BOTH ENGLISH AND SPANISH.
9. SINGS SHALL BE SPACED AT 50 FT. INTERVALS WITH AT LEAST 2 SIGNS PER TREE PROTECTION AREA.

CITY OF WILMINGTON NORTH CAROLINA
Public Services Engineering Division
APPROVED PLAN - NO PERMIT REQUIRED
Signed: _____

APPROVED CONSTRUCTION PLAN

NAME	DATE
PLANNING	
TRAFFIC	
FIRE	

LANDSCAPING NOTES | 5

AMERICAN TOWER® CORPORATION
496 LONG POINT ROAD
MOUNT PLEASANT, SC 29464
TEL.: (843) 971-8385
FAX: (843) 971-8889

THESE DRAWINGS AND/OR THE ACCOMPANYING SPECIFICATION AS INSTRUMENTS OF SERVICE, ARE THE EXCLUSIVE PROPERTY OF AMERICAN TOWER CORPORATION AND THEIR USE AND PUBLICATION SHALL BE RESTRICTED TO THE ORIGINAL SITE FOR WHICH THEY ARE PREPARED. REUSE, REPRODUCTION OR PUBLICATION BY ANY METHOD, IN WHOLE OR IN PART, IS PROHIBITED EXCEPT BY WRITTEN PERMISSION FROM AMERICAN TOWER CORPORATION TITLE TO THESE PLANS AND/OR SPECIFICATIONS SHALL REMAIN WITH AMERICAN TOWER CORPORATION WITHOUT PREJUDICE AND VISUAL CONTACT WITH THEM SHALL CONSTITUTE PRIMA FACIE EVIDENCE OF ACCEPTANCE OF THESE RESTRICTIONS.

BC architects engineers
5661 COLUMBIA PIKE, SUITE 200
FALLS CHURCH, VA 22041-2868
TEL: (703) 671-6000
FAX: (703) 671-6300

SHEET REVISION

NO.	DESCRIPTION	BY	DATE
1	NEW SHEET	AGT	04-24-14
2	CITY COMMENTS	AGT	06-24-14
3	CITY CHANGES	AGT	06-26-14
4			
5			
6			

ATC SITE NUMBER:
275164
ATC SITE NAME:
MAC RAE PARK NC
SITE ADDRESS:
4417 LAKE AVE.
WILMINGTON, NC 28409

STAMP HERE:
NORTH CAROLINA PROFESSIONAL SEAL 0024902 ENGINEER CHRISTOPHER D. MORIN
9.15.14

DRAWN BY:	AGT
CHECKED BY:	DRS
DATE DRAWN:	03-24-14
SUBMISSION:	FINAL CD'S

SHEET TITLE:
LANDSCAPING NOTES & PROTECTION DETAILS

SHEET NUMBER: L-2 | REV. #: 3

06-26-14 ARNOLD 13:19:37 Y:/Drawings - 2013/ATC/Mac Rae Park NC - 275164/_CD's Rev 3 2014-06-26/L2.dwg

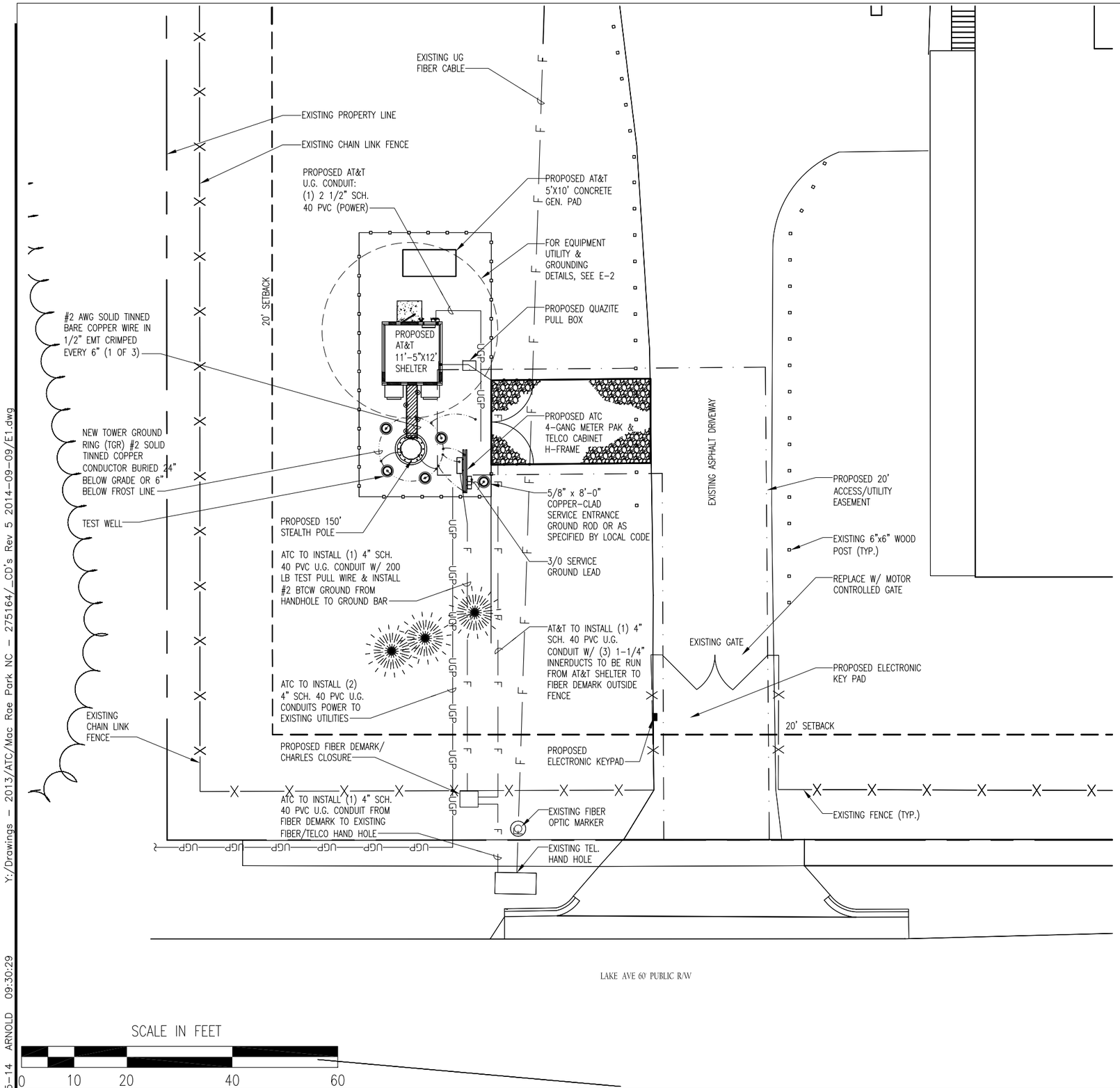

ELECTRICAL LEGEND

— — — — — — — — — — — —	UNDERGROUND CONDUIT
— · — · — · —	GROUND CABLE RUN BELOW GRADE
⊙	5/8"øx8'-0" COPPER CLAD, STEEL GROUND ROD.
— · — ⊙ — · —	EXOTHERMIC CONNECTION OF GROUND CABLE TO GROUND ROD
— · — · — · —	SUBGRADE GROUNDING CABLE TO CABLE CONNECTION USING EXOTHERMIC PROCESS.
⊚	ATC GROUND ROD TEST WELL

1. THE CONTRACTOR SHALL NOTIFY THE CONSTRUCTION MANAGER WHEN THE GROUNDING SYSTEM IS COMPLETE. THE CONSTRUCTION MANAGER SHALL INSPECT THE GROUNDING SYSTEM PRIOR TO BACKFILLING.
2. MAXIMUM SPACING BETWEEN GROUND RODS 10'-0".
3. VERIFY THE LOCATION OF ALL UNDERGROUND UTILITIES PRIOR TO ANY DIGGING.
4. GROUND CONDUCTOR BENDS SHALL NOT BE LESS THAN 8" RADIUS.
5. CADWELD GROUND WIRE TO CABLE SUPPORT STRUCTURE.
6. G.C. SHALL PROVIDE PVC CAP ON ALL OPEN CONDUITS & PULLSTRINGS.
7. G.C. SHALL CONDUCT POST CONSTRUCTION RESISTANCE TESTING TO INSURE SYSTEM IS 5 OHM OR LESS.
8. IF POWER & FIBER CONDUIT ARE PLACED IN THE SAME TRENCH, PER NEC CODE, A MINIMUM OF 12" SEPARATION IS REQUIRED BETWEEN THE POWER & FIBER CONDUIT.
9. SWEEPING 90'S TO BE INSTALLED AT ALL TURNS & BENDS (NO HARD 90'S).
10. PULL BOX SHALL BE INSTALLED EVERY 500' OR 3RD 90° TURN.
11. CONDUIT TO BE PLACED IN UTILITY EASEMENT AND/OR ATC LEASE AREA.

CITY OF WILMINGTON NORTH CAROLINA
Public Services Engineering Division
APPROVED PLAN - NO PERMIT REQUIRED
Signed: _____

APPROVED CONSTRUCTION PLAN

	NAME	DATE
PLANNING		
TRAFFIC		
FIRE		

AMERICAN TOWER® CORPORATION
496 LONG POINT ROAD
MOUNT PLEASANT, SC 29464
TEL.: (843) 971-8385
FAX: (843) 971-8889

THESE DRAWINGS AND/OR THE ACCOMPANYING SPECIFICATION AS INSTRUMENTS OF SERVICE, ARE THE EXCLUSIVE PROPERTY OF AMERICAN TOWER CORPORATION AND THEIR USE AND PUBLICATION SHALL BE RESTRICTED TO THE ORIGINAL SITE FOR WHICH THEY ARE PREPARED. REUSE, REPRODUCTION OR PUBLICATION BY ANY METHOD, IN WHOLE OR IN PART, IS PROHIBITED EXCEPT BY WRITTEN PERMISSION FROM AMERICAN TOWER CORPORATION TITLE TO THESE PLANS AND/OR SPECIFICATIONS SHALL REMAIN WITH AMERICAN TOWER CORPORATION WITHOUT PREJUDICE AND VISUAL CONTACT WITH THEM SHALL CONSTITUTE PRIMA FACIE EVIDENCE OF ACCEPTANCE OF THESE RESTRICTIONS.

BC architects engineers
5661 COLUMBIA PIKE, SUITE 200
FALLS CHURCH, VA 22041-2868
TEL: (703) 671-6000
FAX: (703) 671-6300

SHEET REVISION

NO.	DESCRIPTION	BY	DATE
1	CITY COMMENTS	AGT	09-15-14
2			
3			
4			
5			
6			

ATC SITE NUMBER:
275164
ATC SITE NAME:
MAC RAE PARK NC
SITE ADDRESS:
4417 LAKE AVE.
WILMINGTON, NC 28409

STAMP HERE:
NORTH CAROLINA PROFESSIONAL SEAL 0024902 ENGINEER CHRISTOPHER D. MORIN
9.15.14

DRAWN BY:	AGT
CHECKED BY:	DRS
DATE DRAWN:	03-24-14
SUBMISSION:	FINAL CD'S

SHEET TITLE:
UTILITY & COMPOUND GROUNDING PLAN

SHEET NUMBER: E-1 (1)
REV. #: 1

1"=20'

UTILITY PLAN & GROUNDING PLAN

1

Y:/Drawings - 2013/ATC/Mac Rae Park NC - 275164/_CD's Rev 5 2014-09-09/E1.dwg
09-15-14 ARNOLD 09:30:29

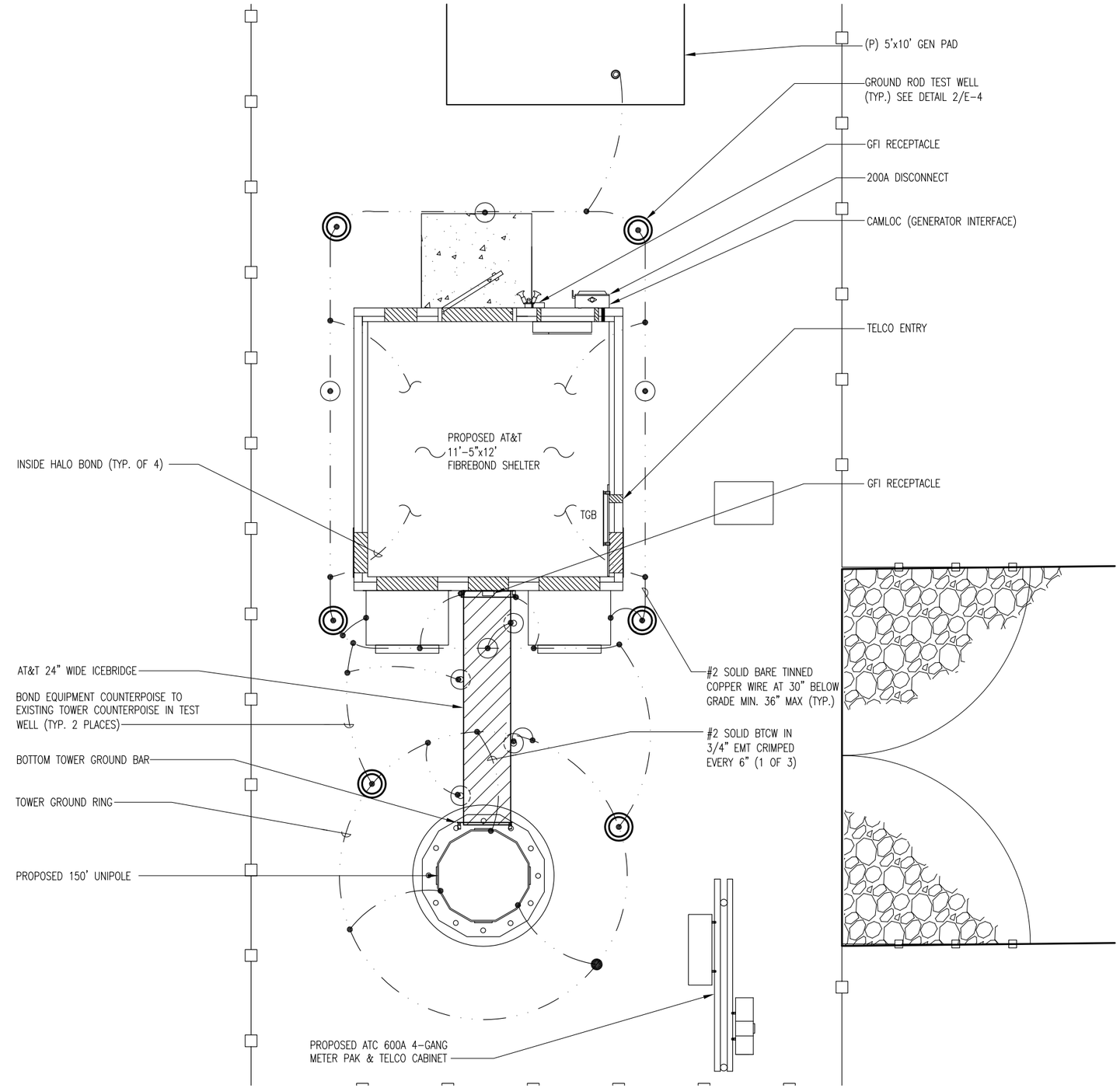

SCALE IN FEET

0 2.5 5 10 15

TRUE NORTH

NOTE:

1. G.C. SHALL PROVIDE PVC COLLAR AND MALE SCREW COVER ON ALL OPEN CONDUITS
2. EXISTING GROUNDING SYSTEM SHALL BE APPROVED BY A AT&T CONSTRUCTION REPRESENTATIVE AND/OR MODIFIED TO MEET THE TYPICAL AT&T DESIGN AS SHOWN ON THIS SHEET

CITY OF WILMINGTON NORTH CAROLINA

Public Services Engineering Division

APPROVED PLAN - NO PERMIT REQUIRED

Signed: _____

NOTES:

1. THE CONTRACTOR SHALL NOTIFY THE CONSTRUCTION MANAGER WHEN THE GROUNDING SYSTEM IS COMPLETE. THE CONSTRUCTION MANAGER SHALL INSPECT THE GROUNDING SYSTEM PRIOR TO BACKFILLING.
2. NONE OF THE EXISTING GROUND SYSTEM IS SHOWN. THE CONTRACTOR SHALL FEILD VERIFY LOCATION AND THE CONTINUITY OF THE EXISTING GROUND SYSTEM PRIOR TO BONDING TO NEW GROUND COUNTERPOISE. REPORT ANY DEFICIENCIES TO THE OWNER'S REPRESENTATIVE. DO NOT BOND TO EXISTING SYSTEM UNTIL DEFENCIENCES ARE CORRECTED AND APROVED BY OWNER'S REPRESENTATIVE.
3. MINIMUM SPACING BETWEEN GROUND RODS 10'-0".
4. VERIFY THE LOCATION OF ALL UNDERGROUND UTILITIES PRIOR TO ANY DIGGING.
5. GROUND CONDUCTOR BENDS SHALL NOT BE LESS THAN 8" RADIUS.
6. CADWELD GROUND WIRE TO CABLE SUPPORT STRUCTURE.
7. WHEN EQUIPMENT SHELTER OR TOWER COUNTERPOISE IS WITHIN THREE (3) FEET OF GATE, BOND GATE POST DIRECTLY TO COUNTERPOISE WITH #2 SOLID BARE TINNED COPPER AND OMIT GATE POST TO GATE POST GROUND WIRE.
8. ANTENNA INSTALLATION CONTRACTOR TO PROVIDE & INSTALL TOP, MIDDLE & BOTTOM RF BUSBARS, & SHELTER WALL BUSBAR (OUTSIDE) BELOW PORTS.

ELECTRICAL LEGEND

- - - - - - - - - - -	UNDERGROUND CONDUIT
—— · — · ——	GROUND CABLE RUN BELOW GRADE
⊙	5/8"ø x 8'-0" COPPER CLAD, STEEL GROUND ROD.
—— · ⊕ · ——	EXOTHERMIC CONNECTION OF GROUND CABLE TO GROUND ROD
—— · ⊕ · ——	SUBGRADE GROUNDING CABLE TO CABLE CONNECTION USING EXOTHERMIC PROCESS.
◎	GROUND ROD TEST WELL

APPROVED CONSTRUCTION PLAN

	NAME	DATE
PLANNING		
TRAFFIC		
FIRE		

AMERICAN TOWER® CORPORATION
496 LONG POINT ROAD
MOUNT PLEASANT, SC 29464
TEL.: (843) 971-8385
FAX: (843) 971-8889

THESE DRAWINGS AND/OR THE ACCOMPANYING SPECIFICATION AS INSTRUMENTS OF SERVICE, ARE THE EXCLUSIVE PROPERTY OF AMERICAN TOWER CORPORATION AND THEIR USE AND PUBLICATION SHALL BE RESTRICTED TO THE ORIGINAL SITE FOR WHICH THEY ARE PREPARED. REUSE, REPRODUCTION OR PUBLICATION BY ANY METHOD, IN WHOLE OR IN PART, IS PROHIBITED EXCEPT BY WRITTEN PERMISSION FROM AMERICAN TOWER CORPORATION TITLE TO THESE PLANS AND/OR SPECIFICATIONS SHALL REMAIN WITH AMERICAN TOWER CORPORATION WITHOUT PREJUDICE AND VISUAL CONTACT WITH THEM SHALL CONSTITUTE PRIMA FACIE EVIDENCE OF ACCEPTANCE OF THESE RESTRICTIONS.

BC architects engineers
5661 COLUMBIA PIKE, SUITE 200
FALLS CHURCH, VA 22041-2868
TEL: (703) 671-6000
FAX: (703) 671-6300

SHEET REVISION

NO.	DESCRIPTION	BY	DATE
1	CITY COMMENTS	AGT	09-15-14
2			
3			
4			
5			
6			

ATC SITE NUMBER:
275164
ATC SITE NAME:
MAC RAE PARK NC
SITE ADDRESS:
4417 LAKE AVE.
WILMINGTON, NC 28409

STAMP HERE:
NORTH CAROLINA PROFESSIONAL SEAL 0024902 ENGINEER CHRISTOPHER D. MORIN
9.15.14

DRAWN BY:	AGT
CHECKED BY:	DRS
DATE DRAWN:	03-24-14
SUBMISSION:	FINAL CD'S

SHEET TITLE:
ENLARGED GROUNDING PLAN

SHEET NUMBER: E-2 (1) REV. # 1

1"=5' | ENLARGED UTILITY & GROUNDING PLAN | 1

09-15-14 ARNOLD 09:30:46 Y:/Drawings - 2013/ATC/Mac Rae Park NC - 275164/_CD's Rev 5 2014-09-09/E2.dwg

ANTENNA AND COAXIAL CABLE SCHEDULE

ANTENNA MARK	SECTOR	ANTENNA	AZIMUTH	RAD CENTER	COAXIAL CABLE FEED LOCATION	COAX MFG	COAX LENGTH	COAXIAL CABLE SIZE	MIN. BENDING RADIUS	TMA MODEL	RRU MODEL	TECHNOLOGY	TAPE COLOR	TRX ANTENNA CONFIGURATION	DOWNTILT (ELEC.)
A-1	1	ANDREW SBNHH-1D65C	0°	145'	BOTTOM	ANDREW	175'	1 1/4" ø	20"	N/A	ERICSSON RRUS01	LTE	RED	TX/RX1	4°
–	–		–	145'	–	ANDREW	175'	1 1/4" ø	20"	STI 1900AL	–	UMTS	(2) RED	TX	4°
A-2	–	ANDREW SBNHH-1D65C	–	133'	–	ANDREW		–	20"	–	–	–	–	TX	4°
–	–		–	133'	–	ANDREW		–	20"	–	–	–	–	TX/RX2	4°
B-1	2	ANDREW SBNHH-1D65C	120°	145'	BOTTOM	ANDREW	175'	1 1/4" ø	20"	N/A	ERICSSON RRUS01	LTE	BLUE	TX/RX1	4°
–	–		–	145'	–	ANDREW	175'	1 1/4" ø	20"	STI 1900AL	–	UMTS	(2) BLUE	TX	4°
B-2	–	ANDREW SBNHH-1D65C	–	133'	–	ANDREW		–	20"	–	–	–	–	TX	4°
–	–		–	133'	–	ANDREW		–	20"	–	–	–	–	TX/RX2	4°
C-1	3	ANDREW SBNHH-1D65C	240°	145'	BOTTOM	ANDREW	175'	1 1/4" ø	20"	N/A	ERICSSON RRUS01	LTE	GREEN	TX/RX1	4°
–	–		–	145'	–	ANDREW	175'	1 1/4" ø	20"	STI 1900AL	–	UMTS	(2) GREEN	TX	4°
C-2	–	ANDREW SBNHH-1D65C	–	133'	–	ANDREW		–	20"	–	–	–	–	TX	4°
–	–		–	133'	–	ANDREW		–	20"	–	–	–	–	TX/RX2	4°
					TOTAL LENGTH		1,050'								
														DECLINATION = 9.0° 17' W	

N.T.S. ANTENNA AND COAXIAL CABLE SCHEDULE (REFER TO FINAL RFDS PRIOR TO INSTALLATION) 1

APPROVED CONSTRUCTION PLAN

NAME DATE

PLANNING_____

TRAFFIC_____

FIRE_____

CITY OF WILMINGTON NORTH CAROLINA

Public Services Engineering Division

APPROVED PLAN - NO PERMIT REQUIRED

Signed: _____

COAX PORT ASSIGNMENTS
(VIEW FROM INSIDE EQUIPMENT ROOM/SHELTER)
ANTENNA POSITION
CURRENT

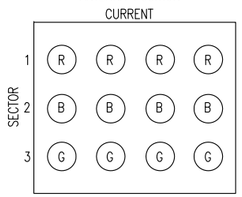

CABLE MARKING LOCATIONS TABLE			
NO.	TAPE	TAG	LOCATIONS
1.	X		EACH TOP-JUMPER SHALL BE COLOR CODED WITH (1) SET OF 3" WIDE BANDS.
2.	X		EACH MAIN COAX SHALL BE COLOR CODED WITH (1) SET OF 3" WIDE BANDS NEAR THE TOP-JUMPER CONNECTION AND WITH (1) SET OF 3/4" WIDE COLOR BANDS JUST PRIOR TO ENTERING THE BTS OR TRANSMITTER BUILDING.
3.		X	CABLE ENTRY PORT ON THE INTERIOR OF THE SHELTER. (IF SHELTER IS USED)
4.	X		ALL BOTTOM JUMPERS SHALL BE COLOR CODED WITH (1) SET OF 3/4" WIDE BANDS ON EACH END OF THE BOTTOM JUMPER.
5.	*	*	ALL BOTTOM JUMPERS SHALL BE COLOR CODED WITH (1) SET OF 3/4" WIDE BANDS ON EACH END OF THE BOTTOM JUMPER.

NOTES:

1. SECTOR ORIENTATION/AZIMUTH WILL VARY FROM REGION TO REGION AND IS SITE SPECIFIC. REFER TO RF REPORT FOR EACH SITE TO DETERMINE THE ANTENNA LOCATION AND FUNCTION OF EACH TOWER SECTOR FACE.
2. THE STANDARD IS BASED ON EIGHT COLORED TAPED-RED, BLUE, GREEN, YELLOW, ORANGE, BROWN, WHITE, AND SLATE (GRAY). THESE TAPES SHOULD BE READILY AVAILABLE TO THE ELECTRICIAN OR CONTRACTOR ON SITE.
3. USING COLOR BANDS ON THE CABLES, MARK ALL RF CABLE BY SECTOR AND CABLE NUMBERAS SHOWN ON "CABLE MARKING COLOR CONVENTION TABLE".
4. ALL COLOR CODE TAPE SHALL BE 3M-35 AND SHALL BE INSTALLED USING A MINIMUM OF (3) WRAPS OF TAPE AND SHALL BE NEATLY TRIMMED AND SMOOTHED OUT SO AS TO AVOID UNRAVELING.
5. ALL COLOR BANDS INSTALLED AT THE TOWER TOP SHALL BE A MINIMUM OF 3" WIDE AND SHALL HAVE A MINIMUM OF 3/4" OF SPACING BETWEEN EACH COLOR.
6. ALL COLOR BANDS INSTALLED AT OR NEAR THE GROUND SHALL BE A MINIMUM OF 3/4" WIDE.
7. ALL COLOR CODES SHALL BE INSTALLED SO AS TO ALIGN NEATLY WITH ONE ANOTHER FROM SIDE-TO-SIDE.
8. COLOR CODE AT TOWER AND BEFORE SHELTER.

* (DENOTES TAG OR TAPE)

N.T.S. COLOR CODE DETAILS & NOTES 2

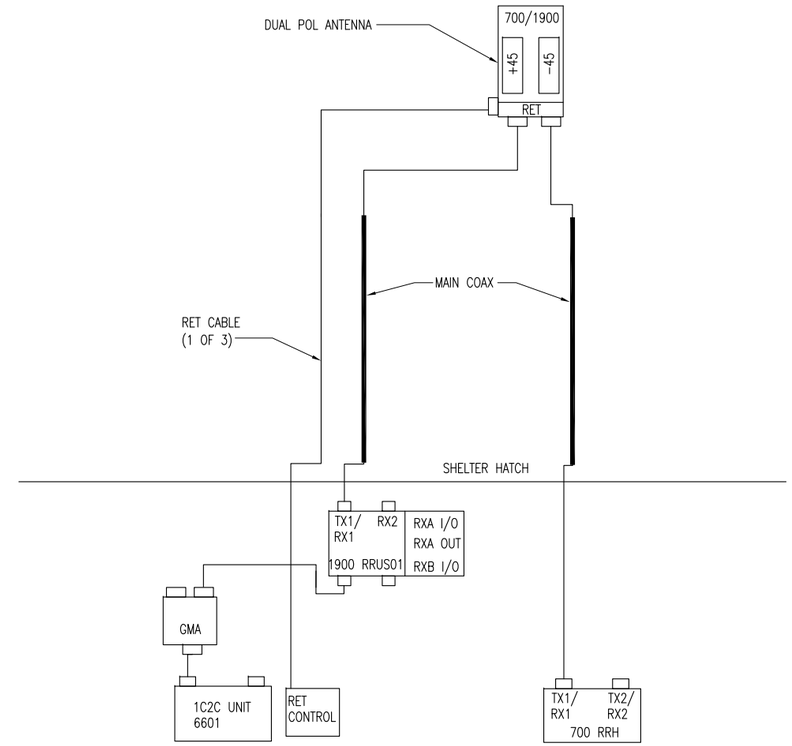

N.T.S. TYPICAL ANTENNA CABLE CONFIGURATION (1 ANTENNA PER SECTOR) 3

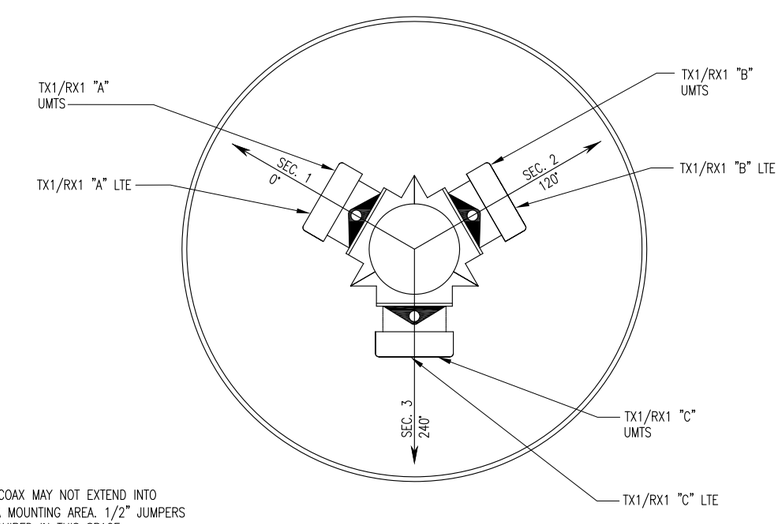

NOTES:

1. 1 1/4" COAX MAY NOT EXTEND INTO ANTENNA MOUNTING AREA. 1/2" JUMPERS ARE REQUIRED IN THIS SPACE.

N.T.S. COAX CODES (1 ANTENNA PER SECTOR) 4

AMERICAN TOWER® CORPORATION
496 LONG POINT ROAD
MOUNT PLEASANT, SC 29464
TEL.: (843) 971-8385
FAX: (843) 971-8889

THESE DRAWINGS AND/OR THE ACCOMPANYING SPECIFICATION AS INSTRUMENTS OF SERVICE, ARE THE EXCLUSIVE PROPERTY OF AMERICAN TOWER CORPORATION AND THEIR USE AND PUBLICATION SHALL BE RESTRICTED TO THE ORIGINAL SITE FOR WHICH THEY ARE PREPARED. REUSE, REPRODUCTION OR PUBLICATION BY ANY METHOD, IN WHOLE OR IN PART, IS PROHIBITED EXCEPT BY WRITTEN PERMISSION FROM AMERICAN TOWER CORPORATION TITLE TO THESE PLANS AND/OR SPECIFICATIONS SHALL REMAIN WITH AMERICAN TOWER CORPORATION WITHOUT PREJUDICE AND VISUAL CONTACT WITH THEM SHALL CONSTITUTE PRIMA FACIE EVIDENCE OF ACCEPTANCE OF THESE RESTRICTIONS.

BC architects engineers
5661 COLUMBIA PIKE, SUITE 200
FALLS CHURCH, VA 22041-2868
TEL: (703) 671-6000
FAX: (703) 671-6300

SHEET REVISION

NO.	DESCRIPTION	BY	DATE
1			
2			
3			
4			
5			
6			

ATC SITE NUMBER:
275164

ATC SITE NAME:
MAC RAE PARK NC

SITE ADDRESS:
4417 LAKE AVE.
WILMINGTON, NC 28409

STAMP HERE:
NORTH CAROLINA PROFESSIONAL SEAL 0024902 ENGINEER CHRISTOPHER D. MORIN
9.15.14

DRAWN BY:	AGT
CHECKED BY:	DRS
DATE DRAWN:	03-24-14
SUBMISSION:	FINAL CD'S

SHEET TITLE:
AT&T ELECTRICAL DETAILS

SHEET NUMBER: E-3
REV. #

02-11-14 VICTOR GARCIA 16:52:34 Y:/Drawings - 2013/ATC/Mac Rae Park NC - 275164/_CD's_2014.02.10/E3.dwg

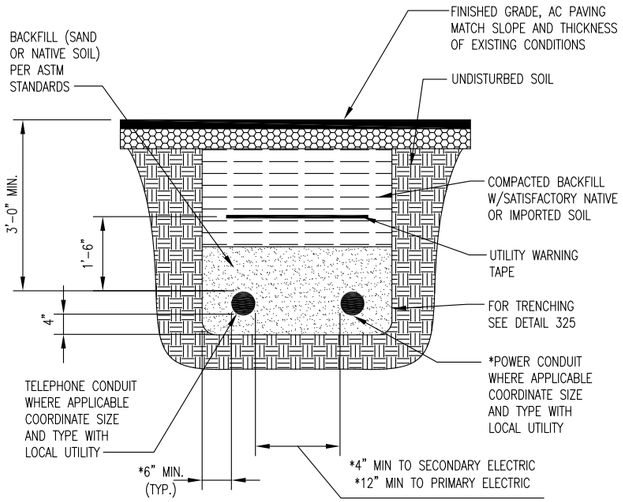

N.T.S. | POWER AND TELCO DUCT BANK DETAIL | 1

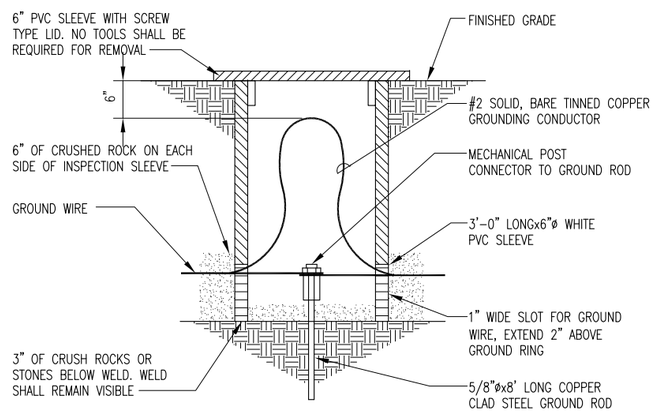

N.T.S. | GROUND ROD TEST WELL | 2

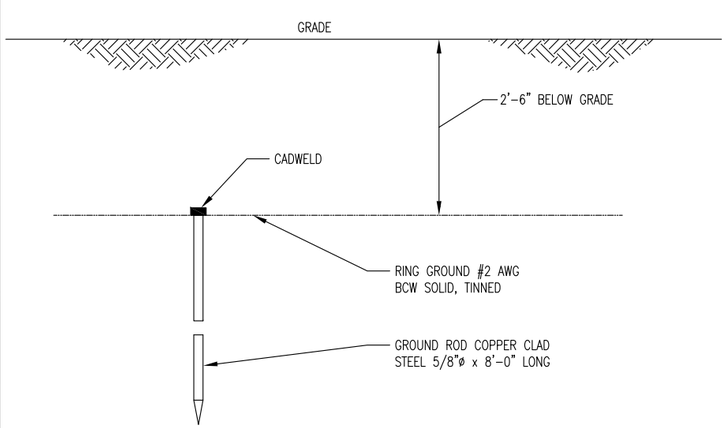

N.T.S. | GROUND ROD | 3

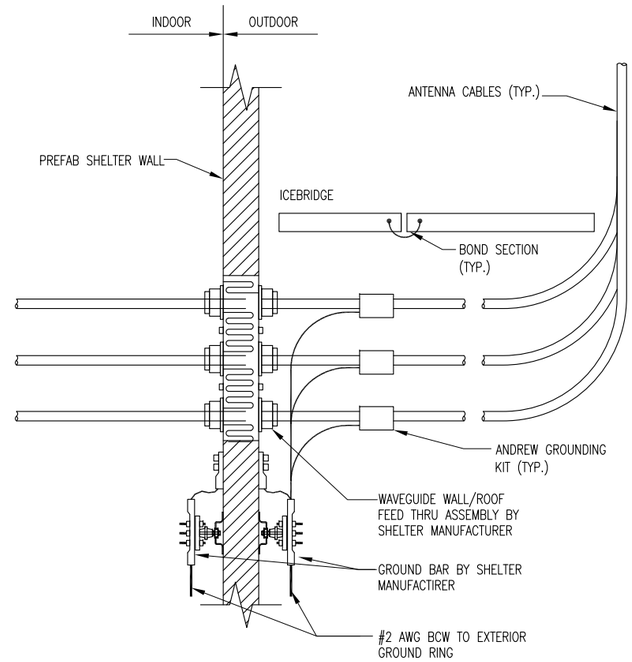

N.T.S. | CABLE INSTALLATION W/ WALL/ROOF FEED THRU ASSEMBLY | 4

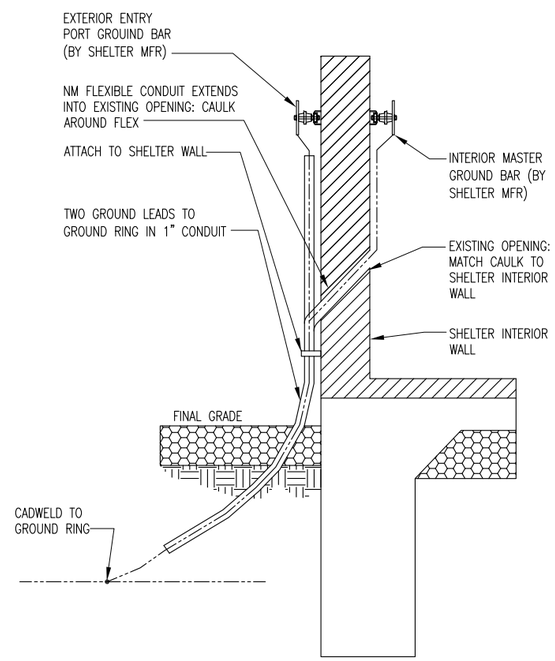

N.T.S. | SHELTER WALL PENETRATION DETAIL | 5

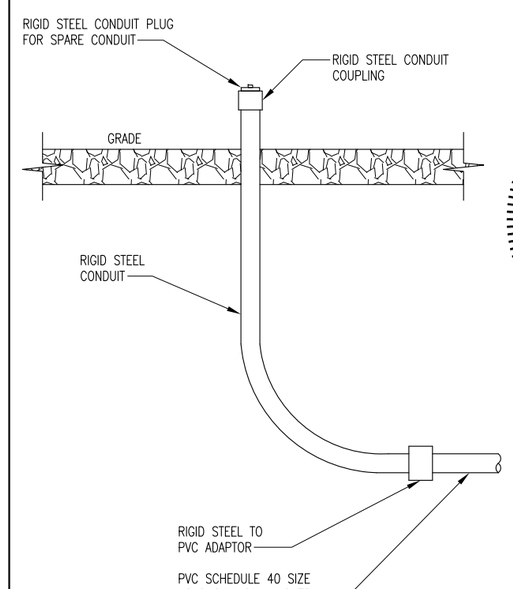

N.T.S. | UNDERGROUND CONDUIT STUB-UP | 6

CITY OF WILMINGTON NORTH CAROLINA
Public Services Engineering Division
APPROVED PLAN - NO PERMIT REQUIRED
Signed: _____

APPROVED CONSTRUCTION PLAN

	NAME	DATE
PLANNING		
TRAFFIC		
FIRE		

AMERICAN TOWER® CORPORATION
496 LONG POINT ROAD
MOUNT PLEASANT, SC 29464
TEL.: (843) 971-8385
FAX: (843) 971-8889

THESE DRAWINGS AND/OR THE ACCOMPANYING SPECIFICATION AS INSTRUMENTS OF SERVICE, ARE THE EXCLUSIVE PROPERTY OF AMERICAN TOWER CORPORATION AND THEIR USE AND PUBLICATION SHALL BE RESTRICTED TO THE ORIGINAL SITE FOR WHICH THEY ARE PREPARED. REUSE, REPRODUCTION OR PUBLICATION BY ANY METHOD, IN WHOLE OR IN PART, IS PROHIBITED EXCEPT BY WRITTEN PERMISSION FROM AMERICAN TOWER CORPORATION TITLE TO THESE PLANS AND/OR SPECIFICATIONS SHALL REMAIN WITH AMERICAN TOWER CORPORATION WITHOUT PREJUDICE AND VISUAL CONTACT WITH THEM SHALL CONSTITUTE PRIMA FACIE EVIDENCE OF ACCEPTANCE OF THESE RESTRICTIONS.

BC architects engineers
5661 COLUMBIA PIKE, SUITE 200
FALLS CHURCH, VA 22041-2868
TEL: (703) 671-6000
FAX: (703) 671-6300

SHEET REVISION

NO.	DESCRIPTION	BY	DATE
1			
2			
3			
4			
5			
6			

ATC SITE NUMBER:
275164
ATC SITE NAME:
MAC RAE PARK NC
SITE ADDRESS:
4417 LAKE AVE.
WILMINGTON, NC 28409

STAMP HERE:
NORTH CAROLINA PROFESSIONAL SEAL 0024902 ENGINEER CHRISTOPHER D. MORIN
9.15.14

DRAWN BY:	AGT
CHECKED BY:	DRS
DATE DRAWN:	03-24-14
SUBMISSION:	FINAL CD'S

SHEET TITLE:
AT&T ELECTRICAL DETAILS

SHEET NUMBER: E-4
REV. #

02-11-14 VICTOR GARCIA 10:39:44 Y:/Drawings - 2013/ATC/Mac Rae Park NC - 275164/_CD's_2014.02.10/E4.dwg

NOTES:

1. ALL WIRE TO BE #12 THHN/THWN UNLESS NOTED OTHERWISE.
COLOR CODE:
   Aø = BLACK
   Bø = RED
   NEUTRAL = WHITE
   GROUND = GREEN
2. ALL WORK TO CONFORM TO 2011 N.E.C.
3. LABEL SERVICE DISCONNECT WITH A RED TAG.
4. SWITCH LEG CONDUCTORS SHALL BE THE SAME COLOR AS CIRCUIT CONDUCTORS.
5. PULL WIRES TO END OF FLEXIBLE NONMETALLIC CONDUIT & TAG.
6. PULL SEPARATE GROUND CONDUCTOR FOR EACH CIRCUIT.
7. WIRE SMOKE DETECTOR (ITEM 13) AS SHOWN ONLY IF 120 VOLT OPTION IS USED,)

SEE ELECTRICAL SCHEMATIC SHEET 7/E-5

PANEL CIRCUIT AND LOAD SCHEDULE

3 #8'S

SEE NOTES 5 & 6

3 #13'S

GFI RECEPTACLE

	LOAD DESCRIPTION	QTY.	UNIT V.A.	LOAD PER PHASE (VA) A	B	C	LOADS CONTINUOUS	LOADS NON-CONTINUOUS	TRIP	POLES	WIRE SIZE	A.I.C.	WIRE TYPE
1	RECTIFIER #1	1	1000	1000			X		40	2	8	10,000	THHN
3		1	1000		1000		X		40	2	8	10,000	THHN
5	RECTIFIER #2	1	1000	1000			X		40	2	8	10,000	THHN
7		1	1000		1000		X		40	2	8	10,000	THHN
9	RECTIFIER #3	1	1000	1000			X		40	2	8	10,000	THHN
11		1	1000		1000		X		40	2	8	10,000	THHN
13	RECTIFIER #4	1	1000	1000			X		40	2	8	10,000	THHN
15		1	1000		1000		X		40	2	8	10,000	THHN
17	RECTIFIER #5	1	1000	1000			X		40	2	8	10,000	THHN
19		1	1000		1000		X		40	2	8	10,000	THHN
21	RECTIFIER #6	1	1000	1000			X		40	2	8	10,000	THHN
23		1	1000		1000		X		40	2	8	10,000	THHN
25	RECTIFIER #7	1	1000	1000			X		40	2	8	10,000	THHN
27		1	1000		1000		X		40	2	8	10,000	THHN
29	RECTIFIER #8	1	1000	1000			X		40	2	8	10,000	THHN
31		1	1000		1000		X		40	2	8	10,000	THHN
33	RECTIFIER #9	1	1000	1000			X		40	2	8	10,000	THHN
35		1	1000		1000		X		40		8	10,000	THHN
37	RECTIFIER #10 (OPTIONAL)								40	2		10,000	THHN
39									40	2		10,000	THHN
41	EXTERIOR RECEPTACLE	2	180	360			X		20	1	12	10,000	THHN
			SUBTOTAL CONTINUOUS	9360	9000								
			SUBTOTAL NON-CONTINUOUS	–	–								

VOLTAGE: 120/240 CYCLE: 60 PHASE: 1 WIRES: 3
NEUTRAL: 200 AMPS
MAIN BREAKER: 200 AMP FRAME A.I.C. 10,000 TRIP: 200 AMPS
MAIN LUGS: AMPS MAIN COPPER BUS: 400 AMPS
MAINS: TOP [X] BOTTOM [ ]

SERVICE: 120/240 VAC
DESIGNATION: N/A
LOCATION: N/A

WIRE TYPE	A.I.C.	WIRE SIZE	POLES	TRIP	LOADS CONTINUOUS	LOADS NON-CONTINUOUS	LOAD PER PHASE (VA) A	B	C	UNIT VA	QTY.	LOAD DESCRIPTION	
THHN	10,000	8	2	50	X		3340			3340	1	HVAC #1	2
THHN	10,000	8	2	50	X					3340	1		4
THHN	10,000	8	2	50	X					3340	1	HVAC #2	6
THHN	10,000	8	2	50	X					3340	1		8
THHN	10,000											SPACE	10
THHN	10,000											SPACE	12
THHN	10,000	12	1	20		X	1080					INTERIOR RECEPTACLE	14
THHN	10,000	12	1	15		X		271				INTERIOR LIGHTS	15
THHN	10,000	12	1	15		X	150					EXTERIOR LIGHTS	18
THHN	10,000											RECTIFIER #11 (OPTIONAL)	20
THHN	10,000												22
THHN	10,000											RECTIFIER #12 (OPTIONAL)	24
THHN	10,000												26
THHN	10,000											RECTIFIER #13 (OPTIONAL)	28
THHN	10,000												30
THHN	10,000											RECTIFIER #14 (OPTIONAL)	32
THHN	10,000												34
THHN	10,000											RECTIFIER #15 (OPTIONAL)	36
THHN	10,000												38
THHN	10,000											RECTIFIER #16 (OPTIONAL)	40
THHN	10,000												42
							330	331		SUBTOTAL CONTINUOUS			
							6680	6680		SUBTOTAL NON-CONTINUOUS			

MANUFACTURER: INTERSECT
TYPE AND CATALOG NUMBER: INTERSECT FB# 823-00023 AA1220061-3S
NO EQUAL: [X] APPROVED EQUAL: [ ]
MOUNTING: SURFACE: [X] FLUSH: [ ]

TOTAL KVA CONTINUOUS x 1.25	23.78
TOTAL KVA NON-CONTINUOUS	13.38
TOTAL KVA	37.14
TOTAL AMPS	154.75

5 TON HVAC W/ 5KW HEAT STRIP

MOTION DETECTOR

CITY OF WILMINGTON NORTH CAROLINA
Public Service Engineering Division
APPROVED PLAN - NO PERMIT REQUIRED
Signed: _____

APPROVED CONSTRUCTION PLAN
NAME DATE
PLANNING_____
TRAFFIC_____
FIRE_____

N.T.S. **AT&T PANELBOARD SCHEDULE** 1

ELECTRICAL INSTALLATION NOTES:

1. ALL ELECTRICAL WORK SHALL BE PERFORMED IN ACCORDANCE WITH THE PROJECT SPECIFICATIONS, NEC AND ALL APPLICABLE LOCAL CODES.
2. CONDUIT ROUTINGS ARE SCHEMATIC. SUBCONTRACTOR SHALL INSTALL CONDUITS SO THAT ACCESS TO EQUIPMENT IS NOT BLOCKED.
3. WIRING, RACEWAY AND SUPPORT METHODS AND MATERIALS SHALL COMPLY WITH THE REQUIREMENTS OF THE NEC AND TELCORDIA.
4. ALL CIRCUITS SHALL BE SEGREGATED AND MAINTAIN MINIMUM CABLE SEPARATION AS REQUIRED BY THE NEC AND TELCORDIA.
5. ALL CIRCUITS SHALL NOT BE ROUTED THROUGH LADDER-STYLE CABLE TRAY RUNGS.
6. EACH END OF EVERY POWER, POWER PHASE CONDUCTOR (I.E. HOTS), GROUNDING, AND THE CONDUCTOR AND CABLE SHALL BE LABELED WITH COLOR-CODED INSULATION OR ELECTRICAL TAPE (3M BRAND, 1/2 INCH PLASTIC ELECTRICAL TAPE WITH UV PROTECTION, OR EQUAL). THE IDENTIFICATION METHOD SHALL CONFORM WITH NEC & OSHA.
7. ALL ELECTRICAL COMPONENTS SHALL BE CLEARLY LABELED WITH ENGRAVED LAMACOID PLASTIC LABELS. ALL EQUIPMENT SHALL BE LABELED WITH THEIR VOLTAGE RATING, PHASE CONFIGURATION, WIRE CONFIGURATION, POWER OR AMPACITY RATING, AND BRANCH CIRCUIT ID NUMBERS, (I.E. PANELBOARD AND CIRCUIT ID'S).
8. PANELBOARDS (ID NUMBERS) AND INTERNAL CIRCUIT BREAKERS (CIRCUIT ID NUMBERS) SHALL BE CLEARLY LABELED WITH ENGRAVED LAMACOID PLASTIC LABELS.
9. ALL TIE WRAPS SHALL BE CUT FLUSH WITH APPROVED CUTTING TOOLS TO REMOVE SHARP EDGES.
10. POWER CONTROL AND EQUIPMENT GROUND WIRING IN TUBING OR CONDUIT SHALL BE SINGLE CONDUCTOR (#14 AND LARGER) 600V, OIL RESISTANT THHN OR THWN-2 CLASS B STRANDED COPPER CABLE RATED FOR 90° C (WET AND DRY) OPERATION; LISTED OR LABELED FOR THE LOCATION AND RACEWAY SYSTEM USED, UNLESS OTHERWISE SPECIFIED.
11. SUPPLEMENTAL EQUIPMENT GROUND WIRING LOCATED INDOORS SHALL BE SINGLE CONDUCTOR (#6 AWG OR LARGER), 600 V, OIL RESISTANT THHN OR THWN-2 GREEN INSULATION, CLASS B STRANDED COPPER CABLE RATED FOR 90° C (WET AND DRY) OPERATION; LISTED OR LABELED FOR THE LOCATION AND RACEWAY SYSTEM USED, UNLESS OTHERWISE SPECIFIED.
12. POWER AND CONTROL WIRING, NOT IN TUBING OR CONDUIT, SHALL BE MULTI-CONDUCTOR, TYPE TC CABLE (#4 AWG OR LARGER), 600 V, OIL RESISTANT THHN OR THWN-2, CLASS B STRANDED COPPER CABLE RATED FOR 90° C (WET AND DRY) OPERATION; WITH OUTER JACKET. LISTED OR LABELED FOR THE LOCATION USED UNLESS OTHERWISE SPECIFIED.
13. ALL POWER AND POWER GROUNDING CONNECTIONS SHALL BE CRIMP-STYLE, COMPRESSION WIRE LUGS AND WIRENUTS BY THOMAS AND BETTS (OR EQUAL). LUGS AND WIRENUTS SHALL BE RATED FOR OPERATION AT NO LESS THAN 75° C IF AVAILABLE).
14. RACEWAY AND CABLE TRAY SHALL BE LISTED OR LABELED FOR ELECTRICAL USE IN ACCORDANCE WITH NEMA, UL, ANSI/IEEE, AND NEC.
15. ELECTRICAL METALLIC TUBING (EMT) OR RIGID NONMETALLIC CONDUIT (I.E., RIGID PVC SCHEDULE 40, OR RIGID PVC SCHEDULE 80 OFR LOCATIONS SUBJECT TO PHYSICAL DAMAGE) SHALL BE USED FOR EXPOSED INDOOR LOCATIONS.
16. ELECTRICAL METALLIC TUBING (EMT), ELECTRICAL NONMETALLIC TUBING (ENT), OR RIGID NONMETALLIC CONDUIT (RIGID PVC, SCHEDULE 40) SHALL BE USED FOR CONCEALED INDOOR LOCATIONS.
17. GALVANIZED STEEL INTERMEDIATE METALLIC CONDUIT (IMC) SHALL BE USED FOR OUTDOOR LOCATIONS ABOVE GRADE.
18. RIGID NONMETALLIC CONDUIT (I.E., RIGID PVC SCHEDULE 40 OR RIGID PVC SCHEDULE 80) SHALL BE USED UNDERGROUND, DIRECT BURIED, IN AREAS OR OCCASIONAL LIGHT VEHICLE TRAFFIC OR ENCASED IN REINFORCED CONCRETE IN AREAS OF HEAVY VEHICLE TRAFFIC.
19. LIQUID-TIGHT FLEXIBLE METALLIC CONDUIT (LIQUID-TITE FLEX) SHALL BE USED INDOORS AND OUTDOORS, WHERE VIBRATION OCCURS OR FLEXIBILITY IS NEEDED.
20. CONDUIT AND TUBING FITTINGS SHALL BE THREADED OR COMPRESSION-TYPE AND APPROVED FOR THE LOCATION USED. SETSCREW FITTINGS ARE NOT ACCEPTABLE.
21. CABINETS, BOXES, AND WIREWAYS SHALL BE LISTED OR LABELED FOR ELECTRICAL USE IN ACCORDANCE WITH NEMA UL, ANSI/IEEE, AND NEC.
22. WIREWAYS SHALL BE EPOXY-COATED (GRAY) AND INCLUDE A HINGED COVER, DESIGNED TO SWING OPEN DOWNWARD; SHALL BE PANDUIT TYPE E (OR EQUAL); AND RATED NEMA I (OR BETTER) INDOORS, OR NEMA 3R (OR BETTER) OUTDOORS.
23. EQUIPMENT CABINETS, TERMINAL BOXES, JUNCTION BOXES, AND PULL BOXES SHALL BE GALVANIZED OR EPOXY-COATED SHEET STEEL, SHALL MEET OR EXCEED UL 50, AND RATED NEMA I (OR BETTER) INDOORS, OR NEMA 3R (OR BETTER) OUTDOORS.
24. METAL RECEPTACLE, SWITCH, AND DEVICE BOXES SHALL BE GALVANIZED, EPOXY-COATED, OR NON-CORRODING; SHALL MEET OR EXCEED UL 514A AND NEMA OS I; AND RATED NEMA I (OR BETTER) INDOORS, OR WEATHER PROTECTED (WP OR BETTER) OUTDOORS.
25. NONMETALLIC RECEPTACLE, SWITCH, AND DEVICE BOXES SHALL MEET OR EXCEED NEMA OS 2; AND RATED NEMA I (OR BETTER) INDOORS, OR WEATHER PROTECTED (WP OR BETTER) OUTDOORS.
26. THE SUBCONTRACTOR SHALL NOTIFY AND OBTAIN NECESSARY AUTHORIZATION FROM THE CONTRACTOR BEFORE COMMENCING WORK ON THE AC POWER DISTRIBUTION PANELS.
27. THE SUBCONTRACTOR SHALL PROVIDE NECESSARY TAGGING ON THE BREAKERS, CABLES AND DISTRIBUTION PANELS IN ACCORDANCE WITH THE APPLICABLE CODES AND STANDARDS TO SAFEGUARD AGAINST LIFE AND PROPERTY.

NOTES 2

AMERICAN TOWER CORPORATION
496 LONG POINT ROAD
MOUNT PLEASANT, SC 29464
TEL.: (843) 971-8385
FAX: (843) 971-8889

THESE DRAWINGS AND/OR THE ACCOMPANYING SPECIFICATION AS INSTRUMENTS OF SERVICE, ARE THE EXCLUSIVE PROPERTY OF AMERICAN TOWER CORPORATION AND THEIR USE AND PUBLICATION SHALL BE RESTRICTED TO THE ORIGINAL SITE FOR WHICH THEY ARE PREPARED. REUSE, REPRODUCTION OR PUBLICATION BY ANY METHOD, IN WHOLE OR IN PART, IS PROHIBITED EXCEPT BY WRITTEN PERMISSION FROM AMERICAN TOWER CORPORATION TITLE TO THESE PLANS AND/OR SPECIFICATIONS SHALL REMAIN WITH AMERICAN TOWER CORPORATION WITHOUT PREJUDICE AND VISUAL CONTACT WITH THEM SHALL CONSTITUTE PRIMA FACIE EVIDENCE OF ACCEPTANCE OF THESE RESTRICTIONS.

BC architects engineers
5661 COLUMBIA PIKE, SUITE 200
FALLS CHURCH, VA 22041-2868
TEL: (703) 671-6000
FAX: (703) 671-6300

SHEET REVISION

NO.	DESCRIPTION	BY	DATE
1			
2			
3			
4			
5			
6			

ATC SITE NUMBER:
275164
ATC SITE NAME:
MAC RAE PARK NC
SITE ADDRESS:
4417 LAKE AVE.
WILMINGTON, NC 28409

STAMP HERE:
NORTH CAROLINA PROFESSIONAL SEAL 0024902 ENGINEER CHRISTOPHER D. MORIN
9.15.14

DRAWN BY:	AGT
CHECKED BY:	DRS
DATE DRAWN:	03-24-14
SUBMISSION:	FINAL CD'S

SHEET TITLE:
AT&T PANELBOARD SCHEDULE

SHEET NUMBER: E-5
REV. #

06-26-14 ARNOLD 16:17:51 Y:/Drawings - 2013/ATC/Mac Rae Park NC - 275164/_CD's Rev 3 2014-06-26/E5.dwg

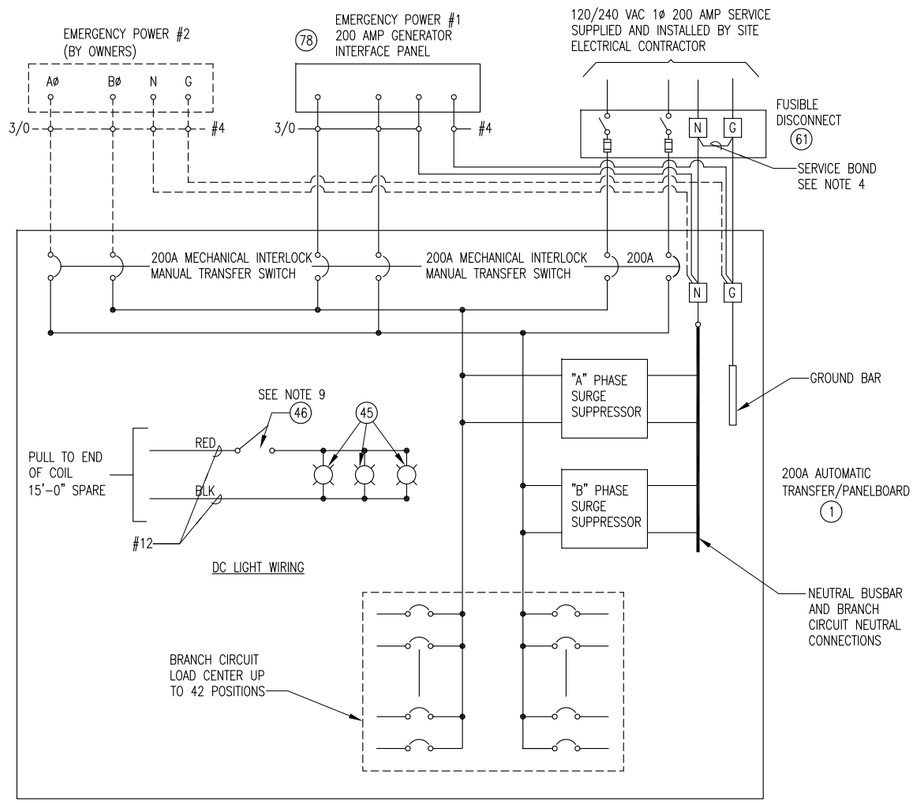

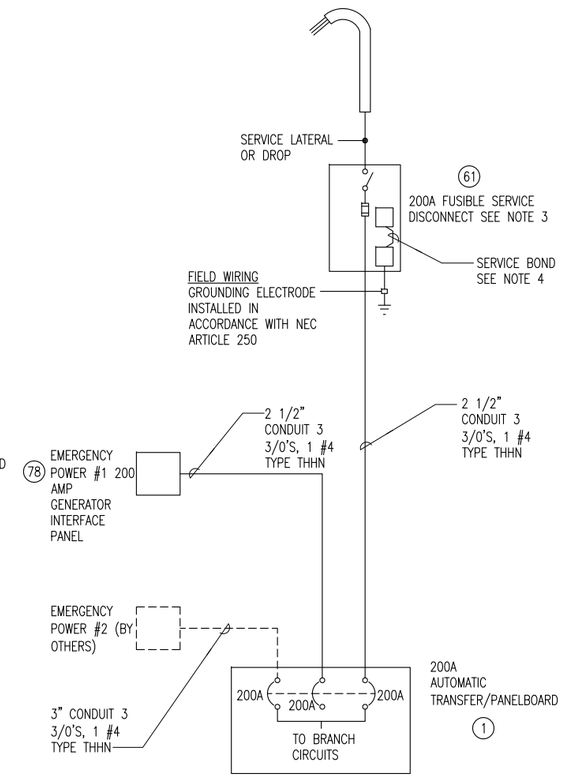

CITY OF WILMINGTON NORTH CAROLINA
Public Services Engineering Division
APPROVED PLAN - NO PERMIT REQUIRED
Signed: _____

APPROVED CONSTRUCTION PLAN

NAME	DATE
PLANNING	
TRAFFIC	
FIRE	

NOTES:

1.------DASHED LINES DENOTE FIELD WORK.

2. ALL CIRCUIT BREAKERS ARE 10,000 A.I.C. TYPICALLY. A.I.C. RATING MAY CHANGE AS ELECTRICAL SUPPLY DEMAND CHANGES.

3. SERVICE BOND IS TO BE MADE BY DEVICES (STRAPS, SCREWS, ETC.) SUPPLIED BY EQUIP. MANUFACTURER. IF NO SUCH DEVICE IS SUPPLIED, BOND IS TO BE MADE WITH #4 AWG GREEN FOR 200 AMP. SERVICE AND 1/0 AWG GREEN FOR 400 AMP SERVICE.

4. WHEN SERVICE OVERCURRENT DISCONNECT IS FIELD INSTALLED, A TEMPORARY SERVICE BOND WILL BE INSTALLED FOR SAFETY PURPOSE.

5. INSTALL SERVICE BOND JUMPER AT SERVICE DISCONNECT.

6. ALL CONDUCTORS SHALL BE TERMINATED WITH PROPERLY SIZED SOLDERLESS LUGS RATED FOR COPPER CABLE.

7. NOT MORE THAN TWO LUGS SHALL BE TERMINATED ON A TERMINAL.

8. USE TOP SWITCH ONLY.

9. ALL CONDUIT SHALL BE EMT UNLESS OTHERWISE NOTED.

10. ALL CONDUIT THROUGH WALL SHALL BE RIGID UNLESS OTHERWISE NOTED.

N.T.S. | AT&T ELECTRICAL DIAGRAM | 1

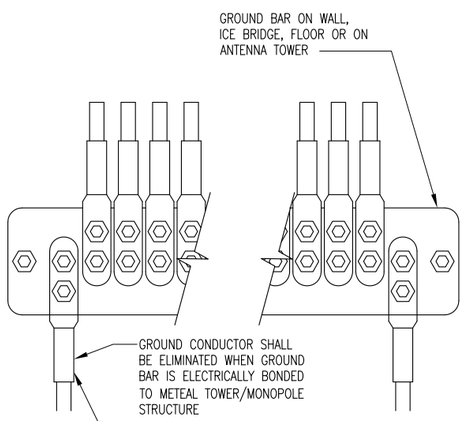

N.T.S. | GRD. WIRE INSTALLATION TO GRD. BAR | 2

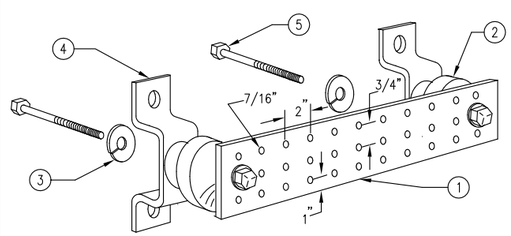

LEGEND

1- COPPER GROUND BAR, 1/4" X 4" X 20", NEWTON INSTRUMENT CO. CAT. NO. B-6142 OR EQUAL. HOLE CENTERS TO MATCH NEMA DOUBLE LUG CONFIGURATION. (ACTUAL GROUND BAR SIZE WILL VARY BASED ON NUMBER OF GROUND CONNECTIONS)

2- INSULATORS, NEWTON INSTRUMENT CAT. NO. 3061-4 OR EQUAL

3- 5/8" LOCKWASHERS, NEWTON INSTRUMENT CO. CAT. NO. 3015-8 OR EQUAL

4- WALL MOUNTING BRACKET, NEWTON INSTRUMENT CO. CAT. NO. A-6056 OR EQUAL

5- 5/8-11 X 1" HHCS BOLTS, NEWTON INSTRUMENT CO. CAT. NO. 3012-1 OR EQUAL

N.T.S. | GROUND BAR DETAIL | 3

NOTES:
1. DO NOT INSTALL CABLE GROUND KIT AT A BEND AND ALWAYS DIRECT GROUND WIRE DOWN TO CIGBE

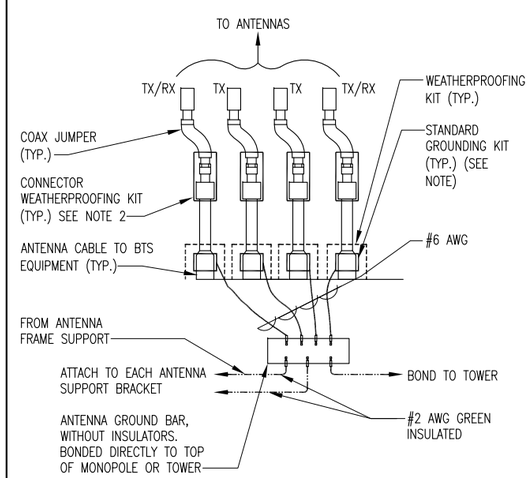

CONNECTION OF GROUND WIRES TO GROUNDING BAR @ ANTENNAS

N.T.S. | DETAIL | 4

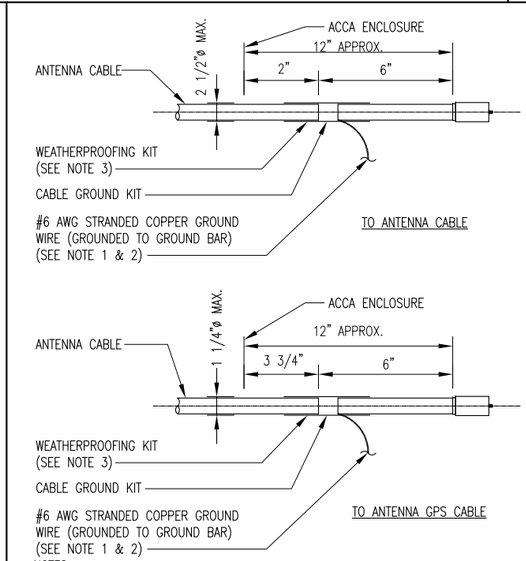

NOTES:
1. DO NOT INSTALL CABLE GROUND KIT AT A BEND AND ALWAYS DIRECT GROUND WIRE DOWN TO GROUND BAR.
2. GROUNDING KIT SHALL BE ANDREW SURE GROUND TYPE KIT WITH TWO-HOLE LUG.
3. WEATHER PROOFING SHALL BE ANDREW TWO-PART TAPE SUPPLIED WITH KIT. COLD SHRINK SHALL NOT BE USED.

N.T.S. | CABLE GROUND KIT CONNECTION | 5

AMERICAN TOWER CORPORATION
496 LONG POINT ROAD
MOUNT PLEASANT, SC 29464
TEL.: (843) 971-8385
FAX: (843) 971-8889

THESE DRAWINGS AND/OR THE ACCOMPANYING SPECIFICATION AS INSTRUMENTS OF SERVICE, ARE THE EXCLUSIVE PROPERTY OF AMERICAN TOWER CORPORATION AND THEIR USE AND PUBLICATION SHALL BE RESTRICTED TO THE ORIGINAL SITE FOR WHICH THEY ARE PREPARED. REUSE, REPRODUCTION OR PUBLICATION BY ANY METHOD, IN WHOLE OR IN PART, IS PROHIBITED EXCEPT BY WRITTEN PERMISSION FROM AMERICAN TOWER CORPORATION TITLE TO THESE PLANS AND/OR SPECIFICATIONS SHALL REMAIN WITH AMERICAN TOWER CORPORATION WITHOUT PREJUDICE AND VISUAL CONTACT WITH THEM SHALL CONSTITUTE PRIMA FACIE EVIDENCE OF ACCEPTANCE OF THESE RESTRICTIONS.

BC architects engineers
5661 COLUMBIA PIKE, SUITE 200
FALLS CHURCH, VA 22041-2868
TEL: (703) 671-6000
FAX: (703) 671-6300

SHEET REVISION

NO.	DESCRIPTION	BY	DATE
1			
2			
3			
4			
5			
6			

ATC SITE NUMBER:
275164
ATC SITE NAME:
MAC RAE PARK
NC
SITE ADDRESS:
4417 LAKE AVE.
WILMINGTON, NC 28409

STAMP HERE:
NORTH CAROLINA PROFESSIONAL SEAL 0024902 ENGINEER CHRISTOPHER D. MORIN
9.15.14

DRAWN BY:	AGT
CHECKED BY:	DRS
DATE DRAWN:	03-24-14
SUBMISSION:	FINAL CD'S

SHEET TITLE:
AT&T ELECTRICAL DETAILS

SHEET NUMBER: E-6
REV. #

02-11-14 VICTOR GARCIA 10:43:22 Y:/Drawings - 2013/ATC/Mac Rae Park NC - 275164/_CD's_2014.02.10/E6.dwg

APPROVED CONSTRUCTION PLAN

NAME	DATE
PLANNING	
TRAFFIC	
FIRE	

CITY OF WILMINGTON NORTH CAROLINA
Public Services • Engineering Division
APPROVED PLAN – NO PERMIT REQUIRED
Signed: _____

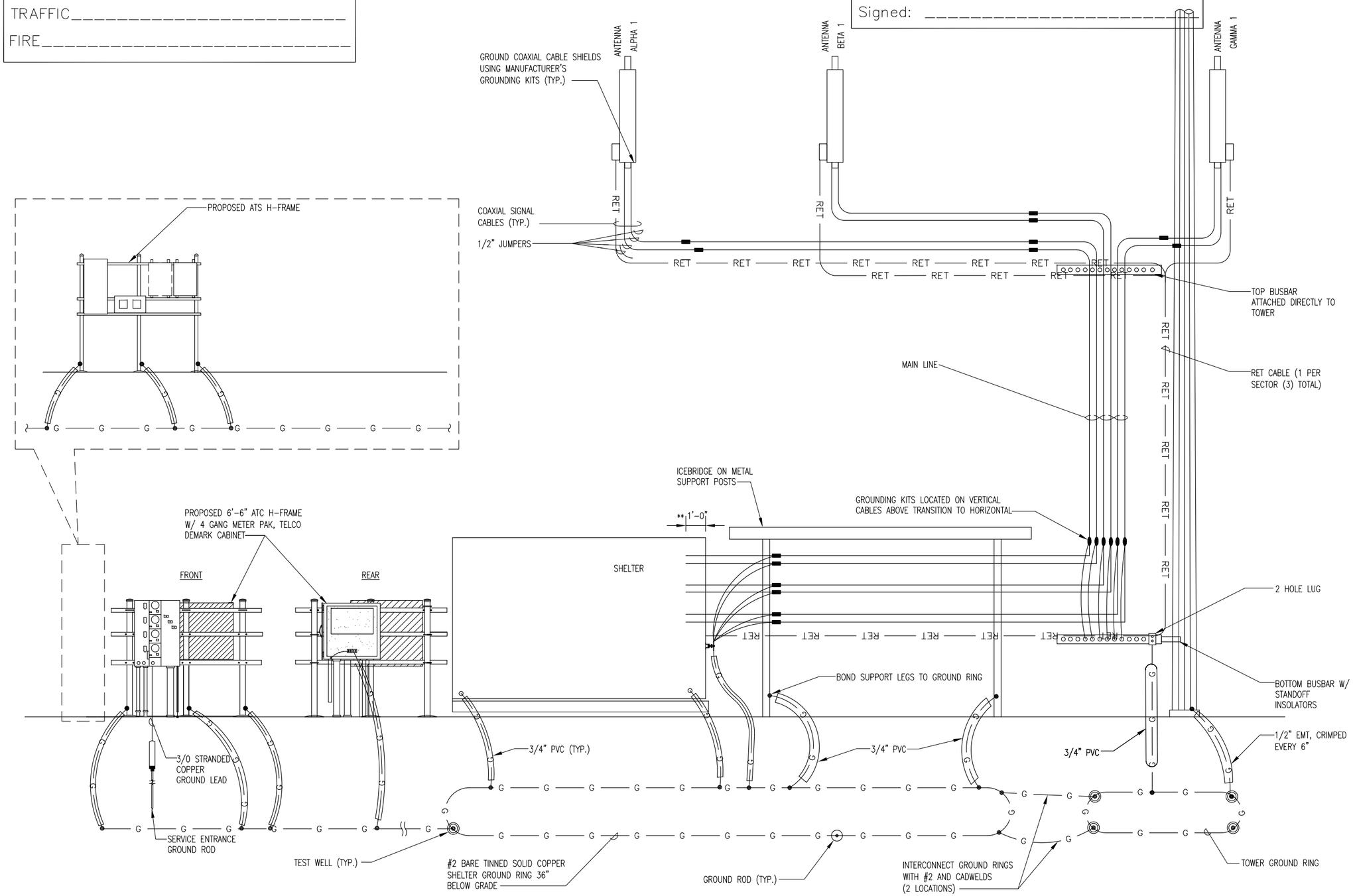

N.T.S.

GROUNDING RISER DIAGRAM

1

AMERICAN TOWER® CORPORATION
496 LONG POINT ROAD
MOUNT PLEASANT, SC 29464
TEL.: (843) 971-8385
FAX: (843) 971-8889

THESE DRAWINGS AND/OR THE ACCOMPANYING SPECIFICATION AS INSTRUMENTS OF SERVICE, ARE THE EXCLUSIVE PROPERTY OF AMERICAN TOWER CORPORATION AND THEIR USE AND PUBLICATION SHALL BE RESTRICTED TO THE ORIGINAL SITE FOR WHICH THEY ARE PREPARED. REUSE, REPRODUCTION OR PUBLICATION BY ANY METHOD, IN WHOLE OR IN PART, IS PROHIBITED EXCEPT BY WRITTEN PERMISSION FROM AMERICAN TOWER CORPORATION TITLE TO THESE PLANS AND/OR SPECIFICATIONS SHALL REMAIN WITH AMERICAN TOWER CORPORATION WITHOUT PREJUDICE AND VISUAL CONTACT WITH THEM SHALL CONSTITUTE PRIMA FACIE EVIDENCE OF ACCEPTANCE OF THESE RESTRICTIONS.

BC architects engineers
5661 COLUMBIA PIKE, SUITE 200
FALLS CHURCH, VA 22041-2868
TEL: (703) 671-6000
FAX: (703) 671-6300

SHEET REVISION

NO.	DESCRIPTION	BY	DATE
1			
2			
3			
4			
5			
6			

ATC SITE NUMBER:
275164
ATC SITE NAME:
MAC RAE PARK NC
SITE ADDRESS:
4417 LAKE AVE.
WILMINGTON, NC 28409

STAMP HERE:
NORTH CAROLINA PROFESSIONAL SEAL 0024902 ENGINEER CHRISTOPHER D. MORIN
9.15.14

DRAWN BY:	AGT
CHECKED BY:	DRS
DATE DRAWN:	03-24-14
SUBMISSION:	FINAL CD'S

SHEET TITLE:
AT&T ELECTRICAL DETAILS

SHEET NUMBER: **E-7**
REV. #

02-11-14 VICTOR GARCIA 10:45:09 Y:/Drawings – 2013/ATC/Mac Rae Park NC – 275164/_CD's_2014.02.10/E7.dwg

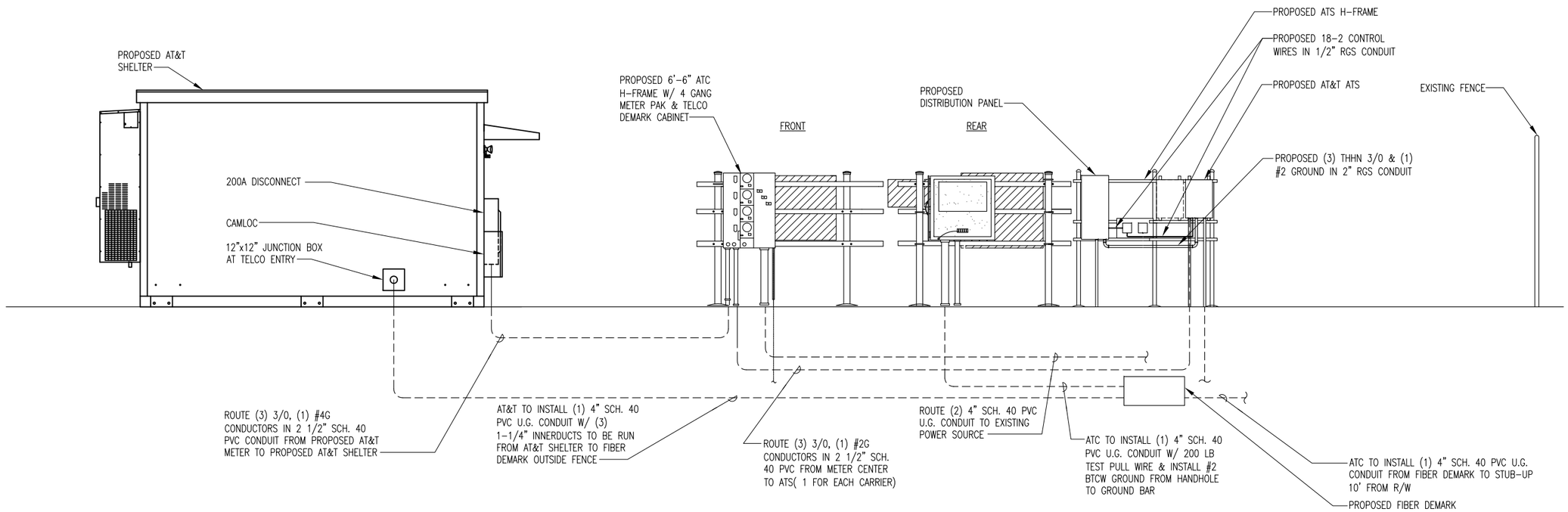

N.T.S. | PARTIAL POWER/TELCO RISER DIAGRAM FOR NEW EQUIPMENT | 1

CITY OF WILMINGTON NORTH CAROLINA
Public Services • Engineering Division
APPROVED PLAN – NO PERMIT REQUIRED
Signed: _____

NOTES

1. BOND ANTENNA GROUNDING KIT CABLE TO GROUND BAR.
2. #2 (SOLID TINNED) BCW BURIED GROUND RING.
3. FOR GROUNDING CONNECTION & DETAILS, SEE LAYOUT DRAWINGS
4. INSTALL GROUND RODS AT LOCATIONS AS SHOWN ON GROUNDING PLAN.
5. INTERIOR GROUND RING FOR EQUIPMENT BY SHELTER MANUFACTURER.
6. ICE BRIDGE TO BE ISOLATED FROM TOWER MIN. OF 4".
7. BOND GROUND BAR TO TOWER.

APPROVED CONSTRUCTION PLAN

	NAME	DATE
PLANNING		
TRAFFIC		
FIRE		

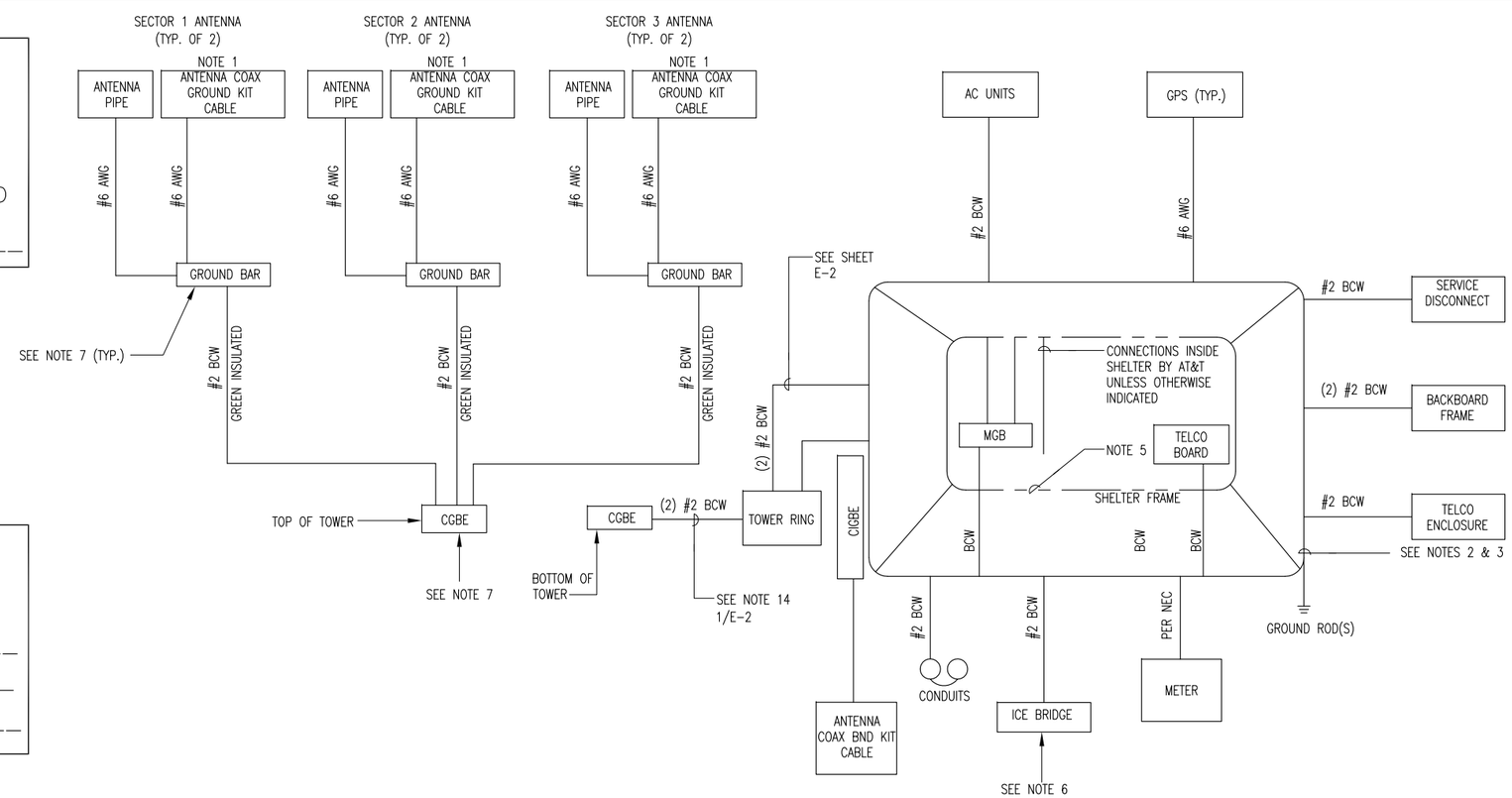

N.T.S. | SCHEMATIC DIAGRAM – GROUNDING SYSTEMS | 2

AMERICAN TOWER® CORPORATION
496 LONG POINT ROAD
MOUNT PLEASANT, SC 29464
TEL.: (843) 971-8385
FAX: (843) 971-8889

THESE DRAWINGS AND/OR THE ACCOMPANYING SPECIFICATION AS INSTRUMENTS OF SERVICE, ARE THE EXCLUSIVE PROPERTY OF AMERICAN TOWER CORPORATION AND THEIR USE AND PUBLICATION SHALL BE RESTRICTED TO THE ORIGINAL SITE FOR WHICH THEY ARE PREPARED. REUSE, REPRODUCTION OR PUBLICATION BY ANY METHOD, IN WHOLE OR IN PART, IS PROHIBITED EXCEPT BY WRITTEN PERMISSION FROM AMERICAN TOWER CORPORATION TITLE TO THESE PLANS AND/OR SPECIFICATIONS SHALL REMAIN WITH AMERICAN TOWER CORPORATION WITHOUT PREJUDICE AND VISUAL CONTACT WITH THEM SHALL CONSTITUTE PRIMA FACIE EVIDENCE OF ACCEPTANCE OF THESE RESTRICTIONS.

BC architects engineers
5661 COLUMBIA PIKE, SUITE 200
FALLS CHURCH, VA 22041-2868
TEL: (703) 671-6000
FAX: (703) 671-6300

SHEET REVISION

NO.	DESCRIPTION	BY	DATE
1			
2			
3			
4			
5			
6			

ATC SITE NUMBER:
275164
ATC SITE NAME:
MAC RAE PARK NC
SITE ADDRESS:
4417 LAKE AVE.
WILMINGTON, NC 28409

STAMP HERE:
NORTH CAROLINA PROFESSIONAL SEAL 0024902 ENGINEER CHRISTOPHER D. MORIN
9.15.14

DRAWN BY:	AGT
CHECKED BY:	DRS
DATE DRAWN:	03-24-14
SUBMISSION:	FINAL CD'S

SHEET TITLE:
AT&T ELECTRICAL DETAILS

SHEET NUMBER: **E-8**
REV. #

02-11-14 VICTOR GARCIA 10:45:38 Y:/Drawings – 2013/ATC/Mac Rae Park NC – 275164/_CD's_2014.02.10/E8.dwg

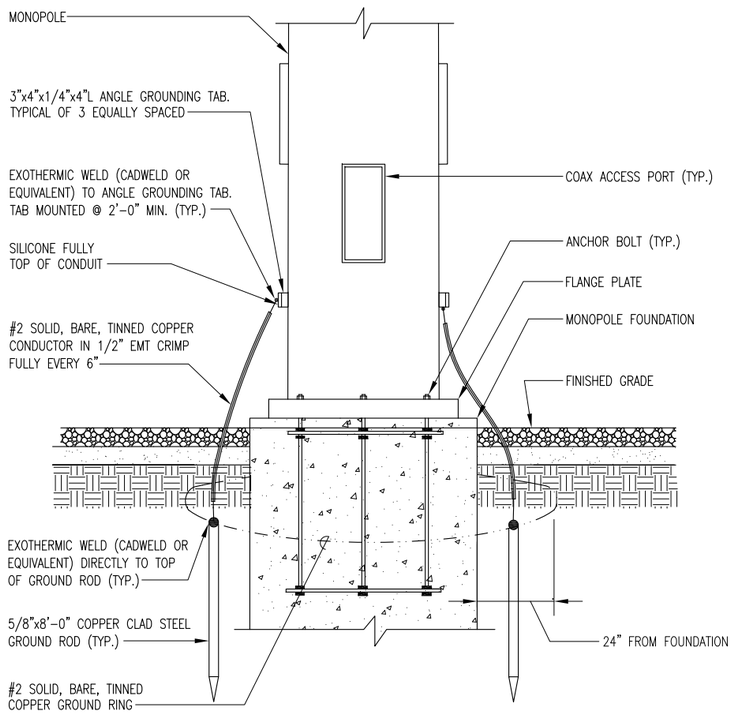

N.T.S. | TOWER GROUNDING DETAIL WITH FOOTING | 1

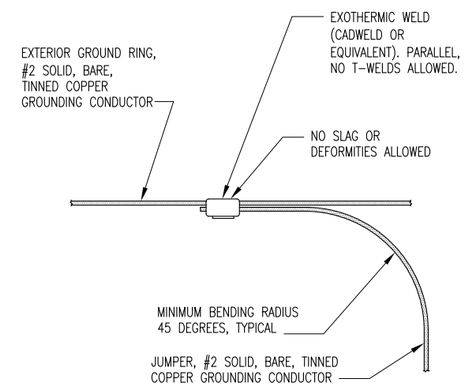

N.T.S. | GROUND RING DETAIL | 2

CITY OF WILMINGTON NORTH CAROLINA
Public Services Engineering Division
APPROVED PLAN - NO PERMIT REQUIRED
Signed: _____

APPROVED CONSTRUCTION PLAN

	NAME	DATE
PLANNING		
TRAFFIC		
FIRE		

AMERICAN TOWER® CORPORATION
496 LONG POINT ROAD
MOUNT PLEASANT, SC 29464
TEL.: (843) 971-8385
FAX: (843) 971-8889

THESE DRAWINGS AND/OR THE ACCOMPANYING SPECIFICATION AS INSTRUMENTS OF SERVICE, ARE THE EXCLUSIVE PROPERTY OF AMERICAN TOWER CORPORATION AND THEIR USE AND PUBLICATION SHALL BE RESTRICTED TO THE ORIGINAL SITE FOR WHICH THEY ARE PREPARED. REUSE, REPRODUCTION OR PUBLICATION BY ANY METHOD, IN WHOLE OR IN PART, IS PROHIBITED EXCEPT BY WRITTEN PERMISSION FROM AMERICAN TOWER CORPORATION TITLE TO THESE PLANS AND/OR SPECIFICATIONS SHALL REMAIN WITH AMERICAN TOWER CORPORATION WITHOUT PREJUDICE AND VISUAL CONTACT WITH THEM SHALL CONSTITUTE PRIMA FACIE EVIDENCE OF ACCEPTANCE OF THESE RESTRICTIONS.

BC architects engineers
5661 COLUMBIA PIKE, SUITE 200
FALLS CHURCH, VA 22041-2868
TEL: (703) 671-6000
FAX: (703) 671-6300

SHEET REVISION

NO.	DESCRIPTION	BY	DATE
1			
2			
3			
4			
5			
6			

ATC SITE NUMBER:
275164
ATC SITE NAME:
MAC RAE PARK NC
SITE ADDRESS:
4417 LAKE AVE.
WILMINGTON, NC 28409

STAMP HERE:
NORTH CAROLINA PROFESSIONAL SEAL 0024902 ENGINEER CHRISTOPHER D. MORIN
9.15.14

DRAWN BY:	AGT
CHECKED BY:	DRS
DATE DRAWN:	03-24-14
SUBMISSION:	FINAL CD'S

SHEET TITLE:
ELECTRICAL DETAILS

SHEET NUMBER: **E-9**
REV. #

02-11-14 VICTOR GARCIA 10:45:59 Y:/Drawings - 2013/ATC/Mac Rae Park NC - 275164/_CD's_2014.02.10/E9.dwg

NOTES:

1. UNLESS OTHERWISE NOTED, ALL UNDERGROUND PVC TO BE SCH 40. ALL OTHER UNDERGROUND PVC CONNECTIONS TO BE SCH 80.
2. ALL ABOVE GRADE PVC TO BE SCH 40. ALL CONNECTIONS TO BE SCH 40 PVC OR SEALTIGHT. VERIFY WITH CONSTRUCTION MANAGER PRIOR TO BID.
3. ALL WIRE CONNECTIONS & CONDUITS TO BE SUPPLIED BY CONTRACTOR UNLESS OTHERWISE NOTED OR SPECIFIED BY CONSTRUCTION MANAGER.
4. ALL AT&T CONDUITS SHALL TRANSITION BELOW GRADE AT ELBOW FROM PVC TO RGS ABOVE GRADE.
5. TELCO DEMARK CABINET SIZE MAY BE DETERMINED BY LOCAL TELCO PROVIDER.

PARTS LIST – O.F.C.I.

ITEM	SPECIFICATION	DESCRIPTION	QTY.
1	SCH. 40	84" x 3.5" O.D. RIGID GALVANIZED PIPE	2
2	P1000 T	1 5/8" SLOTTED UNISTRUT CHANNEL	6
3		3-1/2" O.D. PIPE CAP	2
4		1/2 x 3-5/8 x 5" GALV. U-BOLT ASSY.	6
5		3/8" GALV. FLAT WASHER	12

1. INSTALL H- FRAME AS DETAILED IN EXHIBIT A- 1. THIS IS A STANDARD DRAWING & ELECTRICAL EQUIPMENT IS TO BE SQUARE "D" OR APPROVED EQUAL & MAIN BUSS RATING SHALL BE 600 AMPS. FINAL CONFIGURATION SHALL BE (4) 200 AMP METERS AVAILABLE. AN AREA OF 3' X 3' SHALL BE SET ASIDE ON THE H-FRAME FOR FUTURE LIGHTING CONTROLLER INSTALLATION.
2. INSTALL (2) 4" SCH 40 PVC CONDUITS FROM MAIN METER PAK TO POWER DEMARK LOCATION DETERMINED BY POWER COMPANY. CONTRACTOR SHALL INSTALL PULL- STRINGS IN EACH CONDUIT AS REQUIRED. DISTANCE NOT TO EXCEED 150'. MINIMUM DEPTH OF 48" AND CONTRACTOR SHALL INSTALL WIRE- REINFORCED WARNING TAPE 12" BELOW SURFACE.
3. INSTALL (1) 4" SCH 40 PVC CONDUIT FROM TELCO CABINET TO FIBER DEMARK LOCATION, DETERMINED BY LOCAL TELEPHONE SERVICE PROVIDER. CONTRACTOR SHALL INSTALL (1) 200# PULL- CORDS & #2 SOLID BCTW IN THE CONDUIT. DISTANCE NOT TO EXCEED 150'. MINIMUM DEPTH OF 36" AND CONTRACTOR SHALL INSTALL WIRE- REINFORCED WARNING TAPE 12" BELOW SURFACE.
4. CONNECT #2 SOLID TINNED COPPER TO H- FRAME POSTS VIA EXOTHERMIC WELD AND CONNECT #2 SOLID TINNED COPPER LEADS TO EXISTING GROUND RING FOR SITE AND TOWER VIA EXOTHERMIC WELD.
5. INSTALL SERVICE ENTRANCE GROUND ROD AT LOCATION WHERE MAIN TERMINAL BOX IS MOUNTED ON H- FRAME. PROVIDE INSPECTION WELL AT GROUND ROD LOCATION FOR INSPECTION REQUIREMENTS.
6. LABEL METER CENTERS PER POWER COMPANY REQUIREMENTS. IF NO REQUIREMENTS, LABEL EACH SLOT STARTING FROM TOP SLOT "A"1D, "B", & "C". :LABELS SHALL BE ULTRA- VIOLET RESISTANT. METER "A" SHALL BE RESERVED FOR AT&T. METER SHALL ALSO HAVE A LABEL STATING "AT&T".

UTILITY SCOPE OF WORK

APPROVED CONSTRUCTION PLAN

NAME DATE

PLANNING_____

TRAFFIC_____

FIRE_____

CITY OF WILMINGTON NORTH CAROLINA

Public Services Engineering Division

APPROVED PLAN - NO PERMIT REQUIRED

Signed: _____

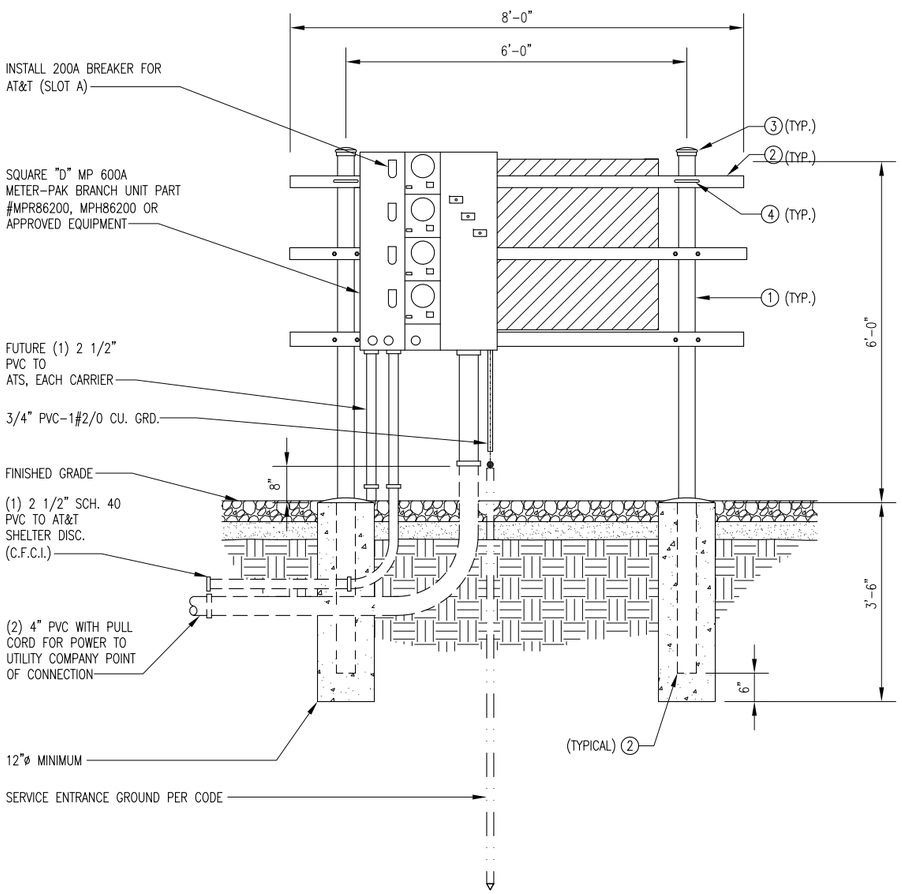

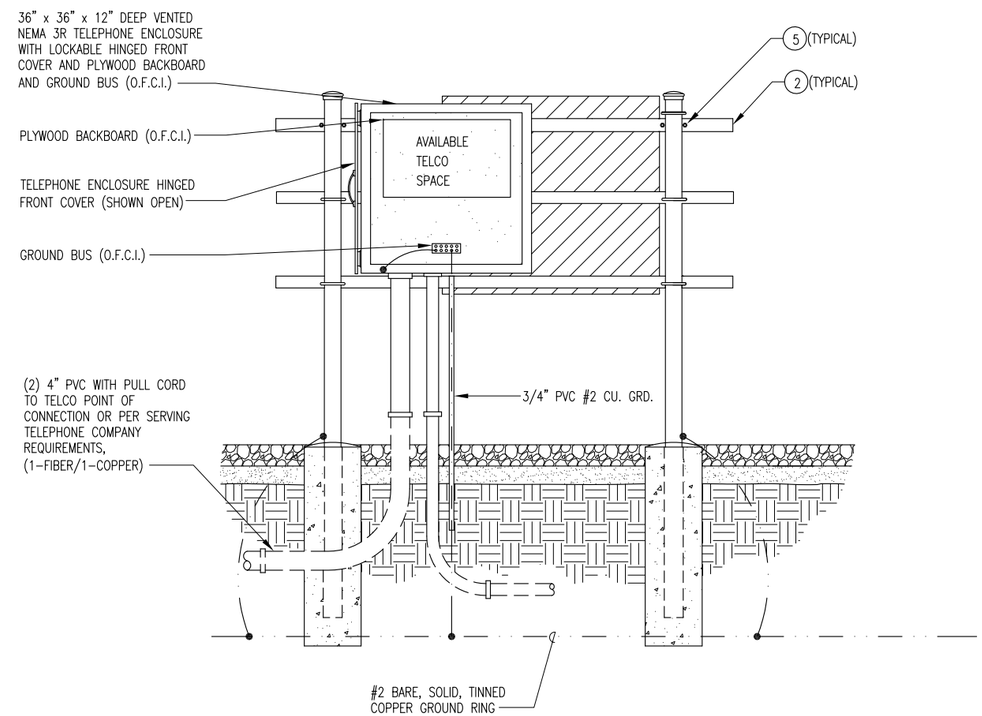

N.T.S. | UTILITY SERVICE H-FRAME – FRONT AND REAR ELEVATIONS | 1

AMERICAN TOWER® CORPORATION
496 LONG POINT ROAD
MOUNT PLEASANT, SC 29464
TEL.: (843) 971-8385
FAX: (843) 971-8889

THESE DRAWINGS AND/OR THE ACCOMPANYING SPECIFICATION AS INSTRUMENTS OF SERVICE, ARE THE EXCLUSIVE PROPERTY OF AMERICAN TOWER CORPORATION AND THEIR USE AND PUBLICATION SHALL BE RESTRICTED TO THE ORIGINAL SITE FOR WHICH THEY ARE PREPARED. REUSE, REPRODUCTION OR PUBLICATION BY ANY METHOD, IN WHOLE OR IN PART, IS PROHIBITED EXCEPT BY WRITTEN PERMISSION FROM AMERICAN TOWER CORPORATION TITLE TO THESE PLANS AND/OR SPECIFICATIONS SHALL REMAIN WITH AMERICAN TOWER CORPORATION WITHOUT PREJUDICE AND VISUAL CONTACT WITH THEM SHALL CONSTITUTE PRIMA FACIE EVIDENCE OF ACCEPTANCE OF THESE RESTRICTIONS.

BC architects engineers
5661 COLUMBIA PIKE, SUITE 200
FALLS CHURCH, VA 22041-2868
TEL: (703) 671-6000
FAX: (703) 671-6300

SHEET REVISION

NO.	DESCRIPTION	BY	DATE
1			
2			
3			
4			
5			
6			

ATC SITE NUMBER:
275164

ATC SITE NAME:
MAC RAE PARK NC

SITE ADDRESS:
4417 LAKE AVE.
WILMINGTON, NC 28409

STAMP HERE:
NORTH CAROLINA PROFESSIONAL SEAL 0024902 ENGINEER CHRISTOPHER D. MORIN
9.15.14

DRAWN BY:	AGT
CHECKED BY:	DRS
DATE DRAWN:	03-24-14
SUBMISSION:	FINAL CD'S

SHEET TITLE:
ELECTRICAL DETAILS AND NOTES

SHEET NUMBER: E-10

REV. #

02-11-14 VICTOR GARCIA 16:51:02 Y:/Drawings - 2013/ATC/Mac Rae Park NC - 275164/_CD's_2014.02.10/E10.dwg

APPROVED CONSTRUCTION PLAN

NAME DATE

PLANNING_____

TRAFFIC_____

FIRE_____

CITY OF WILMINGTON NORTH CAROLINA

Public Services Engineering Division

APPROVED PLAN - NO PERMIT REQUIRED

Signed: _____

SYMBOLS LIST

(SYMBOLS SHOWN MAY NOT BE USED ON THIS PROJECT)

- CONDUIT RISER UP.
- CONDUIT RISER DOWN.
- GROUNDING CONDUCTOR.
- INDICATES CIRCUIT CONTINUATION.
- ENCLOSED CIRCUIT BREAKER. SIZE AS SHOWN.
- FUSED DISCONNECT SWITCH. SIZE AS SHOWN.
- RECEPTACLE PANELBOARD, 120/240 VOLT.
- (1) NOTES: REFERENCE SYMBOLS: DENOTES "SEE NOTE NO. 1."
- +18" INDICATES MOUNTING HEIGHT AFF.
- (E) EXISTING ELEC EQUIPMENT TO REMAIN.

ABBREVIATIONS

A, AMP	AMPERE	kVA	KILOVOLT AMPS
AFF	ABOVE FINISHED FLOOR	kWH	KILOWATT HOURS
AN	ANTENNA	L	LENGTH
AWG	AMERICAN GAUGE WIRE	LB	POUND
C	CONDUIT	MAX	MAXIMUM
CAB	CABINET	M.L.O.	MAIN LUG ONLY
C/B	CIRCUIT BREAKER	N	NEUTRAL
CKT	CIRCUIT	NEC	NATIONAL ELECTRICAL CODE
COAX	COAXIAL	NO.	NUMBER
CO	COMPANY	NTS	NOT TO SCALE
CONTR	CONTRACTOR	O.C.	ON CENTER
D	DEPTH	P	POLE
db	DECIBEL	R.G.S.	RIGID GALVANIZED STEEL
DEG	DEGREE	SCH	SCHEDULE
DESCRIP	DESCRIPTION	SWBD	SWITCHBOARD
DIA	DIAMETER	TEL	TELEPHONE
DWG	DRAWING	(TYP)	TYPICAL
ECB	ENCLOSED CIRCUIT BREAKER	UL	UNDERWRITER'S LABORATORY
ELEC	ELECTRICAL	V	VOLT
(E)	EXISTING	W	WIDTH OR WIRE
FT	FEET	XFMR	TRANSFORMER
G	GROUND		
IN	INCH		

ELECTRICAL SPECIFICATION

1. FURNISH ALL LABOR, MATERIALS, TOOLS, EQUIPMENT SERVICES FOR ALL ELECTRICAL WORK AS INDICATED IN ACCORD WITH PROVISIONS OF CONTRACT DOCUMENTS. COORDINATE WITH WORK OF ALL OTHER TRADES. FURNISH AND INSTALL ALL SUPPLEMENTARY OR MISCELLANEOUS ITEMS AND DEVICES TO SECURE AND COMPLETE INSTALLATION.
2. FOR EXACT LOCATIONS OF BUILDING ELEMENTS, REFER TO ARCHITECTURAL DWG'S. FIELD VERIFY LOCATIONS AND ARRANGEMENT OF ALL EXISTING SYSTEMS AND EQUIPMENT.
3. ALL EXTERIOR DEVICES AND EQUIPMENT SHALL BE WEATHERPROOF, NEMA-3R.
4. PERFORM ALL WORK IN ACCORD WITH FOLLOWING CODES:
   1. FEDERAL, STATE AND LOCAL CODES, REGULATIONS AND ORDINANCES.
   2. NATIONAL ELECTRICAL CODE (NEC), 2011 EDITION.
   3. ALL AUTHORITIES HAVING JURISDICTION.
5. USE UL LABELED ELECTRICAL MATERIALS WHERE LISTING HAS BEEN ESTABLISHED FOR MATERIALS OR DEVICES IN QUESTION.
6. SAFETY SWITCH: HEAVY DUTY TYPE IN NEMA-1 ENCLOSURE, NEMA-3R IN DAMP OR WET LOCATIONS.
7. CONDUIT: ALL ELECTRIC METALLIC TUBING CONNECTORS SHALL BE COMPRESSION TYPE (NO POT-METAL AND SET SCREW), MIN. 3/4". USE FLEXIBLE METAL (STEEL) CONDUIT FOR CONNECTION TO ALL VIBRATING EQUIPMENT AND CASEWORK.
8. WIRE IN CONDUIT SIZES #10 AWG AND SMALLER SHALL BE SOLID COPPER WITH TYPE THWN/THHN 600 VOLT INSULATION. THE MIN. CONDUCTOR SIZE SHALL BE NO. 12 AWG. CONTROL WIRING MAY BE NO. 14 AWG. A GROUND WIRE SHALL BE INSTALLED IN ALL CIRCUITS. WIRE OF SIZES 8 AWG AND LARGER SHALL BE STRANDED COPPER WITH TYPE XHHW, THW OR THHN 600 VOLT INSULATION. SPLICES FOR WIRE SIZES #10 AWG AND SMALLER SHALL BE CONICAL SPRING TYPE DEVICES. WIRE SIZES OF #8 AWG AND LARGER SHALL HAVE SPLIT-BOLT CONNECTORS WITH SUFFICIENT LAYERS OF TAPE TO EQUAL INSULATION OF WIRE BEING SPLICED.
9. PROVIDE NAMEPLATES ON ALL PIECES OF ELECTRICAL EQUIPMENT, SUCH AS, CIRCUIT BREAKERS, DISCONNECT SWITCHES, PANELBOARDS, ALL PULL BOXES. NAMEPLATES SHALL BE ENGRAVED WITH WHITE LETTERS ON A BLUE FIELD, 2-1/2"X3/4" WITH 1/4" HIGH (MIN.) LETTERS. PLATE MATERIAL SHALL BE TOUGH MULTI-LAYERED ACRYLIC (1/8" THICK MIN.) "SETONFLEX" TO WITHSTAND EXTREME INDOOR AND OUTDOOR TEMPERATURES. PLATE SHALL HAVE PRESSURE SENSITIVE ADHESIVE BACKING SUITABLE FOR OUTDOORS.
10. THE EQUIPMENT SHALL BE PROVIDED BY AS A PREFABRICATED PACKAGED UNIT. THE CONTRACTOR IS TO PROVIDE ALL OTHER EQUIPMENT, CONDUIT AND CABLING FOR A COMPLETE JOB.
11. ALL TERMINATIONS SHALL BE LISTED AND IDENTIFIED FOR USE WITH 75°C RATED CONDUCTORS.
12. POWER COMPANY OR THE CONTRACTOR WHERE REQUIRED BY THE POWER COMPANY, SHALL TERMINATE THE POWER CABLES (SUPPLIED BY THE POWER CO.) AT THE UTILITY METER.
13. CONDUIT LINES SHALL HAVE A CONTINUOUS SLOPE DOWNWARD AND AWAY FROM THE SHELTER TO THE PROPERTY LINE SO THAT WATER WILL FLOW AWAY FROM THE SHELTER. TRENCHES SHALL BE EXCAVATED ALONG STRAIGHT LINES BEFORE CONDUITS ARE LAID SO THE ELEVATION CAN BE ADJUSTED, IF NECESSARY, TO AVOID UNSEEN OBSTRUCTIONS. MANUFACTURED BENDS SHALL HAVE A MIN. RAD. 36" FOR CONDUITS.
14. BENDS SHALL HAVE A MINIMUM RADIUS 36" FOR CONDUITS. ALL CONDUITS ENTERING THE SHELTER SHALL BE SEALED WITH SEALANTS THAT ARE IDENTIFIED FOR USE WITH THE CABLE INSULATION, SHIELD, OR OTHER COMPONENTS. A BEAD OF SILICONE SHALL BE PLACED AROUND ALL CONDUIT PENETRATIONS INTO THE SHELTER.
15. METER SOCKET TO BE SUPPLIED BY OR AS PER POWER COMPANY REQUIREMENTS.
16. GROUND FAULT PROTECTION IS REQUIRED FOR ANY UTILITY RECEPTACLES.
17. WHITE/NEUTRAL, GREEN/GROUND, SHALL BE MAINTAINED THROUGHOUT THE SITE ELECTRICAL SYSTEM.

CABLE WORKS GENERAL NOTES

1. ALL COAX CABLE SHALL BE INSTALLED WITH A "DRIP LOOP" WHEN TURNING FROM VERTICAL TO HORIZONTAL. JUMPER LENGTH SHALL NOT EXCEED 6' ON EACH SIDE OF FEEDER.
2. ALL COAX CABLES SHALL BE RFS CELLFLEX SERIES. ALL CONNECTORS TO BE 7/16 DIN FEMALE CAPTIVATED. ALL JUMPERS SHALL BE LCF SERIES (NO SUPERFLEX) 7/16 MALE DIN TO 7/16 MALE DIN AND SHALL BE 6' LONG MAX. (UNLESS IMPOSSIBLE). ALL EXTERIOR CONNECTIONS SHALL BE WATERPROOF TAPED
3. ALL ANTENNA MOUNTS MUST BE GROUNDED. ALL COAX FEEDER CABLE MUST BE GROUNDED WITHIN 10' MAX. (PREFERRED WITH 2"-0") OF CONNECTOR. PROVIDE GROUND BAR AT EACH SECTOR. GRIPSTRUT SHALL BE GROUNDED AT EQUIPMENT END AND ANTENNA END TO GROUND BARS. GRIPSTRUT SHALL BE JUMPED BETWEEN SECTIONS. PROVIDE GROUND KIT AT SHELTER.
4. FOR MONOPOLES - ALL CABLES SHALL RUN ON INSIDE OF MONOPOLE, CABLE LADDER OR STANDOFFS. PROVIDE CABLE SUPPORTS EVERY 4' FOR 1-5/8" CABLE; EVERY 4' FOR 7/8" CABLE. GROUNDING AS FOLLOWS:
   - KIT AT TOP PRIOR TO TURN DOWN
   - KIT AT BOTTOM BEFORE HORIZONTAL TURN
   - KIT AT EQUIPMENT
   - BOND ICEBRIDGE (TOWER AND EQUIPMENT SIDE)
5. ALL SHELTER & ASSOCIATED EQUIPMENT SHALL BE GROUNDED BY EQUIPMENT MANUFACTURER REPRESENTATIVE.

GENERAL NOTES TO ELECTRICAL CONTRACTOR

1. THE CONTRACTOR SHALL PROVIDE (FURNISH AND INSTALL) ALL NECESSARY CONDUITS, WIRING AND OUTLET BOXES TO SUPPORT THE AMERICAN TOWER FURNISHED ITEMS.
2. PROVIDE WIRING IN CONDUIT IN ACCORDANCE WITH MANUFACTURER'S RECOMMENDATION AND N.E.C.
3. FOR LOCATION OF NEW EQUIPMENT & ANTENNAS. SEE ARCHITECTURAL DWG'S.
4. COORDINATE IN ADVANCE ALL WORK TO BE DONE WITH POWER UTILITY CO.
5. THE CONTRACTOR SHALL BE RESPONSIBLE FOR MAKING ALL CONNECTIONS AND MAKING A COMPLETE OPERATIONAL SYSTEM AS APPROVED BY AMERICAN TOWER REPRESENTATIVE.
6. THE CONTRACTOR SHALL CONFER, COORDINATE, AND COMPLY WITH RECOMMENDATIONS MADE BY THE NEW EQUIPMENT MANUFACTURER'S REPRESENTATIVE
7. ELECTRICAL CONTRACTOR TO INCLUDE THE FINAL CONNECTION WORK AND REQUIRED PERMITTING AND INSPECTIONS TO COMPLETE THE POWER AND TELEPHONE CONNECTION TO EQUIPMENT SHELTER. COORDINATE WITH THE GENERAL CONTRACTOR FOR EQUIPMENT SHELTER.
8. PRIOR TO ANY WORK OR ORDERING OF ANY MATERIALS, THE CONTRACTOR SHALL VERIFY THAT THE EXISTING SERVICE VOLTAGE IS THE SAME VOLTAGE AS SHOWN FOR THE NEW EQUIPMENT. IF THE VOLTAGES ARE THE SAME THE CONTRACTOR MAY PROCEED, IF DIFFERENT, THE CONTRACTOR SHALL NOTIFY AMERICAN TOWER MANAGER IMMEDIATELY AND OBTAIN FURTHER DIRECTION.

AMERICAN TOWER CORPORATION
496 LONG POINT ROAD
MOUNT PLEASANT, SC 29464
TEL.: (843) 971-8385
FAX: (843) 971-8889

THESE DRAWINGS AND/OR THE ACCOMPANYING SPECIFICATION AS INSTRUMENTS OF SERVICE, ARE THE EXCLUSIVE PROPERTY OF AMERICAN TOWER CORPORATION AND THEIR USE AND PUBLICATION SHALL BE RESTRICTED TO THE ORIGINAL SITE FOR WHICH THEY ARE PREPARED. REUSE, REPRODUCTION OR PUBLICATION BY ANY METHOD, IN WHOLE OR IN PART, IS PROHIBITED EXCEPT BY WRITTEN PERMISSION FROM AMERICAN TOWER CORPORATION TITLE TO THESE PLANS AND/OR SPECIFICATIONS SHALL REMAIN WITH AMERICAN TOWER CORPORATION WITHOUT PREJUDICE AND VISUAL CONTACT WITH THEM SHALL CONSTITUTE PRIMA FACIE EVIDENCE OF ACCEPTANCE OF THESE RESTRICTIONS.

BC architects engineers
5661 COLUMBIA PIKE, SUITE 200
FALLS CHURCH, VA 22041-2868
TEL: (703) 671-6000
FAX: (703) 671-6300

SHEET REVISION

NO.	DESCRIPTION	BY	DATE
1			
2			
3			
4			
5			
6			

ATC SITE NUMBER:
275164
ATC SITE NAME:
MAC RAE PARK NC
SITE ADDRESS:
4417 LAKE AVE.
WILMINGTON, NC 28409

STAMP HERE:
NORTH CAROLINA PROFESSIONAL SEAL 0024902 ENGINEER CHRISTOPHER D. MORIN
9.15.14

DRAWN BY:	AGT
CHECKED BY:	DRS
DATE DRAWN:	03-24-14
SUBMISSION:	FINAL CD'S

SHEET TITLE:

ELECTRICAL NOTES

SHEET NUMBER: E-11 REV. #

02-11-14 VICTOR GARCIA 10:46:47 Y:/Drawings - 2013/ATC/Mac Rae Park NC - 275164/_CD's_2014.02.10/E11.dwg

SD050

CUSTOM MODEL

GENERAC | INDUSTRIAL POWER

Industrial Diesel Generator Set

EPA Emissions Certification: Tier III

50 kW Diesel

Standby Power Rating
50KW 60 Hz

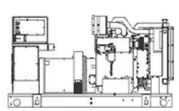

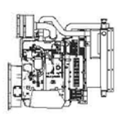

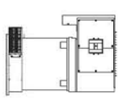

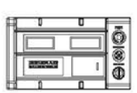

features	benefits
Generator Set	
• PROTOTYPE & TORSIONALLY TESTED	▶ PROVIDES A PROVEN UNIT
• UL2200 TESTED	▶ ENSURES A QUALITY PRODUCT
• RHINOCOAT PAINT SYSTEM	▶ IMPROVES RESISTANCE TO ELEMENTS
• SOUND LEVEL 2 ENCLOSURE	▶ 71dbA @ 7 METERS (23FT)
Engine	
• EPA TIER CERTIFIED	▶ ENVIRONMENTALLY FRIENDLY
• INDUSTRIAL TESTED, GENERAC APPROVED	▶ ENSURES INDUSTRIAL STANDARDS
• POWER-MATCHED OUTPUT	▶ ENGINEERED FOR PERFORMANCE
• INDUSTRIAL GRADE	▶ IMPROVES LONGEVITY AND RELIABILITY
Alternator	
• TWO-THIRDS PITCH	▶ ELIMINATES HARMFUL 3RD HARMONIC
• LAYER WOUND ROTOR & STATOR	▶ IMPROVES COOLING
• CLASS H MATERIALS	▶ HEAT TOLERANT DESIGN
• DIGITAL 3-PHASE VOLTAGE CONTROL	▶ FAST AND ACCURATE RESPONSE
Controls	
• ENCAPSULATED BOARD W/ SEALED HARNESS	▶ EASY, AFFORDABLE REPLACEMENT
• 4-20mA VOLTAGE-TO-CURRENT SENSORS	▶ NOISE RESISTANT 24/7 MONITORING
• SURFACE-MOUNT TECHNOLOGY	▶ PROVIDES VIBRATION RESISTANCE
• ADVANCED DIAGNOSTICS & COMMUNICATIONS	▶ HARDENED RELIABILITY

primary codes and standards

GENERAC | INDUSTRIAL POWER

SD050 application and engineering data

50 kW Diesel

ENGINE SPECIFICATIONS

General	
Make	Iveco / FPT
EPA Emissions Compliance	Tier III
EPA Emissions Reference	See Emissions Data Sheet
Cylinder #	4
Type	Diesel
Displacement - L (cu. in.)	4.5 (274)
Bore - mm (in.)	105 (4.1)
Stroke - mm (in.)	132 (5.2)
Compression Ratio	17.5:1
Intake Air Method	Turbocharged
Cylinder Head Type	2 Valve
Piston Type	Aluminum
Crankshaft Type	Forged Steel
Engine Block Type	Cast Iron / Wet Sleeve

Engine Governing	
Governor	Electronic Isochronous
Frequency Regulation (Steady State)	+/- 0.25%

Lubrication System	
Oil Pump Type	Gear
Oil Filter Type	Full Flow
Crankcase Capacity - L (gal)(qts)	13.6 (3.6) (14.4)

Cooling System	
Cooling System Type	Closed
Water Pump	Belt Driven Centrifugal
Fan Type	Pusher
Fan Blade Number	2538 (10)
Fan Diameter (in.)	26
Coolant Heater Wattage	1500
Coolant Heater Standard Voltage	120

Fuel System	
Fuel Type	Ultra Low Sulfur Diesel Fuel
Fuel Specifications	ASTM
Fuel Filtering (microns)	5
Fuel Inject Pump Make	Standyne
Fuel Pump Type	Engine Driven Gear
Injector Type	Mechanical
Engine Type	Direct Injection
Fuel Supply Line - mm (in.)	1/4 inch Npt
Fuel Return Line - mm (in.)	1/4 inch Npt

Engine Electrical System	
System Voltage	12VDC
Battery Charging Alternator	90 Amp
Battery Size (at 0 oC)	Optima Redtop
Battery Group	34
Battery Voltage	12VC
Ground Polarity	Negative

ALTERNATOR SPECIFICATIONS

Standard Model	390
Poles	4
Field Type	Revolving
Insulation Class - Rotor	H
Insulation Class - Stator	H
Total Harmonic Distortion	< 3.5%
Telephone Interference Factor (TIF)	< 50
Standard Excitation	PMG
Bearings	Single Sealed Cartridge
Coupling	Direct, Flexible Disc
Load Capacity - Standby	100%
Load Capacity - Prime	100%
Prototype Short Circuit Test	Y

Voltage Regulator Type	Digital
Number of Sensed Phases	All
Regulation Accuracy (Steady State)	+/- 0.25%

CODES AND STANDARDS COMPLIANCE (WHERE APPLICABLE)

NFPA 99
NFPA 110
ISO 8528-5
ISO 1708A5
ISO 3046
BS5514
SAE J1349
DIN6271
IEEE C62.41 TESTING
NEMA ICS 1

Rating Definitions:
Standby – Applicable for a varying emergency load for the duration of a utility power outage with no overload capability. (Average load factor 70%)
Prime – Applicable for supplying power to a varying load in lieu of utility for an unlimited amount of running time. (Average load factor – 80% of prime rated capacity is available for 1 hour every 12 hours.

APPROVED CONSTRUCTION PLAN

NAME _____ DATE _____

PLANNING _____

TRAFFIC _____

FIRE _____

CITY OF WILMINGTON NORTH CAROLINA
Public Services • Engineering Division
APPROVED PLAN – NO PERMIT REQUIRED
Signed: _____

AMERICAN TOWER® CORPORATION
496 LONG POINT ROAD
MOUNT PLEASANT, SC 29464
TEL.: (843) 971–8385
FAX: (843) 971–8889

THESE DRAWINGS AND/OR THE ACCOMPANYING SPECIFICATION AS INSTRUMENTS OF SERVICE, ARE THE EXCLUSIVE PROPERTY OF AMERICAN TOWER CORPORATION AND THEIR USE AND PUBLICATION SHALL BE RESTRICTED TO THE ORIGINAL SITE FOR WHICH THEY ARE PREPARED. REUSE, REPRODUCTION OR PUBLICATION BY ANY METHOD, IN WHOLE OR IN PART, IS PROHIBITED EXCEPT BY WRITTEN PERMISSION FROM AMERICAN TOWER CORPORATION TITLE TO THESE PLANS AND/OR SPECIFICATIONS SHALL REMAIN WITH AMERICAN TOWER CORPORATION WITHOUT PREJUDICE AND VISUAL CONTACT WITH THEM SHALL CONSTITUTE PRIMA FACIE EVIDENCE OF ACCEPTANCE OF THESE RESTRICTIONS.

BC architects engineers
5661 COLUMBIA PIKE, SUITE 200
FALLS CHURCH, VA 22041–2868
TEL: (703) 671–6000
FAX: (703) 671–6300

SHEET REVISION

NO.	DESCRIPTION	BY	DATE
1			
2			
3			
4			
5			
6			

ATC SITE NUMBER:
275164
ATC SITE NAME:
MAC RAE PARK NC
SITE ADDRESS:
4417 LAKE AVE.
WILMINGTON, NC 28409

STAMP HERE:
NORTH CAROLINA PROFESSIONAL SEAL 0024902 ENGINEER CHRISTOPHER D. MORIN
9.15.14

DRAWN BY:	AGT
CHECKED BY:	DRS
DATE DRAWN:	03–24–14
SUBMISSION:	FINAL CD'S

SHEET TITLE:
PROPOSED 50KW GENERATOR DETAILS

SHEET NUMBER: **GEN–1** REV. #

03–24–14 ARNOLD 10:04:59 Y:/Drawings – 2013/ATC/Mac Rae Park NC – 275164/_CD's_2014.02.10/GEN1.dwg

CITY OF WILMINGTON NORTH CAROLINA

Public Services • Engineering Division

APPROVED PLAN – NO PERMIT REQUIRED

Signed: _____

APPROVED CONSTRUCTION PLAN

NAME	DATE
PLANNING	
TRAFFIC	
FIRE	

GENERAC | INDUSTRIAL POWER

50 kW Diesel

SD050 standard features and options

4 of 5

GENERATOR SET

- Genset Vibration Isolation — Std
- Factory Testing — Std
- Extended warranty — Std
- Radiator Louvers — Std
- Steel Enclosure (Enclosed Models) — Std
- Remote Emergency Shutdown — Opt

ENGINE SYSTEM

General

- Oil Drain Extension — Std
- Air Cleaner — Std
- Industrial Exhaust Silencer (Open Sets, ship loose) — Std
- Critical Exhaust Silencer (Enclosed Sets) — Std
- Stainless steel flexible exhaust connection — Std

Fuel System

- Primary Fuel Filter with Water Separator — Std
- Flexible Fuel Lines — Std
- UL142 Fuel Tank, 48 Hr Runtime — Std
- 2 Gal Overflow Containment with Alarm — Std

Cooling System

- 120VAC Coolant Heater (3-wire connection core) — Std
- 50%/50% Coolant — Std
- Level 1 Guarding (Open Sets) — Std
- Closed Coolant Recovery System — Std
- UV/Ozone resistant hoses — Std
- Factory-Installed Radiator — Std
- Radiator Drain Extension — Std
- Fan guard — Std
- Radiator duct adapter (Open Sets) — Std

Engine Electrical System

- Battery charging alternator — Std
- Battery cables — Std
- Battery tray — Std
- 75W 120VAC Battery heater — Std
- Solenoid activated starter motor — Std
- 10A UL float/equalize battery charger — Std
- Weather Resistant electrical connections — Std
- Duplex GFCI Convenience Outlet — Std

ALTERNATOR SYSTEM

- UL2200 GENprotect™ — Std
- 100% Rated 200A Main Line Circuit Breaker — Std

CONTROL SYSTEM

Control Panel

- Digital H Control Panel - Dual 4x20 Display — Std
- Programmable Crank Limiter — Std
- 7-Day Programmable Exerciser (requires H-Transfer Switch) — Std
- Special Applications Programmable PLC — Std
- RS-232 — Std
- RS-485 — Std
- All-Phase Sensing DVR — Std
- Full System Status — Std
- Utility Monitoring (Req. H-Transfer Switch) — Std
- 2-Wire Start Compatible — Std
- Power Output (kW) — Std
- Power Factor — Std
- Reactive Power — Std
- All phase AC Voltage — Std
- All phase Currents — Std
- Oil Pressure — Std
- Coolant Temperature — Std
- Coolant Level — Std
- Low Fuel Pressure Indication — Std
- Engine Speed — Std
- Battery Voltage — Std
- Frequency — Std
- Date/Time Fault History (Event Log) — Std
- UL2200 GENprotect™ — Std
- Low-Speed Exercise — Opt
- Isochronous Governor Control — Std
- -40deg C - 70deg C Operation — Std
- Weather Resistant Electrical Connections — Std
- Audible Alarms and Shutdowns — Std
- Not In Auto (Flashing Light) — Std
- On/Off/Manual Switch — Std
- E-Stop (Red Mushroom-Type) — Std
- Remote E-Stop (Break Glass-Type, Surface Mount) — -
- Remote E-Stop (Red Mushroom-Type, Surface Mount) — -
- Remote E-Stop (Red Mushroom-Type, Flush Mount) — -
- NFPA 110 Level I and II (Programmable) — Std
- Remote Communication - RS232 — Std

Alarms (Programmable Tolerances, Pre-Alarms and Shutdowns)

- Low Fuel — Std
- Oil Pressure (Pre-programmed Low Pressure Shutdown) — Std
- Coolant Temperature (Pre-programmed High Temp Shutdo — Std
- Coolant Level (Pre-programmed Low Level Shutdown) — Std
- Engine Speed (Pre-programmed Overspeed Shutdown) — Std
- Voltage (Pre-programmed Overvoltage Shutdown) — Std
- Battery Voltage — Std

Other Options

- Single Side Service

GENERAC | INDUSTRIAL POWER

50 kW Diesel

SD050 dimensions, weights and sound levels

5 of 5

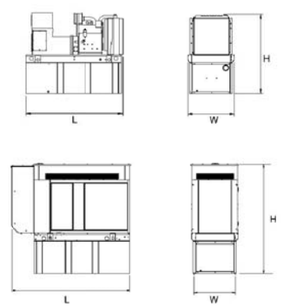

OPEN SET

TANK SIZE

RUNTIME HOURS	CAPACITY (GAL)	TANK VOLUME	L	W	H	WT	dBA*
-	-	-	-	-	-	-	84
-	-	-	-	-	-	-	
-	-	-	-	-	-	-	
-	-	-	-	-	-	-	
-	-	-	-	-	-	-	
-	-	-	-	-	-	-	
48	210	210	76	38	87	3400	
-	-	-	-	-	-	-	
-	-	-	-	-	-	-	

LEVEL 2 SOUND ENCLOSURE

TANK SIZE

RUNTIME HOURS	CAPACITY (GAL)	TANK VOLUME	L	W	H	WT	dBA*
-	-	-	-	-	-	-	71
-	-	-	-	-	-	-	
-	-	-	-	-	-	-	
-	-	-	-	-	-	-	
-	-	-	-	-	-	-	
-	-	-	-	-	-	-	
48	210	210	94.4	38	99	3635	
-	-	-	-	-	-	-	
-	-	-	-	-	-	-	

*Required gallons based on 100% of standby rating. Weights consider steel enclosure and are without fuel in tank. Sound levels measured at 23ft (7m) and does not account for ambient site conditions.

YOUR FACTORY RECOGNIZED GENERAC INDUSTRIAL DEALER

Specification characteristics may change without notice. Dimensions and weights are for preliminary purposes only. Please consult a Generac Power Systems Industrial Dealer for detailed installation drawings.

Generac Power Systems, Inc. • S45 W29290 HWY 59, Waukesha, WI 53189 • generac.com

©2010 Generac Power Systems, Inc. All rights reserved. All specifications are subject to change without notice. Bulletin 0190940SBY-A / Printed in U.S.A. 11/04/10

GENERAC | INDUSTRIAL POWER

50 kW Diesel

SD050 operating data (60Hz)

3 of 5

POWER RATINGS (kW)

	STANDBY		
Single-Phase 120/240VAC @1.0pf	50	Amps:	208
Three-Phase 120/208VAC @0.8pf	-	Amps:	-
Three-Phase 120/240VAC @0.8pf	-	Amps:	-
Three-Phase 277/480VAC @0.8pf	-	Amps:	-
Three-Phase 346/600VAC @0.8pf	-	Amps:	-

NOTE: Generator output limited to 208A.

STARTING CAPABILITIES (sKVA)

sKVA vs. Voltage Dip

Alternator*	kW	480VAC 10%	15%	20%	25%	30%	35%	208/240VAC 10%	15%	20%	25%	30%	35%
Standard	50	-	-	-	-	-	-	26	39	52	65	77	90
Upsize 1		-	-	-	-	-	-	-	-	-	-	-	-
Upsize 2		-	-	-	-	-	-	-	-	-	-	-	-

*All Generac industrial alternators utilize Class H insulation materials. Standard alternator provides less than or equal to Class B temperature rise. Upsize 1 provides less than or equal to Class B temperature rise. Upsize 2 provides less than or equal

FUEL

Fuel Consumption Rates

Fuel Pump Lift - in (m)
36(.9)

STANDBY

Percent Load	gph	lph
25%	1.52	5.75
50%	2.33	8.82
75%	3.08	11.65
100%	4.15	15.71

COOLING

Coolant System Capacity - Gal (L)
4.5 (17.44)

Maximum Radiator Backpressure
1.5" H_2O Column

		STANDBY
Coolant Flow per Minute	gpm (lpm)	32.7(123.8)
Heat rejection to Coolant	BTU/min	123,000
Inlet Air	cfm (m3/min)	6,360 (180.0)
Max. Operating Radiator Air Temp	F° (C°)	122(50)
Max. Operating Ambient Temperature	F° (C°)	122(50)

COMBUSTION AIR REQUIREMENTS

		STANDBY
Intake Flow at Rated Power	cfm (m3/min)	247 (7.00)

EXHAUST

Exhaust Outlet Size (Open Set)
3.0"

Maximum Backpressure (Post Silencer)
1.5" Hg

		STANDBY
Exhaust Flow (Rated Output)	cfm (m3/hr)	534(906.7)
Maximum Backpressure	inHg (Kpa)	1.5 (5.1)
Exhaust Temp (Rated Output)	°F (°C)	930(498.8)

ENGINE

		STANDBY
Rated Engine Speed	rpm	1800
Horsepower at Rated kW	hp	93
Temperature Deration		Consult Factory
Altitude Deration		Consult Factory

* UL units include aftertreatment

Deration – Operational characteristics consider maximum ambient conditions. Derate factors may apply under atypica site conditions. Please consult a Generac Power Systems Industrial Dealer for additional details. All performance ratings in accordance with ISO3046, BS5514, ISO8528 and DIN6271 standards.

AMERICAN TOWER® CORPORATION
496 LONG POINT ROAD
MOUNT PLEASANT, SC 29464
TEL.: (843) 971-8385
FAX: (843) 971-8889

THESE DRAWINGS AND/OR THE ACCOMPANYING SPECIFICATION AS INSTRUMENTS OF SERVICE, ARE THE EXCLUSIVE PROPERTY OF AMERICAN TOWER CORPORATION AND THEIR USE AND PUBLICATION SHALL BE RESTRICTED TO THE ORIGINAL SITE FOR WHICH THEY ARE PREPARED. REUSE, REPRODUCTION OR PUBLICATION BY ANY METHOD, IN WHOLE OR IN PART, IS PROHIBITED EXCEPT BY WRITTEN PERMISSION FROM AMERICAN TOWER CORPORATION TITLE TO THESE PLANS AND/OR SPECIFICATIONS SHALL REMAIN WITH AMERICAN TOWER CORPORATION WITHOUT PREJUDICE AND VISUAL CONTACT WITH THEM SHALL CONSTITUTE PRIMA FACIE EVIDENCE OF ACCEPTANCE OF THESE RESTRICTIONS.

BC architects engineers
5661 COLUMBIA PIKE, SUITE 200
FALLS CHURCH, VA 22041-2868
TEL: (703) 671-6000
FAX: (703) 671-6300

SHEET REVISION

NO.	DESCRIPTION	BY	DATE
1			
2			
3			
4			
5			
6			

ATC SITE NUMBER:
275164
ATC SITE NAME:
MAC RAE PARK NC
SITE ADDRESS:
4417 LAKE AVE.
WILMINGTON, NC 28409

STAMP HERE:
NORTH CAROLINA PROFESSIONAL SEAL 0024902 ENGINEER CHRISTOPHER D. MORIN
9.15.14

DRAWN BY:	AGT
CHECKED BY:	DRS
DATE DRAWN:	03-24-14
SUBMISSION:	FINAL CD'S

SHEET TITLE:
PROPOSED 50KW GENERATOR DETAILS

SHEET NUMBER: GEN-2
REV. #

N.T.S. | 50KW GENERATOR SPECIFICATIONS | 1

03-24-14 ARNOLD 10:05:31 Y:/Drawings – 2013/ATC/Mac Rae Park NC – 275164/_CD's_2014.02.10/GEN2.dwg

0J2534

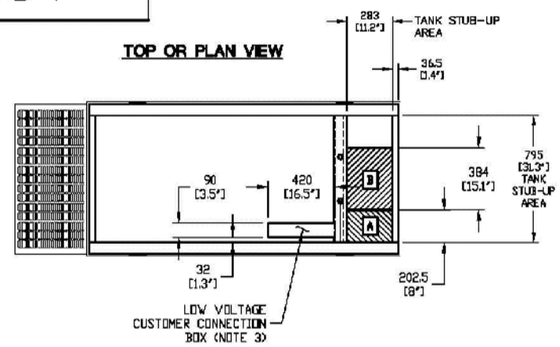

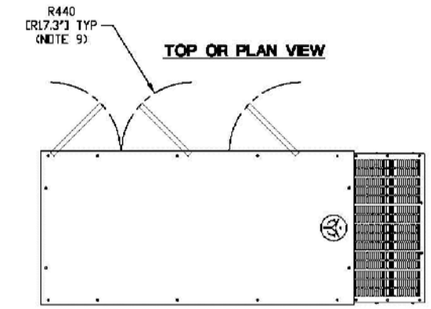

RECOMMENDED ELECTRICAL STUB-UPS (SEE TOP VIEW)	
DESCRIPTION	INSIDE BASE
AC LOAD LEAD CONDUIT GLAND AREA	A
1) LOW VOLTAGE CUSTOMER CONNECTION BOX FOR 120VAC GFCI OUTLET, (STANDARD BLOCK HEATER, BATTERY CHARGER AND OTHER 120 VAC OPTIONS). 2) TRANSFER SWITCH/ COMMUNICATION CONDUITS. COMMUNICATIONS AND 2-WIRE START MUST NOT BE RUN IN CONDUIT WITH AC WIRING.	B SEE NOTE 3

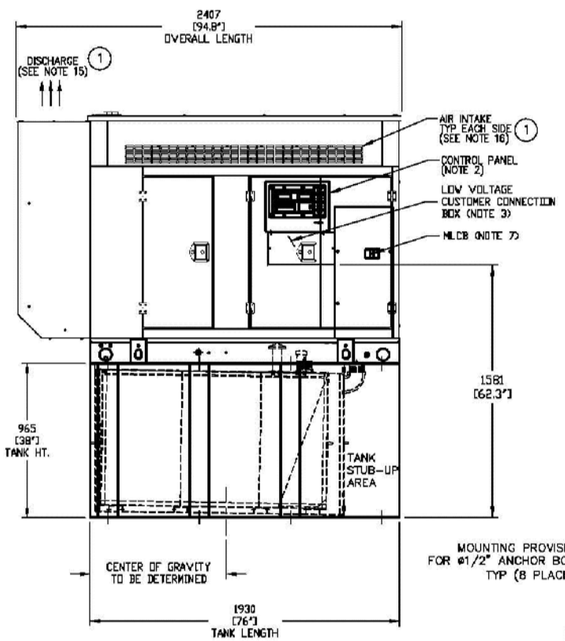

LEFT SIDE VIEW

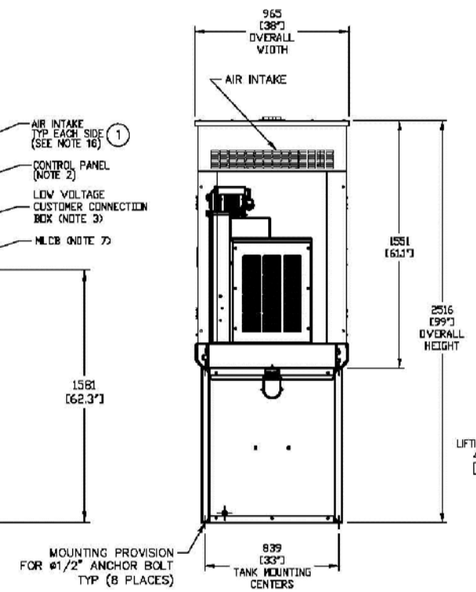

REAR VIEW

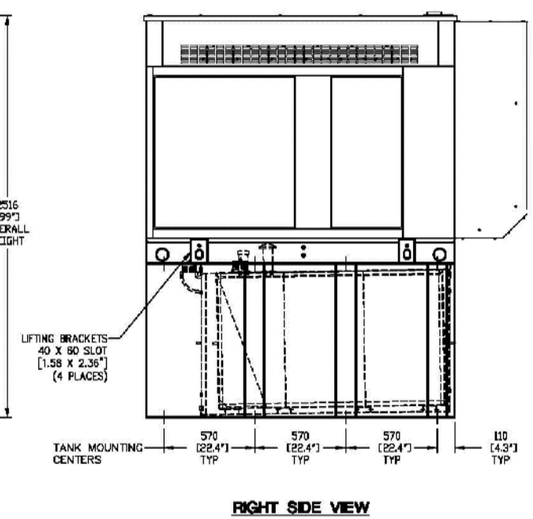

RIGHT SIDE VIEW

NOTES:

1. THE LEFT SIDE OF THE GENERATOR IS SERVICE ACCESSIBLE.
2. 10 AMP BATTERY CHARGER ENCLOSED WITHIN CONTROL PANEL.
3. CONNECTION POINTS FOR CONTROL WIRES. BOTTOM OF LOW VOLTAGE CUSTOMER CONNECTION BOX HAS KNOCKOUTS FOR 1/2" AND 3/4" CONDUIT FITTINGS.
4. GENERATOR MUST BE GROUNDED.
5. 12 VOLT NEGATIVE GROUND SYSTEM.
6. OPTIONAL REMOTE EMERGENCY STOP SHIPPED LOOSE WITH GENERATOR.
7. MAIN LINE CIRCUIT BREAKER (MLCB), AC LOAD LEAD CONNECTION AND AUXILIARY 120/240V CONNECTION.
8. LEVEL 2A SOUND ATTENUATED ENCLOSURE STANDARD WITH GENERATOR.
9. DOORS MUST BE ABLE TO OPEN 90 DEG. TO BE REMOVED. DOORS ARE LOCATED ON THE LEFT SIDE OF THE GENERATOR ONLY.
10. STUB-UPS: BASE TANK REQUIRES ALL STUB-UPS TO BE IN THE REAR TANK STUB-UP AREA.
11. 'A' IS THE STUB UP AREA FOR THE MLCB AND NEUTRAL CONNECTION.
12. SEE DRAWING 0C3850 FOR DUCT REMOVAL. REMOVAL OF FRONT DUCT WILL PROVIDE ACCESS TO MUFFLER.
13. 120VAC ENGINE BLOCK HEATER.
14. 210 GALLON USEABLE CAPACITY BASETANK STANDARD WITH GENERATOR.
15. (1) MUST ALLOW FREE FLOW OF DISCHARGE AIR AND EXHAUST. SEE SPEC SHEET FOR MINIMUM AIR FLOW AND MAXIMUM RESTRICTION REQUIREMENTS.
16. (1) MUST ALLOW FREE FLOW OF INTAKE AIR. SEE SPEC SHEET FOR MINIMUM AIR FLOW AND MAXIMUM RESTRICTION REQUIREMENTS.
17. (1) IT IS THE RESPONSIBILITY OF THE INSTALLATION TECHNICIAN TO ENSURE THAT THE GENERATOR INSTALLATION COMPLIES WITH ALL APPLICABLE CODES, STANDARDS, AND REGULATIONS.

WEIGHT DATA (INCLUDES WOODEN SHIPPING SKID)
ENCLOSED GENERATOR WITH EMPTY FUEL TANK – TO BE DETERMINED

UNITS: mm [INCHES]

GENERAC POWER SYSTEMS OWNS THE COPYRIGHT OF THIS DRAWING WHICH IS SUPPLIED IN CONFIDENCE AND MUST NOT BE USED FOR ANY PURPOSE OTHER THAN FOR WHICH IT IS SUPPLIED WITHOUT THE EXPRESS WRITTEN CONSENT OF GENERAC POWER SYSTEMS.

© GENERAC POWER SYSTEMS 2001

INSTALLATION D4.5L G17 50KW

ENCLOSED LEVEL 2A

GENERAC POWER SYSTEMS
Waukesha
P.O. BOX 8
WAUKESHA, WIS. 53187

FILE NAME	0J2534.DWG	SIZE	B
SCALE	NTS	FIRST USE	AT&T
DWG NO.	0J2534	REV	1

INSTALLATION DRAWING

CITY OF WILMINGTON NORTH CAROLINA
Public Services • Engineering Division
APPROVED PLAN – NO PERMIT REQUIRED
Signed: _____

APPROVED CONSTRUCTION PLAN

NAME DATE

PLANNING_____

TRAFFIC_____

FIRE_____

N.T.S. | 50KW GENERATOR INSTALLATION DRAWING | 1

AMERICAN TOWER® CORPORATION
496 LONG POINT ROAD
MOUNT PLEASANT, SC 29464
TEL.: (843) 971-8385
FAX: (843) 971-8889

THESE DRAWINGS AND/OR THE ACCOMPANYING SPECIFICATION AS INSTRUMENTS OF SERVICE, ARE THE EXCLUSIVE PROPERTY OF AMERICAN TOWER CORPORATION AND THEIR USE AND PUBLICATION SHALL BE RESTRICTED TO THE ORIGINAL SITE FOR WHICH THEY ARE PREPARED. REUSE, REPRODUCTION OR PUBLICATION BY ANY METHOD, IN WHOLE OR IN PART, IS PROHIBITED EXCEPT BY WRITTEN PERMISSION FROM AMERICAN TOWER CORPORATION TITLE TO THESE PLANS AND/OR SPECIFICATIONS SHALL REMAIN WITH AMERICAN TOWER CORPORATION WITHOUT PREJUDICE AND VISUAL CONTACT WITH THEM SHALL CONSTITUTE PRIMA FACIE EVIDENCE OF ACCEPTANCE OF THESE RESTRICTIONS.

BC architects engineers
5661 COLUMBIA PIKE, SUITE 200
FALLS CHURCH, VA 22041-2868
TEL: (703) 671-6000
FAX: (703) 671-6300

SHEET REVISION

NO.	DESCRIPTION	BY	DATE
1			
2			
3			
4			
5			
6			

ATC SITE NUMBER:
275164
ATC SITE NAME:
MAC RAE PARK NC
SITE ADDRESS:
4417 LAKE AVE.
WILMINGTON, NC 28409

STAMP HERE:
NORTH CAROLINA PROFESSIONAL SEAL 0024902 ENGINEER CHRISTOPHER D. MORIN
9.15.14

DRAWN BY:	AGT
CHECKED BY:	DRS
DATE DRAWN:	03-24-14
SUBMISSION:	FINAL CD'S

SHEET TITLE:
PROPOSED 50KW GENERATOR DETAILS

SHEET NUMBER: GEN-3
REV. #

08-01-14 VICTOR GARCIA 13:41:39 Y:/Drawings – 2013/ATC/Mac Rae Park NC – 275164/_CD's Rev 4 2014-08-01/GEN3.dwg

CITY OF WILMINGTON NORTH CAROLINA

Public Services • Engineering Division

APPROVED PLAN – NO PERMIT REQUIRED

Signed: _____

APPROVED CONSTRUCTION PLAN

NAME DATE

PLANNING_____

TRAFFIC_____

FIRE_____

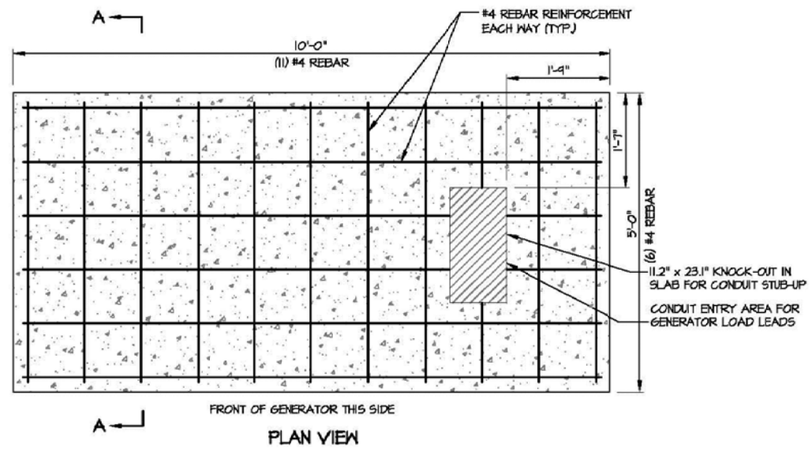

PLAN VIEW

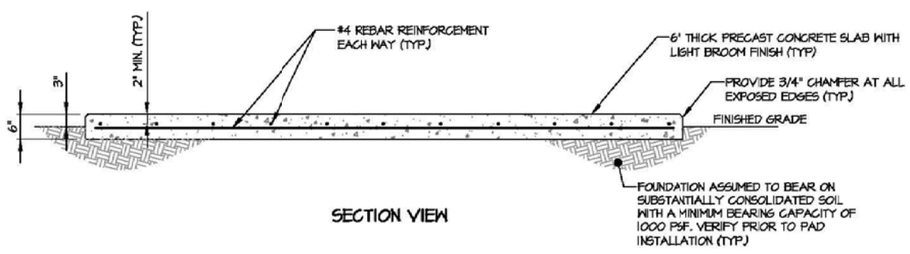

SECTION VIEW

MONOLITHIC GENERATOR SLAB DETAIL
NOT TO SCALE

LIFTING NOTE:
THE CONTRACTOR SHALL COORDINATE THE INSTALLATION OF EMBEDDED HOISTING HOOKS OR REBAR AS REQUIRED PRIOR TO FABRICATION.

REINFORCED CONCRETE NOTES:

1. ALL CONCRETE WORK SHALL BE IN ACCORDANCE WITH THE ACI 301, ACI 318, ACI 336, ASTM A184, ASTM A185 AND THE DESIGN & CONSTRUCTION SPECIFICATION FOR CAST-IN-PLACE CONCRETE.
2. SITECAST CONCRETE FOR SLABS AND POST FOOTINGS SHALL HAVE A MINIMUM COMPRESSIVE STRENGTH OF 3000 PSI AT 28 DAYS. CONCRETE TESTING IS NOT REQUIRED FOR SLABS AND POST FOOTINGS UNLESS NOTED OTHERWISE.

   SLUMP - 4" MIN. / 6" MAX.
   AIR ENTRAINMENT - 2% TO 3% BY VOLUME

   CLASSES OF CONCRETE

CLASS	28 DAY STRENGTH (PSI)	MAX WATER/CEMENT RATIO	PLACEMENT LOCATION	NOTES
TYPE I	3000	0.55	SLABS & FOOTINGS	NORMAL WEIGHT
TYPE III *	5000	0.45	SLABS & FOOTINGS	HIGH EARLY STRENGTH

   * IF REQUIRED BY THE CONSTRUCTION SCHEDULE THE CONTRACTOR MAY SUBSTITUTE TYPE III HIGH EARLY STRENGTH CONCRETE WITH THE APPROVAL OF THE CONSTRUCTION MANAGER.
3. REINFORCING STEEL SHALL CONFORM TO ASTM A 615, GRADE 60, DEFORMED UNLESS NOTED OTHERWISE. WELDED WIRE FABRIC SHALL CONFORM TO ASTM A185 WELDED STEEL WIRE FABRIC UNLESS NOTED OTHERWISE. SPLICES FOR REBAR SHALL BE CLASS "B" AND ALL HOOKS SHALL BE STANDARD, UNO. LAPS FOR WELDED WIRE FABRIC SHALL BE AT LEAST 8 INCHES, UNO.
4. THE FOLLOWING MINIMUM CONCRETE COVER SHALL BE PROVIDED FOR REINFORCING STEEL UNLESS SHOWN OTHERWISE ON DRAWINGS:

   CONCRETE CAST AGAINST EARTH.....3"
   CONCRETE EXPOSED TO EARTH OR WEATHER
   #6 AND LARGER.....2"
   #5 AND SMALLER & W.W.F.....1-1/2"
6. MAXIMUM COARSE AGGREGATE SIZE SHALL BE 3/4".
7. INSTALLATION OF CONCRETE ANCHORS SHALL BE IN ACCORDANCE WITH THE MANUFACTURER'S WRITTEN SPECIFICATIONS. THE ANCHOR BOLT, DOWEL, OR ROD SHALL CONFORM TO THE ANCHOR MANUFACTURER'S SPECIFICATIONS FOR MATERIAL STRENGTH, EMBEDMENT DEPTH, SPACING, AND EDGE DISTANCE OR AS DETAILED ON THE DRAWINGS. NO REBAR SHALL BE CUT WITHOUT PRIOR ENGINEERING APPROVAL WHEN DRILLING HOLES IN CONCRETE. EXPANSION BOLTS SHALL BE PROVIDED BY RAMSET/REDHEAD, HILTI, OR APPROVED EQUAL. IF THE MANUFACTURER'S SPECIFICATIONS AND DETAILS ARE FOUND TO CONFLICT WITH THAT SHOWN HEREIN, THE ENGINEER SHALL BE NOTIFIED IMMEDIATELY.
8. THE CONTRACTOR SHALL VERIFY FROST LINE AND FOOTING DEPTH REQUIREMENTS WITH THE JURISDICTION HAVING AUTHORITY PRIOR TO CONSTRUCTION.
9. MECHANICAL VIBRATION IS REQUIRED ON ALL SLABS TO REDUCE THE HONEYCOMB EFFECT UNLESS DIRECTED BY THE CONSTRUCTION MANAGER.
10. THE CONTRACTOR SHALL VERIFY ALL ELECTRICAL CONDUIT SIZES AND PENETRATION LOCATIONS PRIOR TO POURING THE SLAB.

PM&A
30 MANSELL CT
SUITE 103
ROSWELL, GA 30076
678-280-2325

at&t

NUM	DATE	DESCRIPTION:
A	06/26/13	ISSUED FOR REVIEW
B	07/01/13	REVISED PER COMMENTS
C	07/10/13	REVISED PER TOWER OWNER COMMENTS

SITE ID: 072-297 / BLACK CREEK

GENERATOR FOUNDATION DETAILS

DESIGNED: DCC
DRAWN: DCC
CHECKED: PWM

JOB #: WTC100

C-11

AMERICAN TOWER® CORPORATION
496 LONG POINT ROAD
MOUNT PLEASANT, SC 29464
TEL.: (843) 971-8385
FAX: (843) 971-8889

THESE DRAWINGS AND/OR THE ACCOMPANYING SPECIFICATION AS INSTRUMENTS OF SERVICE, ARE THE EXCLUSIVE PROPERTY OF AMERICAN TOWER CORPORATION AND THEIR USE AND PUBLICATION SHALL BE RESTRICTED TO THE ORIGINAL SITE FOR WHICH THEY ARE PREPARED. REUSE, REPRODUCTION OR PUBLICATION BY ANY METHOD, IN WHOLE OR IN PART, IS PROHIBITED EXCEPT BY WRITTEN PERMISSION FROM AMERICAN TOWER CORPORATION TITLE TO THESE PLANS AND/OR SPECIFICATIONS SHALL REMAIN WITH AMERICAN TOWER CORPORATION WITHOUT PREJUDICE AND VISUAL CONTACT WITH THEM SHALL CONSTITUTE PRIMA FACIE EVIDENCE OF ACCEPTANCE OF THESE RESTRICTIONS.

BC architects engineers
5661 COLUMBIA PIKE, SUITE 200
FALLS CHURCH, VA 22041-2868
TEL: (703) 671-6000
FAX: (703) 671-6300

SHEET REVISION

NO.	DESCRIPTION	BY	DATE
1			
2			
3			
4			
5			
6			

ATC SITE NUMBER:
275164

ATC SITE NAME:
MAC RAE PARK NC

SITE ADDRESS:
4417 LAKE AVE.
WILMINGTON, NC 28409

STAMP HERE:
NORTH CAROLINA PROFESSIONAL SEAL 0024902 ENGINEER CHRISTOPHER D. MORIN
9.15.14

DRAWN BY:	AGT
CHECKED BY:	DRS
DATE DRAWN:	03-24-14
SUBMISSION:	FINAL CD'S

SHEET TITLE:
PROPOSED 50KW GENERATOR DETAILS

SHEET NUMBER: GEN-4
REV. #

03-24-14 ARNOLD 10:07:33 Y:/Drawings – 2013/ATC/Mac Rae Park NC – 275164/_CD's_2014.02.10/GEN4.dwg

1.1 PURPOSE AND INTENT
1.2 CONFLICTS
1.3 CLEANING
1.4 CODES
1.5 LICENSING
1.6 OSHA
1.7 PHOTOS
1.8 BUILDING PERMITS
1.9 ZONING REGULATIONS AND CONDITIONAL USE PERMITS
1.10 FAA PERMIT AND TOWER LIGHTING
1.11 TOWER SECURITY
1.12 SITE CONTROL

2.1 SCOPE OF WORK
2.2 PRODUCT AND MATERIALS

3.1 SCOPE OF WORK
3.2 QUALITY ASSURANCE
3.3 PRODUCTS AND MATERIALS
3.4 CLEARING AND GRUBBING
3.5 STRIPPING
3.6 COMMON EXCAVATION
3.7 EMBANKMENT
3.8 SITE GRADING
3.9 SUBGRADE PREPARATION
3.10 GEOTEXTILE FABRIC
3.11 GRAVEL SURFACING

4.1 MATERIALS
4.2 PIPE DETECTION AND IDENTIFICATION
4.3 TRENCH EXCAVATION
4.4 TRENCH PROTECTION
4.5 BACKFILLING
4.6 COMPACTION

5.1 GENERAL
5.2 PRODUCTS AND MATERIALS

CITY OF WILMINGTON NORTH CAROLINA
Public Services Engineering Division
APPROVED PLAN - NO PERMIT REQUIRED
Signed: _____

APPROVED CONSTRUCTION PLAN

NAME	DATE
PLANNING	
TRAFFIC	
FIRE	

1.1 PURPOSE AND INTENT

A. THE DRAWINGS AND SPECIFICATIONS ARE INTENDED TO BE FULLY EXPLANATORY AND SUPPLEMENTARY, HOWEVER, SHOULD ANYTHING BE SHOWN, INDICATED, OR SPECIFIED ON ONE AND NOT THE OTHER, IT SHALL BE DONE THE SAME AS IF SHOWN, INDICATED OR SPECIFIED IN BOTH. SHOULD THERE BE ANY DISCREPANCIES BETWEEN REQUIREMENTS SHOWN IN BOTH, THE MORE STRINGENT REQUIREMENTS SHALL APPLY.

B. THE INTENTION OF THE DOCUMENTS IS TO INCLUDE ALL LABOR AND MATERIALS REASONABLY NECESSARY FOR THE PROPER EXECUTION AND COMPLETION OF THE WORK AS STIPULATED IN THE CONTRACT.

1.2 CONFLICTS

A. VERIFY ALL MEASUREMENTS AT THE SITE BEFORE ORDERING MATERIAL OR DOING ANY WORK. NO EXTRA CHARGE OR COMPENSATION WILL BE ALLOWED DUE TO DIFFERENCES BETWEEN ACTUAL DIMENSIONS OR DIMENSIONS SHOWN ON PLANS. SUBMIT NOTICE OF ANY DISCREPANCY IN DIMENSIONS OR OTHERWISE TO AMERICAN TOWER CO. FOR RESOLUTION BEFORE PROCEEDING WITH THE WORK.

B. NO PLEA OF IGNORANCE OF CONDITIONS THAT EXIST, OR OF DIFFICULTIES OF CONDITIONS THAT MAY BE ENCOUNTERED, OR OF ANY OTHER RELEVANT MATTER CONCERNING THE EXECUTION OF THE WORK WILL BE ACCEPTED AS AN EXCUSE FOR ANY FAILURE OR OMISSION ON THE PART OF THE CONTRACTOR TO FULFILL EVERY DETAIL OF ALL THE REQUIREMENTS OF THE CONSTRUTION DOCUMENTS GOVERNING THE WORK.

1.3 CLEANING

KEEP THE SITE FREE FROM ACCUMULATION OF WASTE AND RUBBISH CAUSED BY EMPLOYEES. AT THE COMPLETION OF THE WORK, REMOVE ALL WASTE AND NON-CONSTRUCTION MATERIAL, INCLUDING ALL CONTRACTOR TOOLS, SCAFFOLDING, AND SURPLUS MATERIAL AND LEAVE SITE CLEAN AND READY FOR USE.

1.4 CODES

CONTRACTOR SHALL BE RESPONSIBLE FOR FOLLOWING ALL LAWS, REGULATIONS, AND RULES PROMULGATED BY FEDERAL STATE AND LOCAL AUTHORITIES WITH JURISDICTION OVER THE SITE. THIS RESPONSIBILITY IS IN EFFECT REGARDLESS OF WHETHER THE LAW, ORDINANCE, REGULATION OR RULE IS MENTIONED IN THESE SPECIFICATIONS.

1.5 LICENSING

HAVE AND MAINTAIN A VALID CONTRACTOR'S LICENSE FOR THE LOCATION IN WHICH THE WORK IS TO BE PERFORMED. FOR JURISDICTIONS THAT LICENSE INDIVIDUAL TRADES, THE TRADESMAN OR SUBCONTRACTOR'S PERFORMING THOSE TRADES SHALL BE LICENSED. RESEARCH AND COMPLY WITH LICENSING LAWS, PAY LICENSE FEES, AND SELECT AND INFORM SUBCONTRACTORS REGARDING THESE LAWS.

1.6 OSHA

FOLLOW ALL APPLICABLE RULES AND REGULATIONS OF THE OCCUPATIONAL SAFETY AND HEALTH ADMINISTRATIONS, AND STATE LAWS BASED IN THE FEDERAL OCCUPATIONAL SAFETY AND HEALTH ACT. THESE REGULATIONS INCLUDE, BUT ARE NOT LIMITED TO, REGULATIONS DEALING WITH TOWER CONSTRUCTION AND SAFETY, EXCAVATIONS AND TRENCHING, AND WORK IN CONFINED SPACES. ENSURE THAT EMPLOYEES AND SUBCONTRACTORS WEAR HARD HATS AT ALL TIMES DURING CONSTRUCTION. GC SHALL INSURE ALL CLIMBERS MAINTAIN 100% FALL PROTECTION AT ALL TIMES & BE ABLE TO SHOW ALL CLIMBERS HAVE COMPLETED CLIMBING SAFETY TRAINING AND TOWER RESCUE COURSE.

1.7 PHOTOS

PROVIDE PHOTOGRAPHIC EVIDENCE OF ALL FOUNDATION INSTALLATION, GROUNDING, AND TRENCHING AFTER PLACEMENT OF UTILITIES PRIOR TO BACKFILL.

1.8 BUILDING PERMITS

AMERICAN TOWER CO. WILL SUBMIT CONSTRUCTION DOCUMENTS TO THE JURISDICTIONAL AUTHORITY FOR PLAN CHECK AND REVIEW. CONTRACTOR WILL SUBMIT LICENSING AND WORKMAN'S COMPENSATION INFORMATION TO THE JURISDICTION AS REQUIRED TO OBTAIN THE BUILDING PERMIT. CONTRACTOR SHALL COORDINATE AND SCHEDULE REQUIRED INSPECTIONS AND POST REQUIRED PERMITS AT THE JOB SITE. COMPLY WITH SPECIFIC PROJECT-RELATED REQUESTS AND SUGGESTIONS MADE BY BUILDING INSPECTOR, AND INFORM CONSTRUCTION MANAGER OF ANY SUCH WORK THAT MAY MAY BE BEYOND THE SCOPE OF THE CONTRACT OR DEVIATE FROM THE CONSTRUCTION DOCUMENTS. AMERICAN TOWER CO. WILL REIMBURSE THE CONTRACTOR FOR FEES, FOR PLAN REVIEW, BUILDING PERMIT, CONNECTIONS, AND INSPECTION.

1.9 ZONING REGULATIONS AND CONDITIONAL USE PERMITS

AMERICAN TOWER CO. WILL SUBMIT FOR AND OBTAIN ALL ZONING AND CONDITIONAL USE PERMITS. SOME USE PERMITS MAY HAVE SPECIFIC REQUIREMENTS FOR THE SITE RELATED TO CONSTRUCTION, SUCH AS NOISE REGULATIONS, HOURS OF WORK, ACCESS LIMITATIONS, ETC. THE CONSTRUCTION MANAGER WILL INFORM THE CONTRACTOR OF THESE REQUIREMENTS AT THE PRE-BID MEETING OR AS SHOWN IN CONSTRUCTION DOCUMENTS.

1.10 FAA PERMIT AND TOWER LIGHTING

REFER TO CONSTRUCTION DOCUMENTS AND CONSTRUCTION MANAGER FOR FAA AND STATE LIGHTING REQUIREMENTS. CONTRACTOR SHALL PROVIDE TEMPORARY FAA APPROVED LIGHTING UNTIL PERMANENT LIGHTING IS OPERATIONAL.

1.11 TOWER SECURITY

TOWER MUST BE FENCED, TEMPORARILY OR PERMANENTLY WITHIN 24 HOURS OF ERECTION. DO NOT ALLOW THE GATE ACCESSING THE TOWER AREA TO REMAIN OPEN OR UNATTENDED AT ANY TIME FOR ANY REASON. KEEP THE GATE CLOSED AND LOCKED WHEN NOT IN USE.

1.12 SITE CONTROL

A. THE CONTRACTOR IS COMPLETELY RESPONSIBLE FOR CONTAINMENT OF SEDIMENT AND CONTROL OF EROSION AT THE SITE. ANY DAMAGE TO ADJACENT OR DOWNSTREAM PROPERTIES WILL BE CORRECTED BY THE CONTRACTOR AT NO EXPENSE TO AMERICAN TOWER CO..

B. THE CONTRACTOR IS TO MAINTAIN ADEQUATE DRAINAGE AT ALL TIMES. DO NOT ALLOW WATER TO STAND OR POND. ANY DAMAGE TO STRUCTURES OR WORK ON THE SITE CAUSED BY INADEQUATE MAINTENANCE OF DRAINAGE PROVISIONS WILL BE THE RESPONSIBILITY OF THE CONTRACTOR AND ANY COST ASSOCIATED WITH REPAIRS FOR SUCH DAMAGE WILL BE AT THE CONTRACTOR'S EXPENSE.

C. ALL WASTE MATERIAL SHALL BE PROPERLY DISPOSED OF OFF-SITE OR AS DIRECTED BY THE CONSTRUCTION MANAGER AND IN ACCORDANCE WITH JURISDICTIONAL AUTHORITIES.

2.1 SCOPE OF WORK INCLUDES:

A. PROTECTION OF EXISTING TREES, VEGETATION AND LANDSCAPING MATERIALS WHICH MIGHT BE DAMAGED BY CONSTRUCTION ACTIVITIES.

B. TRIMMING OF EXISTING TREES AND VEGETATION AS REQUIRED FOR PROTECTION DURING CONSTRUCTION ACTIVITIES.

C. CLEARING AND GRUBBING OF STUMPS, VEGETATION, DEBRIS, RUBBISH, DESIGNATED TREES, AND SITE IMPROVEMENTS.

D. TOPSOIL STRIPPING AND STOCKPILING.

E. TEMPORARY EROSION CONTROL, SILTATION CONTROL, AND DUST CONTROL CONFORMING TO LOCAL REQUIREMENTS AS APPLICABLE.

F. TEMPORARY PROTECTION OF ADJACENT PROPERTY, STRUCTURES, BENCHMARKS, AND MONUMENTS.

G. PROTECTION AND TEMPORARY RELOCATION, STORAGE AND RE-INSTALLATION OF EXISTING FENCING AND OTHER SITE IMPROVEMENTS SCHEDULED FOR REUSE.

H. REMOVAL AND LEGAL DISPOSAL OF CLEARED MATERIALS.

2.2 PRODUCTS AND MATERIALS (AS APPROVED BY CONSTRUCTION MANAGER OR AS NOTED IN CONSTRUCTION DOCUMENTS.)

A. MATERIALS USED FOR TREE PROTECTION, EROSION CONTROL, SILTATION CONTROL, AND DUST CONTROL AS SUITABLE FOR SPECIFIC SITE CONDITIONS.

3.1 SCOPE OF WORK INCLUDES:

A. EXCAVATION, TRENCHING, FILLING, COMPACTION, AND GRADING FOR STRUCTURES, SITE IMPROVEMENTS, AND UTILITIES.

B. MATERIALS FOR SUB-BASE, DRAINAGE FILL, FILL, BACKFILL, AND GRAVEL FOR SLABS, PAVEMENTS, AND IMPROVEMENTS.

C. ROCK EXCAVATION WITHOUT BLASTING.

D. SUPPLY OF ADDITIONAL MATERIALS FROM OFFSITE AS REQUIRED.

E. REMOVAL AND LEGAL DISPOSAL OF EXCAVATED MATERIALS AS REQUIRED.

3.2 QUALITY ASSURANCE

A. COMPACTION:

1. UNDER STRUCTURES, BUILDING SLABS, PAVEMENTS, AND WALKWAYS WILL OBTAIN A 95 PERCENT COMPACTION AT A MAXIMUM DRY DENSITY AS DETERMINED BY ASTM D-1557 OR WITHIN PLUS OR MINUS 3 PERCENT OF OPTIMUM MOISTURE CONTENT.

B. GRADING TOLERANCES OUTSIDE BUILDING LINES:

1. LAWNS, UNPAVED AREAS, AND WALKS, PLUS OR MINUS 1 INCH.
2. UNDER PAVEMENTS, PLUS OR MINUS 1/2 INCH.

C. GRADING TOLERANCE FOR FILL UNDER ALL CONCRETE APPLICATIONS: PLUS OR MINUS 1/2 INCH MEASURED WITH 10 FOOT STRAIGHTEDGE.

3.3 PRODUCTS AND MATERIALS (AS APPROVED BY CONSTRUCTION MANAGER OR AS NOTED IN CONSTRUCTION DOCUMENTS.)

A. SUBBASE MATERIAL: GRADED MIXTURE OF NATURAL OR CRUSHED GRAVEL, CRUSHED STONE OR SLAG, AND NATURAL SAND.

B. WASHED MATERIAL, EVENLY GRADED MIXTURE OF CRUSHED STONE OR GRAVEL, WITH 95 PERCENT PASSING A 11/2 INCH SIEVE.

C. GRADING MATERIAL WILL CONSIST OF: SATISFACTORY NATIVE OR IMPORTED SOIL MATERIALS FREE OF CLAY, ROCK OR GRAVEL NOT LARGER THAN 2 INCHES IN ANY DIMENSION. DEBRIS, WASTE, FROZEN MATERIALS, AND OTHER UNUSUITABLE MATERIALS WILL NOT BE ALLOWED FOR USE. IMPORTED MATERIALS SHALL HAVE A CLAY CONTENT NO MORE THAN 5 PERCENT.

D. BACKFILL MATERIALS WILL CONSIST OF: SATISFACTORY NON-COHESIVE NATIVE OR IMPORTED SOIL MATERIALS FREE OF CLAY, ROCK OR GRAVEL NOT LARGER THAN 4 INCHES IN ANY DIMENSION, DEBRIS, WASTE, FROZEN MATERIALS, AND OTHER UNSUITABLE MATERIALS. IMPORTED MATERIAL SHALL HAVE A CLAY CONTENT OF NO MORE THAN 5 PERCENT.

E. GRAVEL MATERIAL: EVENLY GRADED MIXTURE OF CRUSHED STONE OR GRAVEL, WITH 95 PERCENT PASSING A 11/2 INCH SIEVE.

F. GEOTEXTILE FABRIC: AS PER CONSTRUCTION DOCUMENTS.

3.4 CLEARING AND GRUBBING

REMOVE ALL VEGETATION AND MATERIALS AS REQUIRED. REMOVE STUMPS COMPLETELY UNDER FOUNDATIONS AND ROADWAY. DISPOSE OF CLEARING AND GRUBBING OFF-SITE, OR IN AN ON-SITE LOCATION APPROVED BY CONSTRUCTION MANAGER.

3.5 STRIPPING

STRIP NOT LESS THAN 3 INCHES OF SOD AND TOPSOIL FROM AREAS THAT WILL UNDERLAY GRAVEL, PAVEMENT, NEW STRUCTURES, OR NEW EMBANKMENTS. STOCKPILE STRIPPING ON-SITE FOR RE-USE IN FINAL LANDSCAPING.

3.6 COMMON EXCAVATION

1. EXCAVATE TO DEPTH, LINES, AND GRADES SHOWN ON THE PLANS OR AS OTHERWISE SPECIFIED.
2. TEMPORARILY STOCKPILE ON-SITE EXCAVATION AT AN APPROVED LOCATION WITHIN THE WORK AREA UNTIL SITE GRADING IS COMPLETE. STOCKPILE SHALL NOT EXCEED 15 FEET IN HEIGHT.
3. LEGALLY DISPOSE OF EXCESS COMMON EXCAVATION OFF-SITE.

3.7 EMBANKMENT

A. CONSTRUCT EMBANKMENT TO THE LINES AND GRADE SHOWN ON THE DRAWINGS.

B. CONSTRUCT EMBANKMENT FROM ON-SITE EXCAVATION MATERIALS WHEN SUITABLE. USE IMPORTED BACKFILL ONLY AFTER AVAILABLE ON-SITE EXCAVATION MATERIALS HAVE BEEN USED.

C. CONSTRUCT IN LIFTS OF NOT MORE THAN 12 INCHES IN LOOSE DEPTH. THE FULL WIDTH OF THE CROSS SECTION SHALL BE BROUGHT UP UNIFORMLY.

D. MATERIAL SHALL NOT BE PLACED IN LAYERS AND SHALL BE NEAR OPTIMUM MOISTURE CONTENT BEFORE ROLLING TO OBTAIN THE PRESCRIBED COMPACTION. WETTING OR DRYING OF THE MATERIAL AND MANIPULATION TO SECURE A UNIFORM MOISTURE CONTENT THROUGHOUT THE LAYER MAY BE REQUIRED. SUCH OPERATIONS SHALL BE INCLUDED IN THE APPROPRIATE BID ITEM. SHOULD THE MATERIAL BE TOO WET TO PERMIT PROPER COMPACTION, IT IS THE CONTRACTOR'S RESPONSIBILITY TO UTILIZE MATERIAL WITH AN ACCEPTABLE MOISTURE CONTENT.

E. DO NOT PLACE FROZEN MATERIAL IN THE EMBANKMENT, AND DO NOT PLACE EMBANKMENT MATERIAL UPON FROZEN MATERIAL.

F. CONTRACTOR SHALL BE RESPONSIBLE FOR THE STABILITY OF EMBANKMENTS AND THE REPLACEMENT OF ANY PORTION WHICH HAS BECOME DISPLACED DUE TO THE CONTRACTOR'S OPERATIONS.

G. START LAYERS IN THE DEEPEST PORTION OF THE FILL, AND AS PLACEMENT PROGRESSES, CONSTRUCT LAYERS APPROXIMATELY PARALLEL TO THE FINISHED GRADE LINE.

H. ROUTE EQUIPMENT, BOTH LOADED AND EMPTY, OVER THE FULL WIDTH OF EMBANKMENT TO ENSURE UNIFORMITY OF MATERIAL PLACEMENT.

I. COMPACT EMBANKMENT UNDERLYING NEW GRAVEL PAVING, FLOOR SLABS, AND STRUCTURES TO A 95 PERCENT COMPACTION AT A MAXIMUM DRY DENSITY AS DETERMINED BY ASTM D-1557 OR WITHIN PLUS OR MINUS 3 PERCENT OF OPTIMUM MOISTURE CONTENT. COMPACT NON-STRUCTURAL AREA EMBANKMENTS TO A MINIMUM OF 90% OF ASTM D-1557.

3.8 SITE GRADING

A. USING ON-SITE EXCAVATION MATERIALS, SHAPE, TRIM, FINISH, AND COMPACT SURFACE AREAS TO CONFORM TO THE LINES, GRADES, AND CROSS SECTIONS SHOWN ON THE DRAWINGS OR AS DESIGNATED BY THE CONSTRUCTION MANAGER.

B. GRADE SURFACES TO DRAIN AND ELIMINATE ANY PONDING OR EROSION.

C. ELIMINATE WHEEL RUTS BY REGRADING.

D. COMPACT AREAS UNDERLYING NEW GRAVEL, PAVING, FLOOR SLABS, AND STRUCTURES TO A 95 PERCENT COMPACTION AT A MAXIMUM DRY DENSITY AS DETERMINED BY ASTM D-1557 OR WITHIN PLUS OR MINUS 3 PERCENT OF OPTIMUM MOISTURE CONTENT.

E. CONSTRUCT FINISHED SURFACE OF SITE GRADING AREAS WITHIN ONE INCH FROM SPECIFIED GRADE.

3.9 SUBGRADE PREPARATION

A. SHAPE TOP OF SUBGRADE TO THE LINES AND GRADES SHOWN ON THE DRAWINGS.

B. MAINTAIN TOP OF SUBGRADE IN A FREE-DRAINING CONDITION.

C. DO NOT STOCKPILE MATERIALS ON TOP OF SUBGRADE UNLESS AUTHORIZED BY CONSTRUCTION MANAGER.

D. COMPACT THE TOP 12 INCHES OF SUBGRADE TO A 95% COMPACTION AT A MAXIMUM DRY DENSITY AS DETERMINED BY ASTM D-1557 OR WITHIN PLUS OR MINUS 3 PERCENT OF OPTIMUM MOISTURE CONTENT.

E. CONSTRUCT TOP OF SUBGRADE WITHIN ONE INCH OF ESTABLISHED GRADE AND CROSS-SECTION.

3.10 GEOTEXTILE FABRIC

A. LAY GEOTEXTILE FABRIC OVER COMPACTED SUBGRADE AS PER CONSTRUCTION DOCUMENTS IN THE COMPOUND AREA AND UNDER LENGTH OF ROAD (WHEN REQUIRED). LAP ALL JOINTS TO A MINIMUM OF 36 INCHES.

3.11 GRAVEL SURFACING

A. CONSTRUCT GRAVEL SURFACING AREAS USING CRUSHED AGGREGATE BASE AND FINISH COURSES AS SPECIFIED BY CONSTRUCTION MANAGER OR CONSTRUCTION DOCUMENTS.

B. SPREAD GRAVEL AND RAKE TO OBTAIN A UNIFORM SURFACE AREA.

4.1 MATERIALS

FILL MATERIAL SHALL BE OBTAINED, WHEN POSSIBLE, FROM MATERIALS EXCAVATED FROM TRENCHS ON-SITE. STRUCTURAL FILL, SAND OR SLURRY SHALL BE APPROVED BY THE CONSTRUCTION MANAGER AND SHALL CONFORM TO LOCAL GOVERNING JURISDICTIONS AND UTILITY COMPANY REQUIREMENTS. THE FILL MATERIAL SHALL CONTAIN NO ORGANIC MATERIAL OR ROCKS, NOR SHALL CONTAIN OBJECTIONABLE MATERIALS AND/OR MATERIALS DESIGNATED AS HAZARDOUS OR INDUSTRIAL BY THE ENVIRONMENTAL PROTECTION AGENCY (EPA). THE FILL MATERIAL SHALL CONTAIN FINES SUFFICIENT TO FILL ALL VOIDS IN THE MATERIAL. COMPACTION OF BACKFILL OR BORROW SOIL SHALL BE PLACED IN 12 INCH LOOSE LIFTS WHEN UTILIZING HEAVY COMPACTION EQUIPMENT OR 6 INCH LOOSE LIFTS WHEN UTILIZING HAND OPERATED TAMPERS.

AMERICAN TOWER® CORPORATION
496 LONG POINT ROAD
MOUNT PLEASANT, SC 29464
TEL.: (843) 971-8385
FAX: (843) 971-8889

THESE DRAWINGS AND/OR THE ACCOMPANYING SPECIFICATION AS INSTRUMENTS OF SERVICE, ARE THE EXCLUSIVE PROPERTY OF AMERICAN TOWER CORPORATION AND THEIR USE AND PUBLICATION SHALL BE RESTRICTED TO THE ORIGINAL SITE FOR WHICH THEY ARE PREPARED. REUSE, REPRODUCTION OR PUBLICATION BY ANY METHOD, IN WHOLE OR IN PART, IS PROHIBITED EXCEPT BY WRITTEN PERMISSION FROM AMERICAN TOWER CORPORATION TITLE TO THESE PLANS AND/OR SPECIFICATIONS SHALL REMAIN WITH AMERICAN TOWER CORPORATION WITHOUT PREJUDICE AND VISUAL CONTACT WITH THEM SHALL CONSTITUTE PRIMA FACIE EVIDENCE OF ACCEPTANCE OF THESE RESTRICTIONS.

BC architects engineers
5661 COLUMBIA PIKE, SUITE 200
FALLS CHURCH, VA 22041-2868
TEL: (703) 671-6000
FAX: (703) 671-6300

SHEET REVISION

NO.	DESCRIPTION	BY	DATE
1			
2			
3			
4			
5			
6			

ATC SITE NUMBER:
275164
ATC SITE NAME:
MAC RAE PARK NC
SITE ADDRESS:
4417 LAKE AVE.
WILMINGTON, NC 28409

STAMP HERE:
NORTH CAROLINA PROFESSIONAL SEAL 0024902 ENGINEER CHRISTOPHER D. MORIN
9.15.14

DRAWN BY:	AGT
CHECKED BY:	DRS
DATE DRAWN:	03-24-14
SUBMISSION:	FINAL CD'S

SHEET TITLE:
SPECIFICATIONS

SHEET NUMBER: SP-1
REV. #

02-11-14 VICTOR GARCIA 10:48:37 Y:/Drawings - 2013/ATC/Mac Rae Park NC - 275164/_CD's_2014.02.10/SP1.dwg

4.2 PIPE DETECTION AND IDENTIFICATION

A. UTILIZING WARNING TAPE: ALL ELECTRIC SERVICE TRENCHES SHALL BE MARKED WITH WARNING TAPE.

4.3 TRENCH EXCAVATION

A. DIG TRENCH TO LINES AND GRADES SHOWN ON THE PLANS OR AS DIRECTED BY CONSTRUCTION MANAGER.

B. TRENCH LENGTH SHALL BE SUFFICIENT TO ALLOW FOR SATISFACTORY CONSTRUCTION AND INSPECTION OF THE PROJECT, WITHOUT ENDANGERING OTHER CONSTRUCTION WORK OR ADJACENT FACILITIES.

C. DISPOSE OF EXCESS AND UNSUITABLE EXCAVATION MATERIAL PROPERLY, AS DIRECTED BY CONSTRUCTION MANAGER.

D. USE HAND METHODS FOR EXCAVATION THAT CANNOT BE ACCOMPLISHED WITHOUT ENDANGERING EXISTING OR NEW STRUCTURES OR OTHER FACILITIES.

4.4 TRENCH PROTECTION

A. PROVIDE MATERIALS, LABOR, AND EQUIPMENT NECESSARY TO PROTECT TRENCHES AT ALL TIMES.

B. SHEETING AND BRACING: MEET OR EXCEED OSHA REQUIREMENTS.

4.5 BACKFILLING

A. NOTIFY THE CONSTRUCTION MANAGER AT LEAST 24 HOURS IN ADVANCE OF BACKFILLING.

B. BACKFILL TRENCH WITH LIFTS UP TO 12 INCHES, LOOSE MEASURE.

C. PROTECT CONDUIT FROM LATERAL MOVEMENT, DAMAGE FROM IMPACT, OR UNBALANCED LOADING TO AVOID DISPLACEMENT OF CONDUIT AND/OR STRUCTURES. DO NOT FREE FALL BACKFILL INTO TRENCH UNTIL AT LEAST 12 INCHES OF COVER IS OVER THE CONDUIT.

4.6 COMPACTION

A. COMPACT BACKFILL TO A 95 PERCENT COMPACTION AT A MAXIMUM DRY DENSITY AS DETERMINED BY ASTM D-1557 OR WITHIN PLUS OR MINUS 3 PERCENT OF OPTIMUM MOISTURE CONTENT.

B. IF REQUIRED COMPACTION DENSITY HAS NOT BEEN OBTAINED, REMOVE THE BACKFILL FROM THE TRENCH OR STRUCTURE, REPLACE WITH APPROVED BACKFILL, AND RECOMPACT AS SPECIFIED.

C. ANY SUBSEQUENT SETTLEMENT OF TRENCH OR STRUCTURE BACKFILL DURING MAINTENANCE PERIOD SHALL BE CONSIDERED THE RESULT OF IMPROPER COMPACTION AND SHALL BE PROMPTLY CORRECTED.

5.0 CHAIN LINK FENCES AND GATES

5.1 GENERAL

A. PROVIDE CHAIN LINK FENCES AND GATES AS COMPLETE UNITS BY A SINGLE SUPPLY SOURCE INCLUDING NECESSARY ERECTION ACCESSORIES, FITTINGS, AND FASTENERS.

5.2 PRODUCTS AND MATERIALS (AS APPROVED BY CONSTRUCTION MANAGER OR AS WITHIN CONSTRUCTION DOCUMENTS.)

A. COMPOUND FABRIC 72 INCHES HIGH AND OVER WITH 2-INCH MESH SHALL BE KNUCKLED AT ONE SELVAGE AND TWISTED AT THE OTHER.

B. STEEL FABRIC:

COMPLY WITH CHAIN LINK FENCE MANUFACTURERS INSTITUTE (CLFMI) PRODUCT MANUAL. FURNISH ONE PIECE OF FABRIC WIDTHS. WIRE SIZE INCLUDES ZINC OR ALUMINUM COATING.

1. SIZE: 2-INCH MESH, 9 GAUGE (0.148-INCH DIAMETER) WIRE.

2. GALVANIZED STEEL FINISH: ASTM A 392, CLASS 2, WITH A MINIMUM 2.0 OZ. ZINC PER SQ. FT. OF UNCOATED WIRE SURFACE.

C. FRAMEWORK AND ACCESSORIES:

1. GENERAL REQUIREMENTS: EXCEPT AS INDICATED OTHERWISE, CONFORM TO THE CHAIN LINK FENCE MANUFACTURERS INSTITUTE (CLFMI) PRODUCT MANUAL, INDUSTRIAL STEEL GUIDE FOR FENCE RAILS, POSTS, GATES AND ACCESSORIES, INCLUDING TABLE II.

2. STRENGTH REQUIREMENTS FOR POSTS AND RAILS CONFORMING TO ASTM F 669.

3. TYPE 1 PIPE: HOT-DIPPED GALVANIZED STEEL PIPE CONFORMING TO ASTM F 1083, PLANE ENDS, STANDARD WEIGHT (SCHEDULE 40) WITH NOT LESS THAN 1.8 OZ. ZINC PER SQ. FT. OF SURFACE AREA COATED.

4. FITTINGS: COMPLY WITH ASTM F 626. MILL FINISHED ALUMINUM OR GALVANIZED IRON STEEL, TO SUIT MANUFACTURER'S STANDARDS.

5. TOP RAIL: MANUFACTURER'S LONGEST LENGTHS, WITH EXPANSION TYPE COUPLINGS, APPROXIMATELY 6 INCHES LONG, FOR EACH JOINT. PROVIDE MEANS FOR ATTACHING TOP RAIL SECURELY TO EACH GATE CORNER, PULL AND END POST.

A. GALVANIZED STEEL: 11/4 INCH NPS (1.66 INCH OD) TYPE I OR II STEEL PIPE OR 1.625 INCH X 1.25 INCH ROLL-FORMED C SECTIONS WEIGHTING 1.35 LBS. PER FT.

D. SWING GATES:

COMPLY WITH ASTM F 9000. PROVIDE HARDWARE AND ACCESSORIES FOR EACH GATE, GALVANIZED PER ASTM A 153, AND IN ACCORDANCE WITH THE FOLLOWING:

1. HINGES: NON-LIFT-OFF TYPE, OFFSET TO PERMIT 180 DEG. GATE OPENING.

2. LATCH: MTS "MULTI-LOCKING DEVICE" #C-6477 OR APPROVED EQUAL.

3. KEEPER: PROVIDE KEEPER FOR VEHICLE GATES, WHICH AUTOMATICALLY ENGAGES GATE LEAF AND HOLDS IT IN OPEN POSITION UNTIL MANUALLY RELEASED.

4. GATE STOPS: PROVIDE GATE STOPS FOR DOUBLE GATES, CONSISTING OF MUSHROOM TYPE FLUSH PLATE WITH ANCHORS, SET IN CONCRETE, AND DESIGNED TO ENGAGE BOTTOM RAIL.

E. CONCRETE:

PROVIDE CONCRETE CONSISTING OF PORTLAND CEMENT, ASTM C 150, AGGREGATES ASTM C 33, AND CLEAN WATER. MIX MATERIALS TO OBTAIN CONCRETE WITH A MINIMUM OF 28-DAY COMPRESSIVE STRENGTH OF 3000 PSI.

6.0 LANDSCAPING

A. FURNISH, INSTALL AND MAINTAIN LANDSCAPE WORK AS SHOWN AND OR REQUIRED WITHIN THE CONSTRUCTION DOCUMENTS OR AS SPECIFIED IN THE AMERICAN TOWER CONSTRUCTION SPECIFICATIONS.

7.0 CONCRETE FORMWORK

A. FORMS: SMOOTH AND FREE OF SURFACE IRREGULARITIES. UTILIZE FORM RELEASE AGENTS.

B. CHAMFER: EXPOSED EDGES OF ALL TOWER FOUNDATIONS SHALL RECEIVE A 3/4" BY 3/4", 45 DEGREE CHAMFER. OTHER EXPOSED EDGES SHALL RECEIVE A TOOLED RADIUS FINISH.

C. UPON COMPLETION, REMOVE ALL FORMS, INCLUDING THOSE CONCEALED OR BURIED.

D. REFER TO STRUCTURAL DRAWINGS FOR ADDITIONAL REQUIREMENTS.

8.0 CONCRETE REINFORMENT

REFER TO STRUCTURAL DRAWINGS FOR ALL REQUIREMENTS.

9.0 CAST-IN PLACE CONCRETE

FOR STRUCTURAL CONCRETE (FOOTINGS, FOUNDATIONS, ETC.), REFER TO STRUCTURAL DRAWINGS FOR REQUIREMENTS. FOR ANY MISCELLANEOUS CONCRETE, REFER TO SPECIFICATION BOOK OR OBTAIN REQUIREMENTS FROM CONSTRUCTION MANAGER.

A. ALL CONCRETE SHALL COMPLY WITH ASTM C94 UNLESS NOTED OTHERWISE.

B. MINIMUM COMPRESSIVE STRENGTH (F'C) AT 28 DAYS: 4000 PSI FOR TOWER FOUNDATION, AND 3500 PSI FOR ALL OTHER CONCRETE UNLESS SPECIFIED IN CONSTRUCTION DOCUMENTS.

C. AIR ENTRAINMENT: PROVIDE 4 TO 8% AIR ENTRAINMENT FOR ALL CONCRETE SUBJECT TO FREEZE-THAW CYCLE.

D. CONCRETE TESTING: ALL FOUNDATION CONCRETE SHALL BE TESTED BY AN INDEPENDENT TESTING AGENCY APPROVED BY THE CONSTRUCTION MANAGER. ALL STRUCTURAL TOWER FOUNDATION CONCRETE MUST BE TESTED. EQUIPMENT OR BUILDING PADS ARE NOT REQUIRED TO BE TESTED, UNLESS OTHERWISE NOTED BY CONSTRUCTION MANAGER. PROVIDE A MINIMUM OF 5 CYLINDERS (2-7-DAY, 2-28-DAY, 1-SPARE) FOR EACH DAYS POUR, OR FOR EVERY 50 YARDS PLACED – WHICHEVER IS GREATER. ADDITIONAL TESTS OR CYLINDERS MAY BE REQUIRED BY CONSTRUCTION MANAGER. A SLUMP, AIR, AND TEMPERATURE TEST SHALL BE PERFORMED FOR EACH SET OF CYLINDERS CAST. PREFERABLY, TESTS SHALL BE PERFORMED AT THE LOCATION OF ANCHOR BOLTS (PIERS – FOR MAT & PIERS, CAISSONS – TOP 1/3 OF CAISSON). TESTS SHALL ALSO BE REQUIRED FOR CONCRETE CONSIDERED BEING LESS THAN DESIRABLE BY CONCRETE SPECIFICATION STANDARDS. THE TESTING AGENCY HAS THE AUTHORITY TO NOT ACCEPT CONCRETE MEETING THESE SPECIFICATIONS FOR AMERICAN TOWER. THE CONTRACTOR IS RESPONSIBLE FOR ANY CONCRETE NOT MEETING THESE STANDARDS. THE CONTRACTOR IS RESPONSIBLE FOR COORDINATION OF THE TESTING AGENCY A MINIMUM OF 24 HOURS IN ADVANCE OF EACH FOUNDATION POUR.

E. VIBRATE ALL CONCRETE USING SUFFICIENT HIGH FREQUENCY, LOW AMPLITUDE MECHANICAL IMMERSION TYPE VIBRATORS. INSERTVIBRATORS IN CONCRETE AT REGULAR INTERVALS AND OVER ENTIRE SURFACE TO SOLIDLY FILL CONCRETE MECHANICAL IMMERSION TYPE VIBRATORS. INSERT VIBRATORS IN CONCRETE AT REGULAR INTERVALS AND OVER ENTIRE SURFACE TO SOLIDLY FILL CONCRETE AROUND AND BETWEEN REINFORCEMENT BARS AND INTO CORNERS AND IRREGULARITIES. VIBRATE THOROUGHLY THROUGH EACH LIFT TO THE PREVIOUS LIFT. REVIBRATION AS LATE AS THE RUNNING VIBRATOR WILL SINK THROUGH UPPER LAYERS OF ITS WEIGHT, IS RECOMMENDED. DISCONTINUE VIBRATION WHEN RISING ENTRAPPED AIR BUBBLES STOP BREAKING THE LEVELING SURFACE. DO NOT OVERVIBRATE AS THIS MAY CAUSE SEGREGATION.

F. FINISHING EXPOSED CONCRETE SURFACES:

1. THESE PROVISIONS APPLY TO ALL EXPOSED AND ALL FORMED CONCRETE, EXTERIOR OR INTERIOR, UNLESS SPECIFICALLY DETAILED OTHERWISE. PERFORM PROCEDURES PRIOR TO APPLICATION OF ANY CURING COMPOUNDS.

2. ALL SURFACES: THOROUGHLY CLEAN OF ALL STAINS, SPATTER AND LOOSE MATERIAL.

3. FINS, RIDGES, HIGH SPOTS: HONE SMOOTH WITH ABRASIVE POWER GRINDERS WHILE CONCRETE IS GREEN, IMMEDIATELY AFTER FORM REMOVAL.

4. FORM TIE HOLES AND DEEP DEPRESSIONS: FLUSH THOROUGHLY WITH CLEAN WATER AND TAMP TO OVERFULL WITH DRYPACK. CURE 10 DAYS AND HONE FLUSH AND SMOOTH.

5. ROCK POCKETS, HONEYCOMB, SAND STREAKS, DEBRIS AND VOIDS: CUT OUT AT LEAST 1 INCH DEEP WITH SIDES PERPENDICULAR TO SURFACE. FLUSH OUT WITH CLEAN WATER, COAT SURFACE WITH NEAT CEMENT PASTE AND TAMP TO OVERFULL WITH DRYPACK IN AT LEAST TWO LAYERS. CURE FOR 10 DAYS AND HONE FLUSHED AND SMOOTH.

G. CONTRACTOR SHALL VERIFY ALL SIZES AND LOCATIONS OF ALL ELECTRICAL OPENINGS AND EQUIPMENT/BUILDING PADS WITH THE ELECTRICAL DRAWINGS AND SHOP DRAWINGS. IT SHALL BE THE RESPONSIBILITY OF THE CONTRACTOR TO PROVIDE ALL OPENINGS AND SLEEVES FOR PROPER DISTRIBUTION FOR ALL UTILITIES.

CONTRACTOR SHALL REFER TO DRAWINGS OF OTHER TRADES AND VENDOR DRAWINGS FOR EMBEDDED ITEMS AND RECESSES NOT SHOWN ON STRUCTURAL DRAWINGS.

PRIOR TO POURING CONCRETE THE INDEPENDENT TESTING AGENCY SHALL INSPECT ALL FOUNDATION STEEL AND FOUNDATION SUBGRADE

10.0 STRUCTURAL STEEL

MEET OR EXCEED MANUFACTURER'S RECOMMENDATIONS.

A. UNLESS OTHERWISE NOTED, ALL DETAILING, FABRICATION AND PLACING OF REINFORCING STEEL SHALL CONFORM TO THE MANUAL OF STANDARD PRACTICE FOR DETAILING REINFORCED CONCRETE STRUCTURES (ACI 315).

B. ALL REINFORCING STEEL SHALL BE NEW BILLET STEEL, CONFORMING TO ASTM A-615, GRADE 60, DEFORMED.

C. HEATING AND WELDING OF BARS IS PROHIBITED WITH THE EXCEPTION OF WRITTEN APPROVAL BY THE STRUCTURAL ENGINEER.

D. ALL REINFORCEMENT BARS TO BE FREE FROM LOOSE RUST AND

E. UNLESS OTHERWISE NOTED, ALL REINFORCEMENT SHALL HAVE A MINIMUM CONCRETE COVERAGE OF 3 INCHES. THIS MAY REQUIRE SPACERS AND CHAIRS AS REQUIRED BY TESTING AGENCY OR CONSTRUCTION MANAGER.

F. SPLICES IN REINFORCEMENT STEEL ARE PROHIBITED, UNLESS APPROVED BY CONSTRUCTION MANAGER. ALL SPLICES MUST THEN MEET ALL APPLICABLE ASTM STANDARDS FOR SPLICING.

11.0 GROUNDING

MEET ALL APPLICABLE CODES, REQUIREMENTS OF THE CONSTRUCTION DOCUMENTS, AND AMERICAN TOWER CO. CONSTRUCTION SPECIFICATIONS.

CITY OF WILMINGTON NORTH CAROLINA
Public Services Engineering Division
APPROVED PLAN - NO PERMIT REQUIRED
Signed: _____

APPROVED CONSTRUCTION PLAN

NAME DATE

PLANNING_____

TRAFFIC_____

FIRE_____

AMERICAN TOWER® CORPORATION
496 LONG POINT ROAD
MOUNT PLEASANT, SC 29464
TEL.: (843) 971-8385
FAX: (843) 971-8889

THESE DRAWINGS AND/OR THE ACCOMPANYING SPECIFICATION AS INSTRUMENTS OF SERVICE, ARE THE EXCLUSIVE PROPERTY OF AMERICAN TOWER CORPORATION AND THEIR USE AND PUBLICATION SHALL BE RESTRICTED TO THE ORIGINAL SITE FOR WHICH THEY ARE PREPARED. REUSE, REPRODUCTION OR PUBLICATION BY ANY METHOD, IN WHOLE OR IN PART, IS PROHIBITED EXCEPT BY WRITTEN PERMISSION FROM AMERICAN TOWER CORPORATION TITLE TO THESE PLANS AND/OR SPECIFICATIONS SHALL REMAIN WITH AMERICAN TOWER CORPORATION WITHOUT PREJUDICE AND VISUAL CONTACT WITH THEM SHALL CONSTITUTE PRIMA FACIE EVIDENCE OF ACCEPTANCE OF THESE RESTRICTIONS.

BC architects engineers
5661 COLUMBIA PIKE, SUITE 200
FALLS CHURCH, VA 22041-2868
TEL: (703) 671-6000
FAX: (703) 671-6300

SHEET REVISION

NO.	DESCRIPTION	BY	DATE
1			
2			
3			
4			
5			
6			

ATC SITE NUMBER:
275164
ATC SITE NAME:
MAC RAE PARK NC
SITE ADDRESS:
4417 LAKE AVE.
WILMINGTON, NC 28409

STAMP HERE:
NORTH CAROLINA PROFESSIONAL SEAL 0024902 ENGINEER CHRISTOPHER D. MORIN
9.15.14

DRAWN BY:	AGT
CHECKED BY:	DRS
DATE DRAWN:	03-24-14
SUBMISSION:	FINAL CD'S
SHEET TITLE:	

SPECIFICATIONS

SHEET NUMBER: SP-2
REV. #