PRELIMINARY PLANS FOR:

LOCKWOOD VILLAGE APARTMENTS

CITY OF WILMINGTON, NEW HANOVER COUNTY, NORTH CAROLINA

LOCKWOOD SITE DATA TABLE
NEW HANOVER COUNTY PROPERTY IDENTIFICATION NUMBERS:
PID # R07100-003-066-000
PID # R07100-003-384-000
PID # R07100-003-065-000

PROJECT NAME:LOCKWOOD VILLAGE APARTMENTS
SITE ADDRESS:4900 S. COLLEGE ROAD, WILMINGTON, NC 28412 -2202
EXISTING ZONING: MF-M (CONDITIONAL USE)
EXISTING USE: SINGLE FAMILY
PROPOSED USE: APARTMENTS (MULTI-FAMILY)
TOTAL EXISTING ACREAGE: ±4.44 AC
PROPOSED PROPERTY ACREAGE: ±4.44 AC
PROPOSED RIGHT OF WAY ACREAGE: 0.00 AC
PROPOSED TOTAL ACREAGE: ±4.44 AC
TOTAL PARKING REQUIRED: 115 SPACES (2/2 BDRM UNIT + 1.5/ 1 BDRM UNIT +1 OFFICE SPACE)
TOTAL PARKING PROVIDED: 117 SPACES (INCL. 6 H/C SPACES)
OPEN SPACE PROVIDED: 41.9% OF TOTAL SITE (1.86 AC)
TOTAL DISTURBED AREA: 4.92 AC (SITE = 4.44 AC, SS OUTFALL = 0.48 AC (IN PUBLIC R/W))

BUILDING
PROPOSED BUILDING USE: MULTI-FAMILY DEVELOPMENT
TOTAL NUMBER OF APARTMENT BUILDINGS: 5
OFFICE/ COMMUNITY BUILDING: 1
NUMBER OF 1 BEDROOM UNITS: 12
NUMBER OF 2 BEDROOM UNITS: 48
TOTAL NUMBER OF UNITS: 60
TOTAL BUILDING AREA: EXISTING = 3,210 SF, PROPOSED = 62,776 SF
BUILDING HEIGHT: EXISTING = 15 LF, PROPOSED = 34 LF

BUILDING TYPES
TYPE 1= OFFICE/ COMMUNITY BLDG
TYPE 2= 12- 2 BEDROOM UNITS
TYPE 3= 6-1 BEDROOM UNITS & 6-2 BEDROOM UNITS

DISTRIBUTION
TYPE 1= BLDG 1
TYPE 2= BLDG 2,4,6
TYPE 3= BLDG 3,5

IMPERVIOUS SURFACE
EXISTING = 0.142 AC.
PROPOSED = 2.05 AC.

SITE AMENITIES
EXTERIOR:
- (1) PLAYGROUND/ TOT LOT
- (1) COVERED PICNIC AREA W/ (3) TABLES
- (4) GRILLS
- (4) SITTING AREAS WITH BENCHES
- (1) GAZEBO
- (4) BIKE RACKS

COMMUNITY BLDG:
- DINING AREA
- WET BAR & REFRIGERATOR
- GAME/ CRAFT AREA
- READING AREA- LIBRARY
- TV & SITTING AREA
- LAUNDRY AREA
- RESIDENT COMPUTER CENTER
- SCREENED PORCH W/ ROCKING CHAIRS
- COVERED MAIL KIOSK

VICINITY MAP
(NOT TO SCALE)

GENERAL NOTES
1. PRIOR TO ANY CLEARING, GRADING OR CONSTRUCTION ACTIVITY, TREE PROTECTION FENCING SHALL BE INSTALLED AROUND PROTECTED TREES OR GROVES OF TREES. NO CONSTRUCTION WORKERS, TOOLS, MATERIALS, OR VEHICLES ARE PERMITTED WITHIN THE TREE PROTECTION FENCING.
2. ANY TREES AND/OR AREAS DESIGNATED TO BE PROTECTED MUST BE PROPERLY BARRICADED WITH FENCING AND PROTECTED THROUGHOUT CONSTRUCTION TO INSURE THAT NO CLEARING, GRADING OR STAGING OF MATERIALS WILL OCCUR IN THOSE AREAS.
3. NO EQUIPMENT IS ALLOWED ON SITE UNTIL ALL TREE PROTECTION FENCING AND SILT FENCING IS INSTALLED AND APPROVED. PROTECTIVE FENCING IS TO BE MAINTAINED THROUGHOUT THE DURATION OF THE PROJECT, AND CONTRACTORS SHALL RECEIVED ADEQUATE INSTRUCTION ON TREE PROTECTION METHODS.
4. ALL PAVEMENT MARKINGS IN PUBLIC RIGHTS-OF-WAY AND FOR DRIVEWAYS ARE TO BE THERMOPLASTIC AND MEET CITY AND/OR NCDOT STANDARDS.
5. IT SHALL BE THE RESPONSIBILITY OF THE SUBDIVIDER TO ERECT OFFICIAL STREET NAME SIGNS AT ALL INTERSECTIONS ASSOCIATED WITH THE SUBDIVISION IN ACCORDANCE WITH "THE TECHNICAL STANDARDS AND SPECIFICATIONS MANUAL" THE SUBDIVIDER MAY ACQUIRE AND ERECT OFFICIAL STREET NAME SIGNS OR MAY CHOOSE TO CONTRACT WITH THE CITY TO INSTALL THE STREET SIGNS AND SUBDIVIDER SHALL PAY THE COST OF SUCH INSTALLATION. CONTACT TRAFFIC ENGINEERING AT 910-341-7888 TO DISCUSS INSTALLATION OF TRAFFIC AND STREET NAME SIGNS. PROPOSED STREET NAMES MUST BE APPROVED PRIOR TO INSTALLATION OF STREET NAME SIGNS.
6. TRAFFIC CONTROL DEVICES (INCLUDING SIGNS AND PAVEMENT MARKINGS) IN AREAS OPEN TO PUBLIC TRAFFIC ARE TO MEET MUTCD (MANUAL ON UNIFORM TRAFFIC CONTROL DEVICES) STANDARDS.
7. CONTACT TRAFFIC ENGINEERING AT 910-341-7888 TO ENSURE THAT ALL TRAFFIC SIGNAL FACILITIES AND EQUIPMENT ARE SHOWN ON THE PLAN.
8. CALL TRAFFIC ENGINEERING AT 910-341-7888 FORTY-EIGHT (48) HOURS PRIOR TO ANY EXCAVATION IN THE RIGHT-OF-WAY.
9. TRAFFIC ENGINEERING MUST APPROVE OF PAVEMENT MARKING PRIOR TO ACTUAL STRIPING.
10. ALL PARKING STALL MARKINGS AND LANE ARROWS WITHIN THE PARKING AREAS SHALL BE WHITE.
11. ALL TRAFFIC CONTROL SIGNS AND MARKINGS OFF THE RIGHT-OF-WAY ARE TO BE MAINTAINED BY THE PROPERTY OWNER IN ACCORDANCE WITH MUTCD STANDARDS.
12. STOP SIGNS AND STREET SIGNS TO REMAIN IN PLACE DURING CONSTRUCTION.
13. TACTILE WARNING MATS WILL BE INSTALLED ON ALL WHEELCHAIR RAMPS.
14. A UTILITY CUT PERMIT IS REQUIRED FOR EACH OPEN CUT OF A CITY STREET.
15. ANY BROKEN OR MISSING SIDEWALK PANELS, DRIVEWAY PANELS, AND CURBING WILL BE REPLACED.
16. CONTACT KAREN DIXON AT 910-341-7888 TO DISCUSS STREET LIGHTING OPTIONS.
17. WATER AND SEWER SERVICE SHALL MEET CAPE FEAR PUBLIC UTILITY AUTHORITY (CFPUA) DETAILS AND SPECIFICATIONS.
18. PROJECT SHALL COMPLY WITH CFPUA CROSS CONNECTION CONTROL REQUIREMENTS. WATER METER(S) CANNOT BE RELEASED UNTIL ALL REQUIREMENTS ARE MET AND THE STATE HAS GIVEN THEIR FINAL APPROVAL. CALL 910-343-3910 FOR INFORMATION.
19. IF THE CONTRACTOR DESIRES (RPZ) BACKFLOW PREVENTION DEVICE ON THE DEVELOPER'S SIDE OF THE WATER METER BOX.
20. ANY IRRIGATION SYSTEM SUPPLIED BY CFPUA WATER SHALL COMPLY WITH THE CFPUA CROSS CONNECTION CONTROL REGULATIONS. CALL 919-343-3910 FOR INFORMATION.
21. ANY IRRIGATION SYSTEM SHALL BE EQUIPPED WITH A RAIN AND FREEZER SENSOR.
22. ANY BACKFLOW PREVENTION DEVICES REQUIRED BY THE CFPUA WILL NEED TO BE ON THE LIST OF APPROVED DEVICES BY USCFCCCHR OR ASSE.
23. CONTRACTOR TO FIELD VERIFY EXISTING WATER AND SEWER SERVICE LOCATIONS, SIZES, AND MATERIALS PRIOR TO CONSTRUCTION. ENGINEER TO BE NOTIFIED OF ANY CONFLICTS.
24. CONTRACTOR SHALL MAINTAIN ALL-WEATHER ACCESS FOR EMERGENCY VEHICLES AT ALL TIMES DURING CONSTRUCTION.
25. UNDERGROUND FIRE LINE(S) MUST BE PERMITTED AND INSPECTED BY THE WILMINGTON FIRE DEPARTMENT FROM THE PUBLIC RIGHT-OF-WAY TO THE BUILDING. CONTACT THE WILMINGTON FIRE DEPARTMENT DIVISION OF FIRE AND LIFE SAFETY AT 910-341-0696.
26. NO OBSTRUCTIONS ARE PERMITTED IN THE SPACE BETWEEN THIRTY (30) INCHES AND TEN (10) FEET ABOVE THE GROUND WITHIN THE TRIANGULAR SITE DISTANCE.
27. CONTACT THE NORTH CAROLINA ONE CALL CENTER AT 1-800-632-4949 PRIOR TO DOING ANY DIGGING, CLEARING, OR GRADING.
28. INSTALL REFLECTORS PER CITY AND NCDOT STANDARDS. TRAFFIC ENGINEERING MUST APPROVE OF PAVEMENT MARKING LAYOUT TO ACTUAL STRIPING.
29. CONTACT TRAFFIC ENGINEERING AT 910-341-7888 FORTY-EIGHT (48) HOURS PRIOR TO ANY EXCAVATION IN THE RIGHT-OF-WAY TO ENSURE THAT ALL TRAFFIC SIGNAL FACILITIES AND EQUIPMENT ARE PROPERLY LOCATED.
30. IMMEDIATELY NOTIFY CITY OF WILMINGTON TRAFFIC ENGINEERING AT 910-341-7888 IF ANY TRAFFIC SIGNAL FACILITIES OR CITY-OWNED STREETLIGHT FACILITIES ARE DAMAGED.
31. DAMAGED FACILITIES SHALL BE REPLACED, BY AN APPROVED CONTRACTOR, ACCORDING TO STANDARD NCDOT REPLACEMENT SCHEDULES AND CURRENT NCDOT DESIGN STANDARDS.
32. ALL REPAIR/REPLACEMENT OF TRAFFIC SIGNAL INFRASTRUCTURE SHALL BE COORDINATED WITH THE CITY OF WILMINGTON TRAFFIC ENGINEERING DIVISION.

INDEX TO PLANS

C-0.0	COVER SHEET
S-1.0	BOUNDARY & TOPOGRAPHIC SURVEY
C-1.0	SITE PLAN
C-2.0	UTILITY PLAN
C-2.1	SANITARY SEWER PLAN/PROFILE
C-3.0	GRADING & DRAINAGE PLAN
C-4.0	EROSION CONTROL PLAN
S-2.0	TREE LOCATION SURVEY
L-1.0	LANDSCAPE PLAN
L-1.1	STORMWATER POND PLANTING PLAN
D-1.0	CONSTRUCTION DETAILS
D-1.2	CONSTRUCTION DETAILS
D-1.3	CONSTRUCTION DETAILS
SS-1	CFPU SEWER DETAIL
SS-2	CFPU SEWER DETAIL
WSD-1	CFPU WATER DETAIL
WSD-2	CFPU WATER DETAIL

b. **Owner's/Developer's Certification**

"I/We hereby certify that any clearing, grading, construction or development, or all of these, will be done pursuant to this plan and that the applicable Stormwater Management conditions and requirements of the City of Wilmington, the State of North Carolina and the Federal Government and its agencies are hereby made part of this plan."

Signature:________________
Printed Name and Title:________________
Date:________

a. **Designers Certification**

"I hereby certify that this plan has been prepared in accordance with the latest Wilmington Standards and Specifications for Storm Water Management and Chapter 20 of the Code of Ordinances of the City of Wilmington."

Signature:
Printed Name and Title:________________
Date:________ Registration Number: ________

FOR REVIEW ONLY-
NOT FOR CONSTRUCTION

PLAN IS SUBJECT TO REVISIONS DURING THE CONSTRUCTION APPROVAL PROCESS

THIS DRAWING IS THE PROPERTY OF:
Spaulding & Norris, PA
and is not to be reproduced or copied in whole or in part without permission from Spaulding & Norris, PA. This drawing is not to be used on any other project and is to be returned to Spaulding & Norris, PA, upon request.

CITY OF WILMINGTON
NORTH CAROLINA
Public Services • Engineering Division
APPROVED STORMWATER MANAGEMENT PLAN
Date:______ Permit #______
Signed: ________

Approved Construction Plan

	Name	Date
Planning		
Traffic		
Fire		

NO.	REVISION	DATE
1.	PER CFPUA COMMENTS	2/27/2012
2.	PER CFPUA COMMENTS	3/13/2012
3.	PER REVISED BLDG. FOOTPRINT	1/18/2013
4.	PER CFPUA COMMENTS	9/13/2013
5.	PER TRC CofW COMMENTS	11/14/2013

SEAL: NORTH CAROLINA PROFESSIONAL SEAL 19375 ENGINEER THOMAS ... 11-14-13

SPAULDING & NORRIS, PA
Design Consultants
972 Trinity Road
Raleigh, North Carolina 27607
Phone (919) 854-7990 Fax (919) 854-7925

PREPARED FOR :
SNW, LLP
972 TRINITY ROAD
RALEIGH, NC 27607
DATE : 1-18-12
S&N FIRM CERTIFICATION #: C-1875
PROJECT ENGINEER:
STEPHANIE L. NORRIS, P.E.
PROJECT CADD DESIGNER:
BRIAN W. DOWNS
PROJECT SURVEYOR:

LOCKWOOD VILLAGE APTS
CITY OF WILMINGTON, NEW HANOVER COUNTY, NORTH CAROLINA
CONSTRUCTION DRAWINGS
COVER SHEET

DRAWING SHEET
C-0.0

PROJECT NUMBER
732-11

F:\701 - 750 Projects\732-11 Simpson Property (SNW)\Sketch Plan\732-11 C0000.dwg Nov 14, 2013 - 7:26pm BY:BrianD

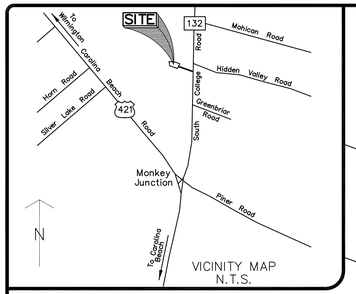

VICINITY MAP
N.T.S.

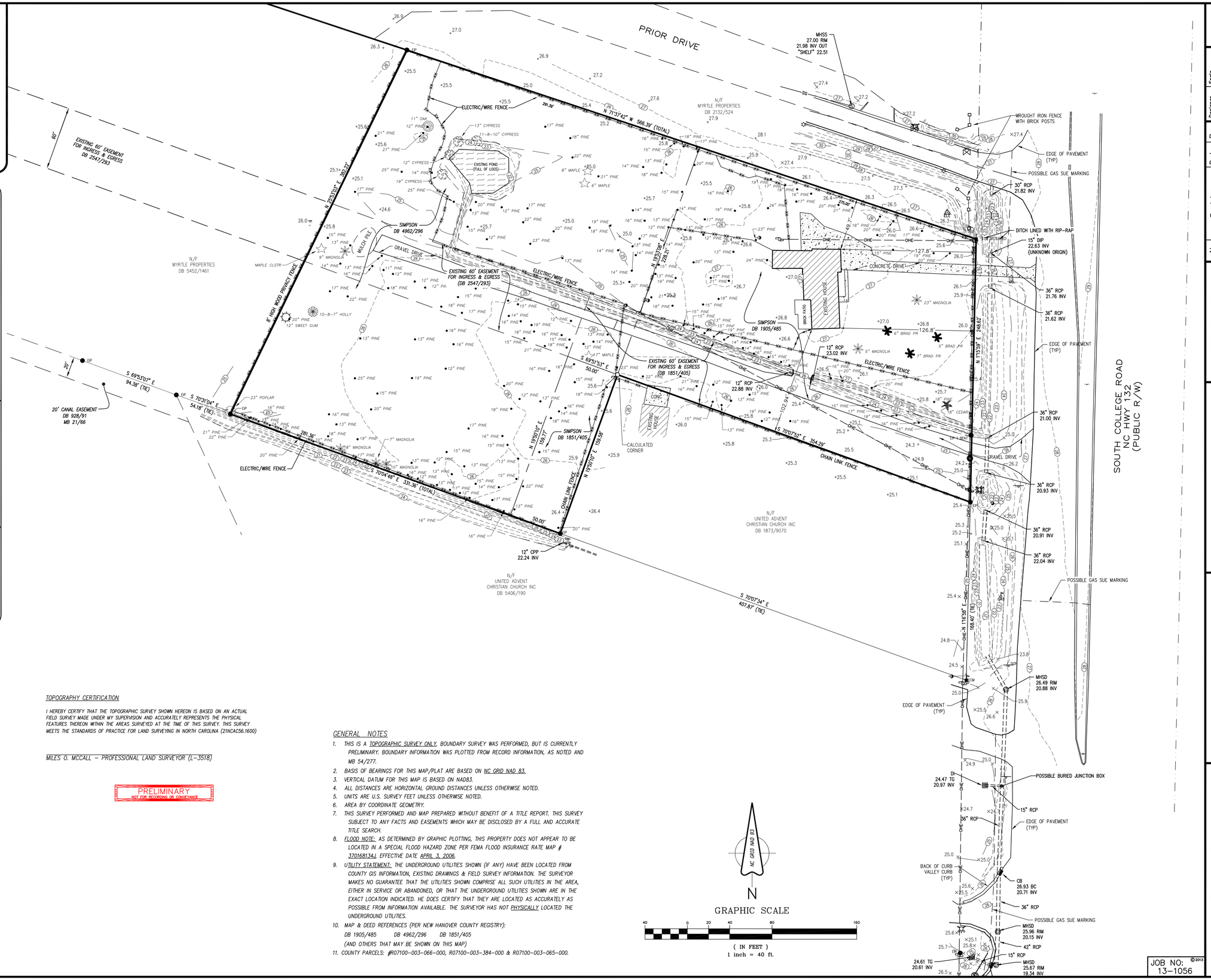

SYMBOL LEGEND:

- EXISTING IRON *PIPE / *ROD
- REBAR SET
- EXISTING CONCRETE MONUMENT
- EXISTING RIGHT-OF-WAY MONUMENT
- EXISTING NCGS MONUMENT
- WATER METER
- WATER VALVE
- FIRE HYDRANT
- FIRE DEPARTMENT CONNECTION
- IRRIGATION CONTROL VALVE
- WATER MANHOLE
- WELL (AS NOTED)
- AIR RELEASE VALVE
- BLOW-OFF VALVE
- STORM DRAIN MANHOLE
- CATCH BASIN
- DROP / YARD INLET
- FLARED END SECTION
- SEWER MANHOLE
- SEWER CLEAN-OUT
- UTILITY POLE
- GUY WIRE ANCHOR
- ELECTRIC PEDESTAL
- ELECTRIC METER
- LIGHT / LIGHT POLE
- ELECTRIC MANHOLE
- FIBER OPTIC MARKER
- TELEPHONE PEDESTAL
- TELEPHONE MANHOLE / VAULT
- GAS METER
- GAS VALVE
- GAS MARKER
- MAIL BOX
- SIGN
- BOLLARD
- UTILITY MANHOLE
- BORE HOLE LOCATION
- +34.3 GROUND SHOT ELEVATION

LINETYPE LEGEND:

- SURVEYED LINES (BOUNDARY)
- LINES NOT SURVEYED (ADJOINERS)
- RIGHT-OF-WAY
- FENCE
- STORM PIPE
- OVERHEAD ELECTRIC
- MINOR CONTOUR WITH ELEVATION
- MAJOR CONTOUR WITH ELEVATION
- RIPRAP

ABBREVIATIONS:

EIP	EXISTING IRON PIPE	MHSD	STORM DRAIN MANHOLE
EIR	EXISTING IRON ROD	N/F	NOW OR FORMERLY
RBS	REBAR SET	MB	MAP BOOK / CABINET
MON	MONUMENT	DB	DEED BOOK
NCGS	NORTH CAROLINA GEODETIC SURVEY	PG	PAGE
INV	INVERT	BLDG	BUILDING
ELEV	ELEVATION	EL.	ELEVATION
MHSS	SEWER MANHOLE	[E]	EXISTING
RCP	REINFORCED CONCRETE PIPE		

TOPOGRAPHY CERTIFICATION

I HEREBY CERTIFY THAT THE TOPOGRAPHIC SURVEY SHOWN HEREON IS BASED ON AN ACTUAL FIELD SURVEY MADE UNDER MY SUPERVISION AND ACCURATELY REPRESENTS THE PHYSICAL FEATURES THEREON WITHIN THE AREAS SURVEYED AT THE TIME OF THIS SURVEY. THIS SURVEY MEETS THE STANDARDS OF PRACTICE FOR LAND SURVEYING IN NORTH CAROLINA (21NCAC56.1600)

MILES O. MCCALL – PROFESSIONAL LAND SURVEYOR (L-3518)

PRELIMINARY
NOT FOR RECORDING OR CONVEYANCE

GENERAL NOTES

1. THIS IS A TOPOGRAPHIC SURVEY ONLY. BOUNDARY SURVEY WAS PERFORMED, BUT IS CURRENTLY PRELIMINARY. BOUNDARY INFORMATION WAS PLOTTED FROM RECORD INFORMATION, AS NOTED AND MB 54/277.
2. BASIS OF BEARINGS FOR THIS MAP/PLAT ARE BASED ON NC GRID NAD 83.
3. VERTICAL DATUM FOR THIS MAP IS BASED ON NAD83.
4. ALL DISTANCES ARE HORIZONTAL GROUND DISTANCES UNLESS OTHERWISE NOTED.
5. UNITS ARE U.S. SURVEY FEET UNLESS OTHERWISE NOTED.
6. AREA BY COORDINATE GEOMETRY.
7. THIS SURVEY PERFORMED AND MAP PREPARED WITHOUT BENEFIT OF A TITLE REPORT. THIS SURVEY SUBJECT TO ANY FACTS AND EASEMENTS WHICH MAY BE DISCLOSED BY A FULL AND ACCURATE TITLE SEARCH.
8. FLOOD NOTE: AS DETERMINED BY GRAPHIC PLOTTING, THIS PROPERTY DOES NOT APPEAR TO BE LOCATED IN A SPECIAL FLOOD HAZARD ZONE PER FEMA FLOOD INSURANCE RATE MAP # 3701681341 EFFECTIVE DATE APRIL 3, 2006.
9. UTILITY STATEMENT: THE UNDERGROUND UTILITIES SHOWN (IF ANY) HAVE BEEN LOCATED FROM COUNTY GIS INFORMATION, EXISTING DRAWINGS & FIELD SURVEY INFORMATION. THE SURVEYOR MAKES NO GUARANTEE THAT THE UTILITIES SHOWN COMPRISE ALL SUCH UTILITIES IN THE AREA, EITHER IN SERVICE OR ABANDONED, OR THAT THE UNDERGROUND UTILITIES SHOWN ARE IN THE EXACT LOCATION INDICATED. HE DOES CERTIFY THAT THEY ARE LOCATED AS ACCURATELY AS POSSIBLE FROM INFORMATION AVAILABLE. THE SURVEYOR HAS NOT PHYSICALLY LOCATED THE UNDERGROUND UTILITIES.
10. MAP & DEED REFERENCES (PER NEW HANOVER COUNTY REGISTRY):
    DB 1905/485 DB 4962/296 DB 1851/405
    (AND OTHERS THAT MAY BE SHOWN ON THIS MAP)
11. COUNTY PARCELS: #R07100-003-066-000, R07100-003-384-000 & R07100-003-065-000.

JOB NO: 13-1056

©2013

Sheet No.	Scale 1" = 40'	Designer	Drawn By	Checked By	Job No.
1 of 1	07/26/13	EJB		ACS	13-1056

No.	Revision	Date	By

PREPARED FOR:
SNW, LLP
972 TRINITY ROAD
RALEIGH, NC 27607

TOPOGRAPHIC SURVEY

LOCKWOOD VILLAGE

Masonboro Township New Hanover County North Carolina

ATLANTIC COAST SURVEY, PLLC
P-0822
PO Box 12588 Wilmington, NC 28405
(910) 292-4889 www.atlanticcoastsurvey.com

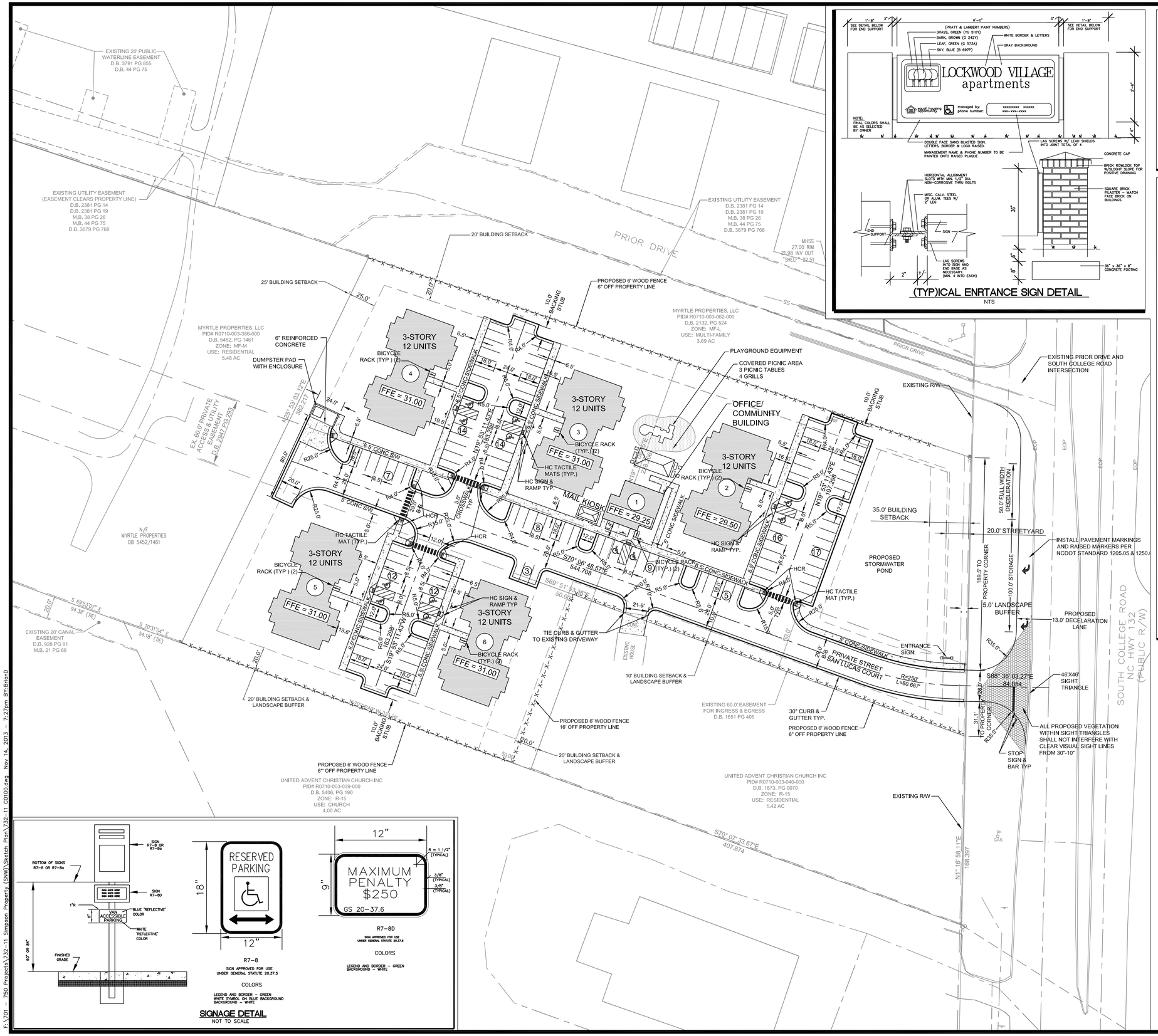

(TYP)ICAL ENRTANCE SIGN DETAIL

NTS

GENERAL NOTES

1.) BOUNDARY AND TOPOGRAPHIC DATA TAKEN FROM DIGITAL FILE FROM ATLANTIC COAST SURVEY, PLLC DATED 09/05/13 TREE SURVEY PROVIDED BY ATLANTIC COAST SURVEY, PLLC DATED 01/13/12.

2.) THIS SITE DOES NOT CONTAIN 100 OR 500 YEAR FLOODPLAIN PER FIRM MAP NO. 3720313400J PANEL 3134, EFFECTIVE DATE APRIL 3, 2006, TAKEN FROM NCFLOODMAPS.COM

3.) THE SITE DOES NOT CONTAIN WETLANDS OR JURISDICTIONAL FEATURES PER SITE INVESTIGATION BY LAND MANAGEMENT GROUP IN AUGUST 2011 AND CONFERENCE BY USACE AND NCDWQ IN SEPTEMBER 2011.

4.) THE CONTRACTOR SHALL CONTACT " NORTH CAROLINA ONE CALL" AT 800-632-4949 FOR ASSISTANCE IN LOCATING EXISTING UTILITIES. CALL AT LEAST 48 HOURS PRIOR TO ANY DIGGING.

5.) THE CONTRACTOR SHALL FIELD VERIFY CONDITIONS PRIOR TO STARTING CONSTRUCTION AND NOTIFY THE ENGINEER OF ANY DESCREPANCIES. CONFLICTS INVOLVING PUBLIC WATER, SANITARY SEWER, AND STORM DRAINAGE CONSTRUCTION SHALL BE RESOLVED TO THE SATISFACTION OF THE CITY OF WILMINGTON AND CFPUA.

6.) THE CONTRACTOR IS RESPONSIBLE FOR INVESTIGATING SOIL CONDITIONS ON SITE. THE CONTRACTOR SHALL NOTIFY THE ENGINEER IMMEDIATELY OF ANY UNSUITABLE MATERIAL UPON FIRST CONTACT.

LOCKWOOD SITE DATA TABLE

NEW HANOVER COUNTY PROPERTY IDENTIFICATION NUMBERS:
PID # R07100-003-066-000
PID # R07100-003-384-000
PID # R07100-003-065-000

PROJECT NAME:LOCKWOOD VILLAGE APARTMENTS
SITE ADDRESS:4900 S. COLLEGE ROAD, WILMINGTON, NC 28412 -2202
EXISTING ZONING: MF-M (CONDITIONAL USE)
EXISTING USE: SINGLE FAMILY
PROPOSED USE: APARTMENTS (MULTI-FAMILY)
TOTAL EXISTING ACREAGE: ±4.44 AC
PROPOSED PROPERTY ACREAGE: ±4.44 AC
PROPOSED RIGHT OF WAY ACREAGE: 0.00 AC
PROPOSED TOTAL ACREAGE: ±4.44 AC
TOTAL PARKING REQUIRED: 115 SPACES (2/2 BDRM UNIT + 1.5/ 1 BDRM UNIT +1 OFFICE SPACE)
TOTAL PARKING PROVIDED: 117 SPACES (INCL. 6 H/C SPACES)
OPEN SPACE PROVIDED: 41.9% OF TOTAL SITE (1.86 AC)
TOTAL DISTURBED AREA: 4.92 AC (SITE = 4.44 AC, SS OUTFALL = 0.48 AC (IN PUBLIC R/W))

BUILDING
PROPOSED BUILDING USE: MULTI-FAMILY DEVELOPMENT
TOTAL NUMBER OF APARTMENT BUILDINGS: 5
OFFICE/ COMMUNITY BUILDING: 1
NUMBER OF 1 BEDROOM UNITS: 12
NUMBER OF 2 BEDROOM UNITS: 48
TOTAL NUMBER OF UNITS: 60
TOTAL BUILDING AREA: EXISTING = 3,210 SF, PROPOSED = 62,776 SF
BUILDING HEIGHT: EXISTING = 15 LF, PROPOSED = 34 LF

BUILDING TYPES
TYPE 1= OFFICE/ COMMUNITY BLDG
TYPE 2= 12- 2 BEDROOM UNITS
TYPE 3= 6-1 BEDROOM UNITS & 6-2 BEDROOM UNITS

DISTRIBUTION
TYPE 1= BLDG 1
TYPE 2= BLDG 2,4,6
TYPE 3= BLDG 3,5

IMPERVIOUS SURFACE
EXISTING = 0.142 AC.
PROPOSED = 2.05 AC.

SITE AMENITIES
EXTERIOR:
(1) PLAYGROUND/ TOT LOT
(1) COVERED PICNIC AREA W/ (3) TABLES
(4) GRILLS
(4) SITTING AREAS WITH BENCHES
(1) GAZEBO
(5) BIKE RACKS: 10 BICYCLES REQU.(25 PARK. SPACES/5 BICYCLES+100 ADD. PARK./5 BYCYCLES)
*NOTE: 1 BIKE RACK AT EA. BUILDING, EA. CAN MOUNT 2 BICYCLES.
COMMUNITY BLDG:
DINING AREA
WET BAR & REFRIGERATOR
GAME/ CRAFT AREA
READING AREA- LIBRARY
TV & SITTING AREA
LAUNDRY AREA
RESIDENT COMPUTER CENTER
SCREENED PORCH W/ ROCKING CHAIRS
COVERED MAIL KIOSK

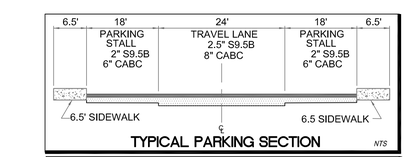

TYPICAL PARKING SECTION

NTS

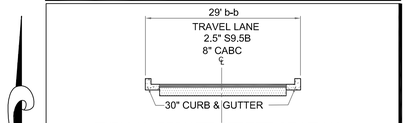

TYPICAL PRIVATE STREET SECTION

NTS

SIGNAGE DETAIL

NOT TO SCALE

THIS DRAWING IS THE PROPERTY OF:
Spaulding & Norris, PA
and is not to be reproduced or copied in whole or in part without permission from Spaulding & Norris, PA. This drawing is not to be used on any other project and is to be returned to Spaulding & Norris, PA, upon request.

GRAPHIC SCALE

40 0 20 40 80 160

(IN FEET)
1 inch = 40 ft.

FOR REVIEW ONLY-
NOT FOR CONSTRUCTION

PLAN IS SUBJECT TO REVISIONS DURING THE CONSTRUCTION APPROVAL PROCESS

NO.	REVISION	DATE
1.	PER CFPUA COMMENTS	2/27/2012
2.	PER CFPUA COMMENTS	3/13/2012
3.	PER REVISED BLDG. FOOTPRINT	1/18/2013
4.	PER TRC COMMENTS	8/12/2013
5.	PER TRC CWR COMMENTS	11/14/2013

SEAL: NORTH CAROLINA PROFESSIONAL SEAL 19437 ENGINEER THOMAS L. NORRIS 11-14-13

S&N SPAULDING & NORRIS, PA
Design Consultants
972 Trinity Road
Raleigh, North Carolina 27607
Phone (919) 854-7990 Fax (919) 854-7925

PREPARED FOR :
SNW, LLP
972 TRINITY ROAD
RALEIGH, NC 27607
DATE : 1-18-12
S&N FIRM CERTIFICATION #: C-1875
PROJECT ENGINEER:
STEPHANIE L. NORRIS, P.E.
PROJECT CADD DESIGNER:
BRIAN H. JONES
PROJECT SURVEYOR:

LOCKWOOD VILLAGE APTS

CITY OF WILMINGTON, NEW HANOVER COUNTY, NORTH CAROLINA

CONSTRUCTION DRAWINGS
SITE PLAN

DRAWING SHEET
C-1.0

PROJECT NUMBER
732-11

F:\701 - 750 Projects\732-11 Simpson Property (SNW)\Sketch Plan\732-11 C0100.dwg Nov 14, 2013 - 7:27pm BY:BrianD

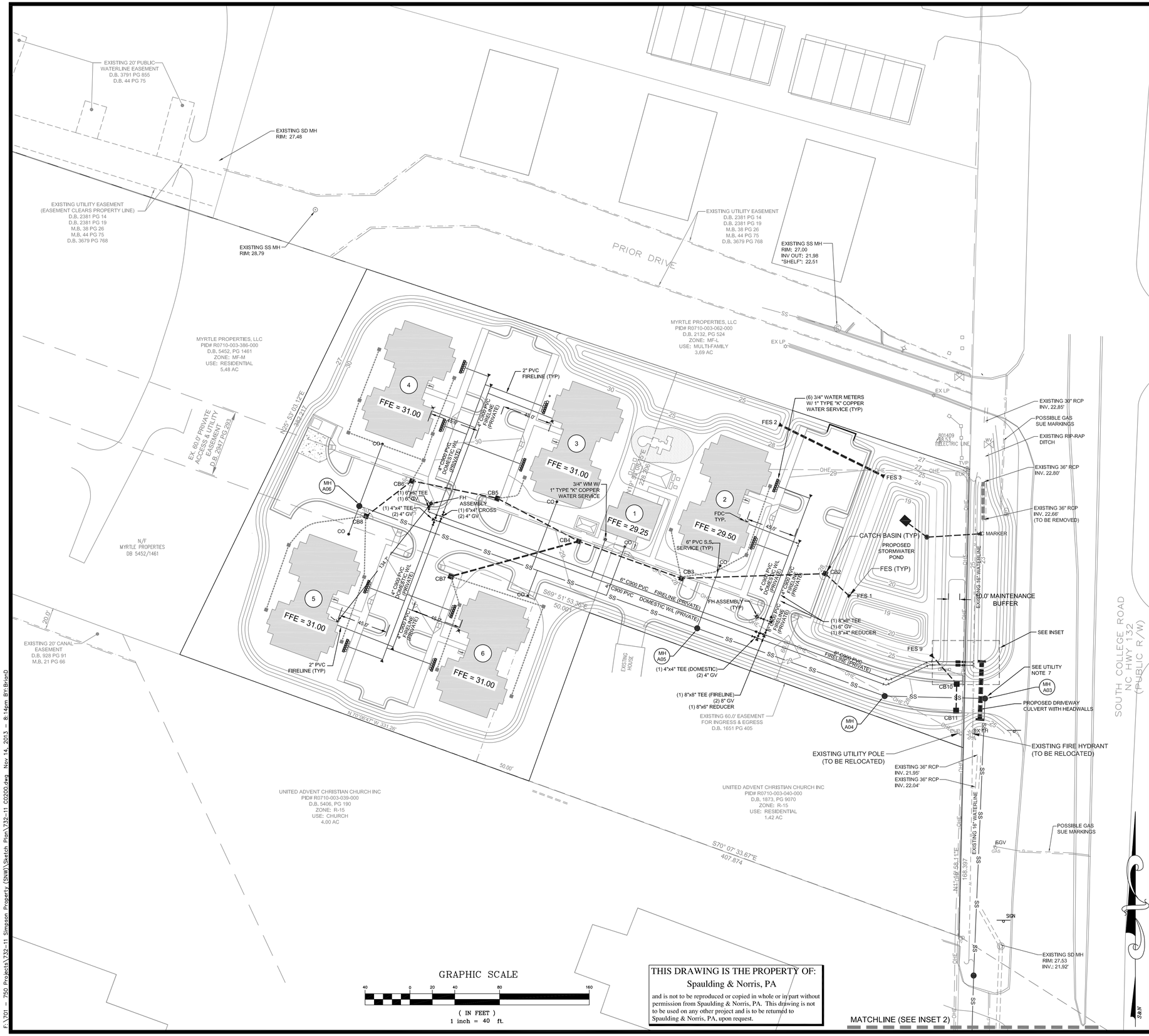

THIS DRAWING IS THE PROPERTY OF:
Spaulding & Norris, PA
and is not to be reproduced or copied in whole or in part without permission from Spaulding & Norris, PA. This drawing is not to be used on any other project and is to be returned to Spaulding & Norris, PA. upon request.

GENERAL NOTES

1.) BOUNDARY AND A PORTION OF TOPOGRAPHIC DATA TAKEN FROM DIGITAL FILE FROM ATLANTIC COAST SURVEY, PLLC DATED 01/13/12. TREE SURVEY PROVIDED BY ATLANTIC COAST SURVEY, PLLC DATED 01/13/12. A PORTION OF TOPOGRAPHIC DATA IS TAKEN FROM NEW HANOVER COUNTY GIS ON 9/01/1.

2.) THIS SITE DOES NOT CONTAIN 100 OR 500 YEAR FLOODPLAIN PER FIRM MAP NO. 3720313400J PANEL 3134. EFFECTIVE DATE APRIL 3, 2006. TAKEN FROM NCFLOODMAPS.COM

3.) THE SITE DOES NOT CONTAIN WETLANDS OR JURISDICTIONAL FEATURES PER SITE INVESTIGATION BY LAND MANAGEMENT GROUP IN AUGUST 2011 AND CONFERENCE BY USACE AND NCDWQ IN SEPTEMBER 2011.

4.) THE CONTRACTOR SHALL CONTACT " NORTH CAROLINA ONE CALL" AT 800-632-4949 FOR ASSISTANCE IN LOCATING EXISTING UTILITIES. CALL AT LEAST 48 HOURS PRIOR TO ANY DIGGING.

5.) EXISTING CONDITIONS AND UTILITIES SHOWN ARE BASED ON INFORMATION PROVIDED BY NEW HANOVER COUNTY GIS. THE CONTRACTOR SHALL FIELD VERIFY CONDITIONS PRIOR TO STARTING CONSTRUCTION AND NOTIFY THE ENGINEER OF ANY DESCREPANCIES. CONFLICTS INVOLVING PUBLIC WATER, SANITARY SEWER, AND STORM DRAINAGE CONSTRUCTION SHALL BE RESOLVED TO THE SATISFACTION OF THE CITY OF WILMINGTON.

6.) THE CONTRACTOR IS RESPONSIBLE FOR INVESTIGATING SOIL CONDITIONS ON SITE. THE CONTRACTOR SHALL NOTIFY THE ENGINEER IMMEDIATELY OF ANY UNSUITABLE MATERIAL UPON FIRST CONTACT.

PROPOSED SEWER FLOW:

60 UNITS	@ 240 GPD/UNIT	= 14,400 GPD
OFFICE BUILDING @ 100 GPD	=	100 GPD
TOTAL PROPOSED FLOW:	=	14,500 GPD

PROPOSED WATER FLOW:

60 UNITS	@ 400 GPD/UNIT	= 24,000 GPD
OFFICE BUILDING @ 150 GPD	=	150 GPD
TOTAL PROPOSED FLOW:	=	24,150 GPD

UTILITY NOTES

1. EXISTING WELL LOCATION UNKNOWN. CONTRACTOR TO LOCATE AND CAP PER PUBLIC WATER SUPPLY STANDARDS.
2. EXISTING SEPTIC FIELD LOCATION UNKNOWN. CONTRACTOR TO LOCATE AND REMOVE.
3. WATER AND SANITARY SEWER PROVIDED BY CAPE FEAR PUBLIC UTILITY AUTHORITY.
4. CONTRACTOR SHALL VERIFY LOCATION OF ALL EXISTING UTILITIES, AND SHALL BE RESPONSIBLE FOR ANY DAMAGE RESULTING FROM HIS ACTIVITIES, CALL UTILITY LOCATOR SERVICE 48 HOURS PRIOR TO ANY CONSTRUCTION.
5. ALL CONSTRUCTION & MATERIALS SHALL BE IN ACCORDANCE WITH THE CITY OF WILMINGTON STANDARDS AND SPECIFICATIONS.
6. ALL WATER AND SEWER LINES SHALL BE INSTALLED IN STRICT ACCORDANCE WITH THE LATEST EDITION OF THE NC PLUMBING CODE.
7. SANITARY SEWER SHALL BE PRIVATE UPSTREAM OF MH A03.
8. FIRE HYDRANTS CANNOT BE FURTHUR THAN 5' FROM THE CURB.
9. PARKING AND LANDSCAPING CANNOT BLOCK FIRE HYDRANTS OR FDC'S.
10. FDC'S CAN BE NO FURTHUR THAN 40' FROM FIRE DEPARTMENT VEHICLE PLACEMENT.
11. FDC'S CAN BE NO FURTHUR THAN 150' FROM A FIRE HYDRANT.
12. ALL WEATHER ACCESS ROAD MUST BE MAINTAINED AROUND CONSTRUCTION SITE AT ALL TIMES.
13. NEW HYDRANTS MUST BE BROUGHT INTO SERVICE PRIOR TO COMBUSTIBLE MATERIALS BEING DELIVERED TO THE JOB SITE.
14. TYPE OF CONSTRUCTION IS: WOOD FRAME BUILDING WITH VINYL AND BRICK VENEER.
15. HYDRANTS SHALL BE SUFFICINT NUMBERS TO ACCOMMODATE BASE FIRE FLOW REQUIREMENTS OF STRUCTURE.
16. IN ADDITION T THE STANDARD COMMENTS, ADDITIONAL FIRE PROTECTION AND ACCESSIBILITY REQUIREMENTS MAY BE REQUIRED DUE TO ANY SPECIAL CIRCUMSTANCES CONCERNING THE PROJECT.
17. PRIVATE UNDERGROUND FIRE LINES REQUIRE A SEPARATE UNDERGROUND FIRE LINE PERMIT FORMT HE WILMINGTON FIRE AND SAFETY DIVISION 910-343-0696.

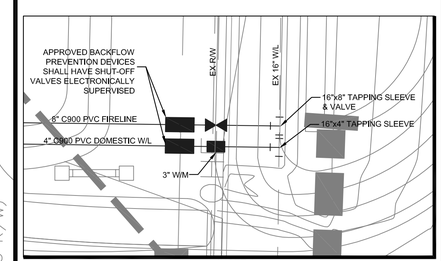

INSET 1
SCALE= 1"=10'

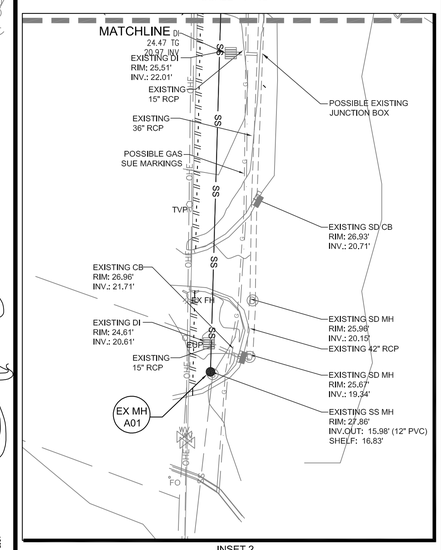

INSET 2
SCALE= 1"=40'

NO.	REVISION	DATE
1.	PER CFPUA COMMENTS	2/27/2012
2.	PER CFPUA COMMENTS	3/13/2012
3.	PER REVISED BLDG. FOOTPRINT	1/18/2013
4.	PER TRC COMMENTS	8/12/2013
5.	PER TRC CIVIL COMMENTS	11/14/2013

SEAL: NORTH CAROLINA PROFESSIONAL SEAL 19431 THOMAS M. NORRIS JR. 11-14-13

SPAULDING & NORRIS, PA
Design Consultants
972 Trinity Road 27607
Raleigh, North Carolina
Phone (919) 854-7990 Fax (919) 854-7925

PREPARED FOR : SNR, LLP 972 TRINITY ROAD RALEIGH, NC 27607
DATE : 1-18-12
S&N FIRM CERTIFICATION # C-1875
PROJECT ENGINEER: STEPHANE L. NORRIS, P.E.
PROJECT CADD DESIGNER: BRIAN M. BRION
PROJECT SURVEYOR:

LOCKWOOD VILLAGE APTS

CITY OF WILMINGTON, NEW HANOVER COUNTY, NORTH CAROLINA

PRELIMINARY PLANS
UTILITY & DRAINAGE PLAN

DRAWING / SHEET
C-2.0

PROJECT NUMBER
732-11

F:\701 - 750 Projects\732-11 Simpson Property (SNW)\Sketch Plan\732-11 C0200.dwg Nov 14, 2013 - 8:14am BY:BrionD

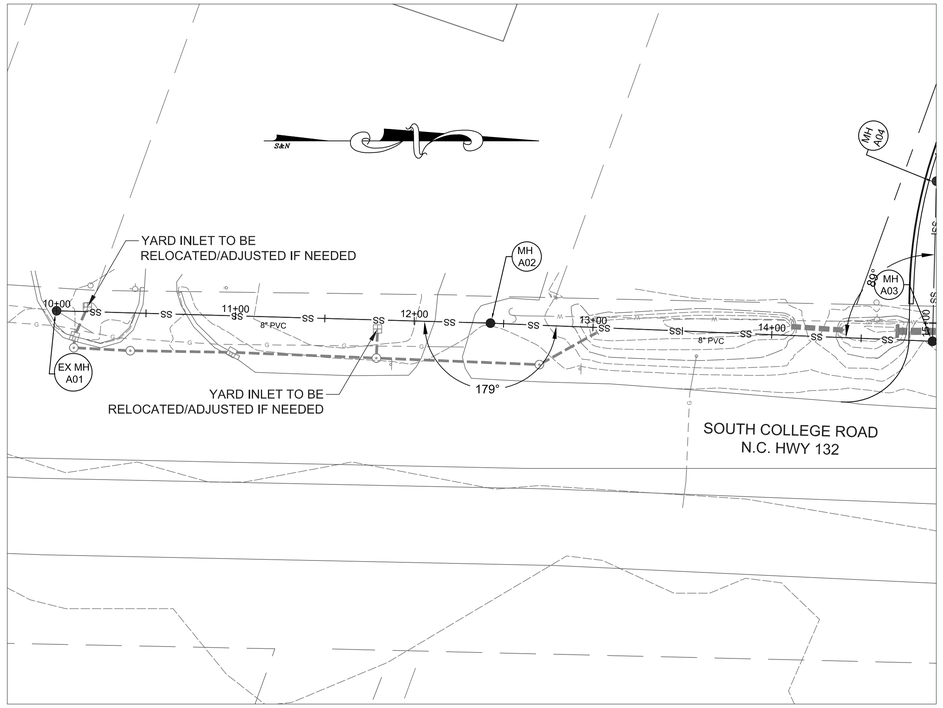

SEWER (OUTFALL) - PLAN VIEW

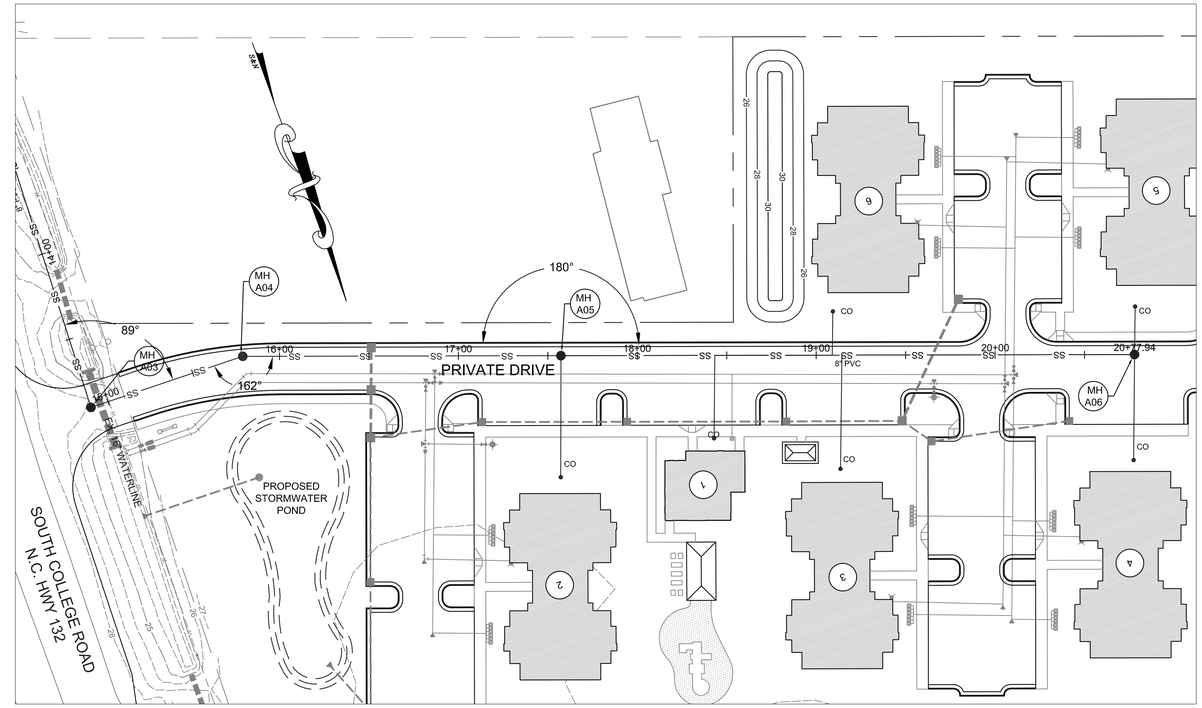

SEWER (ROADWAY) - PLAN VIEW

GRAPHIC SCALE

40 0 20 40 80 160

(IN FEET)
1 inch = 40 ft.

THIS DRAWING IS THE PROPERTY OF:
Spaulding & Norris, PA
and is not to be reproduced or copied in whole or in part without permission from Spaulding & Norris, PA. This drawing is not to be used on any other project and is to be returned to Spaulding & Norris, PA, upon request.

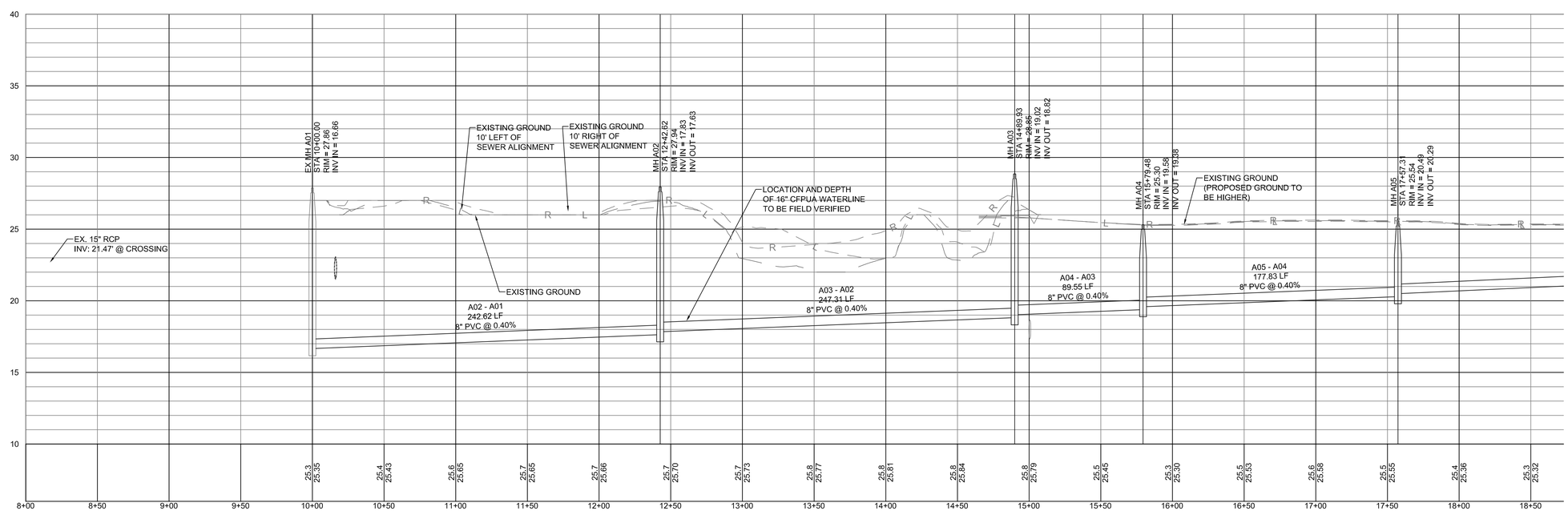

SEWER (OUTFALL & ROADWAY) - PROFILE VIEW

NO.	REVISION	DATE
1.	PER CFPUA COMMENTS	2/27/2012
2.	PER CFPUA COMMENTS	3/13/2012
3.	PER REVISED BLDG. FOOTPRINT	1/18/2013
4.	PER CFPUA COMMENTS	8/13/2013

SEAL: NORTH CAROLINA PROFESSIONAL SEAL 19431 THOMAS J. SPAULDING, JR. 9-13-13

S&N SPAULDING & NORRIS, PA
Design Consultants
972 Trinity Road
Raleigh, North Carolina 27607
Phone (919) 854-7990 Fax (919) 854-7925

PREPARED FOR :
SNR, LLP
972 TRINITY ROAD
RALEIGH, NC 27607

DATE : 1-18-12

S&N FIRM CERTIFICATION #: C-1875

PROJECT ENGINEER:
STEPHANIE L. NORRIS, P.E.

PROJECT CADD DESIGNER:
BRIAN A. DOWNS

PROJECT SURVEYOR:

LOCKWOOD VILLAGE APTS

CITY OF WILMINGTON, NEW HANOVER COUNTY, NORTH CAROLINA

PRELIMINARY UTILITY PLANS
SANITARY SEWER PLAN / PROFILE

DRAWING / SHEET
C-2.1

PROJECT NUMBER
732-11

F:\701 - 750 Projects\732-11 Simpson Property (SNR)\Sketch Plan\732-11 C0201.dwg Sep 13, 2013 - 10:58am BY:BrianD

Line	ToLine	LineLength	Incr.Area	TotalArea	RunoffCoeff.	IncrC x A	TotalC x A	InletTime	TimeConc	RnfallInt	TotalRunoff	AdnlFlow	TotalFlow	CapacFull	Veloc	PipeSize	PipeSlope	Inv ElevDn	Inv ElevUp	HGLDn	HGLUp	Grnd/RimDn	Grnd/RimUp	Line ID
		(ft)	(ac)	(ac)	(C)			(min)	(min)	(in/hr)	(cfs)	(cfs)	(cfs)	(cfs)	(ft/s)	(in)	(%)	(ft)	(ft)	(ft)	(ft)	(ft)	(ft)	
1	Outfall	25	0.27	2.6	0.89	0.24	1.89	5	8.1	6.6	12.51	0	12.51	19.19	6.22	24	0.72	23	23.18	24.18	24.45	26	28.5	CB 2 - FES 1
2	1	129	0.4	2.33	0.71	0.28	1.65	5	7.5	6.7	11.1	0	11.1	17.13	4.99	24	0.57	23.28	24.02	24.81	25.21	28.5	28.5	CB 3 - CB 2
3	2	97.5	0.3	1.93	0.71	0.21	1.37	5	7	6.8	9.32	0	9.32	15.87	3.48	24	0.49	24.12	24.6	25.94	26.04	28.5	29.3	CB 4 - CB 3
4	3	81.92	0.52	1.07	0.7	0.36	0.71	5	6.1	7	4.97	0	4.97	16	3.05	24	0.5	24.7	25.11	26.39	25.89	29.3	29.9	CB 5 - CB 4
5	4	78	0.23	0.55	0.67	0.15	0.35	5	5.5	7.1	2.47	0	2.47	9.7	3.28	15	2.26	25.21	26.97	26.13	27.6	29.9	30	CB 6 - CB 5
6	3	118	0.56	0.56	0.79	0.44	0.44	5	5	7.2	3.2	0	3.2	7.18	3.52	15	1.24	25.21	26.67	26.38	27.39	29.3	30	CB 7 - CB 4
7	5	52	0.32	0.32	0.6	0.19	0.19	5	5	7.2	1.39	0	1.39	3.6	2.77	12	1.02	26.97	27.5	27.8	28	30	30	CB 6 - CB 8
1	Outfall	34.41	0.15	0.3	0.95	0.14	0.29	5	5.3	7.2	2.04	0	2.04	4.78	2.6	12	1.8	23.5	24.12	25	25.11	25	28.1	CB 10 - FES 9
2	1	23.79	0.15	0.15	0.95	0.14	0.14	5	5	7.2	1.03	0	1.03	4.62	2.86	12	1.68	24.7	25.1	25.22	25.53	28.1	28.1	CB 11 - CB 10

GENERAL NOTES

1.) BOUNDARY AND TOPOGRAPHIC DATA TAKEN FROM DIGITAL FILE FROM ATLANTIC COAST SURVEY, PLLC DATED 09/05/13 TREE SURVEY PROVIDED BY ATLANTIC COAST SURVEY, PLLC DATED 01/13/12.

2.) THIS SITE DOES NOT CONTAIN 100 OR 500 YEAR FLOODPLAIN PER FIRM MAP NO. 3720313400J PANEL 3134, EFFECTIVE DATE APRIL 3, 2006, TAKEN FROM NCFLOODMAPS.COM

3.) THE SITE DOES NOT CONTAIN WETLANDS OR JURISDICTIONAL FEATURES PER SITE INVESTIGATION BY LAND MANAGEMENT GROUP IN AUGUST 2011 AND CONFERENCE BY USACE AND NCDWQ IN SEPTEMBER 2011.

4.) THE CONTRACTOR SHALL CONTACT " NORTH CAROLINA ONE CALL" AT 800-632-4949 FOR ASSISTANCE IN LOCATING EXISTING UTILITIES. CALL AT LEAST 48 HOURS PRIOR TO ANY DIGGING.

5.) EXISTING CONDITIONS AND UTILITIES SHOWN ARE BASED ON INFORMATION PROVIDED BY NEW HANOVER COUNTY GIS. THE CONTRACTOR SHALL FIELD VERIFY CONDITIONS PRIOR TO STARTING CONSTRUCTION AND NOTIFY THE ENGINEER OF ANY DESCREPANCIES, CONFLICTS INVOLVING PUBLIC WATER, SANITARY SEWER, AND STORM DRAINAGE CONSTRUCTION SHALL BE RESOLVED TO THE SATISFACTION OF THE CITY OF WILMINGTON.

6.) THE CONTRACTOR IS RESPONSIBLE FOR INVESTIGATING SOIL CONDITIONS ON SITE. THE CONTRACTOR SHALL NOTIFY THE ENGINEER IMMEDIATELY OF ANY UNSUITABLE MATERIAL UPON FIRST CONTACT.

PROPOSED SEWER FLOW:

60 UNITS @ 240 GPD/UNIT = 14,400 GPD
OFFICE BUILDING @ 100 GPD = 100 GPD

TOTAL PROPOSED FLOW: = 14,500 GPD

PROPOSED WATER FLOW:

60 UNITS @ 400 GPD/UNIT = 24,000 GPD
OFFICE BUILDING @ 150 GPD = 150 GPD

TOTAL PROPOSED FLOW: = 24,150 GPD

UTILITY NOTES

1. EXISTING WELL LOCATION UNKNOWN. CONTRACTOR TO LOCATE AND CAP PER PUBLIC WATER SUPPLY STANDARDS.
2. EXISTING SEPTIC FIELD LOCATION UNKNOWN. CONTRACTOR TO LOCATE AND REMOVE.
3. WATER AND SANITARY SEWER PROVIDED BY CAPE FEAR PUBLIC UTILITY AUTHORITY.
4. CONTRACTOR SHALL VERIFY LOCATION OF ALL EXISTING UTILITIES, AND SHALL BE RESPONSIBLE FOR ANY DAMAGE RESULTING FROM HIS ACTIVITIES. CALL UTILITY LOCATOR SERVICE 48 HOURS PRIOR TO ANY CONSTRUCTION.
5. ALL CONSTRUCTION & MATERIALS SHALL BE IN ACCORDANCE WITH THE CITY OF WILMINGTON STANDARDS AND SPECIFICATIONS.
6. ALL WATER AND SEWER LINES SHALL BE INSTALLED IN STRICT ACCORDANCE WITH THE LATEST EDITION OF THE NC PLUMBING CODE.
7. SANITARY SEWER SHALL BE PRIVATE UPSTREAM OF MH A03.
8. FIRE HYDRANTS CANNOT BE FURTHUR THAN 8' FROM THE CURB.
9. PARKING AND LANDSCAPING CANNOT BLOCK FIRE HYDRANTS OR FDC'S.
10. FDC'S CAN BE NO FURTHUR THAN 40' FROM FIRE DEPARTMENT VEHICLE PLACEMENT.
11. FDC'S CAN BE NO FURTHUR THAN 150' FROM A FIRE HYDRANT.
12. ALL WEATHER ACCESS ROAD MUST BE MAINTAINED AROUND CONSTRUCTION SITE AT ALL TIMES.
13. NEW HYDRANTS MUST BE BROUGHT INTO SERVICE PRIOR TO COMBUSTIBLE MATERIALS BEING DELIVERED TO THE JOB SITE.
14. TYPE OF CONSTRUCTION IS: WOOD FRAME BUILDING WITH VINYL AND BRICK VENEER.
15. HYDRANTS SHALL BE SUFFICIENT NUMBERS TO ACCOMMODATE BASE FIRE FLOW REQUIREMENTS OF STRUCTURE.
16. IN ADDITION T THE STANDARD COMMENTS, ADDITIONAL FIRE PROTECTION AND ACCESSIBILITY REQUIREMENTS MAY BE REQUIRED DUE TO ANY SPECIAL CIRCUMSTANCES CONCERNING THE PROJECT.
17. PRIVATE UNDERGROUND FIRE LINES REQUIRE A SEPARATE UNDERGROUND FIRE LINE PERMIT FORMT HE WILMINGTON FIRE AND SAFETY DIVISION 910-343-0696.

NOTE:

1. NO WETLANDS DISTURBED.

GRAPHIC SCALE

40 0 20 40 80 160

(IN FEET)
1 inch = 40 ft.

INSET 2
SCALE= 1"=40'

THIS DRAWING IS THE PROPERTY OF:
Spaulding & Norris, PA
and is not to be reproduced or copied in whole or in part without permission from Spaulding & Norris, PA. This drawing is not to be used on any other project and is to be returned to Spaulding & Norris, PA, upon request.

NO.	REVISION	DATE
1.	PER CFPUA COMMENTS	2/27/2012
2.	PER CFPUA COMMENTS	3/13/2012
3.	PER REVISED BLDG. FOOTPRINT	1/18/2013
4.	PER TRC COV COMMENTS	8/14/2013
5.	PER TRC COV COMMENTS	11/14/2013

SEAL: NORTH CAROLINA PROFESSIONAL SEAL 19431 ENGINEERING THOMAS E. NORRIS 11-14-13

SPAULDING & NORRIS, PA
Design Consultants
972 Trinity Road
Raleigh, North Carolina 27607
Phone (919) 854-7990 Fax (919) 854-7925

PREPARED FOR :
SNR, LLP
972 TRINITY ROAD
RALEIGH, NC 27607
DATE : 1-18-12
S&N FIRM CERTIFICATION #: C-1875
PROJECT ENGINEER:
STEPHANE L. NORRIS, P.E.
PROJECT CADD DESIGNER:
BRIAN M. SANDIFER
PROJECT SURVEYOR:

LOCKWOOD VILLAGE APTS

CITY OF WILMINGTON, NEW HANOVER COUNTY, NORTH CAROLINA

CONSTRUCTION PLANS
GRADING & DRAINAGE PLAN

DRAWING
SHEET
C-3.0

PROJECT NUMBER
732-11

F:\701 - 750 Projects\732-11 Simpson Property (SNW)\Sketch Plan\732-11 C0300.dwg Nov 14, 2013 - 7:29pm BY:BrianD

SKIMMER BASIN DATA TABLE

BASIN	DRAINAGE AREA (acres)	Q(10) (cfs)	REQUIRED SURFACE AREA (sf)	REQUIRED VOLUME (cf)	BASIN DIMENSIONS (WATER STORAGE) (L x W x Depth)	SURFACE AREA PROVIDED (sf)	VOLUME PROVIDED (cf)	WEIR LENGTH (ft)	TRAP TYPE	SKIMMER SIZE	SKIMMER ORIFICE SIZE
#1	3.92	9.91	32.19	7,056	81' x 40' x 3'	3,240	7,650	12	1	2.0"	1.7"

TRAP TYPE 1 = CUSTOM SKIMMER BASIN

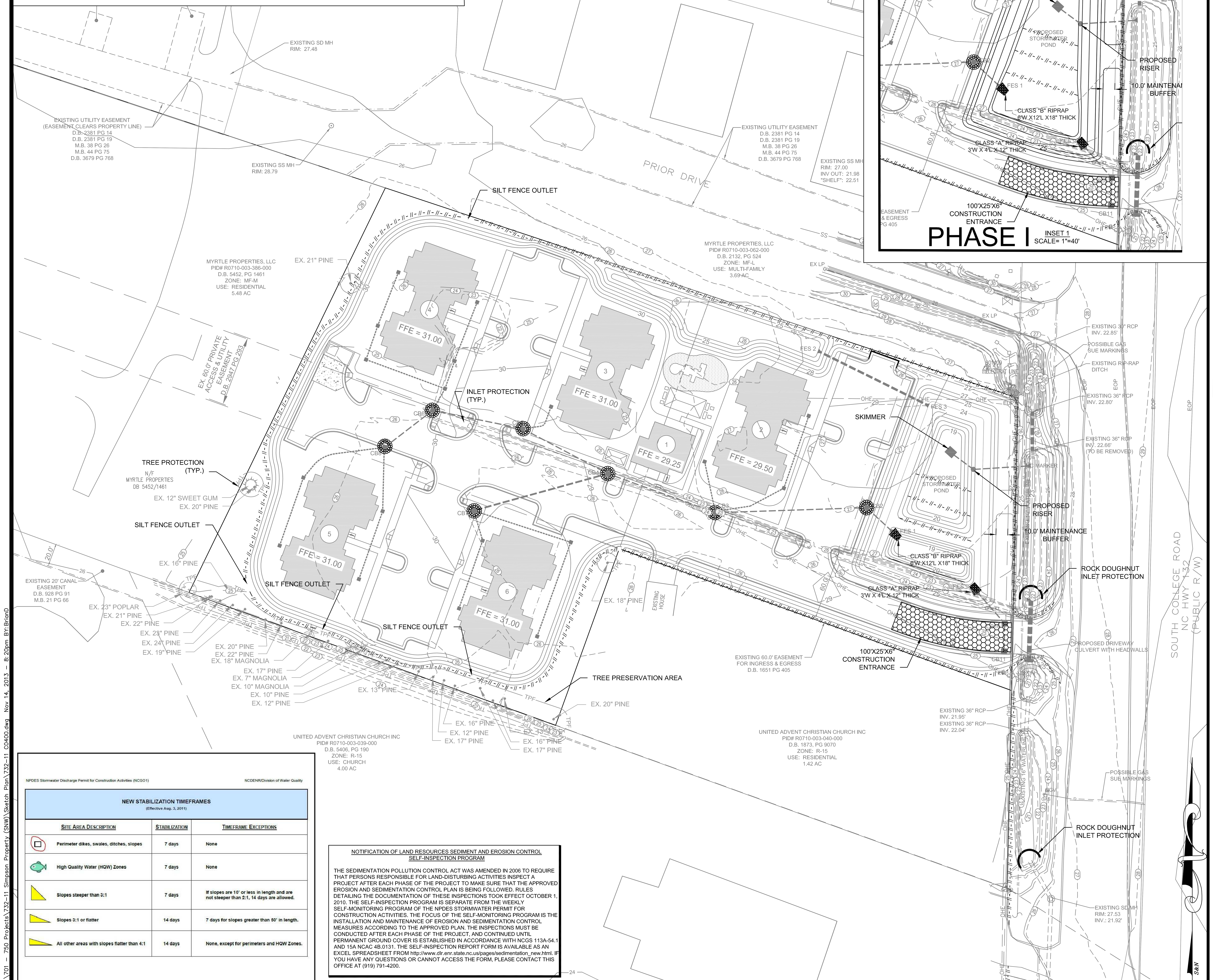

NPDES Stormwater Discharge Permit for Construction Activities (NCGO1) — NCDENR/Division of Water Quality

NEW STABILIZATION TIMEFRAMES
(Effective Aug. 3, 2011)

SITE AREA DESCRIPTION	STABILIZATION	TIMEFRAME EXCEPTIONS
Perimeter dikes, swales, ditches, slopes	7 days	None
High Quality Water (HQW) Zones	7 days	None
Slopes steeper than 3:1	7 days	If slopes are 10' or less in length and are not steeper than 2:1, 14 days are allowed.
Slopes 3:1 or flatter	14 days	7 days for slopes greater than 50' in length.
All other areas with slopes flatter than 4:1	14 days	None, except for perimeters and HQW Zones.

NOTIFICATION OF LAND RESOURCES SEDIMENT AND EROSION CONTROL SELF-INSPECTION PROGRAM

THE SEDIMENTATION POLLUTION CONTROL ACT WAS AMENDED IN 2006 TO REQUIRE THAT PERSONS RESPONSIBLE FOR LAND-DISTURBING ACTIVITIES INSPECT A PROJECT AFTER EACH PHASE OF THE PROJECT TO MAKE SURE THAT THE APPROVED EROSION AND SEDIMENTATION CONTROL PLAN IS BEING FOLLOWED. RULES DETAILING THE DOCUMENTATION OF THESE INSPECTIONS TOOK EFFECT OCTOBER 1, 2010. THE SELF-INSPECTION PROGRAM IS SEPARATE FROM THE WEEKLY SELF-MONITORING PROGRAM OF THE NPDES STORMWATER PERMIT FOR CONSTRUCTION ACTIVITIES. THE FOCUS OF THE SELF-MONITORING PROGRAM IS THE INSTALLATION AND MAINTENANCE OF EROSION AND SEDIMENTATION CONTROL MEASURES ACCORDING TO THE APPROVED PLAN. THE INSPECTIONS MUST BE CONDUCTED AFTER EACH PHASE OF THE PROJECT, AND CONTINUED UNTIL PERMANENT GROUND COVER IS ESTABLISHED IN ACCORDANCE WITH NCGS 113A-54.1 AND 15A NCAC 4B.0131. THE SELF-INSPECTION REPORT FORM IS AVAILABLE AS AN EXCEL SPREADSHEET FROM http://www.dlr.enr.state.nc.us/pages/sedimentation_new.html. IF YOU HAVE ANY QUESTIONS OR CANNOT ACCESS THE FORM, PLEASE CONTACT THIS OFFICE AT (919) 791-4200.

GENERAL NOTES

1.) BOUNDARY AND TOPOGRAPHIC DATA TAKEN FROM DIGITAL FILE FROM ATLANTIC COAST SURVEY, PLLC DATED 09/05/13 TREE SURVEY PROVIDED BY ATLANTIC COAST SURVEY, PLLC DATED 01/13/12.

2.) THIS SITE DOES NOT CONTAIN 100 OR 500 YEAR FLOODPLAIN PER FIRM MAP NO. 3720313400J PANEL 3134, EFFECTIVE DATE APRIL 3, 2006, TAKEN FROM NCFLOODMAPS.COM

3.) THE SITE DOES NOT CONTAIN WETLANDS OR JURISDICTIONAL FEATURES PER SITE INVESTIGATION BY LAND MANAGEMENT GROUP IN AUGUST 2011 AND CONFERENCE BY USACE AND NCDWQ IN SEPTEMBER 2011.

4.) THE CONTRACTOR SHALL CONTACT " NORTH CAROLINA ONE CALL" AT 800-632-4949 FOR ASSISTANCE IN LOCATING EXISTING UTILITIES. CALL AT LEAST 48 HOURS PRIOR TO ANY DIGGING.

5.) EXISTING CONDITIONS AND UTILITIES SHOWN ARE BASED ON INFORMATION PROVIDED BY NEW HANOVER COUNTY GIS. THE CONTRACTOR SHALL FIELD VERIFY CONDITIONS PRIOR TO STARTING CONSTRUCTION AND NOTIFY THE ENGINEER OF ANY DESCREPANCIES. CONFLICTS INVOLVING PUBLIC WATER, SANITARY SEWER, AND STORM DRAINAGE CONSTRUCTION SHALL BE RESOLVED TO THE SATISFACTION OF THE CITY OF WILMINGTON.

6.) THE CONTRACTOR IS RESPONSIBLE FOR INVESTIGATING SOIL CONDITIONS ON SITE. THE CONTRACTOR SHALL NOTIFY THE ENGINEER IMMEDIATELY OF ANY UNSUITABLE MATERIAL UPON FIRST CONTACT.

PROPOSED SEWER FLOW:

60 UNITS @ 240 GPD/UNIT = 14,400 GPD
OFFICE BUILDING @ 100 GPD = 100 GPD

TOTAL PROPOSED FLOW: = 14,500 GPD

PROPOSED WATER FLOW:

60 UNITS @ 400 GPD/UNIT = 24,000 GPD
OFFICE BUILDING @ 150 GPD = 150 GPD

TOTAL PROPOSED FLOW: = 24,150 GPD

UTILITY NOTES

1. EXISTING WELL LOCATION UNKNOWN. CONTRACTOR TO LOCATE AND CAP PER PUBLIC WATER SUPPLY STANDARDS.
2. EXISTING SEPTIC FIELD LOCATION UNKNOWN. CONTRACTOR TO LOCATE AND REMOVE.
3. WATER AND SANITARY SEWER PROVIDED BY CAPE FEAR PUBLIC UTILITY AUTHORITY.
4. CONTRACTOR SHALL VERIFY LOCATION OF ALL EXISTING UTILITIES, AND SHALL BE RESPONSIBLE FOR ANY DAMAGE RESULTING FROM HIS ACTIVITIES. CALL UTILITY LOCATOR SERVICE 48 HOURS PRIOR TO ANY CONSTRUCTION.
5. ALL CONSTRUCTION & MATERIALS SHALL BE IN ACCORDANCE WITH THE CITY OF WILMINGTON STANDARDS AND SPECIFICATIONS.
6. ALL WATER AND SEWER LINES SHALL BE INSTALLED IN STRICT ACCORDANCE WITH THE LATEST EDITION OF THE NC PLUMBING CODE.
7. SANITARY SEWER SHALL BE PRIVATE UPSTREAM OF MH A03.
8. FIRE HYDRANTS CANNOT BE FURTHUR THAN 8' FROM THE CURB.
9. PARKING AND LANDSCAPING CANNOT BLOCK FIRE HYDRANTS OR FDC'S.
10. FDC'S CAN BE NO FURTHUR THAN 40' FROM FIRE DEPARTMENT VEHICLE PLACEMENT.
11. FDC'S CAN BE NO FURTHUR THAN 150' FROM A FIRE HYDRANT.
12. ALL WEATHER ACCESS ROAD MUST BE MAINTAINED AROUND CONSTRUCTION SITE AT ALL TIMES.
13. NEW HYDRANTS MUST BE BROUGHT INTO SERVICE PRIOR TO COMBUSTIBLE MATERIALS BEING DELIVERED TO THE JOB SITE.
14. TYPE OF CONSTRUCTION IS: WOOD FRAME BUILDING WITH VINYL AND BRICK VENEER.
15. HYDRANTS SHALL BE SUFFICIENT NUMBERS TO ACCOMMODATE BASE FIRE FLOW REQUIREMENTS OF STRUCTURE.
16. IN ADDITION T THE STANDARD COMMENTS, ADDITIONAL FIRE PROTECTION AND ACCESSIBILITY REQUIREMENTS MAY BE REQUIRED DUE TO ANY SPECIAL CIRCUMSTANCES CONCERNING THE PROJECT.
17. PRIVATE UNDERGROUND FIRE LINES REQUIRE A SEPARATE UNDERGROUND FIRE LINE PERMIT FORMT HE WILMINGTON FIRE AND SAFETY DIVISION 910-343-0696.

CONSTRUCTION SEQUENCE

1. SCHEDULE A PRECONSTRUCTION MEETING
2. OBTAIN GRADING PERMIT AND KEEP A COPY ONSITE
3. CONTRACTOR SHALL IDENTIFY WHERE WETLANDS ARE AND REVIEW ENVIRONMENTAL PERMITS TO UNDERSTAND THE LIMITS OF DISTURBANCE.
4. CLEAR ONLY ENOUGH TO INSTALL CONSTRUCTION ENTRANCE, SILT FENCE, SKIMMER BASINS, DIVERSION DITCHES, AND WASH OUT AREA
5. CALL FOR INSPECTION OF INSTALLED DEVICES
6. BEGIN ROUGH GRADING
7. INSTALL WATER, SEWER AND STORM DRAINAGE PER APPROVED PLAN. ALL STORM SEWER INLETS SHALL HAVE INLET PROTECTION AS SOON AS THE INLETS ARE CONSTRUCTED.
8. ALL DISTURBED AREAS SHALL NOT BE LEFT INACTIVE WITHOUT TEMPORARY SEEDING FOR MORE THAN 7 DAYS.
9. CONTINUE FINE GRADING OF SITE AND INSTALL CURB AND GUTTER
10. STABILIZE ALL AREAS AS THEY ARE BROUGHT UP TO FINAL GRADE
11. IF IT IS DETERMINED DURING CONSTRUCTION THAT SIGNIFICANT SEDIMENT IS LEAVING THE SITE, DESPITE PROPER IMPLEMENTATION AND MAINTENANCE, THE CONTRACTOR IS OBLIGATED TO TAKE ADDITIONAL CORRECTIVE ACTION.
12. INSPECT AND MAINTAIN EROSION CONTROL DEVICES SO THEY CONTINUE TO FUNCTION PROPERLY. SILT FENCE SHALL BE INSPECTED AFTER EACH RAINFALL AND REPAIRED IF NECESSARY
13. WHEN CONSTRUCTION IS FINISHED, VEGETATION HAS BECOME ESTABLISHED AND SITE HAS BEEN STABILIZED, CALL FOR A FINAL SITE INSPECTION BY THE CITY OF WILSON AND OBTAIN A CERTIFICATE OF COMPLETION
14. UPON RECEIVING APPROVAL, REMOVE ALL TEMPORARY DEVICES.

EROSION CONTROL LEGEND

Symbol	Meaning
— // – // – // —	SILT FENCE
▬ ▪ ▪ ▬	LIMITS OF DISTURBANCE
———	TREE PROTECTION FENCE
(ring of circles)	INLET PROTECTION
(hatched rectangle)	CONSTRUCTION ENTRANCE

GRAPHIC SCALE
40 0 20 40 80 160
(IN FEET)
1 inch = 40 ft.

THIS DRAWING IS THE PROPERTY OF:
Spaulding & Norris, PA
and is not to be reproduced or copied in whole or in part without permission from Spaulding & Norris, PA. This drawing is not to be used on any other project and is to be returned to Spaulding & Norris, PA, upon request.

NO.	REVISION	DATE
1.	PER CFPUA COMMENTS	2/27/2012
2.	PER CFPUA COMMENTS	3/13/2012
3.	PER REVISED BLDG. FOOTPRINT	1/18/2013
4.	PER CFPUA COMMENTS	9/13/2013
5.	PER TRC CofW COMMENTS	11/14/2013

SEAL: NORTH CAROLINA PROFESSIONAL ENGINEER SEAL 19375 THOMAS ... 11-14-13

S&N SPAULDING & NORRIS, PA
Design Consultants
972 Trinity Road
Raleigh, North Carolina 27607
Phone (919) 854-7990 Fax (919) 854-7925

PREPARED FOR : SNW, LLP 972 TRINITY ROAD RALEIGH, NC 27607
DATE : 1-18-12
S&N FIRM CERTIFICATION #: C-1875
PROJECT ENGINEER: STEPHANIE L. NORRIS, P.E.
PROJECT CADD DESIGNER: BRIAN W. DOWNS
PROJECT SURVEYOR:

LOCKWOOD VILLAGE APTS
CITY OF WILMINGTON, NEW HANOVER COUNTY, NORTH CAROLINA

CONSTRUCTION PLANS
EROSION CONTROL PLAN

DRAWING SHEET C-4.0

PROJECT NUMBER 732-11

F:\701 - 750 Projects\732-11 Simpson Property (SNW)\Sketch Plan\732-11 C0400.dwg Nov 14, 2013 - 8:20pm BY:BrianD

GENERAL NOTES

1.) BOUNDARY AND A PORTION OF TOPOGRAPHIC DATA TAKEN FROM DIGITAL FILE FROM ATLANTIC COAST SURVEY, PLLC DATED 01/13/12. TREE SURVEY PROVIDED BY ATLANTIC COAST SURVEY, PLLC DATED 01/13/12. A PORTION OF TOPOGRAPHIC DATA IS TAKEN FROM NEW HANOVER COUNTY GIS ON 9/01/1.

2.) THIS SITE DOES NOT CONTAIN 100 OR 500 YEAR FLOODPLAIN PER FIRM MAP NO. 3720313400J PANEL 3134. EFFECTIVE DATE APRIL 3, 2006. TAKEN FROM NCFLOODMAPS.COM

3.) THE SITE DOES NOT CONTAIN WETLANDS OR JURISDICTIONAL FEATURES PER SITE INVESTIGATION BY LAND MANAGEMENT GROUP IN AUGUST 2011 AND CONFERENCE BY USACE AND NCDWQ IN SEPTEMBER 2011.

4.) THE CONTRACTOR SHALL CONTACT " NORTH CAROLINA ONE CALL" AT 800-632-4949 FOR ASSISTANCE IN LOCATING EXISTING UTILITIES. CALL AT LEAST 48 HOURS PRIOR TO ANY DIGGING.

5.) EXISTING CONDITIONS AND UTILITIES SHOWN ARE BASED ON INFORMATION PROVIDED BY NEW HANOVER COUNTY GIS. THE CONTRACTOR SHALL FIELD VERIFY CONDITIONS PRIOR TO STARTING CONSTRUCTION AND NOTIFY THE ENGINEER OF ANY DESCREPANCIES. CONFLICTS INVOLVING PUBLIC WATER, SANITARY SEWER, AND STORM DRAINAGE CONSTRUCTION SHALL BE RESOLVED TO THE SATISFACTION OF THE CITY OF WILMINGTON.

6.) THE CONTRACTOR IS RESPONSIBLE FOR INVESTIGATING SOIL CONDITIONS ON SITE. THE CONTRACTOR SHALL NOTIFY THE ENGINEER IMMEDIATELY OF ANY UNSUITABLE MATERIAL UPON FIRST CONTACT.

LANDSCAPE NOTES

1. ALL LANDSCAPING SHALL BE INSTALLED ACCORDING TO SOUND NURSERY PRACTICES AND SHALL MEET ALL STANDARDS AS STATED IN THE LATEST EDITION OF "AMERICAN STANDARD FOR NURSERY STOCK," AMERICAN NURSERY & LANDSCAPE ASSOCIATION. ALL SPECIFICATIONS, GENERAL CONDITIONS, GENERAL AND CONSTRUCTION NOTES APPLY.
2. LOCATE ALL UTILITIES PRIOR TO DIGGING. CONTRACTOR SHALL BE RESPONSIBLE FOR ALL DAMAGES INCURRED BYHIS WORK.
3. PLANT LIST QUANTITIES ARE PROVIDED FOR CONVENIENCE ONLY. IN THE EVENT OF QUANTITY DISCREPANCIES, THE DRAWINGS SHALL TAKE PRECEDENCE. NOTIFY LANDSCAPE ARCHITECT OF ANY DISCREPANCIES.
4. NO SUBSTITUTIONS SHALL BE MADE WITHOUT WRITTEN AUTHORIZATION FROM THE OWNER OR LANDSCAPE DESIGNER.
5. ALL ROPE AND TWINE SHALL BE REMOVED FROM THE TOP OF THE ROOT BALL. BASKET WIRES AND BURLAP SHALL BE REMOVED FROM THE TOP HALF OF THE ROOT BALL ON TREES AND LARGE SHRUBS. SYNTHETIC BURLAP SHALL BE REMOVED FROM ROOT BALLS PRIOR TO BACKFILLING.
6. TREE STAKING SHALL BE PERFORMED WITHIN TWO (2) DAYS OF PLANTING.
7. ALL PLANT MATERIALS SHALL BE INSTALLED WITH THE TOPS OF THE BALLS ABOVE EXISTING GRADE, AS INDICATED IN THE DETAILS. ALL BEDS AND TREE SAUCERS SHALL BE RAISED, GRADED TO PROVIDE ADEQUATE DRAINAGE AND MULCHED WITH 3" TO 4" OF PINESTRAW, UNLESS OTHERWISE SPECIFIED.
8. PRIOR TO ANY CLEARING, GRADING, OR CONSTRUCTION ACTIVITY, TREE PROTECTION FENCING WILL BE INSTALLED AROUND PROTECTED TREES OR GROVES OF TREES. NO CONSTRUCTION WORKERS, TOOLS, MATERIALS OR VEHICLES ARE PERMITTED WITHIN THE TREE PROTECTION FENCING.

Landscape Requirements

Street Yard - South College Road

Required - 271 LF - 35' (drives) = 236 LF
236 x 12 = 2,832 SF
Trees 1 Tree per 600 SF = 5 Trees Required

Shrubs 6 Shrubs per 600 SF = 30 Shrubs Required

Buffer Yards - (Combination with Fencing Option)

North PL - 567 LF - ZONE MF TO MF - NO BUFFER REQUIRED

South PL - 357 LF - 40' (Streetyard) = 337 LF
Trees 1 Tree per 30LF = 12 Trees Required

Shrubs 6' Solid Opaque Screen
Double Row - 36" Ht. @ Time of Planting

South PL - 331 LF - 40' (Rear Buffer) = 311 LF
Trees 1 Tree per 30LF = 11 Trees Required

Shrubs 6' Solid Opaque Screen
Double Row - 36" Ht. @ Time of Planting

East PL - 160 LF
Trees 1 Tree per 30LF = 6 Trees Required

Shrubs 6' Solid Opaque Screen
Double Row - 36" Ht. @ Time of Planting

West PL - 383 LF - ZONE MF TO MF - NO BUFFER REQUIRED

Parking Lot - (20% Shading Required)

Trees: 7,434 SF/2,000 = 4 Trees Req'd

Shrubs: 7,434 SF/500 . = 15 Shrubs Req'd

Foundation - (12% of Building Face SF)

Apartment Building = 3,240 SF x 12% = 389 SF Planted Area Required per Unit

Community Building = 450 SF x 12% = 54 SF Planted Area Required

Stormwater - Groupings every 100 LF

PLANT LIST

Note: Quantities are for confirmation of Contractor's count only, and are not guarantee
B&B=Balled and Burlapped, CON=Container stock, BR=Bare Root

Key	Botanical Name	Common Name	Qt.	Ht.	Minumum Spr.	Cal.	Root
AC	Abelia chinensis	Chinese Abelia	19	24"	24"	-	Cont.
AR	Acer rubrum "Red Sunset"	Red Sunset Maple	9	8'-10'	4'	2"	B&B
BM	Berberis x mentorensis	Mentor Barberry	30	24"	24"	-	Cont.
CC	Cercis canadensis 'Forest Pansy'	Forest Pansy Redbud	5	8'	4'	2"	B&B
ICC	Ilex cornuta 'Carissa'	Carissa Holly	27	24"	24"	-	Cont.
ICH	Ilex crenata 'Helleri'	Helleri Holly	70	18"	24"	-	Cont.
ID	Ilex decidua	Possumhaw	30	24"	24"	-	Cont.
IG	Ilex glabra 'Compacta'	Compact Inkberry Holly	8	18"	18"	-	Cont.
LO	Lavandula officinalis	Lavender	30	12"	-	-	Cont.
MC	Myrica cerifera	Wax Myrtle	34	36"	24"	-	Cont.
QF	Quercus falcata	Southern Red Oak	24	8'-10'	4'	2"	B&B
UP	Ulmus parvofolia 'Drake'	Drake Elm	9	8'-10'	4'	2"	B&B
VL	Viburnum lantana 'Mohican'	Mohican Viburnum	4	24"	24"	-	Cont.

THIS DRAWING IS THE PROPERTY OF:
Spaulding & Norris, PA
and is not to be reproduced or copied in whole or in part without permission from Spaulding & Norris, PA. This drawing is not to be used on any other project and is to be returned to Spaulding & Norris, PA, upon request.

GRAPHIC SCALE

(IN FEET)
1 inch = 40 ft.

FOR REVIEW ONLY-
NOT FOR CONSTRUCTION

PLAN IS SUBJECT TO REVISIONS DURING THE CONSTRUCTION APPROVAL PROCESS

NO.	REVISION	DATE
1.	PER CFPUA COMMENTS	2/27/2012
2.	PER CFPUA COMMENTS	3/13/2012
3.	PER REVISED BLDG. FOOTPRINT	1/18/2013
4.	PER TRC COMMENTS	8/14/2013
5.	PER TRC CWP COMMENTS	11/14/2013

SEAL: NORTH CAROLINA PROFESSIONAL SEAL 19531 LANDSCAPE ARCHITECTURE THOMAS M. NORRIS 11-14-13

S&N SPAULDING & NORRIS, PA
Design Consultants
972 Trinity Road
Raleigh, North Carolina 27607
Phone (919) 854-7990 Fax (919) 854-7925

PREPARED FOR :
SNR, LLP
972 TRINITY ROAD
RALEIGH, NC 27607
DATE : 1-18-12
S&N FIRM CERTIFICATION # C-1875
PROJECT ENGINEER:
STEPHANIE L. NORRIS, P.E.
PROJECT CADD DESIGNER:
ROBERT M. ROSS
PROJECT SURVEYOR:

LOCKWOOD VILLAGE APTS

CITY OF WILMINGTON, NEW HANOVER COUNTY, NORTH CAROLINA

CONSTRUCTION DRAWINGS
LANDSCAPE PLAN

DRAWING
SHEET
L-1.0

PROJECT NUMBER
732-11

F:\701 - 750 Projects\732-11 Simpson Property (SNW)\Sketch Plan\732-11 L0100.dwg Nov 14, 2013 - 7:55pm BY:BrianD

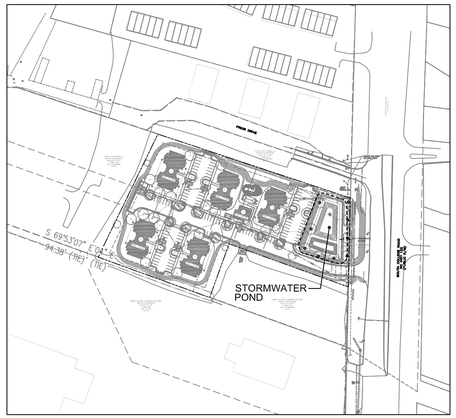

KEY MAP SCALE: 1"=200'

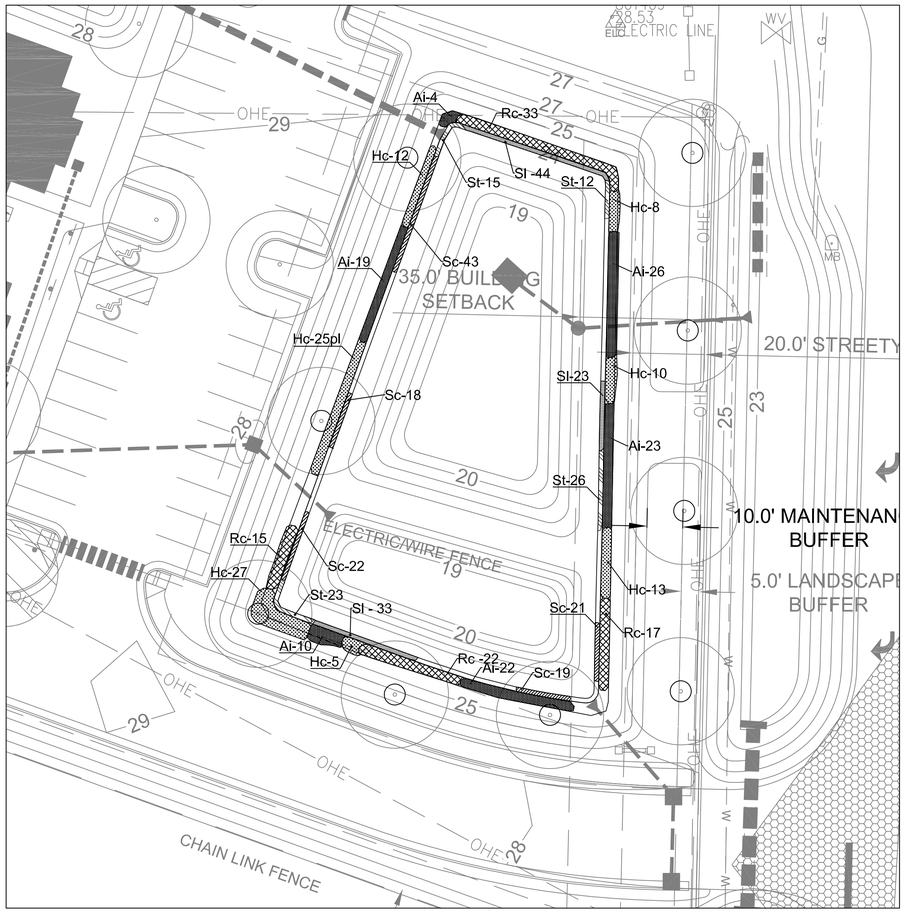

STORMWATER POND PLANTING PLAN SCALE: 1"=20'

PLANT LIST

KEY	SCIENTIFIC NAME	COMMON NAME	QUAN.	CAL.	HT.	SPD.	ROOT	REMARKS
	WETLAND EMERGENT HERBACEOUS SPECIES (LOW MARSH)							
Sc	Saururus cernuus	Lizards Tail	123	4" Pot			Cont.	
Sl	Sagittaria latifolia	Duck Potato	100	4" Pot			Cont.	
St	Schoenoplectus tabernaemontani	Soft Stem Bulrush	76	4" Pot			Cont.	
	WETLAND SHALLOW LAND SPECIES (HIGH MARSH)							
Ai	Asclepius incarnata	Swamp Milkweed	104	4" pot			Cont.	
Hc	Hibiscus coccineus	Scarlet Rose Mallow	100	4" pot			Cont.	
Rc	Rhynchospora colorata	Stamush Whitetop	87	4" pot			Cont.	

PLANT SOURCES: ALL PLANT MATERIAL SHALL COME FROM LOCAL NURSERY STOCK. IF A SOURCE FOR A SPECIFIED PLANT CAN NOT BE LOCATED, LANDSCAPE CONTRACTOR SHALL CONTACT THE LANDSCAPE ARCHITECT FOR A SUITABLE SUBSTITUTION.

ALL CONSTRUCTION MUST CONFORM TO THE UNDERGROUND UTILITY PROTECTION ACT

BEFORE YOU DIG!
CONTACT ONE-CALL CENTER
1-800-632-4949

ENGINEERED FILTER STRIP PLANTING REQUIREMENTS

* GROUND COVER REQUIRED: COMMON BERMUDA

*75 LBS OF GROUND LIMESTONE PER 1,000 SQ FT.

*A STARTER TYPE FERTILIZER (ONE THAT IS HIGH IN PHOSPHORUS) BASED ON THE TYPE OF GRASS AND THE PLANTING METHOD. FERTILIZER BAGS HAVE A THREE-NUMBER SYSTEM INDICATING THE PRIMARY NUTRIENTS, SUCH AS 8-8-8 OR 5-10-10. THESE NUMBERS DENOTE THE N-P-K RATIO—THE PERCENTAGE OF EACH NUTRIENT IN A FERTILIZER. THE PERCENTAGES ARE NOTED IN THE FOLLOWING ORDER: N NITROGEN FOR GREEN COLOR AND GROWTH. P2O5 PHOSPHORUS FOR GOOD ROOTING. K2O POTASSIUM TO ENHANCE PEST AND ENVIRONMENTAL STRESS TOLERANCE. COMMON EXAMPLES OF STARTER FERTILIZERS REQUIRED FOR A 1,000 SQ FT AREA INCLUDE 40 LBS OF -10-10, 20 LBS OF 10-20-20, OR 16 LBS OF 18-24-6. FOR SANDY SOILS, TYPICAL TO THE COASTAL PLAIN AND SANDHILLS, FERTILIZER RATES SHOULD BE INCREASED BY 20 PERCENT.

NOTES:

1. THE TOP OF THE BERM AND THE EXTERIOR SIDE SLOPES SHALL BE SEEDED WTIH CENTIPEDE GRASS.
2. THE VEGETATIVE FILTER STRIP SHALL BE SEEDED WITH CENTIPEDE GRASS.
3. NO TREES OR SHRUBS SHALL BE PLACED WITHIN 10 FEET OF INLET OR OUTLET PIPES, OR MAINMADE DRAINAGE STRUCTURES SUCH AS SPILLWAYS OR FLOW SPREADERS.
4. PLANTINGS SHALL NOT BE PLACED ON BERMS
5. LANDSCAPE CONTRACTOR IS RESPONSIBLE FOR VERIFYING ALL PLANT QUANTITIES AND SHALL BRING ANY DESCREPANCIES TO THE ATTENTION OF THE LANDSCAPE ARCHITECT.
6. SEED SHALL BE APPLIED AT THE RATE SPECIFIED BY THE MANUFACTURER. IF PLANT ESTABLISHMENT CANNOT BE ACHEIVED WITH SEEDING BY THE TIME OF SUBSTANTIAL COMPLETION OF THE STORMWATER FACILTY PORTION OF THE PROJECT, THEN THE CONTRACTOR SHALL PLANT THE AREA WITH WILDFLOWER SOD, PLUGS, CONTAINER PLANTS OR OTHER MEANS TO COMPLETE THE SPECIFIED PLANTINGS AND PROTECT AGAINST EROSION BEFORE WATER IS ALLOWED TO ENTER THE STORMWATER BMP FACILITY.
7. ALL NEWLY PLANTED PLANT MATERIAL SHALL BE PROTECTED FROM INVASIVE WEEDS AND ANIMAL DAMAGE (STAKING, NETTING, ETC.) TO ENSURE PLANT SURVIVAL.
8. ALL STAKING SHALL BE REMOVED WITHIN 12 MONTHS TO PREVENT GIRDLING.
9. ALL PLANTS SHALL HAVE A 2-YEAR WARRENTY. AT THE END OF THE 1ST YEAR AND AGAIN AT THE END OF THE 2-YEAR WARRENTY PERIOD, ALL PLANTS THAT DO NOT SURVIVE SHALL BE REPLACED.
10. ANY SOIL AMENDMENTS SHOULD BE ADDED AT THE END OF THE SITE CONSTRUCTION PROCESS. THE BMP SHALL BE PLANTED AND MULCHED IMMEDIATELY AFTER AMENDING THE SOIL TO STABILZE THE SITE AS SOON AS POSSIBLE.
11. SHALLOW WATER PLANTS ARE BEST PLANTED BETWEEN APRIL 1 AND JULY 15. AVOID WINTER PLANTINGS.

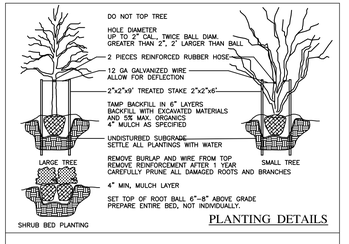

PLANTING DETAILS

GENERAL PLANTING NOTES

1. VERIFICATION OF TOTAL QUANTITIES AS SHOWN ON THE PLANT LIST SHALL BE THE RESPONSIBILITY OF THE PLANTING CONTRACTOR, AND THE TOTAL QUANTITIES SHALL BE REQUIRED ON THE PLANTING PLAN.
2. ALL TREES, SHRUBS, AND BEDDING PLANTS SHALL CONFORM TO THE ACCEPTED STANDARDS ESTABLISHED BY THE AMERICAN ASSOCIATION OF NURSERYMEN.
3. ALL SAUCERS SHALL BE SOAKED WITH WATER AND MULCHED IMMEDIATELY FOLLOWING PLANTING.
4. SET TOP OF ROOT BALL 6"-8" ABOVE GRADE, PREPARE ENTIRE BED, NOT INDIVIDUALLY.
5. THE SIZE OF ALL ROOT BALLS SHALL CONFORM TO ANN STANDARDS.
6. FERTILIZE ALL PLANTS WITH AGRIFORM FERTILIZER TABLETS OR EQUAL TO BE APPLIED AT MANUFACTURERS RECOMENDED RATE.
7. GUYING, IF NECESSARY, SHALL BE REMOVED AFTER ONE GROWING SEASON.
8. ALL ROOT BALLS REMOVED FROM CONTAINERS SHALL BE SCARIFIED PRIOR TO BACKFILLING.
9. ALL TREES HAVE BEEN LOCATED WITH RESPECT TO PROPOSED OR EXISTING FACILITIES AND UTILITIES.
10. OWNERS SHALL MAINTAIN ALL PLANT BEDS AND PLANT MATERIAL IN GOOD HEALTH, AND ANY DEAD, UNHEALTHY OR MISSING PLANTS SHALL BE REPLACED WITH LOCALLY ADAPTED VEGETATION WHICH CONFORMS TO THE INITIAL PLANTING STANDARDS OF THE LANDSCAPE ORDINANCE.
11. REPORT ANY DISCREPANCIES TO THE PROJECT LANDSCAPE ARCHITECT.
12. SUBSTITUTIONS OR ALTERATIONS SHALL NOT BE MADE WITHOUT PRIOR WRITTEN NOTIFICATION OF THE PROJECT LANDSCAPE ARCHITECT.
13. ALL PLANT MATERIAL SHALL BE OF SPECIMEN QUALITY.

THIS DRAWING IS THE PROPERTY OF:
Spaulding & Norris, PA
and is not to be reproduced or copied in whole or in part without permission from Spaulding & Norris, PA. This drawing is not to be used on any other project and is to be returned to Spaulding & Norris, PA, upon request.

FOR REVIEW ONLY-
NOT FOR CONSTRUCTION

PLAN IS SUBJECT TO REVISIONS DURING THE CONSTRUCTION APPROVAL PROCESS

NO.	REVISION	DATE
1.	PER CFPUA COMMENTS	2/20/2012
2.	PER CFPUA COMMENTS	3/13/2012
3.	PER REVISED BLDG. FOOTPRINT	11/8/2013
4.	PER CFPUA COMMENTS	9/12/2013
5.	PER TRC COMMENTS	11/14/2013

SEAL: NORTH CAROLINA PROFESSIONAL SEAL 019 ENGINEER BRIAN W. DOWNS THOMAS 11-14-13

S&N SPAULDING & NORRIS, PA
Design Consultants
972 Trinity Road
Raleigh, North Carolina 27607
Phone (919) 854-7990 Fax (919) 854-7925

PREPARED FOR :
SNK, LLP
972 TRINITY ROAD
RALEIGH, NC 27607
DATE : 1-18-12
S&N FIRM CERTIFICATION # C-1875
PROJECT ENGINEER:
PRINCIPAL: BRIAN W. DOWNS, P.E.
PROJECT ARCHITECT/DESIGNER:
BRIAN W. DOWNS
PROJECT SURVEYOR:

LOCKWOOD VILLAGE APTS
CITY OF WILMINGTON, NEW HANOVER COUNTY, NORTH CAROLINA

CONSTRUCTION DRAWINGS
STORMWATER POND PLANTING PLAN

DRAWING SHEET
L-1.1

PROJECT NUMBER
732-11

F:\701 - 750 Projects\732-11 Simpson Property (SNW)\Sketch Plan\732-11 L01D1.dwg Nov 14, 2013 - 5:23pm BY:User1

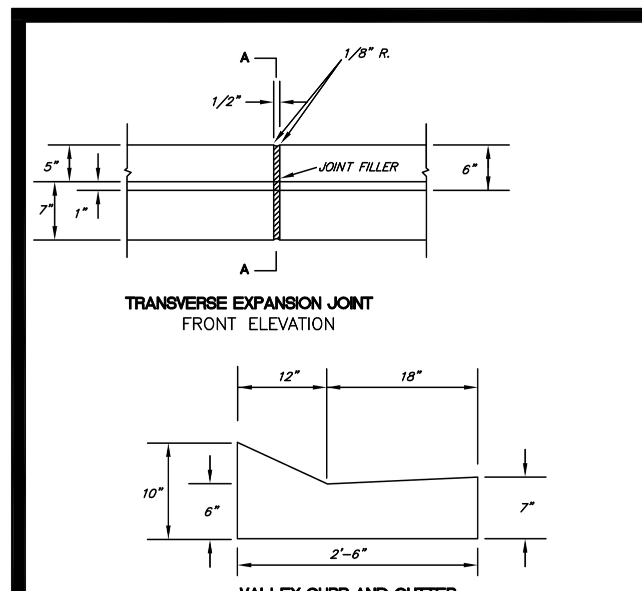

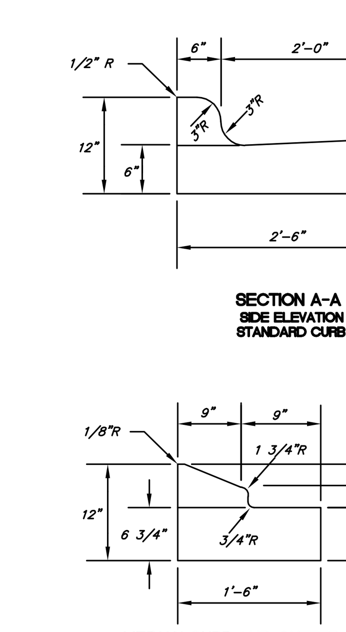

NOTES:

1. CONCRETE SHALL BE 3,000 P.S.I.
2. CONTRACTION JOINTS SHALL BE SPACED AT 10' INTERVALS. (15' SPACING WILL BE ALLOWED WHEN A MACHINE IS USED)
3. REMOVAL OF ANY PORTION OF CURB AND GUTTER SHALL REQUIRE FULL REMOVAL AND REPLACEMENT SO THAT NO LONGITUDINAL SEAMS ARE CREATED.
4. MAINTAIN 50' MAX. BETWEEN JOINTS OR AT ALL RIGID OBJECTS.

DRAWING NOT TO SCALE

STANDARD CONCRETE CURB AND GUTTER

STANDARD DETAIL NUMBER: HS321	
DATE	REVISIONS
2/8/10	

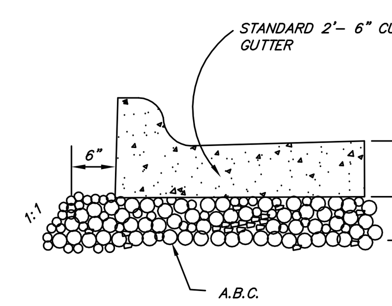

NOTES:

1. STONE IS REQUIRED UNDER ALL TYPES OF CURB AND GUTTER ON STREETS
2. STONE IS NOT REQUIRED ON PARKING LOTS

DRAWING NOT TO SCALE

A.B.C. UNDER CURB AND GUTTER

STANDARD DETAIL NUMBER: HS322	
DATE	REVISIONS
2/8/10	

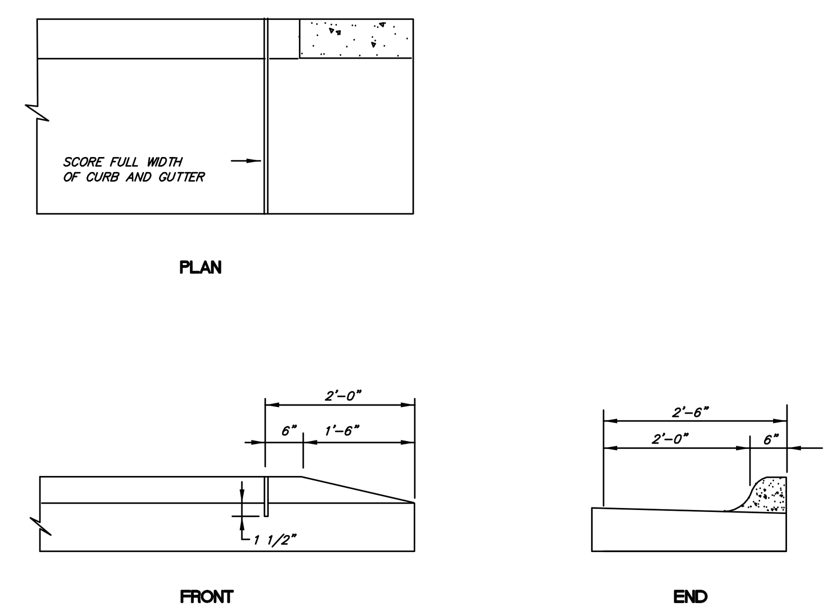

DRAWING NOT TO SCALE

STANDARD METHOD OF ENDING CURB AND GUTTER

STANDARD DETAIL NUMBER: HS323	
DATE	REVISIONS
2/8/10	

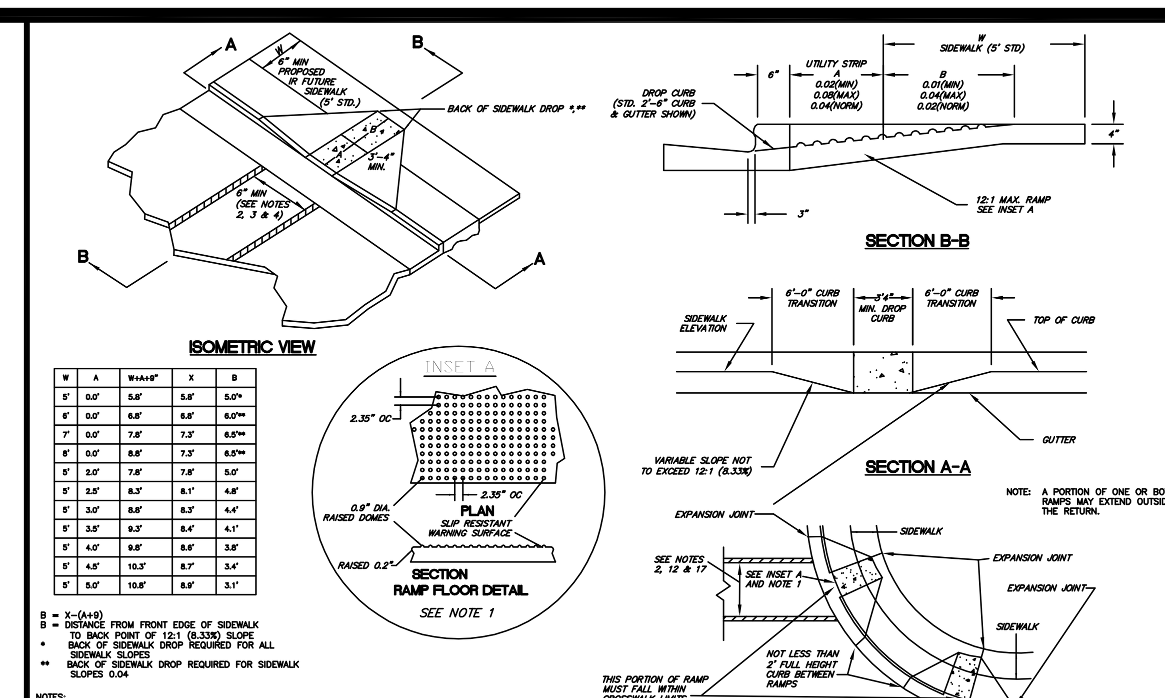

B = X-(A+9)
B = DISTANCE FROM FRONT EDGE OF SIDEWALK TO BACK POINT OF 12:1 (8.33%) SLOPE
* BACK OF SIDEWALK DROP REQUIRED FOR ALL SIDEWALK SLOPES
** BACK OF SIDEWALK DROP REQUIRED FOR SIDEWALK SLOPES 0.04

NOTES:
1. THE WALKING SURFACE SHALL BE SLOPE RESISTANT. DETECTABLE WARNING DOMES SHALL COVER THE FULL WIDTH AND DEPTH OF THE RAMP FLOOR. THE DETECTABLE WARNING SHALL CONSIST OF RAISED TRUNCATED DOMES WITH A DIAMETER OF NOMINAL 0.9". A HEIGHT OF 0.2" AND CENTER-TO-CENTER SPACING OF NOMINAL 2.35". THE RAMP SHALL BE BLACK IN COLOR.
2. CROSSWALK WIDTHS AND CONFIGURATION VARY: MUST CONFORM TO TRAFFIC DESIGN STANDARDS.
3. THE INSIDE PEDESTRIAN CROSSWALK LINES SHALL BE SET NO CLOSER IN THE INTERSECTION THAN WOULD BE ESTABLISHED BY BISECTING THE INTERSECTION RADII. (SEE NOTE 14)
4. ALL PAVEMENT MARKINGS SHALL BE IN ACCORDANCE WITH THE LATEST EDITION OF THE MANUAL OF UNIFORM TRAFFIC CONTROL DEVICES (MUTCD) PUBLISHED BY THE FEDERAL HIGHWAY ADMINISTRATION AND THE NORTH CAROLINA SUPPLEMENT TO THE MUTCD.

DRAWING NOT TO SCALE

STANDARD WHEELCHAIR RAMP

STANDARD DETAIL NUMBER: HS331	
DATE	REVISIONS
2/8/10	

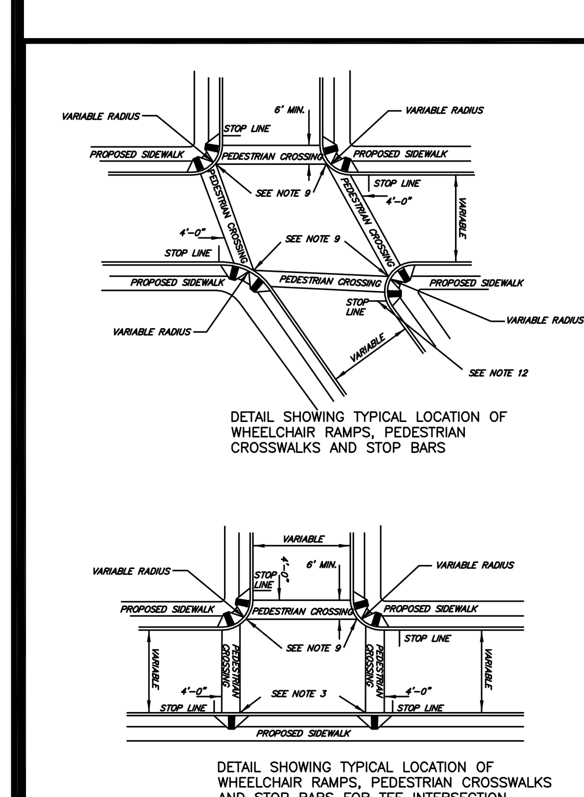

NOTES:

1. THE WALKING SURFACE SHALL BE SLOPE RESISTANT. DETECTABLE WARNING DOMES SHALL COVER THE FULL WIDTH AND DEPTH OF THE RAMP FLOOR. THE DETECTABLE WARNING SHALL CONSIST OF RAISED TRUNCATED DOMES WITH A DIAMETER OF NOMINAL 0.9". A HEIGHT OF 0.2" AND CENTER-TO-CENTER SPACING OF NOMINAL 2.35". THE RAMP SHALL BE BLACK IN COLOR.
2. CROSSWALK WIDTHS AND CONFIGURATION VARY: MUST CONFORM TO TRAFFIC DESIGN STANDARDS.
3. NORTH CAROLINA GENERAL STATUTE 136-44 44 REQUIRES THAT ALL STREET CURBS BEING CONSTRUCTED OR RECONSTRUCTED FOR MAINTENANCE PROCEDURES, TRAFFIC OPERATIONS REPAIRS, CORRECTION OF UTILITIES OR ALTERED FOR ANY REASON AFTER SEPTEMBER 1, 1973 SHALL PROVIDE WHEEL CHAIR RAMPS FOR THE PHYSICALLY HANDICAPPED AT ALL INTERSECTIONS WHERE BOTH CURB AND GUTTER AND SIDEWALKS ARE PROVIDED AND AT OTHER POINTS OF PEDESTRIAN FLOW.
IN ADDITION SECTION 228 OF THE 1973 FEDERAL AND HIGHWAY SAFETY ACT REQUIRES PROVISION OF CURB RAMPS ON ANY CURB CONSTRUCTION AFTER JULY 1, 1976 WHETHER A SIDEWALK IS PROPOSED INITIALLY OR IS PLANNED FOR FUTURE DATE
THE AMERICANS WITH DISABILITY ACT (ADA) OF 1990 EXTENDS TO INDIVIDUALS WITH DISABILITIES, COMPREHENSIVE CIVIL RIGHTS PROTECTIONS SIMILAR TO THOSE PROVIDED TO PERSONS ON THE BASIS OF RACE, SEX, NATIONAL ORIGIN AND RELIGION UNDER THE CIVIL RIGHTS ACT OF 1964. THESE CURB RAMPS HAVE BEEN DESIGNED TO COMPLY WITH TITLE 111 OF THE ADA, BECOMING EFFECTIVE ON JANUARY 26, 1992
4. WHEELCHAIR RAMPS SHALL BE PROVIDED AT LOCATIONS AS SHOWN ON THE PLANS OR AS DIRECTED BY THE ENGINEER. WHEELCHAIR RAMPS SHALL BE LOCATED AS INDICATED IN THESE DETAILS. HOWEVER, THE LOCATION MAY BE ADJUSTED BY THE ENGINEER WHERE EXISTING LIGHT POLES, FIRE HYDRANTS, DROP INLETS ETC. AFFECT PLACEMENT. AT ALL LOCATIONS, NOT LESS THAN 2 FEET OF FULL HEIGHT CURB SHALL BE PLACED BETWEEN THE RAMPS.
5. NO SLOPE ON THE WHEELCHAIR RAMP SHALL EXCEED 1"/1' (12:1) IN RELATIONSHIP TO THE GRADE OF THE STREET.
6. IN NO CASE SHALL THE WIDTH OF THE WHEELCHAIR RAMP BE LESS THAN 40" (3'-4"). HOWEVER, WIDTH MAY EXCEED 40".
7. USE CLASS "B" CONCRETE WITH A SIDEWALK FINISH IN ORDER TO OBTAIN A ROUGH NON-SKID TYPE SURFACE.
8. A 1/2" EXPANSION JOINT WILL BE REQUIRED WHERE THE CONCRETE WHEELCHAIR RAMP JOINS THE CURB.
9. THE INSIDE PEDESTRIAN CROSSWALK LINES SHALL BE SET NO CLOSER IN THE INTERSECTION THAN WOULD BE ESTABLISHED BY BISECTING THE INTERSECTION RADII. (SEE NOTE 14)
10. THE CURB CUT AND THE PEDESTRIAN CROSSWALK LINES SHALL BE COORDINATED SO THAT THE BEGINNING OF THE WHEELCHAIR RAMP WILL FALL WITHIN THE PEDESTRIAN CROSSWALK LINES.
11. THE MINIMUM WIDTH OF THE PEDESTRIAN CROSSWALK SHALL BE 6 FEET. A CROSSWALK WIDTH OF 10' OR GREATER IS DESIRABLE.
12. STOP LINES, NORMALLY PERPENDICULAR TO THE LANE LINES, SHALL BE USED WHERE IT IS IMPORTANT TO INDICATE THE POINT BEHIND WHICH VEHICLES ARE REQUIRED TO STOP IN COMPLIANCE WITH A TRAFFIC SIGNAL STOP SIGN OR OTHER LEGAL REQUIREMENT. AN UNUSUAL APPROACH SKEW MAY REQUIRE THE PLACEMENT OF THE STOP LINE TO BE PARALLEL TO THE INTERSECTING ROADWAY.
13. PARKING SHALL BE ELIMINATED A MINIMUM OF 20 FEET BACK OF PEDESTRIAN CROSSWALK.
14. ALL PAVEMENT MARKINGS SHALL BE IN ACCORDANCE WITH THE LATEST EDITION OF THE MANUAL OF UNIFORM TRAFFIC CONTROL DEVICES (MUTCD) PUBLISHED BY THE FEDERAL HIGHWAY ADMINISTRATION AND THE NORTH CAROLINA SUPPLEMENT TO THE MUTCD.

DRAWING NOT TO SCALE

STANDARD WHEELCHAIR RAMP

STANDARD DETAIL NUMBER: HS332	
DATE	REVISIONS
2/8/10	

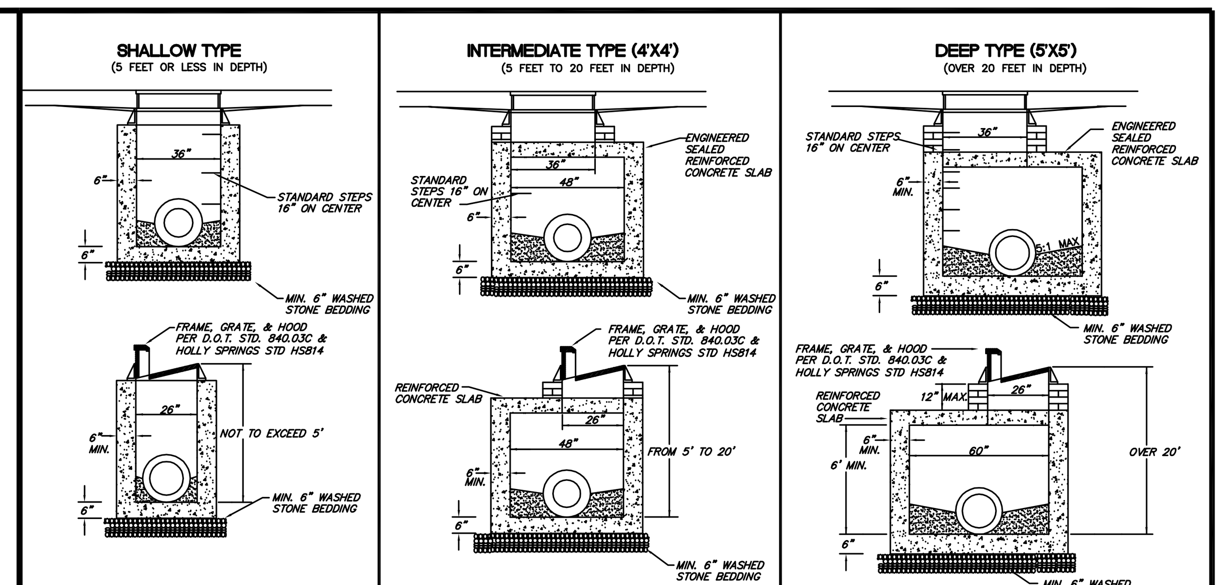

NOTES:

1. CONCRETE SHALL BE 4000 PSI MIN. FOR ALL PRECAST CONCRETE CATCH BASINS.
2. PRECAST CONCRETE STRUCTURES MAY ONLY BE INSTALLED TO DEPTHS CERTIFIED AS ACCEPTABLE BY THE MANUFACTURER.
3. NO WAFFLE BOXES ALLOWED.

DRAWING NOT TO SCALE

PRECAST CONCRETE CATCH BASINS

STANDARD DETAIL NUMBER: HS805	
DATE	REVISIONS
7/24/09	

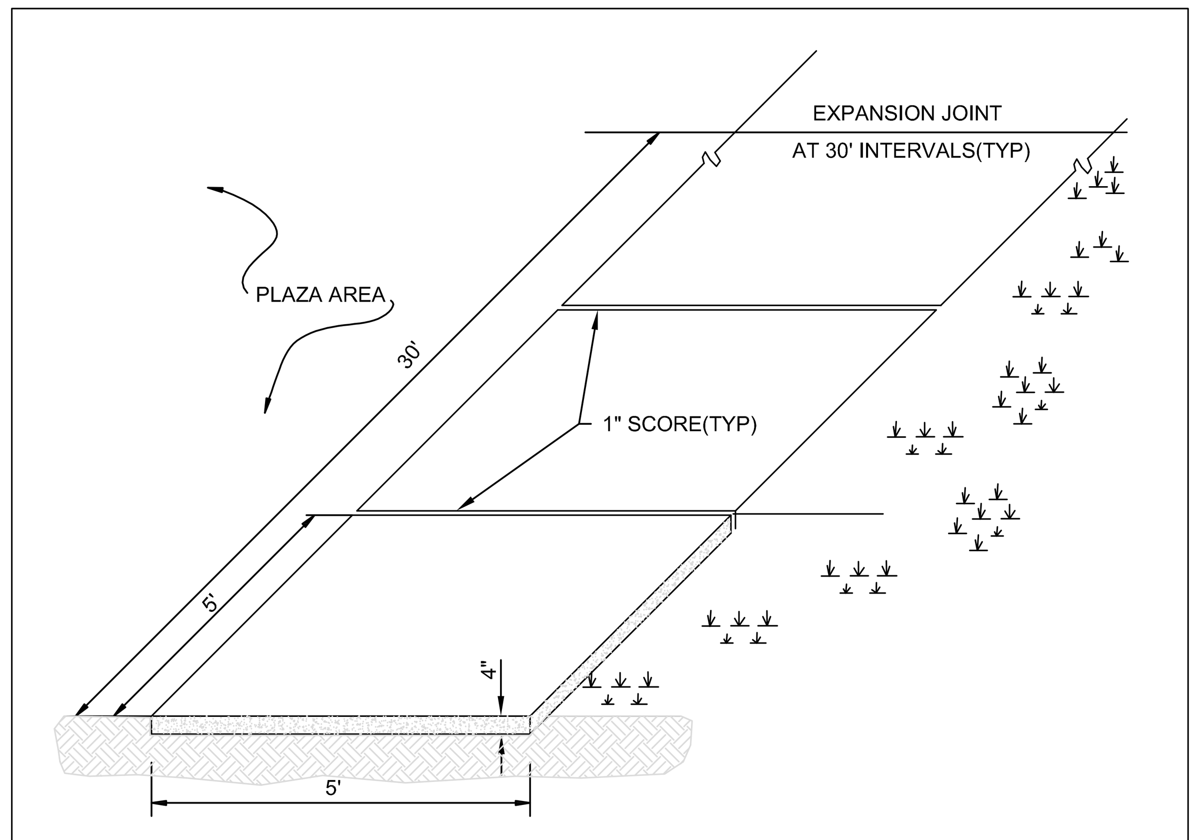

STANDARD SIDEWALK DETAIL
SD 8-15
NOT TO SCALE

SEEDBED PREPARATION:

1. CHISEL COMPACTED AREAS AND SPREAD TOPSOIL THREE INCHES DEEP OVER ADVERSE SOIL CONDITIONS, IF AVAILABLE. RIP THE ENTIRE AREA TO SIX INCHES DEEP.
2. REMOVE ALL LOOSE ROCK, ROOTS AND OTHER OBSTRUCTIONS, LEAVING SURFACE REASONABLY SMOOTH AND UNIFORM.
3. APPLY AGRICULTURAL LIME, FERTILIZER AND SUPERPHOSPHATE UNIFORMLY AND MIX WITH SOIL (SEE MIXTURE BELOW).
4. CONTINUE TILLAGE UNTIL A WELL-PULVERIZED, FIRM, REASONABLY UNIFORM SEEDBED IS PREPARED FOUR TO SIX INCHES DEEP.
5. SEED ON A FRESHLY PREPARED SEEDBED AND COVER SEED LIGHTLY WITH SEEDING EQUIPMENT OR CULTIPACK AFTER SEEDING. HYDRO-SEEDING, MULCHING AND CRIMPING IS NOT APPROVED.
6. MULCH IMMEDIATELY AFTER SEEDING USING CRIMPING TECHNIQUE.
7. INSPECT ALL SEEDED AREAS AND MAKE NECESSARY REPAIRS OR RESEEDINGS WITHIN THE PLANTING SEASON, IF POSSIBLE. IF STAND SHOULD BE MORE THAN 60% DAMAGED, RE-ESTABLISH FOLLOWING THE ORIGINAL LIME, FERTILIZER AND SEEDING RATES.

MIXTURE

AGRICULTURAL LIMESTONE	2 TONS/ACRE (3 TONS/ACRE IN CLAY SOILS)
FERTILIZER	1,000 LBS/ACRE - 10-10-10
SUPERPHOSPHATE	500 LBS/ACRE - 20% ANALYSIS
MULCH	2 TONS/ACRE - SMALL GRAIN STRAW
ANCHOR	ASPHALT EMULSION AT 300 GALS/ACRE

SEEDING SCHEDULE

FOR SHOULDERS, SIDE DITCHES,SLOPES (MAX 3:1):

DATE	TYPE	PLANTING RATE
AUG 15 - NOV 1	TALL FESCUE	300 LBS/ACRE
NOV 1 - MAR 1	TALL FESCUE & ABRUZZI RYE	300 LBS/ACRE
MAR 1 - APR 15	TALL FESCUE	300 LBS/ACRE
APR 15-JUN 30	HULLED COMMON BERMUDAGRASS	25 LBS/ACRE
JUL 1- AUG 15	TALL FESCUE AND BROWNTOP MILLET OR SORGHUM-SUDAN HYBRIDS***	125 LBS/ACRE (TALL FESCUE); 35 LBS/ACRE (BROWNTOP MILLET); 30 LBS/ACRE (SORGHUM-SUDAN HYBRIDS)

FOR SHOULDERS, SIDE DITCHES, SLOPES (3:1 TO 2:1)

DATE	TYPE	PLANTING RATE
MAR 1 - JUN 1	SERICEA LESPEDEZA (SCARIFIED) AND USE THE FOLLOWING COMBINATIONS:	50 LBS/ACRE (SERICEA LESPEDEZA);
MAR 1 - APR 15	ADD TALL FESCUE	120 LBS/ACRE
MAR 1 - JUN 30	OR ADD HULLED COMMON BERMUDAGRASS	25 LBS/ACRE
JUN 1 - SEPT 1	TALL FESCUE AND BROWNTOP MILLET OR SORGHUM-SUDAN HYBRIDS***	120 LBS/ACRE (TALL FESCUE); 35 LBS/ACRE (BROWNTOP MILLET); 30 LBS/ACRE (SORGHUM-SUDAN HYBRIDS)
SEPT 1 - MAR 1	SERICEA LESPEDEZA (UNHULLED - UNSCARIFIED) AND TALL FESCUE	70 LBS/ACRE (SERICEA LESPEDEZA); 120 LBS/ACRE (TALL FESCUE)
NOV 1 - MAR 1	AND ABRUZZI RYE	25 LBS/ACRE

THE ABOVE VEGETATION RATES ARE THOSE THAT DO WELL UNDER LOCAL CONDITIONS; OTHER SEEDING RATE COMBINATIONS ARE POSSIBLE.

*** TEMPORARY: RESEED ACCORDING TO OPTIMUM SEASON FOR DESIRED PERMANENT VEGETATION. DO NOT ALLOW TEMPORARY COVER TO GROW MORE THAN 12" IN HEIGHT BEFORE MOWING; OTHERWISE, FESCUE MAY BE SHADED OUT.

Details Provided by APPIAN Consulting Engineers www.appianengineers.com 06/07/2010 3:13:04 PM

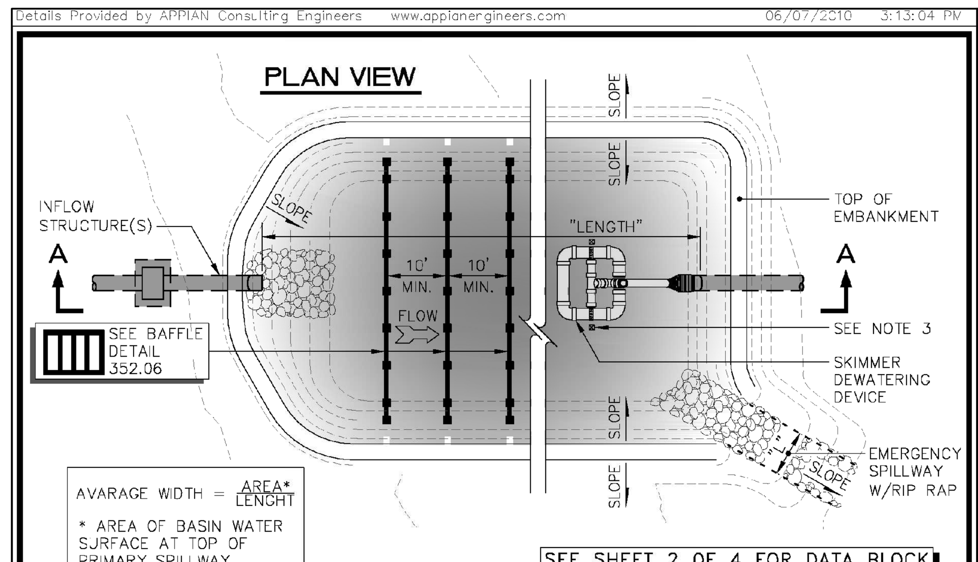

SKIMMER SEDIMENT BASIN DESIGN CRITERIA				
DRAINAGE AREA (ACRES)	MIN. LENGTH TO WIDTH RATIO	MAX. LENGTH TO WIDTH RATIO	MIN. VOLUME REQUIRED	SURFACE AREA REQUIRED
< 10 Ac.	2:1	6:1	1800 CU. FT. PER AC. DISTURBED	325 SQ. FT. PER CFS Q10

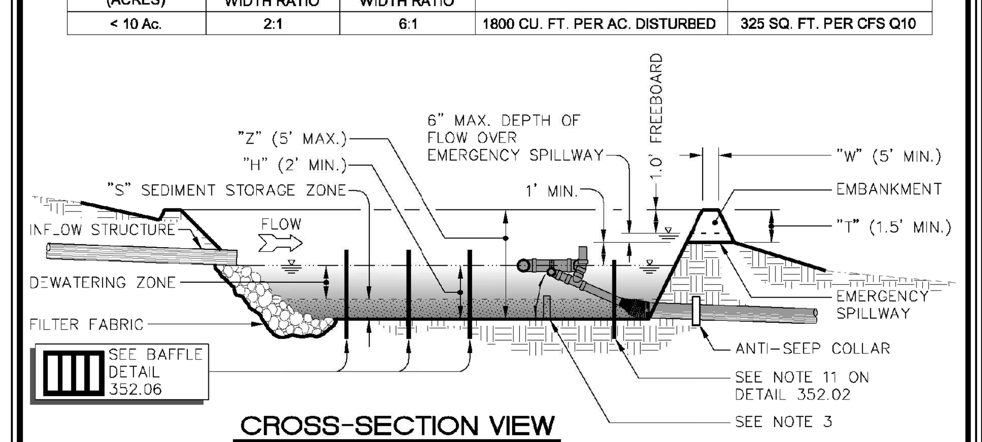

SEE SHEET 2 OF 4 FOR NOTES

SKIMMER SEDIMENT BASINS

Details Provided by APPIAN Consulting Engineers www.appianengineers.com 06/07/2010 3:12:52 PM

DATA BLOCK

Basin #	Drainage Area (Acres)	Denuded Area (Acres)	Q_{10}	325 SQ. FT. PER CFS Q10	Basin Volume Required (Cubic Ft.)	Basin Volume Provided (Cubic Ft.)	Basin Surface Area Required (Sq. Ft.)	Basin Surface Area Provided (Sq. Ft.)	"S" Cleanout Depth "H"/2 (Ft.)	"H" (Ft.)	"Z" (Ft.)	"L" (Ft.)	"T" (Ft.)	"W" (Ft.)	Skimmer Pipe Diameter	Skimmer Orifice Diameter

NOTES:
1. Refer to NCESCPDM section 6.64 for additional design specifications regarding skimmer sediment basins.
2. Refer to detail 352.04 for baffle spacing and installation.
3. Guide stakes should be installed to prevent skimmer from moving side to side. A device (concrete block or equivalent) to prevent the skimmer from settling below the top of sediment zone should be installed.

SKIMMER SEDIMENT BASINS

Details Provided by APPIAN Consulting Engineers — www.appianengineers.com 06/07/2010 — 3:13:35 PM

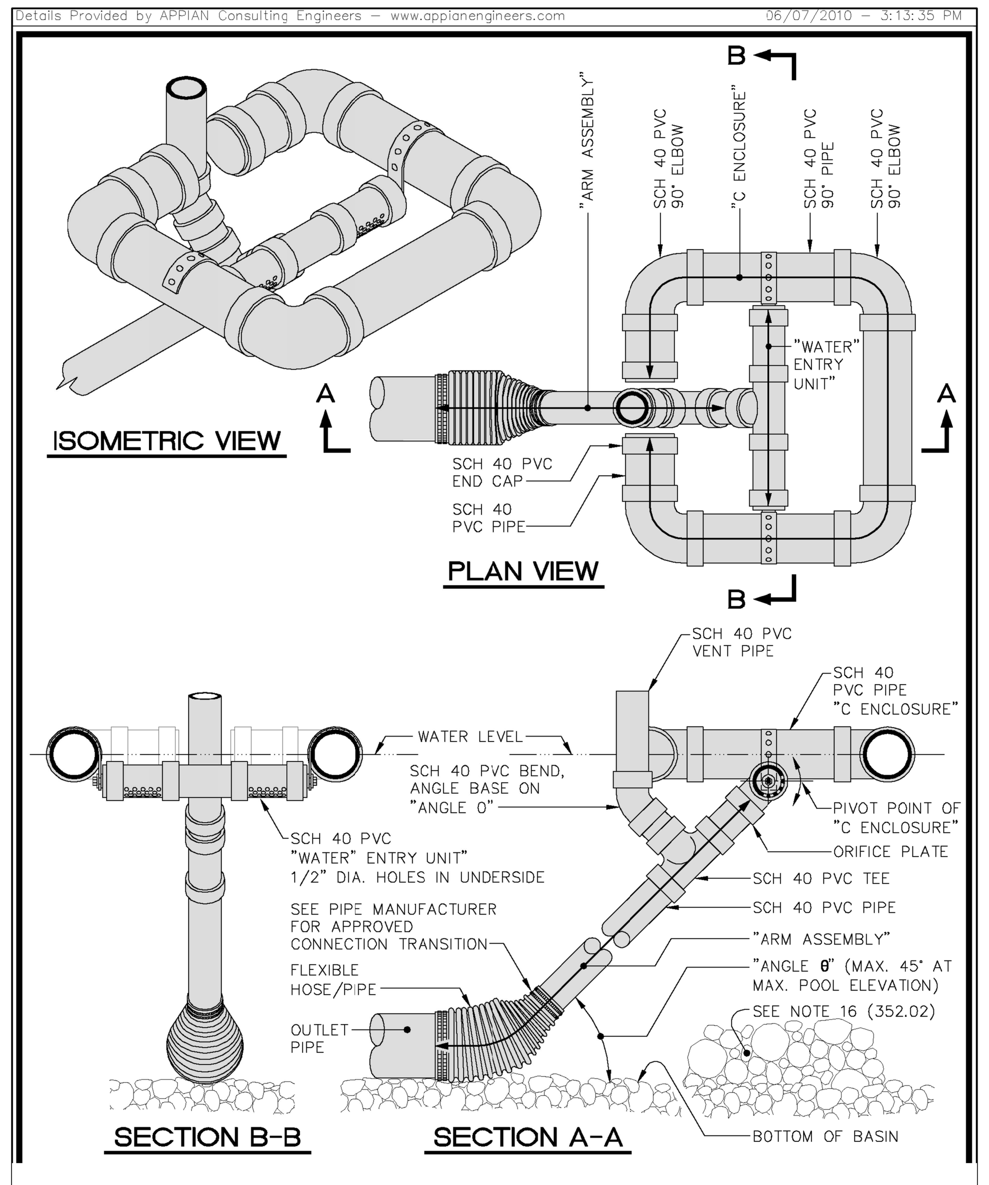

SKIMMER DETAIL

FOR REVIEW ONLY-
NOT FOR CONSTRUCTION

PLAN IS SUBJECT TO REVISIONS DURING THE CONSTRUCTION APPROVAL PROCESS

THIS DRAWING IS THE PROPERTY OF:
Spaulding & Norris, PA
and is not to be reproduced or copied in whole or in part without permission from Spaulding & Norris, PA. This drawing is not to be used on any other project and is to be returned to Spaulding & Norris, PA, upon request.

NO.	REVISION	DATE
1.	PER CFPUA COMMENTS	2/27/2012
2.	PER CFPUA COMMENTS	3/13/2012
3.	PER REVISED BLDG. FOOTPRINT	1/18/2013
4.	PER CFPUA COMMENTS	9/13/2013
5.	PER TRC CofW COMMENTS	11/14/2013

SEAL: 11-14-13

SPAULDING & NORRIS, PA
Design Consultants
972 Trinity Road
Raleigh, North Carolina 27607
Phone (919) 854-7990 Fax (919) 854-7925

PREPARED FOR :
SNW, LLP
972 TRINITY ROAD
RALEIGH, NC 27607

DATE : 1-18-12
S&N FIRM CERTIFICATION #: C-1875
PROJECT ENGINEER: STEPHANIE L. NORRIS, P.E.
PROJECT CADD DESIGNER: BRIAN W. DOWNS
PROJECT SURVEYOR:

LOCKWOOD VILLAGE APTS
CITY OF WILMINGTON, NEW HANOVER COUNTY, NORTH CAROLINA

CONSTRUCTION DRAWINGS
DETAIL SHEET

DRAWING SHEET
D-1.1

PROJECT NUMBER
732-11

F:\701 - 750 Projects\732-11 Simpson Property (SNW)\Sketch Plan\732-11 D0100.dwg Nov 14, 2013 - 7:32pm BY:BrianD

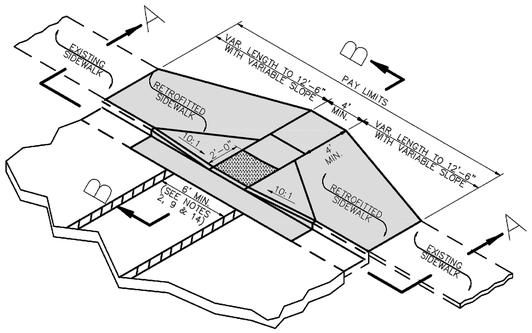

ISOMETRIC VIEW

PAY LIMITS OF CURB RAMP

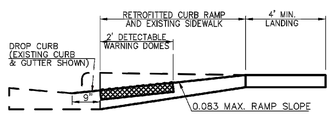

SECTION B–B

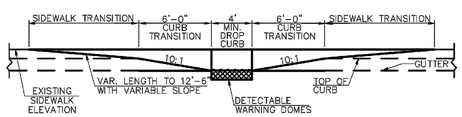

SECTION A–A

Adopted from NCDOT Detail 848.06

Curb Ramps and Existing Sidewalk Adjacent to Curb

SCALE: NONE

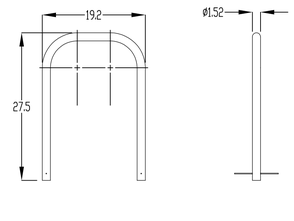

NOTE:

1. DO NOT SCALE DRAWING.
2. INSTALLATION TO BE COMPLETED IN ACCORDANCE WITH MANUFACTURER'S SPECIFICATIONS.

SARIS CYCLING GROUP
5253 VERONA RD, MADISON WI 53711
1-800-783-7257 / 1-608-274-1782
WWW.SARISPARKING.COM

THE INFORMATION CONTAINED IN THIS DRAWING IS THE SOLE PROPERTY OF SARIS CYCLING GROUP, INC. ANY REPRODUCTION IN PART OR AS A WHOLE WITHOUT THE WRITTEN PERMISSION OF SARIS CYCLING GROUP, INC. IS PROHIBITED.

TITLE: 2112 - 2 BIKE BG BIKE DOCK

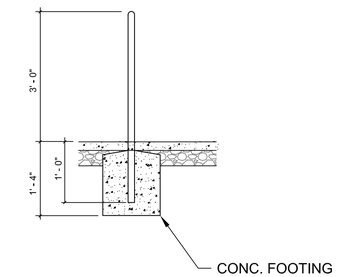

BICYCLE RACK CONSTRUCTION DETAIL

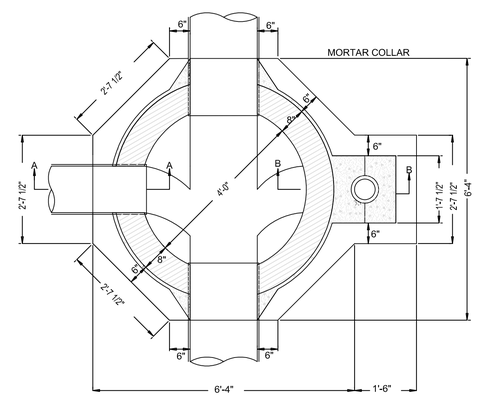

STANDARD SANITARY SEWER MANHOLE
SD 3-01
NOT TO SCALE

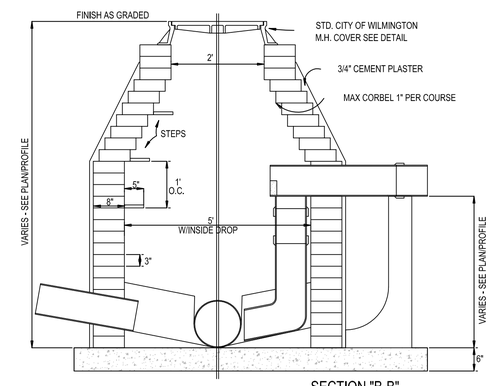

STANDARD SANITARY SEWER MANHOLE
SD 3-02
NOT TO SCALE

ANTI-FLOATATION DEVICE CALCULATIONS

RISER WIDTH = 2.0 FT
RISER LENGTH = 3.0
WALL THICKNESS = 0.33 FT
RISER DEPTH = 3.0 FT

RISER INSIDE VOLUME = 37.59 CF
RISER CONCRETE VOLUME = 15.32 CF
TOTAL BUOYANT FORCE = 3302

CONCRETE WEIGHT = 2,298.78 LBS

DESIRED FACTOR OF SAFETY = 1.5

TOTAL WEIGHT REQUIRED = 4932.31 LBS
ADDITIONAL WEIGHT REQUIRED = 2,654.53
VOLUME OF ADDITIONAL CONCRETE = 47.07 CF

BASE VOLUME = 50.63 CF
RISER INNER VOLUME = 37.60 CF
RISER CONCRETE VOLUME = 15.33 CF
TOTAL BUOYANT FORCE = 6,461.21

BASE WEIGHT = 7,593.75 LBS
RISER WEIGHT = 2,298.78 LBS
TOTAL RESISTING FORCE = 9,892.53

FACTOR OF SAFETY = 1.53

BASE WIDTH = 3.0 FT
BASE LENGTH = 4.0 FT
BASE DEPTH = 1.0 FT

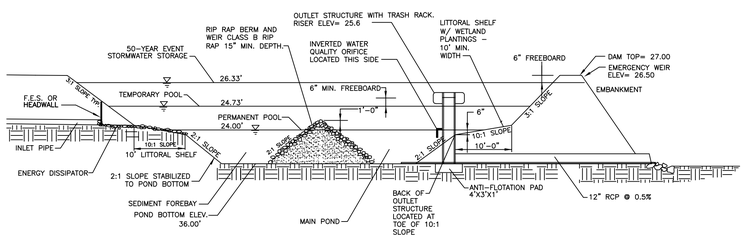

NOT TO SCALE

WETPOND PROFILE
BMP FIG. 4.2.2

FOR REVIEW ONLY-
NOT FOR CONSTRUCTION

PLAN IS SUBJECT TO REVISIONS DURING THE CONSTRUCTION APPROVAL PROCESS

THIS DRAWING IS THE PROPERTY OF:
Spaulding & Norris, PA

and is not to be reproduced or copied in whole or in part without permission from Spaulding & Norris, PA. This drawing is not to be used on any other project and is to be returned to Spaulding & Norris, PA, upon request.

NO.	REVISION	DATE
1.	PER CIPUA COMMENTS	2/27/2012
2.	PER CIPUA COMMENTS	3/13/2012
3.	PER REVISED BLDG. FOOTPRINT	1/18/2013
4.	PER CIPUA COMMENTS	9/13/2013
5.	PER TRC CAVE COMMENTS	11/14/2013

SEAL: NORTH CAROLINA PROFESSIONAL SEAL 19431 ENGINEER STEPHANIE L. NORRIS 11-14-13

S&N SPAULDING & NORRIS, PA
Design Consultants
972 Trinity Road
Raleigh, North Carolina 27607
Phone (919) 854-7990 Fax (919) 854-7925

PREPARED FOR :
SNR, LLP
972 TRINITY ROAD
RALEIGH, NC 27607
DATE : 1-18-12
S&N FIRM CERTIFICATION #: C-1875
PROJECT ENGINEER:
STEPHANIE L. NORRIS, P.E.
PROJECT CADD DESIGNER:
BRIAN K. JONES
PROJECT SURVEYOR:

LOCKWOOD VILLAGE APTS

CITY OF WILMINGTON, NEW HANOVER COUNTY, NORTH CAROLINA

CONSTRUCTION DRAWINGS
DETAIL SHEET

DRAWING SHEET
D-1.2

PROJECT NUMBER
732-11

F:\701 – 750 Projects\732-11 Simpson Property (SNW)\Sketch Plan\732-11 D0100.dwg Nov 14, 2013 – 7:32pm BY:BrianD

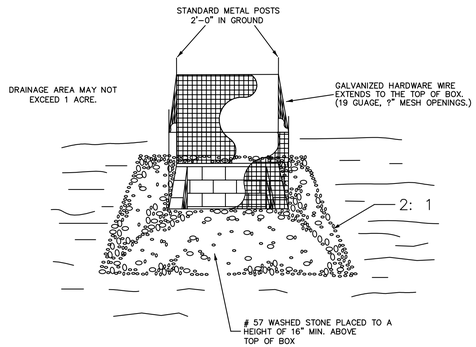

STANDARD CATCH BASIN / YARD INLET PROTECTION

SEE DENR STANDARDS & SPECS.
FOR COMPLETE DESIGN CRITERIA & MAINTENANCE

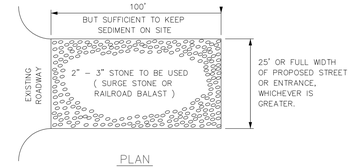

PLAN

NOTES:

1. PUT SILT FENCE OR TREE PROTECTION FENCE UP TO ENSURE CONSTRUCTION ENTRANCE IS USED.
2. IF CONSTRUCTION ON THE SITES ARE SUCH THAT THE MUD IS NOT REMOVED BY THE VEHICLE TRAVELING OVER THE STONE, THEN THE TIRES OF THE VEHICLE MUST BE WASHED BEFORE ENTERING THE PUBLIC ROAD.
3. IF A PROJECT CONTINUES TO PULL MUD AND DEBRIS ON TO THE PUBLIC ROAD, THE GOVERNING AUTHORITY WILL CLEAN THE AREA AND INVOICE THE FINANCIALLY RESPONSIBLE PERSON AS INDICATED ON THE FINANCIAL RESPONSIBILITY FORM.

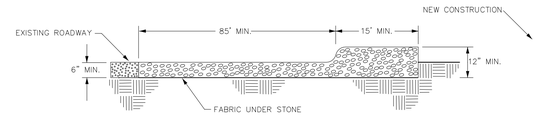

CROSS SECTION

CONSTRUCTION ENTRANCE

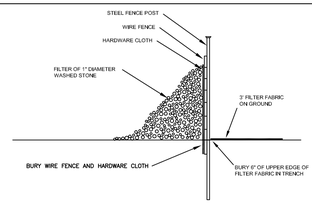

SECTION VIEW

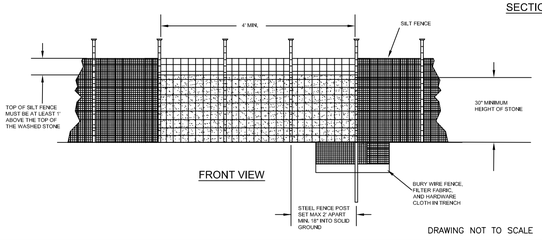

FRONT VIEW

DRAWING NOT TO SCALE

SILT FENCE OUTLET

DATE	REVISIONS

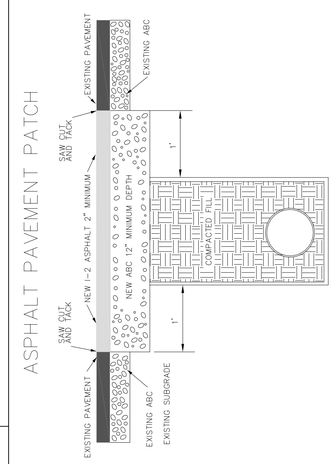

ASPHALT PAVEMENT PATCH

NOTES:

1. THE PAVEMENT SHALL BE DEFINED BY A STRAIGHT EDGE FORMED BY A MACHINED SAW CUT.
2. THE TRENCH SUBGRADE MATERIAL SHALL BE BACKFILLED WITH SUITABLE MATERIAL AND COMPACTED TO A DENSITY OF AT LEAST 95% OF THAT OBTAINED BY COMPACTING A SAMPLE OF THE MATERIAL IN ACCORDANCE WITH AASHTO T-99 AS MODIFIED BY NCDOT.
3. THE FINAL 1' OF FILL SHALL CONSIST OF ABC MATERIAL COMPACTED TO A DENSITY EQUAL TO 100% OF THAT OBTAINED BY COMPACTING A SAMPLE OF THE MATERIAL IN ACCORDANCE WITH AASHTO T-180 AS MODIFIED BY NCDOT. BITUMINOUS BASE OR BINDER MAY BE SUBSTITUTED IF APPROVED BY THE ENGINEER.
4. THE ENTIRE THICKNESS/VERTICAL EDGE OF THE CUT SHALL BE TACKED.
5. THE SAME DEPTH OF PAVEMENT MATERIAL WHICH EXISTS SHALL BE REINSTALLED, BUT IN NO CASE SHALL THE ASPHALT BE LESS THAN 2" THICK.
6. THE ASPHALT PAVEMENT MATERIAL SHALL BE INSTALLED AND COMPACTED THOROUGHLY TO ACHIEVE A SMOOTH LEVEL PATCH.

REVISIONS	DATE: 7/13/00	DRAWN BY: JTB
10/30/07 JTT	ASPHALT PAVEMENT PATCH	
1/17/07 WDF		
5/25/07 JTT		
	STD. # 20.41	

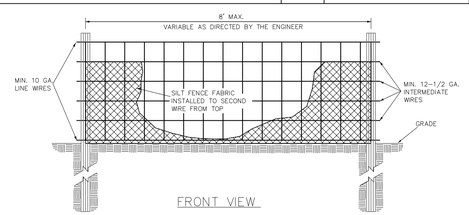

FRONT VIEW

NOTES:

– END OF SILT FENCE SHOULD BE TURNED UPHILL
– SEE N.C. STATE DENR PRACTICE STANDARDS & SPECIFICATIONS SEDIMENT FENCE SET FOR CONDITIONS WHERE PRACTICE APPLIES; PLANNING CONSIDERATIONS & DESIGN CRITERIA. (HOWEVER FLOW SHALL NOT RUN PARRALLEL WITH THE TOE OF THE FENCE).

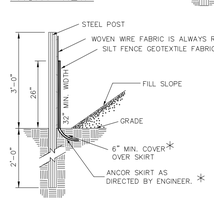

SIDE VIEW

* FOR REPAIR OF SILT FENCE FAILURES, USE No. 57 WASHED STONE. FOR ANCHOR WHEN SILT FENCE IS PROTECTING CATCH BASIN. IN EACH CASE THE SILT FENCE IS TO BE PROPERLY ENTRENCHED & THE STONE SHALL BE AT A MINIMUM OF 16" ABOVE GRADE AT THE DIRECTION OF FLOW & BETWEEN 60 – 45 DEGREES.

STANDARD TEMPORARY SILT FENCE

Details Provided by APPIAN Consulting Engineers – www.appianengineers.com 06/07/2010 – 2:35:29 PM

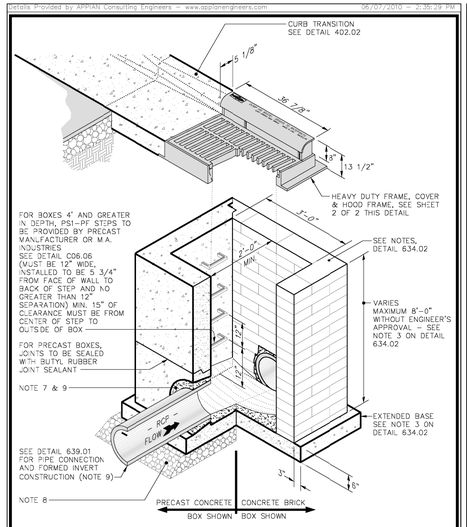

TYPICAL CATCH BASIN AND CURB INLET WITH HOOD

Details Provided by APPIAN Consulting Engineers – www.appianengineers.com 06/07/2010 – 2:35:16 PM

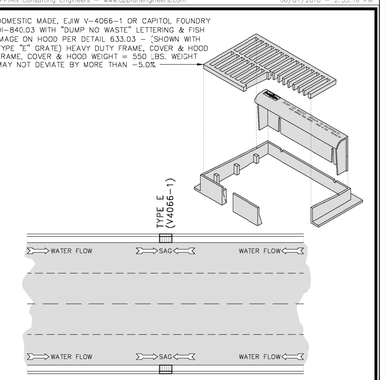

NOTES:

1. Use either concrete building brick – ASTM C55, grade N, type 1 or clay brick – ASTM C32, grade MS.
2. Mortar to be type M.
3. Concrete pipe to be class III.
4. Precast boxes to conform to latest ASTM C-913
5. Precast boxes concrete strength to be a minimum 4,000 PSI at 28 days.
6. See detail 634.02 for miscellaneous notes.
7. All penetrations in boxes shall be inspected prior to backfilling structure with stone around pipe.
8. For precast boxes, provide a minimum of 6" of #57 stone for bedding.
9. Place #57 stone around pipe penetrations into box. See detail 639.01.
10. All Iron Castings to be domestic made.

TYPICAL CATCH BASIN AND CURB INLET WITH HOOD

NO.	REVISION	DATE
1.	PER CFPUA COMMENTS	2/27/2012
2.	PER CFPUA COMMENTS	3/13/2012
3.	PER REVISED BLDG. FOOTPRINT	1/18/2013
4.	PER CFPUA COMMENTS	8/14/2013
5.	PER TRC COVR COMMENTS	11/14/2013

SEAL: NORTH CAROLINA PROFESSIONAL SEAL 19431 ENGINEERING THOMAS M. NORRIS 11-14-13

S&N SPAULDING & NORRIS, PA
Design Consultants
972 Trinity Road 27607
Raleigh, North Carolina
Phone (919) 854-7990 Fax (919) 854-7925

PREPARED FOR :
SNN, LLP
972 TRINITY ROAD
RALEIGH, NC 27607
DATE : 1-18-12
S&N FIRM CERTIFICATION #: C-1875
PROJECT ENGINEER:
STEPHANIE L. NORRIS, P.E.
PROJECT CADD DESIGNER:
BRIAN M. DOWS
PROJECT SURVEYOR:

LOCKWOOD VILLAGE APTS

CITY OF WILMINGTON, NEW HANOVER COUNTY, NORTH CAROLINA

CONSTRUCTION DRAWINGS

DETAIL SHEET

DRAWING
SHEET
D-1.3

PROJECT NUMBER
732-11

FOR REVIEW ONLY-
NOT FOR CONSTRUCTION

PLAN IS SUBJECT TO REVISIONS DURING THE CONSTRUCTION APPROVAL PROCESS

THIS DRAWING IS THE PROPERTY OF:
Spaulding & Norris, PA
and is not to be reproduced or copied in whole or in part without permission from Spaulding & Norris, PA. This drawing is not to be used on any other project and is to be returned to Spaulding & Norris, PA, upon request.

F:\701 – 750 Projects\732-11 Simpson Property (SNN)\Sketch Plan\732-11 D0100.dwg Nov 14, 2013 – 7:33pm BY:BrianD

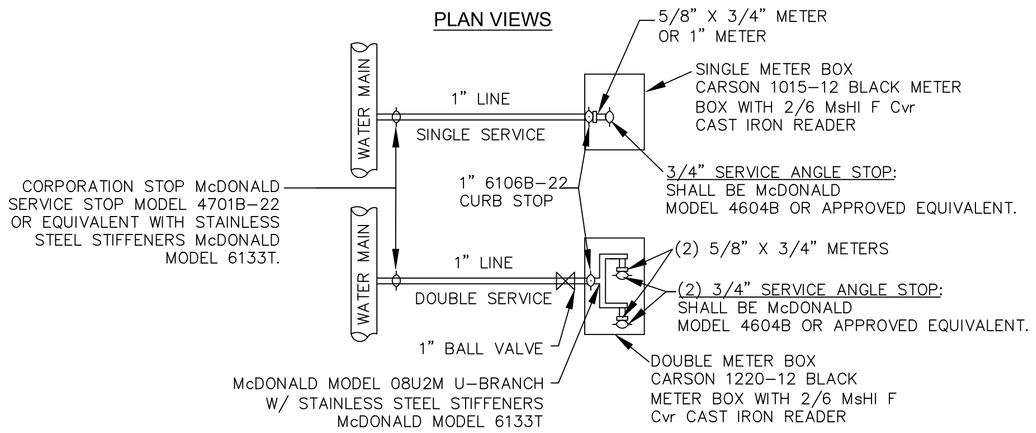

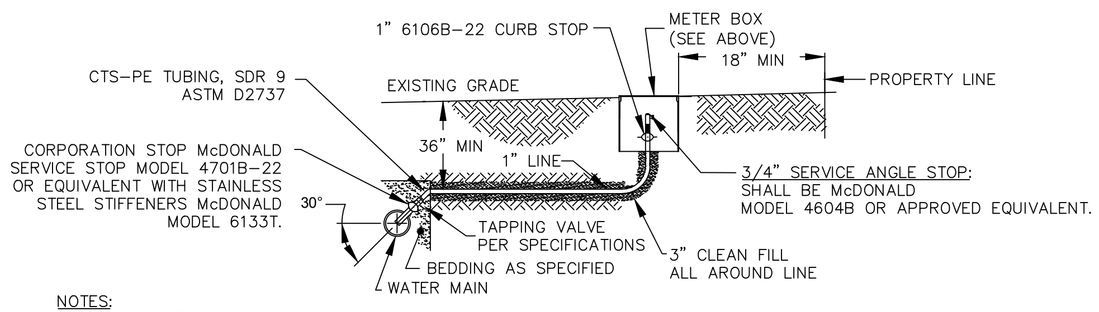

NOTES:
1. NO JOINT SHALL BE INSTALLED BETWEEN THE MAIN SERVICE TAP AND THE METER STOP. ALL SERVICES SHALL BE INSTALLED PERPENDICULAR TO MAIN.
2. SERVICE SADDLES ON PVC MAINS SHALL BE WIDE BAND BRASS BODY: SADDLE McDONALD 3801 OR EQUIVALENT
3. METER BOXES SUSCEPTIBLE TO TRAFFIC SHALL CONFORM TO ASTM A48, CLASS 30B AND AASHTO H20 LOAD RATING STANDARDS (SIP MODEL 4240 OR APPROVED EQUIVALENT)

SINGLE SERVICE SECTION VIEW

TYPICAL WATER SERVICE CONNECTION FOR RESIDENTIAL SINGLE FAMILY HOME ON CFPUA WATER SYSTEM

NOT TO SCALE

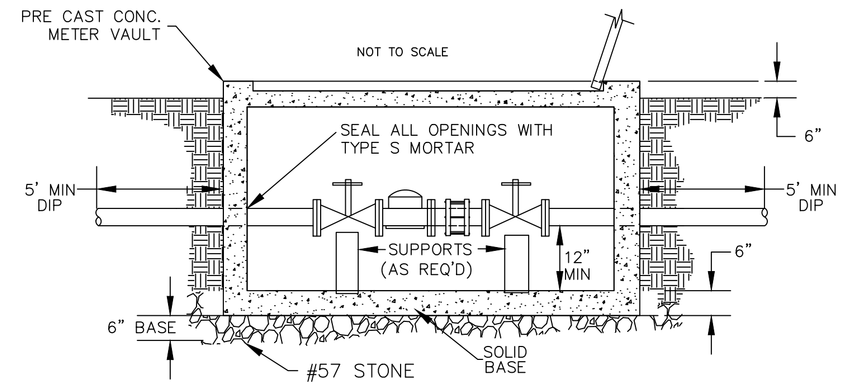

METER VAULT SECTION A-A

NOT TO SCALE

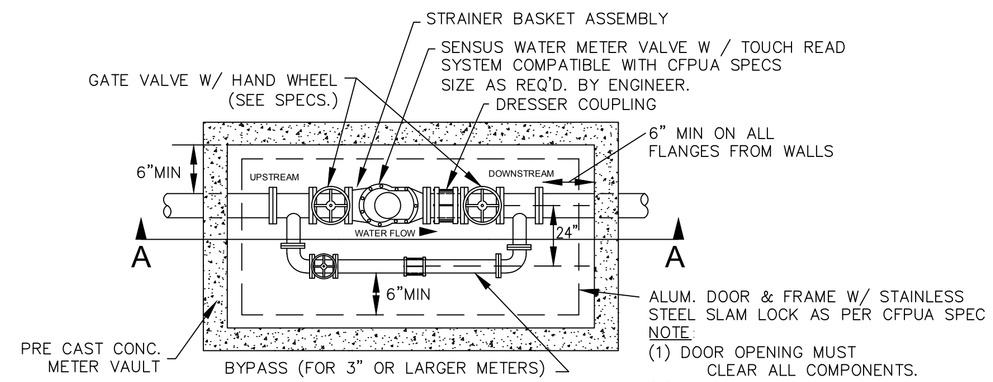

WATER METER VAULT

FOR WATER METERS LARGER THAN 2"

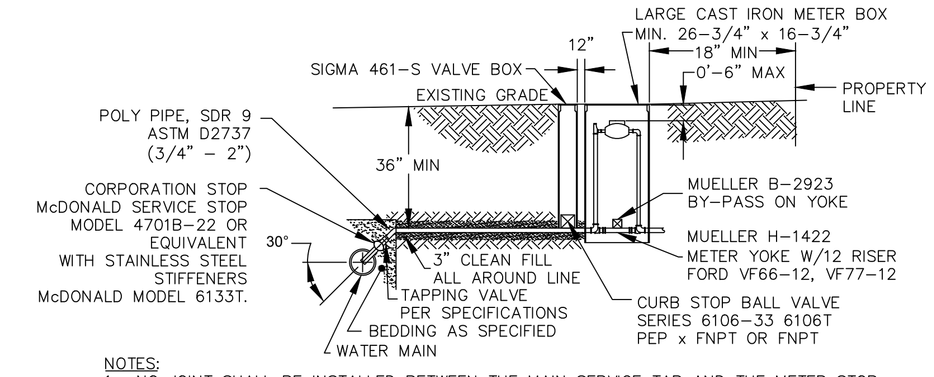

NOTES:
1. NO JOINT SHALL BE INSTALLED BETWEEN THE MAIN SERVICE TAP AND THE METER STOP. ALL SERVICES SHALL BE INSTALLED PERPENDICULAR TO MAIN.
2. SERVICE SADDLES ON PVC MAINS SHALL BE WIDE BAND BRASS BODY: SADDLE McDONALD 3801 OR EQUIVALENT
3. METER BOXES SUSCEPTIBLE TO TRAFFIC SHALL CONFORM TO ASTM A48, CLASS 30B AND AASHTO H20 LOAD RATING STANDARDS (SIP MODEL 4240 OR APPROVED EQUIVALENT)

LARGE METER BOX

FOR 1 1/2" OR 2" WATER SERVICES

NOT TO SCALE

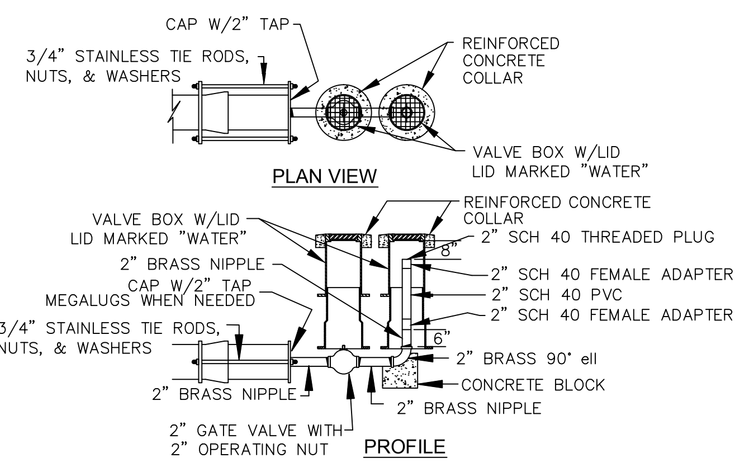

2" BLOW-OFF

NOT TO SCALE

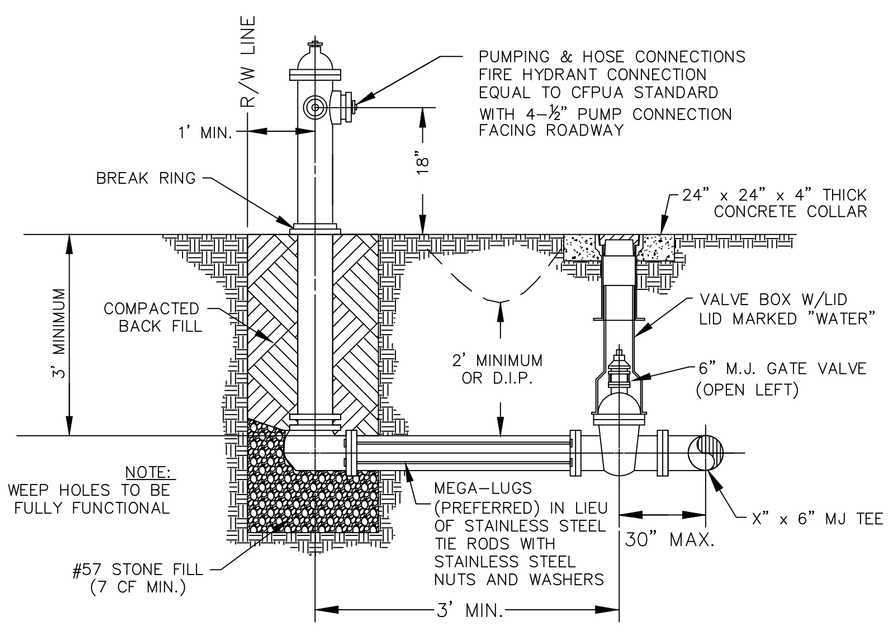

FIRE HYDRANT ASSEMBLY

NOT TO SCALE

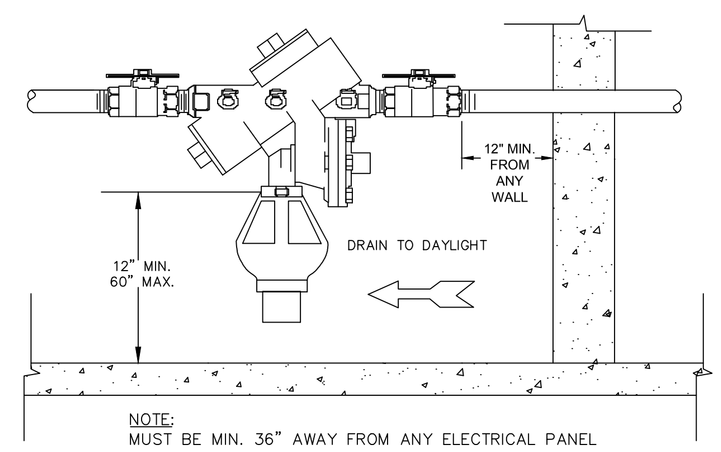

NOTE:
MUST BE MIN. 36" AWAY FROM ANY ELECTRICAL PANEL

INDOOR HORIZONTAL INSTALLATION

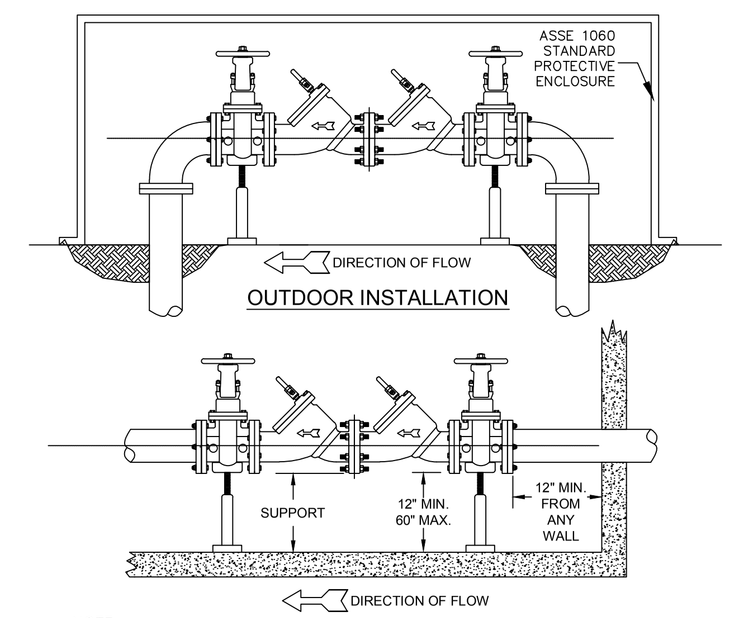

NOTE:
1. MUST BE MIN. 36" AWAY FROM ANY ELECTRICAL PANEL
2. VALVE REQ'D DOWNSTREAM OF BACKFLOW ASSEMBLY
3. VERTICAL INSTALLATION SHALL BE DESIGNED AND SUBMITTED TO CFPUA ESMD FOR APPROVAL

INDOOR INSTALLATION

DOUBLE CHECK VALVE ASSEMBLY

NOT TO SCALE

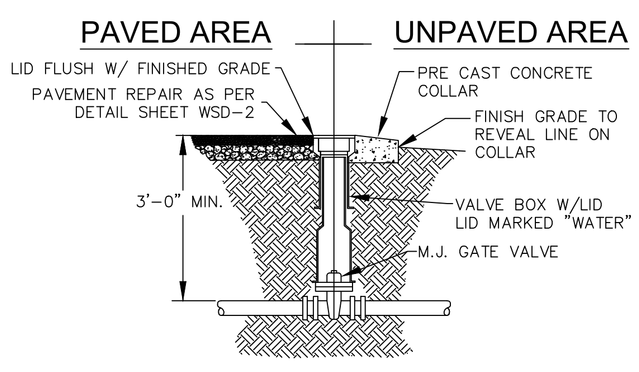

VALVE DETAIL

NOT TO SCALE

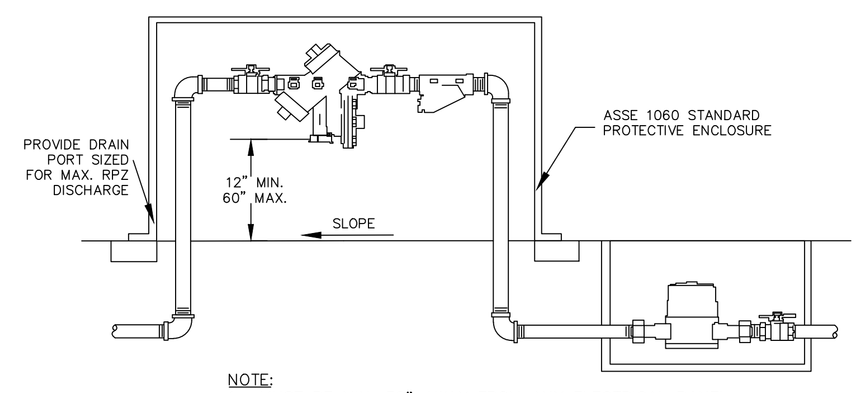

NOTE:
1. MUST BE MIN. 36" AWAY FROM ANY ELECTRICAL PANEL
2. VALVE REQ'D DOWNSTREAM OF BACKFLOW ASSEMBLY
3. VERTICAL INSTALLATION SHALL BE DESIGNED AND SUBMITTED TO CFPUA ESMD FOR APPROVAL

OUTDOOR HORIZONTAL INSTALLATION

REDUCED PRESSURE PRINCIPLE ASSEMBLY

NOT TO SCALE

GENERAL NOTES:

1. NO EXCAVATED MATERIAL SHALL BE PLACED IN ANY STREAM, DITCH OR DRAINAGE-WAY.
2. THE CONTRACTOR IS RESPONSIBLE FOR LOCATING ALL UNDERGROUND UTILITIES BEFORE ANY CONSTRUCTION BEGINS.
3. THE CONTRACTOR IS RESPONSIBLE FOR TEMPORARY SEDIMENT AND EROSION CONTROL MEASURES WHILE CONSTRUCTION IS IN PROGRESS.
4. THE CONTRACTOR IS RESPONSIBLE FOR STABILIZATION OF ALL DISTURBED AREAS.
5. THE CONTRACTOR IS RESPONSIBLE FOR LAY DOWN & STOCKPILE AREAS (TO ARRANGE AND ENSURE COMPLIANCE WITH ALL LOCAL AND STATE REGULATIONS).

THE DETAILS SHOWN HEREON SUPERCEDE CFPUA WRITTEN TECHNICAL SPECIFICATIONS VERSIONS 1.00 - 1.04

REV:	DESCRIPTION:	DATE:

WATER DISTRIBUTION SYSTEM STANDARD DETAILS

WATER STANDARD DETAILS

WSD-1

CAPE FEAR PUBLIC UTILITY AUTHORITY
235 GOVERNMENT CENTER DRIVE
WILMINGTON, NC 28403
OFFICE: (910)332-6560
Stewardship. Sustainability. Service.

DATE: 1/9/12
SCALE: N/A
DRAWN BY: CFPUA
CHECKED BY: CFPUA
PROJECT NO.:

SHEET NO: 1 / 2

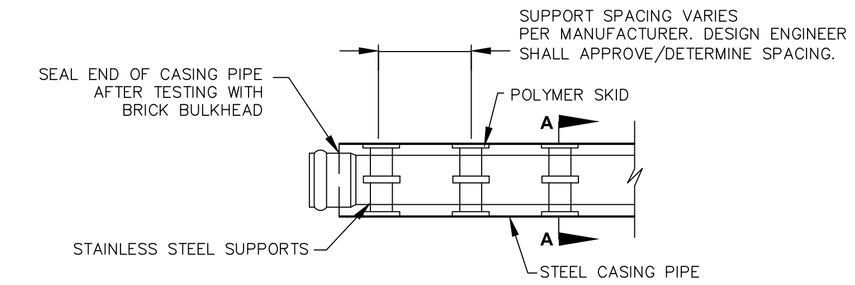

NOTE: PIPE SUPPORT TO BE PLACED TO PROVIDE PROPER SUPPORT, ALIGNMENT, AND GRADE AS SPECIFIED. CONTINUOUS SUPPORTS MAY BE USED AS ALTERNATIVE. OIL, GREASE, OR PETROLEUM PRODUCT MAY NOT BE USED AS LUBRICANT.

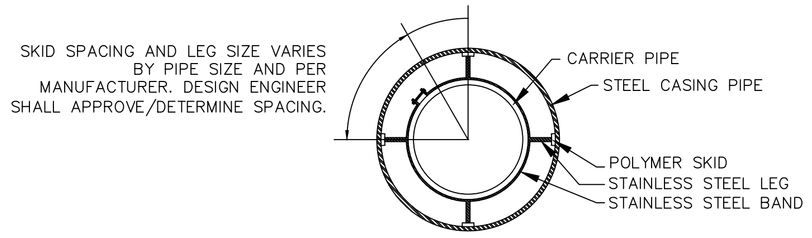

SECTION A-A

NOT TO SCALE

PIPE CASING SUPPORT DETAIL

NOT TO SCALE

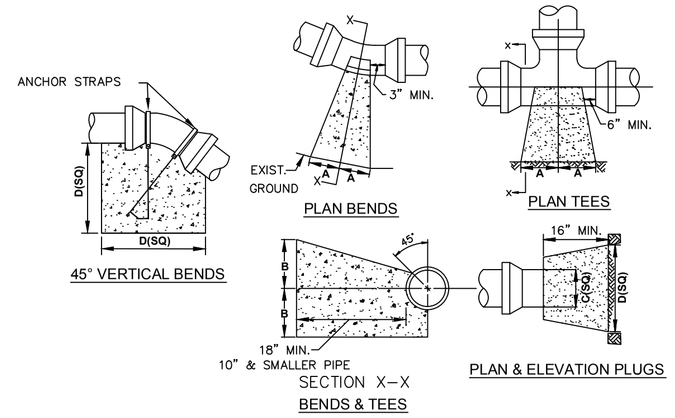

SIZE	90° BENDS		45° BENDS		22 1/2° BENDS		TEES/PLUGS		45° VERT. BENDS
	A	B	A	B	A	B	A	B	
3"	8"	6"	5"	6"	3"	7"	6"	8"	27"
4"	8"	9"	5"	8"	3"	11"	6"	9"	28"
6"	14"	11"	9"	9"	8"	8"	12"	9"	36"
8"	16"	16"	12"	12"	10"	13"	14"	13"	42"
10"	18"	22"	15"	14"	14"	16"	18"	15"	50"
12"	20"	28"	18"	17"	16"	16"	22"	18"	62"
14"	26"	29"	21"	19"	18"	18"	26"	20"	72"
16"	33"	29"	25"	21"	20"	21"	32"	21"	83"
18"	40"	30"	28"	24"	22"	23"	36"	24"	88"

NOTES: 1. BASED ON 160 PSI TEST PRESSURE AND 2000 PSF SOIL BEARING CAPACITY.
2. ALL BEARING SURFACES TO BE CARRIED TO UNDISTURBED GROUND.
3. USE MEG-A-LUG (PREFERRED) IN LIEU OF BLOCKING AND RODDING.

THRUST BLOCK DETAIL

NOT TO SCALE

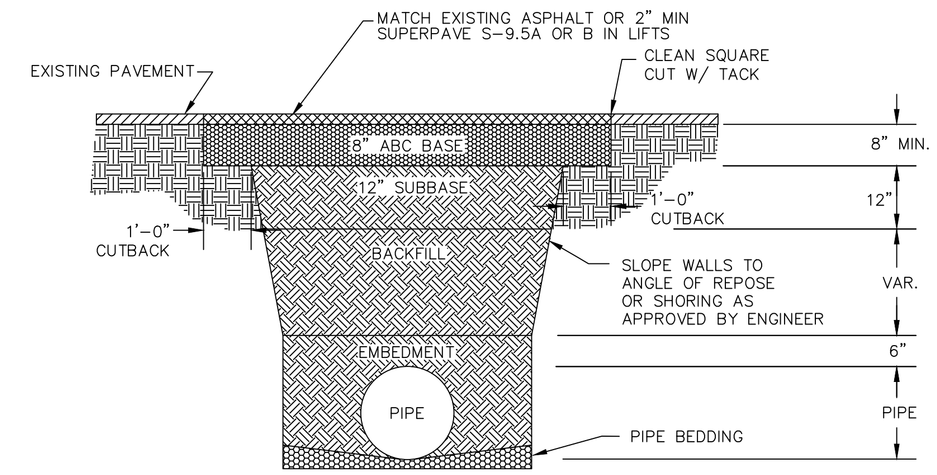

NOTES:
1. BACKFILL SHALL BE SUITABLE MATERIAL THAT IS FREE FROM HEAVY CLAY, GUMBOS, DEBRIS, ORGANICS AND LITTLE TO NO EXCESSIVE MOISTURE.
2. SELECT BACKFILL MAY BE SUBSTITUTED OR REQUIRED BY CITY TO ACHIEVE COMPACTION, (I.E. #57, ABC, CRUSHED LIMESTONE, CLEAN SAND, FLOWABLE FILL, ETC).
3. 8-INCH OF ABC BASE MATERIAL SHALL BE USED ON CITY STREETS.
4. BACKFILL AND BASE MATERIALS SHALL BE COMPACTED 12" MINIMUM LIFTS
5. SOIL SHALL BE COMPACTED BY A MECHANIZED TAMPER (I.E JUMPING JACK), HOWEVER, VIBRATORY ROLLERS > 18" WIDTH MAY BE USED FOR LARGER EXCAVATIONS. THE PLATE TAMP METHOD SHALL NOT BE USED.
6. ALL APPROVED CASTINGS SHALL BE SET FLUSH TO GRADE AND SUPPORTED IF APPLICABLE.
7. ABC BASE AND SUBBASE COMPACTED TO 98% AND BACKFILL AND EMBEDMENT COMPACTED TO 90% AS DETERMINED BY THE MODIFIED PROCTOR AASHTO METHOD T-99.
8. 1-FOOT CUTBACKS OF ASPHALT SHALL BE PREPARED ON UNDISTURBED SOIL. MINIMUM ASPHALT DENSITY IS 90%.

PAVEMENT REPAIR WHERE PIPE INSTALLED

(FOR PRIVATE ROADS AND PAVED AREAS;
CONTRACTOR TO MEET MIN. REQUIREMENTS AS DEFINED BY
RIGHT-OF-WAY OWNER FOR PUBLIC ROAD REPAIRS)

NOT TO SCALE

NOTE:
PAVEMENT WIDTH AND LOCATION IN R/W VARIES. SEE PLAN FOR INDIVIDUAL LOCATION.

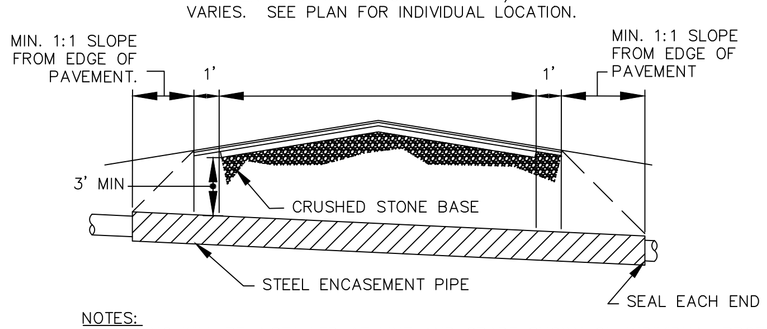

NOTES:
1. CASING WILL BE INSTALLED AT LINE AND GRADE SHOWN ON INDIVIDUAL PROFILE FOR EACH CROSSING. BORING/JACKING TO LINE AND GRADE IS REQUIRED.
2. TRACER WIRE SHALL BE CONTINUED THROUGH CASING

TYPICAL BORING/JACKING DETAIL

NOT TO SCALE

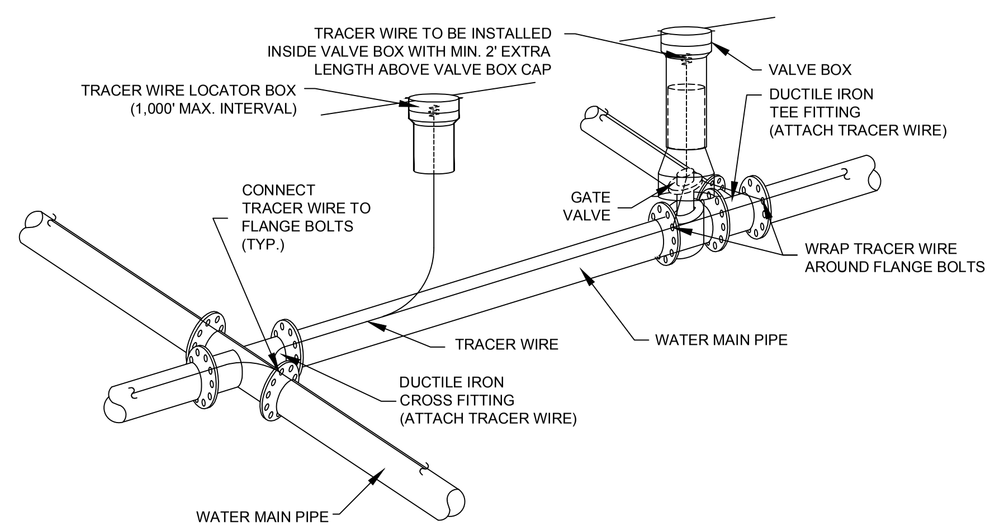

NOTES:
1. TRACER WIRE SHALL BE #10 COPPER SOLID CORE COPPER WIRE WITH GAS AND OIL RESISTANT INSULATION
2. WIRE SHALL BE STRAPPED TO ALL PVC WATER MAIN PIPING WITH DUCT TAPE AT 12-FT. INTERVALS.
3. SECURE WIRE TO ALL TEE AND CROSS FITTINGS.
4. ALL WIRE SPLICES SHALL HAVE WATER PROOF WIRE CONNECTIONS.

TRACER WIRE DETAIL

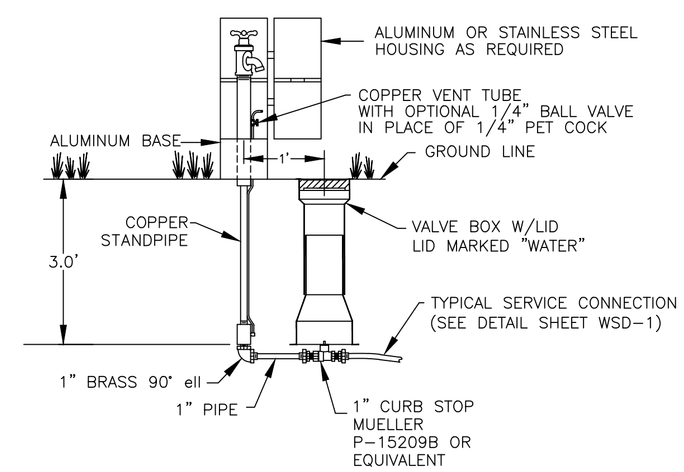

SAMPLING STATION

NOT TO SCALE

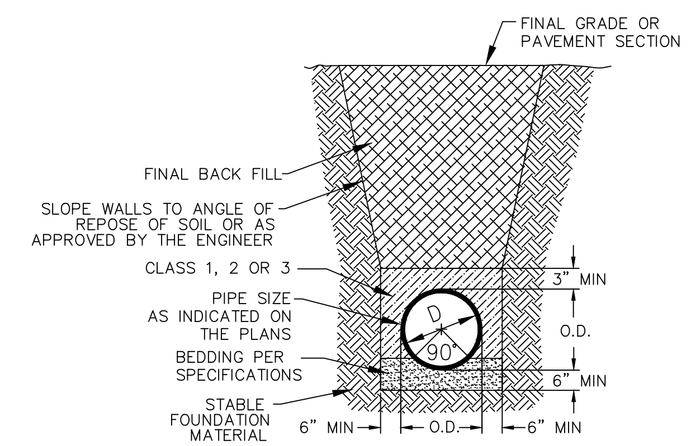

CL 50 DUCTILE IRON
DR 18 PVC PIPE TRENCH DETAIL

NOT TO SCALE

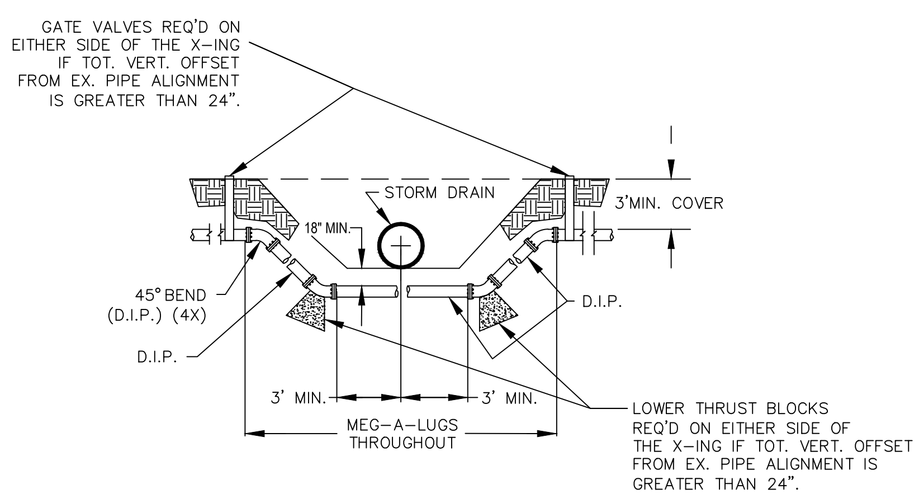

NOTE: USE D.I.P. (CL50 OR BETTER)

WATER MAIN DITCH
& STORM DRAIN CROSSING

NOT TO SCALE

GENERAL NOTES:

1. NO EXCAVATED MATERIAL SHALL BE PLACED IN ANY STREAM, DITCH OR DRAINAGE-WAY.
2. THE CONTRACTOR IS RESPONSIBLE FOR LOCATING ALL UNDERGROUND UTILITIES BEFORE ANY CONSTRUCTION BEGINS.
3. THE CONTRACTOR IS RESPONSIBLE FOR TEMPORARY SEDIMENT AND EROSION CONTROL MEASURES WHILE CONSTRUCTION IS IN PROGRESS.
4. THE CONTRACTOR IS RESPONSIBLE FOR STABILIZATION OF ALL DISTURBED AREAS.
5. THE CONTRACTOR IS RESPONSIBLE FOR LAY DOWN & STOCKPILE AREAS (TO ARRANGE AND ENSURE COMPLIANCE WITH ALL LOCAL AND STATE REGULATIONS).

NOT TO SCALE

THE DETAILS SHOWN HEREON SUPERCEDE CFPUA WRITTEN TECHNICAL SPECIFICATIONS VERSIONS 1.00 - 1.04

REV:	DESCRIPTION:	DATE:

WATER DISTRIBUTION SYSTEM STANDARD DETAILS

WATER STANDARD DETAILS
WSD-2

CAPE FEAR PUBLIC UTILITY AUTHORITY
235 GOVERNMENT CENTER DRIVE
WILMINGTON, NC 28403
OFFICE: (910)332-6560
Stewardship. Sustainability. Service.

DATE: 1/9/12
SCALE: N/A
DRAWN BY: CFPUA
CHECKED BY: CFPUA
PROJECT NO.:

SHEET NO: 2 / 2

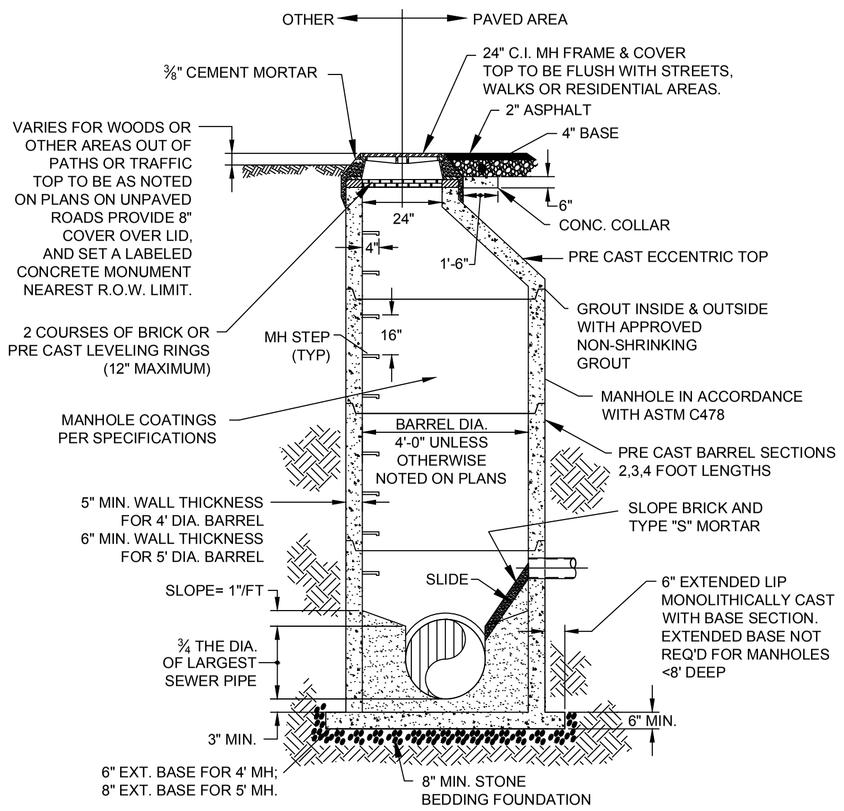

PRECAST CONCRETE OFFSET MANHOLE TYPICAL

(LESS THAN 30" DROP)
NOT TO SCALE

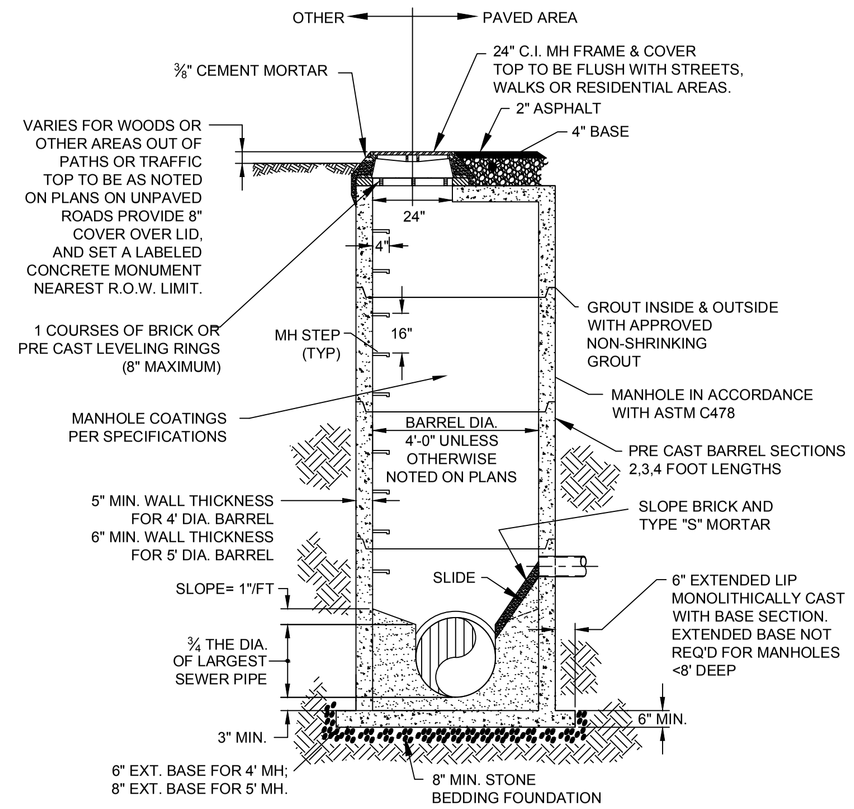

PRECAST CONCRETE FLAT TOP MANHOLE TYPICAL

(LESS THAN 30" DROP)
NOT TO SCALE

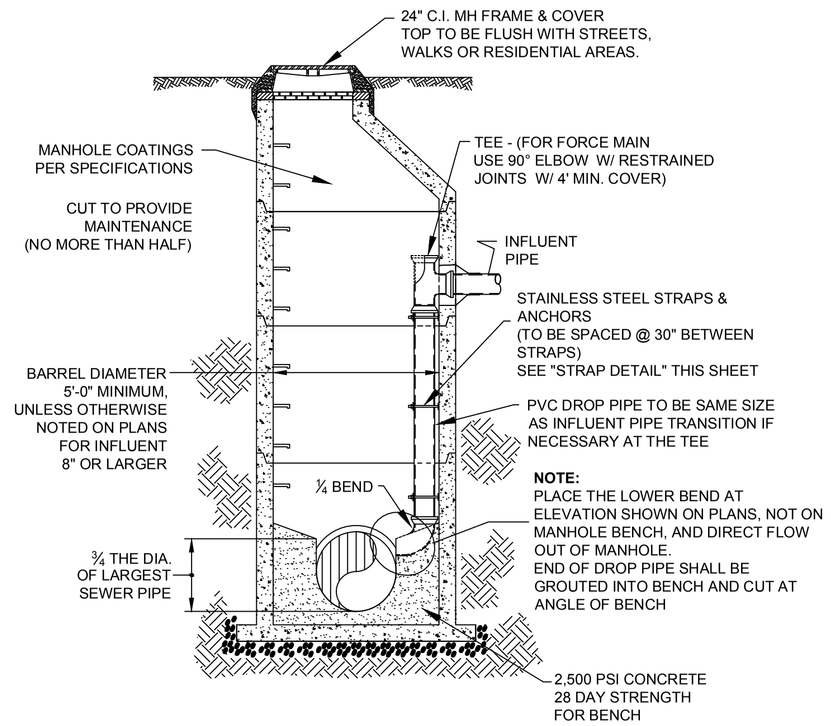

DROP MANHOLE

(MORE THAN 30" DROP)
NOT TO SCALE

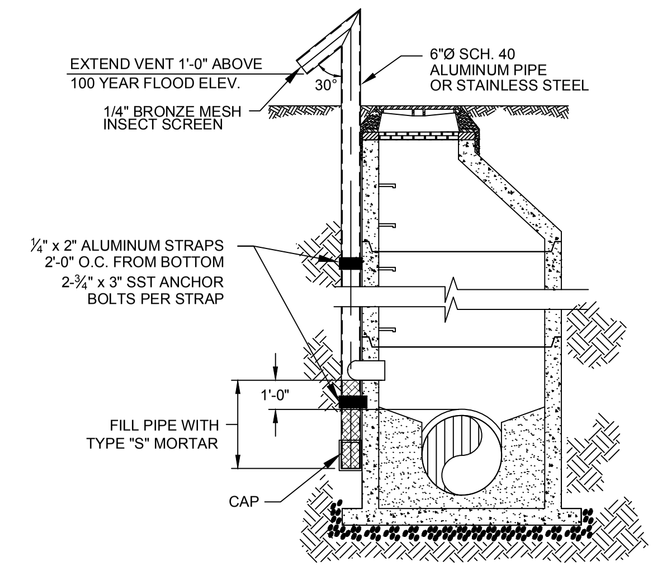

STANDARD VENT MANHOLE

NOT TO SCALE

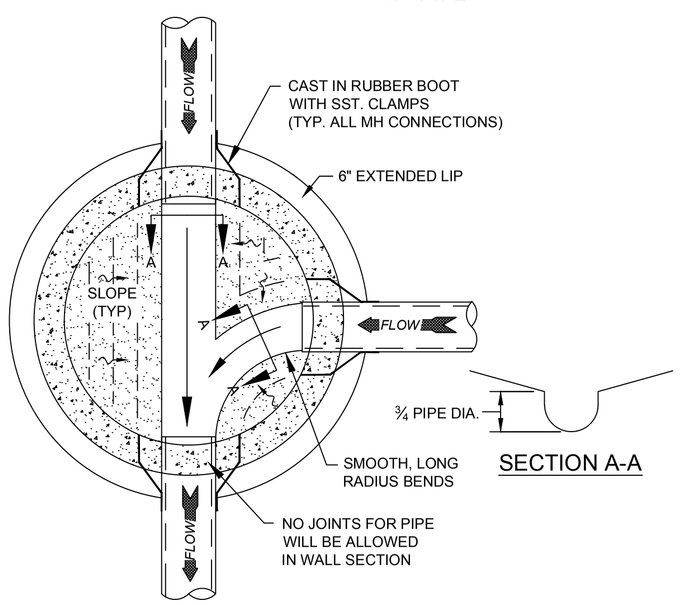

SECTION A-A

MANHOLE FLOOR PLAN

NOT TO SCALE

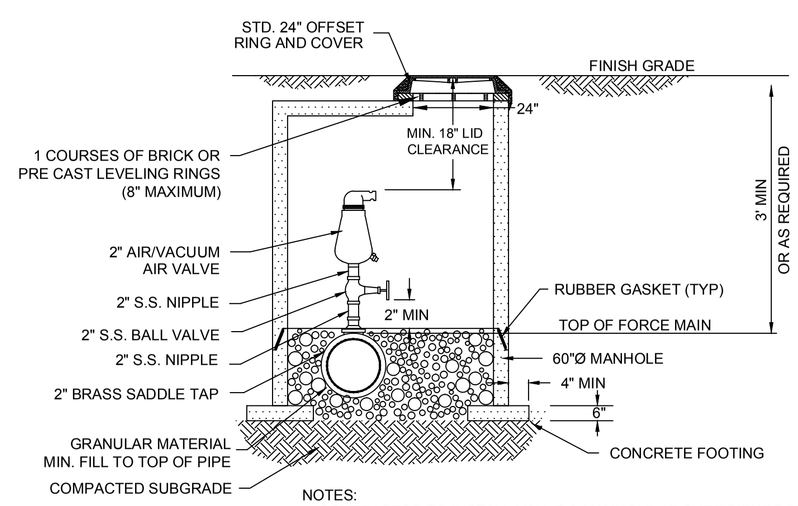

NOTES:
1. CONTRACTOR TO INSTALL VALVE & MANHOLE AT SUFFICIENT DEPTH TO ALLOW FOR ACCESS.
2. FORCE MAIN TO BE OFFSET IN MANHOLE
3. REFER TO SPECIFICATIONS FOR ADDITIONAL DETAILS.
4. USE SOLID BASE IN AREAS WITH HISTORICALLY HIGH GROUNDWATER (WITHIN 2' OF FORCE MAIN INVERT)

AIR / VACUUM AND AIR RELEASE COMBINATION VALVE

NOT TO SCALE

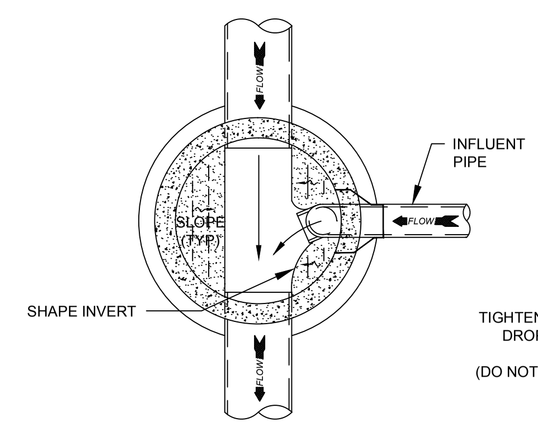

DROP MANHOLE FLOOR PLAN

NOT TO SCALE

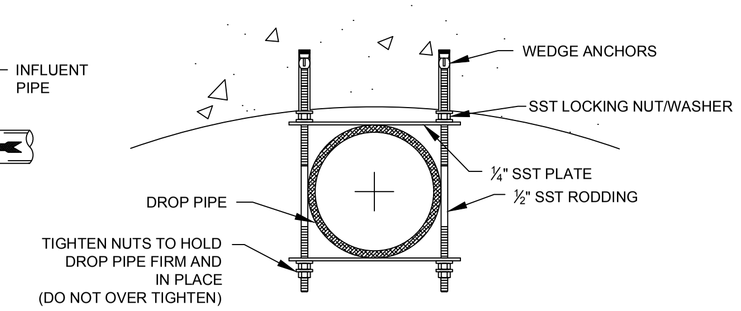

NOTE: ALL PARTS TO BE SST.

STRAP DETAIL

NOT TO SCALE

1. SEWER GUARDS REQUIRED AT ALL MANHOLES. STAINLESS STEEL SEWER GUARDS REQUIRED AT MANHOLES LOCATED IN TRAFFIC AREAS.
2. SERVICES SHALL BE PERPENDICULAR TO MAIN AND TERMINATE AT R/W LINE. SERVICES IN CUL-DE-SACS ARE REQUIRED TO BE PERPENDICULAR, OR MUST ORIGINATE IN MANHOLE AND TERMINATE AT RIGHT-OF-WAY LINE.
3. ALL SERVICES TYING INTO DUCTILE IRON MAINS SHALL BE CONSTRUCTED OF CLASS 50, DIP, WITH PROTECTO 401 CERAMIC EPOXY LINING.
4. MINIMUM 10' UTILITIES EASEMENT PROVIDED ALONG THE FRONTAGE OF ALL LOTS AND AS SHOWN FOR NEW DEVELOPMENTS.
5. NO FLEXIBLE COUPLINGS SHALL BE USED.
6. ALL STAINLESS STEEL FITTINGS SHALL BE 3/16".

STANDARD SEWER NOTES

(REQUIRED ON ALL SEWER PLAN AND PROFILE SHEETS)

GENERAL NOTES:

1. NO EXCAVATED MATERIAL SHALL BE PLACED IN ANY STREAM, DITCH OR DRAINAGE-WAY.
2. THE CONTRACTOR IS RESPONSIBLE FOR LOCATING ALL UNDERGROUND UTILITIES BEFORE ANY CONSTRUCTION BEGINS.
3. THE CONTRACTOR IS RESPONSIBLE FOR TEMPORARY SEDIMENT AND EROSION CONTROL MEASURES WHILE CONSTRUCTION IS IN PROGRESS.
4. THE CONTRACTOR IS RESPONSIBLE FOR STABILIZATION OF ALL DISTURBED AREAS.
5. THE CONTRACTOR IS RESPONSIBLE FOR LAY DOWN & STOCKPILE AREAS (TO ARRANGE AND INSURE COMPLIANCE WITH ALL LOCAL AND STATE REGULATIONS).

THE DETAILS SHOWN HEREON SUPERCEDE CFPUA WRITTEN TECHNICAL SPECIFICATIONS VERSIONS 1.00 - 1.04

REV:	DESCRIPTION:	DATE:

SANITARY SEWER STANDARD DETAILS

SANITARY SEWER STANDARD DETAILS
SS-1

CAPE FEAR PUBLIC UTILITY AUTHORITY
235 GOVERNMENT CENTER DRIVE
WILMINGTON, NC 28403
OFFICE: (910)332-6560
Stewardship. Sustainability. Service.

DATE: 1/9/12
SCALE: N/A
DRAWN BY: CFPUA
CHECKED BY: CFPUA
PROJECT NO. :

SHEET NO: 1 / 4

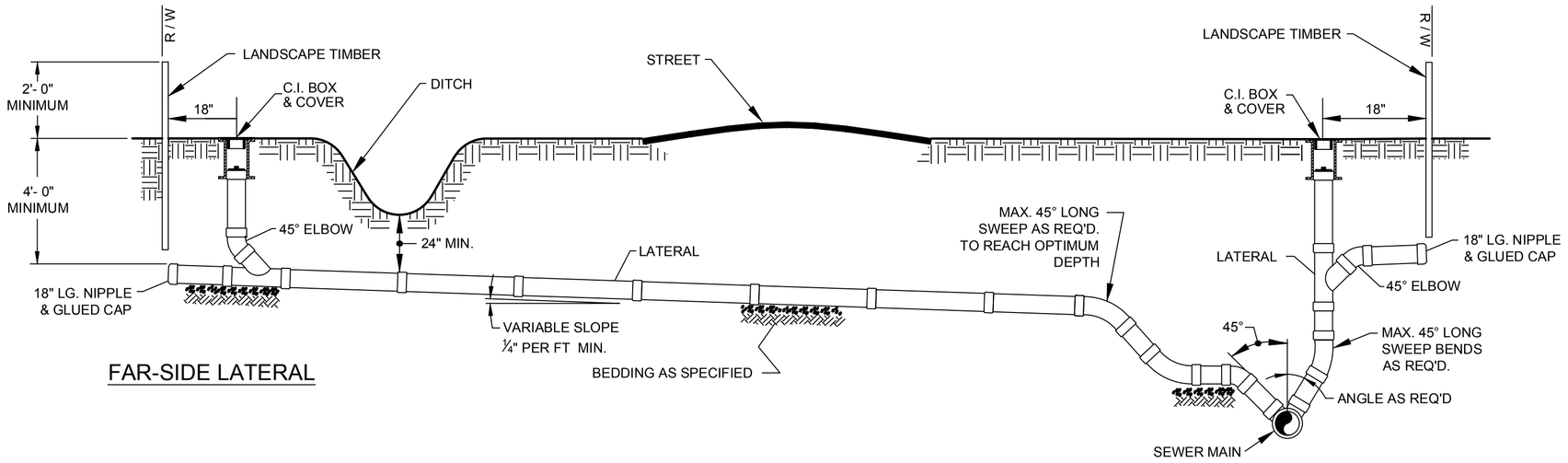

FAR-SIDE LATERAL

NEAR-SIDE LATERAL
WITH RIGHT-OF-WAY RESTRICTIONS

NOTE: FOR PRIVATE 8" SERVICES, MANHOLES ARE REQUIRED FOR TIE–IN TO MAIN

STANDARD SERVICE CONNECTION TO SANITARY SEWER

NOT TO SCALE

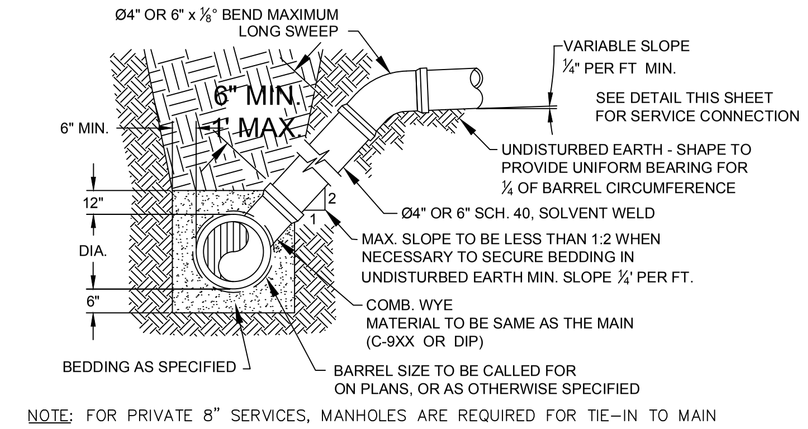

NOTE: FOR PRIVATE 8" SERVICES, MANHOLES ARE REQUIRED FOR TIE–IN TO MAIN

STANDARD SERVICE LATERAL

(MAIN DEPTH LESS THAN 8ft)

NOT TO SCALE

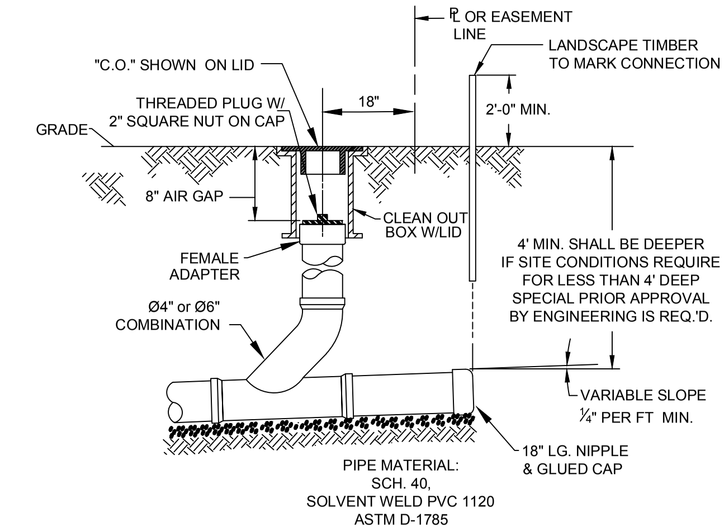

NOTE: FOR PRIVATE 8" SERVICES, MANHOLES ARE REQUIRED FOR TIE–IN TO MAIN

SERVICE CONNECTION & CLEAN-OUT

NOT TO SCALE

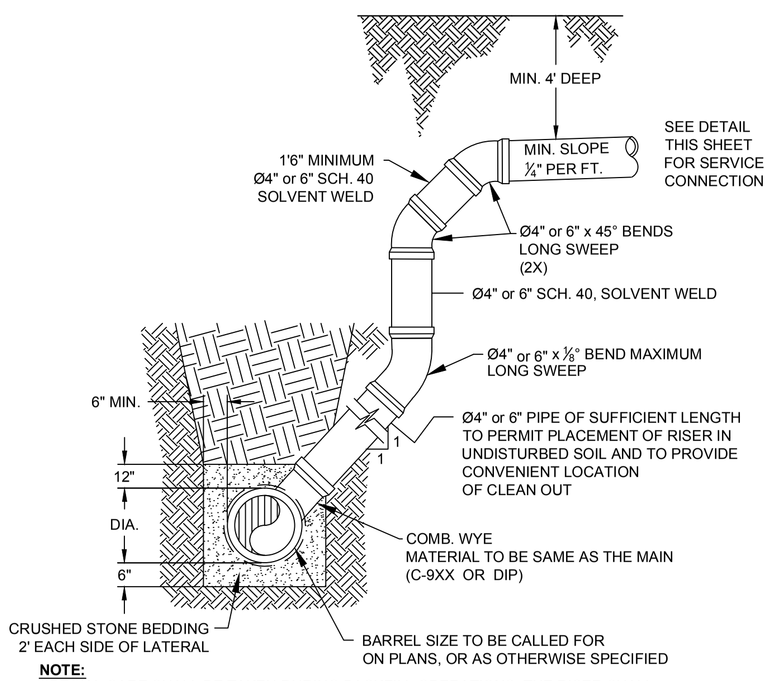

NOTE:
SPECIAL CARE SHALL BE TAKEN DURING BACKFILL OPERATIONS. THE RISER SHALL BE PLUMB AND TRUE AT ALL TIMES, AND REST ON FIRM, STABLE FOUNDATION.

FOR PRIVATE 8" SERVICES, MANHOLES ARE REQUIRED FOR TIE–IN TO MAIN

DEEP SERVICE LATERAL

(MAIN DEPTH GREATER THAN 8ft)

NOT TO SCALE

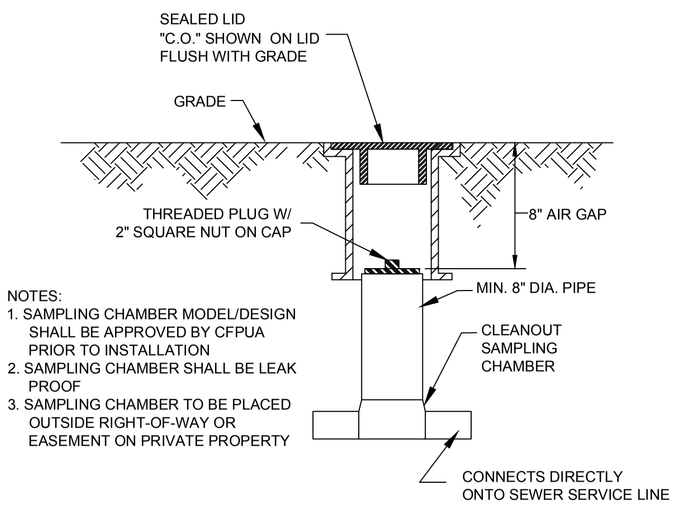

NOTES:
1. SAMPLING CHAMBER MODEL/DESIGN SHALL BE APPROVED BY CFPUA PRIOR TO INSTALLATION
2. SAMPLING CHAMBER SHALL BE LEAK PROOF
3. SAMPLING CHAMBER TO BE PLACED OUTSIDE RIGHT-OF-WAY OR EASEMENT ON PRIVATE PROPERTY

SAMPLING CHAMBER

NOT TO SCALE

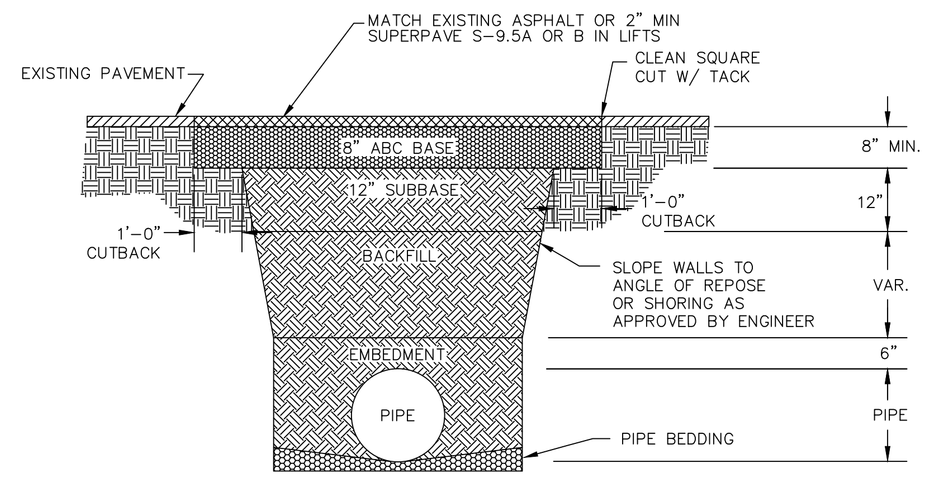

NOTES:
1. BACKFILL SHALL BE SUITABLE MATERIAL THAT IS FREE FROM HEAVY CLAY, GUMBOS, DEBRIS, ORGANICS AND LITTLE TO NO EXCESSIVE MOISTURE.
2. SELECT BACKFILL MAY BE SUBSTITUTED OR REQUIRED BY CITY TO ACHIEVE COMPACTION, (I.E. #57, ABC, CRUSHED LIMESTONE, CLEAN SAND, FLOWABLE FILL, ETC).
3. 8–INCH OF ABC BASE MATERIAL SHALL BE USED ON CITY STREETS.
4. BACKFILL AND BASE MATERIALS SHALL BE COMPACTED 12" MINIMUM LIFTS
5. SOIL SHALL BE COMPACTED BY A MECHANIZED TAMPER (I.E JUMPING JACK), HOWEVER, VIBRATORY ROLLERS > 18" WIDTH MAY BE USED FOR LARGER EXCAVATIONS. THE PLATE TAMP METHOD SHALL NOT BE USED.
6. ALL APPROVED CASTINGS SHALL BE SET FLUSH TO GRADE AND SUPPORTED IF APPLICABLE.
7. ABC BASE AND SUBBASE COMPACTED TO 98% AND BACKFILL AND EMBEDMENT COMPACTED TO 90% AS DETERMINED BY THE MODIFIED PROCTOR AASHTO METHOD T–99.
8. 1–FOOT CUTBACKS OF ASPHALT SHALL BE PREPARED ON UNDISTURBED SOIL. MINIMUM ASPHALT DENSITY IS 90%.

PAVEMENT REPAIR WHERE PIPE INSTALLED

(FOR PRIVATE ROADS AND PAVED AREAS;
CONTRACTOR TO MEET MIN. REQUIREMENTS AS DEFINED BY
RIGHT-OF-WAY OWNER FOR PUBLIC ROAD REPAIRS)

NOT TO SCALE

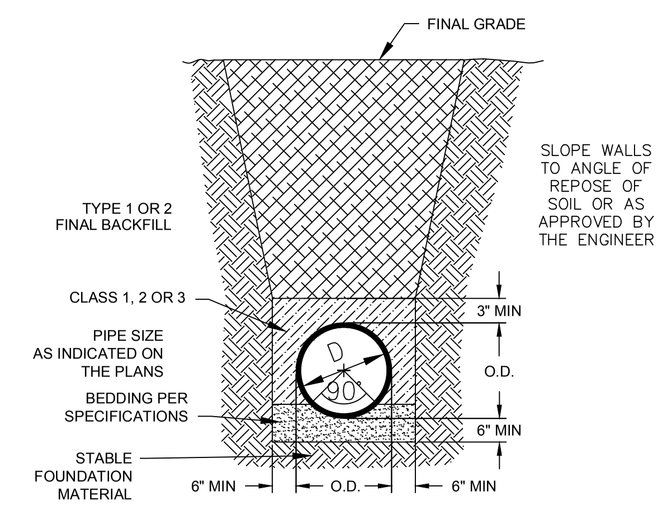

CL 50 DUCTILE IRON
DR 18 PVC
PIPE TRENCH DETAIL

NOT TO SCALE

NOTE:
PAVEMENT WIDTH AND LOCATION IN R/W VARIES. SEE PLAN FOR INDIVIDUAL LOCATION.

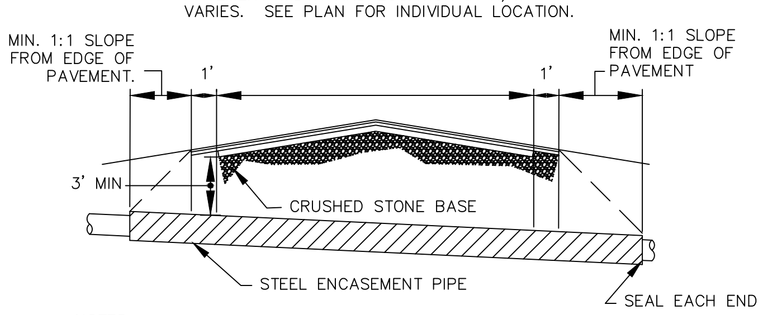

NOTES:
1. CASING WILL BE INSTALLED AT LINE AND GRADE SHOWN ON INDIVIDUAL PROFILE FOR EACH CROSSING. BORING/JACKING TO LINE AND GRADE IS REQUIRED.
2. TRACER WIRE SHALL BE CONTINUED THROUGH CASING

TYPICAL BORING/JACKING DETAIL

NOT TO SCALE

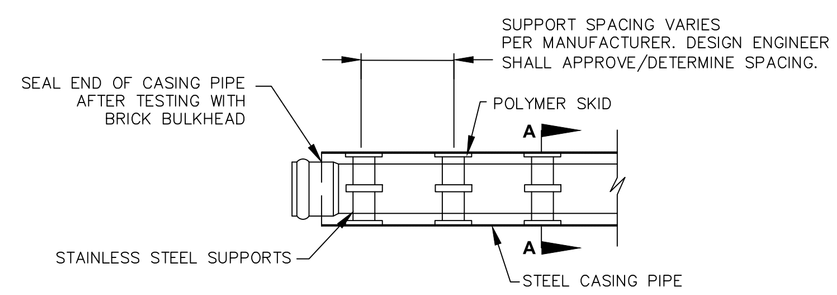

NOTE: PIPE SUPPORT TO BE PLACED TO PROVIDE PROPER SUPPORT, ALIGNMENT, AND GRADE AS SPECIFIED. CONTINUOUS SUPPORTS MAY BE USED AS ALTERNATIVE. OIL, GREASE, OR PETROLEUM PRODUCT MAY NOT BE USED AS LUBRICANT.

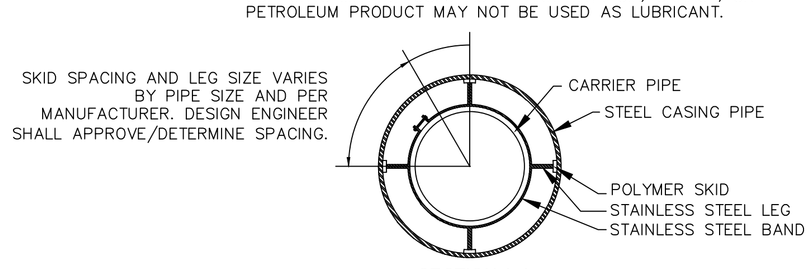

SECTION A-A

NOT TO SCALE

PIPE CASING SUPPORT DETAIL

NOT TO SCALE

GENERAL NOTES:

1. NO EXCAVATED MATERIAL SHALL BE PLACED IN ANY STREAM, DITCH OR DRAINAGE-WAY.
2. THE CONTRACTOR IS RESPONSIBLE FOR LOCATING ALL UNDERGROUND UTILITIES BEFORE ANY CONSTRUCTION BEGINS.
3. THE CONTRACTOR IS RESPONSIBLE FOR TEMPORARY SEDIMENT AND EROSION CONTROL MEASURES WHILE CONSTRUCTION IS IN PROGRESS.
4. THE CONTRACTOR IS RESPONSIBLE FOR STABILIZATION OF ALL DISTURBED AREAS.
5. THE CONTRACTOR IS RESPONSIBLE FOR LAY DOWN & STOCKPILE AREAS (TO ARRANGE AND INSURE COMPLIANCE WITH ALL LOCAL AND STATE REGULATIONS).

THE DETAILS SHOWN HEREON SUPERCEDE CFPUA WRITTEN TECHNICAL SPECIFICATIONS VERSIONS 1.00 - 1.04

REV:	DESCRIPTION:	DATE:

SANITARY SEWER STANDARD DETAILS

SANITARY SEWER STANDARD DETAILS
SS-2

CAPE FEAR PUBLIC UTILITY AUTHORITY
235 GOVERNMENT CENTER DRIVE
WILMINGTON, NC 28403
OFFICE: (910)332-6560
Stewardship. Sustainability. Service.

DATE: 1/9/12
SCALE: N/A
DRAWN BY: CFPUA
CHECKED BY: CFPUA
PROJECT NO. :

SHEET NO: 2 / 4

R:\Engineers\Design\cad files for details\Standard Details\CFPUA Standard Details\CFPUA-Sewer Details.dwg, 1/9/2012 5:00:11 PM, 1:1

VICINITY MAP
N.T.S.

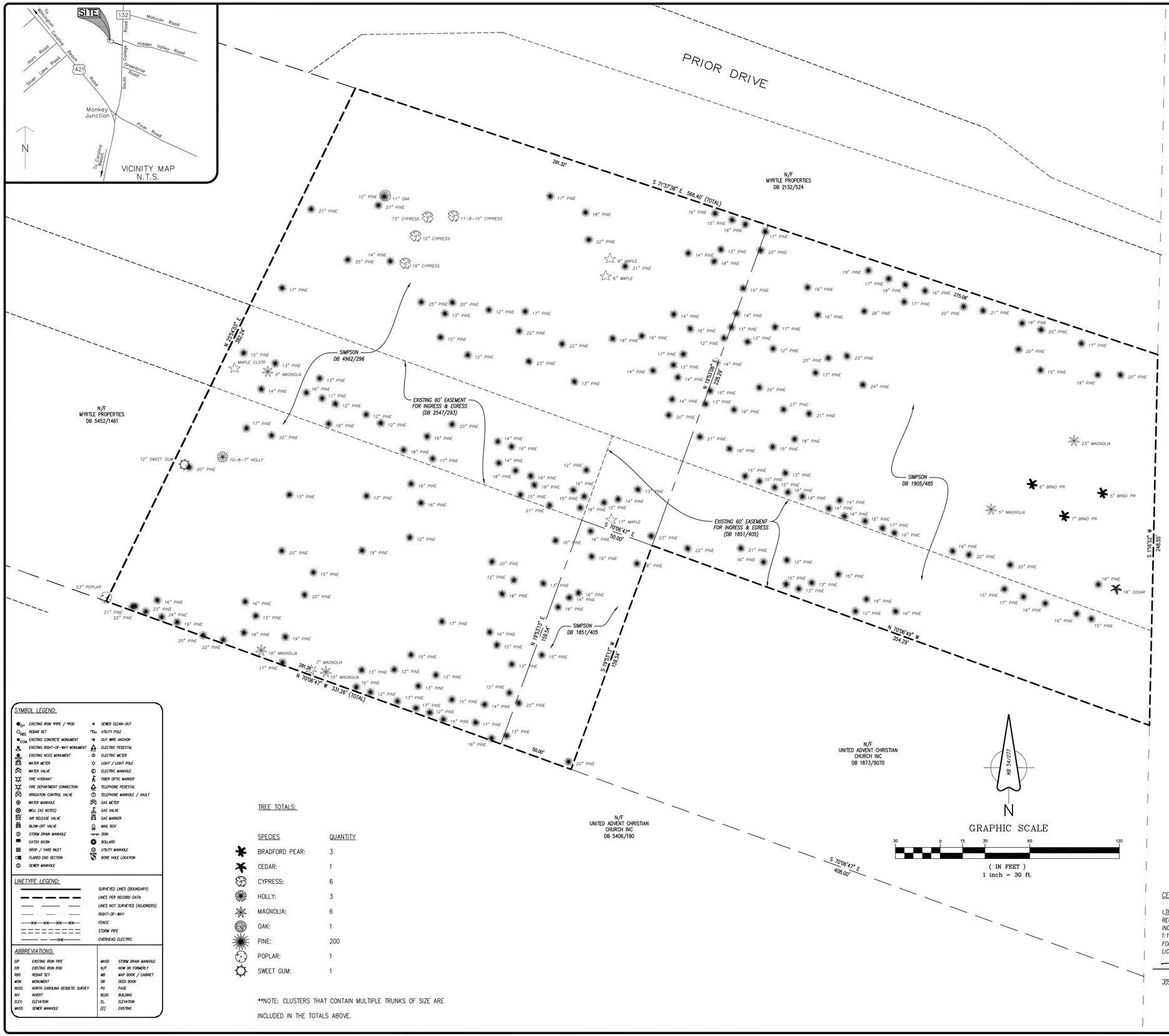

GENERAL NOTES

1. THIS IS A TREE LOCATION SURVEY ONLY. NO BOUNDARY SURVEY WAS PERFORMED. BOUNDARY INFORMATION WAS PLOTTED FROM RECORD INFORMATION, AS NOTED AND ROTATED TO MB 54/277.
2. BASIS OF BEARINGS FOR THIS MAP/PLAT ARE BASED ON MB 54/277.
3. ALL DISTANCES ARE HORIZONTAL GROUND DISTANCES UNLESS OTHERWISE NOTED.
4. UNITS ARE U.S. SURVEY FEET UNLESS OTHERWISE NOTED.
5. AREA BY COORDINATE GEOMETRY.
6. THIS SURVEY PERFORMED AND MAP PREPARED WITHOUT BENEFIT OF A TITLE REPORT. THIS SURVEY SUBJECT TO ANY FACTS AND EASEMENTS WHICH MAY BE DISCLOSED BY A FULL AND ACCURATE TITLE SEARCH.
7. FLOOD NOTE: AS DETERMINED BY GRAPHIC PLOTTING, THIS PROPERTY DOES NOT APPEAR TO BE LOCATED IN A SPECIAL FLOOD HAZARD ZONE PER FEMA FLOOD INSURANCE RATE MAP # 3701681341, EFFECTIVE DATE APRIL 3, 2006.
8. UTILITY STATEMENT: NO UTILITIES, ABOVE OR BELOW GROUND WERE RESEARCHED, SEARCHED FOR, OR LOCATED FOR THIS SURVEY. THIS IF FOR TREE LOCATION ONLY.
9. MAP & DEED REFERENCES (PER NEW HANOVER COUNTY REGISTRY):
   DB 1905/485 DB 4962/296 DB 1851/405
   (AND OTHERS THAT MAY BE SHOWN ON THIS MAP)

SYMBOL LEGEND:

EIP	EXISTING IRON PIPE / MKD		SEWER CLEAN-OUT
RBS	REBAR SET		UTILITY POLE
ECM	EXISTING CONCRETE MONUMENT		GUY WIRE ANCHOR
	EXISTING RIGHT-OF-WAY MONUMENT		ELECTRIC PEDESTAL
	EXISTING NCGS MONUMENT		ELECTRIC METER
	WATER METER		LIGHT / LIGHT POLE
	WATER VALVE		ELECTRIC MANHOLE
	FIRE HYDRANT		FIBER OPTIC MARKER
	FIRE DEPARTMENT CONNECTION		TELEPHONE PEDESTAL
	IRRIGATION CONTROL VALVE		TELEPHONE MANHOLE / VAULT
	WATER MANHOLE		GAS METER
	WELL (AS NOTED)		GAS VALVE
	AIR RELEASE VALVE		GAS MARKER
	BLOW-OFF VALVE		MAIL BOX
	STORM DRAIN MANHOLE		SIGN
	CATCH BASIN		BOLLARD
	DROP / YARD INLET		UTILITY MANHOLE
	FLARED END SECTION		BORE HOLE LOCATION
	SEWER MANHOLE		

LINETYPE LEGEND:

	SURVEYED LINES (BOUNDARY)
	LINES PER RECORD DATA
	LINES NOT SURVEYED (ADJOINERS)
	RIGHT-OF-WAY
—XX—XX—XX—XX—	FENCE
	STORM PIPE
—OHE—	OVERHEAD ELECTRIC

ABBREVIATIONS:

EIP	EXISTING IRON PIPE	MHSD	STORM DRAIN MANHOLE
EIR	EXISTING IRON ROD	N/F	NOW OR FORMERLY
RBS	REBAR SET	MB	MAP BOOK / CABINET
MON	MONUMENT	DB	DEED BOOK
NCGS	NORTH CAROLINA GEODETIC SURVEY	PG	PAGE
INV	INVERT	BLDG	BUILDING
ELEV	ELEVATION	EL.	ELEVATION
MHSS	SEWER MANHOLE	[X]	EXISTING

TREE TOTALS:

SPECIES	QUANTITY
BRADFORD PEAR:	3
CEDAR:	1
CYPRESS:	6
HOLLY:	3
MAGNOLIA:	6
OAK:	1
PINE:	200
POPLAR:	1
SWEET GUM:	1

**NOTE: CLUSTERS THAT CONTAIN MULTIPLE TRUNKS OF SIZE ARE INCLUDED IN THE TOTALS ABOVE.

CERTIFICATE OF ACCURACY & MAPPING

I, THE UNDERSIGNED, CERTIFY THAT THIS SURVEY WAS DRAWN UNDER MY SUPERVISION ((DEED DESCRIPTION RECORDED IN BOOK ___AS___, PAGE ___NOTED___); THAT THE BOUNDARIES NOT SURVEYED ARE CLEARLY INDICATED AS DRAWN FROM INFORMATION AS LABELED; THAT THE RATIO OF PRECISION, AS CALCULATED, IS 1:10,000+; AND THAT THIS SURVEY HAS BEEN PREPARED IN ACCORDANCE WITH THE STANDARDS OF PRACTICE FOR LAND SURVEYING IN NORTH CAROLINA (TITLE 21, CH. 56, SEC. 1600). WITNESS MY ORIGINAL SIGNATURE, LICENSE NUMBER AND SEAL THIS ___13th___ DAY OF ___JANUARY___, 20 12 .

1/13/12

JOSEPH A. ROMEO – PROFESSIONAL LAND SURVEYOR (L-4937)

NORTH CAROLINA PROFESSIONAL SEAL L-4937 LAND SURVEYOR JOSEPH A. ROMEO

No.	Revision	Date	By

Designer	Scale NOTED
Drawn By J. Romeo	Date 1/11/2012
Checked By ACS	Job No. 11-1068

Sheet No. 1 of 1

PREPARED FOR:
SNW, LLP
972 TRINITY ROAD
RALEIGH, NC 27607

TREE LOCATION SURVEY

SIMPSON PROPERTIES

Masonboro Township New Hanover County North Carolina

ATLANTIC COAST SURVEY, PLLC
P-0822
PO Box 12588 Wilmington, NC 28405
(910) 443-0080 www.atlanticcoastsurvey.com