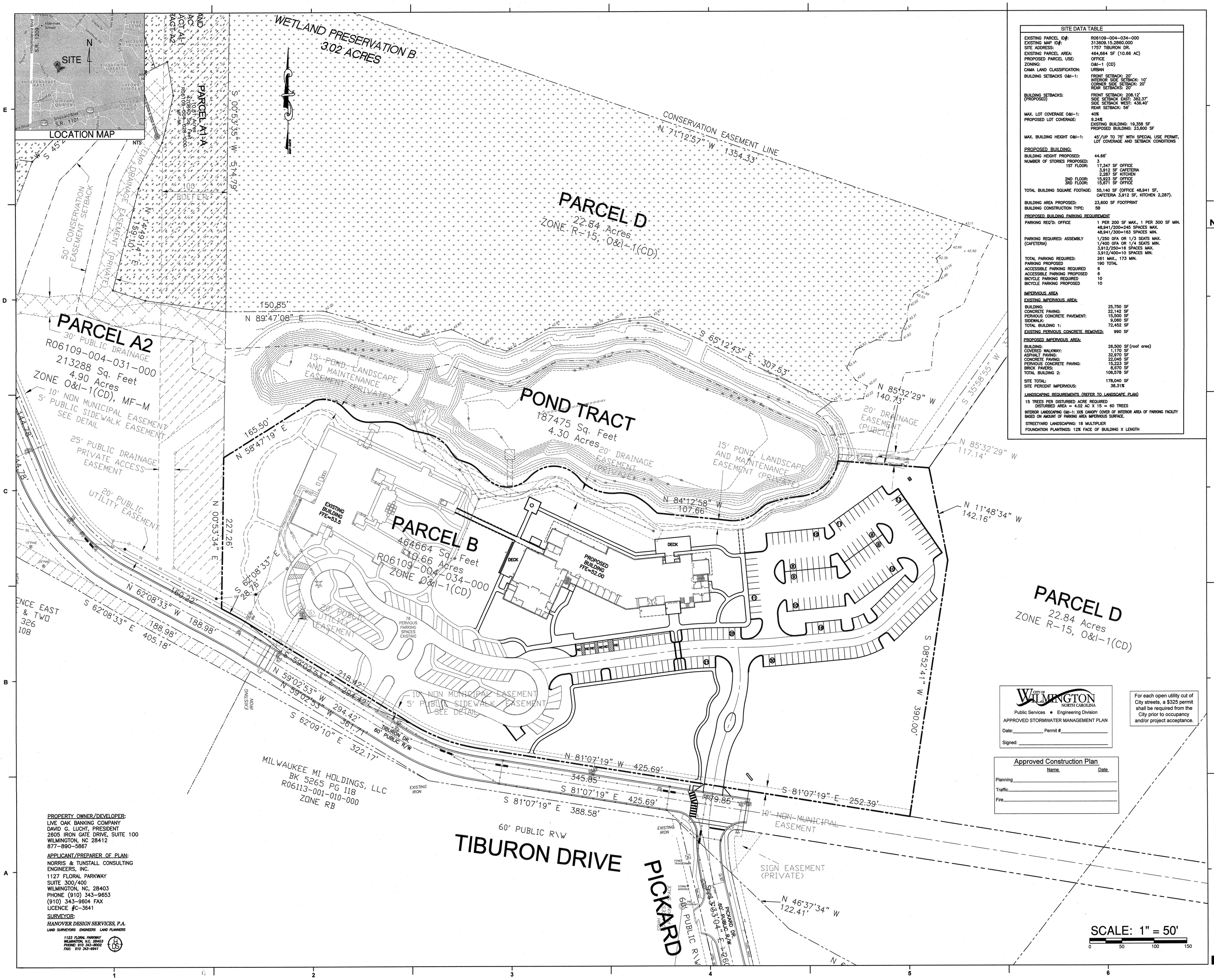

SITE DATA TABLE	
EXISTING PARCEL ID#:	R06109-004-034-000
EXISTING MAP ID#:	313609.15.2860.000
SITE ADDRESS:	1757 TIBURON DR.
EXISTING PARCEL AREA:	464,664 SF (10.66 AC)
PROPOSED PARCEL USE:	OFFICE
ZONING:	O&I-1 (CD)
CAMA LAND CLASSIFICATION:	URBAN
BUILDING SETBACKS O&I-1:	FRONT SETBACK: 20' INTERIOR SIDE SETBACK: 10' CORNER SIDE SETBACK: 20' REAR SETBACKS: 20'
BUILDING SETBACKS: (PROPOSED)	FRONT SETBACK: 208.12' SIDE SETBACK EAST: 362.37' SIDE SETBACK WEST: 436.40' REAR SETBACK: 58'
MAX. LOT COVERAGE O&I-1:	40%
PROPOSED LOT COVERAGE:	9.24% EXISTING BUILDING: 19,358 SF PROPOSED BUILDING: 23,600 SF
MAX. BUILDING HEIGHT O&I-1:	45'/UP TO 75' WITH SPECIAL USE PERMIT, LOT COVERAGE AND SETBACK CONDITIONS
PROPOSED BUILDING:	
BUILDING HEIGHT PROPOSED:	44.66'
NUMBER OF STORIES PROPOSED:	3
1ST FLOOR:	17,347 SF OFFICE 3,912 SF CAFETERIA 2,287 SF KITCHEN
2ND FLOOR:	15,923 SF OFFICE
3RD FLOOR:	15,671 SF OFFICE
TOTAL BUILDING SQUARE FOOTAGE:	55,140 SF (OFFICE 48,941 SF, CAFETERIA 3,912 SF, KITCHEN 2,287).
BUILDING AREA PROPOSED:	23,600 SF FOOTPRINT
BUILDING CONSTRUCTION TYPE:	5B
PROPOSED BUILDING PARKING REQUIREMENT	
PARKING REQ'D: OFFICE	1 PER 200 SF MAX., 1 PER 300 SF MIN. 48,941/200=245 SPACES MAX. 48,941/300=163 SPACES MIN.
PARKING REQUIRED: ASSEMBLY (CAFETERIA)	1/250 GFA OR 1/3 SEATS MAX. 1/400 GFA OR 1/4 SEATS MIN. 3,912/250=16 SPACES MAX. 3,912/400=10 SPACES MIN.
TOTAL PARKING REQUIRED:	261 MAX., 173 MIN.
PARKING PROPOSED	190 TOTAL
ACCESSIBLE PARKING REQUIRED	6
ACCESSIBLE PARKING PROPOSED	6
BICYCLE PARKING REQUIRED	10
BICYCLE PARKING PROPOSED	10
IMPERVIOUS AREA	
EXISTING IMPERVIOUS AREA:	
BUILDING:	25,750 SF
CONCRETE PAVING:	22,142 SF
PERVIOUS CONCRETE PAVEMENT:	15,500 SF
SIDEWALK:	9,060 SF
TOTAL BUILDING 1:	72,452 SF
EXISTING PERVIOUS CONCRETE REMOVED:	990 SF
PROPOSED IMPERVIOUS AREA:	
BUILDING:	26,500 SF (roof area)
COVERED WALKWAY:	1,170 SF
ASPHALT PAVING:	32,970 SF
CONCRETE PAVING:	22,045 SF
PERVIOUS CONCRETE PAVING:	15,223 SF
BRICK PAVERS:	8,570 SF
TOTAL BUILDING 2:	106,578 SF
SITE TOTAL:	178,040 SF
SITE PERCENT IMPERVIOUS:	38.31%

LANDSCAPING REQUIREMENTS (REFER TO LANDSCAPE PLAN)

15 TREES PER DISTURBED ACRE REQUIRED
DISTURBED AREA = 4.02 AC X 15 = 60 TREES

INTERIOR LANDSCAPING O&I-1: XXX CANOPY COVER OF INTERIOR AREA OF PARKING FACILITY BASED ON AMOUNT OF PARKING AREA IMPERVIOUS SURFACE.

STREETYARD LANDSCAPING: 18 MULTIPLIER

FOUNDATION PLANTINGS: 12% FACE OF BUILDING X LENGTH

PROPERTY OWNER/DEVELOPER:
LIVE OAK BANKING COMPANY
DAVID G. LUCHT, PRESIDENT
2605 IRON GATE DRIVE, SUITE 100
WILMINGTON, NC 28412
877-890-5867

APPLICANT/PREPARER OF PLAN:
NORRIS & TUNSTALL CONSULTING ENGINEERS, INC.
1127 FLORAL PARKWAY
SUITE 300/400
WILMINGTON, NC, 28403
PHONE (910) 343-9653
(910) 343-9604 FAX
LICENCE #C-3641

SURVEYOR:
HANOVER DESIGN SERVICES, P.A.
LAND SURVEYORS ENGINEERS LAND PLANNERS
1123 FLORAL PARKWAY
WILMINGTON, N.C. 28403
PHONE: 910 343-8002
FAX: 910 343-9941

CITY OF WILMINGTON NORTH CAROLINA
Public Services • Engineering Division
APPROVED STORMWATER MANAGEMENT PLAN
Date:_____ Permit #_____
Signed: _____

For each open utility cut of City streets, a $325 permit shall be required from the City prior to occupancy and/or project acceptance.

Approved Construction Plan

	Name	Date
Planning		
Traffic		
Fire		

LIVE OAK BANK

LIVE OAK BANK nCINO SOFTWARE COMPANY BUILDING 2

NORRIS & TUNSTALL CONSULTING ENGINEERS, P.C.
1127 FLORAL PARKWAY SUITE 400
WILMINGTON, NC 28403
PHONE (910) 343-9653
FAX (910) 343-9604
office@nkteng.com
licence #C-3641

LS3P

2528 INDEPENDENCE BLVD. SUITE 200
WILMINGTON, NORTH CAROLINA 28412
TEL. 910.790.9901 FAX 910.790.3111
WWW.LS3P.COM

NORTH CAROLINA REGISTERED PROFESSIONAL SEAL 19851 ENGINEER JOHN S. TUNSTALL

MEMBERS OF THE AMERICAN INSTITUTE OF ARCHITEC

COPYRIGHT 2013 ALL RIGHTS RESERVED
PRINTED OR ELECTRONIC DRAWINGS AND DOCUMENTATION MAY NOT BE REPRODUCED IN ANY FORM WITHOUT WRITTEN PERMISSION FROM LS3P ASSOCIATES LTD.

REVISIONS:

No.	Description	Date

PROJECT: 7101-126230
DATE: 16 NOV 2013
DRAWN BY: Author
CHECKED BY: Checker

OVERALL SITE PLAN

C0

NT #13015

PERMIT SET

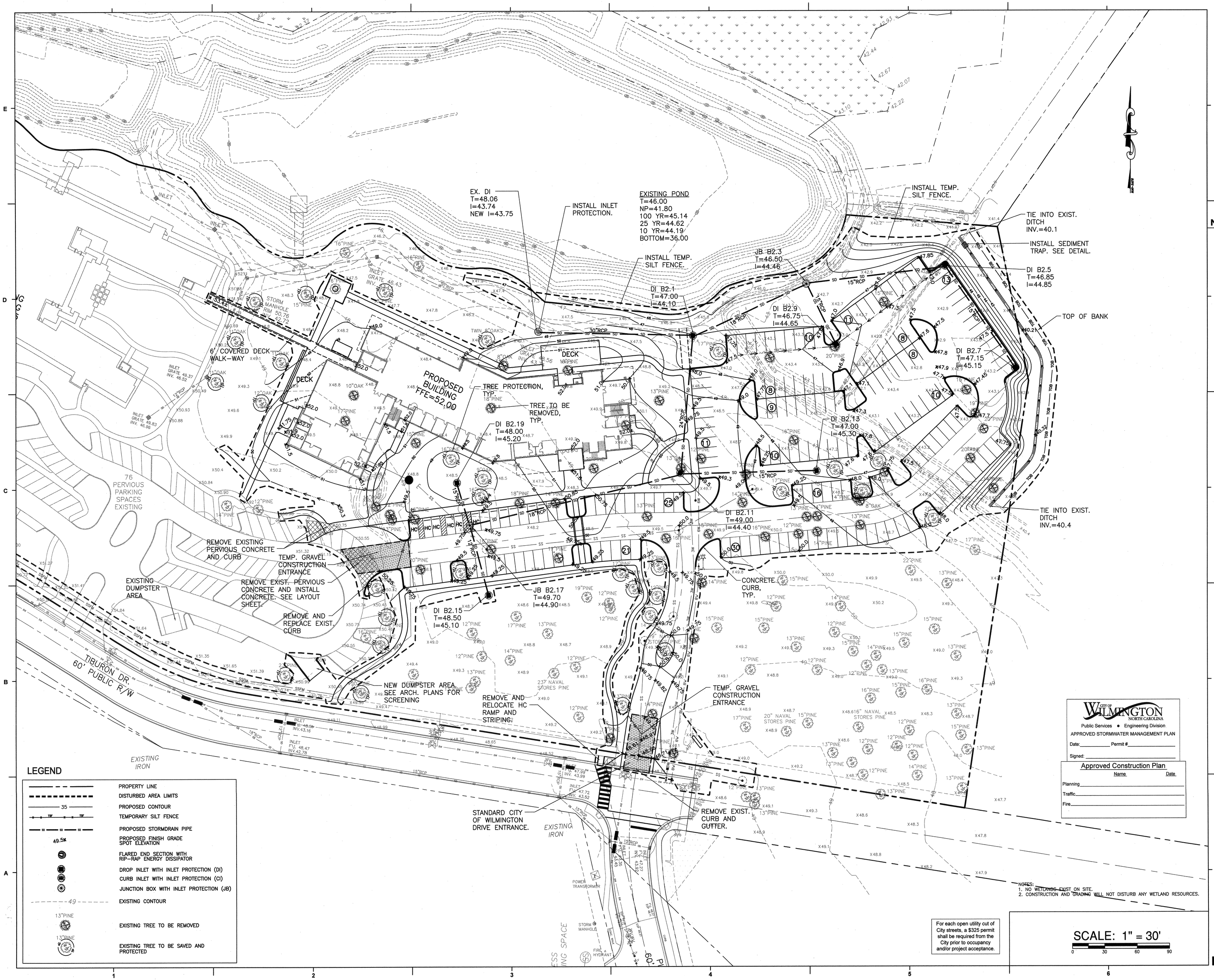

LEGEND

- PROPERTY LINE
- DISTURBED AREA LIMITS
- 35 — PROPOSED CONTOUR
- TSF — TEMPORARY SILT FENCE
- 50 — PROPOSED STORMDRAIN PIPE
- 49.5x — PROPOSED FINISH GRADE SPOT ELEVATION
- FLARED END SECTION WITH RIP-RAP ENERGY DISSIPATOR
- DROP INLET WITH INLET PROTECTION (DI)
- CURB INLET WITH INLET PROTECTION (CI)
- JUNCTION BOX WITH INLET PROTECTION (JB)
- 49 — EXISTING CONTOUR
- 13"PINE — EXISTING TREE TO BE REMOVED
- 13"PINE — EXISTING TREE TO BE SAVED AND PROTECTED

CITY OF WILMINGTON NORTH CAROLINA
Public Services • Engineering Division
APPROVED STORMWATER MANAGEMENT PLAN
Date:_____ Permit #_____
Signed: _____

Approved Construction Plan

	Name	Date
Planning		
Traffic		
Fire		

For each open utility cut of City streets, a $325 permit shall be required from the City prior to occupancy and/or project acceptance.

SCALE: 1" = 30'
0 30 60 90

NOTES:
1. NO WETLANDS EXIST ON SITE.
2. CONSTRUCTION AND GRADING WILL NOT DISTURB ANY WETLAND RESOURCES.

LIVE OAK BANK

LIVE OAK BANK nCINO SOFTWARE COMPANY BUILDING 2

NORRIS & TUNSTALL CONSULTING ENGINEERS, P.C.
1127 FLORAL PARKWAY SUITE 400
WILMINGTON, NC 28403
PHONE (910) 343-9653
FAX (910) 343-9604
office@nkteng.com
licence #C-3641

LS3P
2528 INDEPENDENCE BLVD. SUITE 200
WILMINGTON, NORTH CAROLINA 28412
TEL. 910.790.9901 FAX 910.790.3111
WWW.LS3P.COM

NORTH CAROLINA PROFESSIONAL SEAL 19651 ENGINEER JOHN S. TUNSTALL

MEMBERS OF THE AMERICAN INSTITUTE OF ARCHITEC

COPYRIGHT 2013 ALL RIGHTS RESERVED
PRINTED OR ELECTRONIC DRAWINGS AND DOCUMENTATION MAY NOT BE REPRODUCED IN ANY FORM WITHOUT WRITTEN PERMISSION FROM LS3P ASSOCIATES LTD.

REVISIONS:

No.	Description	Date

PROJECT: 7101-126230
DATE: 16 NOV 2013
DRAWN BY: Author
CHECKED BY: Checker

GRADING, DRAINAGE AND EROSION CONTROL PLAN

C1

NT #13015

PERMIT SET

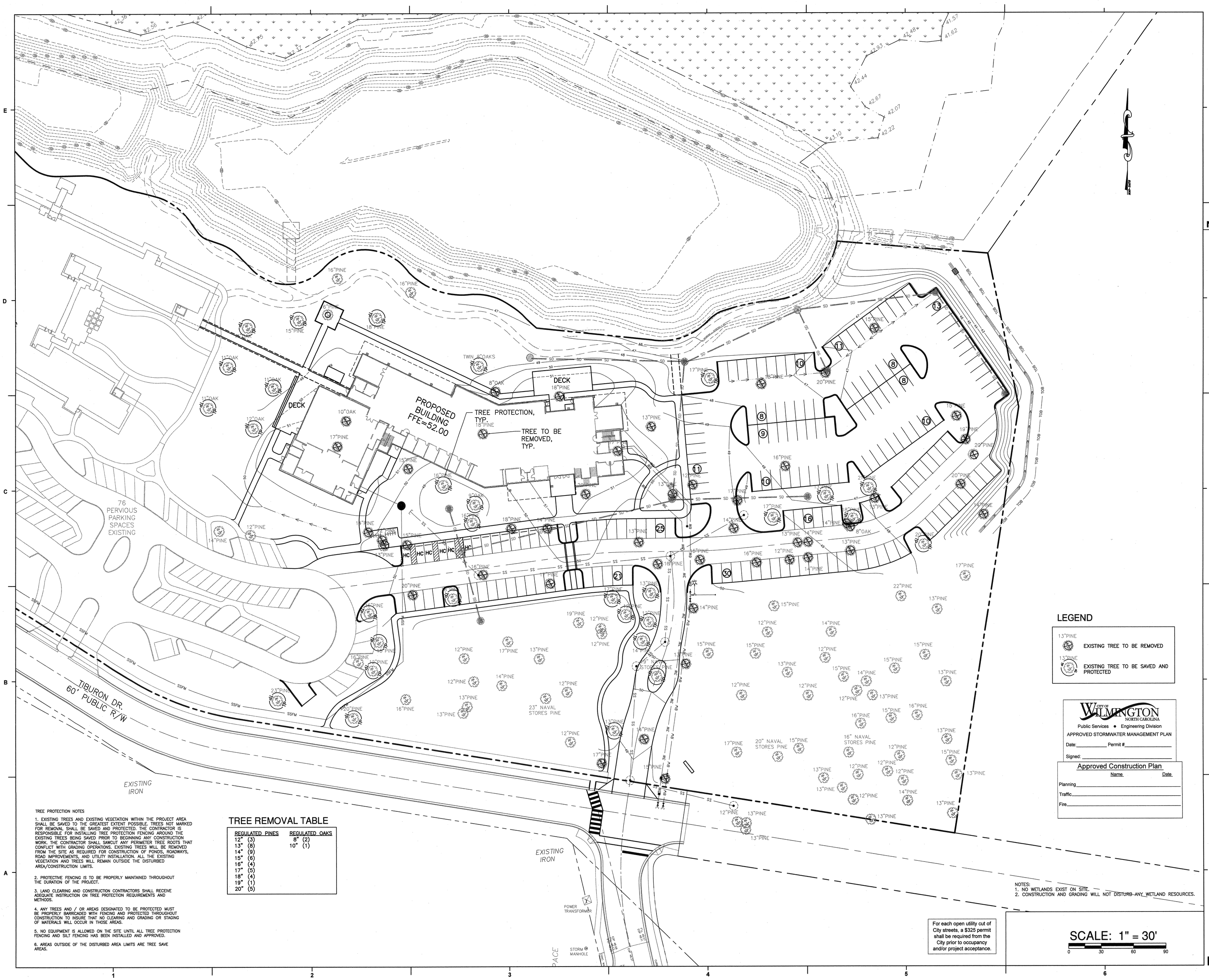

LEGEND

13"PINE — EXISTING TREE TO BE REMOVED

13"PINE — EXISTING TREE TO BE SAVED AND PROTECTED

TREE PROTECTION NOTES

1. EXISTING TREES AND EXISTING VEGETATION WITHIN THE PROJECT AREA SHALL BE SAVED TO THE GREATEST EXTENT POSSIBLE. TREES NOT MARKED FOR REMOVAL SHALL BE SAVED AND PROTECTED. THE CONTRACTOR IS RESPONSIBLE FOR INSTALLING TREE PROTECTION FENCING AROUND THE EXISTING TREES BEING SAVED PRIOR TO BEGINNING ANY CONSTRUCTION WORK. THE CONTRACTOR SHALL SAWCUT ANY PERIMETER TREE ROOTS THAT CONFLICT WITH GRADING OPERATIONS. EXISTING TREES WILL BE REMOVED FROM THE SITE AS REQUIRED FOR CONSTRUCTION OF PONDS, ROADWAYS, ROAD IMPROVEMENTS, AND UTILITY INSTALLATION. ALL THE EXISTING VEGETATION AND TREES WILL REMAIN OUTSIDE THE DISTURBED AREA/CONSTRUCTION LIMITS.

2. PROTECTIVE FENCING IS TO BE PROPERLY MAINTAINED THROUGHOUT THE DURATION OF THE PROJECT.

3. LAND CLEARING AND CONSTRUCTION CONTRACTORS SHALL RECEIVE ADEQUATE INSTRUCTION ON TREE PROTECTION REQUIREMENTS AND METHODS.

4. ANY TREES AND / OR AREAS DESIGNATED TO BE PROTECTED MUST BE PROPERLY BARRICADED WITH FENCING AND PROTECTED THROUGHOUT CONSTRUCTION TO INSURE THAT NO CLEARING AND GRADING OR STAGING OF MATERIALS WILL OCCUR IN THOSE AREAS.

5. NO EQUIPMENT IS ALLOWED ON THE SITE UNTIL ALL TREE PROTECTION FENCING AND SILT FENCING HAS BEEN INSTALLED AND APPROVED.

6. AREAS OUTSIDE OF THE DISTURBED AREA LIMITS ARE TREE SAVE AREAS.

TREE REMOVAL TABLE

REGULATED PINES	REGULATED OAKS
12" (3)	8" (2)
13" (8)	10" (1)
14" (9)	
15" (6)	
16" (4)	
17" (5)	
18" (4)	
19" (1)	
20" (5)	

NOTES:
1. NO WETLANDS EXIST ON SITE.
2. CONSTRUCTION AND GRADING WILL NOT DISTURB ANY WETLAND RESOURCES.

For each open utility cut of City streets, a $325 permit shall be required from the City prior to occupancy and/or project acceptance.

SCALE: 1" = 30'

0 30 60 90

LIVE OAK BANK

LIVE OAK BANK
nCINO SOFTWARE COMPANY
BUILDING 2

NORRIS & TUNSTALL
CONSULTING ENGINEERS, P.C.
1127 FLORAL PARKWAY SUITE 400
WILMINGTON, NC 28403
PHONE (910) 343-9653
FAX (910) 343-9604
office@nkteng.com
licence #C-3641

LS3P

2528 INDEPENDENCE BLVD. SUITE 200
WILMINGTON, NORTH CAROLINA 28412
TEL. 910.790.9901 FAX 910.790.3111
WWW.LS3P.COM

NORTH CAROLINA PROFESSIONAL SEAL 19651 ENGINEER JOHN S. TUNSTALL

MEMBERS OF THE AMERICAN INSTITUTE OF ARCHITEC

COPYRIGHT 2013 ALL RIGHTS RESERVED
PRINTED OR ELECTRONIC DRAWINGS AND DOCUMENTATION MAY NOT BE REPRODUCED IN ANY FORM WITHOUT WRITTEN PERMISSION FROM LS3P ASSOCIATES LTD.

REVISIONS:

No.	Description	Date

CITY OF WILMINGTON NORTH CAROLINA
Public Services • Engineering Division
APPROVED STORMWATER MANAGEMENT PLAN
Date:_____ Permit #_____
Signed: _____

Approved Construction Plan

	Name	Date
Planning		
Traffic		
Fire		

PROJECT: 7101-126230
DATE: 16 NOV 2013
DRAWN BY: Author
CHECKED BY: Checker

TREE PLAN

C1.1

NT #13015

PERMIT SET

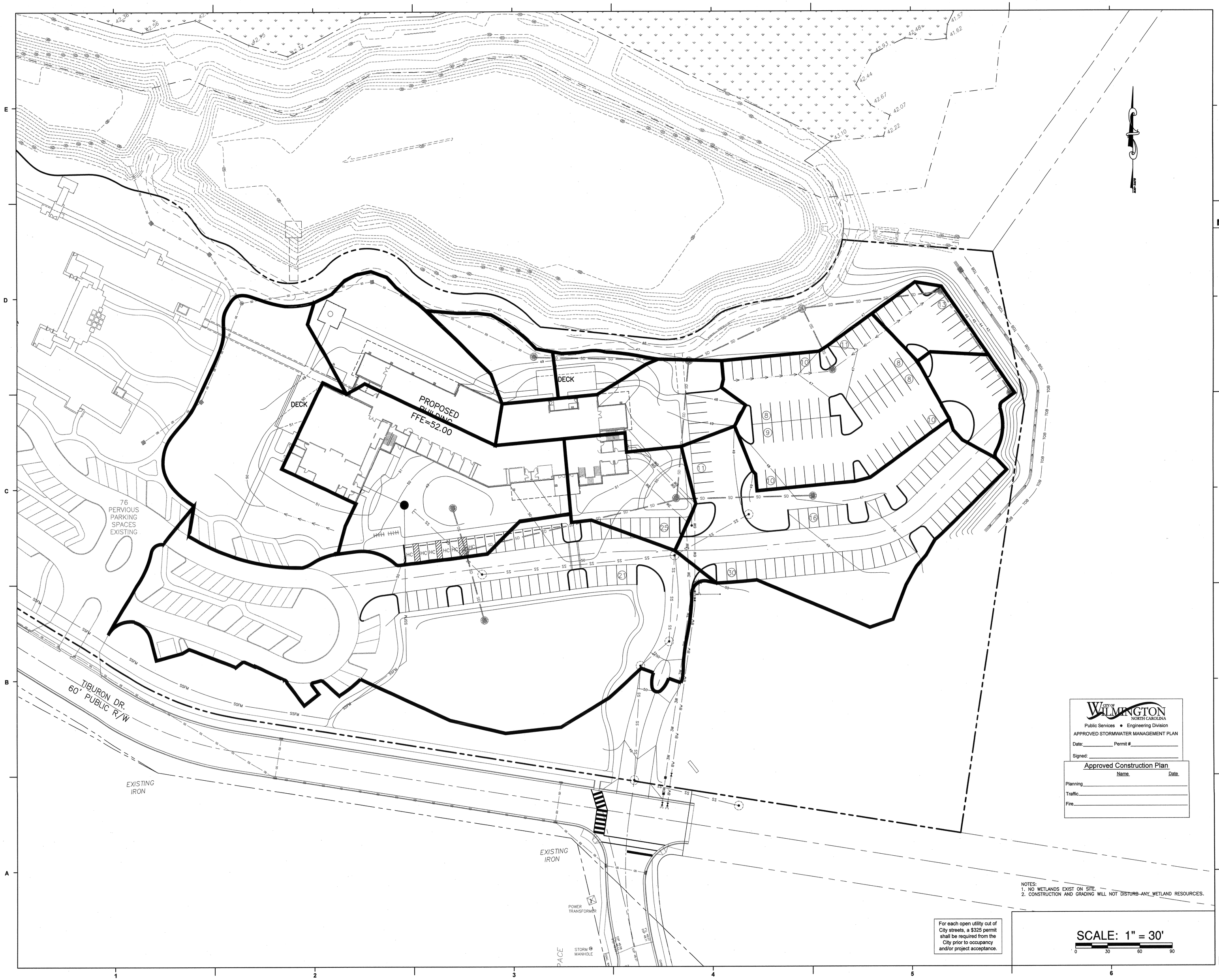

NOTES:
1. NO WETLANDS EXIST ON SITE.
2. CONSTRUCTION AND GRADING WILL NOT DISTURB ANY WETLAND RESOURCES.

For each open utility cut of City streets, a $325 permit shall be required from the City prior to occupancy and/or project acceptance.

LIVE OAK BANK

LIVE OAK BANK
nCINO SOFTWARE COMPANY
BUILDING 2

NORRIS & TUNSTALL
CONSULTING ENGINEERS, P.C.
1127 FLORAL PARKWAY SUITE 400
WILMINGTON, NC 28403
PHONE (910) 343-9653
FAX (910) 343-9604
office@nkteng.com
licence #C-3641

LS3P

2528 INDEPENDENCE BLVD. SUITE 200
WILMINGTON, NORTH CAROLINA 28412
TEL. 910.790.5901 FAX 910.790.3111
WWW.LS3P.COM

NORTH CAROLINA PROFESSIONAL SEAL 19851 ENGINEER NORRIS & TUNSTALL

MEMBERS OF THE AMERICAN INSTITUTE OF ARCHITEC

COPYRIGHT 2013 ALL RIGHTS RESERVED
PRINTED OR ELECTRONIC DRAWINGS AND DOCUMENTATION MAY NOT BE REPRODUCED IN ANY FORM WITHOUT WRITTEN PERMISSION FROM LS3P ASSOCIATES LTD.

REVISIONS:

No.	Description	Date

CITY OF WILMINGTON NORTH CAROLINA
Public Services • Engineering Division
APPROVED STORMWATER MANAGEMENT PLAN
Date:_____ Permit #_____
Signed: _____

Approved Construction Plan

	Name	Date
Planning		
Traffic		
Fire		

PROJECT: 7101-126230
DATE: 16 NOV 2013
DRAWN BY: Author
CHECKED BY: Checker

DRAINAGE AREA PLAN

C1.2

NT #13015

PERMIT SET

F:\Projects\2013\13015 Live Oak Bank - Phase 2\13015 Plans\dwg\13015.master-6.dwg, 11/7/2013 8:21:06 AM

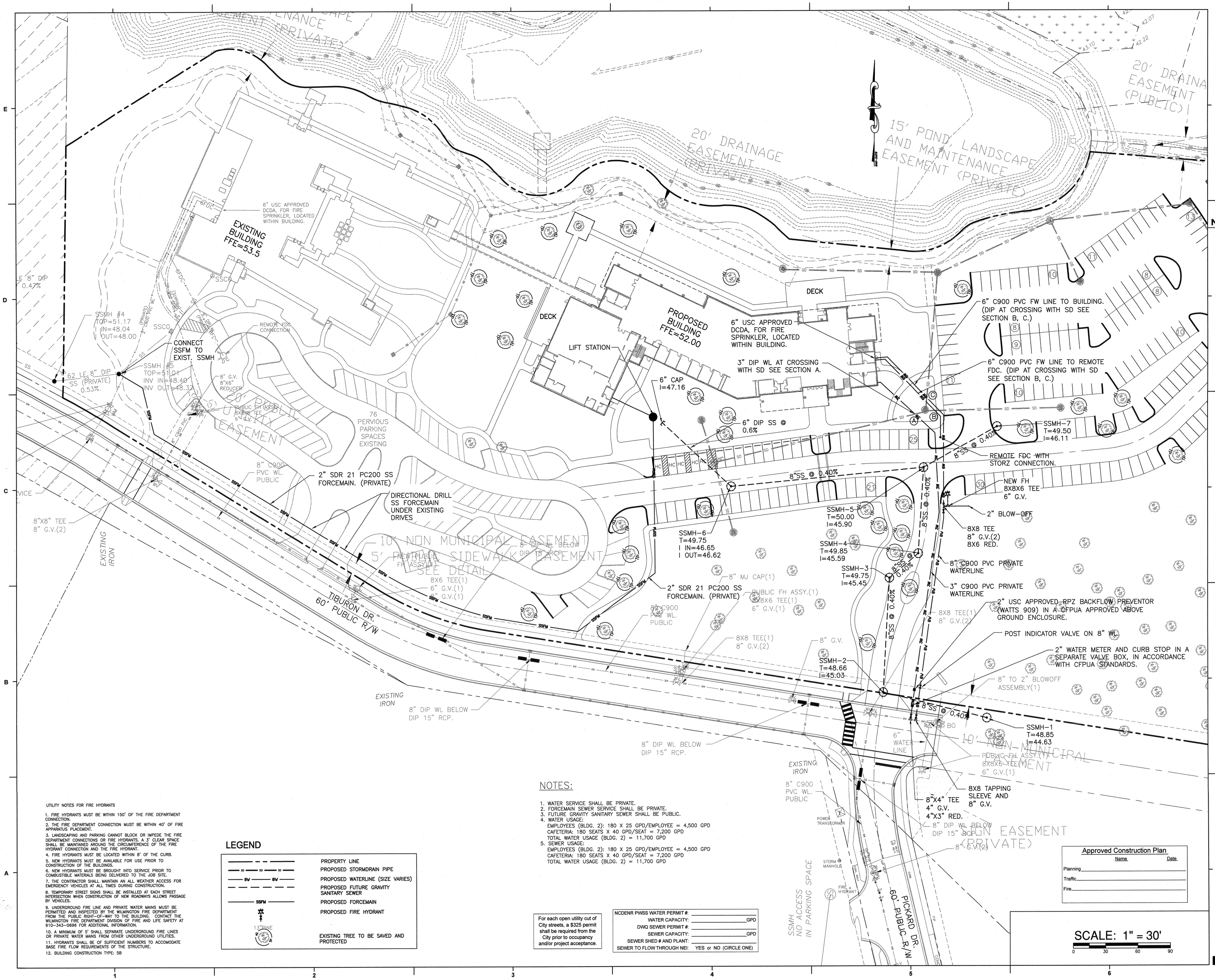

UTILITY NOTES FOR FIRE HYDRANTS

1. FIRE HYDRANTS MUST BE WITHIN 150' OF THE FIRE DEPARTMENT CONNECTION.
2. THE FIRE DEPARTMENT CONNECTION MUST BE WITHIN 40' OF FIRE APPARATUS PLACEMENT.
3. LANDSCAPING AND PARKING CANNOT BLOCK OR IMPEDE THE FIRE DEPARTMENT CONNECTIONS OR FIRE HYDRANTS. A 3' CLEAR SPACE SHALL BE MAINTAINED AROUND THE CIRCUMFERENCE OF THE FIRE HYDRANT CONNECTION AND THE FIRE HYDRANT.
4. FIRE HYDRANTS MUST BE LOCATED WITHIN 8' OF THE CURB.
5. NEW HYDRANTS MUST BE AVAILABLE FOR USE PRIOR TO CONSTRUCTION OF THE BUILDINGS.
6. NEW HYDRANTS MUST BE BROUGHT INTO SERVICE PRIOR TO COMBUSTIBLE MATERIALS BEING DELIVERED TO THE JOB SITE.
7. THE CONTRACTOR SHALL MAINTAIN AN ALL WEATHER ACCESS FOR EMERGENCY VEHICLES AT ALL TIMES DURING CONSTRUCTION.
8. TEMPORARY STREET SIGNS SHALL BE INSTALLED AT EACH STREET INTERSECTION WHEN CONSTRUCTION OF NEW ROADWAYS ALLOWS PASSAGE BY VEHICLES.
9. UNDERGROUND FIRE LINE AND PRIVATE WATER MAINS MUST BE PERMITTED AND INSPECTED BY THE WILMINGTON FIRE DEPARTMENT FROM THE PUBLIC RIGHT-OF-WAY TO THE BUILDING. CONTACT THE WILMINGTON FIRE DEPARTMENT DIVISION OF FIRE AND LIFE SAFETY AT 910-343-0696 FOR ADDITIONAL INFORMATION.
10. A MINIMUM OF 5' SHALL SEPARATE UNDERGROUND FIRE LINES OR PRIVATE WATER MAINS FROM OTHER UNDERGROUND UTILITIES.
11. HYDRANTS SHALL BE OF SUFFICIENT NUMBERS TO ACCOMODATE BASE FIRE FLOW REQUIREMENTS OF THE STRUCTURE.
12. BUILDING CONSTRUCTION TYPE: 5B

LEGEND

	PROPERTY LINE
SD	PROPOSED STORMDRAIN PIPE
8W	PROPOSED WATERLINE (SIZE VARIES)
	PROPOSED FUTURE GRAVITY SANITARY SEWER
SSFM	PROPOSED FORCEMAIN
	PROPOSED FIRE HYDRANT
13"PINE	EXISTING TREE TO BE SAVED AND PROTECTED

NOTES:

1. WATER SERVICE SHALL BE PRIVATE.
2. FORCEMAIN SEWER SERVICE SHALL BE PRIVATE.
3. FUTURE GRAVITY SANITARY SEWER SHALL BE PUBLIC.
4. WATER USAGE:
   EMPLOYEES (BLDG. 2): 180 X 25 GPD/EMPLOYEE = 4,500 GPD
   CAFETERIA: 180 SEATS X 40 GPD/SEAT = 7,200 GPD
   TOTAL WATER USAGE (BLDG. 2) = 11,700 GPD
5. SEWER USAGE:
   EMPLOYEES (BLDG. 2): 180 X 25 GPD/EMPLOYEE = 4,500 GPD
   CAFETERIA: 180 SEATS X 40 GPD/SEAT = 7,200 GPD
   TOTAL WATER USAGE (BLDG. 2) = 11,700 GPD

For each open utility cut of City streets, a $325 permit shall be required from the City prior to occupancy and/or project acceptance.

NCDENR PWSS WATER PERMIT #: _____
WATER CAPACITY: _____ GPD
DWQ SEWER PERMIT #: _____
SEWER CAPACITY: _____ GPD
SEWER SHED # AND PLANT: _____
SEWER TO FLOW THROUGH NEI: YES or NO (CIRCLE ONE)

Approved Construction Plan

	Name	Date
Planning		
Traffic		
Fire		

SCALE: 1" = 30'
0 30 60 90

LIVE OAK BANK

LIVE OAK BANK
nCINO SOFTWARE COMPANY
BUILDING 2

NORRIS & TUNSTALL CONSULTING ENGINEERS, P.C.
1127 FLORAL PARKWAY SUITE 400
WILMINGTON, NC 28403
PHONE (910) 343-9653
FAX (910) 343-9604
office@nkteng.com
licence #C-3641

LS3P
2528 INDEPENDENCE BLVD. SUITE 200
WILMINGTON, NORTH CAROLINA 28412
TEL. 910.790.9901 FAX 910.790.3111
WWW.LS3P.COM

NORTH CAROLINA PROFESSIONAL SEAL 19851 ENGINEER JOHN S. TUNSTALL

MEMBERS OF THE AMERICAN INSTITUTE OF ARCHITEC

COPYRIGHT 2013 ALL RIGHTS RESERVED
PRINTED OR ELECTRONIC DRAWINGS AND DOCUMENTATION MAY NOT BE REPRODUCED IN ANY FORM WITHOUT WRITTEN PERMISSION FROM LS3P ASSOCIATES LTD.

REVISIONS:

No.	Description	Date

PROJECT: 7101-126230
DATE: 16 NOV 2013
DRAWN BY: Author
CHECKED BY: Checker

UTILITY PLAN

C2

NT #13015

PERMIT SET

EXISTING BUILDING FFE=53.5

PROPOSED BUILDING FFE=52.00

6' COVERED DECK WALK-WAY

DECK

DECK

TIE INTO EXIST. MULCH PATH.

WOOD WHEEL STOP. TYPICAL FOR ALL PARKING NOT BOUNDED BY CONCRETE CURBING.

BIKE RACK

HC SIGN TYPICAL.

TIE INTO EXIST. WALK.

76 PERVIOUS PARKING SPACES EXISTING

TIE INTO EXIST. PERVIOUS PVMT.

TIE INTO EXIST. PERVIOUS PVMT.

REINFORCED BRICK PAVERS AT LOADING AREA

CONCRETE CURB TYPICAL.

NEW DUMPSTER AREA. SEE ARCH. PLANS FOR SCREENING.

20'X70' SIGHT TRIANGLE

EXISTING 10' MUP

18' STREET YARD

STOP SIGN AND 2' WHITE THERMOPLASTIC STOP BAR

SIGN

20'X70' SIGHT TRIANGLE

TIBURON DR. 60' PUBLIC R/W

EXISTING IRON

INSTALL NEW HC RAMP. SEE DETAIL.

RE-STRIPE 10' WIDE HI-VISIBILITY PEDESTRIAN CROSSING IN ACCORDANCE WITH COW, NCDOT AND MUTCD STANDARDS. SEE DETAIL.

STANDARD CITY OF WILMINGTON DRIVE ENTRANCE.

EXISTING IRON

POWER TRANSFORMER

STORM MANHOLE

FIRE & HYDRANT

LEGEND

- ASPHALT PAVING
- CONCRETE PAVING
- PERVIOUS CONCRETE PAVING
- BRICK PAVERS.
- WOOD DECK
- MULCH PATH

For each open utility cut of City streets, a $325 permit shall be required from the City prior to occupancy and/or project acceptance.

NOTES:
1. TACTILE WARNING MATS ARE TO BE INSTALLED ON ALL WHEELCHAIR RAMPS.
2. ALL PAVEMENT PARKINGS IN PUBLIC RIGHTS-OF-WAY AND FOR DRIVEWAYS SHALL BE THERMOPLASTIC AND MEET CITY AND NCDOT STANDARDS.
3. ALL PROPOSED VEGETATION WITHIN THE SIGHT TRIANGLES SHALL NOT INTERFERE WITH CLEAR VISUAL SIGHT LINES FROM 30"-10'.
4. SEE LANDSCAPE PLANS FOR BRICK WALKWAY DETAILS AND DECKING GRADES.
5. SEE SITE DATA FOR BUILDING DIMENSIONS.
6. TYPICAL PARKING SPACE: 9'X18', HC ACCESSIBLE: 8'X18' (STRIPING: 5'/5'X18')
7. WHEEL STOP SHALL BE PLACED AT ALL PARKING SPACES NOT BOUNDED BY CONCRETE CURB.
8. A LANDSCAPE PLAN INDICATING THE LOCATION OF REQUIRED STREET TREES SHALL BE SUBMITTED TO THE CITY OF WILMINGTON TRAFFIC ENGINEERING DIVISION AND PARKS AND RECREATION DEPARTMENT FOR REVIEW AND APPROVAL PRIOR TO THE RECORDING OF THE FINAL PLAT.

Approved Construction Plan

	Name	Date
Planning		
Traffic		
Fire		

SCALE: 1" = 30'

0 30 60 90

LIVE OAK BANK

LIVE OAK BANK nCINO SOFTWARE COMPANY BUILDING 2

NORRIS & TUNSTALL CONSULTING ENGINEERS, P.C.
1127 FLORAL PARKWAY SUITE 400
WILMINGTON, NC 28403
PHONE (910) 343-9653
FAX (910) 343-9604
office@nkteng.com
licence #C-3641

LS3P
2528 INDEPENDENCE BLVD. SUITE 200
WILMINGTON, NORTH CAROLINA 28412
TEL. 910.790.9901 FAX 910.790.3111
WWW.LS3P.COM

NORTH CAROLINA PROFESSIONAL SEAL 19651 ENGINEER JOHN S. TUNSTALL

MEMBERS OF THE AMERICAN INSTITUTE OF ARCHITEC

COPYRIGHT 2013 ALL RIGHTS RESERVED
PRINTED OR ELECTRONIC DRAWINGS AND DOCUMENTATION MAY NOT BE REPRODUCED IN ANY FORM WITHOUT WRITTEN PERMISSION FROM LS3P ASSOCIATES LTD.

REVISIONS:

No.	Description	Date

PROJECT: 7101-126230
DATE: 06 NOV 2013
DRAWN BY: Author
CHECKED BY: Checker

LAYOUT PLAN

C3

NT #13015

PERMIT SET

LIVE OAK BANK

LIVE OAK BANK
nCINO SOFTWARE
COMPANY
BUILDING 2

NORRIS & TUNSTALL
CONSULTING
ENGINEERS, P.C.
1127 FLORAL PARKWAY SUITE 400
WILMINGTON, NC 28403
PHONE (910) 343-9653
FAX (910) 343-9604
office@nkteng.com
licence #C-3641

LS3P
2528 INDEPENDENCE BLVD. SUITE 200
WILMINGTON, NORTH CAROLINA 28412
TEL. 910.790.9901 FAX 910.790.3111
WWW.LS3P.COM

NORTH CAROLINA PROFESSIONAL ENGINEER SEAL 19851 JOHN S. TUNSTALL

MEMBERS OF THE AMERICAN INSTITUTE OF ARCHITECTS

COPYRIGHT 2013 ALL RIGHTS RESERVED
PRINTED OR ELECTRONIC DRAWINGS AND DOCUMENTATION MAY NOT BE REPRODUCED IN ANY FORM WITHOUT WRITTEN PERMISSION FROM LS3P ASSOCIATES LTD.

REVISIONS:

No.	Description	Date

PROJECT: 7101-126230
DATE: 06 NOV 2013
DRAWN BY: Author
CHECKED BY: Checker

NOTES AND DETAILS

C4

NT #13015

PERMIT SET

SITE WORK NOTES:

1. THE CONTRACTOR SHALL VISIT THE SITE TO BECOME FAMILIAR WITH FIELD CONSTRUCTION CONDITIONS.

2. CONTRACTOR SHALL COORDINATE WORK WITHIN NCDOT AND LOCAL RIGHT OF WAYS WITH PROPER AUTHORITIES AND SHALL MEET ANY REQUIREMENTS AS TO TRAFFIC CONTROL AND CONNECTION TO EXISTING STREETS.

3. CLEARING AND GRUBBING: REMOVE ALL TREES AS REQUIRED UNLESS OTHERWISE NOTED TO REMAIN, STUMPS, ROOTS, SHRUBBERY, ASPHALT, CONCRETE, STRUCTURES, BURIED UTILITIES, STORAGE TANKS, ETC. WITHIN LIMITS OF CONSTRUCTION.

4. STRIPPING: BEFORE EXCAVATING OR FILLING, REMOVE ALL TOPSOIL, WOOD, LEAVES, AND ANY OTHER UNSUITABLE MATERIAL.

5. MUCKING: REMOVE ANY SOFT, ORGANIC SILT MATERIALS AND EXISTING BURIED CONSTRUCTION DEBRIS AS REQUIRED AND FILL TO SUBGRADE ELEVATIONS WITH A CLEAN SELECT-FILL COMPACTED AS SPECIFIED.

6. DISPOSAL: CLEARED, GRUBBED, STRIPPED OR EXCAVATED SPOIL SHALL BE REMOVED FROM SITE AND DISPOSED OF IN ACCORDANCE WITH ALL APPLICABLE LOCAL AND STATE CODES.

7. BORROW MATERIAL: THE CONTRACTOR SHALL FURNISH BORROW MATERIAL REQUIRED FROM OFF SITE AND OBTAIN ALL REQUIRED PERMITS ASSOCIATED WITH BORROW OPERATIONS.

8. FILL AND COMPACTION: AFTER STRIPPING THOSE AREAS DESIGNATED TO RECEIVE FILL SHOULD BE PROOFROLLED. THE TOP 8" OF SUBGRADE SHALL BE COMPACTED TO AT LEAST 98% OF MAXIMUM DENSITY AT OPTIMUM MOISTURE CONTENT. ANY AREA WHICH PUMPS OR RUTS EXCESSIVELY SHOULD BE UNDERCUT AND REPLACED WITH A CLEAN, SILTY OR CLAYEY SAND HAVING A UNIFIED SOIL CLASSIFICATION OF SP, SM, OR SC. FILL MATERIAL 5' OUTSIDE OF BUILDING AREAS SHALL THEN BE PLACED IN LAYERS NOT TO EXCEED 8" AND COMPACTED TO AT LEAST 95% OF THE STANDARD PROCTOR MAXIMUM DRY DENSITY (ASTM D-698) WITH THE UPPER 12 INCHES OF SUBGRADE BEING COMPACTED TO 98% OF THE STANDARD PROCTOR MAXIMUM DRY DENSITY. FILL MATERIALS WITHIN BUILDING AREAS TO A LINE OUTSIDE THE BUILDING AREAS SHALL BE PLACED IN LAYERS NOT TO EXCEED 8" AND COMPACTED TO AT LEAST 98% OF THE STANDARD PROCTOR MAXIMUM DRY DENSITY (ASTM D-698) WITH THE UPPER 12 INCHES OF SUBGRADE BEING COMPACTED IN 6 INCH LAYERS TO 100% OF THE STANDARD PROCTOR MAXIMUM DRY DENSITY. IN AREAS WHERE NO STRUCTURAL FILL IS TO BE PLACED THE UPPER 12 INCHES OF IN-PLACE SUBGRADE SHOULD BE COMPACTED TO AT LEAST 98% OF THE STANDARD PROCTOR MAXIMUM DRY DENSITY. IF THE MATERIAL IS TOO DRY TO COMPACT TO THE REQUIRED DENSITY EACH LAYER SHALL BE WETTED IN ACCORDANCE WITH COMPACTION REQUIREMENTS. IF THE MATERIAL IS TOO WET TO SECURE PROPER COMPACTION, IT SHALL BE HARROWED REPEATEDLY OR OTHERWISE AERATED WITH SUITABLE EQUIPMENT UNTIL OPTIMUM MOISTURE CONTENT IS OBTAINED. FILL SHALL BE PLACED IN SUCH A MANNER THAT THE SURFACE WILL DRAIN READILY AT ALL TIMES. SEE STRUCTURAL NOTES AND SOILS REPORT FOR ADDITIONAL REQUIREMENTS.

9. LAYOUT: THE CONTRACTOR SHALL PROVIDE ALL LAYOUT REQUIRED TO CONSTRUCT HIS WORK.

10. THE CONTRACTOR IS RESPONSIBLE FOR THE LOCATION AND PROTECTION OF EXISTING UTILITIES DURING CONSTRUCTION.

11. EXISTING BOUNDARY AND TOPOGRAPHIC INFORMATION FROM SURVEY BY HANOVER DESIGNS SERVICES P.A., AND PROVIDED BY OWNER.

12. THE CONTRACTOR SHALL VERIFY DIMENSIONS AT JOBSITE.

13. THE CONTRACTOR IS RESPONSIBLE FOR THE COORDINATION OF RELOCATION OR DISCONNECTION OF ALL EXISTING UTILITIES WITH APPLICABLE AGENCIES AND AUTHORITIES.

14. ALL PAVEMENT AND BASE MATERIALS AND WORKMANSHIP SHALL CONFORM TO NCDOT STANDARDS.

15. WATER AND SEWER SERVICES SHALL BE INSTALLED TO MEET LOCAL AND STATE PLUMBING CODES. METER AND TAPS SHALL MEET ALL LOCAL REQUIREMENTS.

16. ALL AREAS SHALL BE GRADED FOR POSITIVE DRAINAGE.

17. SEE SOILS REPORT FOR ADDITIONAL REQUIREMENTS.

18. CONTRACTOR SHALL NOTE THAT EARTHWORK QUANTITIES ARE HIS RESPONSIBILITY. PLANS DO NOT REPRESENT A BALANCED EARTHWORK CONDITION.

19. REINF. CONC. PIPE SHALL BE CLASS III W/RUBBER GASKETED JOINT OR "RAM NECK". INSTALL PER MANUFACTURER'S REQUIREMENTS.

20. USE WHITE LANE MARKING PAINT FOR ALL PAVEMENT MARKINGS. PAINT SHALL BE A CHLORINATED RUBBER ALKYD, FS TT-P-115, TYPE III, FACTORY MIXED, QUICK DRYING, NON-BLEEDING.

21. REFER TO THE PLUMBING DRAWINGS FOR LOCATION AND INVERTS OF NEW WASTE AND WATER LINES.

EROSION CONTROL NOTES AND MAINTENANCE PLAN

1. ALL EROSION AND SEDIMENT CONTROL MEASURES WILL BE CHECKED FOR STABILITY AND OPERATION FOLLOWING EVERY RUNOFF-PRODUCING RAINFALL, BUT IN NO CASE, LESS THAN ONCE EVERY WEEK AND WITHIN 24 HOURS OF EVERY HALF-INCH RAINFALL.

2. ALL POINTS OF EGRESS WILL HAVE CONSTRUCTION ENTRANCES THAT WILL BE PERIODICALLY TOP-DRESSED WITH AN ADDITIONAL 2 INCHES OF #4 STONE TO MAINTAIN PROPER DEPTH. THEY WILL BE MAINTAINED IN A CONDITION TO PREVENT MUD OR SEDIMENT FROM LEAVING THE SITE. IMMEDIATELY REMOVE OBJECTIONABLE MATERIAL SPILLED WASHED OR TRACKED ONTO THE CONSTRUCTION ENTRANCE OR ROADWAYS.

3. SEDIMENT WILL BE REMOVED FROM HARDWARE CLOTH AND GRAVEL INLET PROTECTION, BLOCK AND GRAVEL INLET PROTECTION, ROCK DOUGHNUT INLET PROTECTION AND ROCK PIPE INLET PROTECTION WHEN THE DESIGNED STORAGE CAPACITY HAS BEEN HALF FILLED WITH SEDIMENT. ROCK WILL BE CLEANED OR REPLACED WHEN THE SEDIMENT POOL NO LONGER DRAINS AS DESIGNED. DEBRIS WILL BE REMOVED FROM THE ROCK AND HARDWARE CLOTH TO ALLOW PROPER DRAINAGE. SILT SACKS WILL BE EMPTIED ONCE A WEEK AND AFTER EVERY RAIN EVENT. SEDIMENT WILL BE REMOVED FROM AROUND BEAVER DAMS, DANDY SACKS AND SOCKS ONCE A WEEK AND AFTER EVERY RAIN EVENT.

4. DIVERSION DITCHES WILL BE CLEANED OUT IMMEDIATELY TO REMOVE SEDIMENT OR OBSTRUCTIONS FROM THE FLOW AREA. THE DIVERSION RIDGES WILL ALSO BE REPAIRED. SWALES MUST BE TEMPORARILY STABILIZED WITHIN 21 CALENDAR DAYS OF CEASE OF ANY PHASE OF ACTIVITY ASSOCIATED WITH A SWALE.

5. SEDIMENT WILL BE REMOVED FROM BEHIND THE SEDIMENT FENCE WHEN IT BECOMES HALF FILLED. THE SEDIMENT FENCE WILL BE REPAIRED AS NECESSARY TO MAINTAIN A BARRIER. STAKES MUST BE STEEL. STAKE SPACING WILL BE 6 FEET MAX. WITH THE USE OF EXTRA STRENGTH FABRIC, WITHOUT WIRE BACKING. STAKE SPACING WILL BE 8 FEET MAX. WHEN STANDARD STRENGTH FABRIC AND WIRE BACKING ARE USED. IF ROCK FILTERS ARE DESIGNED AT LOW POINTS IN THE SEDIMENT FENCE, THE ROCK WILL BE REPAIRED OR REPLACED IF IT BECOMES HALF-FULL OF SEDIMENT, NO LONGER DRAINS AS DESIGNED OR IS DAMAGED.

6. SEDIMENT WILL BE REMOVED FROM SEDIMENT TRAPS WHEN THE DESIGNED STORAGE CAPACITY HAS BEEN HALF FILLED WITH SEDIMENT. THE ROCK WILL BE CLEANED OR REPLACED WHEN THE SEDIMENT POOL NO LONGER DRAINS OR WHEN THE ROCK IS DISLODGED. BAFFLES WILL BE REPAIRED OR REPLACED IF THEY COLLAPSE, TEAR, DECOMPOSE OR BECOME INEFFECTIVE. THEY WILL BE REPLACED PROMPTLY. SEDIMENT WILL BE REMOVED WHEN DEPOSITS REACH HALF THE HEIGHT OF THE 1ST BAFFLE. FLOATING SKIMMERS WILL BE INSPECTED AND KEPT CLEAN WEEKLY.

7. LAND QUALITY REQUIRES:
ALL SEEDED AREAS WILL BE FERTILIZED, RESEEDED AS NECESSARY, AND MULCHED, ACCORDING TO SPECIFICATIONS IN THE VEGETATIVE PLAN, TO MAINTAIN A VIGOROUS, DENSE VEGETATIVE COVER. ALL SLOPES WILL BE STABILIZED WITHIN 21 CALENDAR DAYS. ALL OTHER AREAS WILL BE STABILIZED WITHIN 15 WORKING DAYS.

WATER QUALITY REQUIRES:
ALL SEEDED AREAS WILL BE FERTILIZED, RESEEDED AS NECESSARY AND MULCHED ACCORDING TO SPECIFICATIONS IN THE VEGETATIVE PLAN TO MAINTAIN A VIGOROUS, DENSE VEGETATIVE COVER. ALL PERIMETER DIKES, SWALES, DITCHES, PERIMETER SLOPES, ALL SLOPES STEEPER THAN 3' HORIZONTAL TO 1' VERTICAL (3:1) AND ALL HIGH QUALITY WATER (HQW) ZONES SHALL BE PROVIDED TEMPORARY OR PERMANENT STABILIZATION WITH GROUND COVER AS SOON AS PRACTICABLE BUT IN ANY EVENT WITHIN SEVEN (7) CALENDAR DAYS FROM THE LAST LAND-DISTURBING ACTIVITY. ALL OTHER DISTURBED AREAS SHALL BE PROVIDED TEMPORARY OR PERMANENT STABILIZATION WITH GROUND COVER AS SOON AS PRACTICABLE BUT IN ANY EVENT WITHIN FOURTEEN (14) CALENDAR DAYS FROM THE LAST LAND-DISTURBING ACTIVITY.

For each open utility cut of City streets, a $325 permit shall be required from the City prior to occupancy and/or project acceptance.

CITY OF WILMINGTON NORTH CAROLINA
Public Services • Engineering Division
APPROVED STORMWATER MANAGEMENT PLAN
Date: ______ Permit #______
Signed: ______

Approved Construction Plan		
	Name	Date
Planning		
Traffic		
Fire		

CITY OF WILMINGTON STANDARD NOTES

1. CONTACT THE NORTH CAROLINA ONE CALL CENTER PRIOR TO DOING ANY DIGGING AT 1-800-632-4949.
2. PRIOR TO ANY CLEARING, GRADING OR CONSTRUCTION ACTIVITY, TREE PROTECTION FENCING WILL BE INSTALLED AROUND PROTECTED TREES OR GROVES OF TREES AND NO CONSTRUCTION WORKERS, TOOLS, MATERIALS, OR VEHICLES ARE PERMITTED WITHIN THE TREE PROTECTION FENCING;
3. ALL PAVEMENT MARKINGS IN PUBLIC RIGHTS-OF-WAY AND FOR DRIVEWAYS ARE TO BE THERMOPLASTIC AND MEET CITY AND/OR NCDOT STANDARDS.
4. ALL PARKING STALL MARKINGS AND LANE ARROWS WITHIN THE PARKING AREAS SHALL BE WHITE.
5. INSTALL REFLECTORS PER CITY AND NCDOT STANDARDS. TRAFFIC ENGINEERING MUST APPROVE OF PAVEMENT MARKING LAYOUT PRIOR TO ACTUAL STRIPING.
6. ALL TRAFFIC CONTROL SIGNS AND MARKINGS OFF THE RIGHT-OF-WAY ARE TO BE MAINTAINED BY THE PROPERTY OWNER IN ACCORDANCE WITH MUTCD STANDARDS.
7. TRAFFIC CONTROL DEVICES (INCLUDING SIGNS AND PAVEMENT MARKINGS) IN AREAS OPEN TO PUBLIC TRAFFIC ARE TO MEET MUTCD (MANUAL ON UNIFORM TRAFFIC CONTROL DEVICES) STANDARDS.
8. IT SHALL BE THE RESPONSIBILITY OF THE SUBDIVIDER TO ERECT OFFICIAL STREET NAME SIGNS AT ALL INTERSECTIONS ASSOCIATED WITH THE SUBDIVISION IN ACCORDANCE WITH THE TECHNICAL STANDARDS AND SPECIFICATIONS MANUAL. THE SUBDIVIDER MAY ACQUIRE AND ERECT OFFICIAL STREET NAME SIGNS OR MAY CHOOSE TO CONTRACT WITH THE CITY TO INSTALL THE STREET SIGNS AND THE SUBDIVIDER SHALL PAY THE COST OF SUCH INSTALLATION. CONTACT TRAFFIC ENGINEERING AT 341-7888 TO DISCUSS INSTALLATION OF TRAFFIC AND STREET NAME SIGNS. POSTED STREET NAMES MUST BE APPROVED PRIOR TO INSTALLATION OF STREET NAME SIGNS.
9. CONTACT TRAFFIC ENGINEERING AT 341-7888 FOURTY-EIGHT HOURS PRIOR TO ANY EXCAVATION IN THE RIGHT-OF-WAY.
10. A UTILITY CUT PERMIT IS REQUIRED FOR EACH OPEN CUT OF A CITY STREET. CONTACT 341-5888 FOR MORE DETAILS. IN CERTAIN CASES AN ENTIRE RESURFACING OF THE AREA BEING OPEN CUT MAY BE REQUIRED.
11. ANY BROKEN OR MISSING SIDEWALK PANELS, DRIVEWAY PANELS, AND CURBING WILL BE REPLACED.
12. CONTACT KAREN DIXON AT 341-7888 TO DISCUSS STREET LIGHTING OPTIONS.
13. PROJECT SHALL COMPLY WITH CFPUA CROSS CONNECTION CONTROL REQUIREMENTS. WATER METER(S) CANNOT BE RELEASED UNTIL ALL REQUIREMENTS ARE MET AND THE STATE HAS GIVEN THEIR FINAL APPROVAL. CALL 343-3910 FOR INFORMATION.
14. IF THE CONTRACTOR DESIRES CFPUA WATER FOR CONSTRUCTION HE SHALL APPLY IN ADVANCE FOR THIS SERVICE AND MUST PROVIDE A REDUCED PRESSURE ZONE (RPZ) BACKFLOW PREVENTION DEVICE ON THE DEVELOPER'S SIDE OF THE WATER METER BOX.
15. ANY IRRIGATION SYSTEM SUPPLIED BY CFPUA WATER SHALL COMPLY WITH CFPUA CROSS CONNECTION CONTROL REGULATIONS. CALL 332-6558 FOR INFORMATION.
16. ANY BACKFLOW PREVENTION DEVICES REQUIRED BY CFPUA WILL NEED TO BE ON THE LIST OF APPROVED DEVICES BY USCFCCCHR OR ASSE.
17. WHEN PVC WATER MAINS AND/OR POLYETHYLENE SERVICES ARE PROPOSED, THE PIPES ARE TO BE MARKED WITH NO. 10 INSULATED SINGLE STRAND COPPER WIRE INSTALLED THE ENTIRE LENGTH AND SECURED TO ALL VALVES. THIS WIRE IS TO BE ACCESSIBLE AT ALL FIRE HYDRANTS AND WATER METER BOXES TO AID IN FUTURE LOCATION OF FACILITIES.
18. THE NUMBER AND SPACING OF DRIVEWAYS FOR ALL INTERCONNECTED SITES WILL BE DETERMINED BY THE COMBINED FRONTAGE OF THE INTERCONNECTED PROPERTIES.
19. UNDERGROUND FIRE LINE MUST BE PERMITTED AND INSPECTED BY THE WILMINGTON FIRE DEPARTMENT FROM THE PUBLIC ROW TO THE BUILDING. CONTACT THE WILMINGTON FIRE DEPARTMENT DIVISION OF FIRE AND LIFE SAFETY AT 910-343-0696 FOR ADDITIONAL INFORMATION.

TEMPORARY/PERMANENT GRASS SPECIFICATION

1. CHISEL COMPACTED AREAS AND SPREAD TOPSOIL 3 INCHES DEEP OVER ADVERSE SOIL CONDITIONS.
2. RIP THE ENTIRE AREA TO A 6 INCH DEPTH.
3. REMOVE ALL ROCKS, ROOTS AND OTHER OBSTRUCTIONS LEAVING SURFACES SMOOTH AND UNIFORM.
4. APPLY AGRICULTURAL LIME AND FERTILIZER UNIFORMLY AND MIX WITH SOIL.
   LIME: 45 LBS. PER 1000 S.F.
   PHOSPHOROUS: 20 LBS PER 1000 S.F.
   FERTILIZER: 17 LBS. PER 1000 S.F.
5. CONTINUE TILLAGE UNTIL A WELL PULVERIZED, FIRM, UNIFORM SEED BED IS PREPARED 4-6 INCHES DEEP.
6. SEED ON A FRESHLY PREPARED SEED BED AND COVER SEED LIGHTLY.
   2 - 3 LBS PER 1000 S.F. (SEE MIXTURE BELOW)
7. MULCH IMMEDIATELY AFTER SEEDING AND ANCHOR MULCH.
   GRAIN STRAW & HAY AT 75 TO 100 LBS PER 1000 S.F.
   WOOD CHIPS AT 500 LBS. PER 1000 S.F.
   JUTE & MESH AS PER MANUFACTURER
8. ASPHALT FOR ANCHORING MULCH SHALL BE TYPE SS-1 EMULSION AND APPLIED AT A RATE OF 1000 GAL. PER ACRE FOR SLOPE STABILIZATION, AND 150 GAL. PER TON OF STRAW FOR ANCHORING STRAW.
9. INSPECT ALL SEEDED AREAS AND MAKE NECESSARY REPAIRS OR RESEED WITHIN THE PLANTING SEASON, IF POSSIBLE. IF GRASS STAND SHOULD BE OVER 60% DAMAGED, REESTABLISH FOLLOWING ORIGINAL LIME, FERTILIZER AND SEEDING RATES.
10. CONSULT CONSERVATION INSPECTOR ON MAINTENANCE, TREATMENT, AND FERTILIZATION AFTER PERMANENT COVER IS ESTABLISHED.
11. SEED FOR TEMPORARY AND PERMANENT APPLICATIONS SHALL BE:

20%	CARPET GRASS
28%	BERMUDA GRASS
20%	TURF FESCUE
10%	CREEPING RED FESCUE
20%	ANNUAL RYE GRAIN

*BERMUDA SEED SHALL BE HULLED FOR WARM WEATHER PLANTING. PURITY OF SEED SHALL BE A MIN. OF 98% AND GERMINATION SHALL BE A MIN. OF 85%.

ALL DISTURBED AREA SHALL BE SEEDED WITHIN 7-14 DAYS OF THE COMPLETION OF GRADING. SEE EROSION CONTROL AND MAINTENANCE NOTES. CONSULT CONSERVATION ENGINEER OR SOIL CONSERVATION SERVICE FOR ADDITIONAL INFORMATION CONCERNING OTHER ALTERNATIVES FOR VEGETATION OF DENUDED AREAS. THE ABOVE VEGETATION RATES ARE THOSE WHICH DO WELL UNDER LOCAL CONDITIONS, OTHER SEEDING SCHEDULES MAY BE POSSIBLE.

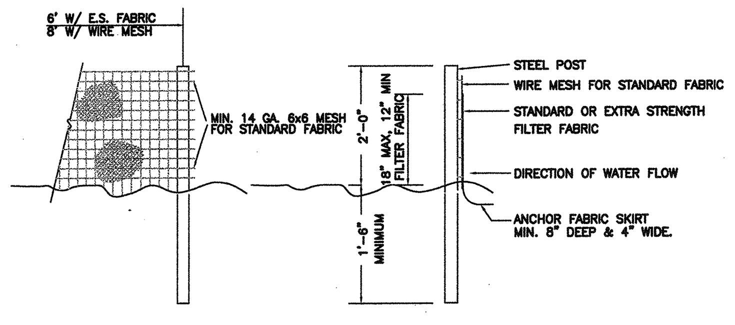

NOTES:
1. SYN. FENCE FABRIC SHALL BE MIN. OF 30" IN WIDTH WITH 30 LB/IN TENSILE STRENGTH FOR STANDARD FABRIC AND 50 LB/IN FOR EXTRA STRENGTH.
2. FABRIC SHALL BE CONTINUOUS LENGTH. IF JOINTS ARE NECESSARY, LAP FABRIC POST TO POST.
3. STEEL POST SHALL BE MIN 4' IN HEIGHT AND BE OF THE SELF-FASTENER STEEL ANGLE TYPE.

TEMPORARY SILT FENCE

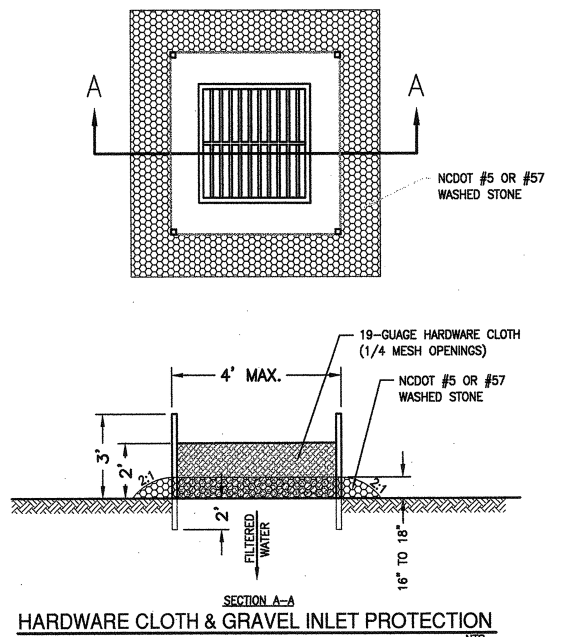

HARDWARE CLOTH & GRAVEL INLET PROTECTION

CONSTRUCTION SEQUENCE:
1. UNIFORMLY GRADE A SHALLOW DEPRESSION APPROACHING THE INLET.
2. DRIVE 5' STEEL POST 2' INTO THE GROUND SURROUNDING THE INLET. SPACE POST EVENLY AROUND THE PERIMETER OF THE INLET, A MAXIMUM OF 4' APART.
3. SURROUND THE POST WITH WIRE MESH HARDWARE CLOTH. SECURE THE WIRE MESH TO THE STEEL POST AT THE TOP, MIDDLE AND BOTTOM. PLACING A 2' FLAP OF THE WIRE MESH UNDER THE GRAVEL FOR ANCHORING IS RECOMMENDED.
4. PLACE CLEAN GRAVEL (NCDOT #5 OR #57 STONE) ON A 2:1 SLOPE WITH A HEIGHT OF 16" AROUND THE WIRE, AND SMOOTH TO AN EVEN GRADE.
5. ONCE THE CONTRIBUTING DRAINAGE AREA HAS BEEN STABILIZED, REMOVE ACCUMULATED SEDIMENT, AND ESTABLISH FINAL GRADING ELEVATIONS.
6. COMPACT THE AREA PROPERLY AND STABILIZE IT WITH GROUNDCOVER.

MAINTENANCE:
INSPECT INLETS AT LEAST WEEKLY AND AFTER EACH SIGNIFICANT (1/2 INCH OR GREATER) RAINFALL EVENT. CLEAR THE MESH WIRE OF ANY DEBRIS OR OTHER OBJECTS TO PROVIDE ADEQUATE FLOW FOR SUBSEQUENT RAINS. TAKE CARE NOT TO DAMAGE OR UNDERCUT THE WIRE MESH DURING SEDIMENT REMOVAL. REPLACE STONE AS NEEDED.

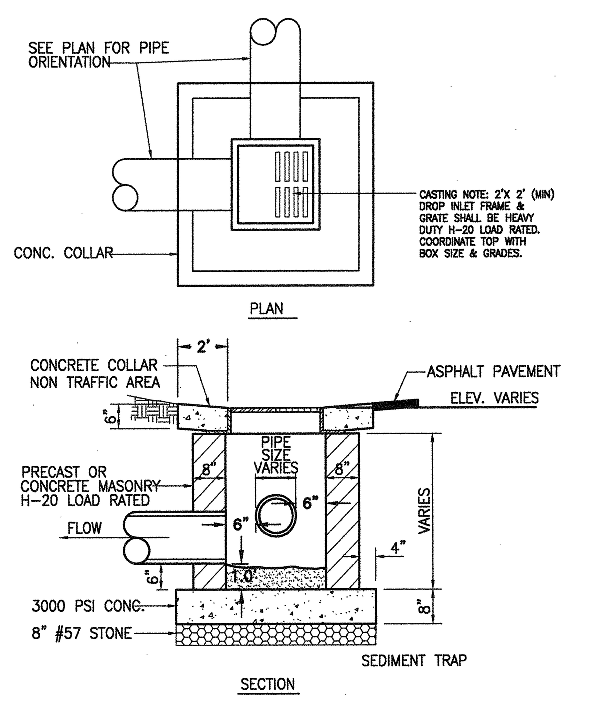

MUST COMPLY WITH CITY OF WILMINGTON STANDARDS

DROP INLET DETAIL

NTS

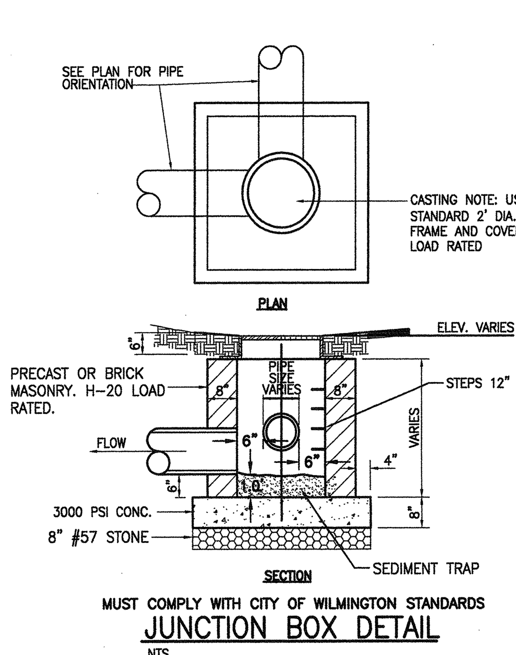

MUST COMPLY WITH CITY OF WILMINGTON STANDARDS

JUNCTION BOX DETAIL

NTS

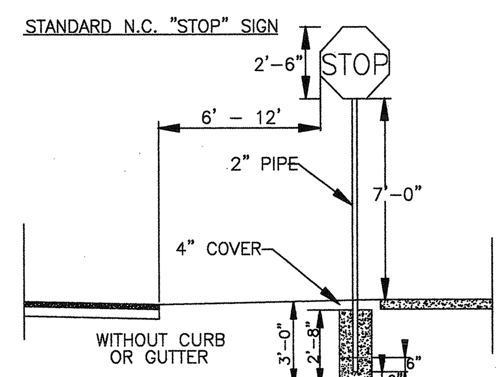

STANDARD N.C. "STOP" SIGN

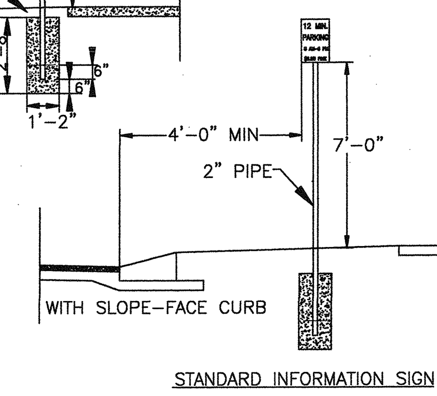

STANDARD INFORMATION SIGN

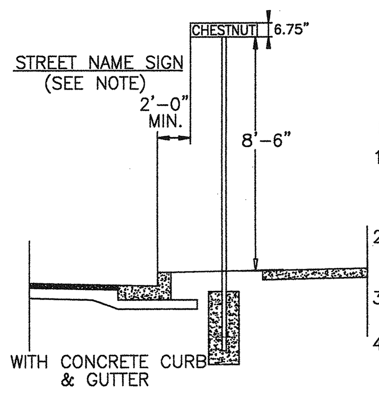

STREET NAME SIGN (SEE NOTE)

NOTES:
1. STREET NAME SIGNS SHALL BE A MINIMUM OF 6" EXTRUDED ALUMINUM BLADES USING A MINUMUM OF 4" C SERIES LETTERING IN REFLECTIVE SILVER & REFLECTIVE GREEN BACKGROUND.
2. ALL REFLECTIVE SIGNS SHALL BE MADE OF ENGINEERING GRADE OR HIGH INTENSITY GRADE REFLECTIVE SHEETING OR APPROVED EQUIVALENT.
3. ALL SIGNS PLACED IN RIGHT-OF-WAY WILL BE APPROVED BY TRAFFIC ENGINEERING DIVISION.
4. ALL FOOTINGS TYPICAL FOR ALL SIGNS, WHICH NEED TO BE ANCHORED IN CONCRETE.

STANDARD SIGN INSTALLATION LOCATION

SD 15-03

NOT TO SCALE

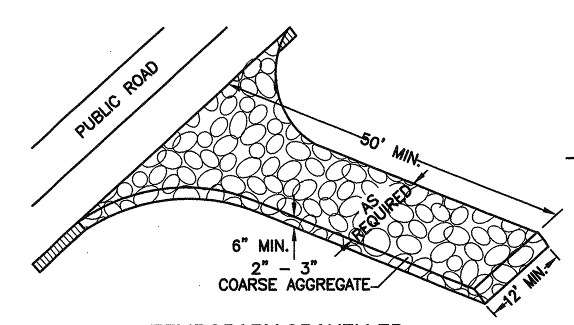

TEMPORARY GRAVELLED CONSTRUCTION ENTRANCE

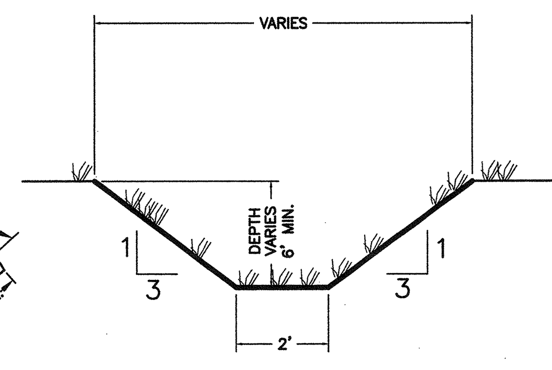

GRASS DITCH SECTION

NTS

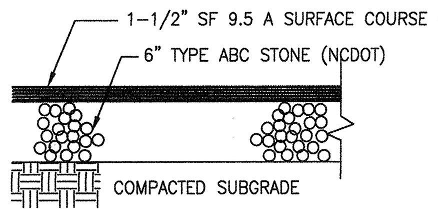

NOTE: PAVEMENT SECTION MAY VARY DEPENDING UPON FIELD CONDITIONS. CONTRACTOR SHALL COORDINATE w/OWNER & GEOTECHNICAL ENGINEER TO DETERMINE ACTUAL PAVEMENT SECTION.

ASPHALT PAVEMENT SECTION

N.T.S.

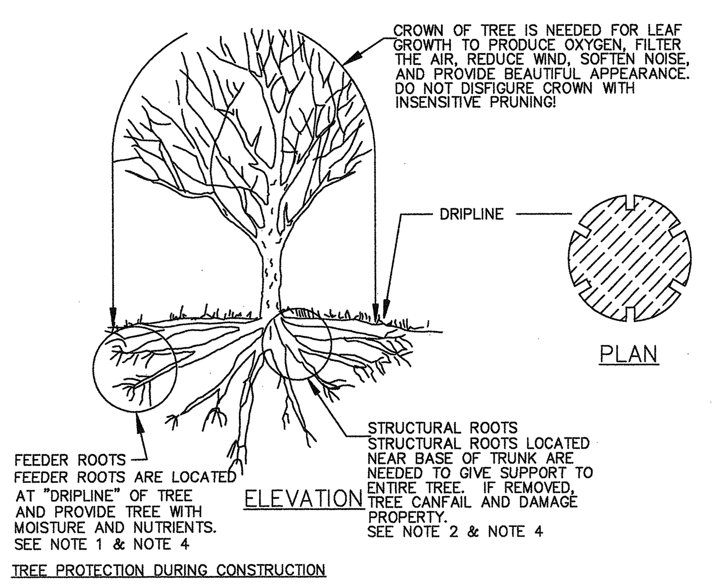

TREE PROTECTION DURING CONSTRUCTION
1. DO NOT COMPACT SOIL BENEATH TREES. NO VEHICLE SHALL BE ALLOWED TO PARK UNDER TREES. NO HEAVY MATERIALS SHALL BE STORED BENEATH TREES. RESULTS OF COMPACTION CAUSE WATER AND AIR NOT TO REACH THE ROOTS AND THE TREE WILL DIE. THESE "FEEDING ROOTS" OCCUR WELL AWAY FROM THE BASE OF THE TREE TO THE EDGE OF THE OVERHEAD BRANCH CANOPY. DAMAGING THE BARK WITH LAWNMOWERS, CONSTRUCTION EQUIPMENT, OR ANYTHING ELSE IS PROHIBITED. APROTECTIVE BARRIER SHOULD PREVENT DAMAGE FROM OCCURING DURING CONSTRUCTION.
2. NO CUTTING OF LARGE STRUCTURAL ROOTS LOCATED NEAR THE BASE OF THE TRUNK. THESE ARE ESSENTIAL IN SUPPORTING THE TREE AND HOLDING IT UPRIGHT IN HIGH WINDS. REMOVAL OF THESE ROOTS ALONG ONE SIDE IS OFTEN DONE BECAUSE OF A WALK, PAVING OR BUILDING WHICH IS BEING CONSTRUCTED.
3. AVOID CUT AND FILL WITHIN DIAMETER OF TREE CROWN DURING EXCAVATION.

METHOD OF TREE PROTECTION DURING CONSTRUCTION

SD 15-09

nts

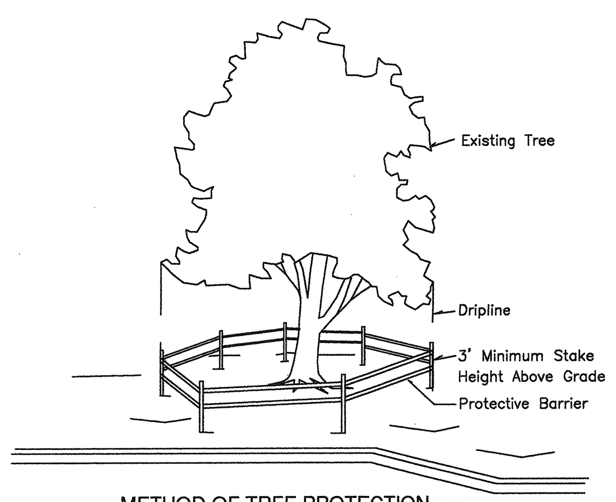

METHOD OF TREE PROTECTION NTS

CLEARLY mark the trees to be saved prior to construction and erect a protective barrier at the dripline.

Dripline-The area of soil directly beneath the tree extending out to the tips of the outermost branches.

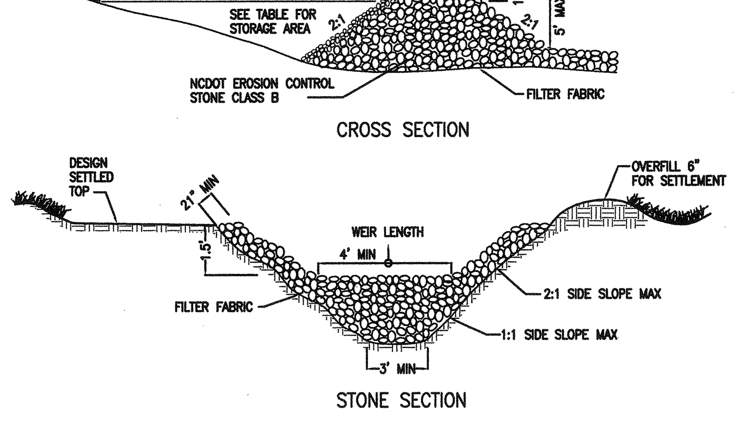

TEMPORARY SEDIMENT TRAP DETAIL

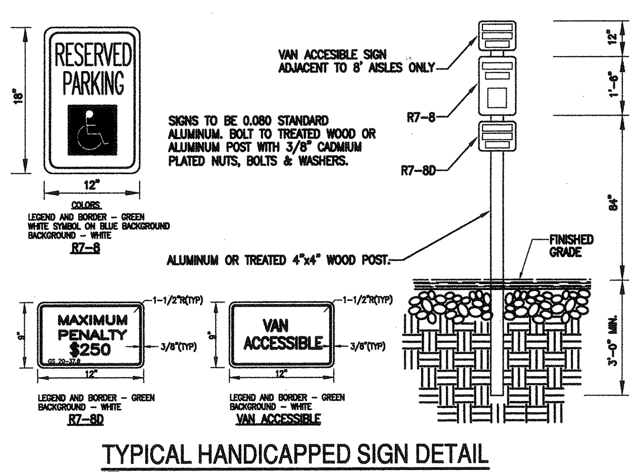

TYPICAL HANDICAPPED SIGN DETAIL

NTS

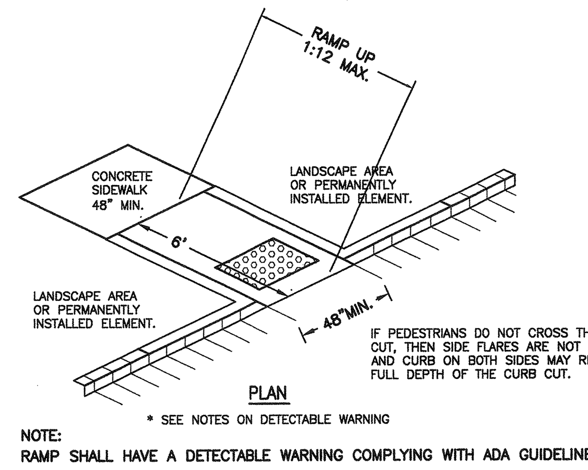

NOTE:
RAMP SHALL HAVE A DETECTABLE WARNING COMPLYING WITH ADA GUIDELINES:
1. The detectable warning shall extend the full width and depth of the curb ramp.
2. Detectable warnings shall consist of raised truncated domes with a diameter of nominal 0.9 in (23 mm), a height of nominal 0.2 in (5 mm) and a center-to-center spacing of nominal 2.35 in (60 mm) and shall contrast visually with adjoining surfaces, either light-on-dark, or dark-on-light. The material used to provide contrast should contrast by at least 70% - Refer to ADA Guidelines for definition of "Contrast".
3. The material used to provide contrast shall be an integral part of the walking surface. Detectable warnings used on interior surfaces shall differ from adjoining walking surfaces in resiliency or sound-on-cane contact.

TYPICAL SIDEWALK AND WHEEL CHAIR RAMP DETAIL

NTS

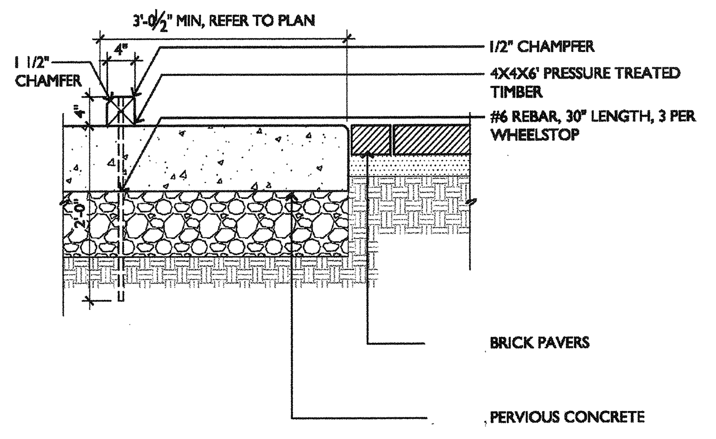

WOOD WHEEL STOP

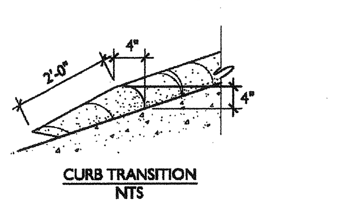

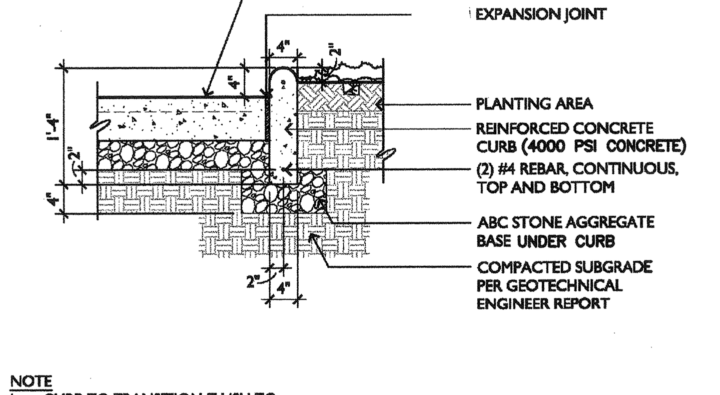

NOTE
1. CURB TO TRANSITION FLUSH TO GRADE AT ENDS, REFER TO LAYOUT PLAN L1.01 FOR LOCATIONS.

CONCRETE CURB

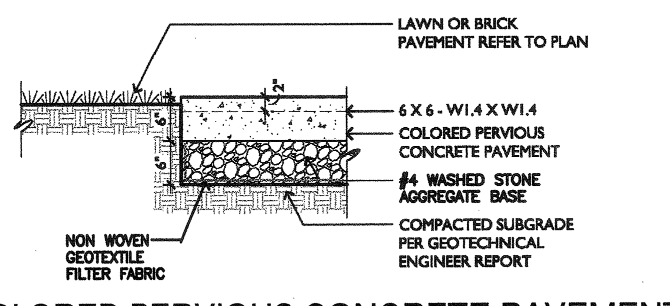

COLORED PERVIOUS CONCRETE PAVEMENT

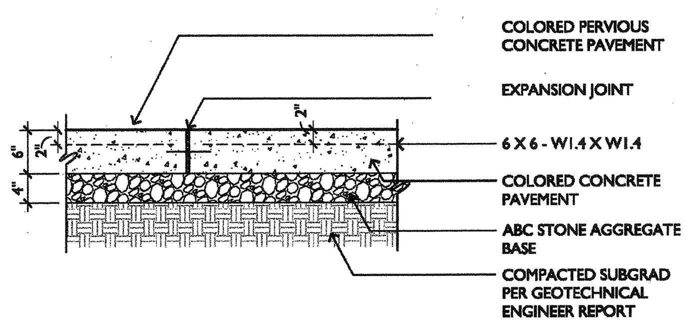

COLORED CONCRETE PAVEMENT

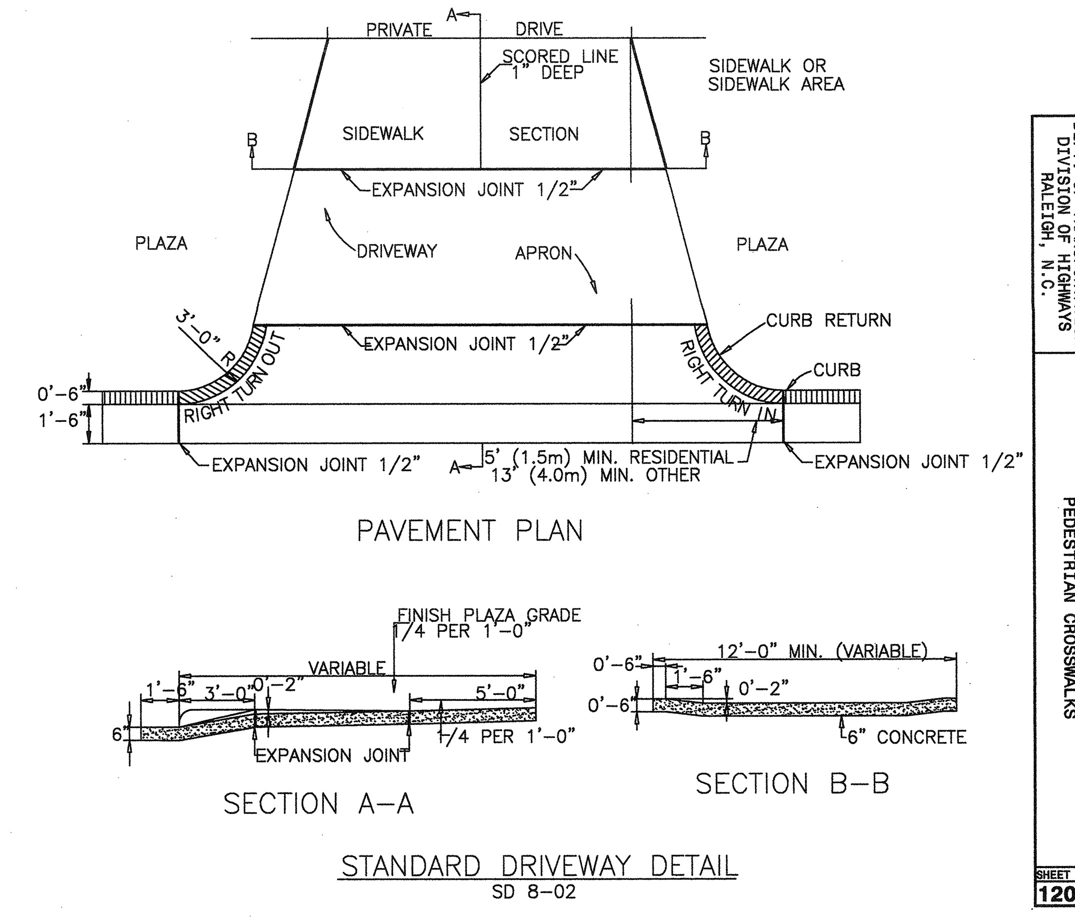

STANDARD DRIVEWAY DETAIL

SD 8-02

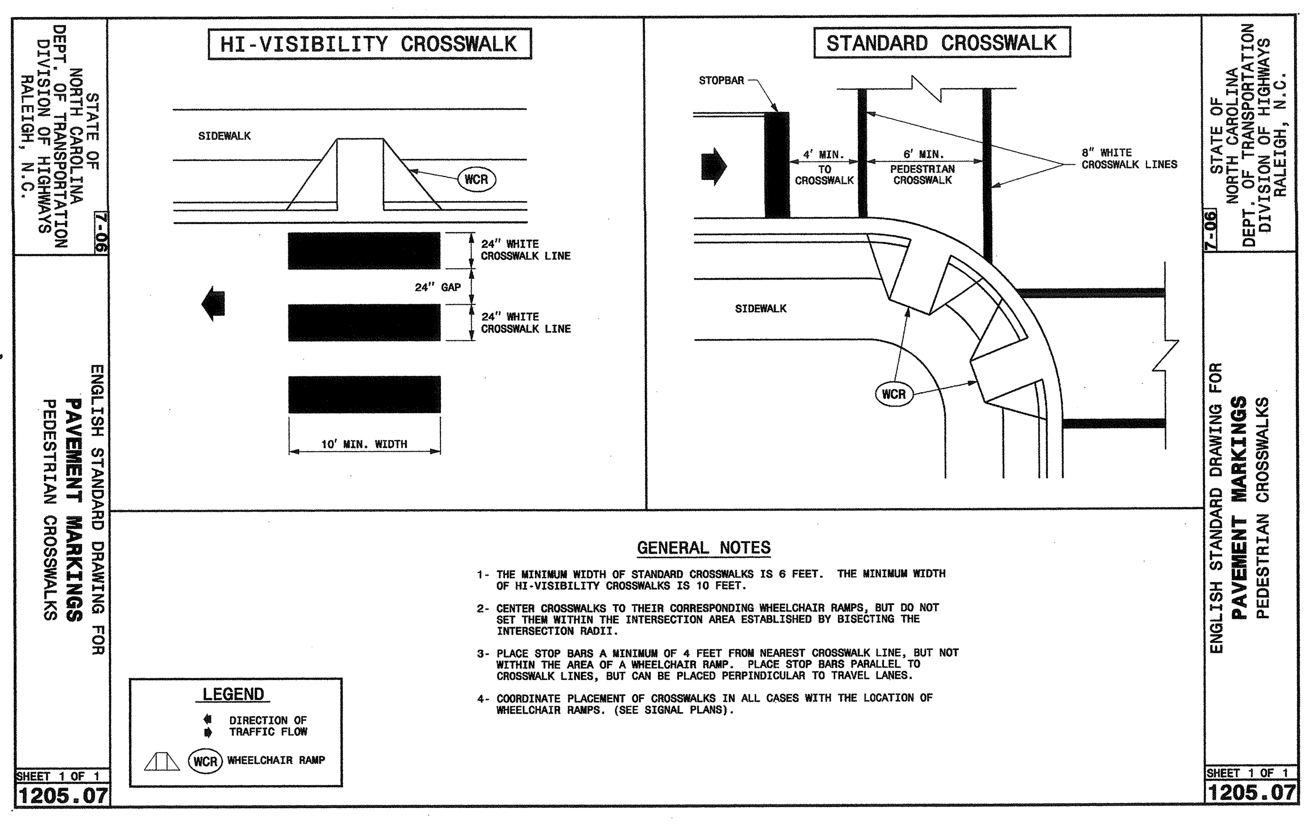

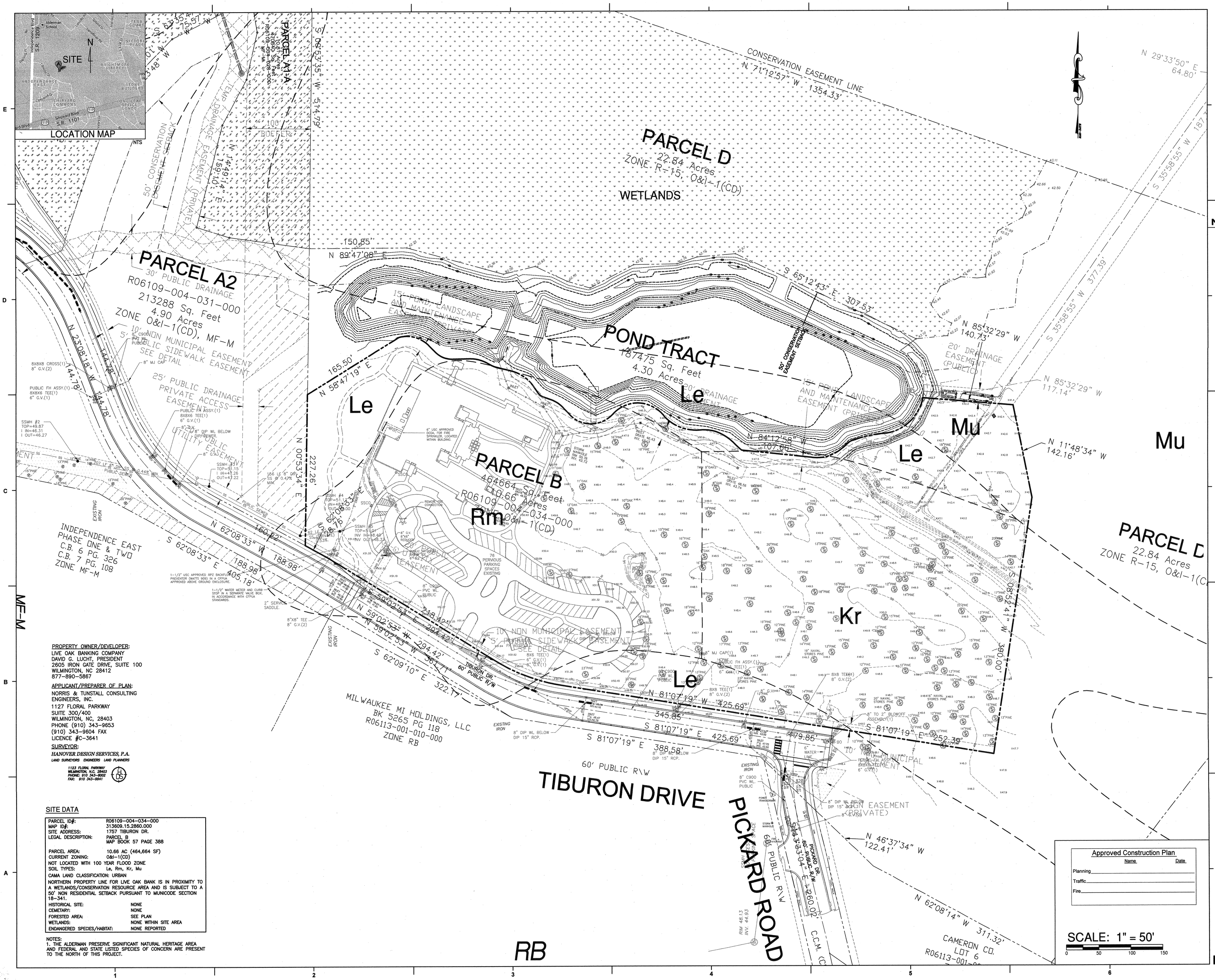

PROPERTY OWNER/DEVELOPER:
LIVE OAK BANKING COMPANY
DAVID G. LUCHT, PRESIDENT
2605 IRON GATE DRIVE, SUITE 100
WILMINGTON, NC 28412
877-890-5867

APPLICANT/PREPARER OF PLAN:
NORRIS & TUNSTALL CONSULTING ENGINEERS, INC.
1127 FLORAL PARKWAY
SUITE 300/400
WILMINGTON, NC, 28403
PHONE (910) 343-9653
(910) 343-9604 FAX
LICENCE #C-3641

SURVEYOR:
HANOVER DESIGN SERVICES, P.A.
LAND SURVEYORS ENGINEERS LAND PLANNERS
1123 FLORAL PARKWAY
WILMINGTON, N.C. 28403
PHONE: 910 343-8002
FAX: 910 343-9941

SITE DATA

PARCEL ID#:	R06109-004-034-000
MAP ID#:	313609.15.2860.000
SITE ADDRESS:	1757 TIBURON DR.
LEGAL DESCRIPTION:	PARCEL B MAP BOOK 57 PAGE 388
PARCEL AREA:	10.66 AC (464,664 SF)
CURRENT ZONING:	O&I-1(CD)
NOT LOCATED WITH 100 YEAR FLOOD ZONE	
SOIL TYPES:	Le, Rm, Kr, Mu
CAMA LAND CLASSIFICATION: URBAN	

NORTHERN PROPERTY LINE FOR LIVE OAK BANK IS IN PROXIMITY TO A WETLANDS/CONSERVATION RESOURCE AREA AND IS SUBJECT TO A 50' NON RESIDENTIAL SETBACK PURSUANT TO MUNICODE SECTION 18-341.

HISTORICAL SITE:	NONE
CEMETARY:	NONE
FORESTED AREA:	SEE PLAN
WETLANDS:	NONE WITHIN SITE AREA
ENDANGERED SPECIES/HABITAT:	NONE REPORTED

NOTES:
1. THE ALDERMAN PRESERVE SIGNIFICANT NATURAL HERITAGE AREA AND FEDERAL AND STATE LISTED SPECIES OF CONCERN ARE PRESENT TO THE NORTH OF THIS PROJECT.

Approved Construction Plan

	Name	Date
Planning		
Traffic		
Fire		

SCALE: 1" = 50'
0 50 100 150

LIVE OAK BANK

LIVE OAK BANK
nCINO SOFTWARE
COMPANY
BUILDING 2

NORRIS & TUNSTALL
CONSULTING
ENGINEERS, P.C.
1127 FLORAL PARKWAY SUITE 400
WILMINGTON, NC 28403
PHONE (910) 343-9653
FAX (910) 343-9604
office@nkteng.com
licence #C-3641

LS3P
2528 INDEPENDENCE BLVD. SUITE 200
WILMINGTON, NORTH CAROLINA 28412
TEL. 910.790.9901 FAX 910.790.3111
WWW.LS3P.COM

NORTH CAROLINA PROFESSIONAL SEAL 19851 ENGINEER JOHN S. TUNSTALL

MEMBERS OF THE AMERICAN INSTITUTE OF ARCHITEC

COPYRIGHT 2013 ALL RIGHTS RESERVED
PRINTED OR ELECTRONIC DRAWINGS AND DOCUMENTATION MAY NOT BE REPRODUCED IN ANY FORM WITHOUT WRITTEN PERMISSION FROM LS3P ASSOCIATES LTD.

REVISIONS:

No.	Description	Date

PROJECT: 7101-126230
DATE: 06 NOV 2013
DRAWN BY: Author
CHECKED BY: Checker

SITE INVENTORY PLAN

I1

NT #13015

PERMIT SET

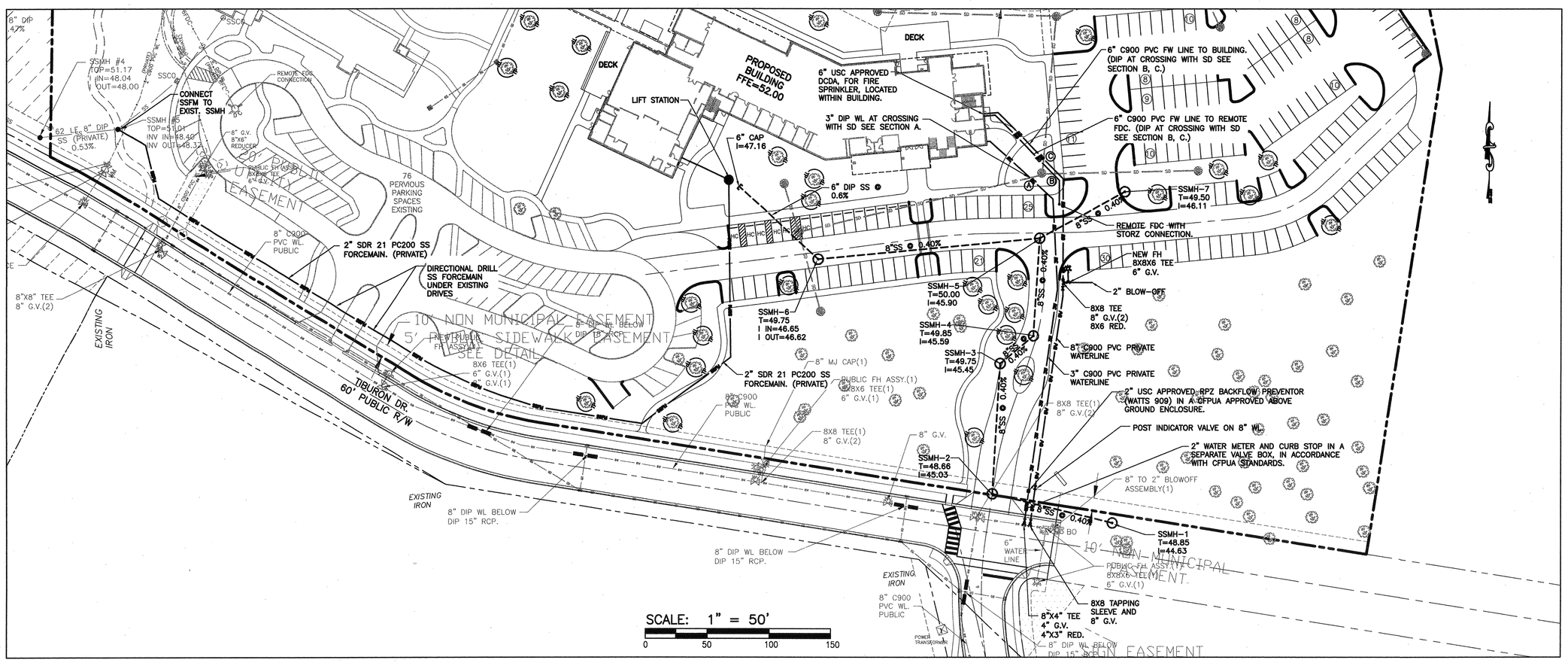

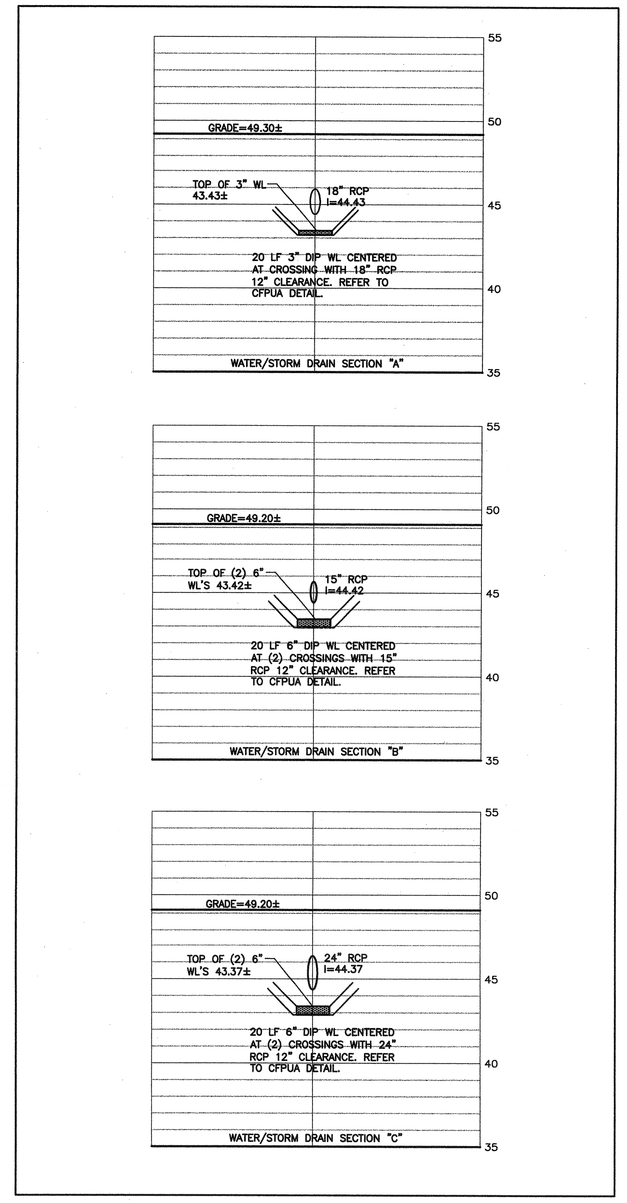

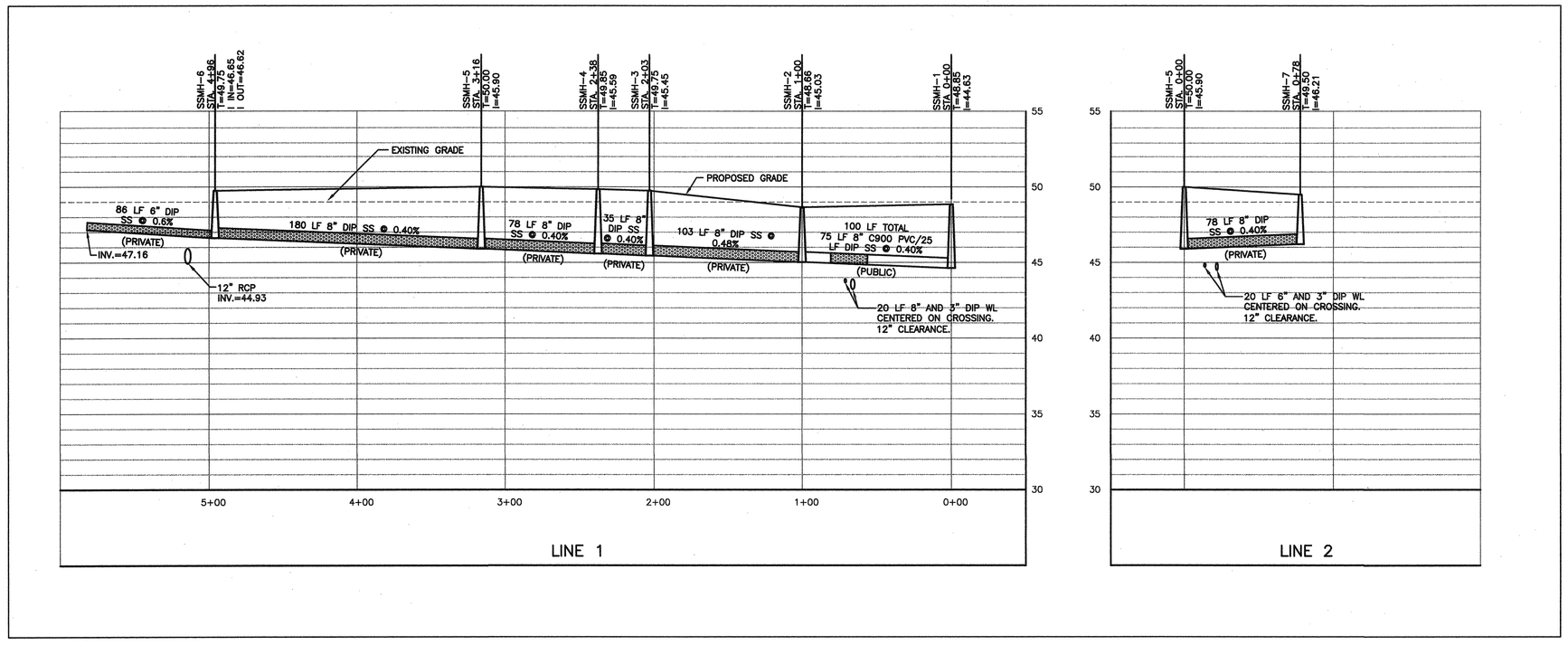

UTILITY NOTES:

1. LATERAL SEPARATION OF SEWERS AND WATER MAINS. WATER MAINS SHALL BE LAID AT LEAST 10 FEET LATERALLY FROM EXISTING OR PROPOSED SEWERS, UNLESS LOCAL CONDITIONS OR BARRIERS PREVENT A 10 FOOT LATERAL SEPARATION–IN WHICH CASE:

(A) THE WATER MAIN IS LAID IN A SEPARATE TRENCH, WITH THE ELEVATION OF THE BOTTOM OF THE WATER MAIN AT LEAST 18 INCHES ABOVE THE TOP OF THE SEWER; OR

(B) THE WATER MAIN IS LAID IN THE SAME TRENCH AS THE SEWER WITH THE WATER MAIN LOCATED AT ONE SIDE ON A BENCH OF UNDISTURBED EARTH, AND WITH THE ELEVATION OF THE BOTTOM OF THE WATER MAIN AT LEAST 18 INCHES ABOVE THE TOP OF THE SEWER.

2. CROSSING A WATER MAIN OVER A SEWER. WHENEVER IT IS NECESSARY FOR A WATER MAIN TO CROSS OVER A SEWER, THE WATER MAIN SHALL BE LAID AT SUCH AN ELEVATION THAT THE BOTTOM OF THE WATER MAIN IS AT LEAST 18 INCHES ABOVE THE TOP OF THE SEWER, UNLESS LOCAL CONDITIONS OR BARRIERS PREVENT AN 18 INCH VERTICAL SEPARATION–IN WHICH CASE BOTH THE WATER MAIN AND THE SEWER SHALL BE CONSTRUCTED OF FERROUS MATERIALS AND WITH JOINTS THAT ARE EQUIVALENT TO WATER MAIN STANDARDS FOR A DISTANCE OF 10 FEET ON EACH SIDE OF THE POINT OF CROSSING.

3. CROSSING A WATER MAIN UNDER A SEWER. WHENEVER IT IS NECESSARY FOR A WATER MAIN TO CROSS UNDER A SEWER, BOTH THE WATER MAIN AND THE SEWER SHALL BE CONSTRUCTED OF FERROUS MATERIALS AND WITH JOINTS EQUIVALENT TO WATER MAIN STANDARDS FOR A DISTANCE OF 10 FEET ON EACH SIDE OF THE POINT OF CROSSING. A SECTION OF WATER MAIN PIPE SHALL BE CENTERED AT THE POINT OF CROSSING.

4. THE FOLLOWING SHOULD BE FOLLOWED IN THE CASES OF GRAVITY SEWER UNDER STORM DRAIN:
- LESS THAN 12" OF SEPARATION BETWEEN STORM DRAIN AND GRAVITY SEWER, STORM DRAIN MUST BE BRIDGED.
- 12" TO 24" OF SEPARATION BETWEEN STORM DRAIN AND GRAVITY SEWER, GRAVITY SEWER CAN BE DIP OR STORM DRAIN CAN BE BRIDGED.
- GREATER THAN 24" OF SEPARATION BETWEEN STORM DRAIN AND GRAVITY SEWER NO BRIDGING OR DIP REQUIRED.

5. RESTRAINING/BLOCKING: THE PLUGS, CAPS, TEES AND BENDS DEFLECTING 22-1/2 DEGREES OR MORE EITHER VERTICALLY OR HORIZONTALLY ON WATER LINES 6 INCHES IN DIAMETER OF LARGER SHALL BE PROVIDED WITH THRUST BLOCKING OF "MEGALUG" RETAINER GLAND AT EACH JOINT, INSTALLED PER MANUFACTURER'S REQUIREMENTS.

CFPUA STANDARD NOTES:

1. SEWER GUARDS REQUIRED AT ALL MANHOLES. STAINLESS STEEL SEWER GUARDS REQUIRED AT MANHOLES LOCATED IN TRAFFIC AREAS.
2. WELLS IN CONFLICT ARE TO BE RELOCATED.
3. SERVICES SHALL BE PERPENDICULAR TO MAIN AND TERMINATE AT RIGHT OF WAY LINE. SERVICES IN CUL-DE-SAC ARE REQUIRED TO BE PERPENDICULAR, OR MUST ORIGINATE IN MANHOLE AND TERMINATE AT RIGHT OF WAY LINE.
4. ALL SERVICES TYING INTO DUCTILE IRON MAINS SHALL BE CONSTRUCTED OF CLASS 50, D.I.P. 401 PROTECTO CERAMIC LINED.
5. 10' UTILITIES EASEMENT IS PROVIDED ALONG THE FRONTAGE OF ALL LOTS AND AS SHOWN.
6. NO FLEXIBLE COUPLINGS SHALL BE USED.
7. ALL WATER AND SEWER MAINS OUTSIDE ROW WILL REQUIRE A UTILITY EASEMENT.
8. WATER METERS AND FIRST CLEAN-OUTS SHALL BE 18" MIN. INSIDE ROW/EASEMENT AS PER CFPUA DETAILS.

For each open utility cut of City streets, a $325 permit shall be required from the City prior to occupancy and/or project acceptance.

Approved Construction Plan

	Name	Date
Planning		
Traffic		
Fire		

NCDENR PWSS WATER PERMIT #: _____
WATER CAPACITY: _____ GPD
DWQ SEWER PERMIT #: _____
SEWER CAPACITY: _____ GPD
SEWER SHED # AND PLANT: _____
SEWER TO FLOW THROUGH NEI: YES or NO (CIRCLE ONE)

HORIZ. 1" = 50'
VERT. 1" = 5'

REV NO.	DESCRIPTION	DATE

REVISIONS

NORTH CAROLINA PROFESSIONAL SEAL 19851 ENGINEER JOHN S. TUNSTALL

Cape Fear Public Utility Authority
Stewardship Sustainability Service

NORRIS & TUNSTALL
CONSULTING ENGINEERS, INC.
1127 FLORAL PARKWAY SUITE 400 WILMINGTON, NC, 28403
PHONE (910) 343-9653 FAX (910) 343-9604 License #C-0520

LIVE OAK BANK
nCINO SOFTWARE COMPANY
BUILDING 2
1757 TIBURON DRIVE
WILMINGTON, N. C.

DATE: 11/6/13
SCALE: 1" = 50' 1" = 5'
DRAWN: NKS
CHECKED: JST
PROJECT NO: 13015

SHEET NO: PR1

F:\Projects\2013\13015 Live Oak Bank - Phase 2\13015 Plans\dwg\13015_master-6.dwg, 11/6/2013 2:42:26 PM

EXISTING CONDITIONS SURVEY

LIVE OAK BANK

PARCEL B TIBURON PARC

CITY OF WILMINGTON
NEW HANOVER COUNTY
NORTH CAROLINA

DATE: JULY 25, 2013

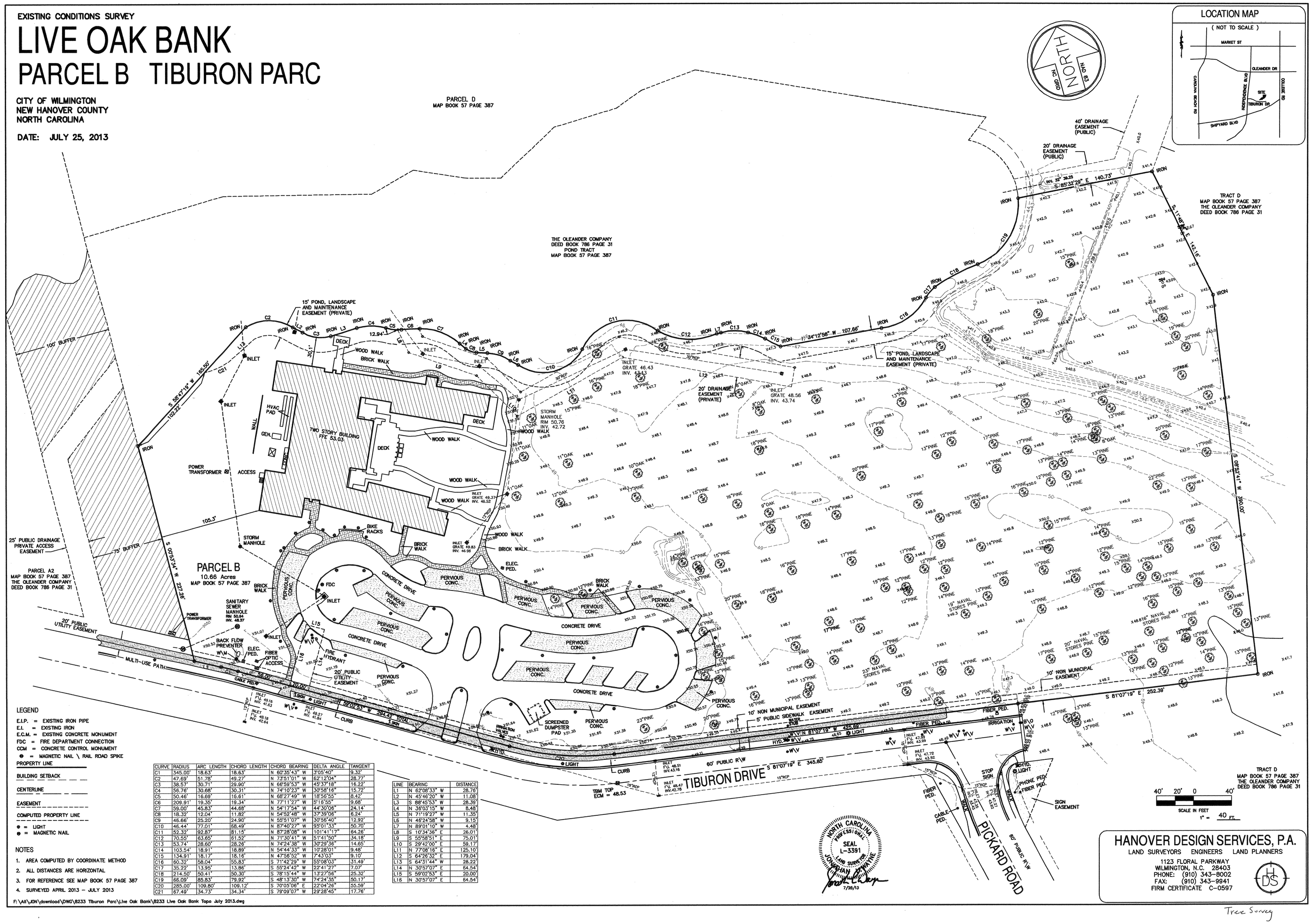

LEGEND

E.I.P. = EXISTING IRON PIPE
E.I. = EXISTING IRON
E.C.M. = EXISTING CONCRETE MONUMENT
FDC = FIRE DEPARTMENT CONNECTION
CCM = CONCRETE CONTROL MONUMENT
● = MAGNETIC NAIL \ RAIL ROAD SPIKE
PROPERTY LINE
BUILDING SETBACK
CENTERLINE
EASEMENT
COMPUTED PROPERTY LINE
● = LIGHT
● = MAGNETIC NAIL

NOTES

1. AREA COMPUTED BY COORDINATE METHOD
2. ALL DISTANCES ARE HORIZONTAL
3. FOR REFERENCE SEE MAP BOOK 57 PAGE 387
4. SURVEYED APRIL 2013 – JULY 2013

CURVE	RADIUS	ARC LENGTH	CHORD LENGTH	CHORD BEARING	DELTA ANGLE	TANGENT
C1	345.00'	18.63'	18.63'	N 60°35'43" W	3°05'40"	9.32'
C2	47.69'	51.78'	49.27'	N 73°51'01" W	62°12'04"	28.77'
C3	38.57'	30.71'	29.90'	N 66°59'53" W	45°37'18"	16.22'
C4	56.76'	30.68'	30.31'	N 74°10'23" W	30°58'16"	15.72'
C5	50.46'	16.69'	16.61'	N 68°27'49" W	18°56'55"	8.42'
C6	209.91'	19.35'	19.34'	N 77°11'27" W	5°16'55"	9.68'
C7	59.00'	45.83'	44.68'	N 54°17'54" W	44°30'08"	24.14'
C8	18.32'	12.04'	11.82'	N 54°52'48" W	37°39'08"	6.24'
C9	46.66'	25.20'	24.90'	N 55°51'07" W	30°56'40"	12.92'
C10	46.44'	77.01'	68.49'	N 87°40'27" W	95°01'33"	50.70'
C11	52.33'	92.87'	81.15'	N 87°28'08" W	101°41'17"	64.26'
C12	70.55'	63.65'	61.52'	N 71°30'41" W	51°41'50"	34.18'
C13	53.74'	28.60'	28.26'	N 74°24'38" W	30°29'36"	14.65'
C14	103.54'	18.91'	18.89'	N 54°44'33" W	10°28'01"	9.48'
C15	134.91'	18.17'	18.16'	N 47°56'52" W	7°43'03"	9.10'
C16	60.32'	58.04'	55.83'	S 71°42'29" W	55°08'03"	31.49'
C17	35.22'	13.95'	13.86'	S 55°24'42" W	22°41'27"	7.07'
C18	214.50'	50.41'	50.30'	S 78°15'44" W	13°27'56"	25.32'
C19	66.09'	85.83'	79.92'	S 48°13'30" W	74°24'35"	50.17'
C20	285.00'	109.80'	109.12'	S 70°03'06" E	22°04'26"	55.59'
C21	67.49'	34.73'	34.34'	S 79°09'07" W	29°28'45"	17.76'

LINE	BEARING	DISTANCE
L1	N 62°08'33" W	28.76'
L2	N 45°46'20" W	11.08'
L3	S 88°45'53" W	28.39'
L4	N 36°03'15" W	8.48'
L5	N 71°19'27" W	11.35'
L6	N 48°24'38" W	9.15'
L7	N 89°01'10" W	4.48'
L8	S 10°34'36" E	26.01'
L9	S 55°58'51" E	75.01'
L10	S 29°42'00" E	59.17'
L11	N 77°08'16" E	125.10'
L12	S 64°26'32" E	179.04'
L13	S 64°31'44" W	28.22'
L14	N 30°57'07" E	64.54'
L15	S 59°02'53" E	20.00'
L16	N 30°57'07" E	64.54'

F:\All\JON\download\DWG\8233 Tiburon Parc\Live Oak Bank\8233 Live Oak Bank Topo July 2013.dwg

Tree Survey