LOWER CAPE FEAR HOSPICE
6-BED ADDITION
WILMINGTON, NORTH CAROLINA

DESIGN DOCUMENTS
MAY 2013

PROJECT ADDRESS:
1406 PHYSICIANS DRIVE
WILMINGTON, NC 28401

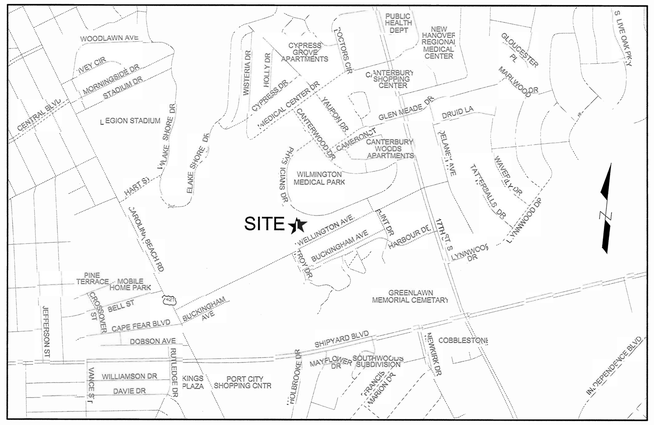

VICINITY MAP
SCALE: 1"=1000'

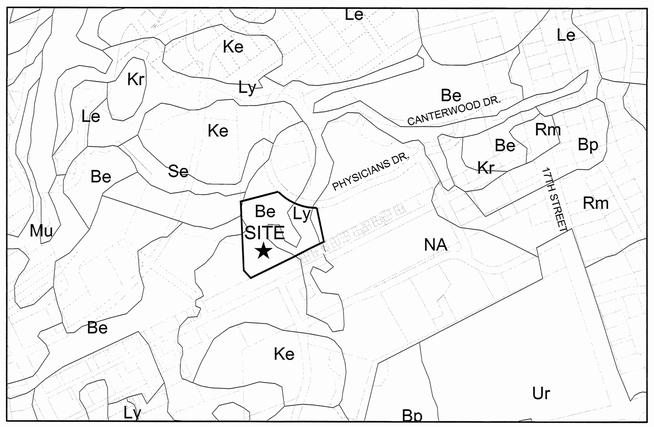

SOILS MAP
SCALE: 1"=500'

NCDENR PWSS WATER PERMIT #:	
WATER CAPACITY:	GPD
DWQ SEWER PERMIT #:	
SEWER CAPACITY:	GPD
SEWER SHED # AND PLANT:	
SEWER TO FLOW THROUGH NEI:	YES or NO (CIRCLE ONE)

For each open utility cut of City streets, a $325 permit shall be required from the City prior to occupancy and/or project acceptance.

CITY OF WILMINGTON NORTH CAROLINA
Public Services • Engineering Division
APPROVED STORMWATER MANAGEMENT PLAN
Date:_____ Permit #_____
Signed: _____

Approved Construction Plan

	Name	Date
Planning		
Traffic		
Fire		

NOTICE REQUIRED

ALL EXISTING UNDERGROUND UTILITIES SHALL BE PHYSICALLY LOCATED PRIOR TO THE BEGINNING OF ANY CONSTRUCTION IN THE VICINITY OF SAID UTILITIES.

CONTRACTORS SHALL NOTIFY OPERATORS WHO MAINTAIN UNDERGROUND UTILITY LINES IN THE AREA OF PROPOSED EXCAVATION AT LEAST TWO WORKING DAYS, BUT NOT MORE THAN TEN WORKING DAYS PRIOR TO COMMENCEMENT OF EXCAVATION OR DEMOLITION.

CONTACT "CAROLINA ONE CALL" AT
1-800-632-4949

CONTACT THESE UTILITIES

CITY OF WILMINGTON, DEVELOPMENT SERVICES
ATTN: DAWN SNOTHERLY
PH: 910-341-5815

PIEDMONT NATURAL GAS
ATTN: CARL PAQUET
PH: 910-350-2242

EMERGENCY DIAL 911
POLICE - FIRE - RESCUE

CAPE FEAR PUBLIC UTILITY AUTHORITY (WATER & SEWER)
ATTN: FRANK STYERS
PH: 910-332-6670

PROGRESS ENERGY
ATTN: KEVIN LEATHERWOOD
PH: 910-602-4304

BELL SOUTH
ATTN: STEVE DAYVAULT
PH: 910-392-8712

TIME WARNER CABLE
PH: 910-763-4638

OWNER:
LOWER CAPE FEAR HOSPICE & LIFE CARE CENTER
1406 PHYSICIANS DRIVE
WILMINGTON, NORTH CAROLINA 28401
ATTN: LAUREN L. BYSTROM (910) 772-5444

ENGINEER (CIVIL):
PARAMOUNTE ENGINEERING, INC.
5911 OLEANDER DRIVE, SUITE 201
WILMINGTON, NORTH CAROLINA 28403
ATTN: ROB BALLAND, P.E. (910) 791-6707

ARCHITECT:
LS3P & ASSOCIATES LTD.
2528 INDEPENDENCE BLVD., SUITE 200
WILMINGTON, NORTH CAROLINA 28412
ATTN: TAYLOR B. SIMMS AIA, LEED AP BD+C
(910) 790-9901

SHEET INDEX

SHEET NUMBER	SHEET TITLE
C-0.0	COVER SHEET
SV-1 - SV-2	EX. CONDITIONS SURVEY
C-1.0	GENERAL NOTES
C-1.1 - C-1.2	DEMOLITION PLAN
C-2.0	OVERALL SITE LAYOUT
C-2.1 - C-2.2	SITE & UTILITY LAYOUT
C-2.3	SITE INVENTORY MAP
C-3.0 - C-3.1	GRADING, DRAINAGE & EROSION CONTROL PLAN
C-5.0 - C5.1	LANDSCAPE PLAN
C-6.0 - C-6.4	DETAILS

PREPARED BY:
PARAMOUNTE ENGINEERING, INC.
5911 Oleander Drive, Suite 201
Wilmington, North Carolina 28403
(910) 791-6707 (O) (910) 791-6760 (F)
NC License #: C-2846
PROJECT # 12217.PE

FINAL DESIGN - NOT RELEASED FOR CONSTRUCTION

Lower Cape Fear Hospice & LifeCare Center

LOWER CAPE FEAR HOSPICE WILMINGTON CARE CENTER - SIX BED ADDITION 1406 PHYSICIANS DR.

LS3P

LS3P ASSOCIATES LTD.
2528 INDEPENDENCE BLVD. SUITE 200
WILMINGTON, NORTH CAROLINA 28412
TEL. 910.790.9901 FAX 910.790.3111
WWW.LS3P.COM

NORTH CAROLINA PROFESSIONAL SEAL 031561 ENGINEER ROBERT P. BALLAND

MEMBERS OF THE AMERICAN INSTITUTE OF ARCHITECTS

COPYRIGHT 2012 ALL RIGHTS RESERVED
PRINTED OR ELECTRONIC DRAWINGS AND DOCUMENTATION MAY NOT BE REPRODUCED IN ANY FORM WITHOUT WRITTEN PERMISSION FROM LS3P ASSOCIATES LTD.

REVISIONS:

No.	Description	Date

PROJECT: 12217.PE
DATE: MAY 1, 2013
DRAWN BY: RPB
CHECKED BY: RPB

COVER SHEET

C-0.0

SOLUTIONS THROUGH LISTENING
SERVICE BY DESIGN

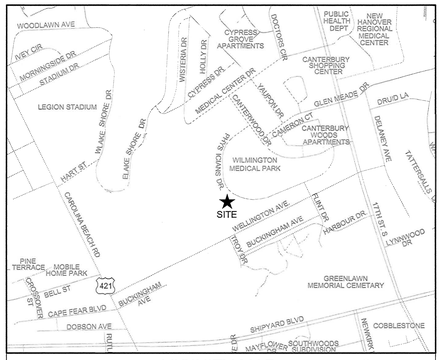

VICINITY MAP

SCALE: 1" = 500'

NORTH

SEE SHEET SV-2

PARAMOUNTE

ENGINEERING, INC

WILMINGTON, NC FAYETTEVILLE, NC

5911 Oleander Drive, Suite 201
Wilmington, North Carolina 28403
(910) 791-6707 (O) (910) 791-6760 (F)
NC License #: C-2846

Lower Cape Fear Hospice & LifeCareCenter

LOWER CAPE FEAR HOSPICE WILMINGTON CARE CENTER - SIX BED ADDITION 1406 PHYSICIANS DR.

LS3P

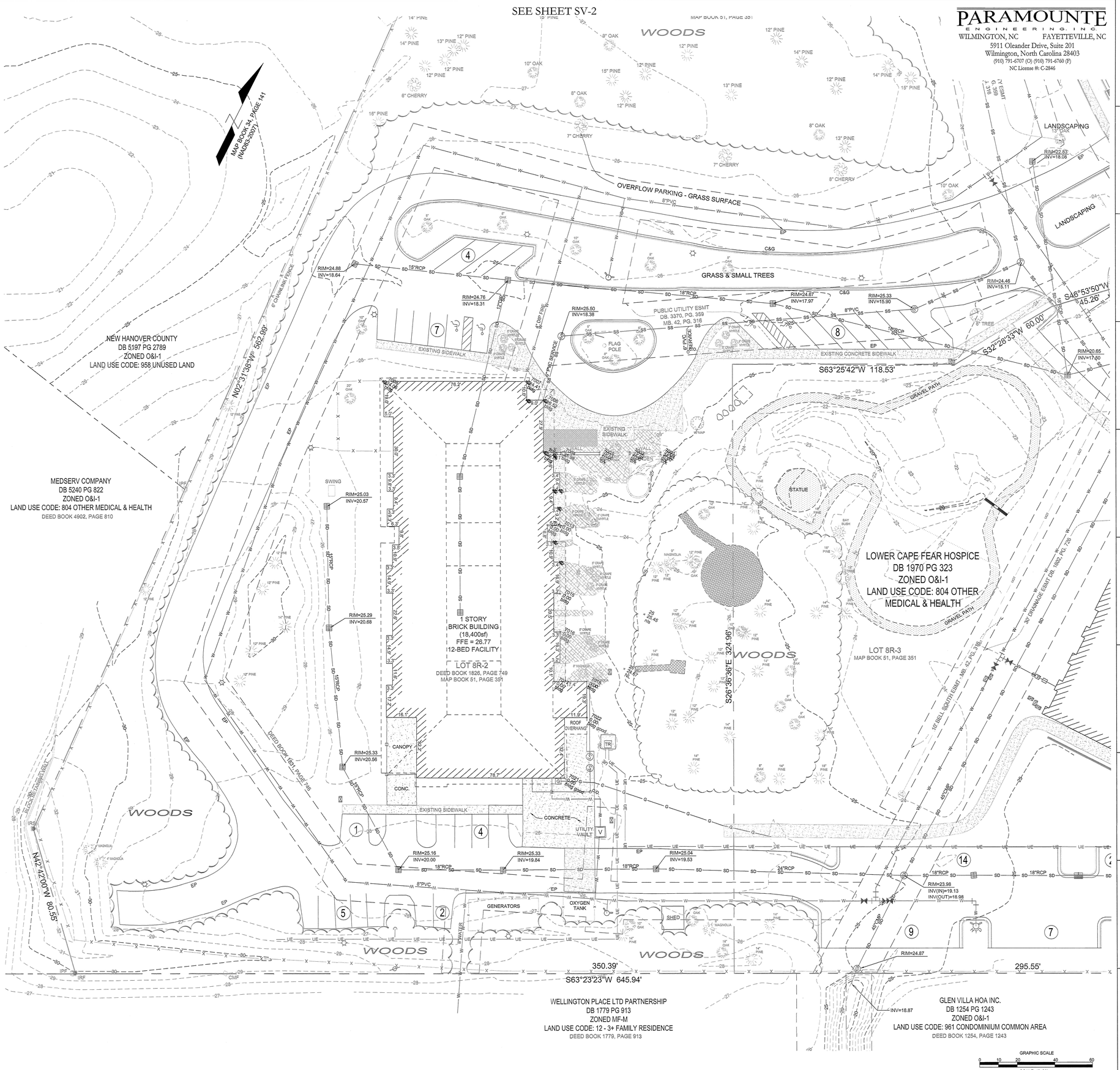

LEGEND:

IPF	IRON PIPE FOUND
IRF	IRON ROD FOUND
IRS	IRON ROD SET
	CONCRETE MONUMENT FOUND
	SIGN
C&G	CONCRETE CURB & GUTTER
EP	EDGE OF PAVEMENT
	LIGHT POLE
	UTILITY POLE
	GUY ANCHOR
TR	TRANSFORMER
	TELEPHONE RISER
	WATER METER
	WATER VALVE
	FIRE HYDRANT
	IRRIGATION VALVE
CO	CLEAN-OUT
	SANITARY SEWER MANHOLE
	STORM DRAINAGE MANHOLE
	CURB INLET
	CATCH BASIN
	GAS METER
OHE	OVERHEAD UTILITIES
UGT	BURIED TELEPHONE LINE
W	WATER LINE
SS	SANITARY SEWER LINE
SD	STORM DRAINAGE LINE
G	UNDERGROUND GAS LINE
X	CHAINLINK FENCE
	BRICK PAVING
	LANDSCAPED AREA

REFERENCES:

1. DEED BOOK

DEED BOOK	PAGE
1826	749
1831	746
1970	323
5643	271

2. MAP BOOK

MAP BOOK	PAGE
34	141
34	175
35	207
42	316

3. NEW HANOVER COUNTY PARCEL #: 3126-34-7646, 3126-34-6862, 3126-35-5297, 3126-34-9694

4. TAX PARCEL IDENTIFICATION #: R06014-005-007-000, R06014-005-010-000, R06015-001-017-000, R06014-005-011-000

NOTES:

1. HORIZONTAL DATUM- NAD83 (2001).
2. VERTICAL DATUM- NAVD 88, COUNTOUR INTERVAL IS 1-FOOT.
3. UTILITIES SHOWN ON THIS MAP WERE PLOTTED FROM VISIBLE INFORMATION IN THE FIELD AND PLANS PROVIDED BY OTHERS, OTHER UTILITIES NOT SHOWN ON THIS MAP MAY EXIST. PRIOR TO ANY LAND DISTURBING ACTIVITIES THE APPROPRIATE UTILITY COMPANIES MUST BE CONTACTED.
4. THIS PARCEL IS NOT LOCATED WITHIN A 100-YEAR FLOOD ZONE AS INDICATED ON FEMA FIRM PANEL NO. 3720312600J BEARING AN EFFECTIVE DATE OF APRIL 3, 2006.

LS3P ASSOCIATES LTD.
2528 INDEPENDENCE BLVD. SUITE 200
WILMINGTON, NORTH CAROLINA 28412
TEL. 910.790.9901 FAX 910.790.3111
WWW.LS3P.COM

NORTH CAROLINA PROFESSIONAL SEAL 3101 DAVID M. EDWARDS

MEMBERS OF THE AMERICAN INSTITUTE OF ARCHITECTS

COPYRIGHT 2012 ALL RIGHTS RESERVED
PRINTED OR ELECTRONIC DRAWINGS AND DOCUMENTATION MAY NOT BE REPRODUCED IN ANY FORM WITHOUT WRITTEN PERMISSION FROM LS3P ASSOCIATES LTD.

REVISIONS:

No.	Description	Date
1.	COW Planning Comments	3/5/13

PROJECT: 12217.PE
DATE: MAY 1, 2013
DRAWN BY: DME
CHECKED BY: DME

EXISTING CONDITIONS SURVEY

SV-1

SOLUTIONS THROUGH LISTENING

SERVICE BY DESIGN

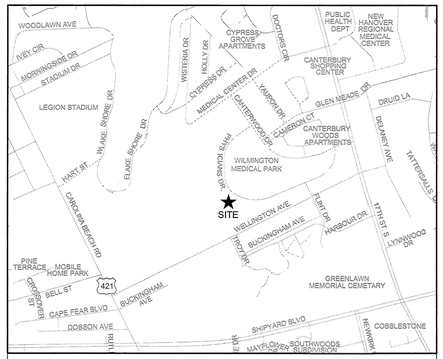

VICINITY MAP

SCALE: 1" = 500'

NORTH

PARAMOUNTE ENGINEERING, INC
WILMINGTON, NC FAYETTEVILLE, NC
5911 Oleander Drive, Suite 201
Wilmington, North Carolina 28403
(910) 791-6707 (O) (910) 791-6760 (F)
NC License #: C-2846

Lower Cape Fear Hospice & LifeCareCenter

LOWER CAPE FEAR HOSPICE WILMINGTON CARE CENTER - SIX BED ADDITION
1406 PHYSICIANS DR.

LS3P

LS3P ASSOCIATES LTD.
2528 INDEPENDENCE BLVD. SUITE 200
WILMINGTON, NORTH CAROLINA 28412
TEL. 910.790.9901 FAX 910.790.3111
WWW.LS3P.COM

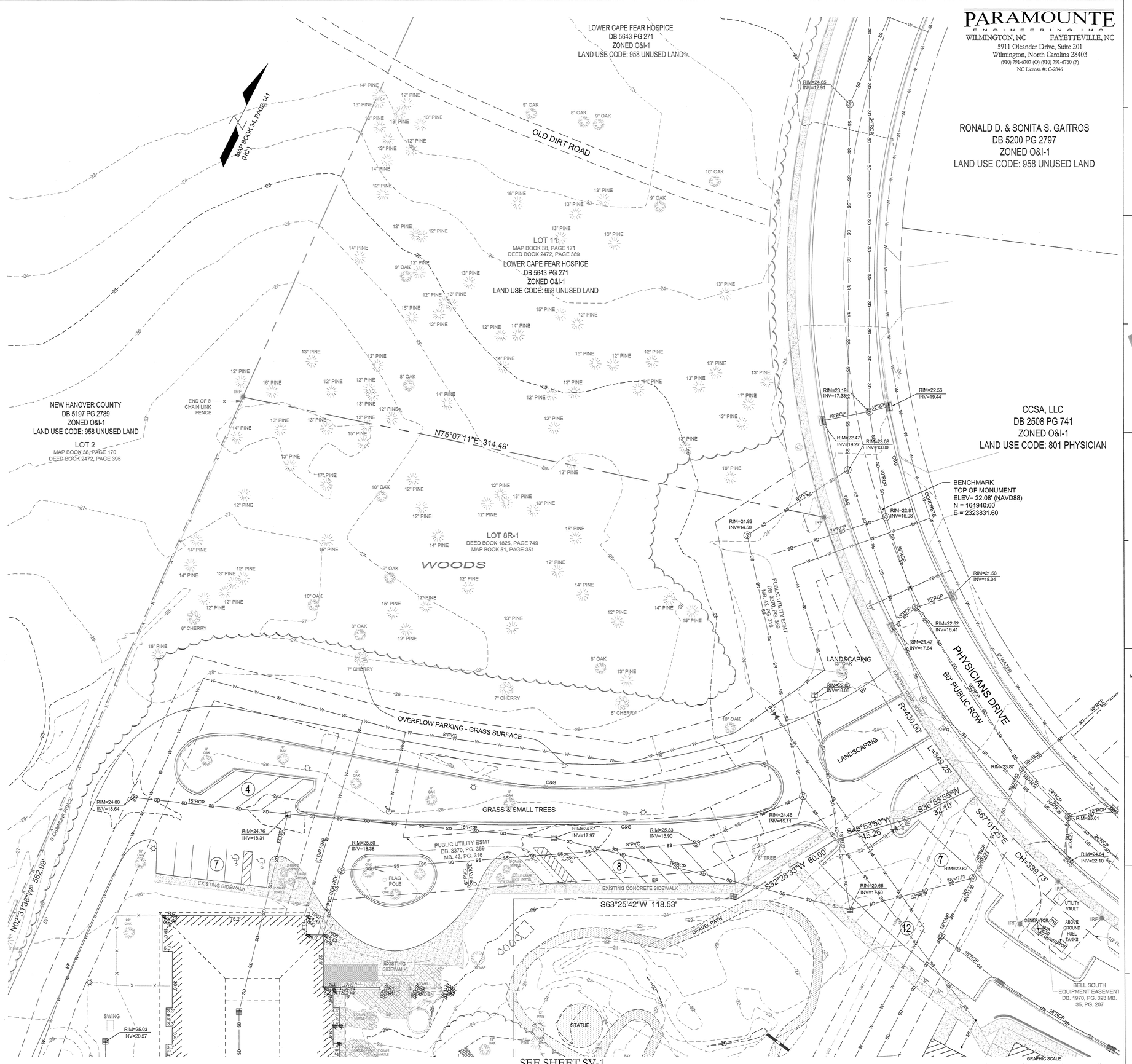

LEGEND:

IPF	IRON PIPE FOUND
IRF	IRON ROD FOUND
IRS	IRON ROD SET
	CONCRETE MONUMENT FOUND
	SIGN
C&G	CONCRETE CURB & GUTTER
EP	EDGE OF PAVEMENT
	LIGHT POLE
	UTILITY POLE
	GUY ANCHOR
	TRANSFORMER
	TELEPHONE RISER
	WATER METER
	WATER VALVE
	FIRE HYDRANT
	IRRIGATION VALVE
	CLEAN-OUT
	SANITARY SEWER MANHOLE
	STORM DRAINAGE MANHOLE
	CURB INLET
	CATCH BASIN
	GAS METER
OHE	OVERHEAD UTILITIES
UST	BURIED TELEPHONE LINE
W	WATER LINE
SS	SANITARY SEWER LINE
SD	STORM DRAINAGE LINE
G	UNDERGROUND GAS LINE
X	CHAINLINK FENCE
	BRICK PAVING
	LANDSCAPED AREA

REFERENCES:

1.

DEED BOOK	PAGE
1826	749
1831	746
1970	323
5643	271

2.

MAP BOOK	PAGE
34	141
34	175
35	207
42	316

3. NEW HANOVER COUNTY PARCEL #: 3126-34-7646, 3126-34-6862, 3126-35-5297, 3126-34-9694

4. TAX PARCEL IDENTIFICATION #: R06014-005-007-000, R06014-005-010-000, R06015-001-017-000, R06014-005-011-000

NOTES:

1. HORIZONTAL DATUM- NAD83 (2001).
2. VERTICAL DATUM- NAVD 88, COUNTOUR INTERVAL IS 1-FOOT.
3. UTILITIES SHOWN ON THIS MAP WERE PLOTTED FROM VISIBLE INFORMATION IN THE FIELD AND PLANS PROVIDED BY OTHERS, OTHER UTILITIES NOT SHOWN ON THIS MAP MAY EXIST. PRIOR TO ANY LAND DISTURBING ACTIVITIES THE APPROPRIATE UTILITY COMPANIES MUST BE CONTACTED.
4. THIS PARCEL IS NOT LOCATED WITHIN A 100-YEAR FLOOD ZONE AS INDICATED ON FEMA FIRM PANEL NO. 3720312600J BEARING AN EFFECTIVE DATE OF APRIL 3, 2006.

SEE SHEET SV-1

NORTH CAROLINA PROFESSIONAL SEAL 19301 DAVID M. EDWARDS

MEMBERS OF THE AMERICAN INSTITUTE OF ARCHITECTS

COPYRIGHT 2012 ALL RIGHTS RESERVED
PRINTED OR ELECTRONIC DRAWINGS AND DOCUMENTATION MAY NOT BE REPRODUCED IN ANY FORM WITHOUT WRITTEN PERMISSION FROM LS3P ASSOCIATES LTD.

REVISIONS:

No.	Description	Date
1.	COW Planning Comments	3/8/13

PROJECT: 12217.PE
DATE: MAY 1, 2013
DRAWN BY: DME
CHECKED BY: DME

EXISTING CONDITIONS SURVEY

SV-2

SOLUTIONS THROUGH LISTENING
SERVICE BY DESIGN

COORDINATION NOTES:

1. THE CONTRACTOR IS REQUIRED TO OBTAIN ANY/ALL PERMITS REQUIRED FOR CONSTRUCTION OF THESE PLANS.
2. ALL CONSTRUCTION TO BE IN ACCORDANCE WITH PERMITS ISSUED AND WITH THE CITY OF WILMINGTON, NEW HANOVER COUNTY, CAPE FEAR PUBLIC UTILITY AUTHORITY (CFPUA), AND THE STATE OF NORTH CAROLINA.
3. THE CONTRACTOR IS TO ESTABLISH AND CHECK ALL HORIZONTAL AND VERTICAL CONTROLS TO BE USED WITH THE PROJECT. IN ADDITION, THE CONTRACTOR IS TO COMPUTE THE LAYOUT OF THE ENTIRE SITE PLAN IN ADVANCE OF BEGINNING ANY WORK ASSOCIATED WITH THE SUBJECT PLANS. CONTRACTOR SHALL EMPLOY A PROFESSIONAL SURVEYOR TO PERFORM SITE IMPROVEMENT STAKEOUT(S).
4. ANYTIME WORK IS PERFORMED OFF-SITE OR WITHIN AN EXISTING EASEMENT, THE CONTRACTOR IS TO NOTIFY THE HOLDER OF SAID EASEMENT AS TO THE NATURE OF PROPOSED WORK, AND TO FOLLOW ANY GUIDELINES OR STANDARDS WHICH ARE ASSOCIATED WITH OR REFERENCED IN THE RECORDED EASEMENT.
5. CONTRACTOR SHALL REFER TO ARCHITECTURAL DRAWINGS BY OTHERS FOR ALL BUILDING DIMENSIONS AND DETAILS.

GENERAL NOTES:

1. EXISTING CONDITIONS AND TOPOGRAPHIC SURVEY COMPLETED BY PARAMOUNTE ENGINEERING, INC. THE SURVEY SHALL BE FIELD VERIFIED BY CONTRACTOR AND ANY DISCREPANCIES REPORTED TO THE OWNER, OWNERS REPRESENTATIVE AND/OR ENGINEER IMMEDIATELY.
2. REASONABLE CARE HAS BEEN EXERCISED IN SHOWING THE LOCATION OF EXISTING UTILITIES ON THE PLANS. THE EXACT LOCATION OF ALL EXISTING UTILITIES IS NOT KNOWN IN ALL CASES. THE CONTRACTOR SHALL EXPLORE THE AREA AHEAD OF DITCHING OPERATIONS BY OBSERVATIONS, ELECTRONIC DEVICES, HAND DIGGING AND BY PERSONAL CONTACT WITH THE UTILITY COMPANIES. IN ORDER TO LOCATE EXISTING UTILITIES IN ADVANCE OF TRENCHING OPERATIONS SO AS TO ELIMINATE OR MINIMIZE DAMAGE TO EXISTING UTILITIES. THE CONTRACTOR SHALL BE RESPONSIBLE FOR ALL COSTS RESULTING FROM ANY DAMAGE TO THE EXISTING UTILITY LINES INCLUDING LOSS OF UTILITY REVENUES. CONTRACTOR SHALL ARRANGE FOR TEMPORARY SUPPORT OF EXISTING UTILITIES, SUCH AS POLES, CONDUITS, FIBER OPTIC CABLES, TELEPHONE CABLES, WATER LINES, ETC.
3. CONTRACTOR SHALL COMPLY WITH THE LATEST REVISIONS AND INTERPRETATIONS OF THE DEPARTMENT OF LABOR SAFETY AND HEALTH REGULATIONS FOR CONSTRUCTION PROMULGATED UNDER THE OCCUPATIONAL SAFETY AND HEALTH ACT.
4. CONTRACTOR SHALL PLAN AND CONSTRUCT WORK SO AS TO CAUSE MINIMUM INCONVENIENCE TO THE OWNER AND THE PUBLIC. THE CONTRACTOR SHALL PROVIDE, ERECT AND MAINTAIN AT ALL TIMES DURING THE PROGRESS OR TEMPORARY SUSPENSION OF WORK, SUITABLE BARRIERS, FENCES, SIGNS OR OTHER ADEQUATE PROTECTION, INCLUDING FLAGMEN AND WATCHMEN AS NECESSARY TO INSURE THE SAFETY OF THE PUBLIC AS WELL AS THOSE ENGAGED IN THE CONSTRUCTION WORK. CONSTRUCTION SIGNING SHALL BE IN ACCORDANCE WITH THE LATEST EDITION OF "CONSTRUCTION AND MAINTENANCE OPERATIONS SUPPLEMENT TO THE MANUAL ON UNIFORM TRAFFIC CONTROL DEVICES" BY THE DOT.
5. ALL MATERIAL CLEARED OR DEMOLISHED BY THE CONTRACTOR IN ORDER TO CONSTRUCT THE WORK SHALL BECOME THE PROPERTY OF THE CONTRACTOR AND SHALL BE PROPERLY DISPOSED OF OFF-SITE.
6. ALL WORK BY THE CONTRACTOR SHALL BE WARRANTEED BY THE CONTRACTOR FOR A PERIOD OF ONE YEAR AFTER THE OWNER ACCEPTS THE WORK.
7. CONTRACTOR SHALL CALL THE NORTH CAROLINA ONE-CALL CENTER AT 1 (800) 632-4949 AN ALLOW THE CENTER TO LOCATE EXISTING UTILITIES BEFORE DIGGING.

DEMOLITION NOTES:

1. CONTRACTOR TO COORDINATE WITH THE OWNER TO PROPERLY MAINTAIN OR RELOCATE EXISTING SERVICE CONNECTIONS WHEN NECESSARY.
2. CONTRACTOR IS TO WALK THE SITE AND BECOME FAMILIAR WITH THE SCOPE OF DEMOLITION REQUIRED. ALL DEMOLITION WORK REQUIRED TO CONSTRUCT NEW SITE IMPROVEMENTS WILL BE PERFORMED BY THE CONTRACTOR AND WILL BE CONSIDERED UNCLASSIFIED EXCAVATION.
3. DEMOLITION SHALL INCLUDE BUT IS NOT LIMITED TO THE EXCAVATION, HAULING AND OFFSITE DISPOSAL OF CONCRETE PADS, CONCRETE DITCHES, FOUNDATIONS, SLABS, STEPS, AND STRUCTURES; ABANDONED UTILITIES, BUILDINGS, PAVEMENTS AND ALL MATERIALS CLEARED AND STRIPPED TO THE EXTENT NECESSARY AS DIRECTED BY THE SOILS ENGINEER FOR THE INSTALLATION OF THE NEW IMPROVEMENTS AND WITHIN THE LIMITS OF CLEARING AND GRADING AND AS SHOWN ON THESE PLANS.
4. THE CONTRACTOR SHALL PROTECT ALL ADJACENT PROPERTY, STRUCTURES AND UTILITIES ON THE PROPERTY NOT TO BE DEMOLISHED. DAMAGE TO PROPERTIES OF OTHERS DUE TO THE CONTRACTOR'S ACTIVITIES SHALL BE REPLACED IN KIND BY THE CONTRACTOR AT NO COST TO OWNER.
5. ELECTRIC, TELEPHONE, SANITARY SEWER, WATER AND STORM SEWER UTILITIES THAT SERVICE OFF-SITE PROPERTIES SHALL BE MAINTAINED DURING THE CONSTRUCTION PROCESS BY THE CONTRACTOR.
6. THE CONTRACTOR SHALL PRODUCE A PHOTOGRAPHIC RECORD (DIGITAL) OF DEVELOPMENT COMMENCING WITH A RECORD OF THE SITE AS IT APPEARS BEFORE DEMOLITION HAS BEGUN. AFTERWARDS, A PHOTOGRAPHIC RECORD SHALL BE MAINTAINED WEEKLY DURING CONSTRUCTION AND ENDING WITH A PHOTOGRAPHIC RECORD OF THE DEVELOPMENT AS IT APPEARS AFTER DEMOLITION. THIS RECORD SHALL BE DELIVERED TO THE OWNER.
7. EXISTING CURB AND GUTTER, LIGHTS, SIDEWALK, AND UTILITIES NOT INTENDED FOR DEMOLITION SHALL BE MAINTAINED, PROTECTED AND UNDISTURBED DURING DEMOLITION.
8. ALL EXISTING IMPROVEMENTS INDICATED OR REQUIRED TO BE DEMOLISHED SHALL INCLUDE REMOVAL FROM THE PROPERTY AND PROPER DISPOSAL.
9. CONTRACTOR SHALL COORDINATE RELOCATION OF ALL EXISTING OVERHEAD AND UNDERGROUND UTILITIES INCLUDING CABLE, GAS, TELEPHONE AND ELECTRIC AND ANY OTHER UTILITIES THROUGH THE SITE WITH THE RESPECTIVE COMPANIES.
10. PROVIDE SMOOTH SAW CUT OF EXISTING PAVEMENTS, CURBS AND GUTTERS AND SIDEWALKS TO BE DEMOLISHED.
11. ALL DEMOLITION WORK SHALL BE DONE IN STRICT ACCORDANCE WITH LOCAL, STATE AND FEDERAL REGULATIONS AS WELL AS OSHA REGULATIONS.
12. EXISTING FIRE HYDRANTS ARE TO REMAIN IN SERVICE.
13. INFORMATION CONCERNING UNDERGROUND UTILITIES WAS OBTAINED FROM AVAILABLE RECORDS, BUT THE CONTRACTOR MUST DETERMINE THE EXACT LOCATION AND ELEVATIONS OF THE MAINS BY DIGGING TEST PITS BY HAND.

TRAFFIC NOTES:

1. ALL PAVEMENT MARKINGS IN PUBLIC RIGHTS-OF-WAY & FOR DRIVEWAY(S) ARE TO BE THERMOPLASTIC & MEET CITY AND/OR NCDOT STANDARDS.
2. TRAFFIC CONTROL DEVICES (INCLUDING SIGNS AND PAVEMENT MARKINGS) IN AREAS OPEN TO PUBLIC TRAFFIC ARE TO MEET MUTCD (MANUAL ON UNIFORM TRAFFIC CONTROL DEVICES) STANDARDS.
3. ALL TRAFFIC CONTROL SIGNS AND MARKINGS NOT WITHIN THE PUBLIC RIGHT-OF-WAY ARE TO BE MAINTAINED BY THE PROPERTY OWNER IN ACCORDANCE WITH MUTCD STANDARDS.
4. ALL PARKING STALL MARKINGS AND LANE ARROWS WITHIN THE PARKING AREAS SHALL BE WHITE.
5. ANY OPEN CUTTING OF A CITY STREET REQUIRES A UTILITY CUT PERMIT. CONTACT 341-5888 FOR MORE DETAILS. IN CERTAIN CASES, AN ENTIRE RESURFACING OF THE AREA BEING OPEN CUT MAY BE REQUIRED.
6. CONTACT TRAFFIC ENGINEERING, AT 341-7888 TO ENSURE THAT ALL TRAFFIC SIGNAL FACILITIES AND EQUIPMENT ARE SHOWN ON THE PLAN. CALL TRAFFIC ENGINEERING FORTY-EIGHT (48) HOURS PRIOR TO ANY EXCAVATION IN THE R/W.
7. ANY BROKEN OR MISSING SIDEWALK PANELS, DRIVEWAY PANELS AND/OR CURBING SHALL BE REPLACED.
8. TACTILE WARNING MATS TO BE INSTALLED AT ALL WHEELCHAIR RAMPS.
9. A LANDSCAPING PLAN, INDICATING THE LOCATION OF REQUIRED STREET- YARD PLANTINGS SHALL BE PROVIDED FOR REVIEW OF SIGHT DISTANCES AND ANY OTHER REQUIREMENTS OF TRAFFIC ENGINEERING.
10. ALL SIGNS AND PAVEMENT MARKINGS IN AREAS OPEN TO PUBLIC TRAFFIC ARE TO MEET MUTCD STANDARDS.

EROSION CONTROL AND SEQUENCE OF CONSTRUCTION NOTES:

NOTE: THESE EROSION CONTROL AND SEQUENCE OF CONSTRUCTION NOTES ARE INTENDED FOR EACH "PHASE" OF CONSTRUCTION. THE ORDER AND STEPS TAKEN MUST BE IMPLEMENTED AS EACH PART OF THE PROJECT IS DEVELOPED; WHETHER AS A WHOLE OR IN PHASES. ANY EROSION CONTROL DEVICES/MEASURES MUST REMAIN IN PLACE UNTIL THE ENTIRE BASIN DESIGNED TO HANDLE SEDIMENTATION AND EROSION IS STABILIZED AND ALL IMPROVEMENTS WITHIN THE BASIN ARE COMPLETE.

1. CONSTRUCT TEMPORARY GRAVEL CONSTRUCTION ENTRANCE(S), ESTABLISH THE LIMITS OF DISTURBANCE, AND TEMPORARY SILT FENCE.
2. CLEAR AND REMOVE FROM SITE ALL TREES (ONLY ONES TO BE REMOVED), ROOTS, ROOT MAT, ETC. FROM THE AREA WITHIN THE DESIGNATED CLEARING LIMITS.
3. INSTALL REMAINING EROSION CONTROL MEASURES AS SHOWN ON THE PLANS WITHIN THE AREA DISTURBED. ALL EROSION CONTROL MEASURES MUST BE INSTALLED BEFORE COMMENCING CONSTRUCTION.
4. PLANT GRASS OVER ALL GRADED AREAS WITHIN 15 WORKING DAYS OF CEASE OF ANY GRADING ACTIVITY.
5. IMMEDIATELY UPON THE INSTALLATION OF ANY STORM DRAINAGE CATCH BASIN, DROP INLET, ETC., THE CONTRACTOR SHALL INSTALL INLET PROTECTION TO STOP ANY SEDIMENT FROM ENTERING THE DRAINAGE SYSTEM.
6. IMMEDIATELY UPON THE INSTALLATION OF ANY STORM DRAINAGE SYSTEM, THE CONTRACTOR SHALL INSTALL OUTLET PROTECTION AS SHOWN ON THE PLANS AND DETAILS.
7. THE CONTRACTOR SHALL BE RESPONSIBLE FOR CLEANING AND RESTORING TO PRE-CONSTRUTION CONDITIONS ANY AREAS OUTSIDE THE PROJECT LIMITS THAT MAY INADVERTENTLY BE DAMAGED DUE TO THE FAILURE OF THE EROSION CONTROL MEASURES.
8. DURING GRADING AND AFTER GRADING HAS BEEN COMPLETED, THE CONTRACTOR SHALL CONTINUE TO MAINTAIN PERMANENT AND TEMPORARY EROSION CONTROL MEASURES UNTIL FINAL INSPECTION AND APPROVAL BY NEW HANOVER COUNTY.
9. UPON RECEIVING FINAL INSPECTION AND APPROVAL BY NEW HANOVER COUNTY, THE CONTRACTOR CAN REMOVE TEMPORARY EROSION CONTROL MEASURES.
10. THE CONTRACTOR SHALL CONTINUE TO WATER, FERTILIZE, MOW AND MAINTAIN SPRIGGED, SODDED, AND PLANTED AREAS UNTIL ALL CONSTRUCTION IS COMPLETE.

GENERAL EROSION AND SEDIMENT CONTROL NOTES:

1. THE EROSION CONTROL PLAN SHALL INCLUDE PROVISIONS FOR GROUNDCOVER ON ALL EXPOSED PERIMETER DIKES, SWALES, DITCHES, PERIMETER SLOPES AND ALL SLOPES STEEPER THAN 3:1 WITHIN 7 CALENDAR DAYS FROM THE LAST LAND DISTURBING ACTIVITY. GROUND COVER SHALL BE PROVIDED ON ALL OTHER DISTURBED AREAS WITHIN 14 CALENDAR DAYS FROM THE LAST LAND DISTURBING ACTIVITY.
2. UNLESS OTHERWISE INDICATED, ALL VEGETATIVE AND STRUCTURAL EROSION AND SEDIMENT CONTROL MEASURES SHALL BE CONSTRUCTED AND MAINTAINED IN ACCORDANCE WITH THE MINIMUM STANDARDS AND SPECIFICATIONS OF THE NORTH CAROLINA EROSION AND SEDIMENT CONTROL HANDBOOK. (NO SEPARATE PAYMENT).
3. THE CONTRACTOR SHALL NOTIFY PLAN APPROVING AUTHORITY ONE WEEK PRIOR TO THE PRE-CONSTRUCTION CONFERENCE, ONE WEEK PRIOR TO THE COMMENCEMENT OF LAND DISTURBING ACTIVITY, AND ONE WEEK PRIOR TO FINAL INSPECTION.
4. ALL EROSION AND SEDIMENT CONTROL MEASURES ARE TO BE PLACED PRIOR TO CLEARING AND/OR LAND DISTURBANCE.
5. A COPY OF THE APPROVED EROSION AND SEDIMENT CONTROL PLAN AND PERMIT SHALL BE MAINTAINED ON THE SITE AT ALL TIMES.
6. PRIOR TO COMMENCING LAND DISTURBING ACTIVITIES IN AREAS OTHER THAN INDICATED ON THESE PLANS (INCLUDING, BUT NOT LIMITED TO OFF-SITE BORROW OR WASTE AREAS STAGING OR STORAGE AREAS), THE CONTRACTOR SHALL PREPARE AND SUBMIT A SUPPLEMENTARY EROSION CONTROL PLAN TO THE OWNER FOR REVIEW AND TO NEW HANOVER COUNTY FOR APPROVAL. CONTRACTOR SHALL PAY ALL FEES REQUIRED AND SHALL INSTALL NECESSARY MEASURES AT NO SEPARATE PAYMENT. THE CONTRACTOR SHALL PROVIDE THE OWNER AND THE ENGINEER A COPY OF THE AMENDED PERMIT.
7. THE CONTRACTOR IS RESPONSIBLE FOR INSTALLATION OF ANY ADDITIONAL EROSION CONTROL MEASURES NECESSARY TO PREVENT EROSION AND SEDIMENTATION AS DETERMINED BY EITHER THE REVIEWING AGENCY OR THE ENGINEER. (NO SEPARATE PAYMENT).
8. ALL DISTURBED AREAS ARE TO DRAIN TO APPROVED SEDIMENT CONTROL MEASURES AT ALL TIMES DURING LAND DISTURBING ACTIVITIES AND DURING SITE DEVELOPMENT UNTIL FINAL STABILIZATION IS ACHIEVED.
9. ALL AREAS DISTURBED BY CONSTRUCTION UNLESS OTHERWISE IMPROVED SHALL BE SODDED OR SEEDED AS INDICATED AND STABILIZED.
10. DURING DEWATERING OPERATIONS, WATER SHALL BE PUMPED INTO AN APPROVED FILTERING DEVICE PRIOR TO DISCHARGE TO RECEIVING OUTLET.

GENERAL EROSION AND SEDIMENT CONTROL NOTES (CONT.):

11. THE CONTRACTOR SHALL INSPECT ALL EROSION CONTROL MEASURES PERIODICALLY AND AFTER EACH RUNOFF-PRODUCING EVENT. ANY NECESSARY REPAIRS OR CLEANUP TO MAINTAIN THE EFFECTIVENESS OF THE EROSION CONTROL DEVICES SHALL BE MADE IMMEDIATELY.
12. ALL TEMPORARY EROSION CONTROL MEASURES SHALL BE REMOVED BY CONTRACTOR ONCE STABILIZATION OR A SUFFICIENT GROUND COVER HAS BEEN ESTABLISHED OR AS DIRECTED BY THE ENGINEER. (NO SEPARATE PAYMENT). NCDENR'S FINAL APPROVAL IS REQUIRED.
13. TEMPORARY GRAVEL CONSTRUCTION ENTRANCE SHALL BE REQUIRED AT ALL CONSTRUCTION STAGING AREA ENTRANCES AND ALL CONSTRUCTION ACCESS LOCATIONS INTO NON-PAVED AREA. (NO SEPARATE PAYMENT).
14. WHEN CROSSING CREEK OR DRAINAGE-WAY, THE DIVISION OF WATER QUALITY SHALL BE CONTACTED PRIOR TO DISTURBING A CREEK. THE CONTRACTOR SHALL INSTALL RIP-RAP WITH FABRIC ALONG DISTURBED BANKS AND CHANNEL AND RESTORE SLOPES TO ORIGINAL CONTOURS, BUT NOT STEEPER THAN 2:1 MAXIMUM. DISTURBED CREEK AREA SHALL BE STABILIZED IMMEDIATELY.

MAINTENANCE PLAN:

1. ALL EROSION AND SEDIMENT CONTROL PRACTICES WILL BE CHECKED FOR STABILITY AND OPERATION FOLLOWING EVERY RUNOFF-PRODUCING RAINFALL BUT IN NO CASE LESS THAN ONCE EVERY WEEK. ANY NEEDED REPAIRS WILL BE MADE IMMEDIATELY TO MAINTAIN ALL PRACTICES AS DESIGNED.
2. ALL CONSTRUCTION ENTRANCES WILL BE PERIODICALLY TOP DRESSED WITH AN ADDITIONAL 2 INCHES OF #4 STONE TO MAINTAIN PROPER DEPTH. ANY SEDIMENT THAT IS TRACKED INTO THE STREET WILL BE IMMEDIATELY REMOVED.
3. SEDIMENT WILL BE REMOVED BEHIND THE SEDIMENT FENCE WHEN IT BECOMES 0.5 FEET DEEP AT THE FENCE. THE SEDIMENT FENCE WILL BE BE REPAIRED AS NECESSARY TO MAINTAIN A BARRIER. SILT FENCE STAKES WILL BE SPACED 6 FEET APART UNLESS A WIRE BACKING IS USED WITH 8 FOOT STAKE SPACING.
4. ALL SEEDED AREAS WILL BE FERTILIZED, RESEEDED AS NECESSARY, AND MULCHED ACCORDING TO SPECIFICATIONS IN THE VEGETATIVE PLAN TO MAINTAIN A VIGOROUS, DENSE VEGETATIVE COVER.
5. INLET PROTECTION - INSPECT WIRE AND ROCK INLET PROTECTION AT LEAST ONCE A WEEK AND AFTER EACH SIGNIFICANT (½ INCH OR GREATER) RAINFALL EVENT AND REPAIR IMMEDIATELY. REMOVE SEDIMENT AND RESTORE THE SEDIMENT STORAGE AREA TO ITS ORIGINAL DIMENSIONS WHEN THE SEDIMENT HAS ACCUMULATED TO ONE-HALF THE DESIGN DEPTH OF THE TRAP. PLACE THE SEDIMENT THAT IS REMOVED IN THE DESIGNATED DISPOSAL AREA AND REPLACE THE CONTAMINATED PART OF THE GRAVEL FACING.

PERMANENT SEEDING SCHEDULE - MIXTURE 5CP

Seeding Mixture

SPECIES	RATE (LB/ACRE)
CENTIPEDE GRASS	10-20

Seeding Dates

MARCH - JUNE

Soil Amendments

APPLY LIME AND FERTILIZER ACCORDING TO SOIL TESTS, OR APPLY 300 LB/ACRE 10-10-10 FERTILIZER.

Mulch

DO NOT MULCH.

Maintenance

FERTILIZE VERY SPARINGLY--20 LB/ACRE NITROGEN IN SPRING WITH NO PHOSPHORUS. CENTIPEDE GRASS CANNOT TOLERATE HIGH PH OR EXCESS FERTILIZER.

TEMPORARY SEEDING-LATE WINTER/EARLY SPRING

Seeding Mixture

WINTER AND EARLY SPRING

SPECIES	RATE (LB/ACRE)
RYE (GRAIN)	120
ANNUAL LESPEDEZA (KOBE IN PIEDMONT AND COASTAL PLAIN, KOREAN IN MOUNTAINS)	50

OMIT ANNUAL LESPEDEZA WHEN DURATION OF TEMPORARY COVER IS NOT TO EXTEND BEYOND JUNE.

SUMMER

SPECIES	RATE (LB/ACRE)
GERMAN MILLET	40

FALL

SPECIES	RATE (LB/ACRE)
RYE (GRAIN)	120

Seeding dates

COASTAL PLAIN - DEC.1-APR. 15 - LATE WINTER AND EARLY SPRING
APRIL 15 - AUG. 15 - SUMMER
AUG. 15 - DEC. 30 - FALL

Soil amendments

FOLLOW RECOMMENDATIONS OF SOIL TESTS OR APPLY 2,000 LB/ACRE GROUND AGRICULTURAL LIMESTONE AND 750 LB/ACRE 10-10-10 FERTILIZER.

Mulch

APPLY 4,000 LB/ACRE STRAW. ANCHOR STRAW BY TACKING WITH ASPHALT, NETTING OR A MULCH ANCHORING TOOL. A DISK WITH BLADES SET NEARLY STRAIGHT CAN BE USED AS A MULCH ANCHORING TOOL.

Maintenance

REFERTILIZE IF GROWTH IS NOT FULLY ADEQUATE. RESEED, REFERTILIZE AND MULCH IMMEDIATELY FOLLOWING EROSION OR OTHER DAMAGE.

SITE NOTES :

1. ANY DISCREPANCY IN THIS PLAN AND ACTUAL FIELD CONDITIONS SHALL BE REPORTED TO THE OWNER PRIOR TO START OF CONSTRUCTION. GENERAL CONTRACTOR SHALL BE RESPONSIBLE FOR VERIFICATION OF ALL SETBACKS, EASEMENTS AND DIMENSIONS SHOWN HEREON BEFORE BEGINNING CONSTRUCTION.
2. CONTRACTOR SHALL MAINTAIN THE SITE IN A MANNER SO THAT WORKMEN AND PUBLIC SHALL BE PROTECTED FROM INJURY, AND ADJOINING PROPERTY PROTECTED FROM DAMAGE.
3. ACCESS TO UTILITIES, FIRE HYDRANTS, STREET LIGHTING, ETC., SHALL REMAIN UNDISTURBED, UNLESS COORDINATED WITH THE RESPECTIVE UTILITY.
4. DO NOT SCALE THIS DRAWING AS IT IS A REPRODUCTION AND SUBJECT TO DISTORTION.
5. THE GENERAL CONTRACTOR SHALL REMOVE ALL DEBRIS FROM THE SITE UPON COMPLETION OF THE PROJECT AND AT LEAST ONCE A WEEK DURING CONSTRUCTION.
6. THE GENERAL CONTRACTOR SHALL KEEP THE AREA OUTSIDE THE "CONSTRUCTION LIMITS" BROOM CLEAN AT ALL TIMES.
7. ALL UTILITIES TO SERVICE PROPOSED STRUCTURE SHALL BE UNDERGROUND ON SITE.
8. ALL STREET SURFACES, DRIVEWAYS, CULVERTS, CURB AND GUTTERS, ROADSIDE DRAINAGE DITCHES AND OTHER STRUCTURES THAT ARE DISTURBED OR DAMAGED IN ANY MANNER AS A RESULT OF CONSTRUCTION SHALL BE REPLACED OR REPAIRED IN ACCORDANCE WITH THE SPECIFICATIONS.
9. CONTRACTOR SHALL MAINTAIN AN "AS-BUILT" SET OF DRAWINGS TO RECORD THE EXACT LOCATION OF ALL PIPING PRIOR TO CONCEALMENT. DRAWINGS SHALL BE GIVEN TO THE OWNER UPON COMPLETION OF THE PROJECT WITH A COPY OF THE TRANSMITTAL LETTER TO THE ENGINEER.
10. IF DEPARTURES FROM THE SPECIFICATIONS OR DRAWINGS ARE DEEMED NECESSARY BY THE CONTRACTOR, DETAILS OF SUCH DEPARTURES AND REASONS THEREOF SHALL BE GIVEN TO THE OWNER FOR REVIEW, NO DEPARTURES FROM THE CONTRACT DOCUMENT SHALL BE MADE WITHOUT THE PERMISSION OF THE OWNER, THE CITY OF WILMINGTON, NEW HANOVER COUNTY, OR CFPUA, RESPECTIVELY.
11. CONTRACTOR SHALL VERIFY LOCATION AND ELEVATION OF ALL UNDERGROUND UTILITIES. THE LOCATION OF ALL EXISTING UTILITIES ARE NOT NECESSARILY SHOWN ON PLANS AND WHERE SHOWN ARE ONLY APPROXIMATE. THE CONTRACTOR SHALL ON HIS INITIATIVE AND AT NO EXTRA COST HAVE LOCATED ALL UNDERGROUND LINES AND STRUCTURES AS NECESSARY. NO CLAIMS FOR DAMAGES OR EXTRA COMPENSATION SHALL ACCRUE TO THE CONTRACTOR FROM THE PRESENCE OF SUCH PIPE OTHER OBSTRUCTIONS OR FROM DELAY DUE TO REMOVAL OR REARRANGEMENT OF THE SAME. THE CONTRACTOR SHALL BE RESPONSIBLE FOR ANY DAMAGE TO UNDERGROUND STRUCTURES. CONTACT NORTH CAROLINA ONE CALL" TOLL FREE 1-800-632-4949 AT LEAST 48 HOURS PRIOR TO CONSTRUCTION. THE CONTRACTOR IS RESPONSIBLE FOR CONTACTING ALL NONSUBSCRIBING UTILITIES.
12. THE CONTRACTOR SHALL OBTAIN AND PAY FOR ALL INSPECTIONS, CERTIFICATIONS, EQUIPMENT, ETC., THAT MAY BE REQUIRED.
13. THE ENGINEER AND/OR OWNER DISCLAIM ANY ROLE IN THE CONSTRUCTION MEANS AND METHODS ASSOCIATED WITH THE PROJECT AS SET FORTH IN THESE PLANS.
14. ALL LOT STRIPING AND DIRECTIONAL ARROWS TO BE REFLECTIVE MARKINGS AND SHALL CONFORM TO NCDOT. ALL PARKING STALL MARKINGS AND LANE ARROWS WITHIN THE PARKING AREAS SHALL BE WHITE.
15. ALL PARKING LOT DIMENSIONS ARE FROM FACE OF CURB.
16. LANDSCAPE PLANTINGS AT ENTRANCE/ EXITS WILL BE INSTALLED AND MAINTAINED SO AS NOT TO INTERFERE WITH SIGHT DISTANCE NEEDS OF DRIVERS IN THE PARKING AREA AND AT ENTRANCE/EXIT LOCATIONS PER LOCAL STANDARDS.
17. SEEDING TO BE INSTALLED TO LOCAL REQUIREMENTS & STANDARD PRACTICES.
18. ALL DIMENSIONS AND RADII ARE TO OUTSIDE FACE OF BUILDING OR TO FACE OF CURB UNLESS OTHERWISE NOTED.

NC ACCESSIBILITY NOTES:

GENERAL NOTES:

1. SPECIAL ATTENTION SHALL BE GIVEN TO COMPLIANCE WITH AMERICANS WITH DISABILITIES ACT (2010 ADA STANDARDS), THE NORTH CAROLINA BUILDING CODE/ANSI A117.1, AND APPLICABLE LOCAL LAWS & REGULATIONS.
2. IT IS ESSENTIAL THAT CONTRACTORS ARE AWARE OF THE SITE ACCESSIBILITY REQUIREMENTS. PARAMOUNTE ENGINEERING HAS DEVELOPED THESE NOTES AND DETAILS TO ASSURE THAT CONTRACTORS ARE AWARE OF THE REQUIREMENTS AT THE POINT IN TIME WHEN THEYARE BIDDING THE PROJECT. IN ADDITION, PARAMOUNTE ENGINEERING HAS MADE A POINT IN THESE NOTES AND DETAILS, AS WELL AS IN OUR DRAWINGS, TO PROVIDE SLOPES / GRADES AND DIMENSIONS THAT COMPLY WITH THE AMERICANS WITH DISABILITIES ACT (2010 ADA STANDARDS), THE NORTH CAROLINA BUILDING CODE/ANSI A117.1 AND APPLICABLE LOCAL LAWS & REGULATIONS. IF THESE SLOPES / GRADES AND DIMENSIONS ARE NOT ACHIEVABLE, THE CONTRACTOR IS REQUIRED TO CONTACT THE OWNER IMMEDIATELY AND BEFORE MOVING FORWARD WITH THE WORK.
3. THE CONTRACTOR SHALL NOTIFY PARAMOUNTE ENGINEERING IMMEDIATELY OF ANY CONFLICT BETWEEN THESE NOTES AND DETAILS AND OTHER PROJECT DRAWINGS, WHETHER BY PARAMOUNTE ENGINEERING OR OTHERS. THE CONTRACTOR SHALL NOT PROCEED WITH THE WORK FOR WHICH THE ALLEGED CONFLICT HAS BEEN DISCOVERED UNTIL SUCH ALLEGED CONFLICT HAS BEEN RESOLVED. NO CLAIM SHALL BE MADE BY THE CONTRACTOR FOR DELAY OR DAMAGES AS A RESULT OF RESOLUTION OF ANY SUCH CONFLICT(S).
4. THESE ACCESSIBILITY NOTES AND DETAILS ARE INTENDED TO DEPICT SLOPE AND DIMENSIONAL REQUIREMENTS ONLY. REFER TO SIDEWALK, CURBING, AND PAVEMENT DETAILS FOR ADDITIONAL INFORMATION.

ACCESSIBLE ROUTE NOTES:

1. AT LEAST ONE ACCESSIBLE ROUTE SHALL BE PROVIDED WITHIN THE SITE FROM ACCESSIBLE PARKING SPACES AND ACCESSIBLE PASSENGER LOADING ZONES; PUBLIC STREETS OR SIDEWALKS; AND PUBLIC TRANSPORTATION STOPS TO THE ACCESSIBLE BUILDING OR FACILITY ENTRANCE THEY SERVE.
2. AT LEAST ONE ACCESSIBLE ROUTE SHALL CONNECT ACCESSIBLE BUILDINGS, ACCESSIBLE FACILITIES, ACCESSIBLE ELEMENTS, AND ACCESSIBLE SPACES THAT ARE ON THE SAME SITE.
3. WALKING SURFACES THAT ARE PART OF AN ACCESSIBLE ROUTE SHALL HAVE A MAXIMUM RUNNING SLOPE OF 5.0% AND A MAXIMUM CROSS SLOPE OF 2.0%.
4. ANY WALKING SURFACE THAT IS PART OF AN ACCESSIBLE ROUTE WITH A RUNNING SLOPE GREATER THAN 5.0% IS A RAMP AND SHALL COMPLY WITH THE GUIDELINES FOR RAMPS OR CURB RAMPS.
5. TRANSITIONS BETWEEN RAMPS, WALKS, LANDINGS, GUTTERS OR STREETS SHALL BE FLUSHAND FREE OF ABRUPT VERTICAL CHANGES (1/4 INCH MAXIMUM VERTICAL CHANGE IN LEVEL PERMITTED).
6. FLOOR SURFACES SHALL BE STABLE, FIRM AND SLIP RESISTANT.
7. THE MINIMUM CLEAR WIDTH OF EXTERIOR ACCESSIBLE ROUTES SHALL BE FORTY-EIGHT (48) INCHES MINIMUM MEASURED BETWEEN HANDRAILS WHERE HANDRAILS ARE PROVIDED (NC BUILDING CODE 1104.1 & 1104.2).
8. WHERE AN ACCESSIBLE ROUTE MAKES A 180 DEGREE TURN AROUND AN OBJECT THAT IS LESS THAN FORTY-EIGHT (48) INCHES IN WIDTH, CLEAR WIDTH SHALL BE FORTY-TWO (42) INCHES MINIMUM APPROACHING THE TURN, FORTY-EIGHT (48) INCHES MINIMUM DURING THE TURN, AND FORTY-TWO (42) INCHES MINIMUM LEAVING THE TURN. THE CLEAR WIDTH APPROACHING AND LEAVING THE TURN MAY BE THIRTY-SIX (36) INCHES MINIMUM WHEN THE CLEAR WIDTH AT THE TURN IS SIXTY (60) INCHES MINIMUM. .* SEE NOTE 7 ABOVE FOR NC CLEAR WIDTH OF EXTERIOR ACCESSIBLE ROUTES*
9. AN ACCESSIBLE ROUTE WITH A CLEAR WIDTH LESS THAN SIXTY (60) INCHES SHALLPROVIDE PASSING SPACES AT INTERVALS OF TWO HUNDRED (200) FEET MAXIMUM. PASSING SPACES SHALL BE EITHER A SIXTY (60) INCH MINIMUM BY SIXTY (60) INCH MINIMUM SPACE; OR AN INTERSECTION OF TWO (2) WALKING SURFACES THAT PROVIDE A COMPLIANT T-SHAPED TURNING SPACE, PROVIDED THE BASE AND ARMS OF THE T-SHAPED SPACE EXTEND FORTY-EIGHT (48) INCHES MINIMUM BEYOND THE INTERSECTION.
10. DOORS, DOORWAYS AND GATES THAT ARE PART OF AN ACCESSIBLE ROUTE SHALL COMPLY WITH THE AMERICANS WITH DISABILITIES ACT (2010 ADA STANDARDS), THE NORTH CAROLINA BUILDING CODE/ ANSI A117.1, AND APPLICABLE LOCAL LAWS & REGULATIONS.
11. DIRECTIONAL SIGNAGE INDICATING THE ROUTE TO THE NEAREST ACCESSIBLE BUILDING ENTRANCE SHALL BE PROVIDED AT INACCESSIBLE BUILDING ENTRANCES.
12. WHERE POSSIBLE, DRAINAGE INLETS SHALL NOT BE LOCATED ON AN ACCESSIBLE ROUTE. IN THE EVENT THAT A DRAINAGE INLET MUST BE LOCATED ON AN ACCESSIBLE ROUTE, THE GRATE SHALL COMPLY WITH THE AMERICANS WITH DISABILITIES ACT (2010 ADA STANDARDS), A117.1, THE NC BUILDING CODE, AND APPLICABLE LOCAL LAWS & REGULATIONS

RAMP NOTES:

1. ANY PART OF AN ACCESSIBLE ROUTE WITH A RUNNING SLOPE GREATER THAN 5% SHALL BE CONSIDERED A RAMP.
2. THE MAXIMUM RUNNING SLOPE FOR A RAMP SHALL BE 8.33% AND THE MAXIMUM CROSS SLOPE SHALL BE 2.0%.
3. THE CLEAR WIDTH OF AN EXTERIOR RAMP RUN SHALL BE FORTY EIGHT INCHES (NC BUILDING CODE 1104.1). WHERE HANDRAILS ARE PROVIDED ON THE RAMP RUN, THE CLEAR WIDTH SHALL BE MEASURED BETWEEN THE HANDRAILS.
4. THE RISE FOR ANY RAMP RUN SHALL BE THIRTY (30) INCHES MAXIMUM.
5. LANDINGS SHALL BE PROVIDED AT THE TOP AND BOTTOM OF RAMPS. LANDINGS SHALL HAVE A SLOPE NOT STEEPER THAN 2.0% IN ANY DIRECTION. THE LANDING CLEAR WIDTH SHALL BE AT LEAST AS WIDE AS THE WIDEST RAMP RUN LEADING TO THE LANDING. THE LANDING CLEAR LENGTH SHALL BE SIXTY (60) INCHES LONG MINIMUM. RAMPS THAT CHANGE DIRECTION BETWEEN RUNS AT LANDINGS SHALL HAVE A CLEAR LANDING OF SIXTY (60) INCHES BY SIXTY (60) INCHES MINIMUM.
6. RAMP RUNS WITH A RISE GREATER THAN SIX (6) INCHES SHALL HAVE HANDRAILS ON BOTH SIDES COMPLYING WITH THE AMERICANS WITH DISABILITIES ACT (2010 ADA STANDARDS), THE NC BUILDING CODE/ANSI A117.1, AND APPLICABLE LOCAL LAWS & REGULATIONS.
7. FLOOR SURFACES OF RAMPS AND LANDINGS SHALL BE STABLE, FIRM AND SLIP RESISTANT.
8. EDGE PROTECTION COMPLYING WITH AMERICANS WITH DISABILITIES ACT (2010 ADA STANDARDS), THE NC BUILDING CODE/ANSI A117.1, AND APPLICABLE LOCAL LAWS & REGULATIONS SHALL BE PROVIDED ON EACH SIDE OF RAMP RUNS AND ON EACH SIDE OF RAMP LANDINGS.
9. WHERE DOORWAYS ARE LOCATED ADJACENT TO A RAMP LANDING, MANEUVERING CLEARANCES REQUIRED BY THE AMERICANS WITH DISABILITIES ACT (2010 ADA STANDARDS), THE NC BUILDING CODE/ANSI A117.1 SHALL BE PERMITTED TO OVERLAP THE REQUIRED LANDING AREA. WHERE DOORS THAT ARE SUBJECT TO LOCKING ARE ADJACENT TO A RAMP LANDING, LANDINGS SHALL BE SIZED TO PROVIDE A COMPLIANT TURNING SPACE.

CURB RAMP NOTES:

1. THE MAXIMUM RUNNING SLOPE OF A CURB RAMP SHALL BE 8.33% AND THE MAXIMUM CROSS SLOPE SHALL BE 2.0%.
2. COUNTER SLOPES OF ADJOINING GUTTERS AND ROAD SURFACES IMMEDIATELY ADJACENT TO THE CURB RAMP SHALL NOT BE STEEPER THAN 5%. THE ADJACENT SURFACES AT TRANSITIONS AT CURB RAMPS TO WALKS, GUTTERS AND STREETS SHALL BE AT THE SAME LEVEL.
3. THE CLEAR WIDTH OF A CURB RAMP SHALL BE 36 INCHES (36) MINIMUM, EXCLUSIVE OF FLARED SIDES, IF PROVIDED. *NOTE NC BUILDING CODE REQUIRES EXTERIOR ACCESSIBLE ROUTES TO BE 48 INCHES MINIMUM WIDE (1104.1 & 1104.2).*
4. LANDINGS SHALL BE PROVIDED AT THE TOP OF CURB RAMPS. THE CLEAR LENGTH OF THE LANDING SHALL BE THIRTY-SIX (36) INCHES MINIMUM. THE CLEAR WIDTH OF THE LANDING SHALL BE AT LEAST AS WIDE AS THE CURB RAMP, EXCLUDING FLARED SIDES, LEADING TO THE LANDING. LANDINGS SHALL HAVE A SLOPE NOT STEEPER THAN 2% IN ANY DIRECTION.
5. IF A CURB RAMP IS LOCATED WHERE PEDESTRIANS MUST WALK ACROSS THE RAMP, OR WHERE IT IS NOT PROTECTED BY HANDRAILS OR GUARDRAILS, IT SHALL HAVE FLARED SIDES.
6. WHERE PROVIDED, CURB RAMP FLARES SHALL NOT EXCEED 10%.
7. CURB RAMPS AND THE FLARED SIDES OF CURB RAMPS SHALL BE LOCATED SO THAT THEY DO NOT PROJECT INTO VEHICULAR TRAFFIC LANES, PARKING SPACES OR PARKING ACCESS AISLES. CURBS AT MARKED CROSSINGS SHALL BE WHOLLY CONTAINED WITHIN THE MARKINGS, EXCLUDING ANY FLARED SIDES.
8. CURB RAMPS SHALL BE LOCATED OR PROTECTED TO PREVENT THEIR OBSTRUCTION BY PARKED VEHICLES.
9. IT IS RECOMMENDED TO PROVIDE CURB RAMPS WITH A TWENTY-FOUR (24) INCH DEEP DETECTABLE WARNING COMPLYING WITH 406.12 A117.1, EXTENDING THE FULL WIDTH OF THE RAMP. REFERTO DETECTABLE WARNING DETAILS AND NOTES FOR PLACEMENT, ORIENTATION AND NOTES. THE NC BUILDING CODE DOES NOT CURRENTLY REQUIRE DETECTABLE WARNINGS AT CURB RAMPS, NOR DO THE 2010 ADA STANDARDS - HOWEVER US DOT ADA REGULATIONS DO REQUIRE THESE.
10. FLOOR SURFACES OF CURB RAMPS SHALL BE DEEP GROOVED, ½ INCH WIDE BY ¼ INCH DEEP, ONE (1) INCH CENTERS TRANSVERSE TO THE RAMP.
11. WHERE PROVIDED, STOP LINES SHALL BE LOCATED IN ADVANCE OF CURB RAMP.
12. WHERE PROVIDED, PEDESTRIAN ACTIVATED SIGNALS SHALL BE LOCATED ADJACENT TO THE SIDEWALK AND NOT ON THE SIDEWALK.
13. WHERE PROVIDED, DRAINAGE INLETS SHALL BE LOCATED UPSTREAM OF CURB RAMPS AND NOT IN THE RAMP AREA.
14. CURB RAMP TYPE AND LOCATION ARE PER PLAN.

PARKING SPACE NOTES:

1. ACCESSIBLE PARKING SPACES SHALL BE LOCATED ON THE SHORTEST ACCESSIBLE ROUTES OF TRAVEL FROM ADJACENT PARKING TO AN ACCESSIBLE BUILDING ENTRANCE.
2. ACCESSIBLE PARKING SPACES SHALL BE AT LEAST NINETY-SIX (96) INCHES WIDE. ACCESS AISLES SHALL BE 60 INCHES WIDE. ONE OF SIX ACCESSIBLE SPACES SHOULD PROVIDE A VAN ACCESSIBLE AISLE. THE AISLE SHOULD BE 96 INCHES WIDE (OR ACCESSIBLE SPACE IS 11 FEET AND ACCESS AISLE IS FIVE FEET). WHERE PARKING SPACES AND ACCESS AISLES ARE MARKED WITH LINES, THE WIDTH MEASUREMENTS SHALL BE MADE FROM CENTERLINE OF THE MARKINGS. WHERE PARKING SPACES OR ACCESS AISLES ARE NOT ADJACENT TO ANOTHER PARKING SPACE OR ACCESS AISLES, MEASUREMENTS SHALL BE PERMITTED TO INCLUDE THE FULL WIDTH OF THE LINE DEFINING THE PARKING SPACE OR ACCESS AISLE.
3. PARKING ACCESS AISLES SHALL BE PART OF AN ACCESSIBLE ROUTE TO THE BUILDING OR FACILITY ENTRANCE AND SHALL COMPLY WITH PROVISIONS FORACCESSIBLE ROUTES. MARKED CROSSINGS SHALL BE PROVIDED WHERE THE ACCESSIBLE ROUTE MUST CROSS VEHICULAR TRAFFIC LANES. WHERE POSSIBLE, IT IS PREFERABLE THAT THE ACCESSIBLE ROUTE NOT PASS BEHIND PARKED VEHICLES.
4. TWO (2) ACCESSIBLE PARKING SPACES MAY SHARE A COMMON ACCESS AISLE.
5. ACCESS AISLES SHALL EXTEND THE FULL LENGTH OF THE PARKING SPACE THEY SERVE.
6. ACCESS AISLES SHALL BE MARKED SO AS TO DISCOURAGE PARKING IN THEM.
7. ACCESS AISLES SHALL NOT OVERLAP THE VEHICULAR WAY. ACCESS AISLES SHALL BE PERMITTED TO BE PLACED ON EITHER SIDE OF THE PARKING SPACE EXCEPTFOR ANGLED VAN PARKING SPACES WHICH SHALL HAVE ACCESS AISLES LOCATED ON THE PASSENGER SIDE OF THE PARKING SPACES.
8. FLOOR SURFACES OF PARKING SPACES AND ACCESS AISLES SERVING THEM SHALL BE STABLE, FIRM AND SLIP RESISTANT. ACCESS AISLES SHALL BE AT THE SAME LEVEL AS THE PARKING SPACES THEY SERVE. CHANGES IN LEVEL ARE NOT PERMITTED.
9. PARKING SPACES AND ACCESS AISLES SHALL BE LEVEL WITH SURFACE SLOPES NOT EXCEEDING 2.0% IN ALL DIRECTIONS.
10. PARKED VEHICLE OVERHANGS SHALL NOT REDUCE THE REQUIRED CLEAR WIDTH OF AN ACCESSIBLE ROUTE.
11. PARKING SPACES FOR VANS AND ACCESS AISLES AND VEHICULAR ROUTES SERVING THEM SHALL PROVIDE A VERTICAL CLEARANCE OF NINETY-EIGHT (98) INCHES MINIMUM. SIGNS SHALL BE PROVIDED AT ENTRANCES TO PARKING FACILITIES INFORMING DRIVERS OF CLEARANCES AND THE LOCATION OF VAN ACCESSIBLE PARKING SPACES.
12. EACH ACCESSIBLE PARKING SPACE SHALL BE PROVIDED WITH SIGNAGE DISPLAYING THE INTERNATIONAL SYMBOL OF ACCESSIBILITY. SIGNS SHALL BE INSTALLED AT A MINIMUM CLEAR HEIGHT OF SIXTY (60) INCHES ABOVE GRADE AND SHALL NOT INTERFERE WITH AN ACCESSIBLE ROUTE FROM AN ACCESS AISLE. SIGNS LOCATED WHERE THEY MAY BE HIT BY VEHICLES BEING PARKED SHALL BE INSTALLED WITH BOLLARD PROTECTION.
13. SIGNAGE AT ACCESSIBLE PARKING SPACES REQUIRED BY THE NC BUILDING CODE SECTION 1106.1SHALL COMPLY WITH THE REQUIREMENTS OF NORTH CAROLINA GENERAL STATUTE 20-37.6 AND 136-30 AND THE NCDOT UNIFORM MANUAL ON TRAFFIC CONTROL DEVICES. A SEPARATE SIGN IS REQUIRED FOR EACH SPACE. SIGNS TO INDICATE THE MAXIMUM PENALTY MUST BE PROVIDED AT EACH ACCESSIBLE SPACE.
14. ACCESSIBLE PARKING SPACE, ACCESS AISLE STRIPING, AND INTERNATIONAL SYMBOL OF ACCESSIBILITY SHALL BE PAINTED BLUE (OR ANOTHER COLOR THAT CAN BE DISTINGUISHED FROM PAVEMENT).

PASSENGER LOADING ZONE NOTES:

1. PASSENGER LOADING ZONES SHALL PROVIDE VEHICULAR PULL-UP SPACE NINETY-SIX (96) INCHES WIDE MINIMUM AND TWENTY (20) FEET LONG MINIMUM.
2. PASSENGER LOADING ZONES SHALL PROVIDE A CLEARLY MARKED ACCESS AISLE THAT IS SIXTY (60) INCHES WIDE MINIMUM AND EXTENDS THE FULL LENGTH OF THE VEHICLE PULL-UP SPACE THEY SERVE.
3. ACCESS AISLE SHALL ADJOIN AN ACCESSIBLE ROUTE AND NOT OVERLAP THE VEHICULAR WAY.
4. VEHICLE PULL-UP SPACES AND ACCESS AISLES SERVING THEM SHALL BE LEVEL WITH SURFACE SLOPES NOT EXCEEDING 2.0% IN ALL DIRECTIONS. ACCESS AISLES SHALL BE AT THE SAME LEVEL AS THE VEHICLE PULL-UP SPACE THEY SERVE. CHANGES IN LEVEL ARE NOT PERMITTED.
5. FLOOR SURFACES OF VEHICLE PULL-UP SPACES AND ACCESS AISLES SERVING THEM SHALL BE STABLE, FIRM AND SLIP RESISTANT.
6. VEHICLE PULL-UP SPACES, ACCESS AISLES SERVING THEM AND A VEHICULAR ROUTE FROM AN ENTRANCE TO THE PASSENGER LOADING ZONE, AND FROM THE PASSENGER LOADING ZONE TO A VEHICULAR EXIT SERVING THEM, SHALL PROVIDE A VERTICAL CLEARANCE OF ONE HUNDRED FOURTEEN (114) INCHES MINIMUM.

ACCESSIBLE ENTRANCE NOTES:

1. ACCESSIBLE ENTRANCES SHALL BE PROVIDED AS REQUIRED BY THE AMERICANS WITH DISABILITIES ACT (2010 ADA STANDARDS) AND THE NORTH CAROLINA BUILDING CODE, AND APPLICABLE LOCAL LAWS & REGULATIONS.
2. ENTRANCE DOORS, DOORWAYS AND GATES SHALL COMPLY WITH THE AMERICANS WITH DISABILITIES ACT (2010 ADA STANDARDS) THE NC BUILDING CODE/ANSI A117.1 AND SHALL BE ON AN ACCESSIBLE ROUTE.

GENERAL UTILITY NOTES

1. ALL STORM SEWERS SHALL BE CONSTRUCTED IN ACCORDANCE WITH CITY OF WILMINGTON REQUIREMENTS AS SPECIFIED ON THE DRAWINGS AND IN THE PROJECT SPECIFICATIONS.
2. BEDDING FOR ALL STORM SEWER PIPE SHALL BE AS SPECIFIED ON THE DRAWINGS.
3. ALL STORM SEWER PIPES SHOWN AS RCP ON THE PLANS SHALL BE REINFORCED CONCRETE PIPE CONFORMING TO ASTM C-76, UNLESS INDICATED OTHERWISE ON PLANS.

STORM WATER NOTES

1. TOTAL SITE AREA = 556,155 SF (12.77 AC)
2. DISTURBED AREA = 87,120 SF (2.0 AC)
3. IMPERVIOUS AREA DRAINING TO STORMWATER SYSTEM = 154,900 SF (3.56 AC) (EXISTING & PROPOSED)

WETLAND NOTES:

1) WETLANDS WERE DELINEATED BY LAND MANAGEMENT GROUP AS SHOWN ON THE PLANS.

ROOF DRAIN NOTE:

1) PROPOSED BUILDING SHALL DIVERT ROOF DRAINAGE TO STORMWATER COLLECTION SYSTEM.

EXISTING UTILITY NOTES:

1. IT IS THE RESPONSIBILITY OF THE GENERAL CONTRACTOR TO VERIFY THE ACTUAL LOCATION AND AVAILABILITY OF ALL EXISTING AND PROPOSED UTILITIES IN THE FIELD PRIOR TO GROUND BREAKING.
2. EXISTING UTILITIES AND STRUCTURES SHOWN, BOTH UNDERGROUND AND ABOVE GROUND, ARE BASED ON A FIELD SURVEY AND THE BEST AVAILABLE RECORD DRAWINGS. THE CONTRACTOR SHALL FIELD VERIFY FIELD CONDITIONS PRIOR TO BEGINNING RELATED CONSTRUCTION. ANY DISCREPANCIES SHALL BE REPORTED TO THE OWNER'S REPRESENTATIVE IMMEDIATELY.

LEGEND

Symbol	Description
WET	= EXISTING WETLANDS
	= EXISTING PROPERTY LINE
24	= EXISTING CONTOURS
IPF	= IRON PIPE FOUND
IRF	= IRON ROD FOUND
CMF	= CONCRETE MONUMENT
	= TELEPHONE PEDESTAL
UT UT	= UNDERGROUND TELEPHONE
TR	= TRANSFORMER PEDESTAL (PAD)
	= PROPOSED DROP INLET
	= PROPOSED CURB INLET
	= PROPOSED STORM SEWER
D	= PROPOSED STORM DRAIN MANHOLE
CI-8	= PROPOSED CURB INLET
DI-8	= PROPOSED DROP INLET
MH-8	= PROPOSED STORM DRAIN MANHOLE
PG=49.90	= PROPOSED SPOT ELEVATIONS
35	= PROPOSED CONTOUR
	= PROPOSED DRAINAGE AREAS
	= PROPOSED SILT FENCE
LOD	= PROPOSED LIMITS OF DISTURBANCE
	= PROPOSED TREE PROTECTION FENCING
	= PROPOSED INLET PROTECTION
	= PROPOSED TRAFFIC ARROW
	= PROPOSED WOOD SHADOWBOX FENCE
	= PROPOSED SIGN
SS SS	= PROPOSED SANITARY SEWER SERVICE
C.O.	= PROPOSED SANITARY SEWER CLEANOUT
	= EX. ASPHALT AREA TO BE MILLED 1-INCH AND OVERLAYED
	= PROPOSED ASPHALT PAVEMENT SECTION
	= PROPOSED CONCRETE CURB & GUTTER

NPDES WATER QUALITY STABILIZATION TIME FRAMES		
SITE AREA DESCRIPTION	STABILIZATION	TIMEFRAME EXCEPTIONS
PERIMETER DIKES, SWALES, DITCHES AND SLOPES	7 DAYS	NONE
HIGH QUALITY WATER (HQW) ZONES	7 DAYS	NONE
SLOPES STEEPER THAN 3:1	7 DAYS	IF SLOPES ARE 10' OR LESS IN LENGTH AND ARE NOT STEEPER THAN 2:1, 14 DAYS ARE ALLOWED
SLOPES 3:1 OR FLATTER	14 DAYS	7 DAYS FOR SLOPES GREATER THAN 50' IN LENGTH
ALL OTHER AREAS WITH SLOPES FLATTER THAN 4:1	14 DAYS	NONE, EXCEPT FOR PERIMETERS AND HQW ZONES

Approved Construction Plan

	Name	Date
Planning		
Traffic		
Fire		

CITY OF WILMINGTON NORTH CAROLINA
Public Services • Engineering Division
APPROVED STORMWATER MANAGEMENT PLAN
Date:__________ Permit #______________
Signed: ______________________

For each open utility cut of City streets, a $325 permit shall be required from the City prior to occupancy and/or project acceptance.

NCDENR PWSS WATER PERMIT #: ______________
WATER CAPACITY: ______________GPD
DWQ SEWER PERMIT #: ______________
SEWER CAPACITY: ______________GPD
SEWER SHED # AND PLANT: ______________
SEWER TO FLOW THROUGH NEI: YES or NO (CIRCLE ONE)

FINAL DESIGN - NOT RELEASED FOR CONSTRUCTION

PARAMOUNTE ENGINEERING, INC.
WILMINGTON, NC FAYETTEVILLE, NC
5911 Oleander Drive, Suite 201
Wilmington, North Carolina 28403
(910) 791-6707 (O) (910) 791-6760 (F)
NC License #: C-2846

Lower Cape Fear Hospice & LifeCareCenter

LOWER CAPE FEAR HOSPICE WILMINGTON CARE CENTER - SIX BED ADDITION 1406 PHYSICIANS DR.

LS3P ASSOCIATES LTD.
2528 INDEPENDENCE BLVD. SUITE 200
WILMINGTON, NORTH CAROLINA 28412
TEL. 910.790.9901 FAX 910.790.3111
WWW.LS3P.COM

NORTH CAROLINA PROFESSIONAL ENGINEER SEAL 031591 ROBERT P. BALLAND 5/1/13

MEMBERS OF THE AMERICAN INSTITUTE OF ARCHITECTS

COPYRIGHT 2012 ALL RIGHTS RESERVED PRINTED OR ELECTRONIC DRAWINGS AND DOCUMENTATION MAY NOT BE REPRODUCED IN ANY FORM WITHOUT WRITTEN PERMISSION FROM LS3P ASSOCIATES LTD.

REVISIONS:

No.	Description	Date
1.	COW Traffic Comments	3/25/13

PROJECT: 12217.PE
DATE: MAY 1, 2013
DRAWN BY: RPB
CHECKED BY: RPB

GENERAL NOTES

C-1.0

SOLUTIONS THROUGH LISTENING
SERVICE BY DESIGN

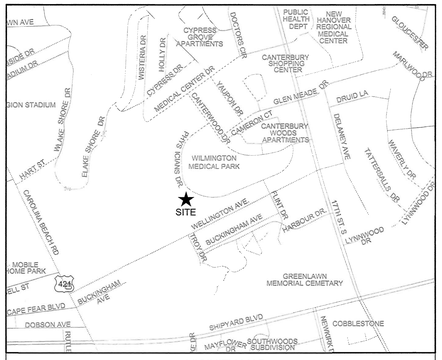

VICINITY MAP
1"=500'

DEMOLITION QUANTITIES

TOTAL AREA OF ASPHALT TO BE REMOVED:	2,104± SF
TOTAL AREA OF CONCRETE TO BE REMOVED:	4,250± SF
TOTAL AREA OF BRICK TO BE REMOVED:	1,077± SF
TOTAL LENGTH OF CURBING TO BE REMOVED:	259± LF
TOTAL LENGTH OF FENCING TO BE REMOVED:	89± LF
TOTAL UTILITIES TO BE REMOVED:	1 TRANSFORMER 88± LF OF UNDERGROUND ELECTRIC LINE 200± LF OF OVERHEAD ELECTRIC LINE & 4 POWER POLES 90± LF OF SANITARY SEWER SERVICE LINE 1 GREASE INTERCEPTOR 116± LF OF GAS LINE & 1 GAS METER

UTILITY CONTACTS

GAS
OPERATING AUTHORITY: PIEDMONT NATURAL GAS
ADDRESS: 1321 S. 10TH STREET
WILMINGTON, NC 28405
CONTACT: CARL PAQUET
PHONE #: (910) 350-2242
EMAIL: carl.paquet@piedmontng.com

WATER, SANITARY SEWER
OPERATING AUTHORITY: CAPE FEAR PUBLIC UTILITY AUTHORITY
ADDRESS: 235 GOVERNMENT CENTER DRIVE
WILMINGTON, NC 28403
CONTACT: FRANK STYERS, P.E.
PHONE #: (910) 332-6550
EMAIL: Frank.Styers@cfpua.org

TELEPHONE
OPERATING AUTHORITY: BELLSOUTH
ADDRESS: 102 N. 4TH STREET
WILMINGTON, NC 28401
CONTACT: STEVE DAYVAULT
PHONE #: (910) 341-0741

ELECTRIC
OPERATING AUTHORITY: PROGRESS ENERGY
ADDRESS: 404 RALEIGH STREET
WILMINGTON, NC 28412
CONTACT: KEVIN LEATHERWOOD
PHONE #: (910) 602-4304
EMAIL: kevin.leatherwood@pgnmail.com

SYMBOLS LEGEND	
REFER TO SURVEY FOR EXISTING CONDITION SYMBOLS LEGEND	
	EXISTING ASPHALT TO BE REMOVED
	EXISTING FENCE TO BE REMOVED
	EXISTING CONCRETE TO BE REMOVED
	EXISTING BRICK TO BE REMOVED
	EXISTING TREE TO BE REMOVED
	EXISTING UTILITY LINE TO BE REMOVED

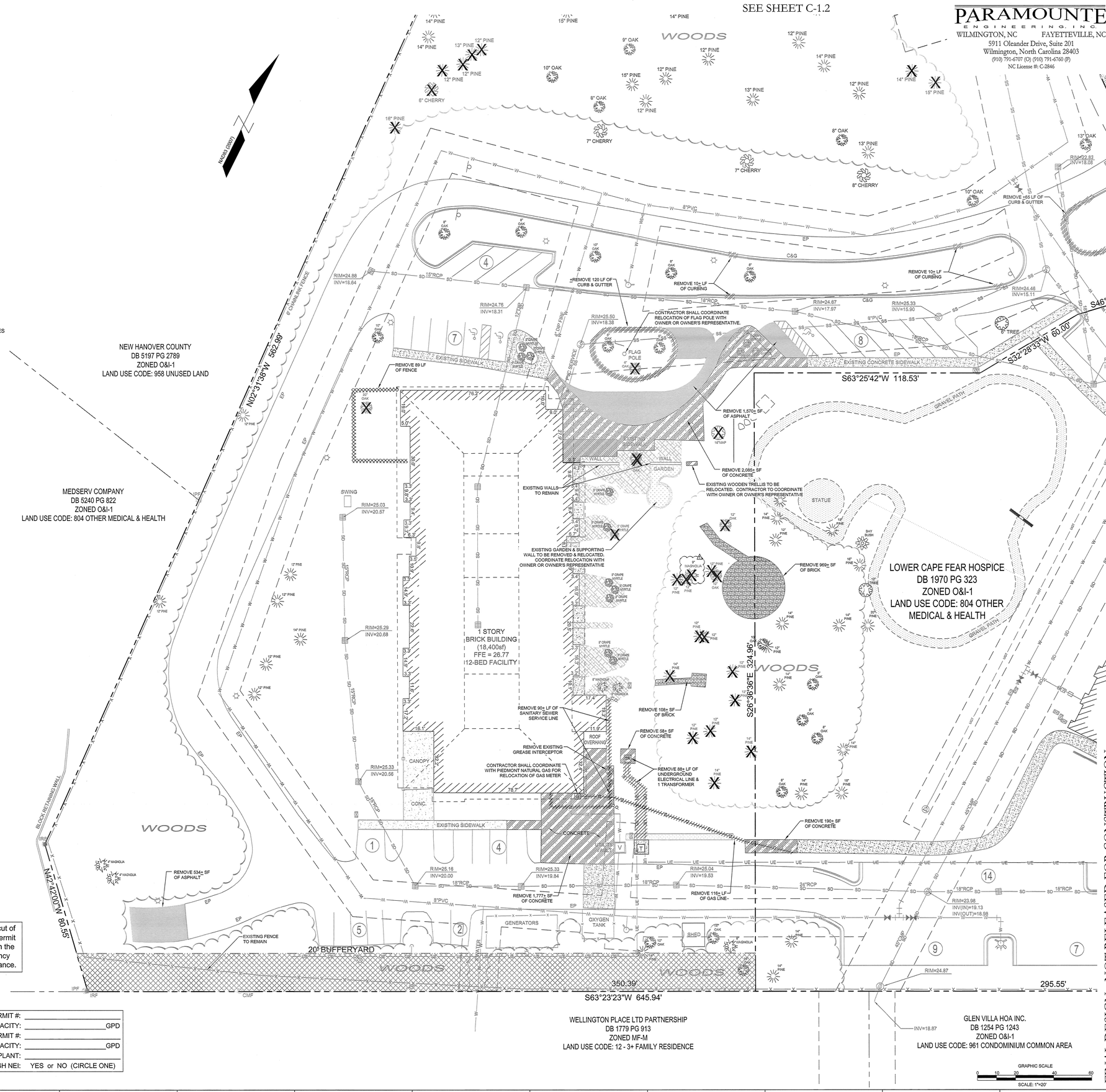

Approved Construction Plan

	Name	Date
Planning		
Traffic		
Fire		

For each open utility cut of City streets, a $325 permit shall be required from the City prior to occupancy and/or project acceptance.

CITY OF WILMINGTON NORTH CAROLINA
Public Services • Engineering Division
APPROVED STORMWATER MANAGEMENT PLAN
Date: _____ Permit # _____
Signed: _____

NCDENR PWSS WATER PERMIT #: _____
WATER CAPACITY: _____ GPD
DWQ SEWER PERMIT #: _____
SEWER CAPACITY: _____ GPD
SEWER SHED # AND PLANT: _____
SEWER TO FLOW THROUGH NEI: YES or NO (CIRCLE ONE)

PARAMOUNTE ENGINEERING, INC
WILMINGTON, NC FAYETTEVILLE, NC
5911 Oleander Drive, Suite 201
Wilmington, North Carolina 28403
(910) 791-6707 (O) (910) 791-6760 (F)
NC License #: C-2846

Lower Cape Fear Hospice & LifeCareCenter

LOWER CAPE FEAR HOSPICE WILMINGTON CARE CENTER - SIX BED ADDITION 1406 PHYSICIANS DR.

LS3P ASSOCIATES LTD.
2528 INDEPENDENCE BLVD. SUITE 200
WILMINGTON, NORTH CAROLINA 28412
TEL. 910.790.9901 FAX 910.790.3111
WWW.LS3P.COM

NORTH CAROLINA PROFESSIONAL SEAL 031391 ENGINEER ROBERT P. BALLARD 5/1/13

MEMBERS OF THE AMERICAN INSTITUTE OF ARCHITECTS

COPYRIGHT 2012 ALL RIGHTS RESERVED
PRINTED OR ELECTRONIC DRAWINGS AND DOCUMENTATION MAY NOT BE REPRODUCED IN ANY FORM WITHOUT WRITTEN PERMISSION FROM LS3P ASSOCIATES LTD.

REVISIONS:

No.	Description	Date
1.	COW Planning Comments	3/5/13
2.	COW Planning Comments	4/29/13

PROJECT: 12217.PE
DATE: MAY 1, 2013
DRAWN BY: RPB
CHECKED BY: RPB

FINAL DESIGN - NOT RELEASED FOR CONSTRUCTION

DEMOLITION PLAN

C-1.1

SOLUTIONS THROUGH LISTENING
SERVICE BY DESIGN

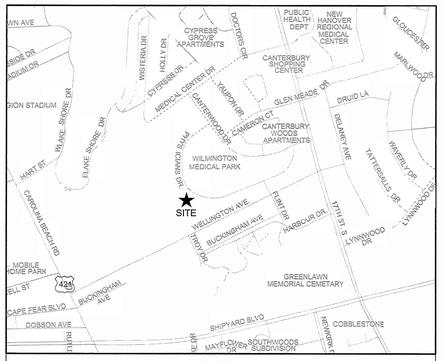

VICINITY MAP
1"=500'

TREES TO BE REMOVED

	REGULATED TREES	TREE SIZE	LOCATION	REASON FOR REMOVAL	NO. OF TREES
1.	CRAPE MYRTLE	5"	BUILDING	SITE IMPROVEMENTS	1
2.	CHERRY	6"	PARKING AREA	SITE IMPROVEMENTS	1
3.	OAK	6"	PARKING AREA	SITE IMPROVEMENTS	1
4.	OAK	8"	BUILDING	SITE IMPROVEMENTS	2
5.	OAK	9"	PARKING AREA	SITE IMPROVEMENTS	1
6.	OAK	10"	BUILDING	SITE IMPROVEMENTS	1
7.	OAK	12"	BUILDING	SITE IMPROVEMENTS	1
8.	OAK	20"	BUILDING	SITE IMPROVEMENTS	1
9.	PINE	12"	BUILDING	SITE IMPROVEMENTS	9
10.	PINE	12"	PARKING AREA	SITE IMPROVEMENTS	9
11.	PINE	12"	STORM DRAIN	SITE IMPROVEMENTS	1
12.	PINE	13"	PARKING AREA	SITE IMPROVEMENTS	12
13.	PINE	14"	BUILDING	SITE IMPROVEMENTS	3
14.	PINE	14"	PARKING AREA	SITE IMPROVEMENTS	3
15.	PINE	14"	STORM DRAIN	SITE IMPROVEMENTS	1
16.	PINE	15"	PARKING AREA	SITE IMPROVEMENTS	1
17.	PINE	16"	PARKING AREA	SITE IMPROVEMENTS	3
18.	PINE	17"	PARKING AREA	SITE IMPROVEMENTS	1
19.	MAPLE	16"	BUILDING	SITE IMPROVEMENTS	1
					53

	SIGNIFICANT TREES	TREE SIZE	LOCATION	REASON FOR REMOVAL	NO. OF TREES
1.	MAGNOLIA	9"	BUILDING	SITE IMPROVEMENTS	1

TREES TO BE PRESERVED

	REGULATED TREES	TREE SIZE	NO. OF TREES
1.	MAGNOLIA	4"	2
2.	MAGNOLIA	5"	1
3.	MAGNOLIA	6"	1
4.	MAGNOLIA	8"	1
5.	CRAPE MYRTLE	5"	13
6.	CHERRY	7"	2
7.	CHERRY	8"	1
8.	OAK	5"	1
9.	OAK	6"	1
10.	OAK	8"	13
11.	OAK	9"	4
12.	OAK	10"	8
13.	OAK	13"	1
14.	OAK	14"	1
15.	OAK	18"	1
16.	PINE	12"	32
17.	PINE	13"	17
18.	PINE	14"	19
19.	PINE	15"	8
20.	PINE	16"	2
21.	PINE	17"	1
22.	PINE	18"	1
23.	PINE	20"	1
24.	TREE - UNKNOWN	6"	1
25.	TREE - UNKNOWN	12"	1
26.	BAY BUSH		1
			135

SYMBOLS LEGEND

REFER TO SURVEY FOR EXISTING CONDITION SYMBOLS LEGEND	
	EXISTING ASPHALT TO BE REMOVED
	EXISTING FENCE TO BE REMOVED
	EXISTING CONCRETE TO BE REMOVED
	EXISTING BRICK TO BE REMOVED
	EXISTING TREE TO BE REMOVED
	EXISTING UTILITY LINE TO BE REMOVED

Approved Construction Plan

	Name	Date
Planning		
Traffic		
Fire		

For each open utility cut of City streets, a $325 permit shall be required from the City prior to occupancy and/or project acceptance.

CITY OF WILMINGTON NORTH CAROLINA
Public Services • Engineering Division
APPROVED STORMWATER MANAGEMENT PLAN
Date:_____ Permit #_____
Signed: _____

NCDENR PWSS WATER PERMIT #: _____
WATER CAPACITY: _____GPD
DWQ SEWER PERMIT #: _____
SEWER CAPACITY: _____GPD
SEWER SHED # AND PLANT: _____
SEWER TO FLOW THROUGH NEI: YES or NO (CIRCLE ONE)

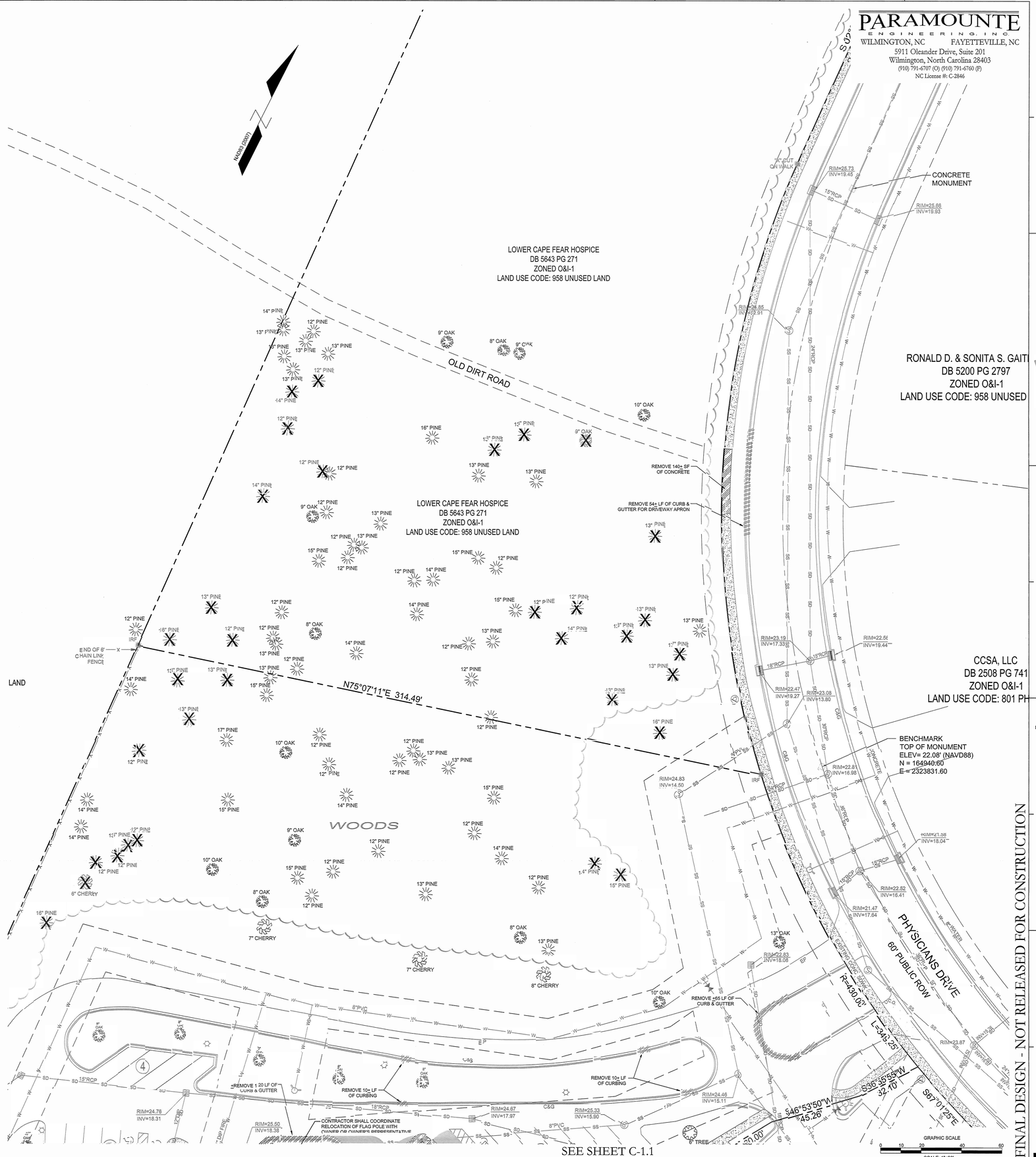

PARAMOUNTE ENGINEERING, INC
WILMINGTON, NC FAYETTEVILLE, NC
5911 Oleander Drive, Suite 201
Wilmington, North Carolina 28403
(910) 791-6707 (C) (910) 791-6760 (F)
NC License #: C-2846

Lower Cape Fear Hospice & LifeCareCenter

LOWER CAPE FEAR HOSPICE WILMINGTON CARE CENTER - SIX BED ADDITION
1406 PHYSICIANS DR.

LS3P

LS3P ASSOCIATES LTD.
2528 INDEPENDENCE BLVD. SUITE 200
WILMINGTON, NORTH CAROLINA 28412
TEL. 910.790.9901 FAX 910.790.3111
WWW.LS3P.COM

NORTH CAROLINA PROFESSIONAL SEAL 031901 ENGINEER ROBERT P. BALLARD

MEMBERS OF THE AMERICAN INSTITUTE OF ARCHITECTS

COPYRIGHT 2012 ALL RIGHTS RESERVED
PRINTED OR ELECTRONIC DRAWINGS AND DOCUMENTATION MAY NOT BE REPRODUCED IN ANY FORM WITHOUT WRITTEN PERMISSION FROM LS3P ASSOCIATES LTD.

REVISIONS:

No.	Description	Date
1.	COW Planning Comments	3/5/13
2.	COW Planning Comments	4/29/13

PROJECT: 12217.PE
DATE: MAY 1, 2013
DRAWN BY: RPB
CHECKED BY: RPB

DEMOLITION PLAN

C-1.2

FINAL DESIGN - NOT RELEASED FOR CONSTRUCTION

SOLUTIONS THROUGH LISTENING
SERVICE BY DESIGN

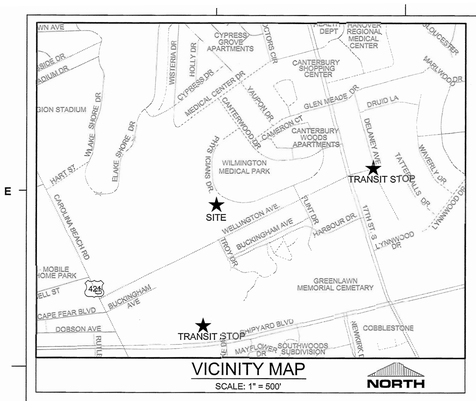

VICINITY MAP

SCALE: 1" = 500'

NOTES:

1. ALL DEVELOPMENT SHALL BE IN ACCORDANCE WITH THE CITY OF WILMINGTON LAND DEVELOPMENT CODE.
2. PROJECT SHALL COMPLY WITH ALL FEDERAL, STATE & NEW HANOVER COUNTY REGULATIONS.
3. PRIOR TO ANY CLEARING, GRADING OR CONSTRUCTION ACTIVITY, TREE PROTECTION FENCING WILL BE INSTALLED AROUND PROTECTED TREES OR GROVES OF TREES AND NO CONSTRUCTION WORKERS, TOOLS, MATERIALS, OR VEHICLES ARE PERMITTED WITHIN THE TREE PROTECTION FENCING.
4. ALL PAVEMENT MARKINGS IN PUBLIC RIGHTS-OF-WAY AND FOR DRIVEWAYS ARE TO BE THERMOPLASTIC AND MEET CITY AND/OR NCDOT STANDARDS.
5. TRAFFIC CONTROL DEVICES (INCLUDING SIGNS AND PAVEMENT MARKINGS) IN AREAS OPEN TO PUBLIC TRAFFIC ARE TO MEET MUTCD (MANUAL ON UNIFORM TRAFFIC CONTROL DEVICES) STANDARDS.
6. ANY BROKEN OR MISSING SIDEWALK PANELS WILL BE REPLACED.
7. ALL TRAFFIC CONTROL SIGNS AND MARKINGS OFF THE RIGHT OF WAY ARE TO BE MAINTAINED BY THE PROPERTY OWNER IN ACCORDANCE WITH MUTCD STANDARDS.
8. ALL PARKING STALL MARKINGS AND LANE ARROWS WITHIN THE PARKING AREAS SHALL BE WHITE.
9. A UTILITY CUT PERMIT IS REQUIRED FOR EACH OPEN CUT OF A CITY STREET; CONTACT 341-5888 FOR MORE DETAILS. IN CERTAIN CASES AN ENTIRE RESURFACING OF THE AREA BEING OPEN CUT MAY BY REQUIRED.
10. INSTALL REFLECTORS PER CITY AND NCDOT STANDARDS.
11. A LANDSCAPING PLAN INDICATING THE LOCATION OF REQUIRED STREET TREES SHALL BE SUBMITTED TO THE CITY OF WILMINGTON TRAFFIC ENGINEERING DIVISION AND PARKS AND RECREATION DEPARTMENT FOR REVIEW AND APPROVAL PRIOR TO THE RECORDING OF THE FINAL PLAT.
12. CONTACT TRAFFIC ENGINEERING AT 341-7888 FORTY-EIGHT HOURS PRIOR TO ANY EXCAVATION IN THE RIGHT OF WAY.
13. ALL HVAC EQUIPMENT WILL BE LOCATED ON THE ROOF.

SITE DATA TABULATION

CURRENT ZONING: O&I-1 (OFFICE AND INSTITUTIONAL DISTRICT 1)
LOWER CAPE FEAR HOSPICE & LIFECARE CENTER
1406 PHYSICIANS DRIVE
NEW HANOVER COUNTY PARCEL #: 3126-34-7646 (4.67ac), 3126-35-5297 (4.1ac), 3126-34-9694 (2.58ac), 3126-34-6862 (1.42ac)
TAX PARCEL IDENTIFICATION #: R06014-005-007-000, R06015-001-017-000, R06014-005-010-000 , R06014-005-011-000
RECORDED LOT #: 8R-3, M.B. 51, PG 351
CAMA LAND USE CLASSIFICATION: URBAN
MAXIMUM BUILDING HEIGHT: 45'

PROPOSED USE: MEDICAL FACILITY (12 EXISTING BEDS PLUS 6 PROPOSED BEDS, 18 TOTAL)

SETBACK STANDARDS

	PROVIDED	REQUIRED
MINIMUM FRONT SETBACK	256 FT.	20 FT.
MINIMUM SIDE SETBACK	49 FT. (WEST)	10 FT.
	10 FT. (EAST)	10 FT.
MINIMUM REAR SETBACK	84 FT.	25 FT.

SITE INFORMATION

MINIMUM LOT SIZE	556,155 SF (12.77 AC)	15,000 SF
PROPOSED IMPERVIOUS AREA		
TOTAL BUILDING (PROPOSED FOOTPRINT)	12,261 SF	
ROOF OVERHANG AREA (PROPOSED)	4,094 SF	
ON-SITE PARKING & DRIVEWAYS (PROPOSED)	32,089 SF	
ON-SITE SIDEWALKS (PROPOSED)	4,045 SF	
TOTAL PROPOSED IMP. AREA	52,489 SF	
EXISTING IMPERVIOUS AREA (LIFE CAR CENTER AND ADMINISTRATION BUILDING)		
BUILDING (EXISTING)	30,059 SF	
ON-SITE PARKING (EXISTING)	67,548 SF	
ON-SITE SIDEWALKS (EXISTING)	12,087 SF	
ON-SITE MISCELLANEOUS	1,140 SF	
TOTAL EXISTING IMP. AREA	110,834 SF	
ON-SITE EXIST. TO BE DEMOLISHED	7,431 SF	
	103,403 SF	
PROPOSED PERCENT IMPERVIOUS	155,892 / 556,155 = 28.0%	
DISTURBED AREA:	87,120 SF (2.0 AC)	

BUILDING INFORMATION

40% MAXIMUM LOT COVERAGE (BUILDING)	
NUMBER OF BUILDINGS	1
EX. BUILDING AREA (12-BED FACILITY + ADMIN.)	30,059 SF
PROPOSED BUILDING (6-BED ADDITION, KITCHEN EXPANSION AND TOILET EXPANSION)	12,261 SF
HEIGHT (AT HIGHEST POINT)	20'-0" (1-STORY)
LOT COVERAGE	7.6% (EXISTING + PROPOSED)

SITE PARKING

18-BED IN-PATIENT FACILITY:

MINIMUM PARKING REQUIRED:	1 PER 2 BEDS (18), 1 PER SUPERVISOR & STAFF (16) = 25 SPACES
MAXIMUM PARKING ALLOWED:	1 PER 2 BEDS, 1 PER SUPERVISOR & STAFF = 38 SPACES (150%)
MINIMUM PARKING REQUIRED:	1 SPACE PER 300 SF (OFFICE/PROFESSIONAL) 19,500/300 = 65 SPACES
MAXIMUM PARKING ALLOWED:	1 SPACE PER 200 SF (OFFICE/PROFESSIONAL) 19,500/200 = 98 SPACES
MINIMUM PARKING REQUIRED (TOTAL):	90 SPACES
MAXIMUM PARKING ALLOWED (TOTAL):	136 SPACES
TOTAL PARKING PROVIDED:	90 SPACES
HANDICAP PARKING REQUIRED:	4 SPACES
HANDICAP PARKING PROVIDED:	4 SPACES

BICYCLE PARKING:

FIRST 25 PARKING SPACES:	5 BICYCLE SPACES REQUIRED
EACH ADDITIONAL 100 SPACES ABOVE 25:	5 BICYCLE SPACES REQUIRED
PARKING PROVIDED:	90 SPACES (TOTAL)
BICYCLE SPACES REQUIRED:	10 SPACES
BICYCLE SPACES PROVIDED:	10 SPACES (THIS PROJECT IS UTILIZING 10 SPACES FROM THE ADMINISTRATION BUILDING)

UTILITY INFORMATION

SANITARY SEWER
EX. SANITARY SEWER SERVICE IS PROVIDED IN FRONT OF PROPOSED ADDITION WITH A 6-INCH SERVICE.
SANITARY SEWER ALLOCATION PROVIDED BY CFPUA.
WATER
AN 8-INCH WATER MAIN IS LOOPED AROUND THE CAMPUS AND IS LOCATED AT THE FRONT AND REAR OF THE PROPOSED ADDITION. THE PROPOSED ADDITION WILL CONNECT WATER SERVICE TO EXISTING BUILDING.
EX. FIRE LINE IS ADEQUATE TO SUPPORT PROPOSED ADDITION.
GAS
BASED ON THE EXISTING CONDITIONS SURVEY, THERE IS A GAS METER AT THE REAR OF THE EXISTING 18-BED FACILITY THAT WILL NEED TO BE RELOCATED TO MEET CODE. GAS IS PROVIDED BY PIEDMONT NATURAL GAS

LANDSCAPING

15 TREES PER DISTURBED ACRE = 30 TREES TO BE RETAINED OR PLANTED IN AREA DISTURBED.

TOTAL AREA OF LANDSCAPE ISLANDS PROVIDED = 3,100 SF
(MINIMUM ISLAND PERMITTED = 216 SF)

SHADING REQUIRED = 20% OF NEW PARKING AREA (32,089 SF) = 6,418 SF REQUIRED [8,326 SF PROVIDED]
FOUNDATION PLANTING = 12% OF WALL AREA FOR ANY PORTION OF THE BUILDING ADJACENT TO PARKING
NORTH: 141 SF REQUIRED [148 SF PROVIDED]
SOUTH: 181 SF REQUIRED [182 SF PROVIDED]

STREETYARD BUFFER
MINIMUM STREET YARD: 4,050 SF (18 X LF OF STREET FRONTAGE = 18 X 225=4,050 SF) [4,475 SF PROVIDED]
(DEVELOPED PORTION ONLY)

BUFFERYARD SETBACK STANDARDS

	PROVIDED	REQUIRED
MINIMUM FRONT YARD:	0 FT	0 FT
MINIMUM SIDE YARD:	0 FT	0 FT
MINIMUM REAR YARD (ADJ. TO RESIDENTIAL):	20 FT	20 FT

FLOOD NOTE

THIS PARCEL DOES NOT LIE IN THE 100 YEAR FLOOD PLAIN AS DETERMINED BY FEMA PANEL 3720312600J WITH AN EFFECTIVE DATE OF APRIL 3, 2006.

SITE LIGHTING

EXTERIOR SITE LIGHTING MUST BE INSTALLED SO AS NOT TO SHINE ONTO ADJACENT RESIDENTIALLY USED OR ZONED PROPERTY.

OVERALL BOUNDARY MAP

SCALE: 1" = 300'

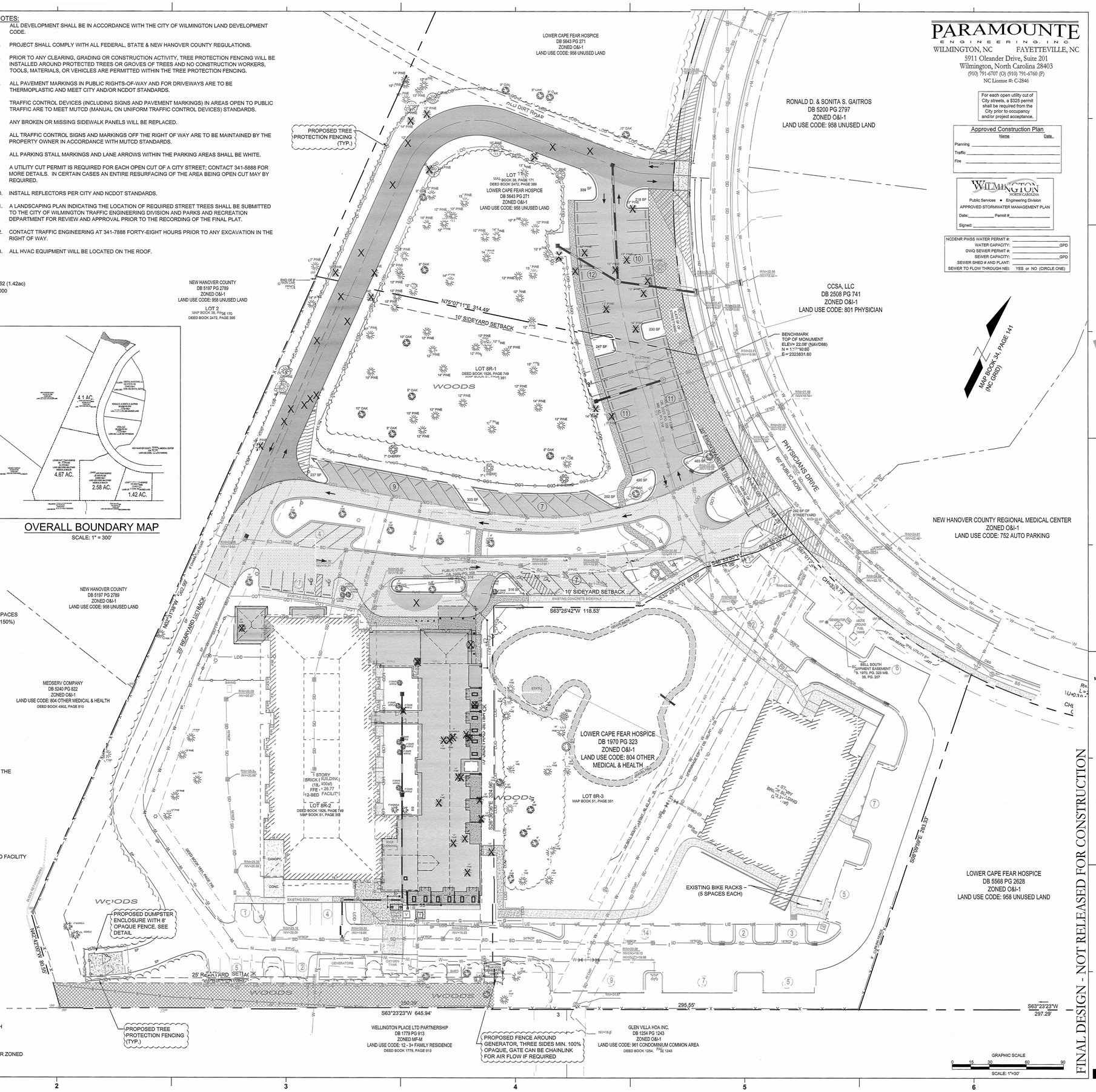

PARAMOUNTE
ENGINEERING, INC.
WILMINGTON, NC FAYETTEVILLE, NC
5911 Oleander Drive, Suite 201
Wilmington, North Carolina 28403
(910) 791-6707 (O) (910) 791-6760 (F)
NC License #: C-2846

For each open utility cut of City streets, a $325 permit shall be required from the City prior to occupancy and/or project acceptance.

Approved Construction Plan
Name Date
Planning
Traffic
Fire

WILMINGTON NORTH CAROLINA
Public Services • Engineering Division
APPROVED STORMWATER MANAGEMENT PLAN
Date: Permit #
Signed:

NCDENR PWSS WATER PERMIT #:
WATER CAPACITY: GPD
DWQ SEWER PERMIT #:
SEWER CAPACITY: GPD
SEWER SHED # AND PLANT:
SEWER TO FLOW THROUGH NBE: YES or NO (CIRCLE ONE)

Lower Cape Fear Hospice & LifeCare Center

LOWER CAPE FEAR HOSPICE WILMINGTON CARE CENTER - SIX BED ADDITION 1406 PHYSICIANS DR.

LS3P

LS3P ASSOCIATES LTD.
2528 INDEPENDENCE BLVD. SUITE 200
WILMINGTON, NORTH CAROLINA 28412
TEL. 910.790.9901 FAX 910.790.3111
WWW.LS3P.COM

NORTH CAROLINA PROFESSIONAL SEAL 031581 ENGINEER ROBERT P. BALLARD

MEMBERS OF THE AMERICAN INSTITUTE OF ARCHITECTS

COPYRIGHT 2012 ALL RIGHTS RESERVED
PRINTED OR ELECTRONIC DRAWINGS AND DOCUMENTATION MAY NOT BE REPRODUCED IN ANY FORM WITHOUT WRITTEN PERMISSION FROM LS3P ASSOCIATES LTD.

REVISIONS:

No.	Description	Date
1.	COW Planning Comments	3/5/13
2.	COW Traffic Comments	3/25/13
3.	COW Planning Comments	4/29/13

FINAL DESIGN - NOT RELEASED FOR CONSTRUCTION

PROJECT: 12217.PE
DATE: MAY 1, 2013
DRAWN BY: RPB
CHECKED BY: RPB

OVERALL SITE LAYOUT

C-2.0

SOLUTIONS THROUGH LISTENING
SERVICE BY DESIGN

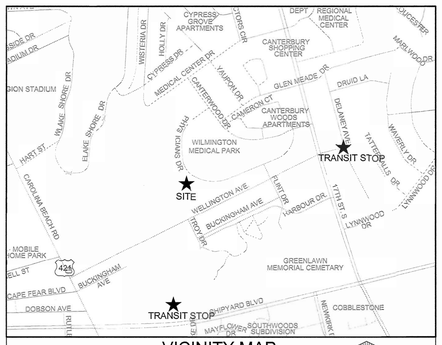

VICINITY MAP
SCALE: 1" = 500'

NOTES:

1. ALL DEVELOPMENT SHALL BE IN ACCORDANCE WITH THE CITY OF WILMINGTON LAND DEVELOPMENT CODE.
2. PROJECT SHALL COMPLY WITH ALL FEDERAL, STATE & NEW HANOVER COUNTY REGULATIONS.
3. PRIOR TO ANY CLEARING, GRADING OR CONSTRUCTION ACTIVITY, TREE PROTECTION FENCING WILL BE INSTALLED AROUND PROTECTED TREES OR GROVES OF TREES AND NO CONSTRUCTION WORKERS, TOOLS, MATERIALS, OR VEHICLES ARE PERMITTED WITHIN THE TREE PROTECTION FENCING.
4. ALL PAVEMENT MARKINGS IN PUBLIC RIGHTS-OF-WAY AND FOR DRIVEWAYS ARE TO BE THERMOPLASTIC AND MEET CITY AND/OR NCDOT STANDARDS.
5. TRAFFIC CONTROL DEVICES (INCLUDING SIGNS AND PAVEMENT MARKINGS) IN AREAS OPEN TO PUBLIC TRAFFIC ARE TO MEET MUTCD (MANUAL ON UNIFORM TRAFFIC CONTROL DEVICES) STANDARDS.
6. ANY BROKEN OR MISSING SIDEWALK PANELS WILL BE REPLACED.
7. ALL TRAFFIC CONTROL SIGNS AND MARKINGS OFF THE RIGHT OF WAY ARE TO BE MAINTAINED BY THE PROPERTY OWNER IN ACCORDANCE WITH MUTCD STANDARDS.
8. ALL PARKING STALL MARKINGS AND LANE ARROWS WITHIN THE PARKING AREAS SHALL BE WHITE.
9. A UTILITY CUT PERMIT IS REQUIRED FOR EACH OPEN CUT OF A CITY STREET; CONTACT 341-5888 FOR MORE DETAILS. IN CERTAIN CASES AN ENTIRE RESURFACING OF THE AREA BEING OPEN CUT MAY BY REQUIRED.
10. INSTALL REFLECTORS PER CITY AND NCDOT STANDARDS.
11. A LANDSCAPING PLAN INDICATING THE LOCATION OF REQUIRED STREET TREES SHALL BE SUBMITTED TO THE CITY OF WILMINGTON TRAFFIC ENGINEERING DIVISION AND PARKS AND RECREATION DEPARTMENT FOR REVIEW AND APPROVAL PRIOR TO THE RECORDING OF THE FINAL PLAT.
12. CONTACT TRAFFIC ENGINEERING AT 341-7888 FORTY-EIGHT HOURS PRIOR TO ANY EXCAVATION IN THE RIGHT OF WAY.
13. ALL HVAC EQUIPMENT WILL BE LOCATED ON THE ROOF.

SITE DATA TABULATION

CURRENT ZONING: O&I-1 (OFFICE AND INSTITUTIONAL DISTRICT 1)
LOWER CAPE FEAR HOSPICE & LIFECARE CENTER
1406 PHYSICIANS DRIVE
NEW HANOVER COUNTY PARCEL #: 3126-34-7646 (4.67ac), 3126-35-5297 (4.1ac), 3126-34-9694 (2.58ac), 3126-34-6862 (1.42ac)
TAX PARCEL IDENTIFICATION #: R06014-005-007-000, R06015-001-017-000, R06014-005-010-000 , R06014-005-011-000
RECORDED LOT #: 8R-3, M.B. 51, PG 351
CAMA LAND USE CLASSIFICATION: URBAN
MAXIMUM BUILDING HEIGHT: 45'

PROPOSED USE: MEDICAL FACILITY (12 EXISTING BEDS PLUS 6 PROPOSED BEDS, 18 TOTAL)

SETBACK STANDARDS

	PROVIDED	REQUIRED
MINIMUM FRONT SETBACK	256 FT.	20 FT.
MINIMUM SIDE SETBACK	49 FT. (WEST)	10 FT.
	10 FT. (EAST)	10 FT.
MINIMUM REAR SETBACK	84 FT.	25 FT.

SITE INFORMATION

MINIMUM LOT SIZE	556,155 SF (12.77 AC)	15,000 SF
PROPOSED IMPERVIOUS AREA		
TOTAL BUILDING (PROPOSED FOOTPRINT)	12,261 SF	
ROOF OVERHANG AREA (PROPOSED)	4,094 SF	
ON-SITE PARKING & DRIVEWAYS (PROPOSED)	32,089 SF	
ON-SITE SIDEWALKS (PROPOSED)	4,045 SF	
TOTAL PROPOSED IMP. AREA	52,489 SF	

EXISTING IMPERVIOUS AREA (LIFE CAR CENTER AND ADMINISTRATION BUILDING)

BUILDING (EXISTING)	30,059 SF
ON-SITE PARKING (EXISTING)	67,548 SF
ON-SITE SIDEWALKS (EXISTING)	12,087 SF
ON-SITE MISCELLANEOUS	1,140 SF
TOTAL EXISTING IMP. AREA	110,834 SF
ON-SITE EXIST. TO BE DEMOLISHED	7,431 SF
	103,403 SF
PROPOSED PERCENT IMPERVIOUS	155,892 / 556,155 = 28.0%
DISTURBED AREA:	87,120 SF (2.0 AC)

BUILDING INFORMATION

40% MAXIMUM LOT COVERAGE (BUILDING)	
NUMBER OF BUILDINGS	1
EX. BUILDING AREA (12-BED FACILITY + ADMIN.)	30,059 SF
PROPOSED BUILDING (6-BED ADDITION, KITCHEN EXPANSION AND TOILET EXPANSION)	12,261 SF
HEIGHT (AT HIGHEST POINT)	20'-0" (1-STORY)
LOT COVERAGE	7.6% (EXISTING + PROPOSED)

SITE PARKING

18-BED IN-PATIENT FACILITY:

MINIMUM PARKING REQUIRED:	1 PER 2 BEDS (18), 1 PER SUPERVISOR & STAFF (16) = 25 SPACES
MAXIMUM PARKING ALLOWED:	1 PER 2 BEDS, 1 PER SUPERVISOR & STAFF = 38 SPACES (150%)
MINIMUM PARKING REQUIRED:	1 SPACE PER 300 SF (OFFICE/PROFESSIONAL) 19,500/300 = 65 SPACES
MAXIMUM PARKING ALLOWED:	1 SPACE PER 200 SF (OFFICE/PROFESSIONAL) 19,500/200 = 98 SPACES
MINIMUM PARKING REQUIRED (TOTAL):	90 SPACES
MAXIMUM PARKING ALLOWED (TOTAL):	136 SPACES
TOTAL PARKING PROVIDED:	90 SPACES
HANDICAP PARKING REQUIRED:	4 SPACES
HANDICAP PARKING PROVIDED:	4 SPACES

BICYCLE PARKING:

FIRST 25 PARKING SPACES:	5 BICYCLE SPACES REQUIRED
EACH ADDITIONAL 100 SPACES ABOVE 25:	5 BICYCLE SPACES REQUIRED
PARKING PROVIDED:	90 SPACES (TOTAL)
BICYCLE SPACES REQUIRED:	10 SPACES
BICYCLE SPACES PROVIDED:	10 SPACES (THIS PROJECT IS UTILIZING 10 SPACES FROM THE ADMINISTRATION BUILDING)

UTILITY INFORMATION

SANITARY SEWER
EX. SANITARY SEWER SERVICE IS PROVIDED IN FRONT OF PROPOSED ADDITION WITH A 6-INCH SERVICE.
SANITARY SEWER ALLOCATION PROVIDED BY CFPUA.
WATER
AN 8-INCH WATER MAIN IS LOOPED AROUND THE CAMPUS AND IS LOCATED AT THE FRONT AND REAR OF THE PROPOSED ADDITION. THE PROPOSED ADDITION WILL CONNECT WATER SERVICE TO EXISTING BUILDING.
EX. FIRE LINE IS ADEQUATE TO SUPPORT PROPOSED ADDITION.
GAS
BASED ON THE EXISTING CONDITIONS SURVEY, THERE IS A GAS METER AT THE REAR OF THE EXISTING 18-BED FACILITY THAT WILL NEED TO BE RELOCATED TO MEET CODE. GAS IS PROVIDED BY PIEDMONT NATURAL GAS

LANDSCAPING

15 TREES PER DISTURBED ACRE = 30 TREES TO BE RETAINED OR PLANTED IN AREA DISTURBED.

TOTAL AREA OF LANDSCAPE ISLANDS PROVIDED = 3,100 SF
(MINIMUM ISLAND PERMITTED = 216 SF)

SHADING REQUIRED = 20% OF NEW PARKING AREA (32,089 SF) = 6,418 SF REQUIRED [8,326 SF PROVIDED]

FOUNDATION PLANTING = 12% OF WALL AREA FOR ANY PORTION OF THE BUILDING ADJACENT TO PARKING
NORTH: 141 SF REQUIRED [148 SF PROVIDED]
SOUTH: 181 SF REQUIRED [182 SF PROVIDED]

STREETYARD BUFFER

MINIMUM STREET YARD: 4,050 SF (18 X LF OF STREET FRONTAGE = 18 X 225=4,050 SF) [4,475 SF PROVIDED]
(DEVELOPED PORTION ONLY)

BUFFERYARD SETBACK STANDARDS

	PROVIDED	REQUIRED
MINIMUM FRONT YARD:	0 FT	0 FT
MINIMUM SIDE YARD:	0 FT	0 FT
MINIMUM REAR YARD (ADJ. TO RESIDENTIAL):	20 FT	20 FT

FLOOD NOTE

THIS PARCEL DOES NOT LIE IN THE 100 YEAR FLOOD PLAIN AS DETERMINED BY FEMA PANEL 3720312600J WITH AN EFFECTIVE DATE OF APRIL 3, 2006.

SITE LIGHTING

EXTERIOR SITE LIGHTING MUST BE INSTALLED SO AS NOT TO SHINE ONTO ADJACENT RESIDENTIALLY USED OR ZONED PROPERTY.

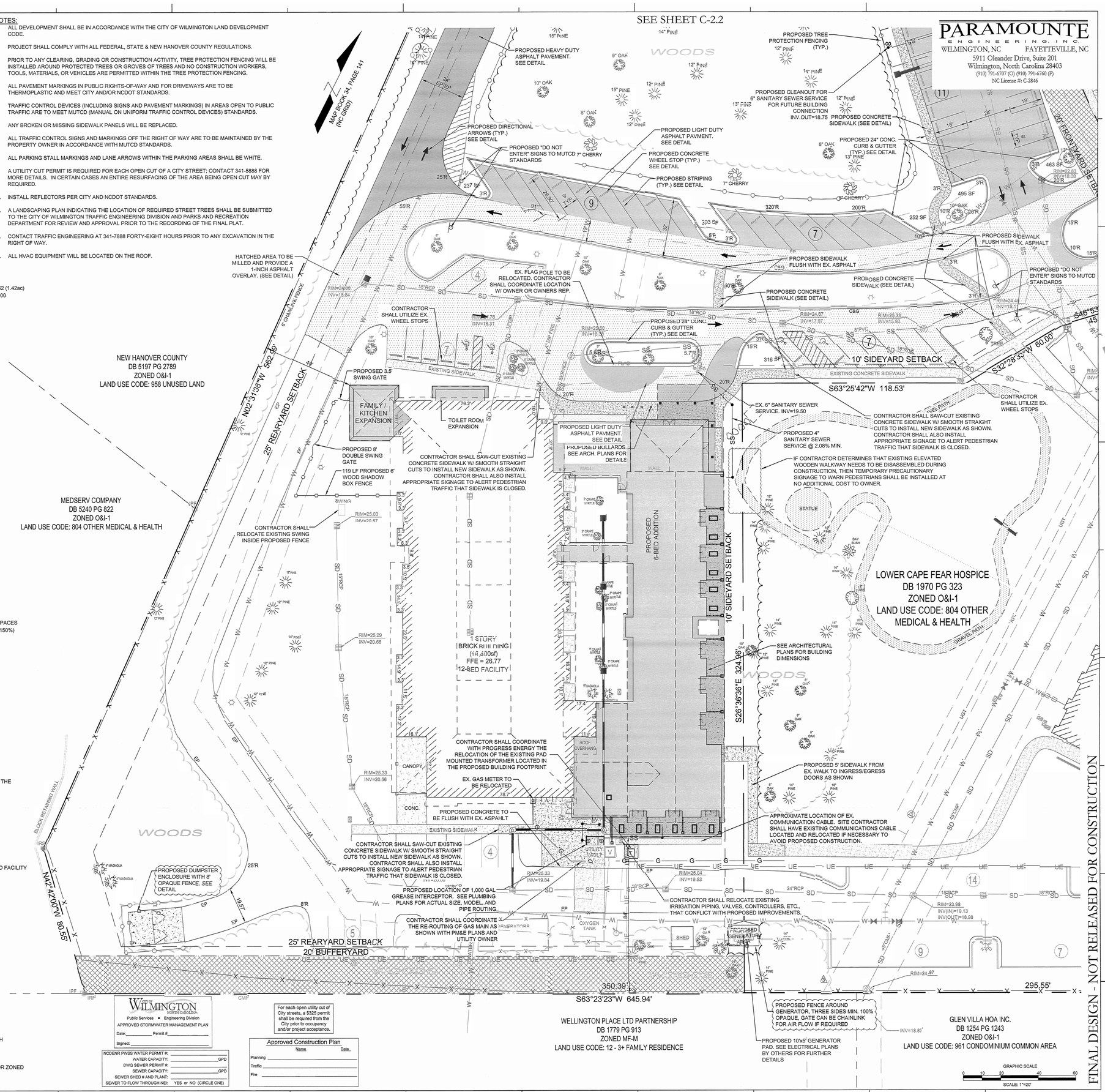

CITY OF WILMINGTON NORTH CAROLINA
Public Services • Engineering Division
APPROVED STORMWATER MANAGEMENT PLAN
Date:_____ Permit #:_____
Signed:_____

NCDENR PWSS WATER PERMIT #:
WATER CAPACITY: _____GPD
DWQ SEWER PERMIT #:
SEWER CAPACITY: _____GPD
SEWER SHED # AND PLANT:
SEWER TO FLOW THROUGH NEI: YES or NO (CIRCLE ONE)

For each open utility cut of City streets, a $325 permit shall be required from the City prior to occupancy and/or project acceptance.

Approved Construction Plan

	Name	Date
Planning		
Traffic		
Fire		

Lower Cape Fear Hospice & LifeCareCenter

LOWER CAPE FEAR HOSPICE WILMINGTON CARE CENTER - SIX BED ADDITION 1406 PHYSICIANS DR.

LS3P

LS3P ASSOCIATES LTD.
2528 INDEPENDENCE BLVD. SUITE 200
WILMINGTON, NORTH CAROLINA 28412
TEL. 910.790.9901 FAX 910.790.3111
WWW.LS3P.COM

NORTH CAROLINA ARCHITECT SEAL 031591 5/1/13 ROBERT P. BALLARD

MEMBERS OF THE AMERICAN INSTITUTE OF ARCHITECTS

COPYRIGHT 2012 ALL RIGHTS RESERVED
PRINTED OR ELECTRONIC DRAWINGS AND DOCUMENTATION MAY NOT BE REPRODUCED IN ANY FORM WITHOUT WRITTEN PERMISSION FROM LS3P ASSOCIATES LTD.

REVISIONS:

No.	Description	Date
1.	COW Planning Comments	3/5/13
2.	COW Traffic Comments	3/25/13
3.	COW Planning Comments	4/23/13
4.	COW Planning Comments	4/29/13

PROJECT: 12217.PE
DATE: MAY 1, 2013
DRAWN BY: RPB
CHECKED BY: RPB

FINAL DESIGN - NOT RELEASED FOR CONSTRUCTION

SITE & UTILITY LAYOUT

C-2.1

SOLUTIONS THROUGH LISTENING
SERVICE BY DESIGN

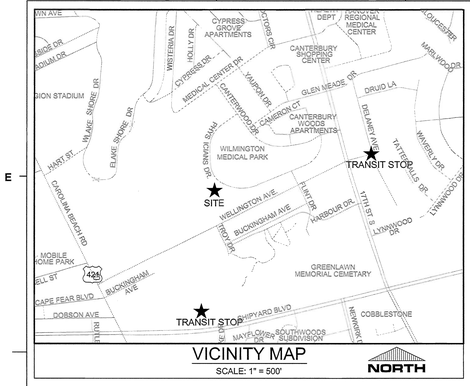

VICINITY MAP

SCALE: 1" = 500'

NORTH

NOTES:

1. ALL DEVELOPMENT SHALL BE IN ACCORDANCE WITH THE CITY OF WILMINGTON LAND DEVELOPMENT CODE.
2. PROJECT SHALL COMPLY WITH ALL FEDERAL, STATE & NEW HANOVER COUNTY REGULATIONS.
3. PRIOR TO ANY CLEARING, GRADING OR CONSTRUCTION ACTIVITY, TREE PROTECTION FENCING WILL BE INSTALLED AROUND PROTECTED TREES OR GROVES OF TREES AND NO CONSTRUCTION WORKERS, TOOLS, MATERIALS, OR VEHICLES ARE PERMITTED WITHIN THE TREE PROTECTION FENCING.
4. ALL PAVEMENT MARKINGS IN PUBLIC RIGHTS-OF-WAY AND FOR DRIVEWAYS ARE TO BE THERMOPLASTIC AND MEET CITY AND/OR NCDOT STANDARDS.
5. TRAFFIC CONTROL DEVICES (INCLUDING SIGNS AND PAVEMENT MARKINGS) IN AREAS OPEN TO PUBLIC TRAFFIC ARE TO MEET MUTCD (MANUAL ON UNIFORM TRAFFIC CONTROL DEVICES) STANDARDS.
6. ANY BROKEN OR MISSING SIDEWALK PANELS WILL BE REPLACED.
7. ALL TRAFFIC CONTROL SIGNS AND MARKINGS OFF THE RIGHT OF WAY ARE TO BE MAINTAINED BY THE PROPERTY OWNER IN ACCORDANCE WITH MUTCD STANDARDS.
8. ALL PARKING STALL MARKINGS AND LANE ARROWS WITHIN THE PARKING AREAS SHALL BE WHITE.
9. A UTILITY CUT PERMIT IS REQUIRED FOR EACH OPEN CUT OF A CITY STREET; CONTACT 341-5888 FOR MORE DETAILS. IN CERTAIN CASES AN ENTIRE RESURFACING OF THE AREA BEING OPEN CUT MAY BY REQUIRED.
10. INSTALL REFLECTORS PER CITY AND NCDOT STANDARDS.
11. A LANDSCAPING PLAN INDICATING THE LOCATION OF REQUIRED STREET TREES SHALL BE SUBMITTED TO THE CITY OF WILMINGTON TRAFFIC ENGINEERING DIVISION AND PARKS AND RECREATION DEPARTMENT FOR REVIEW AND APPROVAL PRIOR TO THE RECORDING OF THE FINAL PLAT.
12. CONTACT TRAFFIC ENGINEERING AT 341-7888 FORTY-EIGHT HOURS PRIOR TO ANY EXCAVATION IN THE RIGHT OF WAY.
13. ALL HVAC EQUIPMENT WILL BE LOCATED ON THE ROOF.

SITE DATA TABULATION

CURRENT ZONING: O&I-1 (OFFICE AND INSTITUTIONAL DISTRICT 1)
LOWER CAPE FEAR HOSPICE & LIFECARE CENTER
1406 PHYSICIANS DRIVE
NEW HANOVER COUNTY PARCEL #: 3126-34-7646 (4.67ac), 3126-35-5297 (4.1ac), 3126-34-9694 (2.58ac), 3126-34-6862 (1.42ac)
TAX PARCEL IDENTIFICATION #: R06014-005-007-000, R06015-001-017-000, R06014-005-010-000 , R06014-005-011-000
RECORDED LOT #: 8R-3, M.B. 51, PG 351
CAMA LAND USE CLASSIFICATION: URBAN
MAXIMUM BUILDING HEIGHT: 45'

PROPOSED USE: MEDICAL FACILITY (12 EXISTING BEDS PLUS 6 PROPOSED BEDS, 18 TOTAL)

SETBACK STANDARDS

	PROVIDED	REQUIRED
MINIMUM FRONT SETBACK	256 FT.	20 FT.
MINIMUM SIDE SETBACK	49 FT. (WEST)	10 FT.
	10 FT. (EAST)	10 FT.
MINIMUM REAR SETBACK	84 FT.	25 FT.

SITE INFORMATION

MINIMUM LOT SIZE	556,155 SF (12.77 AC)	15,000 SF
PROPOSED IMPERVIOUS AREA		
TOTAL BUILDING (PROPOSED FOOTPRINT)	12,261 SF	
ROOF OVERHANG AREA (PROPOSED)	4,094 SF	
ON-SITE PARKING & DRIVEWAYS (PROPOSED)	32,089 SF	
ON-SITE SIDEWALKS (PROPOSED)	4,045 SF	
TOTAL PROPOSED IMP. AREA	52,489 SF	
EXISTING IMPERVIOUS AREA (LIFE CAR CENTER AND ADMINISTRATION BUILDING)		
BUILDING (EXISTING)	30,059 SF	
ON-SITE PARKING (EXISTING)	67,548 SF	
ON-SITE SIDEWALKS (EXISTING)	12,087 SF	
ON-SITE MISCELLANEOUS	1,140 SF	
TOTAL EXISTING IMP. AREA	110,834 SF	
ON-SITE EXIST. TO BE DEMOLISHED	7,431 SF	
	103,403 SF	
PROPOSED PERCENT IMPERVIOUS	155,892 / 556,155 = 28.0%	
DISTURBED AREA:	87,120 SF (2.0 AC)	

BUILDING INFORMATION

40% MAXIMUM LOT COVERAGE (BUILDING)	
NUMBER OF BUILDINGS	1
EX. BUILDING AREA (12-BED FACILITY + ADMIN.)	30,059 SF
PROPOSED BUILDING (6-BED ADDITION, KITCHEN EXPANSION AND TOILET EXPANSION)	12,261 SF
HEIGHT (AT HIGHEST POINT)	20'-0" (1-STORY)
LOT COVERAGE	7.6% (EXISTING + PROPOSED)

SITE PARKING

18-BED IN-PATIENT FACILITY:

MINIMUM PARKING REQUIRED:	1 PER 2 BEDS (18), 1 PER SUPERVISOR & STAFF (16) = 25 SPACES
MAXIMUM PARKING ALLOWED:	1 PER 2 BEDS, 1 PER SUPERVISOR & STAFF = 38 SPACES (150%)
MINIMUM PARKING REQUIRED:	1 SPACE PER 300 SF (OFFICE/PROFESSIONAL) 19,500/300 = 65 SPACES
MAXIMUM PARKING ALLOWED:	1 SPACE PER 200 SF (OFFICE/PROFESSIONAL) 19,500/200 = 98 SPACES
MINIMUM PARKING REQUIRED (TOTAL):	90 SPACES
MAXIMUM PARKING ALLOWED (TOTAL):	136 SPACES
TOTAL PARKING PROVIDED:	90 SPACES
HANDICAP PARKING REQUIRED:	4 SPACES
HANDICAP PARKING PROVIDED:	4 SPACES

BICYCLE PARKING:

FIRST 25 PARKING SPACES:	5 BICYCLE SPACES REQUIRED
EACH ADDITIONAL 100 SPACES ABOVE 25:	5 BICYCLE SPACES REQUIRED
PARKING PROVIDED:	90 SPACES (TOTAL)
BICYCLE SPACES REQUIRED:	10 SPACES
BICYCLE SPACES PROVIDED:	10 SPACES (THIS PROJECT IS UTILIZING 10 SPACES FROM THE ADMINISTRATION BUILDING)

UTILITY INFORMATION

SANITARY SEWER
EX. SANITARY SEWER SERVICE IS PROVIDED IN FRONT OF PROPOSED ADDITION WITH A 6-INCH SERVICE.
SANITARY SEWER ALLOCATION PROVIDED BY CFPUA.
WATER
AN 8-INCH WATER MAIN IS LOOPED AROUND THE CAMPUS AND IS LOCATED AT THE FRONT AND REAR OF THE PROPOSED ADDITION. THE PROPOSED ADDITION WILL CONNECT WATER SERVICE TO EXISTING BUILDING.
EX. FIRE LINE IS ADEQUATE TO SUPPORT PROPOSED ADDITION.
GAS
BASED ON THE EXISTING CONDITIONS SURVEY, THERE IS A GAS METER AT THE REAR OF THE EXISTING 18-BED FACILITY THAT WILL NEED TO BE RELOCATED TO MEET CODE. GAS IS PROVIDED BY PIEDMONT NATURAL GAS

LANDSCAPING

15 TREES PER DISTURBED ACRE = 30 TREES TO BE RETAINED OR PLANTED IN AREA DISTURBED.

TOTAL AREA OF LANDSCAPE ISLANDS PROVIDED = 3,100 SF
(MINIMUM ISLAND PERMITTED = 216 SF)

SHADING REQUIRED = 20% OF NEW PARKING AREA (32,089 SF) = 6,418 SF REQUIRED [8,326 SF PROVIDED]

FOUNDATION PLANTING = 12% OF WALL AREA FOR ANY PORTION OF THE BUILDING ADJACENT TO PARKING AND
NORTH: 141 SF REQUIRED [148 SF PROVIDED]
SOUTH: 181 SF REQUIRED [182 SF PROVIDED]

STREETYARD BUFFER

MINIMUM STREET YARD: 4,050 SF (18 X LF OF STREET FRONTAGE = 18 X 225=4,050 SF) [4,475 SF PROVIDED] (DEVELOPED PORTION ONLY)

BUFFERYARD SETBACK STANDARDS

	PROVIDED	REQUIRED
MINIMUM FRONT YARD:	0 FT	0 FT
MINIMUM SIDE YARD:	0 FT	0 FT
MINIMUM REAR YARD (ADJ. TO RESIDENTIAL):	20 FT	20 FT

FLOOD NOTE

THIS PARCEL DOES NOT LIE IN THE 100 YEAR FLOOD PLAIN AS DETERMINED BY FEMA PANEL 3720312600J WITH AN EFFECTIVE DATE OF APRIL 3, 2006.

SITE LIGHTING

EXTERIOR SITE LIGHTING MUST BE INSTALLED SO AS NOT TO SHINE ONTO ADJACENT RESIDENTIALLY USED OR ZONED PROPERTY.

CITY OF WILMINGTON NORTH CAROLINA
Public Services • Engineering Division
APPROVED STORMWATER MANAGEMENT PLAN
Date:_____ Permit #:_____
Signed: _____

NCDENR PWSS WATER PERMIT #: _____
WATER CAPACITY: _____GPD
DWQ SEWER PERMIT #: _____
SEWER CAPACITY: _____GPD
SEWER SHED # AND PLANT: _____
SEWER TO FLOW THROUGH NEI: YES or NO (CIRCLE ONE)

For each open utility cut of City streets, a $325 permit shall be required from the City prior to occupancy and/or project acceptance.

Approved Construction Plan
Name Date
Planning _____
Traffic _____
Fire _____

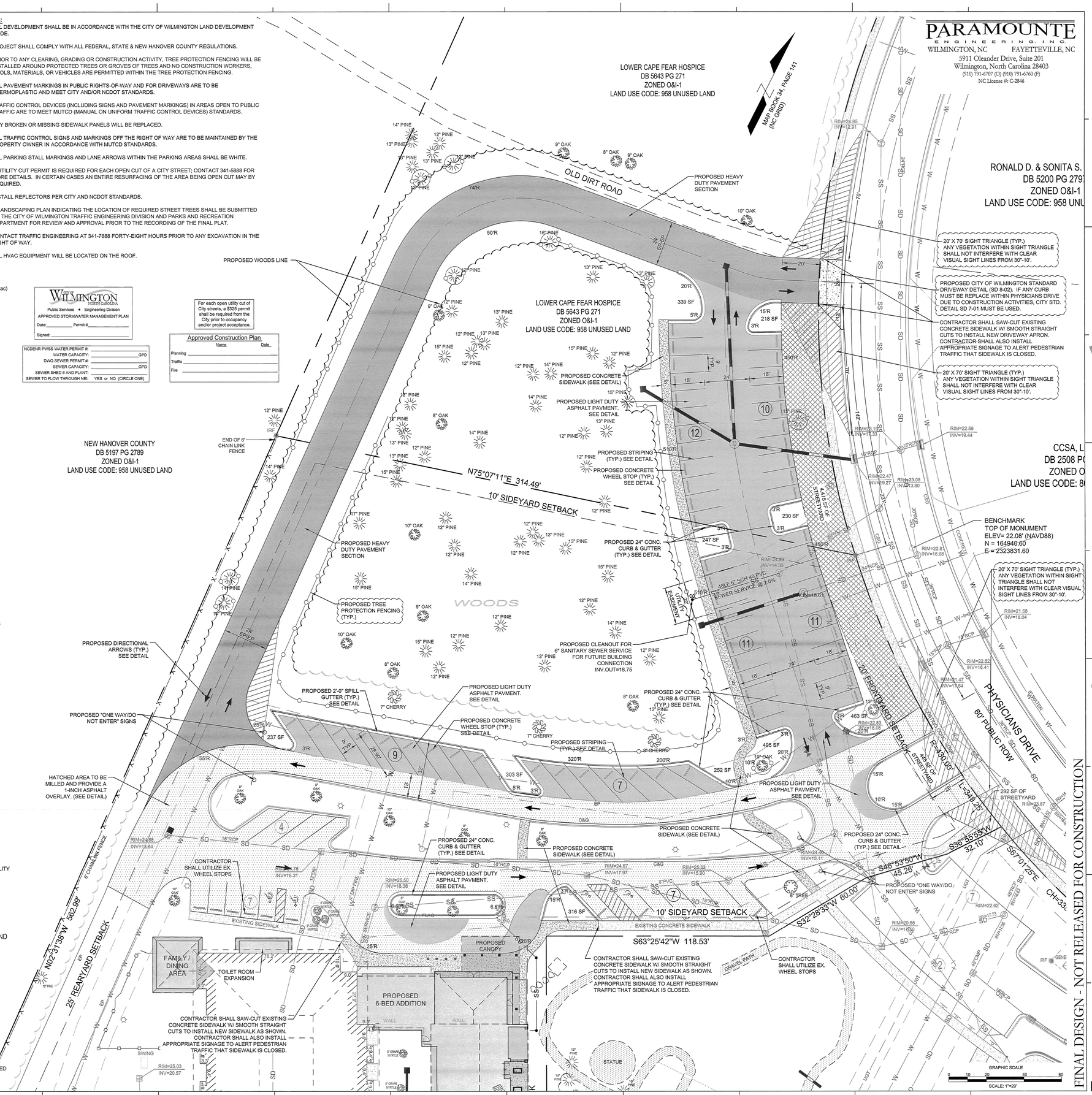

SEE SHEET C-2.1

FINAL DESIGN - NOT RELEASED FOR CONSTRUCTION

Lower Cape Fear Hospice & LifeCareCenter

LOWER CAPE FEAR HOSPICE WILMINGTON CARE CENTER - SIX BED ADDITION 1406 PHYSICIANS DR.

LS3P

LS3P ASSOCIATES LTD.
2528 INDEPENDENCE BLVD. SUITE 200
WILMINGTON, NORTH CAROLINA 28412
TEL. 910.790.9901 FAX 910.790.3111
WWW.LS3P.COM

NORTH CAROLINA PROFESSIONAL SEAL 031591 ENGINEER ROBERT P. BALLARD

MEMBERS OF THE AMERICAN INSTITUTE OF ARCHITECTS

COPYRIGHT 2012 ALL RIGHTS RESERVED
PRINTED OR ELECTRONIC DRAWINGS AND DOCUMENTATION MAY NOT BE REPRODUCED IN ANY FORM WITHOUT WRITTEN PERMISSION FROM LS3P ASSOCIATES LTD.

REVISIONS:

No.	Description	Date
1.	COW Planning Comments	3/5/13
2.	COW Traffic Comments	3/25/13
3.	COW Planning Comments	4/29/13

PROJECT: 12217.PE
DATE: MAY 1, 2013
DRAWN BY: RPB
CHECKED BY: RPB

SITE & UTILITY LAYOUT

C-2.2

SOLUTIONS THROUGH LISTENING
SERVICE BY DESIGN

PARAMOUNTE
ENGINEERING, INC
WILMINGTON, NC FAYETTEVILLE, NC
5911 Oleander Drive, Suite 201
Wilmington, North Carolina 28403
(910) 791-6707 (O) (910) 791-6760 (F)
NC License #: C-2846

Lower Cape Fear Hospice & LifeCareCenter

LOWER CAPE FEAR HOSPICE WILMINGTON CARE CENTER - SIX BED ADDITION 1406 PHYSICIANS DR.

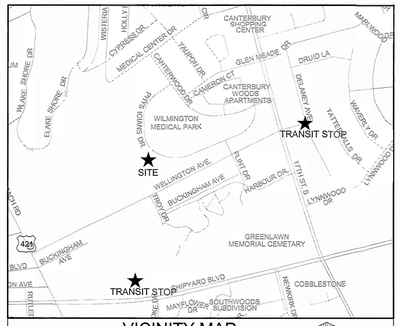

VICINITY MAP
SCALE: 1" = 500'
NORTH

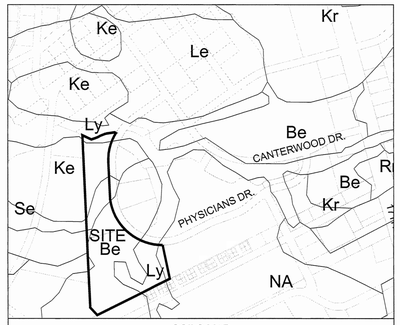

SOILS MAP
1"=500'

SITE INVENTORY DATA	
1. PREPARER OF THE PLAN:	PARAMOUNTE ENGINEERING 5911 OLEANDER DRIVE, SUITE 201 WILMINGTON, NC 28403
2. APPLICANT NAME:	LOWER CAPE FEAR HOSPICE
3. SITE ADDRESS:	1406 PHYSICIANS DRIVE WILMINGTON, NC 28401
4. PROPERTY OWNER:	LOWER CAPE FEAR HOSPICE
5. DEVELOPER:	LOWER CAPE FEAR HOSPICE
6. PROPERTY BOUNDARY:	SEE PLAN
7. ZONING:	O&I-1
8. ADJACENT PROPERTY INFORMATION (OWNER AND ZONING):	SEE PLAN
9. VICINITY MAP:	SEE MAP BELOW
10. TOPOGRAPHY:	SEE PLAN
11. 100 YEAR FLOOD PLAIN BOUNDARY:	SITE IS NOT LOCATED IN THE 100 YEAR FLOOD PLAIN
12. LOCATION OF EXISTING DITCHES, CREEKS, AND STREAMS:	SEE PLAN
13. SOILS:	Be - BAYMEADE Ly - LYNN HAVEN FINE SAND (SEE SOILS MAP ABOVE)
14. CAMA AEC & ASSOCIATED SETBACKS:	N/A
15. CAMA LAND CLASSIFICATION:	URBAN
16. CONSERVATION RESOURCES:	N/A
17. LOCAL, STATE, OR FEDERAL HISTORIC OR ARCHAEOLOGICAL SITE:	N/A
18. LOCATION OF CEMETERIES, BURIAL SITES, OR BURIAL GROUNDS:	GREENLAWN MEMORIAL PARK 1311 SHIPYARD BLVD. SEE VICINITY MAP BELOW
19. SQUARE FOOTAGE OF FORESTED AREA, HABITAT, AND DOMINANT SPECIES:	SITE IS PARITALLY WOODED ON SURVEY
20. SECTION 404 WETLANDS AND SECTION 10 WATERS:	WETLANDS EXISTING ON THE NORTHERN MOST PORTION OF THE LAND AS DELINIEATED BY LAND MANAGEMENT GROUP AND A JD ISSUED BY THE USCOE.
21. PROTECTED SPECIES OR HABITAT:	N/A
22. THOROUGHFARES, BIKE ROUTES, SIDEWALKS, TRANSIT FACILITIES (EXISTING OR PROPOSED):	SEE PLAN AND VICINITY MAP

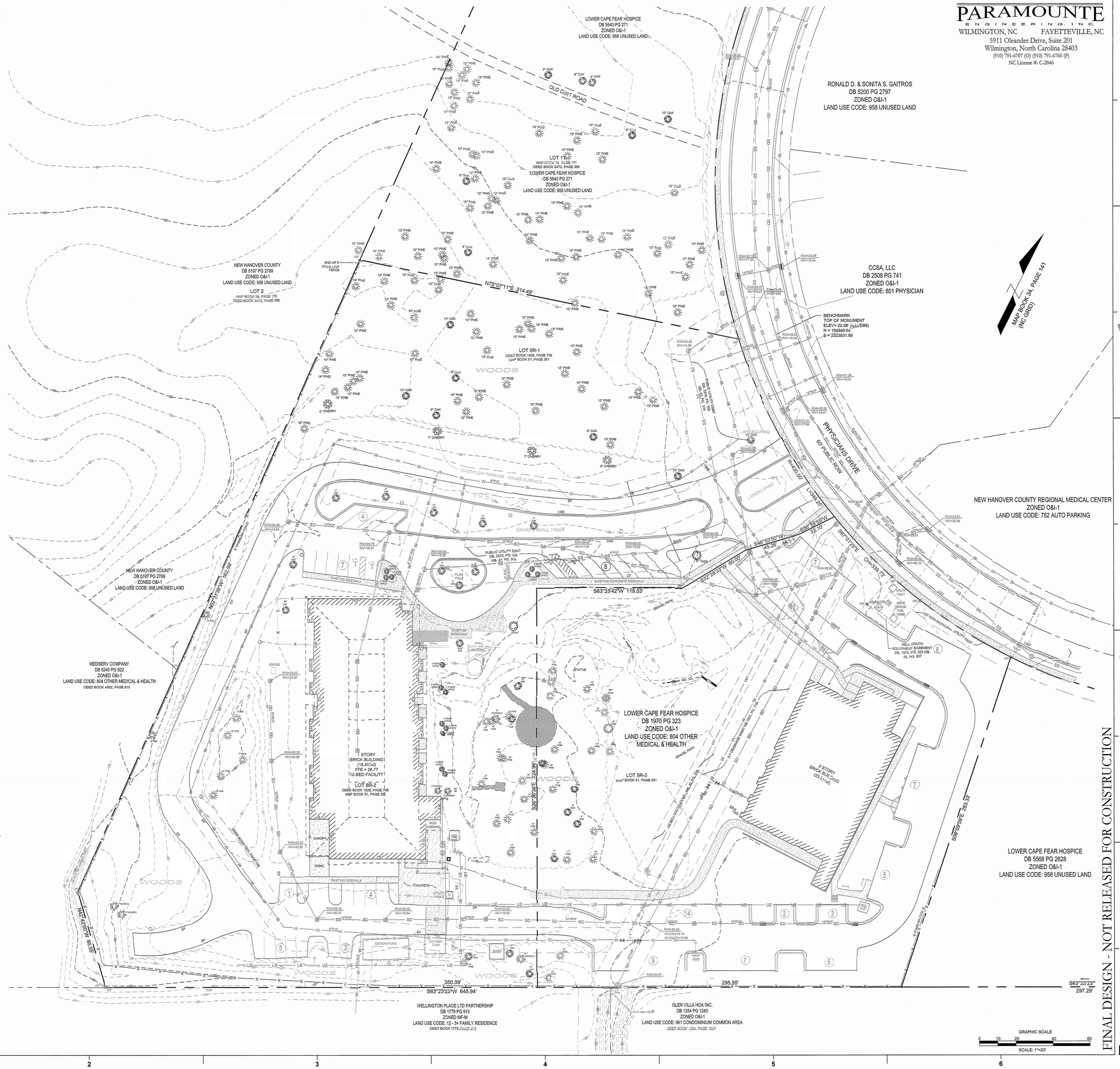

LS3P ASSOCIATES LTD.
2528 INDEPENDENCE BLVD. SUITE 200
WILMINGTON, NORTH CAROLINA 28412
TEL. 910.790.9901 FAX 910.790.3111
WWW.LS3P.COM

NORTH CAROLINA PROFESSIONAL SEAL 031591 ENGINEER RUSSELL P. BALLARD

MEMBERS OF THE AMERICAN INSTITUTE OF ARCHITECTS

COPYRIGHT 2012 ALL RIGHTS RESERVED
PRINTED OR ELECTRONIC DRAWINGS AND DOCUMENTATION MAY NOT BE REPRODUCED IN ANY FORM WITHOUT WRITTEN PERMISSION FROM LS3P ASSOCIATES LTD.

REVISIONS:

No.	Description	Date
1.	COW Planning Comments	4/29/13

PROJECT: 12217.PE
DATE: MAY 1, 2013
DRAWN BY: RPB
CHECKED BY: RPB

FINAL DESIGN - NOT RELEASED FOR CONSTRUCTION

SITE INVENTORY MAP

C-2.3

SOLUTIONS THROUGH LISTENING
SERVICE BY DESIGN

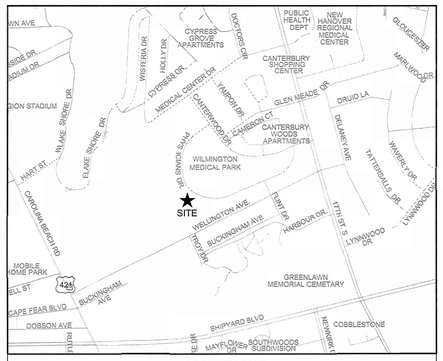

VICINITY MAP
1"=500'

LEGEND:

29	EXISTING CONTOUR
29	PROPOSED CONTOUR
EG=25.05	EXISTING SPOT ELEVATION
PG=25.05	PROPOSED EDGE OF PAVEMENT
EP=25.05	PROPOSED EDGE OF PAVEMENT
SW=25.05	PROPOSED SIDEWALK ELEVATION
TC=25.05	PROPOSED TOP OF CURB ELEVATION
	INLET PROTECTION
	LIMITS OF DISTURBANCE
LOD	SILT FENCE
	DRAINAGE FLOW PATH
CI-1	DRAINAGE INLET LABEL

NOTATION:

CI	=	CURB INLET
DI	=	DROP INLET
CO	=	CLEANOUT
DDI	=	DOUBLE DROP INLET
MH	=	STORM DRAIN MANHOLE
FFE	=	FINISHED FLOOR ELEVATION
BPE	=	BUILDING PAD ELEVATION

SPILL GUTTER
(REVERSE GUTTER, SEE DETAIL)

STORM SEWER TABLE

Line ID	Line Length (ft)	Pipe Size (in)	Pipe Slope (%)	Inv Elev Dn (ft)	Inv Elev Up (ft)	Grnd/Rim Dn (ft)	Grnd/Rim Up (ft)	Pipe Material	Structure Type
EX CI-1 TO OUT	27	18	7.23	17.33	19.27	23.19	22.47	EX. RCP	Ex. Curb Inlet
MH-2 TO EX CI-1	62	18	0.50	19.27	19.58	22.47	24.51	CL. III RCP **	Manhole
DI-3 TO MH-2	94	15	0.50	19.58	20.05	24.51	23.25	CL. III RCP **	Drop Inlet
DI-4 TO MH-2	57	18	0.51	19.58	19.87	24.51	24.00	CL. III RCP **	Drop Inlet
MH-5 TO OUT	64	24	0.50	16.98	17.30	22.81	25.05	EX. RCP	Ex. Curb Inlet
DI-6 TO MH-5	57	18	0.51	17.30	17.59	25.05	25.50	CL. III RCP **	Drop Inlet
CI-7 TO OUT	114	18	0.51	17.50	18.08	20.65	22.98	EX. RCP	Curb Inlet
EX DI-8 TO OUT	157	18	0.30	17.50	17.97	20.65	24.67	EX. RCP	Ex. Drop Inlet
EX DI-9 TO EX DI-8	138	18	0.25	17.97	18.31	24.67	24.76	EX. RCP	Ex. Drop Inlet
EX DI-10 TO EX DI-9	78	15	0.42	18.31	18.64	24.76	24.88	EX. RCP	Ex. Drop Inlet *
EX CO-11 TO EX DI-9	51	12	2.82	18.31	19.75	24.76	25.00	EX. DIP	Ex. Cleanout
EXDI-12 TO EXMH-11	132	24	0.30	19.13	19.53	23.98	25.04	EX. RCP	Ex. Drop Inlet
EXDI-13 TO EXDI-12	81	18	0.38	19.53	19.84	25.04	25.33	EX. RCP	Ex. Drop Inlet
EXDI-14 TO EXDI-13	56	18	0.29	19.84	20.00	25.33	25.16	EX. RCP	Ex. Drop Inlet
EXDI-15 TO EXDI-14	62	15	0.90	20.00	20.56	25.16	25.33	EX. RCP	Ex. Drop Inlet
EXDI-16 TO EXDI-15	75	15	0.16	20.56	20.68	25.33	25.29	EX. RCP	Ex. Drop Inlet
EXDI-17 TO EXDI-16	65	15	-0.17	20.68	20.57	25.29	25.03	EX. RCP	Ex. Drop Inlet
MH-18 TO EXDI-13	32	12	0.53	19.84	20.01	25.33	26.30	CL. III RCP **	Manhole
MH-19 TO MH-18	49	12	0.56	20.01	20.28	26.30	26.00	CL. III RCP **	Manhole
DI-20 TO MH-19	85	12	0.49	20.28	20.70	26.00	26.00	CL. 50 DIP ***	Drop Inlet
DI-21 TO DI-20	45	12	0.49	20.70	20.92	26.00	26.00	CL. 50 DIP ***	Drop Inlet
DI-22 TO DI-21	37	12	0.49	20.92	21.10	26.00	26.00	CL. 50 DIP ***	Drop Inlet

* CONTRACTOR SHALL INSTALL A NEW DROP INLET FRAME, GRATE AND BOX ADJACENT TO EXISTING DROP INLET TO ACHIEVE A DOUBLE DROP INLET.

** CONTRACTOR SHALL USE ADS N-12 HDPE OR CL.III RCP FOR STORM SEWER. IF FIELD CONDITIONS INDICATE LESS THAN TWO FEET OF COVER, CL.IV RCP SHALL BE USED.

*** CLASS 51 DUCTILE IRON PIPE MEETING THE REQUIREMENTS OF ASTM A-746 AND ANSI A21.51 WITH RUBBER GASKETED PUSH-ON JOINTS. DUCTILE IRON PIPE SHALL BE CEMENT LINED WITH AN ASPHALT SEALCOAT.

ASPHALT AREA NOTE:

1. SITE CONTRACTOR SHALL STRIP TOPSOIL AND ANY UNSUITALBE MATERIAL AND PROVIDE CUT/FILL OPERATIONS TO PROVIDE A COMPACTED CONTROLLED SUBGRADE, IN ACCORDANCE WITH THE SUBSURFACE GEOTECHNICAL EXPLORATION AND TECHNICAL SPECIFICATIONS.

BUILDING PAD NOTE:

1. SITE CONTRACTOR SHALL STRIP TOPSOIL AND ANY UNSUITALBE MATERIAL AND PROVIDE CUT/FILL OPERATIONS TO PROVIDE A COMPACTED CONTROLLED BUILDING PAD, IN ACCORDANCE WITH THE SUBSURFACE GEOTECHNICAL EXPLORATION AND TECHNICAL SPECIFICATIONS.

STORMWATER NOTE:

1. THIS PROJECT DRAINS TO AN OFF-SITE STORMWATER RETENTION SYSTEM (SILVER STREAM REGIONAL FACILITY - SW8 921002) OPERATED AND MAINTAINED BY THE CITY OF WILMINGTON.

2. THE BUILT UPON AREA ALLOTTED TO THIS DEVELOPMENT BY STORMWATER MANAGEMENT PERMIT NO. SW8 921002 MODIFICATION, IS O&I ZONING AT 75% MAXIMUM BUA.

GENERAL NOTES:

1. ALL CONSTRUCTION TO BE IN ACCORDANCE WITH ALL CITY OF WILMINGTON AND NEW HANOVER COUNTY STANDARDS AND SPECIFICATIONS.

2. THE CONTRACTOR SHALL PLACE INLET PROTECTION AROUND ALL STORM DRAIN INLETS TO PROTECT THE SYSTEM FROM COLLECTING SEDIMENTATION DURING CONSTRUCTION. INLET PROTECTION SHALL REMAIN IN PLACE UNTIL THE PARKING LOT IS PAVED.

3. CONTRACTOR SHALL ADJUST ALL FRAMES OF EX. UTILITY INFRASTRUCTURE WITHIN ASPHALT OVERLAY AREAS TO MATCH PROPOSED GRADES.

4. ALL PROPOSED SPOT ELEVATIONS SHOWN IN THE PARKING LOT ARE PROPOSED EDGE OF PAVEMENT OR FACE OF CURB @ GUTTER FOR CURB SECTIONS, UNLESS NOTED OTHERWISE.

5. ALL ROOF DRAINS SHALL BE DIRECTED TOWARDS ON-SITE COLLECTION SYSTEM. NO ROOF DRAINS SHALL BE DIRECTED OFF-SITE WITHOUT ENTERING THE ON-SITE COLLECTION FIRST.

6. ALL SIDEWALK CROSS SLOPES HAVE BEEN GRADED TO MEET ADA REGULATIONS. CONTRACTOR SHALL CONFIRM GRADES BEFORE PLACING PAVEMENT OR SIDEWALKS AND REPORT ANY DISCREPANCIES TO OWNER AND/OR ENGINEER.

7. THE CONTRACTOR SHALL USE EITHER RCP (CL. III) OR HDPE PIPE FOR THE STORM DRAINAGE SYSTEM. IF THE CONTRACTOR CHOOSES TO USE HDPE PIPE, IT SHALL BE ADS N-12 HP STORM PIPE OR APPROVED EQUAL AND SHALL BE INSTALLED TO MANUFACTURER SPECIFICATIONS. IN ADDITION, THE CONTRACTOR SHALL BE SURE TO PROVIDE CONCRETE COLLARS AROUND EACH F.E.S. TO PREVENT FLOATATION IF HDPE PIPE IS CHOSEN.

8. CONTRACTOR SHALL REFER TO THE REPORT OF SUBSURFACE EXPLORATION AND GEOTECHNICAL ENGINEERING ANALYSIS OF THE WILMINGTON CARE CENTER ADDITION PREPARED BY ECS CAROLINAS, LLP, PROJECT NUMBER 22.18559, AND DATED FEBRUARY 8, 2013 FOR SITE CONSTRUCTION RECOMMENDATIONS.

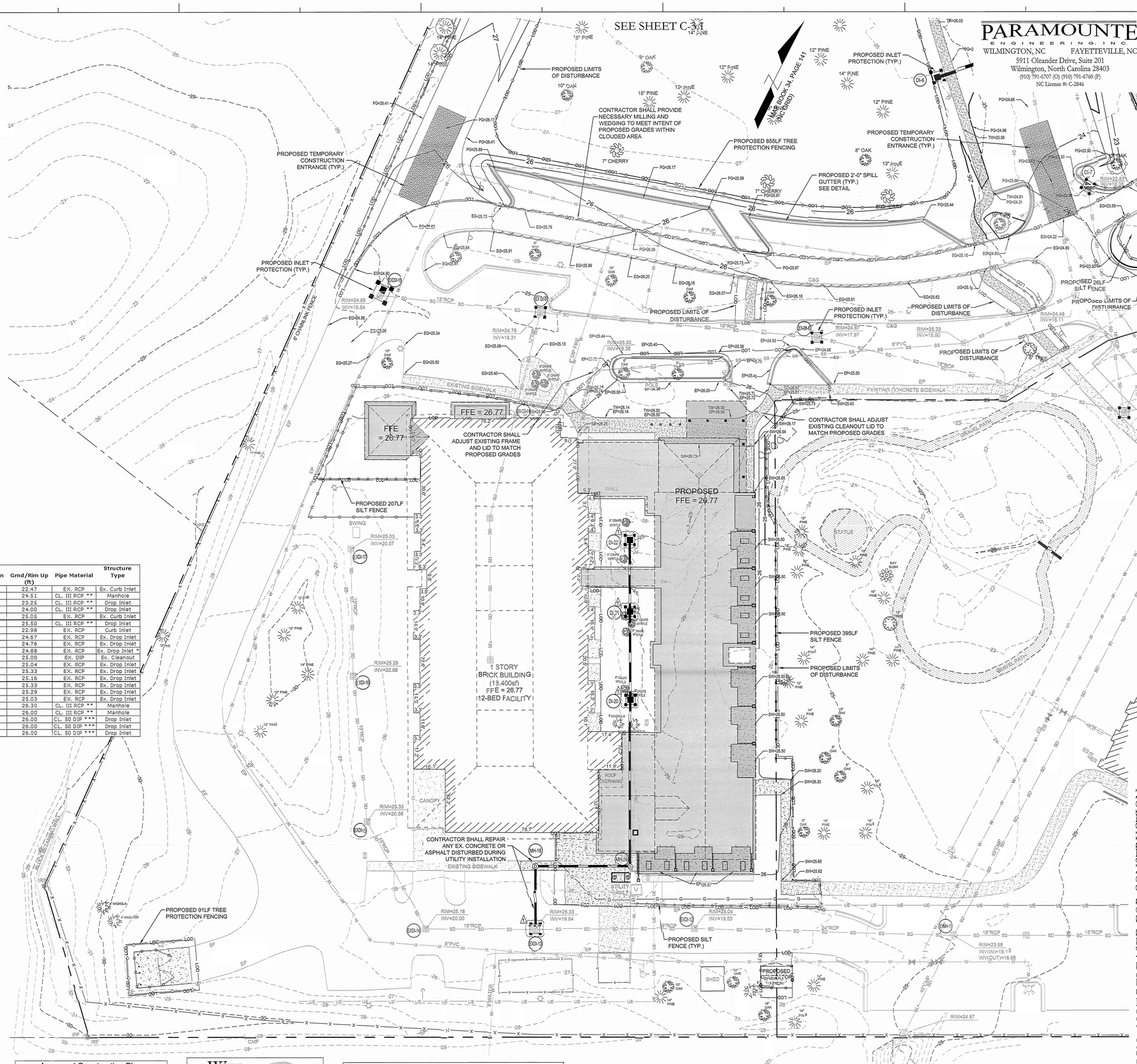

Approved Construction Plan

	Name	Date
Planning		
Traffic		
Fire		

CITY OF WILMINGTON NORTH CAROLINA
Public Services • Engineering Division
APPROVED STORMWATER MANAGEMENT PLAN
Date:_____ Permit #_____
Signed: _____

NCDENR PWSS WATER PERMIT #: _____
WATER CAPACITY: _____GPD
DWQ SEWER PERMIT #: _____
SEWER CAPACITY: _____GPD
SEWER SHED # AND PLANT: _____
SEWER TO FLOW THROUGH NEI: YES or NO (CIRCLE ONE)

For each open utility cut of City streets, a $325 permit shall be required from the City prior to occupancy and/or project acceptance.

FINAL DESIGN - NOT RELEASED FOR CONSTRUCTION

PARAMOUNTE ENGINEERING, INC
WILMINGTON, NC FAYETTEVILLE, NC
5911 Oleander Drive, Suite 201
Wilmington, North Carolina 28403
(910) 791-6707 (O) (910) 791-6760 (F)
NC License #: C-2846

Lower Cape Fear Hospice & LifeCareCenter

LOWER CAPE FEAR HOSPICE WILMINGTON CARE CENTER - SIX BED ADDITION
1406 PHYSICIANS DR.

LS3P ASSOCIATES LTD.
2528 INDEPENDENCE BLVD. SUITE 200
WILMINGTON, NORTH CAROLINA 28412
TEL. 910.790.9901 FAX 910.790.3111
WWW.LS3P.COM

NORTH CAROLINA PROFESSIONAL SEAL 031501 ENGINEER ROBERT P. BALLARD

MEMBERS OF THE AMERICAN INSTITUTE OF ARCHITECTS

COPYRIGHT 2012 ALL RIGHTS RESERVED
PRINTED OR ELECTRONIC DRAWINGS AND DOCUMENTATION MAY NOT BE REPRODUCED IN ANY FORM WITHOUT WRITTEN PERMISSION FROM LS3P ASSOCIATES LTD.

REVISIONS:

No.	Description	Date
1.	NHC Engineering Comments	2/21/13
2.	COW Planning Comments	3/5/13
3.	COW Planning Comments	4/29/13

PROJECT: 12217.PE
DATE: MAY 1, 2013
DRAWN BY: RPB
CHECKED BY: RPB

GRADING - DRAINAGE - EC PLAN

C-3.0

SOLUTIONS THROUGH LISTENING
SERVICE BY DESIGN

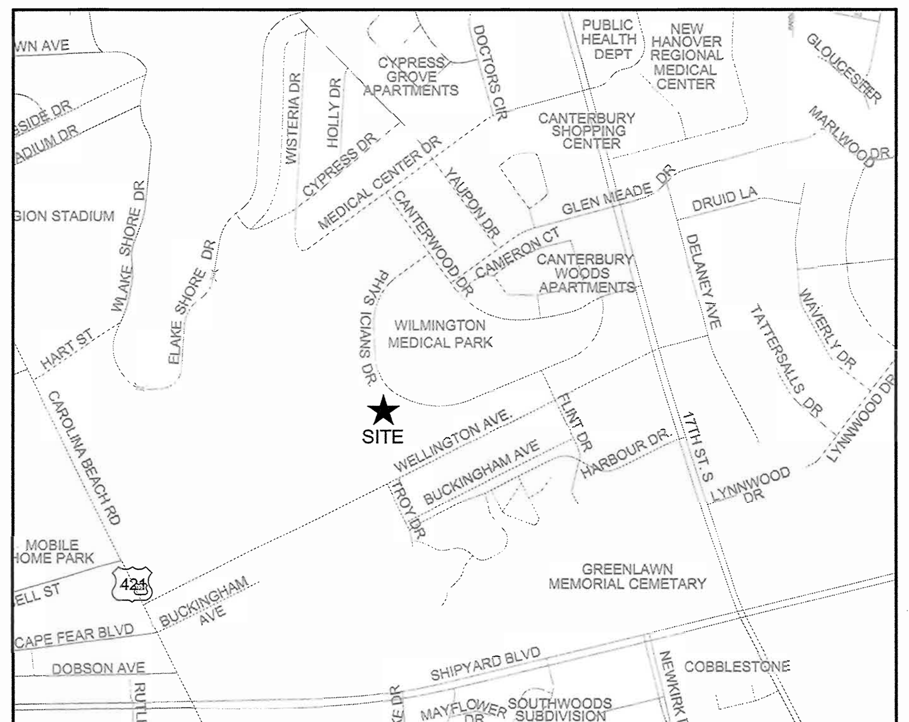

VICINITY MAP
1"=500'

Approved Construction Plan	Name	Date
Planning		
Traffic		
Fire		

CITY OF WILMINGTON NORTH CAROLINA
Public Services • Engineering Division
APPROVED STORMWATER MANAGEMENT PLAN
Date:________ Permit #________
Signed: ________

NCDENR PWSS WATER PERMIT #: ________
WATER CAPACITY: ________GPD
DWQ SEWER PERMIT #: ________
SEWER CAPACITY: ________GPD
SEWER SHED # AND PLANT: ________
SEWER TO FLOW THROUGH NEI: YES or NO (CIRCLE ONE)

For each open utility cut of City streets, a $325 permit shall be required from the City prior to occupancy and/or project acceptance.

LEGEND:

- 29 — EXISTING CONTOUR
- 29 — PROPOSED CONTOUR
- 28.00 (EG) — EXISTING SPOT ELEVATION
- 28.00 (PG) — PROPOSED EDGE OF PAVEMENT/FACE OF CURB ELEVATION
- 28.50 (SW) — PROPOSED SIDEWALK ELEVATION
- 28.50 (TC) — PROPOSED TOP OF CURB ELEVATION
- INLET PROTECTION
- LOD — LIMITS OF DISTURBANCE
- SILT FENCE
- DRAINAGE FLOW PATH
- CI-1 — DRAINAGE INLET LABEL

NOTATION:
CI = CURB INLET
DI = DROP INLET
CO = CLEANOUT
DDI = DOUBLE DROP INLET
MH = STORM DRAIN MANHOLE
FFE = FINISHED FLOOR ELEVATION
BPE = BUILDING PAD ELEVATION

SPILL GUTTER (REVERSE GUTTER, SEE DETAIL)

STORM SEWER TABLE

Line ID	Line Length (ft)	Pipe Size (in)	Pipe Slope (%)	Inv Elev Dn (ft)	Inv Elev Up (ft)	Grnd/Rim Dn (ft)	Grnd/Rim Up (ft)	Pipe Material	Structure Type
EX CI-1 TO OUT	27	18	7.23	17.33	19.27	23.19	22.47	EX. RCP	Ex. Curb Inlet
MH-2 TO EX CI-1	62	18	0.50	19.27	19.58	22.47	24.51	CL. III RCP **	Manhole
DI-3 TO MH-2	94	15	0.50	19.58	20.05	24.51	23.25	CL. III RCP **	Drop Inlet
DI-4 TO MH-2	57	18	0.51	19.58	19.87	24.51	24.00	CL. III RCP **	Drop Inlet
MH-5 TO OUT	64	24	0.50	16.98	17.30	22.81	25.05	EX. RCP	Ex. Curb Inlet
DI-6 TO MH-5	57	18	0.51	17.30	17.59	25.05	25.50	CL. III RCP **	Drop Inlet
CI-7 TO OUT	114	18	0.51	17.50	18.08	20.65	22.98	EX. RCP	Curb Inlet
EX DI-8 TO OUT	157	18	0.30	17.50	17.97	20.65	24.67	EX. RCP	Ex. Drop Inlet
EX DI-9 TO EX DI-8	138	18	0.25	17.97	18.31	24.67	24.76	EX. RCP	Ex. Drop Inlet
EX DI-10 TO EX DI-9	78	15	0.42	18.31	18.64	24.76	24.88	EX. RCP	Ex. Drop Inlet *
EX CO-11 TO EX DI-9	51	12	2.82	18.31	19.75	24.76	25.00	EX. DIP	Ex. Cleanout
EXDI-12 TO EXMH-11	132	24	0.30	19.13	19.53	23.98	25.04	EX. RCP	Ex. Drop Inlet
EXDI-13 TO EXDI-12	81	18	0.38	19.53	19.84	25.04	25.33	EX. RCP	Ex. Drop Inlet
EXDI-14 TO EXDI-13	56	18	0.29	19.84	20.00	25.33	25.16	EX. RCP	Ex. Drop Inlet
EXDI-15 TO EXDI-14	62	15	0.90	20.00	20.56	25.16	25.33	EX. RCP	Ex. Drop Inlet
EXDI-16 TO EXDI-15	75	15	0.16	20.56	20.68	25.33	25.29	EX. RCP	Ex. Drop Inlet
EXDI-17 TO EXDI-16	65	15	-0.17	20.68	20.57	25.29	25.03	EX. RCP	Ex. Drop Inlet
MH-18 TO EXDI-13	32	12	0.53	19.84	20.01	25.33	26.30	CL. III RCP **	Manhole
MH-19 TO MH-18	49	12	0.56	20.01	20.28	26.30	26.00	CL. III RCP **	Manhole
DI-20 TO MH-19	85	12	0.49	20.28	20.70	26.00	26.00	CL. 50 DIP ***	Drop Inlet
DI-21 TO DI-20	45	12	0.49	20.70	20.92	26.00	26.00	CL. 50 DIP ***	Drop Inlet
DI-22 TO DI-21	37	12	0.49	20.92	21.10	26.00	26.00	CL. 50 DIP ***	Drop Inlet

* CONTRACTOR SHALL INSTALL A NEW DROP INLET FRAME, GRATE AND BOX ADJACENT TO EXISTING DROP INLET TO ACHIEVE A DOUBLE DROP INLET.
** CONTRACTOR SHALL USE ADS N-12 HDPE OR CL.III RCP FOR STORM SEWER. IF FIELD CONDITIONS INDICATE LESS THAN TWO FEET OF COVER, CL.IV RCP SHALL BE USED.
*** CLASS 51 DUCTILE IRON PIPE MEETING THE REQUIREMENTS OF ASTM A-746 AND ANSI A21.51 WITH RUBBER GASKETED PUSH-ON JOINTS. DUCTILE IRON PIPE SHALL BE CEMENT LINED WITH AN ASPHALT SEALCOAT.

ASPHALT AREA NOTE:
1. SITE CONTRACTOR SHALL STRIP TOPSOIL AND ANY UNSUITALBE MATERIAL AND PROVIDE CUT/FILL OPERATIONS TO PROVIDE A COMPACTED CONTROLLED SUBGRADE, IN ACCORDANCE WITH THE SUBSURFACE GEOTECHNICAL EXPLORATION AND TECHNICAL SPECIFICATIONS.

BUILDING PAD NOTE:
1. SITE CONTRACTOR SHALL STRIP TOPSOIL AND ANY UNSUITALBE MATERIAL AND PROVIDE CUT/FILL OPERATIONS TO PROVIDE A COMPACTED CONTROLLED BUILDING PAD, IN ACCORDANCE WITH THE SUBSURFACE GEOTECHNICAL EXPLORATION AND TECHNICAL SPECIFICATIONS.

STORMWATER NOTE:
1. THIS PROJECT DRAINS TO AN OFF-SITE STORMWATER RETENTION SYSTEM (SILVER STREAM REGIONAL FACILITY - SW8 921002) OPERATED AND MAINTAINED BY THE CITY OF WILMINGTON.
2. THE BUILT UPON AREA ALLOTTED TO THIS DEVELOPMENT BY STORMWATER MANAGEMENT PERMIT NO. SW8 921002 MODIFICATION, IS O&I ZONING AT 75% MAXIMUM BUA.

GENERAL NOTES:
1. ALL CONSTRUCTION TO BE IN ACCORDANCE WITH ALL CITY OF WILMINGTON AND NEW HANOVER COUNTY STANDARDS AND SPECIFICATIONS.
2. THE CONTRACTOR SHALL PLACE INLET PROTECTION AROUND ALL STORM DRAIN INLETS TO PROTECT THE SYSTEM FROM COLLECTING SEDIMENTATION DURING CONSTRUCTION. INLET PROTECTION SHALL REMAIN IN PLACE UNTIL THE PARKING LOT IS PAVED.
3. CONTRACTOR SHALL ADJUST ALL FRAMES OF EX. UTILITY INFRASTRUCTURE WITHIN ASPHALT OVERLAY AREAS TO MATCH PROPOSED GRADES.
4. ALL PROPOSED SPOT ELEVATIONS SHOWN IN THE PARKING LOT ARE PROPOSED EDGE OF PAVEMENT OR FACE OF CURB @ GUTTER FOR CURB SECTIONS, UNLESS NOTED OTHERWISE.
5. ALL ROOF DRAINS SHALL BE DIRECTED TOWARDS ON-SITE COLLECTION SYSTEM. NO ROOF DRAINS SHALL BE DIRECTED OFF-SITE WITHOUT ENTERING THE ON-SITE COLLECTION FIRST.
6. ALL SIDEWALK CROSS SLOPES HAVE BEEN GRADED TO MEET ADA REGULATIONS. CONTRACTOR SHALL CONFIRM GRADES BEFORE PLACING PAVEMENT OR SIDEWALKS AND REPORT ANY DISCREPANCIES TO OWNER AND/OR ENGINEER.
7. THE CONTRACTOR SHALL USE EITHER RCP (CL. III) OR HDPE PIPE FOR THE STORM DRAINAGE SYSTEM. IF THE CONTRACTOR CHOOSES TO USE HDPE PIPE, IT SHALL BE ADS N-12 HP STORM PIPE OR APPROVED EQUAL AND SHALL BE INSTALLED TO MANUFACTURER SPECIFICATIONS. IN ADDITION, THE CONTRACTOR SHALL BE SURE TO PROVIDE CONCRETE COLLARS AROUND EACH F.E.S. TO PREVENT FLOATATION IF HDPE PIPE IS CHOSEN.
8. CONTRACTOR SHALL REFER TO THE REPORT OF SUBSURFACE EXPLORATION AND GEOTECHNICAL ENGINEERING ANALYSIS OF THE WILMINGTON CARE CENTER ADDITION PREPARED BY ECS CAROLINAS, LLP, PROJECT NUMBER 22.18559, AND DATED FEBRUARY 8, 2013 FOR SITE CONSTRUCTION RECOMMENDATIONS.

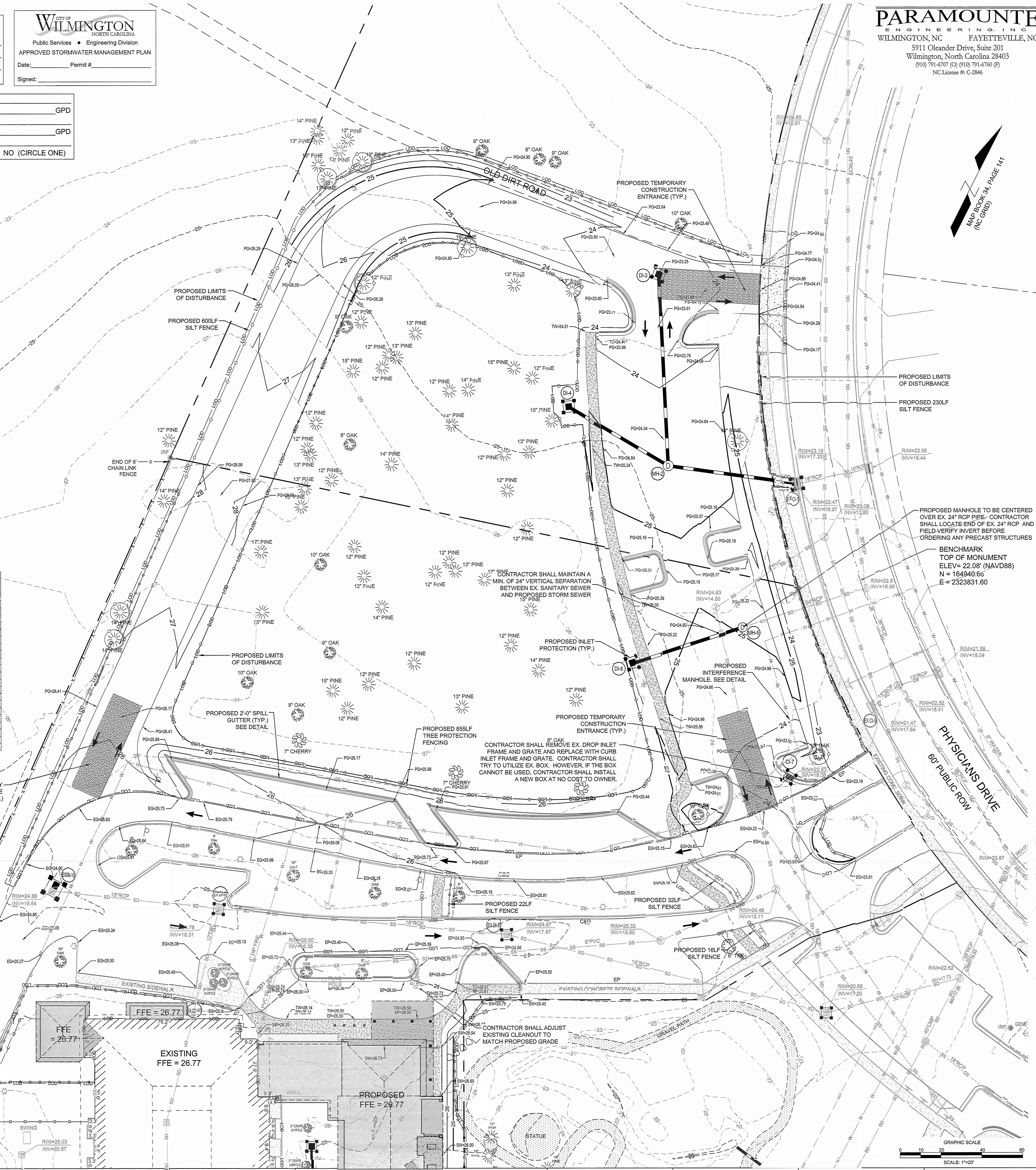

SEE SHEET C-3.0

FINAL DESIGN - NOT RELEASED FOR CONSTRUCTION

PARAMOUNTE ENGINEERING, INC.
WILMINGTON, NC FAYETTEVILLE, NC
5911 Oleander Drive, Suite 201
Wilmington, North Carolina 28403
(910) 791-6707 (O) (910) 791-6760 (F)
NC License #: C-2846

Lower Cape Fear Hospice & LifeCareCenter

LOWER CAPE FEAR HOSPICE WILMINGTON CARE CENTER - SIX BED ADDITION 1406 PHYSICIANS DR.

LS3P ASSOCIATES LTD.
2528 INDEPENDENCE BLVD. SUITE 200
WILMINGTON, NORTH CAROLINA 28412
TEL. 910.790.9901 FAX 910.790.3111
WWW.LS3P.COM

NORTH CAROLINA PROFESSIONAL ENGINEER SEAL 031591 ROBERT P. BALLAND 5/1/13

MEMBERS OF THE AMERICAN INSTITUTE OF ARCHITECTS

COPYRIGHT 2012 ALL RIGHTS RESERVED PRINTED OR ELECTRONIC DRAWINGS AND DOCUMENTATION MAY NOT BE REPRODUCED IN ANY FORM WITHOUT WRITTEN PERMISSION FROM LS3P ASSOCIATES LTD.

REVISIONS:

No.	Description	Date
1.	COW Planning Comments	3/5/13
2.	COW Planning Comments	4/29/13

PROJECT: 12217.PE
DATE: MAY 1, 2013
DRAWN BY: RPB
CHECKED BY: RPB

GRADING - DRAINAGE - EC PLAN

C-3.1

SOLUTIONS THROUGH LISTENING
SERVICE BY DESIGN

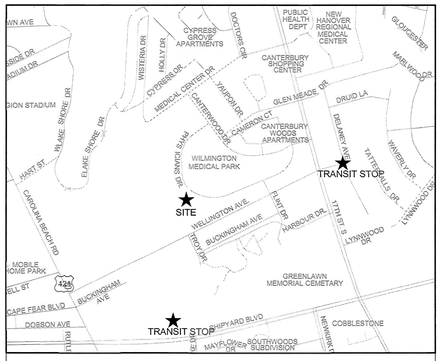

VICINITY MAP
1"=500'

		Lower Cape Fear Hospice Plant Schedule		
		Trees Shrubs & Groundcover		
Key	Qty	Common Name	Size & Specs.	
CH	40	CARISSA HOLLY	36 inch hgt. and spread	
EGA	48	EDWARD GOUCHER ABELIA	18 inch hgt. and spread	
GA	18	GUMPO AZALEA	15"-18" hgt. sp., equal spacing	
HRD	65	HAPPY RETURN DAYLILY	12"-18" hgt. sp., equal spacing	
HH	160	HELLERI HOLLY	12"-18" hgt. sp., equal spacing	
LE	4	LACEBARK ELM	2 inch caliper at bh	
MCM	4	MUSKOGEE CRAPE MYRTLE	8-10 ft hgt. - multi-stem	
NCM	4	NATCHEZ CRAPE MYRTLE	8-10 ft hgt. - multi-stem	
HRLO	5	HIGH RISE LIVE OAK	2 inch caliper at bh	
MYCE	12	SOUTHERN WAX MYRTLE	7 gal 4' ht. 6' O.C.	
		Sod		
	3680 sf	CENTIPEDE	SOD 3680 SQ. FT.(each pallette covers +/- 500 sf)	
		Mulch		
	see plan	PINE STRAW MULCH	3 inch min, 4 inch max	
	Prior to any clearing, grading, or construction activity, tree protective fencing will be installed around protected trees or groves of trees.			
	No construction workers, tools, materials, or vehicles are permitted within the tree protective fencing.			

Landscape Calculations - Lower Cape Fear Hospice Wilmington Care center		
Disturbed area		87,120 sf -2 acres
Requirement - 15 trees /acre		30 trees
Provided	40	new trees - 17 see plant list
		existing trees - 23 as per credit for preserved trees chart
Shading requirement		
New parking area and drive isle		32,089sf
Canopy coverage		32,089sf x .2 = 6,418sf required
Canopy coverage provided		8,326sf
		8- crape myrtles - 157 x 8 = 1,256sf
		3 - canopy trees - 707 x 3 = 2,121sf
		14 - canopy trees - 354 x 14 = 4,949sf

SITE DATA TABULATION

CURRENT ZONING: O&I-1 (OFFICE AND INSTITUTIONAL DISTRICT 1)
LOWER CAPE FEAR HOSPICE & LIFECARE CENTER
1406 PHYSICIANS DRIVE
NEW HANOVER COUNTY PARCEL #: 3126-34-7646 (4.67ac), 3126-35-5297 (4.1ac)
3126-34-9694 (2.58ac), 3126-34-6862 (1.42ac)
TAX PARCEL IDENTIFICATION #: R06014-005-007-000, R06015-001-017-000
R06014-005-010-000, R06014-005-011-000
RECORDED LOT #: 8R-3, M.B. 51, PG 351
CAMA LAND USE CLASSIFICATION: URBAN
MAXIMUM BUILDING HEIGHT: 45'

PROPOSED USE: MEDICAL FACILITY (12 EXISTING BEDS PLUS 6 PROPOSED BEDS, 18 TOTAL)

SETBACK STANDARDS

	PROVIDED	REQUIRED
MINIMUM FRONT SETBACK	256 FT.	20 FT.
MINIMUM SIDE SETBACK	49 FT. (WEST)	10 FT.
	10 FT. (EAST)	10 FT.
MINIMUM REAR SETBACK	84 FT.	25 FT.

SITE INFORMATION

MINIMUM LOT SIZE	556,155 SF (12.77 AC)	15,000 SF
PROPOSED IMPERVIOUS AREA		
TOTAL BUILDING (PROPOSED FOOTPRINT)	12,261 SF	
ROOF OVERHANG AREA (PROPOSED)	4,094 SF	
ON-SITE PARKING & DRIVEWAYS (PROPOSED)	32,089 SF	
ON-SITE SIDEWALKS (PROPOSED)	4,045 SF	
TOTAL PROPOSED IMP. AREA	52,489 SF	
EXISTING IMPERVIOUS AREA (LIFE CAR CENTER AND ADMINISTRATION BUILDING)		
BUILDING (EXISTING)	30,059 SF	
ON-SITE PARKING (EXISTING)	67,548 SF	
ON-SITE SIDEWALKS (EXISTING)	12,087 SF	
ON-SITE MISCELLANEOUS	1,140 SF	
TOTAL EXISTING IMP. AREA	110,834 SF	
ON-SITE EXIST. TO BE DEMOLISHED	7,431 SF	
	103,403 SF	
PROPOSED PERCENT IMPERVIOUS	155,892 / 556,155 = 28.0%	
DISTURBED AREA:	87,120 SF (2.0 AC)	

BUILDING INFORMATION

40% MAXIMUM LOT COVERAGE (BUILDING)	
NUMBER OF BUILDINGS	1
EX. BUILDING AREA (12-BED FACILITY + ADMIN.)	30,059 SF
PROPOSED BUILDING (6-BED ADDITION)	12,638 SF
PROPOSED EXPANSIONS (KITCHEN & TOILET)	708 SF
HEIGHT (AT HIGHEST POINT)	20'-0" (1-STORY)
LOT COVERAGE	7.8% (EXISTING + PROPOSED)
HANDICAP PARKING REQUIRED:	4 SPACES
HANDICAP PARKING PROVIDED:	4 SPACES

LANDSCAPING
15 TREES PER DISTURBED ACRE = 30 TREES TO BE RETAINED OR PLANTED IN AREA DISTURBED.

TOTAL AREA OF LANDSCAPE ISLANDS PROVIDED = 3,100 SF
(MINIMUM ISLAND PERMITTED = 216 SF)
SHADING REQUIRED = 20% OF NEW PARKING AREA (32,089 SF) = 6,418 SF REQUIRED [8,326 SF PROVIDED]
FOUNDATION PLANTING = 12% OF WALL AREA FOR ANY PORTION OF THE BUILDING ADJACENT TO PARKING
NORTH: 141 SF REQUIRED [148 SF PROVIDED]
SOUTH: 181 SF REQUIRED [182 SF PROVIDED]

STREETYARD BUFFER
MINIMUM STREET YARD: 4,050 SF (18 X LF OF STREET FRONTAGE = 18 X 225=4,050 SF) [4,475 SF PROVIDED]
(DEVELOPED PORTION ONLY)

BUFFERYARD SETBACK STANDARDS

	PROVIDED	REQUIRED
MINIMUM FRONT YARD:	0 FT	0 FT
MINIMUM SIDE YARD:	0 FT	0 FT
MINIMUM REAR YARD (ADJ. TO RESIDENTIAL):	20 FT	20 FT

ADDITIONAL LANDSCAPING NOTES
1. ALL PLANTED AND RETAINED LIVING MATERIAL, REQUIRED TO MEET THE CITY OF WILMINGTON LANDSCAPING REGULATIONS, SHALL BE PERPETUALLY PROTECTED AND MAINTAINED TO PROFESSIONALLY ACCEPTED STANDARDS BY JOINT AND SEVERAL RESPONSIBILITY OF THE OWNER, OCCUPANT, TENANT, AND RESPECTIVE AGENTS OF THE PROPERTY ON WHICH THE MATERIAL IS LOCATED.
2. THE IRRIGATION SYSTEM SHALL BE EQUIPPED WITH A RAIN AND FREEZE SENSOR.
3. NO TYPE OF OBSTRUCTION SHALL BE PERMITTED IN THE SPACE BETWEEN 30" AND 10' ABOVE THE GROUND WITHIN THE AREA OF THE TRIANGULAR SIGHT DISTANCE.

Planting Notes

1. Contractor is responsible for identifying existing underground and above ground utilities lines prior to installation.
2. Trees shall be located a minimum of 5 feet from sewer/water connections. Contractor shall be liable for damage to any and all public or private utilities.
3. All plant material shall meet the normal requirements as per the American' Association of Nurserymen.
4. All shrubs beds and/or planting areas excluding turf areas shall be mulched with 3 inch min. depth, 4 inch max. unless otherwise noted. See plant list for specifications.
5. No existing trees shall be removed without written authorization from the Landscape Architect or Owners Representative.
6. All and any substitutions of plant material shall be approved by Landscape Architect or Owners Representative. Failure in obtaining approval may result in liability to the contractor.
7. The Contractor is responsible for removing trash, debris and excess material from the job site once the project is complete.
8. The Contractor is responsible for replacing dead and/or unhealthy plant material within 12 months of acceptance from the Owners Representative.
9. Lawn and seed areas that will be sodded and/or seeded shall be prepared to assure that the sub grade has been raked and compacted to accept the sod/ seed. All sod/seed areas must be irrigated and all sod shall be placed with staggered joints and no gaps shall exist between joints.
10. Irrigation to new planting areas as denoted on the landscape plans shall be designed and installed by a qualified irrigation contractor licensed in the state of North Carolina.
11. Planting soil mix: Mix existing soil with the soil amendments and fertilizers in the quantities recommended by the soil testing laboratory, third party recognized by the State department of Agriculture or as otherwise approved by the Landscape Architect or Owners representative.
12. The Contractor is responsible for hand watering the installed plant material and sod/seed turf areas for a period of six months from the acceptance from the Owners representative if a irrigation system has not been installed for the site. During the first two months all material shall be hand watered once weekly -on Monday and Thursday. The remaining months all material shall be hand watered once per week.

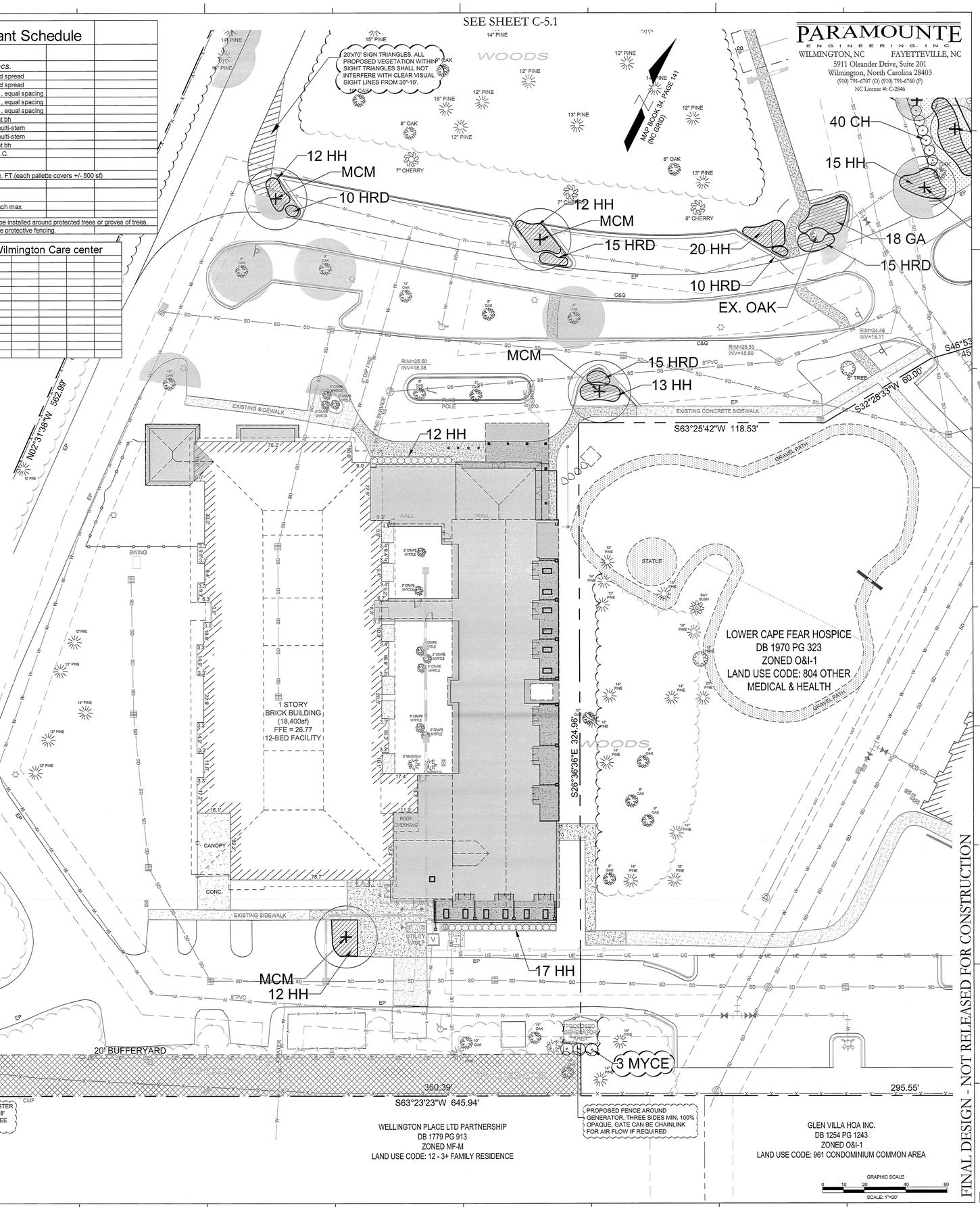

Approved Construction Plan

	Name	Date
Planning		
Traffic		
Fire		

CITY OF WILMINGTON NORTH CAROLINA
Public Services • Engineering Division
APPROVED STORMWATER MANAGEMENT PLAN
Date:_____ Permit #_____
Signed: _____

NCDENR PWSS WATER PERMIT #: _____
WATER CAPACITY: _____GPD
DWQ SEWER PERMIT #: _____
SEWER CAPACITY: _____GPD
SEWER SHED # AND PLANT: _____
SEWER TO FLOW THROUGH NEI: YES or NO (CIRCLE ONE)

For each open utility cut of City streets, a $325 permit shall be required from the City prior to occupancy and/or project acceptance.

Lower Cape Fear Hospice & LifeCareCenter

LOWER CAPE FEAR HOSPICE WILMINGTON CARE CENTER - SIX BED ADDITION
1406 PHYSICIANS DR.

LS3P ASSOCIATES LTD.
2528 INDEPENDENCE BLVD. SUITE 200
WILMINGTON, NORTH CAROLINA 28412
TEL. 910.790.9901 FAX 910.790.3111
WWW.LS3P.COM

NORTH CAROLINA 0826 REGISTERED LANDSCAPE ARCHITECT DAVID H. WEEKS
5/1/13

MEMBERS OF THE AMERICAN INSTITUTE OF ARCHITECTS

COPYRIGHT 2012 ALL RIGHTS RESERVED
PRINTED OR ELECTRONIC DRAWINGS AND DOCUMENTATION MAY NOT BE REPRODUCED IN ANY FORM WITHOUT WRITTEN PERMISSION FROM LS3P ASSOCIATES LTD.

REVISIONS:

No.	Description	Date
1.	COW Planning Comments	3/20/13
2.	COW Trans. Comments	4/29/13

PROJECT: 12217.PE
DATE: MAY 1, 2013
DRAWN BY: DHW
CHECKED BY: DHW

FINAL DESIGN - NOT RELEASED FOR CONSTRUCTION

LANDSCAPE PLAN

C-5.0

SOLUTIONS THROUGH LISTENING
SERVICE BY DESIGN

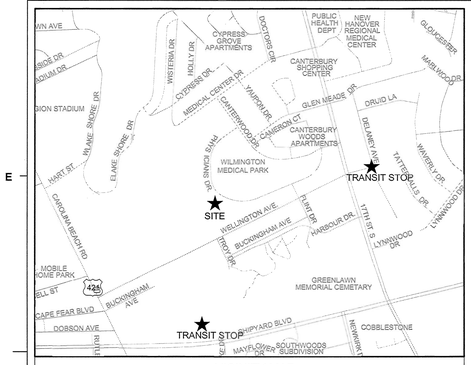

VICINITY MAP
1"=500'

		Lower Cape Fear Hospice Plant Schedule			
		Trees Shrubs & Groundcover			
Key	Qty	Common Name	Size & Specs.		
CH	40	CARISSA HOLLY	36 inch hgt. and spread		
EGA	48	EDWARD GOUCHER ABELIA	18 inch hgt. and spread		
GA	18	GUMPO AZALEA	15"-18" hgt, sp , equal spacing		
HRD	65	HAPPY RETURN DAYLILY	12"-18" hgt, sp , equal spacing		
HH	160	HELLERI HOLLY	12"-18" hgt, sp , equal spacing		
LE	4	LACEBARK ELM	2 inch caliper at bh		
MCM	4	MUSKOGEE CRAPE MYRTLE	8-10 ft hgt. - multi-stem		
NCM	4	NATCHEZ CRAPE MYRTLE	8-10 ft hgt. - multi-stem		
HRLO	5	HIGH RISE LIVE OAK	2 inch caliper at bh		
MYCE	12	SOUTHERN WAX MYRTLE	7 gal 4' ht. 6' O.C.		
		Sod			
	3680 sf	CENTIPEDE	SOD 3680 SQ. FT.(each pallette covers +/- 500 sf)		
		Mulch			
	see plan	PINE STRAW MULCH	3 inch min, 4 inch max		
	Prior to any clearing, grading, or construction activity, tree protective fencing will be installed around protected trees or groves of trees.				
	No construction workers, tools, materials, or vehicles are permitted within the tree protective fencing.				

Landscape Calculations - Lower Cape Fear Hospice Wilmington Care center		
Disturbed area		87,120 sf -2 acres
Requirement - 15 trees /acre		30 trees
Provided	40	new trees - 17 see plant list
		existing trees - 23 as per credit for preserved trees chart
Shading requirement		
New parking area and drive isle		32,089sf
Canopy coverage		32,089sf x .2 = 6,418sf required
Canopy coverage provided		8,326sf
		8- crape myrtles - 157 x 8 = 1,256sf
		3 - canopy trees - 707 x 3 = 2,121sf
		14 - canopy trees - 354 x 14 = 4,949sf

**SEE SHEET C-5.0 FOR PLANTING SPECIFICATIONS

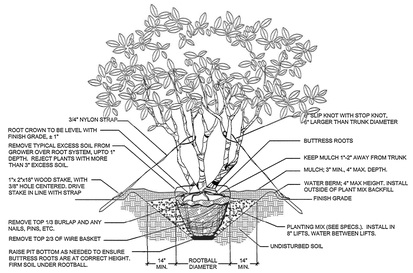

MULTI-STEM TREE INSTALLATION DETAIL
NTS

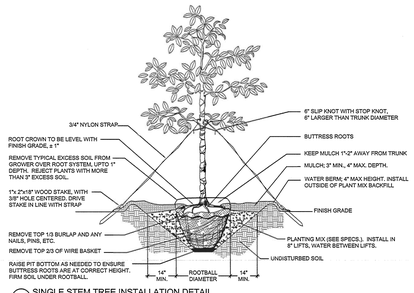

SINGLE STEM TREE INSTALLATION DETAIL
NTS

For each open utility cut of City streets, a $325 permit shall be required from the City prior to occupancy and/or project acceptance.

Approved Construction Plan

	Name	Date
Planning		
Traffic		
Fire		

CITY OF WILMINGTON NORTH CAROLINA
Public Services • Engineering Division
APPROVED STORMWATER MANAGEMENT PLAN
Date:_____ Permit #_____
Signed: _____

NCDENR PWSS WATER PERMIT #: _____
WATER CAPACITY: _____GPD
DWQ SEWER PERMIT #: _____
SEWER CAPACITY: _____GPD
SEWER SHED # AND PLANT: _____
SEWER TO FLOW THROUGH NEI: YES or NO (CIRCLE ONE)

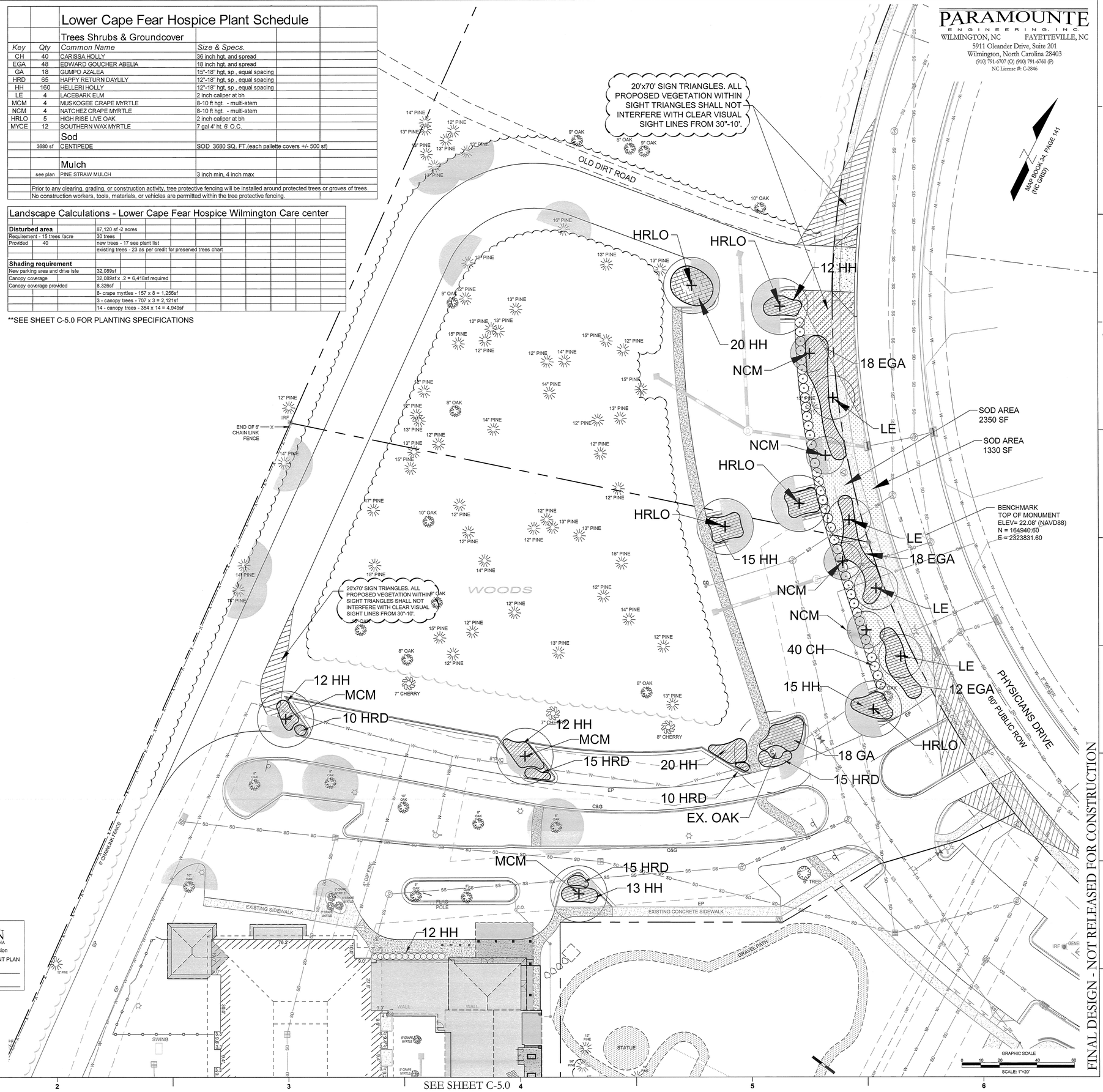

SEE SHEET C-5.0

FINAL DESIGN - NOT RELEASED FOR CONSTRUCTION

PARAMOUNTE ENGINEERING, INC.
WILMINGTON, NC FAYETTEVILLE, NC
5911 Oleander Drive, Suite 201
Wilmington, North Carolina 28403
(910) 791-6707 (O) (910) 791-6760 (F)
NC License #: C-2846

Lower Cape Fear Hospice & LifeCareCenter

LOWER CAPE FEAR HOSPICE WILMINGTON CARE CENTER - SIX BED ADDITION 1406 PHYSICIANS DR.

LS3P

LS3P ASSOCIATES LTD.
2528 INDEPENDENCE BLVD. SUITE 200
WILMINGTON, NORTH CAROLINA 28412
TEL. 910.790.9901 FAX 910.790.3111
WWW.LS3P.COM

NORTH CAROLINA REGISTERED LANDSCAPE ARCHITECT 0826 DAVID H. WHITE
5.1.13

MEMBERS OF THE AMERICAN INSTITUTE OF ARCHITECTS

COPYRIGHT 2012. ALL RIGHTS RESERVED PRINTED OR ELECTRONIC DRAWINGS AND DOCUMENTATION MAY NOT BE REPRODUCED IN ANY FORM WITHOUT WRITTEN PERMISSION FROM LS3P ASSOCIATES LTD.

REVISIONS:

No.	Description	Date
1.	COW Planning Comments	3/20/13
2.	COW Trans. Comments	4/29/13

PROJECT: 12217.PE
DATE: MAY 1, 2013
DRAWN BY: DHW
CHECKED BY: DHW

LANDSCAPE PLAN

C-5.1

SOLUTIONS THROUGH LISTENING
SERVICE BY DESIGN

PARAMOUNTE
ENGINEERING, INC
WILMINGTON, NC FAYETTEVILLE, NC
5911 Oleander Drive, Suite 201
Wilmington, North Carolina 28403
(910) 791-6707 (O) (910) 791-6760 (F)
NC License #: C-2846

Lower Cape Fear Hospice & LifeCareCenter

LOWER CAPE FEAR HOSPICE WILMINGTON CARE CENTER - SIX BED ADDITION 1406 PHYSICIANS DR.

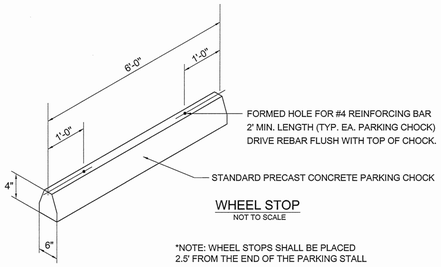

WHEEL STOP
NOT TO SCALE

*NOTE: WHEEL STOPS SHALL BE PLACED 2.5' FROM THE END OF THE PARKING STALL

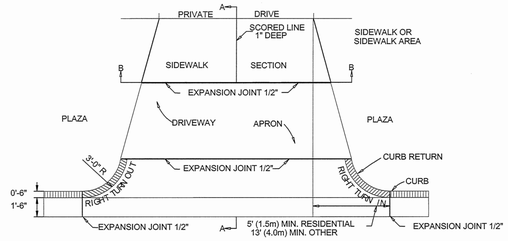

PAVEMENT PLAN

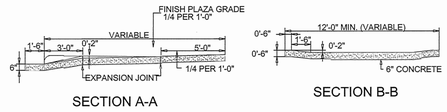

SECTION A-A SECTION B-B

STANDARD DRIVEWAY DETAIL
SD 8-02
NOT TO SCALE

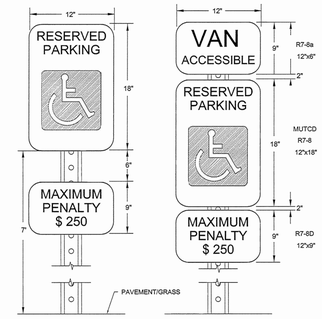

NOTES:

1. METAL POST AND ALL HARDWARE SHALL BE GALVANIZED STEEL, ASTM A307-90.
2. POST HOLES SHALL BE FILLED WITH GRANULAR BACKFILL IN 3-INCH TO 4-INCH LIFTS. THOROUGHLY HAND TAMP EACH LIFT AND CROWN BACKFILL AT TOP TO SHED WATER.
3. CONCRETE FOR FOOTING SHALL BE PORTLAND CEMENT AND HAVE A MINIMUM COMPRESSIVE STRENGTH OF 3000 PSI.
4. SIGNS SHALL BE CONSTRUCTED OF ALUMINUM, TYPE 6061-T6 AND IN CONFORMANCE WITH ASTM STD B-209. THICKNESS SHALL BE 0.80 INCHES.
5. TOP EDGE TREATMENT FILM SHALL BE 3" WIDE, CLEAR AND TRANSPARENT WITH A SUB-RESISTANT PRESSURE SENSITIVE NON-YELLOWING ADHESIVE, "SKOTCHCAL" TRANSPARENT FILE #639.
6. REFLECTIVE FACING MATERIAL SHALL BE SCOTCHLITE HIGH INTENSITY, MANUFACTURED BY 3M COMPANY.
7. SIGN LETTERING SHALL BE NPS MODIFIED CLARENDON TYPEFACE. UPPERCASE LETTERS SHALL BE 3.75" HEIGHT AND LOWERCASE LETTERS SHALL BE 2.5" HEIGHT WITH 3.75" SPACING BETWEEN LINES.
8. CORNER RADIUS OF SIGNS SHALL BE 2.5" ARROWS SHALL BE 5.625" LONG BY 3.75" HIGH.
9. MOUNT ON BUILDING OR METAL POST AS DIRECTED.

HANDICAP SIGN DETAIL
NOT TO SCALE

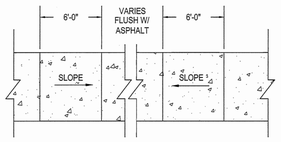

HANDICAP RAMP
NOT TO SCALE

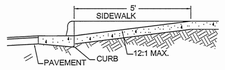

SECTION A-A

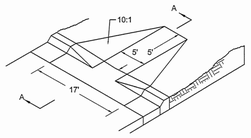

WHEELCHAIR RAMP (DROP CURB)
NOT TO SCALE

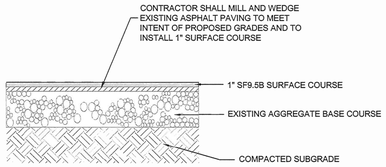

OVERLAY PAVEMENT SECTION
NOT TO SCALE

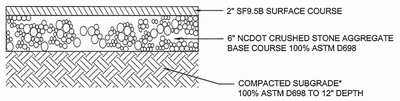

LIGHT DUTY PAVEMENT SECTION
NOT TO SCALE

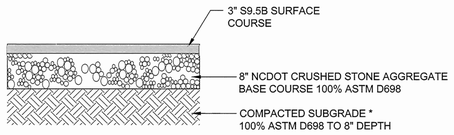

HEAVY-DUTY PAVEMENT SECTION
NOT TO SCALE

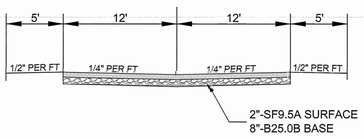

TYPICAL ROAD CROSS SECTION
NOT TO SCALE

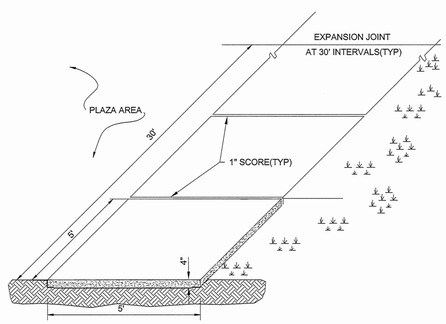

STANDARD SIDEWALK DETAIL
SD 8-15
NOT TO SCALE

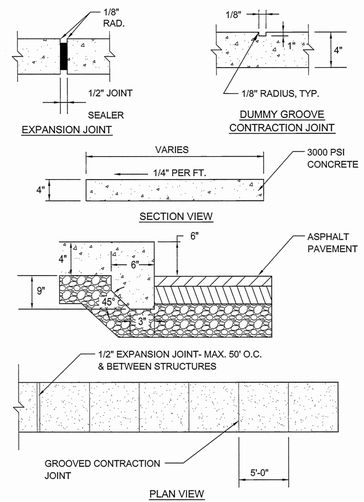

PLAN VIEW

CONCRETE WALK DETAIL
NOT TO SCALE

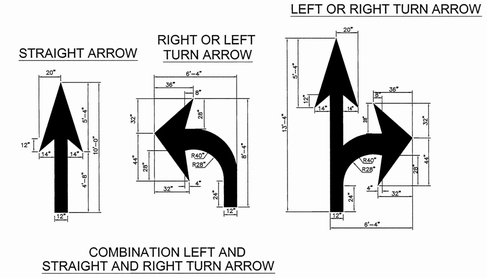

COMBINATION LEFT AND STRAIGHT AND RIGHT TURN ARROW

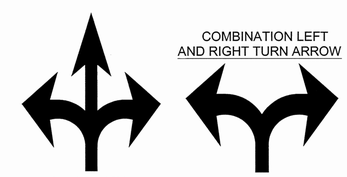

COMBINATION LEFT AND RIGHT TURN ARROW

GENERAL NOTES
-ALL PAVEMENT MARKING SYMBOLS SHALL BE WHITE IN COLOR
-PAVEMENT MARKING SYMBOLS SHALL NOT BE LOCATED AS TO ENCROACH INTO INTERSECTION AREAS.
-ON PORTLAND CEMENT CONCRETE PAVEMENTS, PAVEMENT MARKING SYMBOLS SHALL NOT BE PLACED ACROSS TRANSVERSE EXPANSION JOINTS UNLESS APPROVED BY THE ENGINEER.

PAVEMENT MARKINGS
ARROW SYMBOLS
NOT TO SCALE

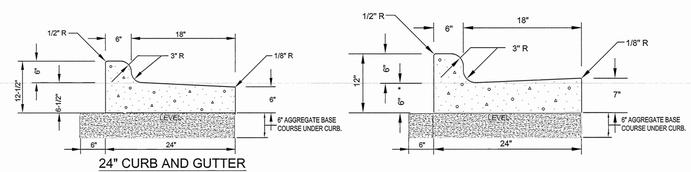

24" CURB AND GUTTER (REVERSE SLOPE)
NOT TO SCALE

24" CURB AND GUTTER
NOT TO SCALE

GENERAL NOTES:
CONTRACTION JOINTS SHALL BE SPACED AT MAX. 10' INTERVALS, EXCEPT THAT A 15 FOOT SPACING MAY BE USED WHEN A MACHINE IS USED OR WHEN SATISFACTORY SUPPORT FOR THE FACE FORM CAN BE OBTAINED WITHOUT THE USE OF TEMPLATES AT 10 FOOT INTERVALS. JOINT SPACING MAY BE ALTERED BY THE ENGINEER TO PREVENT UNCONTROLLED CRACKING. CONTRACTION JOINTS MAY BE INSTALLED BY THE USE OF TEMPLATES OR FORMED BY OTHER APPROVED METHODS. WHERE SUCH JOINTS ARE NOT FORMED BY TEMPLATES, A MINIMUM DEPTH OF 1-1/2" SHALL BE OBTAINED. ALL CONTRACTION JOINTS EXCEPT IN 8" X 6" MEDIAN CURB SHALL BE FILLED WITH JOINT SEALER. EXPANSION JOINTS SHALL BE SPACED AT 90' INTERVALS AND ADJACENT TO ALL RIGID OBJECTS.

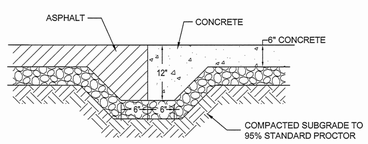

ASPHALT TO CONCRETE PAVEMENT TRANSITION
NOT TO SCALE

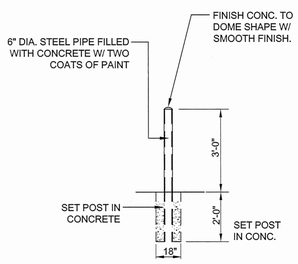

ELEVATION

PIPE BOLLARD DETAIL
NOT TO SCALE

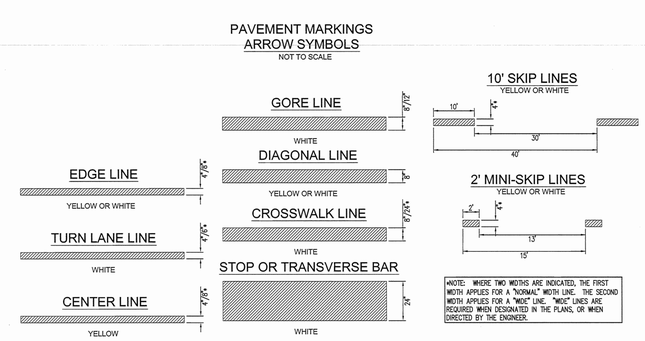

*NOTE: WHERE TWO WIDTHS ARE INDICATED, THE FIRST WIDTH APPLIES FOR A "NORMAL" WIDTH LINE. THE SECOND WIDTH APPLIES FOR A "WIDE" LINE. "WIDE" LINES ARE REQUIRED WHEN DESIGNATED IN THE PLANS, OR WHEN DIRECTED BY THE ENGINEER.

PAVEMENT MARKINGS
LINE TYPES
NOT TO SCALE

For each open utility cut of City streets, a $325 permit shall be required from the City prior to occupancy and/or project acceptance.

CITY OF WILMINGTON NORTH CAROLINA
Public Services • Engineering Division
APPROVED STORMWATER MANAGEMENT PLAN
Date:_____ Permit #_____
Signed: _____

Approved Construction Plan

	Name	Date
Planning		
Traffic		
Fire		

NCDENR PWSS WATER PERMIT #:	
WATER CAPACITY:	GPD
DWQ SEWER PERMIT #:	
SEWER CAPACITY:	GPD
SEWER SHED # AND PLANT:	
SEWER TO FLOW THROUGH NEI:	YES or NO (CIRCLE ONE)

LS3P ASSOCIATES LTD.
2528 INDEPENDENCE BLVD. SUITE 200
WILMINGTON, NORTH CAROLINA 28412
TEL. 910.790.9901 FAX 910.790.3111
WWW.LS3P.COM

NORTH CAROLINA PROFESSIONAL SEAL 031581 ENGINEER ROBERT P. SALLADE 5/1/13

MEMBERS OF THE AMERICAN INSTITUTE OF ARCHITECTS

COPYRIGHT 2012 ALL RIGHTS RESERVED
PRINTED OR ELECTRONIC DRAWINGS AND DOCUMENTATION MAY NOT BE REPRODUCED IN ANY FORM WITHOUT WRITTEN PERMISSION FROM LS3P ASSOCIATES LTD.

REVISIONS:

No.	Description	Date
1.	COW Planning Comments	4/29/13

PROJECT: 12217.PE
DATE: MAY 1, 2013
DRAWN BY: RPB
CHECKED BY: RPB

FINAL DESIGN - NOT RELEASED FOR CONSTRUCTION

DETAILS

C-6.0

SOLUTIONS THROUGH LISTENING
SERVICE BY DESIGN

PARAMOUNTE
ENGINEERING, INC.
WILMINGTON, NC FAYETTEVILLE, NC
5911 Oleander Drive, Suite 201
Wilmington, North Carolina 28403
(910) 791-6707 (O) (910) 791-6760 (F)
NC License #: C-2846

Lower Cape Fear Hospice & LifeCare Center

LOWER CAPE FEAR HOSPICE WILMINGTON CARE CENTER - SIX BED ADDITION 1406 PHYSICIANS DR.

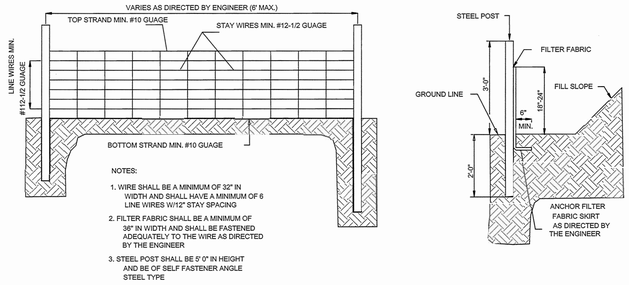

GUIDELINES FOR TEMPORARY SILT FENCE DETAIL

NOT TO SCALE

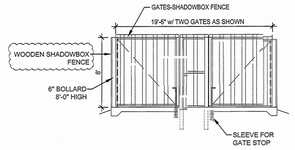

SECTION 'A'

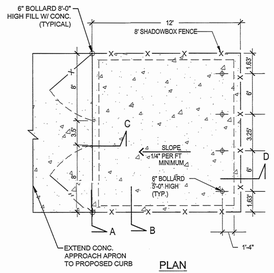

PLAN

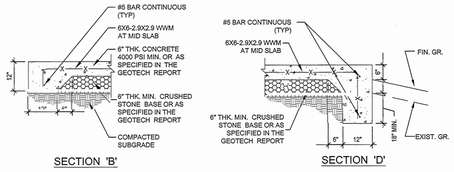

SECTION 'B' SECTION 'D'

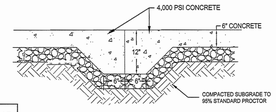

SECTION 'C'
(SEE SECTION 'B' FOR SIMILAR NOTES)

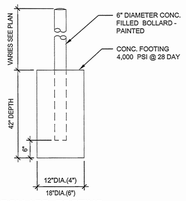

BOLLARD FOOTING

NOTE !! - CONTRACTOR SHALL PROVIDE PHOTOGRAPHIC OR SIMILAR ACCEPTABLE EVIDENCE TO THE OWNER'S CONSTRUCTION MANAGER UPON COMPLETION OF STEEL PLACEMENT.

NOTES:
1. FOOTINGS SHALL EXTEND 18" MINIMUM BELOW ADJACENT EXISTING GRADE BELOW FROST DEPTHS PER LOCAL CODES. SEE SOILS REPORT FOR ANY ADDITIONAL DESIGN CRITERIA.
2. ENCLOSURE SHALL BE SHADOWBOX FENCE

DUMPSTER PAD DETAIL

NOT TO SCALE

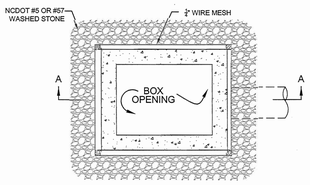

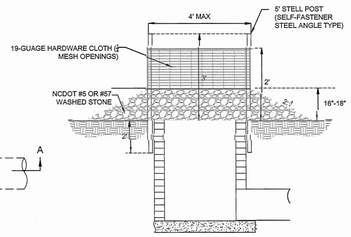

SECTION A - A

NOTE:
FOR CURB INLETS AND DROP INLETS

INLET PROTECTION

NOT TO SCALE

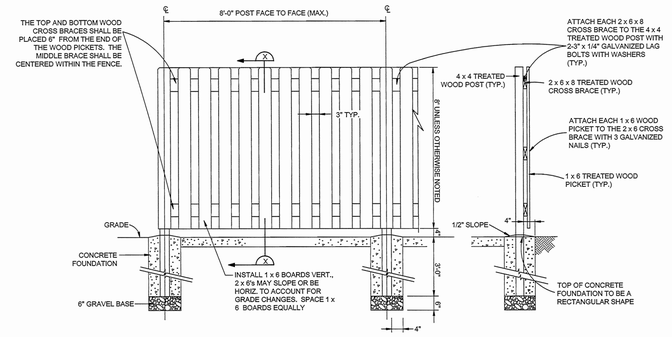

ELEVATION

WOOD FENCE SECTION (X)

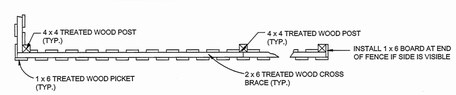

PLAN VIEW

SHADOW BOX FENCE DETAIL

NOT TO SCALE

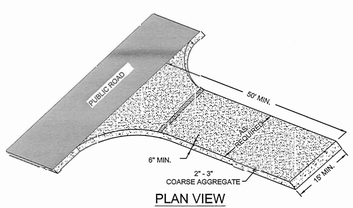

PLAN VIEW

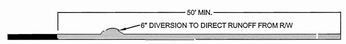

SECTION VIEW

TEMPORARY CONSTRUCTION ENTRANCE

NOT TO SCALE

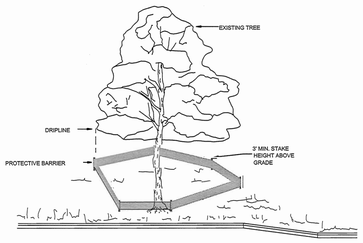

NOTE:
TREES TO BE SAVED WILL BE CLEARLY MARKED PRIOR TO CONSTRUCTION AND A PROTECTIVE BARRIER IS TO BE INSTALLED AT THE DRIPLINE.
DRIP LINE - THE AREA OF SOIL DIRECTLY BENEATH THE TREE EXTENDING OUT TO THE TIPS OF THE OUTERMOST BRANCHES.

METHOD OF TREE PROTECTION DURING CONSTRUCTION

NOT TO SCALE

NOTES AND SPECIFICATIONS

1. FENCING
SPECIFICATIONS FOR WOOD FENCES THE FOLLOWING SPECIFICATIONS, DERIVED FROM ASTM F 537 AND STANDARD PRACTICE IN THE FENCE INDUSTRY, SHALL APPLY TO THE MATERIALS AND CONSTRUCTION OF WOOD FENCES:
(A) POSTS AND FRAMING - POST SPACING SHALL NOT EXCEED EIGHT FEET (8')
ALL POST HOLES SHOULD BE A MINIMUM OF THIRTY INCHES (30") DEEP FOR FOUR FEET (4') HIGH FENCES AND THIRTY-SIX INCHES (36") DEEP FOR FENCES HIGHER THAN FOUR FEET (4') UP TO SIX FEET (6'). ALL TERMINAL, CORNER AND GATE POSTS SHOULD BE SET TO THIRTY-SIX INCHES (36") DEEP.
(B) POST HOLES SHOULD BE AT LEAST FOUR INCHES (4") LARGER IN DIAMETER THAN THE LARGEST DIMENSION OF THE POST. ALL TERMINAL, CORNER AND GATE POSTS SHOULD BE SET IN CONCRETE.
(C) FENCES UP TO FIVE FEET (5') SHALL HAVE A MINIMUM OF TWO RAILS (STRINGERS) TOP AND BOTTOM. FENCES OVER FIVE FEET (5') SHALL HAVE A THIRD RAIL AT CENTER HEIGHT. STRINGERS SHALL BE 2X6 MINIMUM (NOMINAL).
(D) MATERIALS - ALL MATERIALS USED IN WOOD FENCING SHOULD BE EITHER (1) NATURALLY ROT-RESISTANT WOOD (SUCH AS CEDAR), (2) A WOOD PRESSURE TREATED FOR ROT-RESISTANCE, OR (3) BE COATED THOROUGHLY WITH A PAINT OR PROTECTIVE COATING IMMEDIATELY ON ERECTION.
(E) FASTENERS - FASTENERS SHALL BE MADE OF A NON-RUSTING, NON-CORROSIVE MATERIAL, OR COATED TO RESIST RUSTING. NAILS SHALL BE LONG ENOUGH TO PENETRATE THE RECEIVING MEMBER TWICE THE THICKNESS OF OF THE THINNER MEMBER BUT NOT LESS THAN ONE AND ONE-HALF INCHES (1 1/2").
(F) COVER BOARDS SHALL BE 1/2" MINIMUM THICKNESS.
(G) SOLID WOOD FENCES SHOULD ALLOW FOR EXPANSION TO AVOID BUCKLING AS FOLLOWS: FOR WIDTHS 2 TO 4 INCHES, A ONE SIXTEENTH INCH (1/16") SPACE SHOULD BE PROVIDED; FOR WIDTHS 6 TO 8 INCHES, A MINIMUM SPACE OF ONE EIGHTH INCH (1/8") SHOULD BE PROVIDED.
(H) THE TOPS OF THE COVER BOARDS SHALL BE CUT AS DOG EAR (CORNERS CUT OFF AT 45 DEGREE ANGLES).

For each open utility cut of City streets, a $325 permit shall be required from the City prior to occupancy and/or project acceptance.

CITY OF WILMINGTON NORTH CAROLINA
Public Services • Engineering Division
APPROVED STORMWATER MANAGEMENT PLAN
Date:_____ Permit #_____
Signed: _____

Approved Construction Plan

	Name	Date
Planning		
Traffic		
Fire		

NCDENR PWSS WATER PERMIT #: _____
WATER CAPACITY: _____GPD
DWQ SEWER PERMIT #: _____
SEWER CAPACITY: _____GPD
SEWER SHED # AND PLANT: _____
SEWER TO FLOW THROUGH NEI: YES or NO (CIRCLE ONE)

FINAL DESIGN - NOT RELEASED FOR CONSTRUCTION

LS3P ASSOCIATES LTD.
2528 INDEPENDENCE BLVD. SUITE 200
WILMINGTON, NORTH CAROLINA 28412
TEL. 910.790.9901 FAX 910.790.3111
WWW.LS3P.COM

NORTH CAROLINA PROFESSIONAL SEAL 031591 5/1/13 ENGINEER ROBERT P. SALLADE

MEMBERS OF THE AMERICAN INSTITUTE OF ARCHITECTS

COPYRIGHT 2012 ALL RIGHTS RESERVED
PRINTED OR ELECTRONIC DRAWINGS AND DOCUMENTATION MAY NOT BE REPRODUCED IN ANY FORM WITHOUT WRITTEN PERMISSION FROM LS3P ASSOCIATES LTD.

REVISIONS:

No.	Description	Date
1.	COW Planning Comments	3/5/13
2.	COW Planning Comments	4/29/13

PROJECT: 12217.PE
DATE: MAY 1, 2013
DRAWN BY: RPB
CHECKED BY: RPB

DETAILS

C-6.1

SOLUTIONS THROUGH LISTENING
SERVICE BY DESIGN

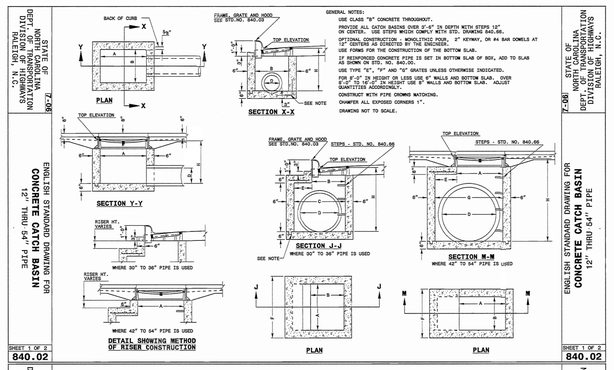

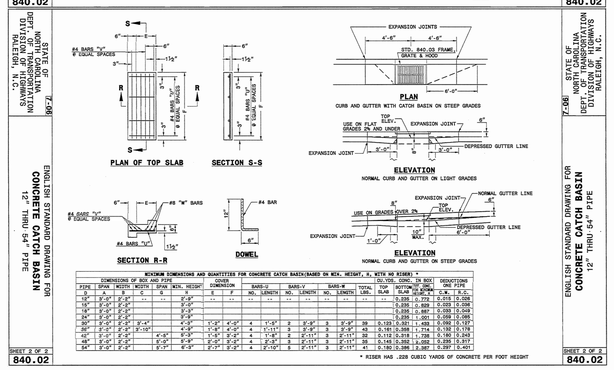

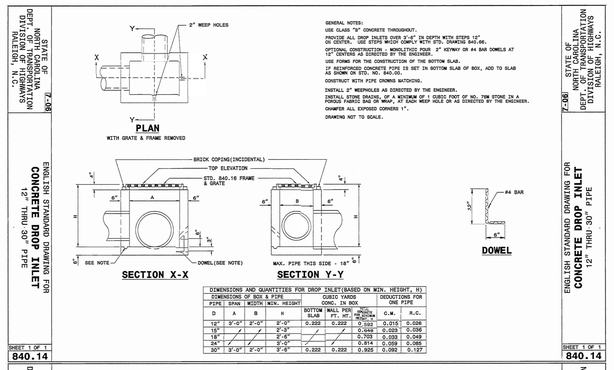

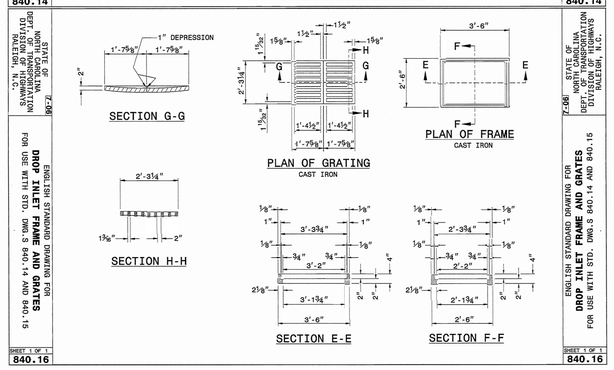

PARAMOUNTE
ENGINEERING, INC.
WILMINGTON, NC FAYETTEVILLE, NC
5911 Oleander Drive, Suite 201
Wilmington, North Carolina 28403
(910) 791-6707 (O) (910) 791-6760 (F)
NC License #: C-2846

Lower Cape Fear Hospice & LifeCareCenter

LOWER CAPE FEAR HOSPICE WILMINGTON CARE CENTER - SIX BED ADDITION 1406 PHYSICIANS DR.

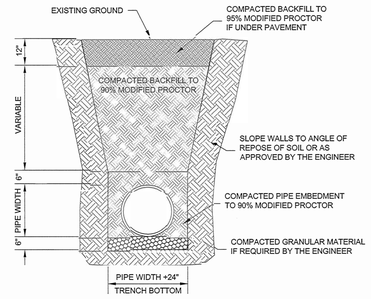

STANDARD PIPE TRENCH DETAIL
SD 1-07
NOT TO SCALE

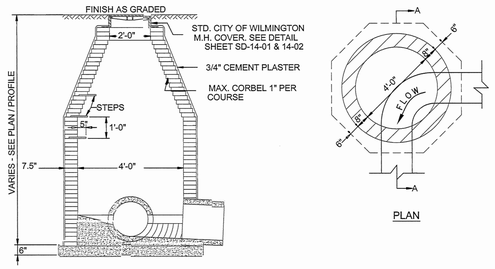

GUIDELINES FOR STORM DRAIN MANHOLE
SD 2 -03
NOT TO SCALE

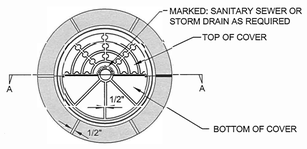

RING & COVER CONTACT SURFACES SHALL BE MACHINED TO INSURE EVEN BEARING OF COVER AND RING

MINIMUM WEIGHTS:
RING 190 LBS.
COVER 120 LBS.

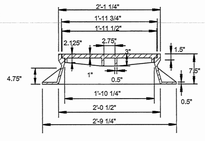

STANDARD MANHOLE RING AND COVER
SD 14-01
NOT TO SCALE

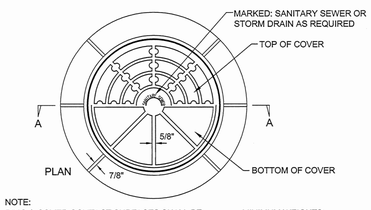

NOTE:
RING & COVER CONTACT SURFACES SHALL BE MACHINED TO INSURE EVEN BEARING OF COVER AND RING

MINIMUM WEIGHTS:
RING 261 LBS.
COVER 120 LBS.

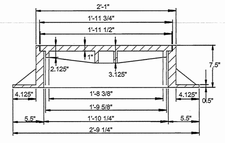

STANDARD MANHOLE RING & COVER
SD 14-02
NOT TO SCALE

For each open utility cut of City streets, a $325 permit shall be required from the City prior to occupancy and/or project acceptance.

CITY OF WILMINGTON NORTH CAROLINA
Public Services • Engineering Division
APPROVED STORMWATER MANAGEMENT PLAN
Date:_____ Permit #_____
Signed: _____

Approved Construction Plan
Name Date
Planning _____
Traffic _____
Fire _____

NCDENR PWSS WATER PERMIT #: _____
WATER CAPACITY: _____GPD
DWQ SEWER PERMIT #: _____
SEWER CAPACITY: _____GPD
SEWER SHED # AND PLANT: _____
SEWER TO FLOW THROUGH NEI: YES or NO (CIRCLE ONE)

FINAL DESIGN - NOT RELEASED FOR CONSTRUCTION

LS3P

LS3P ASSOCIATES LTD.
2528 INDEPENDENCE BLVD. SUITE 200
WILMINGTON, NORTH CAROLINA 28412
TEL. 910.790.9901 FAX 910.790.3111
WWW.LS3P.COM

NORTH CAROLINA PROFESSIONAL SEAL 031591 ENGINEER RICHARD P. BALLARD 5/1/13

MEMBERS OF THE AMERICAN INSTITUTE OF ARCHITECTS

COPYRIGHT 2012 ALL RIGHTS RESERVED
PRINTED OR ELECTRONIC DRAWINGS AND DOCUMENTATION MAY NOT BE REPRODUCED IN ANY FORM WITHOUT WRITTEN PERMISSION FROM LS3P ASSOCIATES LTD.

REVISIONS:

No.	Description	Date
1.	COW Planning Comments	4/29/13

PROJECT: 12217.PE
DATE: MAY 1, 2013
DRAWN BY: RPB
CHECKED BY: RPB

DETAILS

C-6.2

SOLUTIONS THROUGH LISTENING
SERVICE BY DESIGN

PARAMOUNTE
ENGINEERING, INC.
WILMINGTON, NC FAYETTEVILLE, NC
5911 Oleander Drive, Suite 201
Wilmington, North Carolina 28403
(910) 791-6707 (O) (910) 791-6760 (F)
NC License #: C-2846

Lower Cape Fear Hospice & LifeCareCenter

LOWER CAPE FEAR HOSPICE WILMINGTON CARE CENTER - SIX BED ADDITION 1406 PHYSICIANS DR.

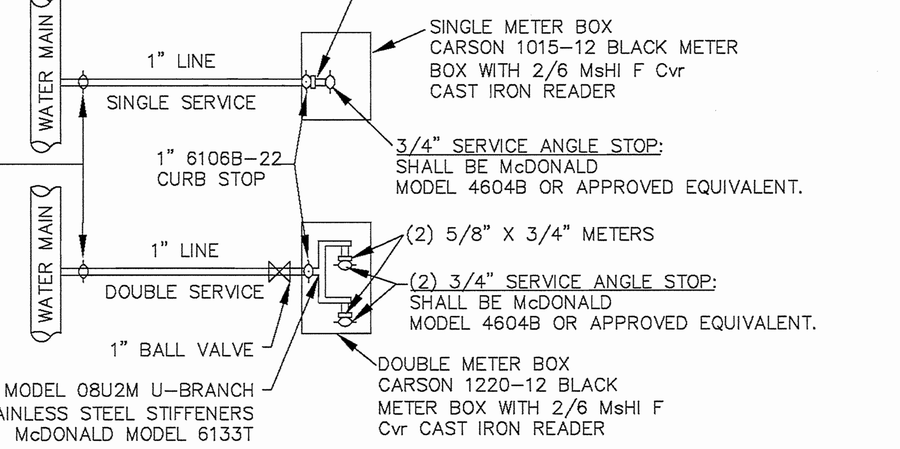

OPTIONAL CONNECTION

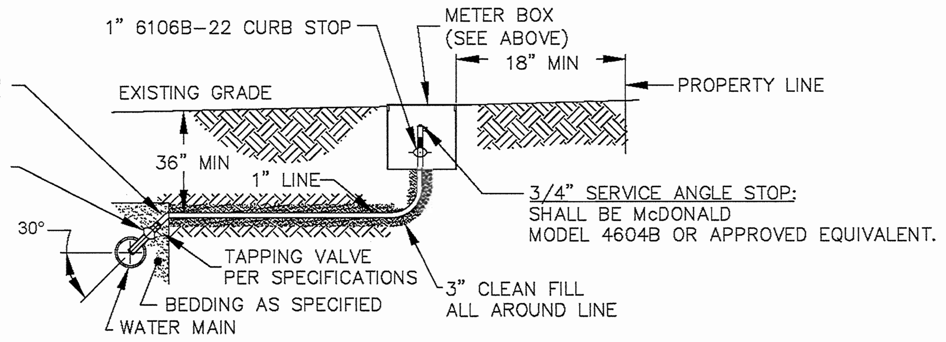

NOTES:
1. NO JOINT SHALL BE INSTALLED BETWEEN THE MAIN SERVICE TAP AND THE METER STOP. ALL SERVICES SHALL BE INSTALLED PERPENDICULAR TO MAIN.
2. SERVICE SADDLES ON PVC MAINS SHALL BE WIDE BAND BRASS BODY: SADDLE McDONALD 3801 OR EQUIVALENT
3. METER BOXES SUSCEPTIBLE TO TRAFFIC SHALL CONFORM TO ASTM A48, CLASS 30B AND AASHTO H20 LOAD RATING STANDARDS (SIP MODEL 4240 OR APPROVED EQUIVALENT)

SINGLE SERVICE SECTION VIEW

TYPICAL WATER SERVICE CONNECTION FOR RESIDENTIAL SINGLE FAMILY HOME ON CFPUA WATER SYSTEM

NOT TO SCALE

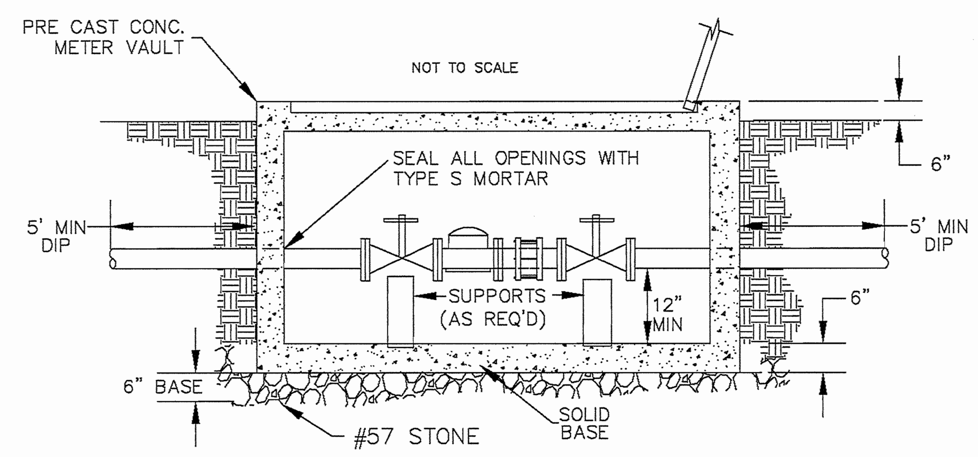

METER VAULT SECTION A-A

NOT TO SCALE

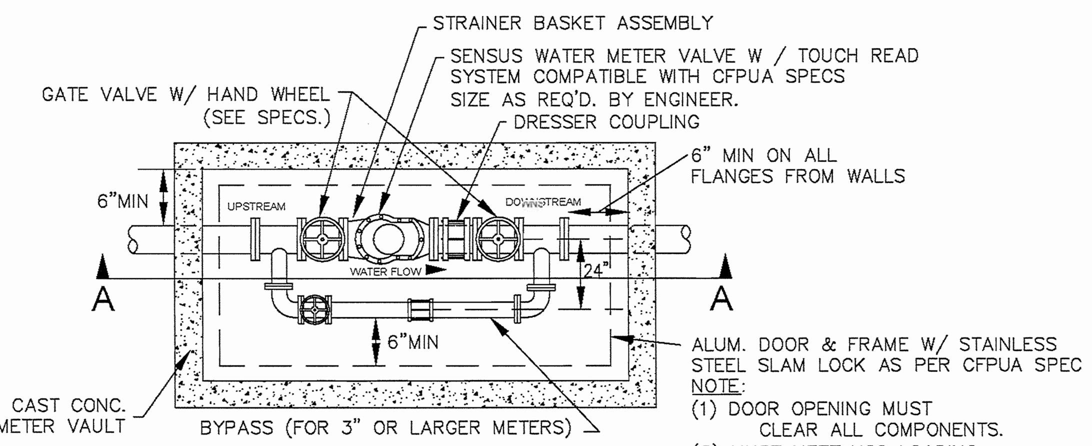

WATER METER VAULT

FOR WATER METERS LARGER THAN 2"

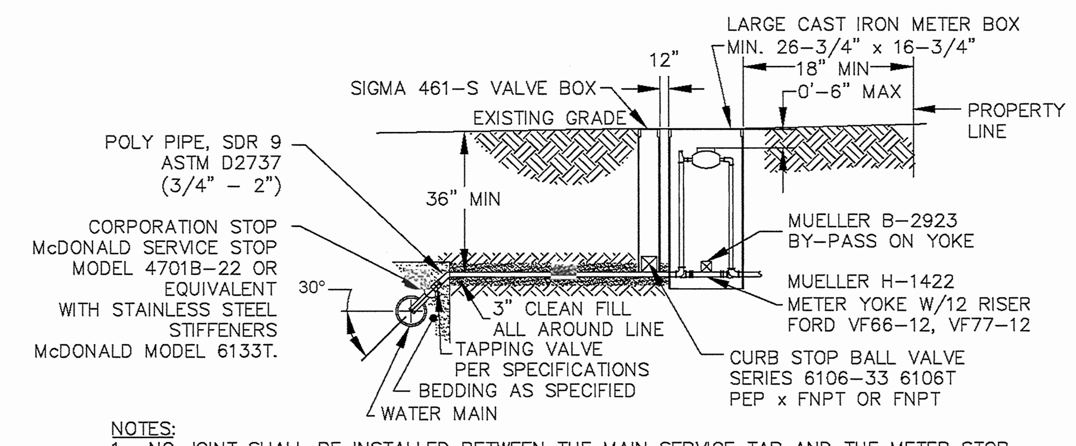

NOTES:
1. NO JOINT SHALL BE INSTALLED BETWEEN THE MAIN SERVICE TAP AND THE METER STOP. ALL SERVICES SHALL BE INSTALLED PERPENDICULAR TO MAIN.
2. SERVICE SADDLES ON PVC MAINS SHALL BE WIDE BAND BRASS BODY: SADDLE McDONALD 3801 OR EQUIVALENT
3. METER BOXES SUSCEPTIBLE TO TRAFFIC SHALL CONFORM TO ASTM A48, CLASS 30B AND AASHTO H20 LOAD RATING STANDARDS (SIP MODEL 4240 OR APPROVED EQUIVALENT)

LARGE METER BOX

FOR 1 1/2" OR 2" WATER SERVICES

NOT TO SCALE

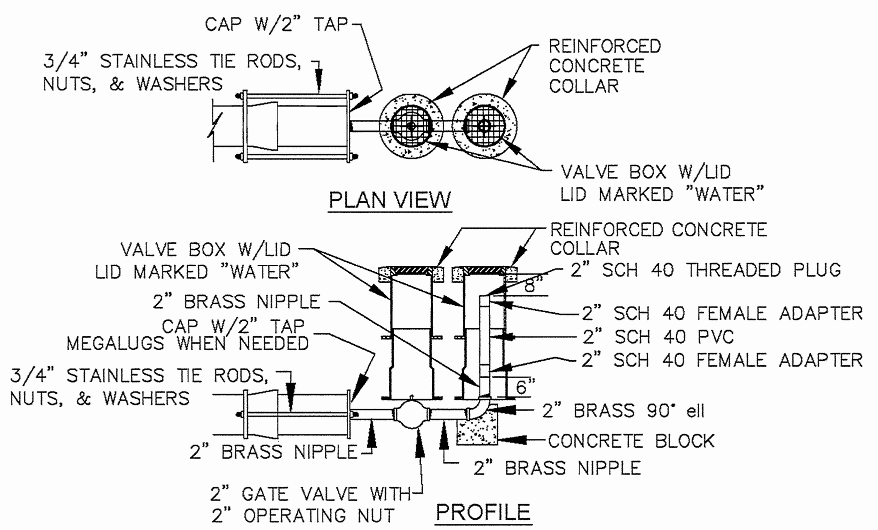

2" BLOW-OFF

NOT TO SCALE

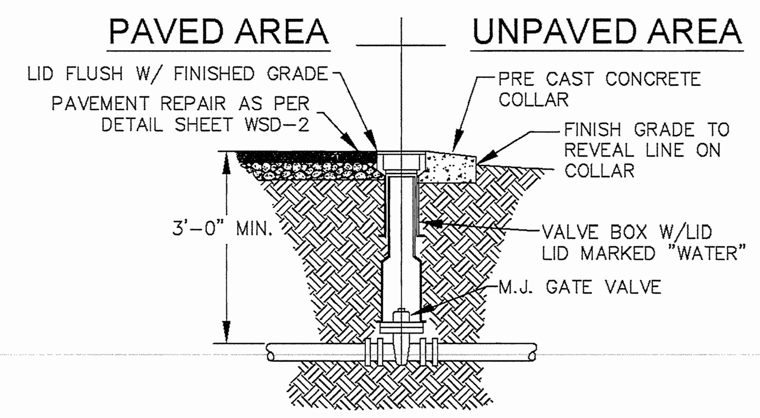

VALVE DETAIL

NOT TO SCALE

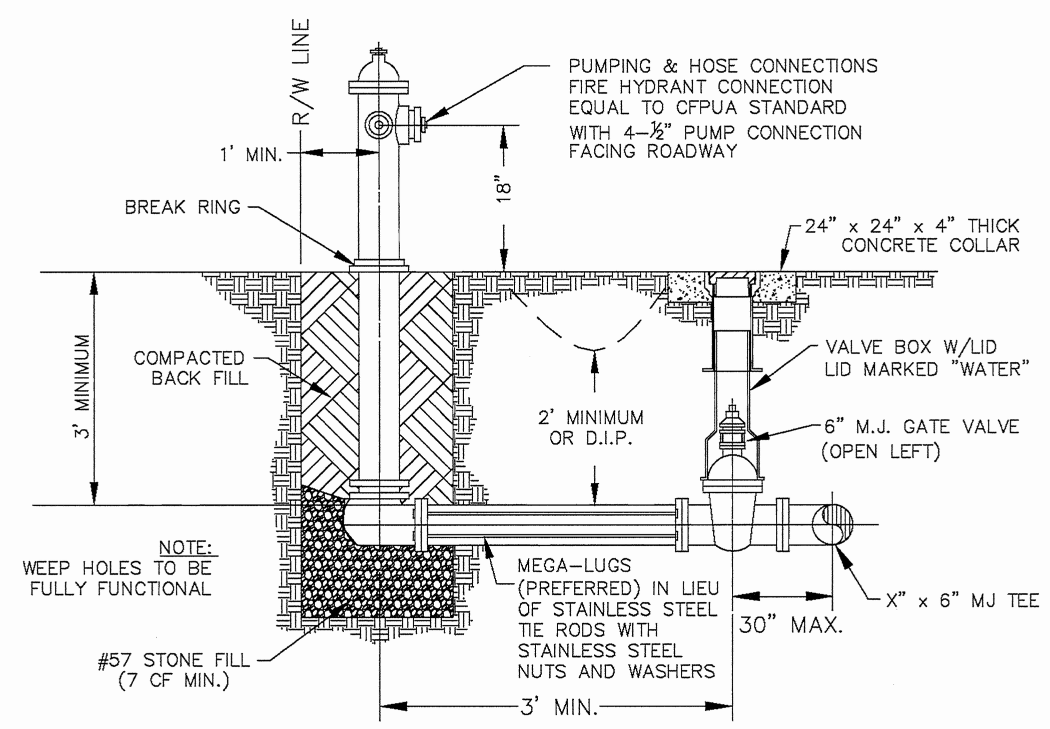

FIRE HYDRANT ASSEMBLY

NOT TO SCALE

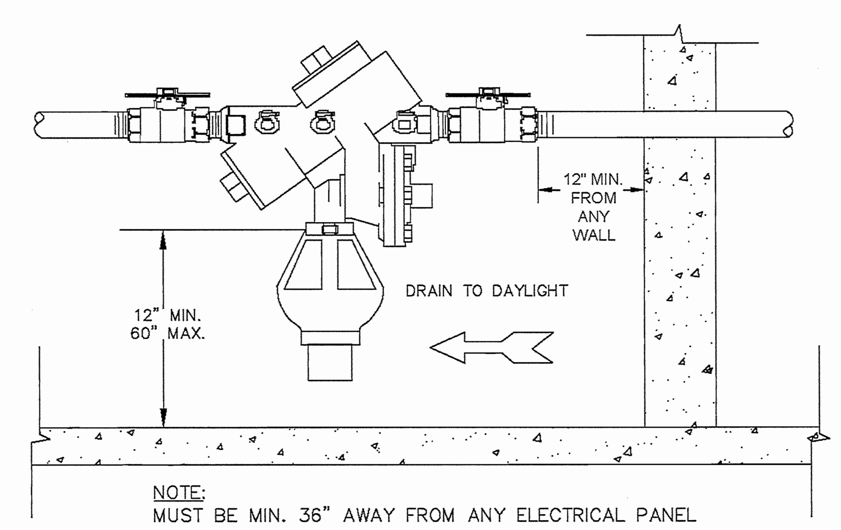

NOTE:
MUST BE MIN. 36" AWAY FROM ANY ELECTRICAL PANEL

INDOOR HORIZONTAL INSTALLATION

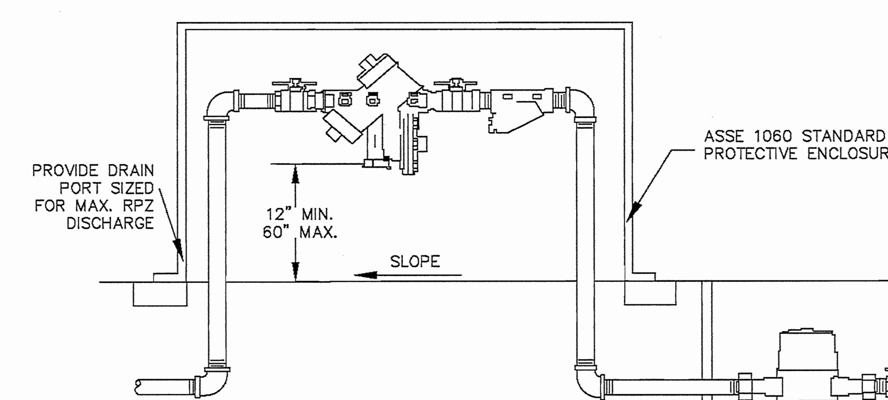

NOTE:
1. MUST BE MIN. 36" AWAY FROM ANY ELECTRICAL PANEL
2. VALVE REQ'D DOWNSTREAM OF BACKFLOW ASSEMBLY
3. VERTICAL INSTALLATION SHALL BE DESIGNED AND SUBMITTED TO CFPUA ESMD FOR APPROVAL

OUTDOOR HORIZONTAL INSTALLATION

REDUCED PRESSURE PRINCIPLE ASSEMBLY

NOT TO SCALE

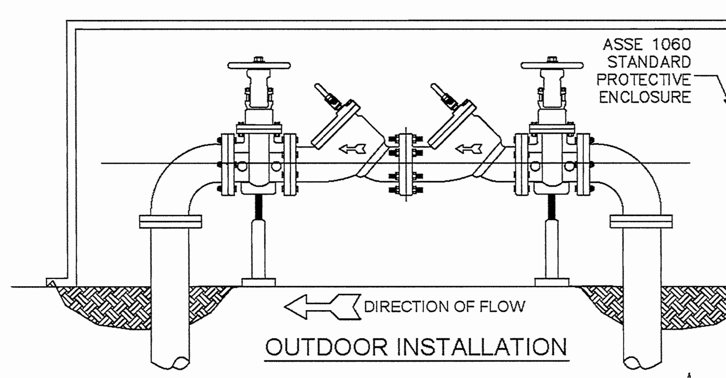

OUTDOOR INSTALLATION

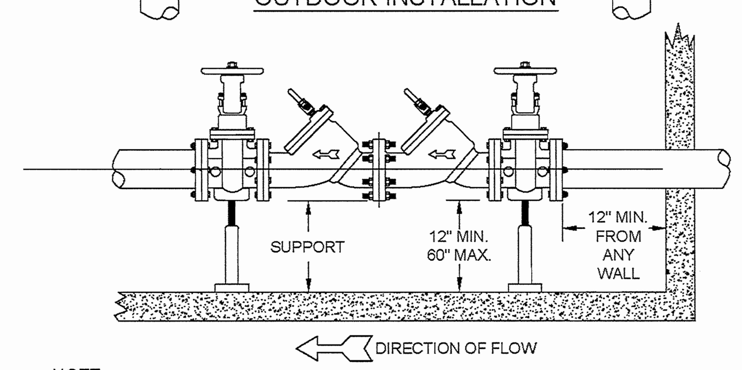

NOTE:
1. MUST BE MIN. 36" AWAY FROM ANY ELECTRICAL PANEL
2. VALVE REQ'D DOWNSTREAM OF BACKFLOW ASSEMBLY
3. VERTICAL INSTALLATION SHALL BE DESIGNED AND SUBMITTED TO CFPUA ESMD FOR APPROVAL

INDOOR INSTALLATION

DOUBLE CHECK VALVE ASSEMBLY

NOT TO SCALE

GENERAL NOTES:

1. NO EXCAVATED MATERIAL SHALL BE PLACED IN ANY STREAM, DITCH OR DRAINAGE-WAY.
2. THE CONTRACTOR IS RESPONSIBLE FOR LOCATING ALL UNDERGROUND UTILITIES BEFORE ANY CONSTRUCTION BEGINS.
3. THE CONTRACTOR IS RESPONSIBLE FOR TEMPORARY SEDIMENT AND EROSION CONTROL MEASURES WHILE CONSTRUCTION IS IN PROGRESS.
4. THE CONTRACTOR IS RESPONSIBLE FOR STABILIZATION OF ALL DISTURBED AREAS.
5. THE CONTRACTOR IS RESPONSIBLE FOR LAY DOWN & STOCKPILE AREAS (TO ARRANGE AND ENSURE COMPLIANCE WITH ALL LOCAL AND STATE REGULATIONS).

THE DETAILS SHOWN HEREON SUPERCEDE CFPUA WRITTEN TECHNICAL SPECIFICATIONS VERSIONS 1.00 - 1.04

REV:	DESCRIPTION:	DATE:

WATER DISTRIBUTION SYSTEM STANDARD DETAILS

WATER STANDARD DETAILS
WSD-1

CAPE FEAR PUBLIC UTILITY AUTHORITY
235 GOVERNMENT CENTER DRIVE
WILMINGTON, NC 28403
OFFICE: (910)332-6560
Stewardship. Sustainability. Service.

DATE: 1/9/12
SCALE: N/A
DRAWN BY: CFPUA
CHECKED BY: CFPUA
PROJECT NO. :
SHEET NO: 1/2

R:\Engineers\Design\cad files for details\Standard Details\CFPUA Standard Details\CFPUA-Water Details.dwg, 1/9/2012 4:57:39 PM, 1:1

For each open utility cut of City streets, a $325 permit shall be required from the City prior to occupancy and/or project acceptance.

CITY OF WILMINGTON NORTH CAROLINA
Public Services • Engineering Division
APPROVED STORMWATER MANAGEMENT PLAN
Date:______ Permit #______
Signed: ______

Approved Construction Plan

	Name	Date
Planning		
Traffic		
Fire		

NCDENR PWSS WATER PERMIT #: ______
WATER CAPACITY: ______ GPD
DWQ SEWER PERMIT #: ______
SEWER CAPACITY: ______ GPD
SEWER SHED # AND PLANT: ______
SEWER TO FLOW THROUGH NEI: YES or NO (CIRCLE ONE)

FINAL DESIGN - NOT RELEASED FOR CONSTRUCTION

LS3P
LS3P ASSOCIATES LTD.
2528 INDEPENDENCE BLVD. SUITE 200
WILMINGTON, NORTH CAROLINA 28412
TEL. 910.790.9901 FAX 910.790.3111
WWW.LS3P.COM

NORTH CAROLINA PROFESSIONAL ENGINEER SEAL 031591 ROBERT P. BALLAND 5/1/13

MEMBERS OF THE AMERICAN INSTITUTE OF ARCHITECTS

COPYRIGHT 2012 ALL RIGHTS RESERVED PRINTED OR ELECTRONIC DRAWINGS AND DOCUMENTATION MAY NOT BE REPRODUCED IN ANY FORM WITHOUT WRITTEN PERMISSION FROM LS3P ASSOCIATES LTD.

REVISIONS:

No.	Description	Date
1.	COW Planning Comments	4/29/13

PROJECT: 12217.PE
DATE: MAY 1, 2013
DRAWN BY: RPB
CHECKED BY: RPB

DETAILS

C-6.3

SOLUTIONS THROUGH LISTENING
SERVICE BY DESIGN

PARAMOUNTE
ENGINEERING, INC.
WILMINGTON, NC FAYETTEVILLE, NC
5911 Oleander Drive, Suite 201
Wilmington, North Carolina 28403
(910) 791-6707 (O) (910) 791-6760 (F)
NC License #: C-2846

Lower Cape Fear Hospice & LifeCareCenter

LOWER CAPE FEAR HOSPICE WILMINGTON CARE CENTER - SIX BED ADDITION 1406 PHYSICIANS DR.

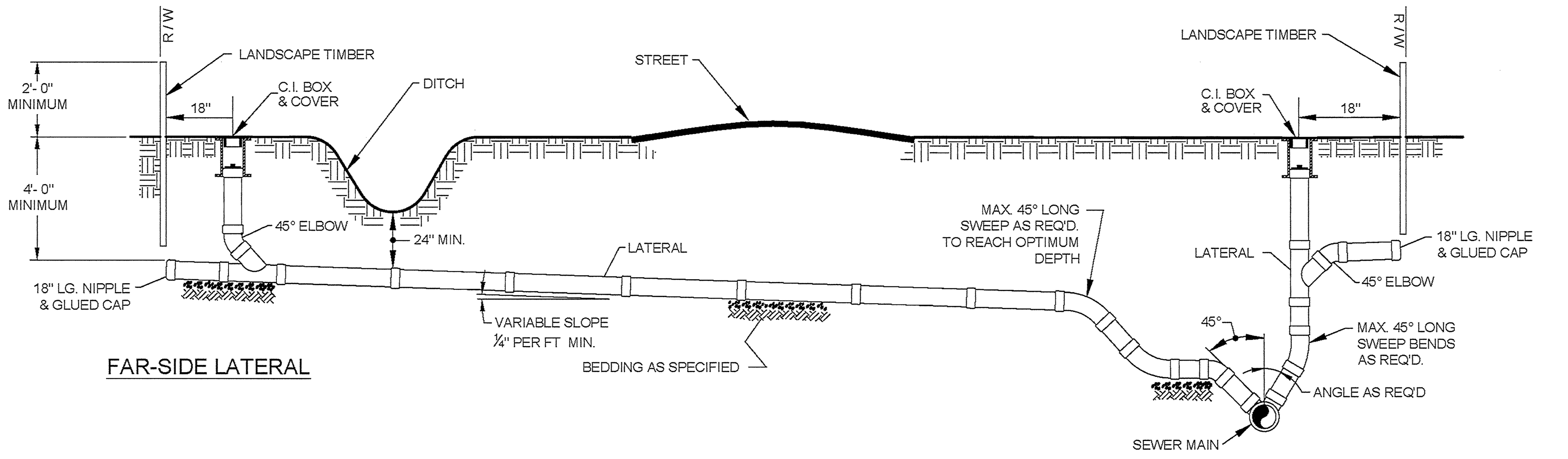

NOTE: FOR PRIVATE 8" SERVICES, MANHOLES ARE REQUIRED FOR TIE–IN TO MAIN

NEAR-SIDE LATERAL WITH RIGHT-OF-WAY RESTRICTIONS

STANDARD SERVICE CONNECTION TO SANITARY SEWER

NOT TO SCALE

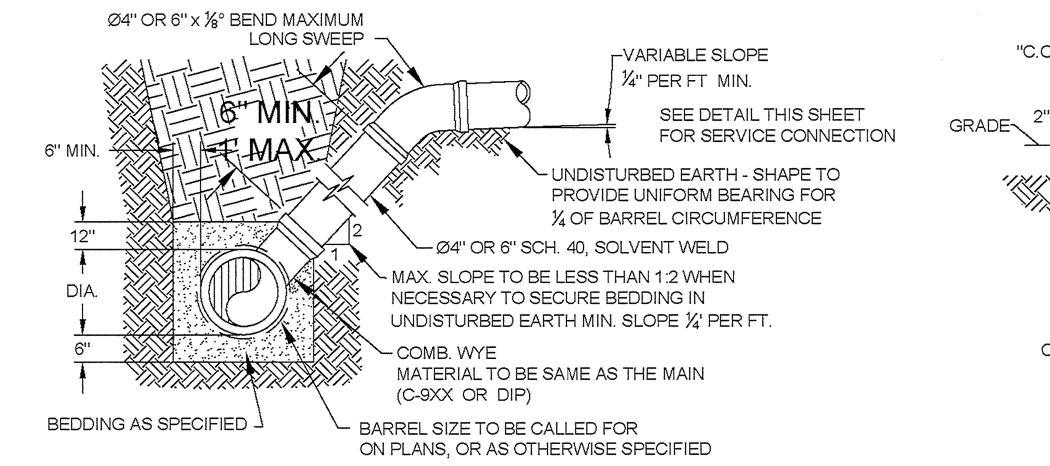

NOTE: FOR PRIVATE 8" SERVICES, MANHOLES ARE REQUIRED FOR TIE–IN TO MAIN

STANDARD SERVICE LATERAL

(MAIN DEPTH LESS THAN 8ft)

NOT TO SCALE

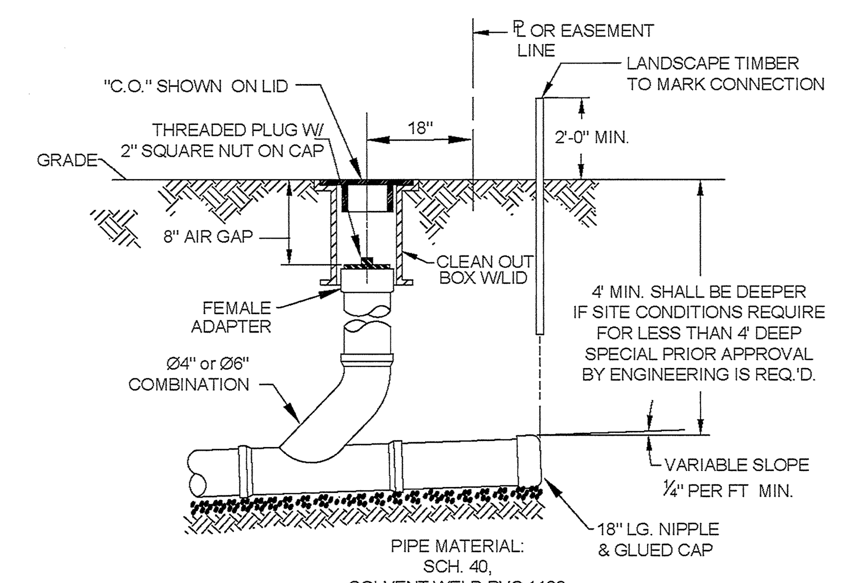

NOTE: FOR PRIVATE 8" SERVICES, MANHOLES ARE REQUIRED FOR TIE–IN TO MAIN

SERVICE CONNECTION & CLEAN-OUT

NOT TO SCALE

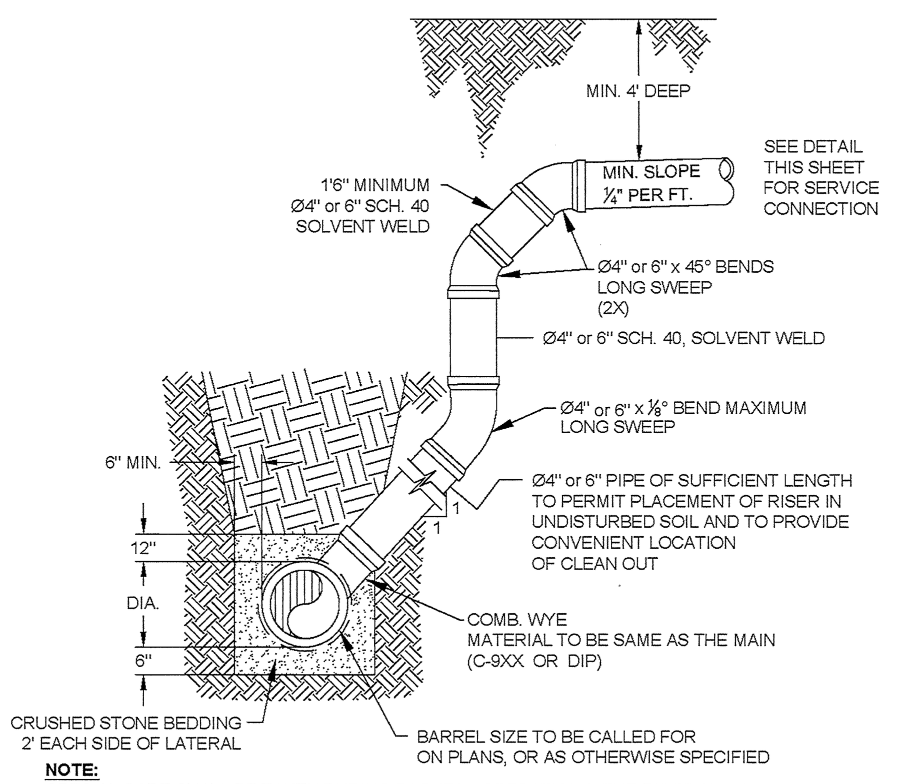

NOTE:
SPECIAL CARE SHALL BE TAKEN DURING BACKFILL OPERATIONS. THE RISER SHALL BE PLUMB AND TRUE AT ALL TIMES, AND REST ON FIRM, STABLE FOUNDATION.
FOR PRIVATE 8" SERVICES, MANHOLES ARE REQUIRED FOR TIE–IN TO MAIN

DEEP SERVICE LATERAL

(MAIN DEPTH GREATER THAN 8ft)

NOT TO SCALE

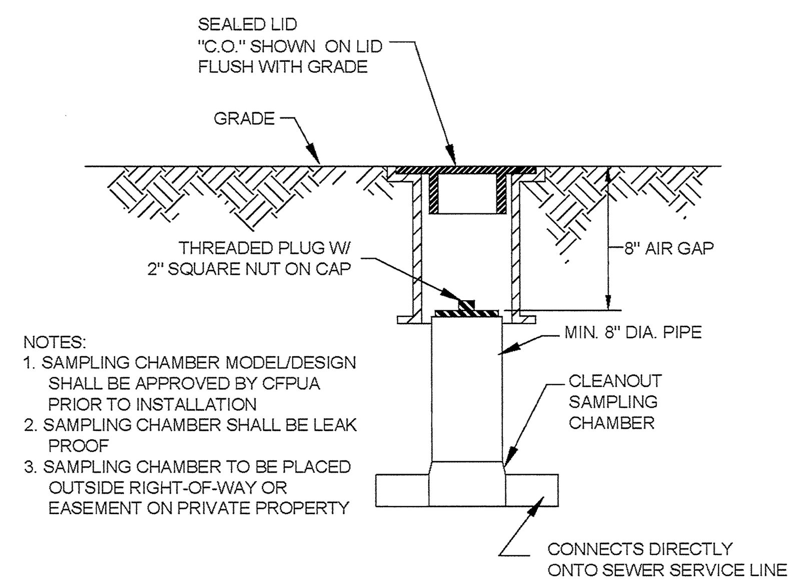

NOTES:
1. SAMPLING CHAMBER MODEL/DESIGN SHALL BE APPROVED BY CFPUA PRIOR TO INSTALLATION
2. SAMPLING CHAMBER SHALL BE LEAK PROOF
3. SAMPLING CHAMBER TO BE PLACED OUTSIDE RIGHT-OF-WAY OR EASEMENT ON PRIVATE PROPERTY

SAMPLING CHAMBER

NOT TO SCALE

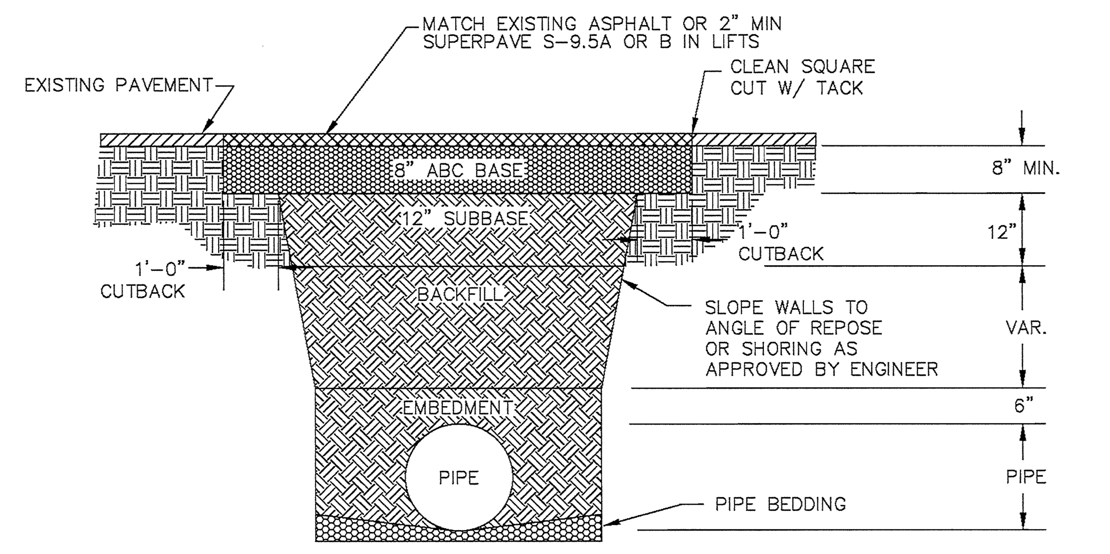

NOTES:
1. BACKFILL SHALL BE SUITABLE MATERIAL THAT IS FREE FROM HEAVY CLAY, GUMBOS, DEBRIS, ORGANICS AND LITTLE TO NO EXCESSIVE MOISTURE.
2. SELECT BACKFILL MAY BE SUBSTITUTED OR REQUIRED BY CITY TO ACHIEVE COMPACTION, (I.E. #57, ABC, CRUSHED LIMESTONE, CLEAN SAND, FLOWABLE FILL, ETC).
3. 8–INCH OF ABC BASE MATERIAL SHALL BE USED ON CITY STREETS.
4. BACKFILL AND BASE MATERIALS SHALL BE COMPACTED 12" MINIMUM LIFTS
5. SOIL SHALL BE COMPACTED BY A MECHANIZED TAMPER (I.E JUMPING JACK), HOWEVER, VIBRATORY ROLLERS > 18" WIDTH MAY BE USED FOR LARGER EXCAVATIONS. THE PLATE TAMP METHOD SHALL NOT BE USED.
6. ALL APPROVED CASTINGS SHALL BE SET FLUSH TO GRADE AND SUPPORTED IF APPLICABLE.
7. ABC BASE AND SUBBASE COMPACTED TO 98% AND BACKFILL AND EMBEDMENT COMPACTED TO 90% AS DETERMINED BY THE MODIFIED PROCTOR AASHTO METHOD T–99.
8. 1–FOOT CUTBACKS OF ASPHALT SHALL BE PREPARED ON UNDISTURBED SOIL. MINIMUM ASPHALT DENSITY IS 90%.

PAVEMENT REPAIR WHERE PIPE INSTALLED

(FOR PRIVATE ROADS AND PAVED AREAS; CONTRACTOR TO MEET MIN. REQUIREMENTS AS DEFINED BY RIGHT-OF-WAY OWNER FOR PUBLIC ROAD REPAIRS)

NOT TO SCALE

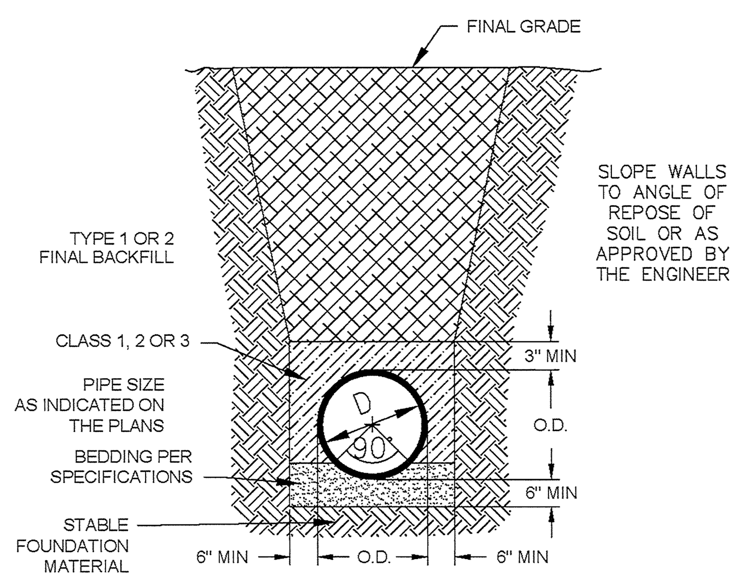

CL 50 DUCTILE IRON DR 18 PVC PIPE TRENCH DETAIL

NOT TO SCALE

NOTE:
PAVEMENT WIDTH AND LOCATION IN R/W VARIES. SEE PLAN FOR INDIVIDUAL LOCATION.

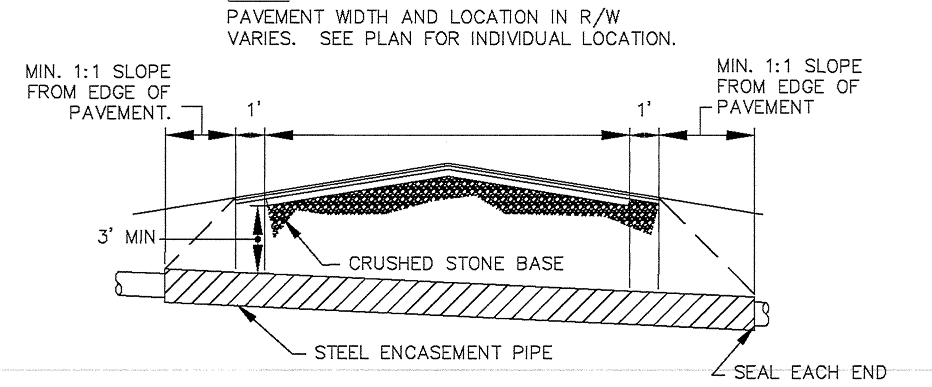

NOTES:
1. CASING WILL BE INSTALLED AT LINE AND GRADE SHOWN ON INDIVIDUAL PROFILE FOR EACH CROSSING. BORING/JACKING TO LINE AND GRADE IS REQUIRED.
2. TRACER WIRE SHALL BE CONTINUED THROUGH CASING

TYPICAL BORING/JACKING DETAIL

NOT TO SCALE

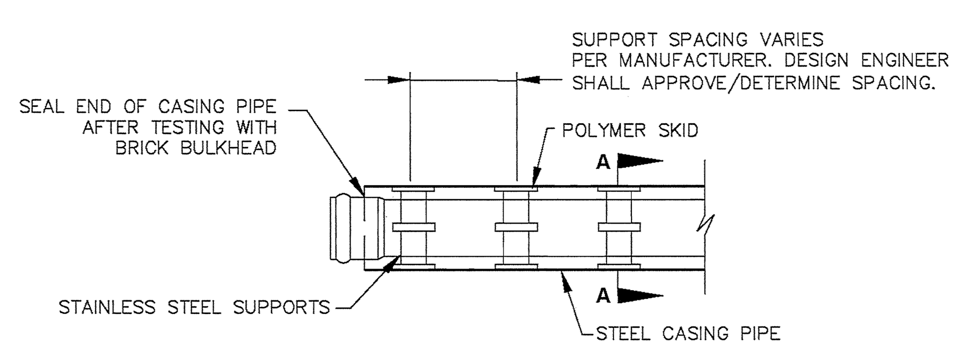

NOTE: PIPE SUPPORT TO BE PLACED TO PROVIDE PROPER SUPPORT, ALIGNMENT, AND GRADE AS SPECIFIED. CONTINUOUS SUPPORTS MAY BE USED AS ALTERNATIVE. OIL, GREASE, OR PETROLEUM PRODUCT MAY NOT BE USED AS LUBRICANT.

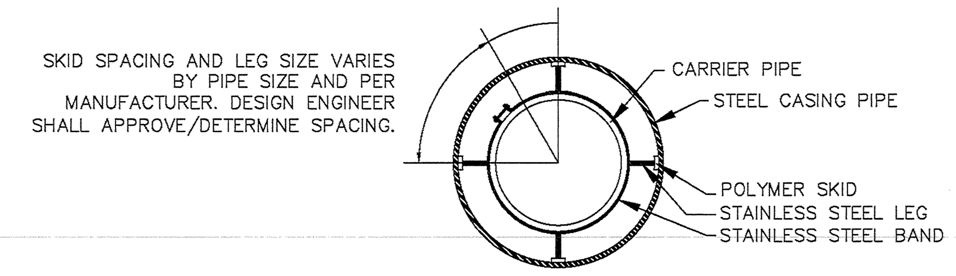

SECTION A-A
NOT TO SCALE

PIPE CASING SUPPORT DETAIL

NOT TO SCALE

GENERAL NOTES:

1. NO EXCAVATED MATERIAL SHALL BE PLACED IN ANY STREAM, DITCH OR DRAINAGE-WAY.
2. THE CONTRACTOR IS RESPONSIBLE FOR LOCATING ALL UNDERGROUND UTILITIES BEFORE ANY CONSTRUCTION BEGINS.
3. THE CONTRACTOR IS RESPONSIBLE FOR TEMPORARY SEDIMENT AND EROSION CONTROL MEASURES WHILE CONSTRUCTION IS IN PROGRESS.
4. THE CONTRACTOR IS RESPONSIBLE FOR STABILIZATION OF ALL DISTURBED AREAS.
5. THE CONTRACTOR IS RESPONSIBLE FOR LAY DOWN & STOCKPILE AREAS (TO ARRANGE AND INSURE COMPLIANCE WITH ALL LOCAL AND STATE REGULATIONS).

THE DETAILS SHOWN HEREON SUPERCEDE CFPUA WRITTEN TECHNICAL SPECIFICATIONS VERSIONS 1.00 - 1.04

REV:	DESCRIPTION:	DATE:

SANITARY SEWER STANDARD DETAILS

SANITARY SEWER STANDARD DETAILS
SS-2

CAPE FEAR PUBLIC UTILITY AUTHORITY
235 GOVERNMENT CENTER DRIVE
WILMINGTON, NC 28403
OFFICE: (910)332-6560
Stewardship. Sustainability. Service.

DATE: 1/9/12
SCALE: N/A
DRAWN BY: CFPUA
CHECKED BY: CFPUA
PROJECT NO.:

SHEET NO: 2/4

R:\Engineers\Design\cad files for details\Standard Details\CFPUA Standard Details\CFPUA-Sewer Details.dwg, 1/9/2012 5:00:11 PM, 1:1

For each open utility cut of City streets, a $325 permit shall be required from the City prior to occupancy and/or project acceptance.

CITY OF WILMINGTON NORTH CAROLINA
Public Services • Engineering Division
APPROVED STORMWATER MANAGEMENT PLAN
Date:__________ Permit #__________
Signed: __________

Approved Construction Plan

	Name	Date
Planning		
Traffic		
Fire		

NCDENR PWSS WATER PERMIT #: __________
WATER CAPACITY: __________GPD
DWQ SEWER PERMIT #: __________
SEWER CAPACITY: __________GPD
SEWER SHED # AND PLANT: __________
SEWER TO FLOW THROUGH NEI: YES or NO (CIRCLE ONE)

FINAL DESIGN - NOT RELEASED FOR CONSTRUCTION

LS3P ASSOCIATES LTD.
2528 INDEPENDENCE BLVD. SUITE 200
WILMINGTON, NORTH CAROLINA 28412
TEL. 910.790.9901 FAX 910.790.3111
WWW.LS3P.COM

NORTH CAROLINA PROFESSIONAL ENGINEER SEAL 031591 ROBERT P. BALLAND 5/1/13

MEMBERS OF THE AMERICAN INSTITUTE OF ARCHITECTS

COPYRIGHT 2012 ALL RIGHTS RESERVED PRINTED OR ELECTRONIC DRAWINGS AND DOCUMENTATION MAY NOT BE REPRODUCED IN ANY FORM WITHOUT WRITTEN PERMISSION FROM LS3P ASSOCIATES LTD.

REVISIONS:

No.	Description	Date
1.	COW Planning Comments	4/29/13

PROJECT: 12217.PE
DATE: MAY 1, 2013
DRAWN BY: RPB
CHECKED BY: RPB

DETAILS

C-6.4

SOLUTIONS THROUGH LISTENING
SERVICE BY DESIGN