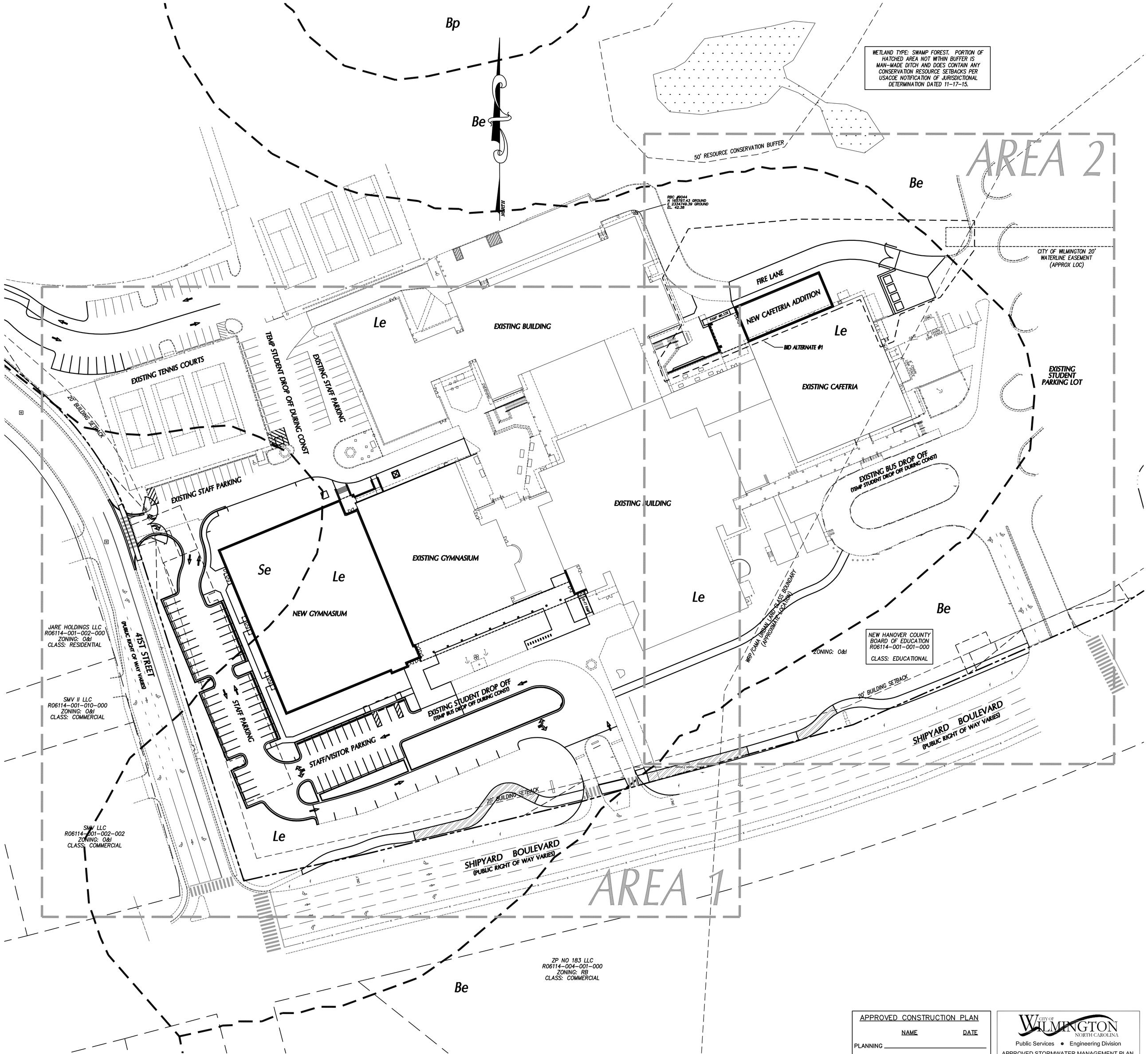

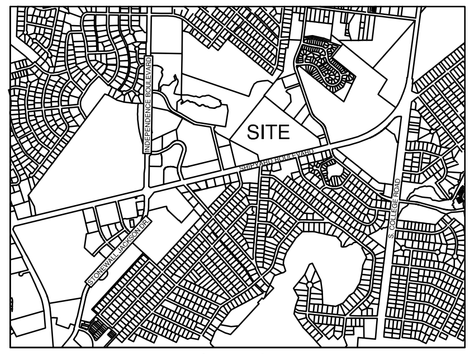

VICINITY MAP (N.T.S.)

SITE DATA

PROJECT:	HOGGARD HIGH SCHOOL
OWNER:	NEW HANOVER COUNTY SCHOOLS
OWNER CONTACT:	NEW HANOVER COUNTY BOARD OF EDUCATION EDDIE ANDERSON 6410 CAROLINA BEACH ROAD WILMINGTON, NC 28412 910-254-4325
DESIGNER:	CLH DESIGN, PA
DESIGNER CONTACT:	GLENN MEDLIN REGENCY PARK 400 REGENCY FOREST DR., STE. 120 CARY, NC 27518 PHONE: 919-319-6716 FAX: 919-319-7516
PROJECT ADDRESS:	4305 SHIPYARD BOULEVARD WILMINGTON, NC 2803
PIN:	R06114-001-001-000
ZONING:	O&I
EXISTING USE:	INSTITUTIONAL/EDUCATIONAL
PROPOSED USE:	INSTITUTIONAL/EDUCATIONAL
TRACT AREA:	62.74 ACRES
FLOODPLAIN:	SITE IS NOT WITHIN A FLOODPLAIN (REF: FIRM 3720313600J, APRIL 3, 2006)

A PORTION OF THE PROPERTY IS ENCUMBERED BY WETLANDS/CONSERVATION RESOURCE. REFER TO USACOE JURISDICTIONAL DETERMINATION DATED 11-17-15 FOR ADDITIONAL INFORMATION.

THERE ARE NO ENDANGERED SPECIES OR HABITATS ON THIS SITE.

BUILDING SETBACK:	20'
TYPE OF CONSTRUCTION:	1-B

PARKING REQUIREMENTS:

PARKING CODE:	1 SPACE PER 5 STUDENTS (OR 1 SPACE PER 3 STADIUM SEATS)
NO. OF STUDENTS:	1900
TOTAL SPACES REQ'D:	380 (500)
EXISTING SPACES:	787
EXISTING SPACES REMOVED:	177
NEW SPACES ADDED:	81
TOTAL SPACES PROVIDED:	691
TOTAL H/C SPACES REQ'D:	14
EXISTING H/C SPACES:	22
EXISTING H/C SPACES REMOVED:	6
NEW H/C SPACES ADDED:	4 (W/ 1 VAN ACCESSIBLE)
TOTAL H/C SPACES PROVIDED:	20

GROSS FLOOR AREA:	EXISTING: 115,165 SQFT. PROPOSED: 34,484 SQFT. MOBILE UNITS: 2,200 SQ. FT. TOTAL: 151,849 SQFT.
PERCENT INCREASE:	22.71%
PROPOSED GYM ADD'N FOOTPRINT:	30,598 SQ FT.
PROPOSED CAFETRIA ADD'N FOOTPRINT:	3,886 SQ FT.
BUILDING LOT COVERAGE-EXISTING:	4.3%
BUILDING LOT COVERAGE-PROPOSED:	5.6%
MAX. BUILDING HEIGHT PROPOSED:	45'
EXISTING IMPERVIOUS (WITHIN PROJECT LIMITS):	8.88-AC (386,812.80-SF)
PROPOSED IMPERVIOUS (WITHIN PROJECT LIMITS):	8.72-AC (379,843.20-SF)

CAMA LAND USE CLASSIFICATION:
URBAN

CAMA AREAS OF CONCERN:
C;SW (SWAMP WATERS); PERENNIAL

A PORTION OF THE PROPERTY IS LOCATED IN THE CAMA LAND CLASSIFICATION WATERSHED RESOURCE PROTECTION (WRP) AREA AND IMPERVIOUS AREAS WITHIN THE WRP SHALL BE LIMITED TO 25% UNLESS THE PROJECT MEETS ARTICLE 10-EXCEPTIONALLY DESIGNED PROJECTS OF THE LDC.

HEWLETT'S CREEK CLASSIFICATION:
SA; HQW
INDEX # 18-87-26

THE SITE HAS NO LOCAL, STATE OR FEDERALLY RECOGNIZED HISTORIC STRUCTURES OR ARCHAEOLOGICAL RESOURCES.

THE SITE HAS NO CEMETARIES, BURIAL SITES OR BURIAL GROUNDS.

REFER TO PLAN SHEET C12 FOR CITY OF WILMINGTON STANDARD NOTES

A TREE REMOVAL/PRESERVATION PERMIT IS REQUIRED PRIOR TO REMOVING ANY TREES. CONTRACTOR SHALL OBTAIN & COMPLETE PERMIT. CONTACT CITY OF WILMINGTON ZONING DEPARTMENT TO OBTAIN COPY OF PERMIT.

EXTERIOR BUILDING MATERIALS WILL BE ALUMINUM CURTAIN WALL, BRICK AND METAL PANEL SOFFIT & FASCIA AT THE ROOF. ROOFS THAT ARE NOT FLAT WILL BE STANDING SEAM METAL. 'ALUMINUM CURTAIN WALL' IS GENERIC DESC. FOR A LARGE SPAN GLASS & GLASS FRAMING SYSTEM, WHICH ARE APPROVED MAT'L IN O&I-1 DISTRICT.

APPROVED CONSTRUCTION PLAN

	NAME	DATE
PLANNING		
TRAFFIC		
FIRE		

CITY OF WILMINGTON NORTH CAROLINA
Public Services • Engineering Division
APPROVED STORMWATER MANAGEMENT PLAN
Date:_____ Permit #_____
Signed: _____

GRAPHIC SCALE
50 0 25 50 100 200
(IN FEET)
1 inch = 50 ft.

BOWMAN MURRAY HEMINGWAY
ARCHITECTS
514 Market Street
Wilmington, NC 28401
Tel - (910) 762-2621
Fax - (910) 762-8506

Project ID # 900-9005

CLH DESIGN, PA
400 Regency Forest Dr.
Suite 120
Cary, NC 27518
Phone: 919.319.6716
Fax: 919.319.7516
LA: C-106; PE: C-1895

NORTH CAROLINA PROFESSIONAL SEAL 23953 ENGINEER KENNETH A. LORING
3-14-16

Renovations and Additions to: John T. Hoggard High School

4305 Shipyard Blvd.
Wilmington, North Carolina 28403

JOB NUMBER	15-120
DRAWN BY	JGM
CHECKED BY	JGM
DATE	APRIL 1, 2016
REVISIONS	

CONSTRUCTION DOCUMENTS: 4-1-2016

OVERALL SITE PLAN

SHEET NUMBER

C-1.0

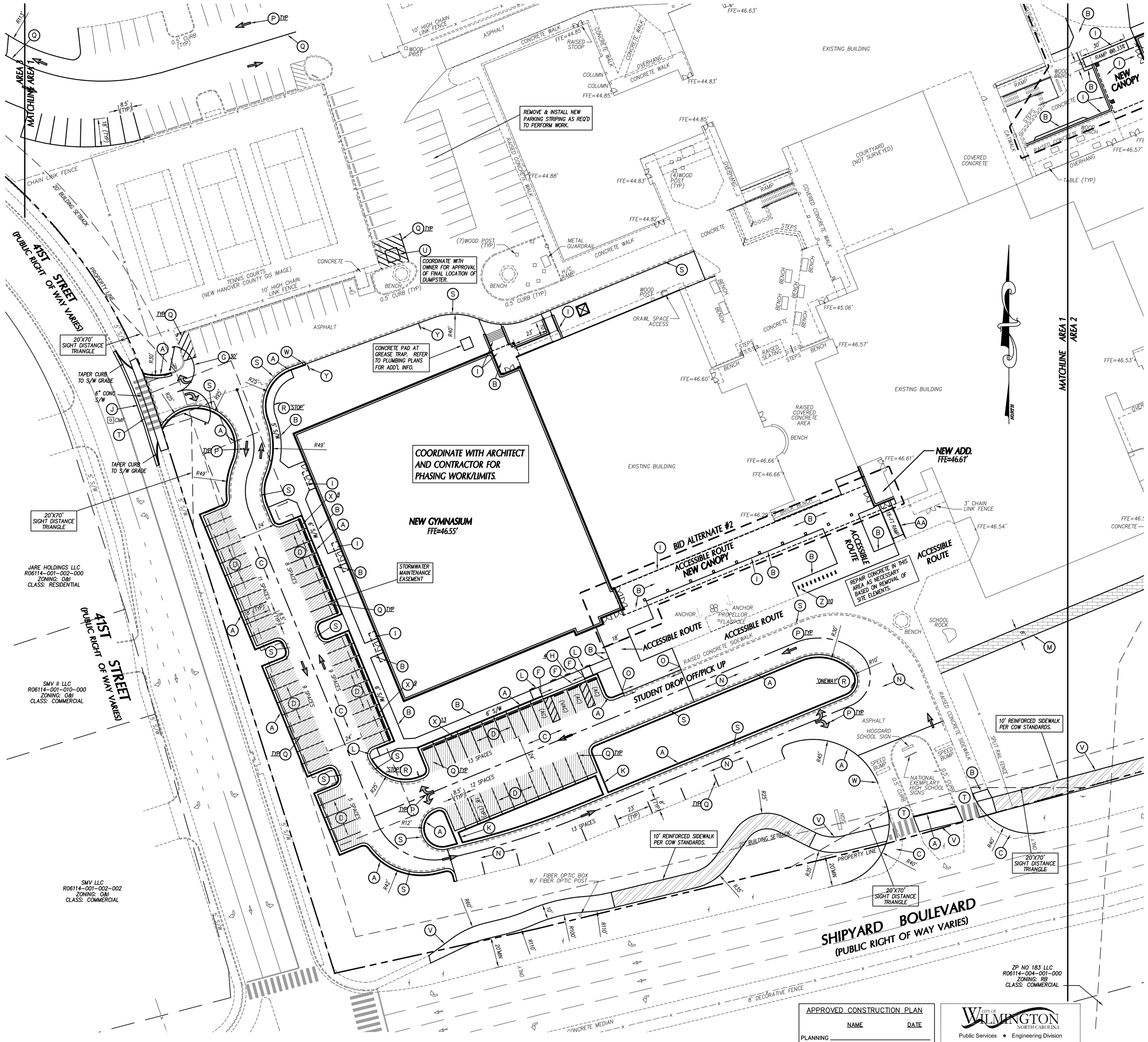

KEY NOTES

- (A) 24" CONCRETE CURB & GUTTER, SEE DETAIL SHEET C7.2.
- (B) CONCRETE SIDEWALK, SEE DETAIL SHEET C7.2.
- (C) HEAVY DUTY ASPHALT PAVEMENT, SEE DETAIL SHEET C7.2.
- (D) LIGHT DUTY ASPHALT PAVEMENT, SEE DETAIL SHEET C7.2.
- (E) CONCRETE PAVEMENT, SEE DETAIL SHEET C7.2.
- (F) SIDEWALK FLUSH W/ PAVEMENT, SEE ACCESS. PARKING CURB RAMP DETAIL SHT C7.2.
- (G) PIPE GATE, SEE DETAIL SHEET C7.9.
- (H) ACCESSIBLE PARKING SIGNAGE, SEE DETAIL SHEET C7.3.
- (I) SEE ARCHITECTURAL PLANS FOR SCREEN WALLS, RAMP, CANOPY, STEPS, ETC.
- (J) CONCRETE DRIVEWAY APRON, SEE DETAIL SHEET C7.2.
- (K) CONCRETE CURB FLUME, SEE DETAIL SHEET C7.3.
- (L) ACCESSIBLE CURB RAMP, SEE DETAIL SHEET C7.3.
- (M) BRICK PAVERS, SEE DETAIL SHEET C7.2.
- (N) ASPHALT OVERLAY, SEE DETAIL SHEET C7.2.
- (O) RAISED CONCRETE SIDEWALK, SEE DETAIL SHEET C7.2.
- (P) DIRECTIONAL ARROW, SEE TRAFFIC CONTROL NOTES THIS SHEET.
- (Q) SOLID WHITE MARKING, SEE TRAFFIC CONTROL NOTES THIS SHEET.
- (R) TRAFFIC CONTROL SIGNAGE, SEE TRAFFIC CONTROL NOTES THIS SHEET.
- (S) FIRE LANE STRIPING, SEE TRAFFIC CONTROL NOTES THIS SHEET.
- (T) HI-VIS CROSSWALK, SEE TRAFFIC CONTROL NOTES THIS SHEET.
- (U) DUMPSTERS, PROVIDED BY OWNER, RELOCATED BY CONTRACTOR. COORDINATE WITH OWNER FOR TEMPORARY LOCATION DURING CONSTRUCTION. REFER TO STAKING PLANS FOR FINAL LOCATION AFTER CONSTRUCTION.
- (V) 10' WIDE MUTLI-USE PATH PER CGW STANDARDS, SEE DETAIL SHEET C7.3.
- (W) STANDARD METHOD OF ENDING CURB, SEE DETAIL SHEET C7.2.
- (X) PRE-CAST CONCRETE WHEEL STOP, SEE DETAIL SHEET C7.2.
- (Y) NO PARKING – FIRE LANE SIGNAGE, SEE DETAIL SHEET C7.2.
- (Z) BIKE RACKS, SEE DETAIL SHEET C7.2.
- (AA) ON-GRADE RAMP, SEE DETAIL SHEET C7.9.

GENERAL NOTES

1. ALL DIMENSIONS SHOWN ARE FACE OF CURB AND FACE OF BUILDING WALL, UNLESS OTHERWISE SHOWN.
2. CONTRACTOR SHALL BE RESPONSIBLE FOR FIELD VERIFICATION OF ALL DIMENSIONS SHOWN AND CONTACT THE ARCHITECT IF ANY DISCREPANCIES OCCUR.
3. CONSTRUCTION STAKE OUT IS THE RESPONSIBILITY OF THE CONTRACTOR.
4. ALL SIGNS AND PAVEMENT MARKINGS ARE TO MEET MUTCD (MANUAL ON UNIFORM TRAFFIC CONTROL DEVICES) STANDARDS.
5. PAVEMENT MARKINGS IN PUBLIC RIGHT-OF-WAYS AND FOR DRIVEWAYS ARE TO BE THERMOPLASTIC AND MEET CITY OF WILMINGTON AND/OR NCDOT STANDARDS.
6. ALL CONSTRUCTION SHALL BE IN ACCORDANCE WITH CITY OF WILMINGTON STANDARDS AND SPECIFICATIONS.
7. REPLACEMENT OF ANY BROKEN OR DAMAGED CONCRETE SIDEWALK PANELS OR CURBING THAT OCCURS DURING CONSTRUCTION IS THE RESPONSIBILITY OF THE CONTRACTOR.
8. ALL PARKING STALL RADII SHALL BE 4' UNLESS OTHERWISE NOTED.
9. PIPE GATE AT THE BUS DROP-OFF/FIRE LANE SHALL MEET THE CITY OF WILMINGTON FIRE SERVICES GATE REQUIREMENTS FOR LOCKING ARRAGEMENTS.
10. A PORTION OF THIS PROPERTY IS LOCATED IN THE 100 YEAR FLOOD ZONE AS SHOWN IN THE COMMUNITY PANEL 3701710005 C DATED NOV. 4,1997.

TRAFFIC CONTROL NOTES

1. ALL SITE SIGNAGE SHALL BE IN ACCORDANCE WITH THE MANUAL ON UNIFORM TRAFFIC CONTROL DEVICES (MUTCD) AND NCDOT STANDARDS.

SIGN	MUTCD STD.	SIZE
STOP	R1-1	30"x30"
ONE WAY	R6-1	36"x12"

2. ALL SIGNS SHALL BE MOUNTED WITH 7-FT MIN. VERTICAL CLEARANCE TO THE BOTTOM OF THE SIGN ON 2-LB. GALV. STEEL U-CHANNEL POST SET IN 3-FT DEEP x 12-IN DIA. CONCRETE FOOTING.
3. ALL PAVMENT MARKINGS SHALL BE IN ACCORDANCE WITH THE MUTCD AND NCDOT STANDARDS AND THE PROJECT SPECIFICATIONS.

MARKING	NCDOT STD.	SIZE	COLOR
PARKING SPACE	–	4-IN	WHT.
DIRECTIONAL ARROWS	1205.08	STD.	WHT.
NO PARKING – FIRE LANE *	–	4-IN	WHT.
SOLID	–	4-IN	WHT.
CROSSWALK	1205.07(HI-VIS)	24-IN	WHT.

* NO PARKING – FIRE LANE MARKING SHALL CONSIST OF A 4" SOLID WHITE STRIPE AND 8" HIGH WHITE TEXT "NO PARKING – FIRE LANE" AT 50' INTERVALS. PROVIDE IN ALL PAVED AREAS AS DESIGNATED BY FIRE MARSHALL.

4. ALL PAVEMENT MARKINGS ON SITE MAY BE EITHER THERMOPLASTIC OR ALKYD-RESIN TYPE PAINT.
5. ALL SIGNAGE SHALL BE FIELD STAKED AND THE LOCATIONS APPROVED BY CLH DESIGN PRIOR TO SIGN INSTALLATION.
6. CENTER ALL DIRECTIONAL ARROWS WITHIN TRAVEL LANE.

GRAPHIC SCALE

30 0 15 30 60 120

(IN FEET)
1 inch = 30 ft.

APPROVED CONSTRUCTION PLAN

	NAME	DATE
PLANNING		
TRAFFIC		
FIRE		

CITY OF WILMINGTON NORTH CAROLINA
Public Services • Engineering Division
APPROVED STORMWATER MANAGEMENT PLAN
Date:_____ Permit #_____
Signed: _____

BOWMAN MURRAY HEMINGWAY
ARCHITECTS
514 Market Street
Wilmington, NC 28401
Tel - (910) 762-2621
Fax - (910) 762-8506

Project ID # 900-9005

CLH DESIGN, P.A.
400 Regency Forest Dr.
Suite 120
Cary, NC 27518
Phone: 919.319.6716
Fax: 919.319.7516
LA: C-106 PE: C-1595

NORTH CAROLINA PROFESSIONAL SEAL LANDSCAPE ARCHITECT JAMES GLENN MEDLIN 1861 3-14-16

Renovations and Additions to: John T. Hoggard High School

4305 Shipyard Blvd.
Wilmington, North Carolina 28403

CONSTRUCTION DOCUMENTS: 4-1-2016

JOB NUMBER	15-120
DRAWN BY	JGM
CHECKED BY	JGM
DATE	APRIL 1, 2016
REVISIONS	

SITE STAKING PLAN

SHEET NUMBER

C-1.1

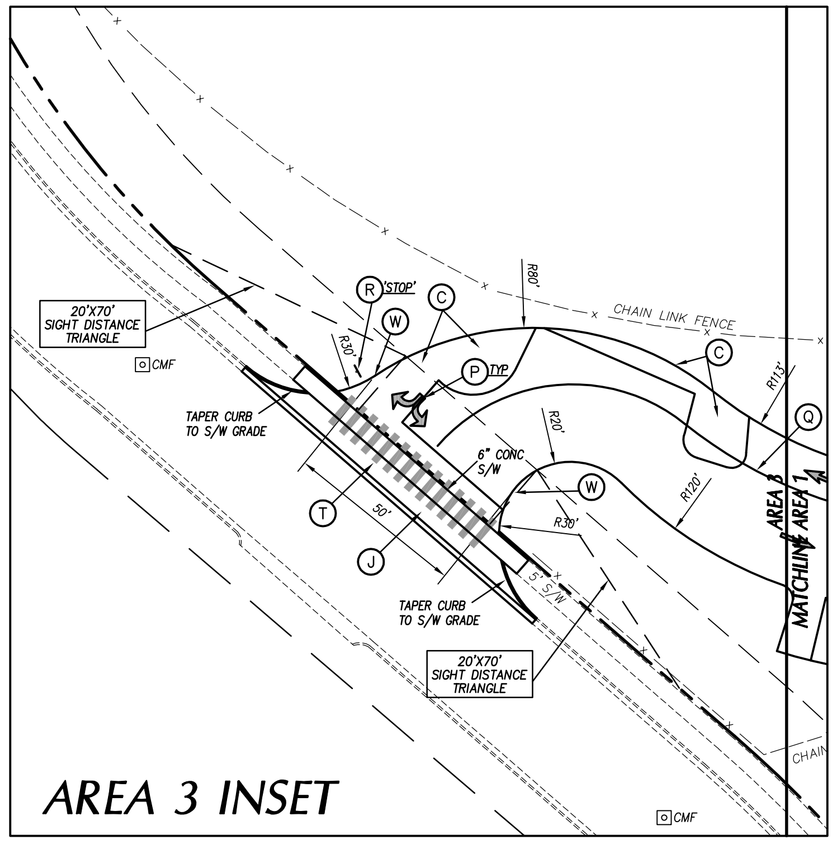

AREA 3 INSET

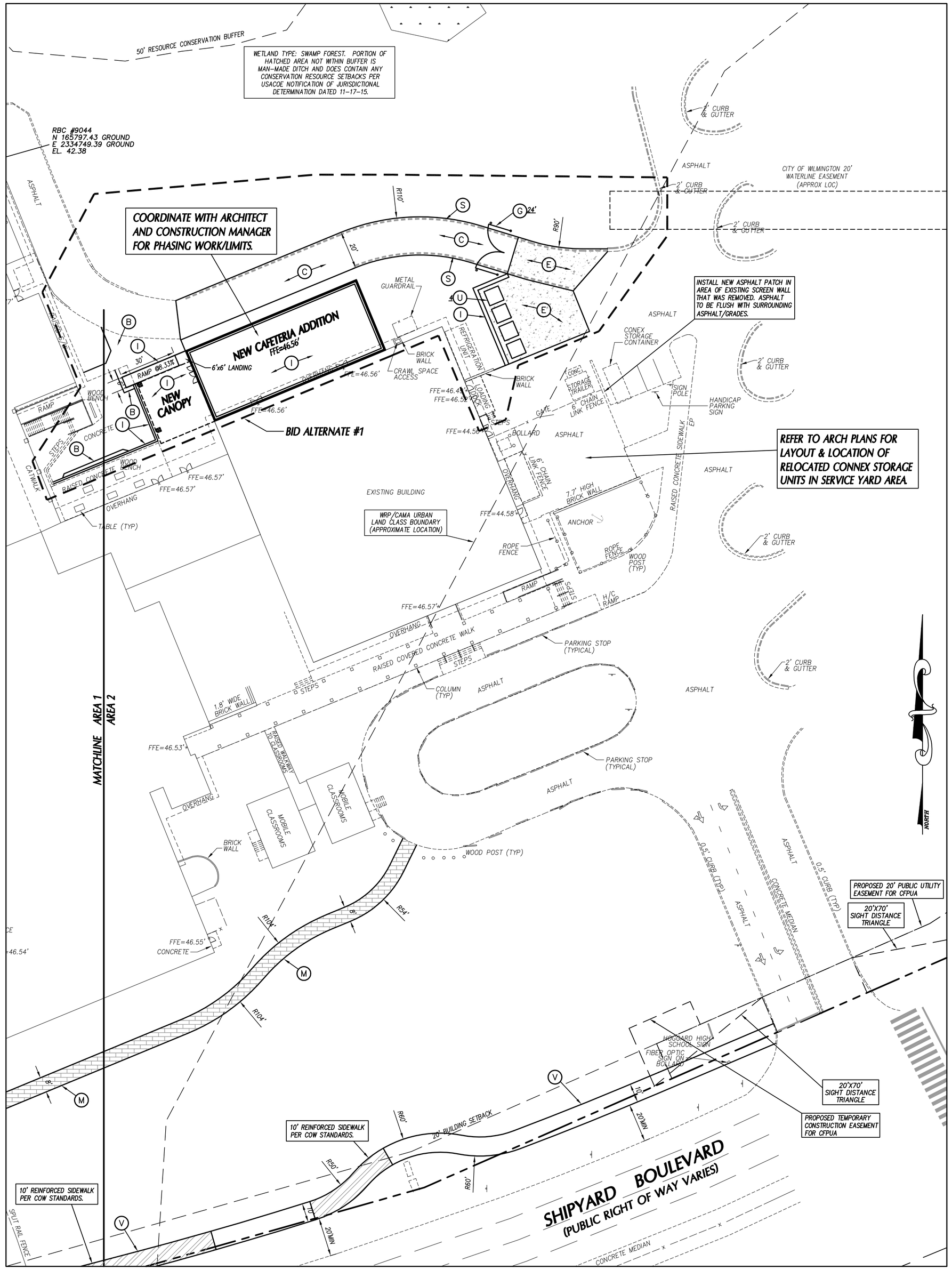

KEY NOTES

- (A) 24" CONCRETE CURB & GUTTER, SEE DETAIL SHEET C7.2.
- (B) CONCRETE SIDEWALK, SEE DETAIL SHEET C7.2.
- (C) HEAVY DUTY ASPHALT PAVEMENT, SEE DETAIL SHEET C7.2.
- (D) LIGHT DUTY ASPHALT PAVEMENT, SEE DETAIL SHEET C7.2.
- (E) CONCRETE PAVEMENT, SEE DETAIL SHEET C7.2.
- (F) SIDEWALK FLUSH W/ PAVEMENT, SEE ACCESS. PARKING CURB RAMP DETAIL SHT C7.2.
- (G) PIPE GATE, SEE DETAIL SHEET C7.9.
- (H) ACCESSIBLE PARKING SIGNAGE, SEE DETAIL SHEET C7.3.
- (I) SEE ARCHITECTURAL PLANS FOR SCREEN WALLS, RAMP, CANOPY, STEPS, ETC.
- (J) CONCRETE DRIVEWAY APRON, SEE DETAIL SHEET C7.2.
- (K) CONCRETE CURB FLUME, SEE DETAIL SHEET C7.3.
- (L) ACCESSIBLE CURB RAMP, SEE DETAIL SHEET C7.3.
- (M) BRICK PAVERS, SEE DETAIL SHEET C7.2.
- (N) ASPHALT OVERLAY, SEE DETAIL SHEET C7.2.
- (O) RAISED CONCRETE SIDEWALK, SEE DETAIL SHEET C7.2.
- (P) DIRECTIONAL ARROW, SEE TRAFFIC CONTROL NOTES THIS SHEET.
- (Q) SOLID WHITE MARKING, SEE TRAFFIC CONTROL NOTES THIS SHEET.
- (R) TRAFFIC CONTROL SIGNAGE, SEE TRAFFIC CONTROL NOTES THIS SHEET.
- (S) FIRE LANE STRIPING, SEE TRAFFIC CONTROL NOTES THIS SHEET.
- (T) HI-VIS CROSSWALK, SEE TRAFFIC CONTROL NOTES THIS SHEET.
- (U) DUMPSTERS, PROVIDED BY OWNER, RELOCATED BY CONTRACTOR. COORDINATE WITH OWNER FOR TEMPORARY LOCATION DURING CONSTRUCTION. REFER TO STAKING PLANS FOR FINAL LOCATION AFTER CONSTRUCTION.
- (V) 10' WIDE MUTLI-USE PATH PER COW STANDARDS, SEE DETAIL SHEET C7.3.
- (W) STANDARD METHOD OF ENDING CURB, SEE DETAIL SHEET C7.2.
- (X) PRE-CAST CONCRETE WHEEL STOP, SEE DETAIL SHEET C7.2.
- (Y) NO PARKING – FIRE LANE SIGNAGE, SEE DETAIL SHEET C7.2.
- (Z) BIKE RACKS, SEE DETAIL SHEET C7.2.
- (AA) ON-GRADE RAMP, SEE DETAIL SHEET C7.9.

GENERAL NOTES

1. ALL DIMENSIONS SHOWN ARE FACE OF CURB AND FACE OF BUILDING WALL, UNLESS OTHERWISE SHOWN.
2. CONTRACTOR SHALL BE RESPONSIBLE FOR FIELD VERIFICATION OF ALL DIMENSIONS SHOWN AND CONTACT THE ARCHITECT IF ANY DISCREPANCIES OCCUR.
3. CONSTRUCTION STAKE OUT IS THE RESPONSIBILITY OF THE CONTRACTOR.
4. ALL SIGNS AND PAVEMENT MARKINGS ARE TO MEET MUTCD (MANUAL ON UNIFORM TRAFFIC CONTROL DEVICES) STANDARDS.
5. PAVEMENT MARKINGS IN PUBLIC RIGHT-OF-WAYS AND FOR DRIVEWAYS ARE TO BE THERMOPLASTIC AND MEET CITY OF WILMINGTON AND/OR NCDOT STANDARDS.
6. ALL CONSTRUCTION SHALL BE IN ACCORDANCE WITH CITY OF WILMINGTON STANDARDS AND SPECIFICATIONS.
7. REPLACEMENT OF ANY BROKEN OR DAMAGED CONCRETE SIDEWALK PANELS OR CURBING THAT OCCURS DURING CONSTRUCTION IS THE RESPONSIBILITY OF THE CONTRACTOR.
8. ALL PARKING STALL RADII SHALL BE 4' UNLESS OTHERWISE NOTED.
9. PIPE GATE AT THE BUS DROP-OFF/FIRE LANE SHALL MEET THE CITY OF WILMINGTON FIRE SERVICES GATE REQUIREMENTS FOR LOCKING ARRAGEMENTS.
10. A PORTION OF THIS PROPERTY IS LOCATED IN THE 100 YEAR FLOOD ZONE AS SHOWN IN THE COMMUNITY PANEL 3701710005 C DATED NOV. 4,1997.

TRAFFIC CONTROL NOTES

1. ALL SITE SIGNAGE SHALL BE IN ACCORDANCE WITH THE MANUAL ON UNIFORM TRAFFIC CONTROL DEVICES (MUTCD) AND NCDOT STANDARDS.

SIGN	MUTCD STD.	SIZE
STOP	R1-1	30"x30"
ONE WAY	R6-1	36"x12"

2. ALL SIGNS SHALL BE MOUNTED WITH 7-FT MIN. VERTICAL CLEARANCE TO THE BOTTOM OF THE SIGN ON 2-LB. GALV. STEEL U-CHANNEL POST SET IN 3-FT DEEP x 12-IN DIA. CONCRETE FOOTING.
3. ALL PAVMENT MARKINGS SHALL BE IN ACCORDANCE WITH THE MUTCD AND NCDOT STANDARDS AND THE PROJECT SPECIFICATIONS.

MARKING	NCDOT STD.	SIZE	COLOR
PARKING SPACE	–	4-IN	WHT.
DIRECTIONAL ARROWS	1205.08	STD.	WHT.
NO PARKING – FIRE LANE *	–	4-IN	WHT.
SOLID	–	4-IN	WHT.
CROSSWALK	1205.07(HI-VIS)	24-IN	WHT.

* NO PARKING – FIRE LANE MARKING SHALL CONSIST OF A 4" SOLID WHITE STRIPE AND 8" HIGH WHITE TEXT "NO PARKING – FIRE LANE" AT 50' INTERVALS. PROVIDE IN ALL PAVED AREAS AS DESIGNATED BY FIRE MARSHALL.

4. ALL PAVEMENT MARKINGS ON SITE MAY BE EITHER THERMOPLASTIC OR ALKYD-RESIN TYPE PAINT.
5. ALL SIGNAGE SHALL BE FIELD STAKED AND THE LOCATIONS APPROVED BY CLH DESIGN PRIOR TO SIGN INSTALLATION.
6. CENTER ALL DIRECTIONAL ARROWS WITHIN TRAVEL LANE.

CITY OF WILMINGTON NOTES

1. PRIOR TO ANY CLEARING, GRADING OR CONSTRUCTION ACTIVITY, TREE PROTECTION FENCING SHALL BE INSTALLED AROUND PROTECTED TREES OR GROVES OF TREES. NO CONSTRUCTION WORKERS, TOOLS, MATERIALS OR VEHICLES ARE PERMITTED WITHIN TREE PROTECTION FENCING.

2. ANY TREES AND/OR AREAS DESIGNATED TO BE PROTECTED MUST BE PROPERLY BARRICADED WITH FENCING AND PROTECTED THROUGHOUT CONSTRUCTION TO INSURE THAT NO CLEARING, GRADING OR STAGING OF MATERIALS WILL OCCUR IN THOSE AREAS.

3. NO EQUIPMENT IS ALLOWED ON SITE UNTIL ALL TREE PROTECTION FENCING AND SILT FENCING IS INSTALLED AND APPROVED. PROTECTIVE FENCING IS TO BE MAINTAINED THROUGHOUT THE DURATION OF THE PROJECT, AND CONTRACTORS SHALL RECEIVE ADEQUATE INSTRUCTION ON TREE PROTECTION METHODS.

4. ALL PAVEMENT MARKINGS IN PUBLIC RIGHTS-OF-WAY AND FOR DRIVEWAYS ARE TO BE THERMOPLASTIC AND MEET CITY AND/OR NCDOT STANDARDS.

5. ONCE STREETS ARE OPEN TO TRAFFIC, CONTACT TRAFFIC ENGINEERING REGARDING THE INSTALLATION OF TRAFFIC AND STREET NAME SIGNS. PROPOSED STREET NAMES MUST BE APPROVED PRIOR TO INSTALLATION OF STREET NAME SIGNS.

6. TRAFFIC CONTROL DEVICES (INCLUDING SIGNS AND PAVEMENT MARKINGS) IN AREAS OPEN TO PUBLIC TRAFFIC ARE TO MEET MUTCD (MANUAL ON UNIFORM TRAFFIC CONTROL DEVICES) STANDARDS.

7. CONTACT TRAFFIC ENGINEERING AT 910.341.7888 TO ENSURE THAT ALL TRAFFIC SIGNAL FACILITIES AND EQUIPMENT ARE SHOWN ON THE PLAN.

8. CALL TRAFFIC ENGINEERING AT 910.341.7888 FORTY-EIGHT (48) HOURS PRIOR TO ANY EXCAVATION IN THE RIGHT-OF-WAY.

9. TRAFFIC ENGINEERING MUST APPROVE OF PAVEMENT MARKING PRIOR TO ACTUAL STRIPING.

10. ALL PARKING STALL MARKINGS AND LANE ARROWS WITH THE PARKING AREAS SHALL BE WHITE.

11. ALL TRAFFIC CONTROL SIGNS AND MARKINGS OFF THE RIGHT-IOF-WAY ARE TO BE MAINTAINED BY THE PROPERTY OWNER.

12. STOP SIGNS AND STREET SIGNS TO REMAIN IN PLACE DURING CONSTRUCTION.

13. TACTILE WARNING MATS WILL BE INSTALLED ON ALL WHEELCHAIR RAMPS.

14. A UTILITY CUT PERMIT IS REQUIRED FOR EACH OPEN CUT OF A CITY STREET.

15. ANY BROKEN OR MISSING SIDEWALK PANELS, DRIVEWAY PANELS & CURBING WILL BE REPLACED.

16. CONTACT TRAFFIC ENGINEERING AT 910.341.7888 TO DISCUSS STREET LIGHT OPTIONS.

17. WATER AND SEWER SERVICE SHALL MEET CAPE FEAR PUBLIC UTILITY AUTHORITY (CFPUA) DETAILS AND SPECIFICATIONS.

18. PROJECT SHALL COMPLY WITH CFPUA CROSS CONNECTION CONTROL REQUIREMENTS. WATER METER(S) CANNOT BE RELEASED UNTIL ALL REQUIREMENTS ARE MET AND THE STATE HAS GIVEN THEIR FINAL APPROVAL. CALL 910.343.3910 FOR INFORMATION.

19. IF THE CONTRACTOR DESIRED CFPUA WATER FOR CONSTRUCTION, HE SHALL APPLY IN ADVANCE FOR THIS SERVICE AND MUST PROVIDE A REDUCED PRESSURE ZONE (RPZ) BACKFLOW PREVENTION DEVICE ON THE DEVELOPER'S SIDE OF THE WATER METER BOX.

20. ANY IRRIGATION SYSTEM SUPPLIED BY CFPUA WATER SHALL COMPLY WITH THE CFPUA CROSS CONNECTION CONTROL REGULATIONS. CALL 910.343.3910 FOR INFORMATION.

21. ANY IRRIGATION SYSTEM SHALL BE EQUIPPED WITH A RAIN AND FREEZER SENSOR.

22. ANY BACKFLOW PREVENTION DEVICES REQUIRED BY CFPUA WILL NEED TO BE ON THE LIST OF APPROVED DEVICES BY USCFCCCHR OR ASSE.

23. CONTRACTOR TO FIELD VERIFY EXISTING WATER AND SEWER SERVICE LOCATIONS, SIZES AND MATERIALS PRIOR TO CONSTRUCTION. ENGINEER TO BE NOTIFIED OF ANY CONFLICTS.

24. CONTRACTOR SHALL MAINTAIN ALL-WEATHER ACCESS FOR EMERGENCY VEHICLES AT ALL TIMES DURING CONSTRUCTION.

25. UNDERGROUND FIRE LINE(S) MUST BE PERMITTED AND INSPECTED BY THE WILMINGTON FIRE DEPARTMENT FROM THE PUBLIC RIGHT-OF-WAY TO THE BUILDING. CONTACT WILMINGTON FIRE DEPARTMENT DIVISION OF FIRE AND LIFE SAFETY AT 910.341.0696.

26. NO OBSTRUCTIONS ARE PERMITTED IN THE SPACE BETWEEN THIRTY (30) INCHES AND TEN (10) FEET ABOVE THE GROUND WITHIN THE TRIANGULAR SIGHT DISTANCE.

27. CONTACT THE NORTH CAROLINA ONE CALL CENTER AT 1.800.632.4949 PRIOR TO DOING ANY DIGGING, CLEARING OR GRADING.

APPROVED CONSTRUCTION PLAN

	NAME	DATE
PLANNING		
TRAFFIC		
FIRE		

CITY OF WILMINGTON NORTH CAROLINA
Public Services • Engineering Division
APPROVED STORMWATER MANAGEMENT PLAN
Date:_____ Permit #_____
Signed: _____

GRAPHIC SCALE

30 0 15 30 60 120

(IN FEET)
1 inch = 30 ft.

BOWMAN MURRAY HEMINGWAY
ARCHITECTS
514 Market Street
Wilmington, NC 28401
Tel - (910) 762-2621
Fax - (910) 762-8506

Project ID # 900-9005

CLH DESIGN, PA
400 Regency Forest Dr.
Suite 120
Cary, NC 27518
Phone: 919.319.6716
Fax: 919.319.7516
LA: C-106 PE: C-1595

NORTH CAROLINA PROFESSIONAL SEAL LANDSCAPE ARCHITECT 1861 JAMES GLENN MEDLIN 3-14-16

Renovations and Additions to: John T. Hoggard High School

4305 Shipyard Blvd.
Wilmington, North Carolina 28403

JOB NUMBER	15-120
DRAWN BY	JGM
CHECKED BY	JGM
DATE	APRIL 1, 2016
REVISIONS	

CONSTRUCTION DOCUMENTS: 4-1-2016

SITE STAKING PLAN

SHEET NUMBER

C-1.2

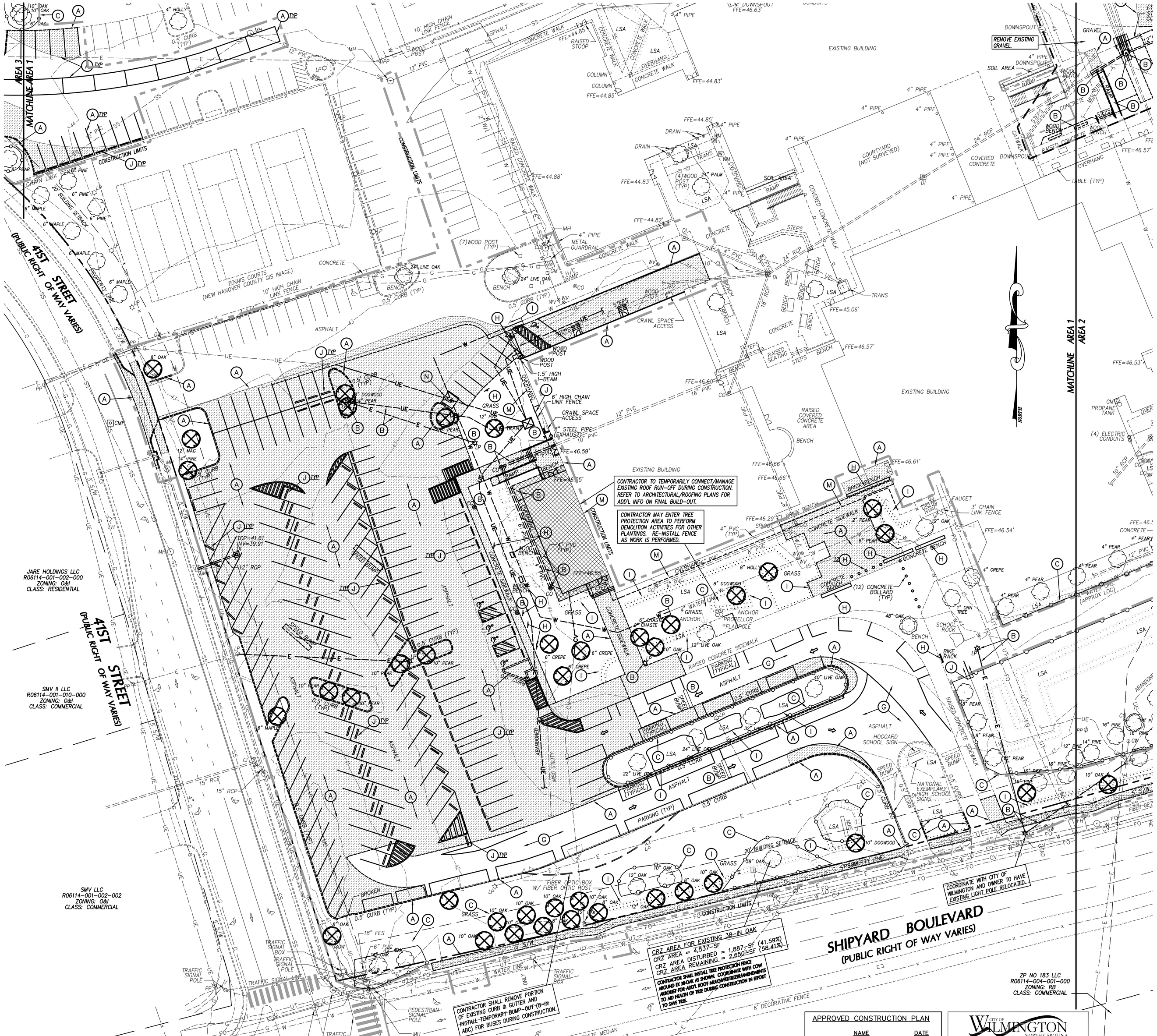

APPROVED CONSTRUCTION PLAN	
NAME	DATE
PLANNING	
TRAFFIC	
FIRE	

CITY OF WILMINGTON NORTH CAROLINA
Public Services • Engineering Division
APPROVED STORMWATER MANAGEMENT PLAN
Date: _____ Permit # _____
Signed: _____

LEGEND-STRUCTURES/UTILITIES TO REMAIN

OVERHEAD ELECTRICAL	E	LIGHT POLE	LP
UNDERGROUND ELECTRICAL	UE	UTILITY POLE	PP
FIRE PROTECTION	FP	MANHOLE	MH
GAS	G	CLEAN OUT	CO
SANITARY SEWER	SS	DROP INLET,CATCH BASIN	DI, CB
TELEPHONE	T	FIRE HYDRANT	FH
UNDERGROUND TELEPHONE	UT	WATER VALVE	WV
FIBER OPTIC	FO		
WATER	W		
FORCE MAIN	FM		
STORM DRAIN			
INDIVIDUAL TREE TO REMAIN.			

LEGEND-STRUCTURES/UTILITIES TO BE REMOVED

OVERHEAD ELECTRICAL	E	LIGHT POLE	LP
UNDERGROUND ELECTRICAL	UE	UTILITY POLE	PP
FIRE PROTECTION	FP	MANHOLE	MH
GAS	G	CLEAN OUT	CO
SANITARY SEWER	SS	DROP INLET,CATCH BASIN	DI, CB
TELEPHONE	T	FIRE HYDRANT	FH
UNDERGROUND TELEPHONE	UT	WATER VALVE	WV
FIBER OPTIC	FO	CONSTR./CLEARING LIMITS	
WATER	W	PAVEMENT, S/W, CONCRETE TO BE DEMOLISHED	
FORCE MAIN	FM		
STORM DRAIN		BUILDINGS TO BE DEMOLISHED REFER TO ARCHITECTURAL PLANS FOR ADDITIONAL INFORMATION.	
INDIVIDUAL TREE TO BE REMOVED.			

KEY NOTES

- (A) SAWCUT AND REMOVE PAVEMENT, CURB & GUTTER, AND SIDEWALK.
- (B) STRUCTURES/UTILITIES TO BE REMOVED.
- (C) TREE PROTECTION FENCING, SEE DETAIL SHEET C7.1.
- (D) CLEAR & GRUB WITHIN CONSTRUCTION LIMITS, SEE SPECIFICATIONS.
- (E) EXISTING UTILITY TO BE RELOCATED/REMOVED/ADJUSTED BY UTILITY COMPANY. COORDINATE/SCHEDULE WORK WITH UTILITY COMPANY. SEE UTILITY PLAN FOR APPROXIMATE NEW LOCATIONS.
- (F) EXISTING CONNEX/STORAGE UNIT TO BE RELOCATED BY CONTRACTOR.
- (G) MILL AREA AS REQUIRED TO RECEIVE ASPHALT OVERLAY. REFER TO STAKING PLANS FOR ADDITIONAL INFORMATION.
- (H) SITE ELEMENTS (TRASH CANS, BOLLARDS, BENCHES, SIGNS, ETC.) TO BE REMOVED.
- (I) SHRUBS/LANDSCAPING TO BE REMOVED.
- (J) CHAIN LINK FENCE TO BE REMOVED.
- (K) CONCRETE WHEEL STOP TO BE REMOVED.
- (L) PIPE GATE TO BE REMOVED.
- (M) REFER TO ARCHITECTURAL PLANS FOR REMOVAL/DEMOLITION OF ITEMS.
- (N) DUMPSTERS TO BE RELOCATED BY CONTRACTOR. COORDINATE W/ OWNER FOR TEMPORARY LOCATION DURING CONSTRUCTION. REFER TO STAKING PLAN FOR FINAL LOCATION.
- (O) SCREEN WALL TO BE REMOVED.

GENERAL NOTES

1. ALL UTILITIES OR STRUCTURES NOT INDICATED FOR REMOVAL OR MODIFICATION ARE TO REMAIN AND BE PROTECTED FROM DAMAGE.
2. ALL WASTE MATERIAL GENERATED FROM CLEARING AND DEMOLITION ACTIVITIES SHALL BE DISPOSED OF OFF-SITE IN ACCORDANCE WITH WITH ALL APPLICABLE RULES AND REGULATIONS.
3. INSTALL TREE PROTECTION FENCING PRIOR TO BEGINNING CLEARING OPERATIONS. CLEAR AND GRUB AS NEEDED WITHIN CONSTRUCTION LIMITS PER SPECIFICATIONS AND DRAWINGS. EXISTING TREES, SHRUBS OR OTHER LANDSCAPE MATERIAL WHICH WILL CONFLICT WITH NEW CONSTRUCTION SHALL BE REMOVED (WHETHER OR NOT SHOWN ON THE DRAWINGS) FOLLOWING APPROVAL OF ARCHITECT. BY SUBMITTING A BID, CONTRACTOR ACKNOWLEDGES THAT THE SITE HAS BEEN INVESTIGATED TO DETERMINE TYPE, SIZE AND QUANTITY OF CLEARING REQUIRED FOR CONSTRUCTION.
4. LAND CLEARING AND CONSTRUCTION CONTRACTORS SHALL RECEIVE ADEQUATE INSTRUCTION ON TREE PROTECTION REQUIREMENTS AND METHODS (PER CODE SECT. 18-457(D)).
5. NO EQUIPMENT IS ALLOWED ON SITE UNTIL ALL TREE PROTECTION FENCING AND SILT FECING HAS BEEN INSTALLED AND APPROVED (PER CODE SECT. 18-458).
6. NO LAND DISTURBANCE, INCLUDING TREE REMOVAL, IS TO OCCUR OUTSIDE THE LIMITS OF DISTURBANCE SHOWN (PER CODE SECT. 18-457 (B)).
7. ALL PAVEMENT OR CONCRETE TO BE REMOVED SHALL BE SAW CUT TO PROVIDE A STRAIGHT AND UNIFORM JOINT WITH NEW CONSTRUCTION. ANY EXISTING PAVEMENT, SIDEWALK, CURB & GUTTER, ETC. THAT MUST BE REMOVED TO ALLOW NEW CONSTRUCTION SHALL BE REMOVED AND REPAIRED PER THE SPECIFICATIONS AND DETAILS OR TO MATCH EXISTING CONDITIONS (WHETHER OR NOT SHOWN ON THE DRAWINGS TO BE REMOVED). UTILITY INSTALLATIONS MAY UTILIZE OPEN CUT OF PAVEMENTS UNLESS INDICATED OTHERWISE. TRENCH IN EXISTING ASPHALT SHALL BE PATCHED PER PAVEMENT REPAIR ON DETAIL SHEET.
8. PROTECT ALL ADJACENT PROPERTIES, THE GENERAL PUBLIC AND ALL OF THE OWNER'S FACILITIES. SHOULD DAMAGES OCCUR, NOTIFY ARCHITECT IMMEDIATELY.
9. THE CONTRACTOR SHALL EMPLOY A QUALIFIED UTILITY LOCATOR SERVICE TO LOCATE ALL UNDERGROUND UTILITIES (INCLUDING BUT NOT LIMITED TO ELECTRICAL, TELEPHONE, GAS, CABLE, FIBER OPTIC) WITHIN THE LIMITS OF CONSTRUCTION.
10. VERIFY ALL ILLUSTRATED KNOWN UNDERGROUND ELEMENTS. EXERCISE REASONABLE EFFORTS TO PROTECT ANY UNKNOWN UNDERGROUND ELEMENTS. NOTIFY THE ARCHITECT IMMEDIATELY IF UNKNOWN ELEMENTS ARE DISCOVERED THAT WOULD NECESSITATE MODIFICATION TO THE PROPOSED DESIGN.
11. ALL WORK SHALL BE PERFORMED IN ACCORDANCE WITH APPLICABLE LOCAL, STATE AND OSHA REGULATIONS.
12. EXISTING MANHOLES, VALVE BOXES, VAULTS, CLEANOUTS, UTILITY POLES ETC. TO REMAIN WITHIN THE GRADING LIMITS SHALL BE ADJUSTED AS NEEDED TO FUNCTION PROPERLY WITH THE PROPOSED FINISHED GRADES (WHETHER OR NOT INDICATED TO BE MODIFIED).
13. GENERAL CONTRACTOR TO COORDINATE ALL PEDESTRIAN ACCESS PATHS, LOCATIONS, LIGHTING, HANDICAP PARKING, ETC. DURING CONSTRUCTION WITH OWNER.
14. EXISTING SURVEY INFORMATION WAS TAKEN FROM A BOUNDARY AND TOPOGRAPHIC SURVEY BY MCKIM & CREED DATED 10-30-15. SURVEY PROVIDED BY OWNER.
15. ANY AND ALL LANDSCAPING AND EXISTING TREES & SHRUBS TO REMAIN WHICH ARE DAMAGED DURING DEMOLITION OR CONSTRUCTION SHALL BE REPLACED BY THE CONTRACTOR UTILIZING A LICENSED LANDSCAPE CONTRACTOR AT NO ADDITIONAL COST TO THE OWNER.
16. CONTRACTOR SHALL PROVIDE POSITIVE DRAINAGE WITHIN THE CONSTRUCTION AREA AFTER DEMOLITION IS COMPLETE. EXCAVATIONS FROM FOOTING AND UTILITY REMOVAL SHALL BE FILLED WITH STRUCTURAL MATERIAL AS DIRECTED BY THE OWNER'S TESTING AGENCY AND COMPACTED PER SPECIFICATIONS.
17. AN ALL WEATHER ACCESS ROAD MUST BE MAINTAINED AROUND CONSTRUCTION AT ALL TIMES.

GRAPHIC SCALE

30 0 15 30 60 120

(IN FEET)
1 inch = 30 ft.

BOWMAN MURRAY HEMINGWAY
ARCHITECTS
514 Market Street
Wilmington, NC 28401
Tel - (910) 762-2621
Fax - (910) 762-8506

Project ID # 900-9005

CLH DESIGN, P.A.
400 Regency Forest Dr.
Suite 120
Cary, NC 27518
Phone: 919.319.6716
Fax: 919.319.7516
LA: C-106; PE: C-1595

NORTH CAROLINA PROFESSIONAL SEAL 23953 ENGINEER KENNETH A. LORING
3-14-16

Renovations and Additions to: John T. Hoggard High School

4305 Shipyard Blvd.
Wilmington, North Carolina 28403

JOB NUMBER	15-120
DRAWN BY	JGM
CHECKED BY	JGM
DATE	APRIL 1, 2016
REVISIONS	

CONSTRUCTION DOCUMENTS: 4-1-2016

SITE EXISTING CONDITIONS & DEMO PLAN

SHEET NUMBER

C-2.1

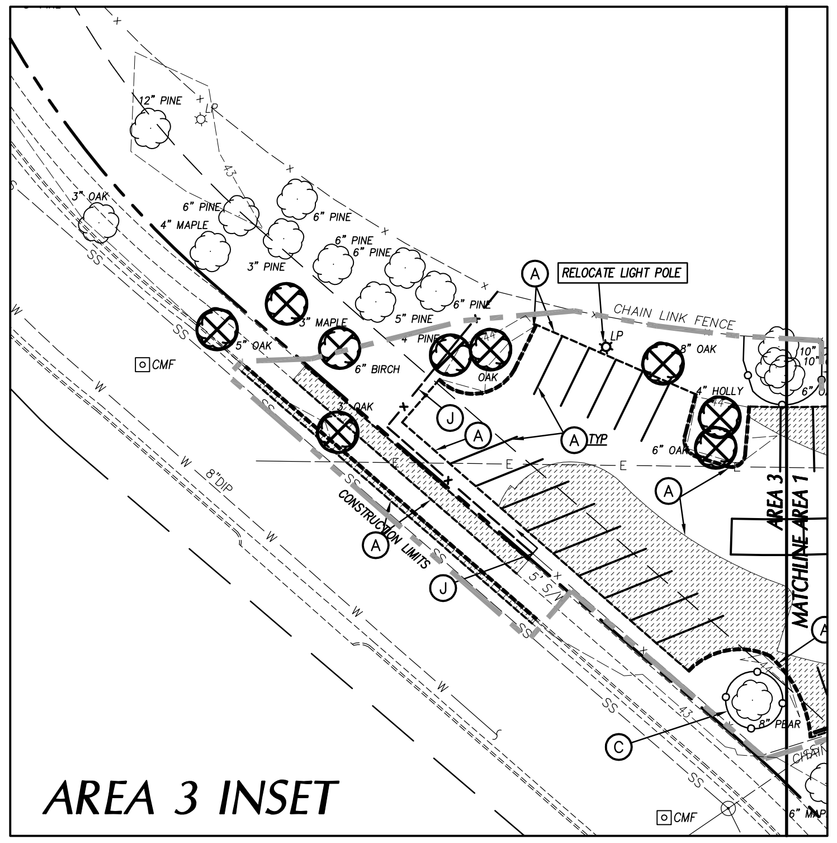

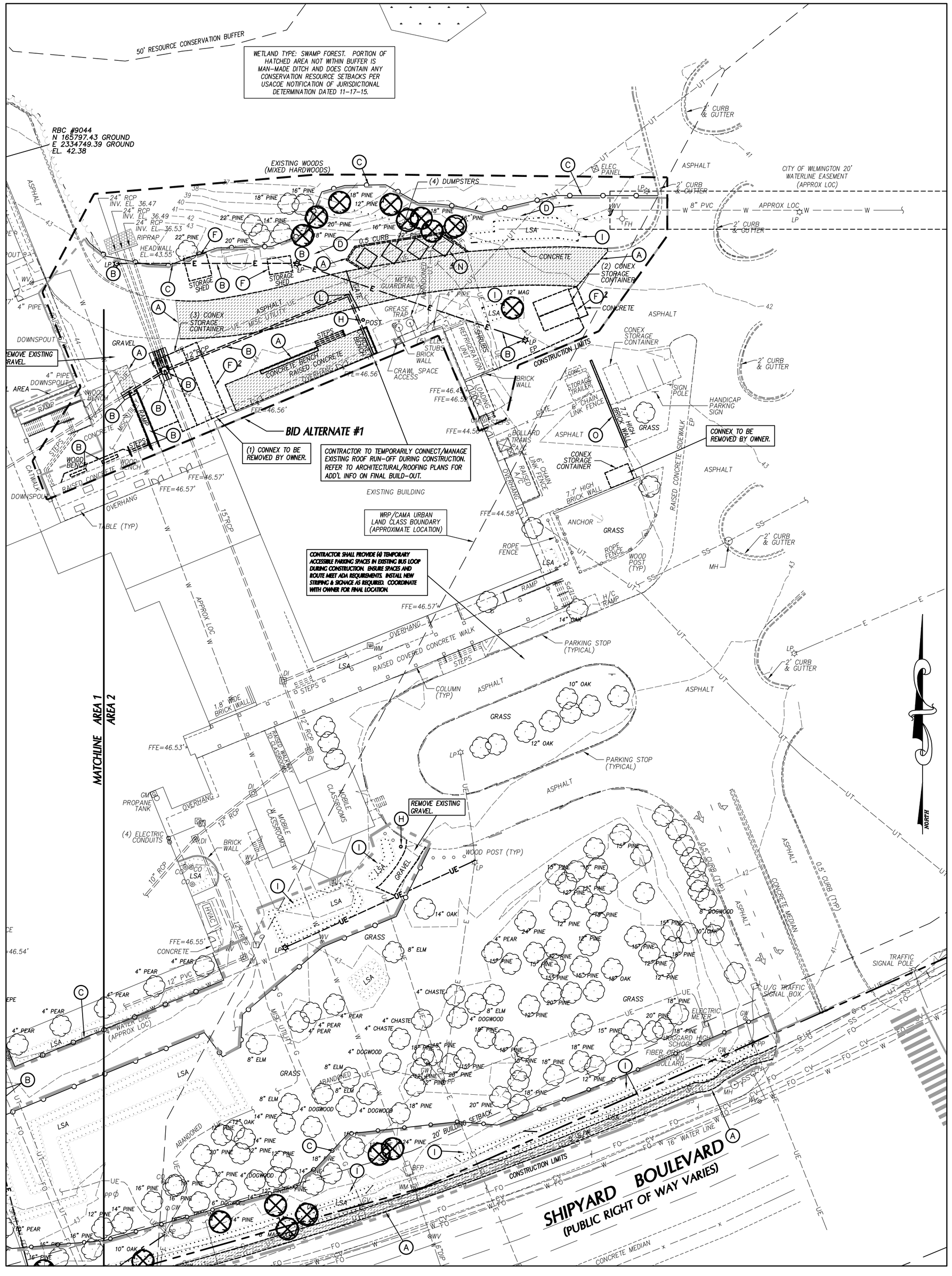

A TREE REMOVAL/PRESERVATION PERMIT IS REQUIRED PRIOR TO REMOVING ANY TREES. CONTRACTOR SHALL OBTAIN & COMPLETE PERMIT. CONTACT CITY OF WILMINGTON ZONING DEPARTMENT TO OBTAIN COPY OF PERMIT.

TEMPORARY CONSTRUCTION FENCING IS RESPONSIBILITY OF CONTRACTOR. COORDINATE WITH OWNER FOR EXACT LOCATION BASED ON SITE CONSTRUCTION LOGISTICS PLAN (TO BE DEVELOPED BY THE CONTRACTOR).

APPROVED CONSTRUCTION PLAN

	NAME	DATE
PLANNING		
TRAFFIC		
FIRE		

CITY OF WILMINGTON NORTH CAROLINA
Public Services • Engineering Division
APPROVED STORMWATER MANAGEMENT PLAN
Date: _____ Permit # _____
Signed: _____

LEGEND-STRUCTURES/UTILITIES TO REMAIN

OVERHEAD ELECTRICAL	E	LIGHT POLE	LP
UNDERGROUND ELECTRICAL	UE	UTILITY POLE	PP
FIRE PROTECTION	FP	MANHOLE	MH
GAS	G	CLEAN OUT	CO
SANITARY SEWER	SS	DROP INLET,CATCH BASIN	DI, CB
TELEPHONE	T	FIRE HYDRANT	FH
UNDERGROUND TELEPHONE	UT	WATER VALVE	WV
FIBER OPTIC	FO		
WATER	W		
FORCE MAIN	FM		
STORM DRAIN			
INDIVIDUAL TREE TO REMAIN.			

LEGEND-STRUCTURES/UTILITIES TO BE REMOVED

OVERHEAD ELECTRICAL	E	LIGHT POLE	LP
UNDERGROUND ELECTRICAL	UE	UTILITY POLE	PP
FIRE PROTECTION	FP	MANHOLE	MH
GAS	G	CLEAN OUT	CO
SANITARY SEWER	SS	DROP INLET,CATCH BASIN	DI, CB
TELEPHONE	T	FIRE HYDRANT	FH
UNDERGROUND TELEPHONE	UT	WATER VALVE	WV
FIBER OPTIC	FO	CONSTR./CLEARING LIMITS	
WATER	W	PAVEMENT, S/W, CONCRETE TO BE DEMOLISHED	
FORCE MAIN	FM		
STORM DRAIN		BUILDINGS TO BE DEMOLISHED REFER TO ARCHITECTURAL PLANS FOR ADDITIONAL INFORMATION.	
INDIVIDUAL TREE TO BE REMOVED.			

KEY NOTES

- (A) SAWCUT AND REMOVE PAVEMENT, CURB & GUTTER, AND SIDEWALK.
- (B) STRUCTURES/UTILITIES TO BE REMOVED.
- (C) TREE PROTECTION FENCING, SEE DETAIL SHEET C7.1.
- (D) CLEAR & GRUB WITHIN CONSTRUCTION LIMITS, SEE SPECIFICATIONS.
- (E) EXISTING UTILITY TO BE RELOCATED/REMOVED/ADJUSTED BY UTILITY COMPANY. COORDINATE/SCHEDULE WORK WITH UTILITY COMPANY. SEE UTILITY PLAN FOR APPROXIMATE NEW LOCATIONS.
- (F) EXISTING CONNEX/STORAGE UNIT TO BE RELOCATED BY CONTRACTOR.
- (G) MILL AREA AS REQUIRED TO RECEIVE ASPHALT OVERLAY. REFER TO STAKING PLANS FOR ADDITIONAL INFORMATION.
- (H) SITE ELEMENTS (TRASH CANS, BOLLARDS, BENCHES, SIGNS, ETC.) TO BE REMOVED.
- (I) SHRUBS/LANDSCAPING TO BE REMOVED.
- (J) CHAIN LINK FENCE TO BE REMOVED.
- (K) CONCRETE WHEEL STOP TO BE REMOVED.
- (L) PIPE GATE TO BE REMOVED.
- (M) REFER TO ARCHITECTURAL PLANS FOR REMOVAL/DEMOLITION OF ITEMS.
- (N) DUMPSTERS TO BE RELOCATED BY CONTRACTOR. COORDINATE W/ OWNER FOR TEMPORARY LOCATION DURING CONSTRUCTION. REFER TO STAKING PLAN FOR FINAL LOCATION.
- (O) SCREEN WALL TO BE REMOVED.

GENERAL NOTES

1. ALL UTILITIES OR STRUCTURES NOT INDICATED FOR REMOVAL OR MODIFICATION ARE TO REMAIN AND BE PROTECTED FROM DAMAGE.
2. ALL WASTE MATERIAL GENERATED FROM CLEARING AND DEMOLITION ACTIVITIES SHALL BE DISPOSED OF OFF-SITE IN ACCORDANCE WITH WITH ALL APPLICABLE RULES AND REGULATIONS.
3. INSTALL TREE PROTECTION FENCING PRIOR TO BEGINNING CLEARING OPERATIONS. CLEAR AND GRUB AS NEEDED WITHIN CONSTRUCTION LIMITS PER SPECIFICATIONS AND DRAWINGS. EXISTING TREES, SHRUBS OR OTHER LANDSCAPE MATERIAL WHICH WILL CONFLICT WITH NEW CONSTRUCTION SHALL BE REMOVED (WHETHER OR NOT SHOWN ON THE DRAWINGS) FOLLOWING APPROVAL OF ARCHITECT. BY SUBMITTING A BID, CONTRACTOR ACKNOWLEDGES THAT THE SITE HAS BEEN INVESTIGATED TO DETERMINE TYPE, SIZE AND QUANTITY OF CLEARING REQUIRED FOR CONSTRUCTION.
4. LAND CLEARING AND CONSTRUCTION CONTRACTORS SHALL RECEIVE ADEQUATE INSTRUCTION ON TREE PROTECTION REQUIREMENTS AND METHODS (PER CODE SECT. 18-457(D)).
5. NO EQUIPMENT IS ALLOWED ON SITE UNTIL ALL TREE PROTECTION FENCING AND SILT FECING HAS BEEN INSTALLED AND APPROVED (PER CODE SECT. 18-458).
6. NO LAND DISTURBANCE, INCLUDING TREE REMOVAL, IS TO OCCUR OUTSIDE THE LIMITS OF DISTURBANCE SHOWN (PER CODE SECT. 18-457 (B)).
7. ALL PAVEMENT OR CONCRETE TO BE REMOVED SHALL BE SAW CUT TO PROVIDE A STRAIGHT AND UNIFORM JOINT WITH NEW CONSTRUCTION. ANY EXISTING PAVEMENT, SIDEWALK, CURB & GUTTER, ETC. THAT MUST BE REMOVED TO ALLOW NEW CONSTRUCTION SHALL BE REMOVED AND REPAIRED PER THE SPECIFICATIONS AND DETAILS OR TO MATCH EXISTING CONDITIONS (WHETHER OR NOT SHOWN ON THE DRAWINGS TO BE REMOVED). UTILITY INSTALLATIONS MAY UTILIZE OPEN CUT OF PAVEMENTS UNLESS INDICATED OTHERWISE. TRENCH IN EXISTING ASPHALT SHALL BE PATCHED PER PAVEMENT REPAIR ON DETAIL SHEET.
8. PROTECT ALL ADJACENT PROPERTIES, THE GENERAL PUBLIC AND ALL OF THE OWNER'S FACILITIES. SHOULD DAMAGES OCCUR, NOTIFY ARCHITECT IMMEDIATELY.
9. THE CONTRACTOR SHALL EMPLOY A QUALIFIED UTILITY LOCATOR SERVICE TO LOCATE ALL UNDERGROUND UTILITIES (INCLUDING BUT NOT LIMITED TO ELECTRICAL, TELEPHONE, GAS, CABLE, FIBER OPTIC) WITHIN THE LIMITS OF CONSTRUCTION.
10. VERIFY ALL ILLUSTRATED KNOWN UNDERGROUND ELEMENTS. EXERCISE REASONABLE EFFORTS TO PROTECT ANY UNKNOWN UNDERGROUND ELEMENTS. NOTIFY THE ARCHITECT IMMEDIATELY IF UNKNOWN ELEMENTS ARE DISCOVERED THAT WOULD NECESSITATE MODIFICATION TO THE PROPOSED DESIGN.
11. ALL WORK SHALL BE PERFORMED IN ACCORDANCE WITH APPLICABLE LOCAL, STATE AND OSHA REGULATIONS.
12. EXISTING MANHOLES, VALVE BOXES, VAULTS, CLEANOUTS, UTILITY POLES ETC. TO REMAIN WITHIN THE GRADING LIMITS SHALL BE ADJUSTED AS NEEDED TO FUNCTION PROPERTY WITH THE PROPOSED FINISHED GRADES (WHETHER OR NOT INDICATED TO BE MODIFIED).
13. GENERAL CONTRACTOR TO COORDINATE ALL PEDESTRIAN ACCESS PATHS, LOCATIONS, LIGHTING, HANDICAP PARKING, ETC. DURING CONSTRUCTION WITH OWNER.
14. EXISTING SURVEY INFORMATION WAS TAKEN FROM A BOUNDARY AND TOPOGRAPHIC SURVEY BY MCKIM & CREED DATED 10-30-15. SURVEY PROVIDED BY OWNER.
15. ANY AND ALL LANDSCAPING AND EXISTING TREES & SHRUBS TO REMAIN WHICH ARE DAMAGED DURING DEMOLITION OR CONSTRUCTION SHALL BE REPLACED BY THE CONTRACTOR UTILIZING A LICENSED LANDSCAPE CONTRACTOR AT NO ADDITIONAL COST TO THE OWNER.
16. CONTRACTOR SHALL PROVIDE POSITIVE DRAINAGE WITHIN THE CONSTRUCTION AREA AFTER DEMOLITION IS COMPLETE. EXCAVATIONS FROM FOOTING AND UTILITY REMOVAL SHALL BE FILLED WITH STRUCTURAL MATERIAL AS DIRECTED BY THE OWNER'S TESTING AGENCY AND COMPACTED PER SPECIFICATIONS.
17. AN ALL WEATHER ACCESS ROAD MUST BE MAINTAINED AROUND CONSTRUCTION AT ALL TIMES.

GRAPHIC SCALE

30 0 15 30 60 120

(IN FEET)
1 inch = 30 ft.

BOWMAN MURRAY HEMINGWAY
ARCHITECTS
514 Market Street
Wilmington, NC 28401
Tel - (910) 762-2621
Fax - (910) 762-8506

Project ID # 900-9005

CLH DESIGN,PA
400 Regency Forest Dr.
Suite 120
Cary, NC 27518
Phone: 919.319.6716
Fax: 919.319.7516
LA: C-106; PE: C-1595

NORTH CAROLINA PROFESSIONAL SEAL 23953 ENGINEER KENNETH A. LORING
3-14-16

Renovations and Additions to: John T. Hoggard High School

4305 Shipyard Blvd.
Wilmington, North Carolina 28403

JOB NUMBER	15-120
DRAWN BY	JGM
CHECKED BY	JGM
DATE	APRIL 1, 2016
REVISIONS	

CONSTRUCTION DOCUMENTS: 4-1-2016

SITE EXISTING CONDITIONS & DEMO PLAN

SHEET NUMBER

C-2.2

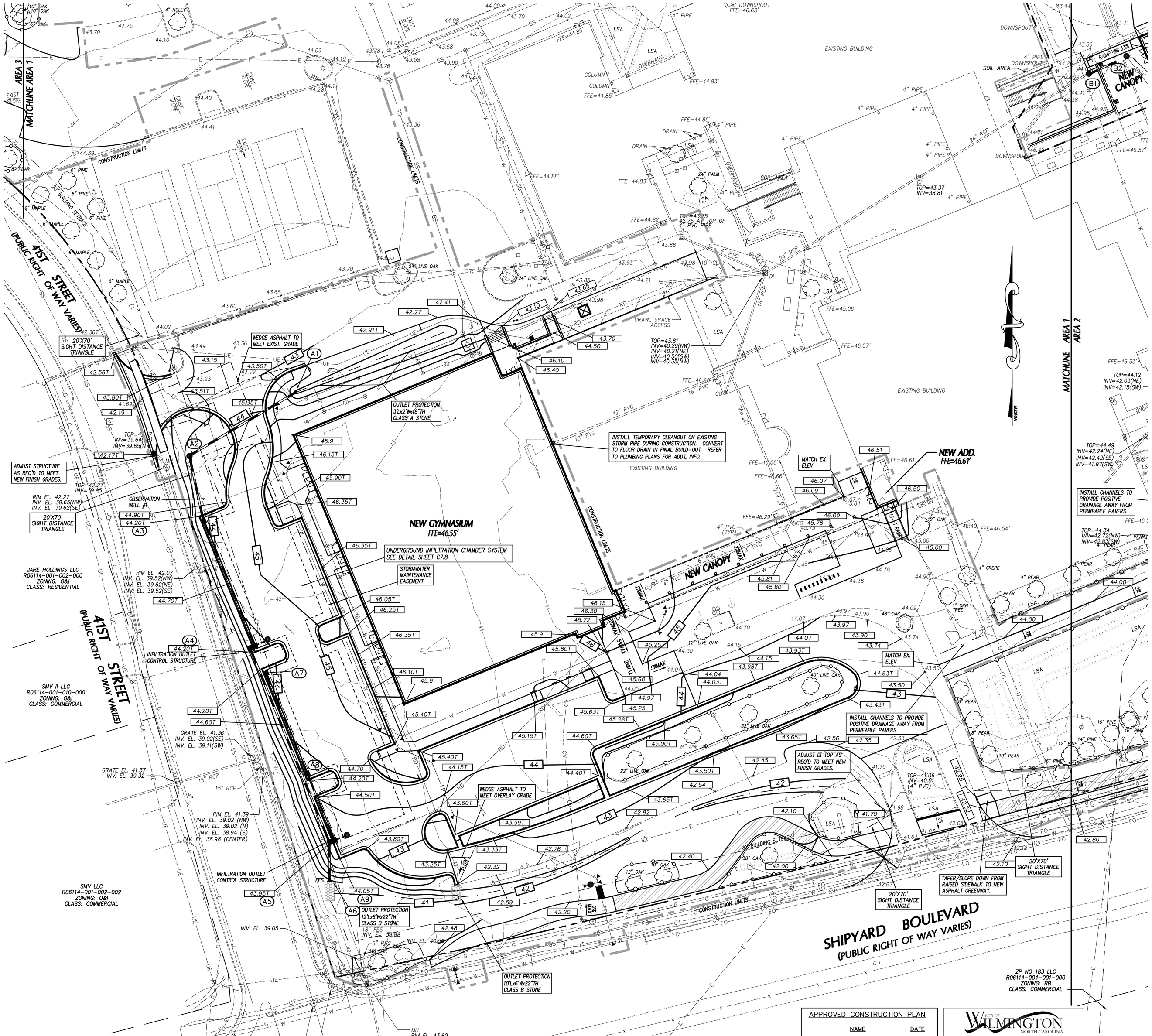

GRADING LEGEND

- EXISTING CONTOURS
- FINAL CONTOURS
- 270.4' — EXISTING SURVEY SPOT ELEVATION
- 270.50T — PROPOSED TOP OF CURB SPOT ELEVATION
- 270.50 — PROPOSED GROUND/PAVEMENT ELEVATION
- (29) — STORM STRUCTURE NUMBER
- EXISTING STORM DRAIN PIPE
- PROPOSED STORM DRAIN PIPE
- TREE PROTECTION FENCE SEE DETAIL SHEET C7.1.
- CONSTRUCTION LIMITS

GRADING NOTES

1. ALL SPOT ELEVATIONS INDICATED AT CURB AND GUTTER ARE TO TOP OF CURB, UNLESS OTHERWISE SHOWN.
2. TOTAL DENUDED AREA = 5 AC.
3. CONTRACTOR SHALL ADJUST ALL EXISTING VAULTS, MANHOLES, STORM DRAIN STRUCTURES, CLEANOUTS, ETC. AS NEEDED TO MATCH FINISH GRADE.
4. ALL BACKFILL, COMPACTION, SOILS TESTING, ETC. SHALL BE PERFORMED BY THE OWNERS INDEPENDENT TESTING LABORATORY. (SEE SPECIFICATIONS FOR ADDITIONAL INFORMATION)
5. ALL STORM DRAIN PIPES SHALL BE PROTECTED WITH STONE FILTER PROTECTION AFTER STOPPAGE OF WORK EACH DAY.
6. EXISTING VEGETATION WITHIN TREE PROTECTION AREAS SHALL REMAIN UNDISTURBED, UNLESS NOTED OTHERWISE.
7. THE GRADING CONTRACTOR SHALL COMPLY WITH ALL STATE CODES IN OBSERVING EROSION CONTROL MEASURES BOTH ON AND OFF-SITE.
8. THE GRADING CONTRACTOR SHALL MAINTAIN ALL EROSION CONTROL DEVICES AFTER EACH RAINFALL EVENT OR AS DIRECTED BY STATE AUTHORITIES OR THE ARCHITECT.
9. THE GRADING CONTRACTOR SHALL BE RESPONSIBLE FOR OFF-SITE DISPOSAL OF ALL CLEARING AND GRADING WASTE MATERIALS GENERATED DURING CONSTRUCTION AND FOR OBTAINING ALL APPLICABLE PERMITS FOR OFF-SITE STOCKPILES AND/OR WASTE AREAS.
10. ALL ROOF DRAINS SHALL BE 6" PVC (SCH 40) @ 1.04% MIN. SLOPE UNLESS NOTED OTHERWISE. ROOF DRAINS SHALL BE DIP WHEN COVER IS LESS THAN 12 INCHES. PROVIDE ALL NECESSARY FITTINGS REQUIRED FOR INSTALLATION.

DRAINAGE STRUCTURE SCHEDULE

STRUCTURE NO.		PIPE	PIPE	PIPE	PIPE	UPPER	LOWER	UPSTREAM STRUCTURE DATA			
UP STRM	DN STRM	SLOPE	DIA. (IN)	LENGTH (LF)	MATRL	INV. (FT)	INV. (FT)	TOP ELEV. (FT)(1)	DEPTH (FT)	TYPE	NOTES
A1	A2	0.75%	18	80	RCP	41.00	40.40	44.00	3.00	FES	
A2	A3	0.60%	24	42	RCP	40.30	40.05	44.50	4.20	MH	
A3	A4	0.41%	24	86	RCP	39.95	39.60	44.20	4.25	CB	
A4	A5	0.44%	24	134	RCP	39.80	39.21	44.20	4.40	CB	BMP OUTLET
A5	A6	0.42%	24	26	RCP	39.11	39.00	43.95	4.84	CB	BMP OUTLET
A7	A8	0.59%	12	68	RCP	40.50	40.10	44.20	3.70	CB	
A8	A5	0.65%	12	46	RCP	40.00	39.70	44.20	4.20	CB	
B1	B2	1.14%	24	22	RCP	37.35	37.10	44.06	6.71	MH	

LEGEND

- CB — CATCH BASIN (NCDOT), SEE DETAIL SHEET.
- DI — DROP INLET (NCDOT), SEE DETAIL SHEET.
- MH — JUNCTION BOX MANHOLE (NCDOT), SEE DETAIL SHEET.
- FES — STORMWATER WETLAND OUTLET, SEE DETAIL SHEET.
- (A2) — STRUCTURE I.D. NUMBER

NOTES:

1. TOP ELEVATION IS TOP OF CURB FOR CATCH BASINS, TOP OF RIM FOR MANOLES, TOP OF GRATE FOR DROP INLETS, AND FINISH GRADE FOR CLEANOUTS.
2. ALL FES INLETS & OUTLETS SHALL BE RCP.

APPROVED CONSTRUCTION PLAN	
NAME	DATE
PLANNING	
TRAFFIC	
FIRE	

CITY OF WILMINGTON NORTH CAROLINA
Public Services • Engineering Division
APPROVED STORMWATER MANAGEMENT PLAN
Date:_____ Permit #_____
Signed:_____

GRAPHIC SCALE
30 0 15 30 60 120
(IN FEET)
1 inch = 30 ft.

BOWMAN MURRAY HEMINGWAY
ARCHITECTS
514 Market Street
Wilmington, NC 28401
Tel - (910) 762-2621
Fax - (910) 762-8506

Project ID # 900-9005

CLH DESIGN, P.A.
400 Regency Forest Dr.
Suite 120
Cary, NC 27518
Phone: 919.319.6716
Fax: 919.319.7516
LA: C-106; PE: C-1595

NORTH CAROLINA PROFESSIONAL SEAL 23953 ENGINEER KENNETH A. LORING
3-14-16

Renovations and Additions to: John T. Hoggard High School

4305 Shipyard Blvd.
Wilmington, North Carolina 28403

JOB NUMBER	15-120
DRAWN BY	JGM
CHECKED BY	JGM
DATE	APRIL 1, 2016
REVISIONS	

CONSTRUCTION DOCUMENTS: 4-1-2016

SITE GRADING PLAN

SHEET NUMBER

C-3.1

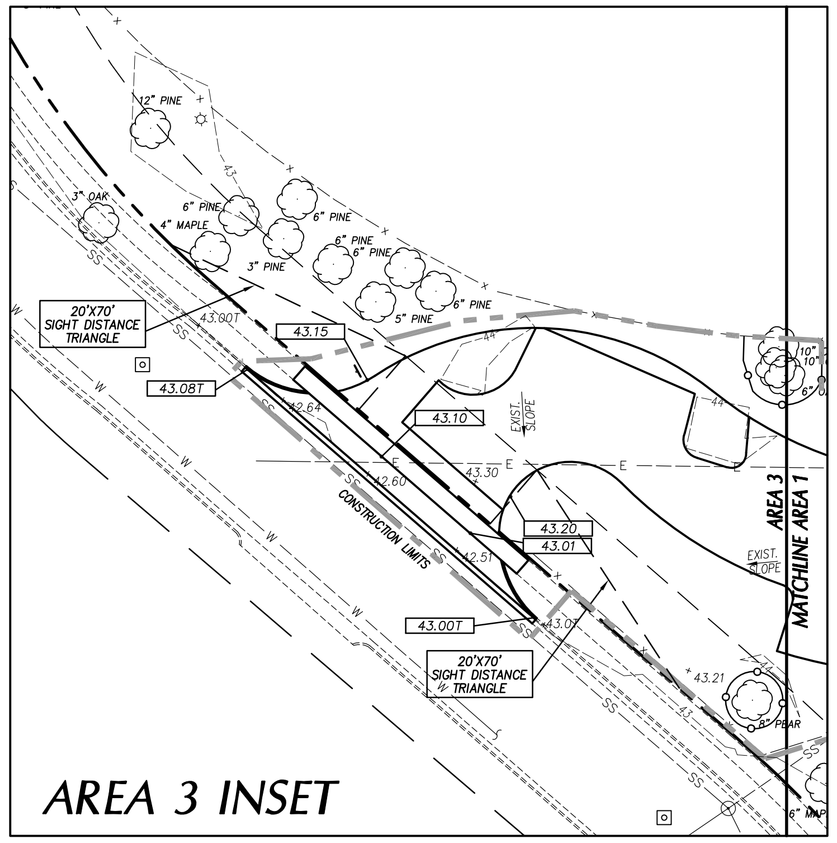

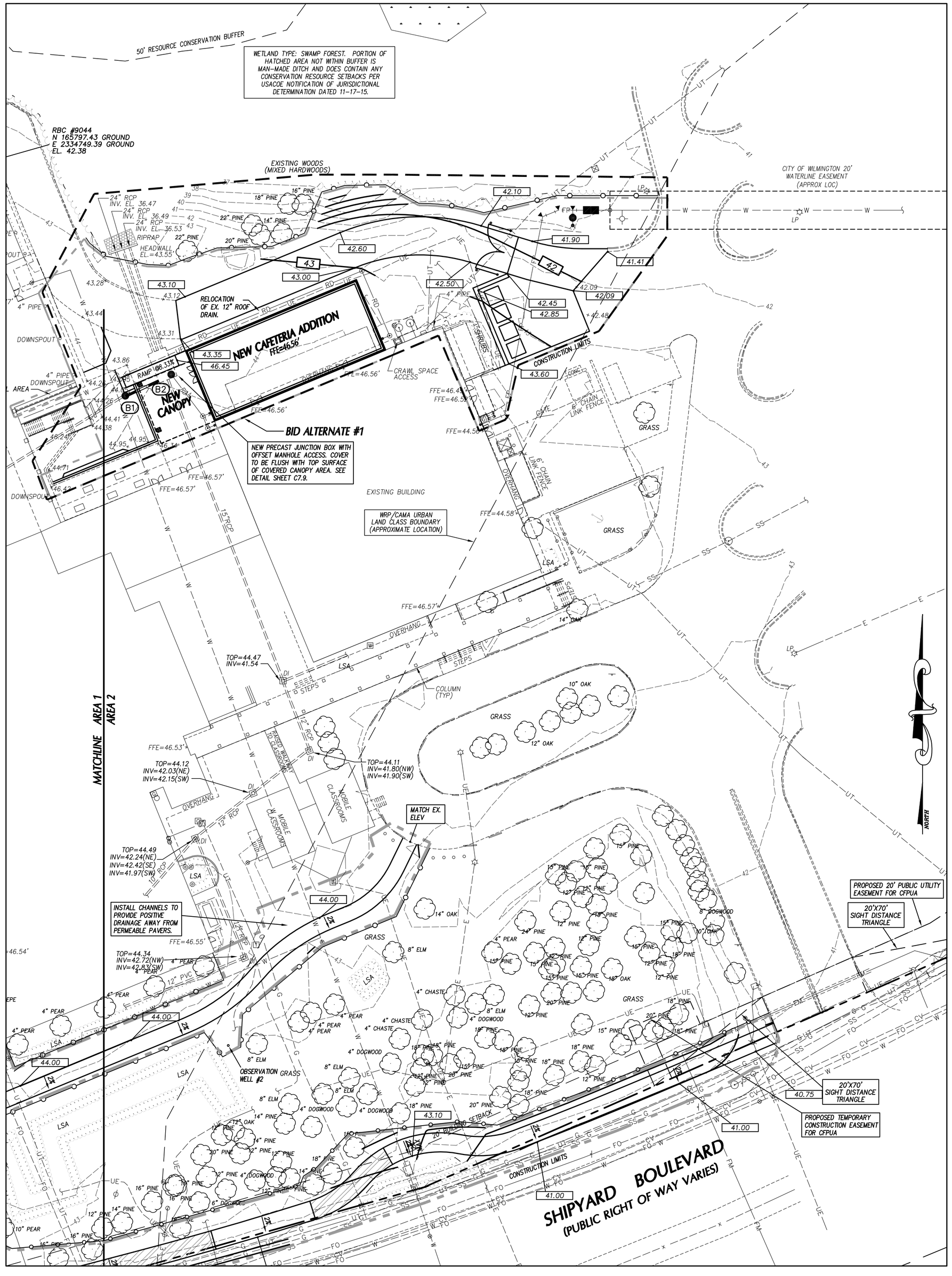

GRADING LEGEND

- EXISTING CONTOURS
- FINAL CONTOURS
- 270.4' — EXISTING SURVEY SPOT ELEVATION
- 270.50T — PROPOSED TOP OF CURB SPOT ELEVATION
- 270.50 — PROPOSED GROUND/PAVEMENT ELEVATION
- 29 — STORM STRUCTURE NUMBER
- EXISTING STORM DRAIN PIPE
- PROPOSED STORM DRAIN PIPE
- TREE PROTECTION FENCE SEE DETAIL SHEET C7.1.
- CONSTRUCTION LIMITS

GRADING NOTES

1. ALL SPOT ELEVATIONS INDICATED AT CURB AND GUTTER ARE TO TOP OF CURB, UNLESS OTHERWISE SHOWN.
2. TOTAL DENUDED AREA = 5 AC.
3. CONTRACTOR SHALL ADJUST ALL EXISTING VAULTS, MANHOLES, STORM DRAIN STRUCTURES, CLEANOUTS, ETC. AS NEEDED TO MATCH FINISH GRADE.
4. ALL BACKFILL, COMPACTION, SOILS TESTING, ETC. SHALL BE PERFORMED BY THE OWNERS INDEPENDENT TESTING LABORATORY. (SEE SPECIFICATIONS FOR ADDITIONAL INFORMATION)
5. ALL STORM DRAIN PIPES SHALL BE PROTECTED WITH STONE FILTER PROTECTION AFTER STOPPAGE OF WORK EACH DAY.
6. EXISTING VEGETATION WITHIN TREE PROTECTION AREAS SHALL REMAIN UNDISTURBED, UNLESS NOTED OTHERWISE.
7. THE GRADING CONTRACTOR SHALL COMPLY WITH ALL STATE CODES IN OBSERVING EROSION CONTROL MEASURES BOTH ON AND OFF-SITE.
8. THE GRADING CONTRACTOR SHALL MAINTAIN ALL EROSION CONTROL DEVICES AFTER EACH RAINFALL EVENT OR AS DIRECTED BY STATE AUTHORITIES OR THE ARCHITECT.
9. THE GRADING CONTRACTOR SHALL BE RESPONSIBLE FOR OFF-SITE DISPOSAL OF ALL CLEARING AND GRADING WASTE MATERIALS GENERATED DURING CONSTRUCTION AND FOR OBTAINING ALL APPLICABLE PERMITS FOR OFF-SITE STOCKPILES AND/OR WASTE AREAS.
10. ALL ROOF DRAINS SHALL BE 6" PVC (SCH 40) @ 1.04% MIN. SLOPE UNLESS NOTED OTHERWISE. ROOF DRAINS SHALL BE DIP WHEN COVER IS LESS THAN 12 INCHES. PROVIDE ALL NECESSARY FITTINGS REQUIRED FOR INSTALLATION.

DRAINAGE STRUCTURE SCHEDULE

STRUCTURE NO.		PIPE	PIPE	PIPE	PIPE	UPPER	LOWER	UPSTREAM STRUCTURE DATA			
UP STRM	DN STRM	SLOPE	DIA. (IN)	LENGTH (LF)	MATRL	INV. (FT)	INV. (FT)	TOP ELEV (FT)(1)	DEPTH (FT)	TYPE	NOTES
A1	A2	0.75%	15	80	RCP	41.00	40.40	44.00	3.00	FES	
A2	A3	0.60%	24	42	RCP	40.30	40.05	44.50	4.20	MH	
A3	A4	0.41%	24	86	RCP	39.95	39.60	44.20	4.25	CB	
A4	A5	0.44%	24	134	RCP	39.80	39.21	44.20	4.40	CB	BMP OUTLET
A5	A6	0.42%	24	25	RCP	39.11	39.00	43.95	4.84	CB	BMP OUTLET
A7	A8	0.59%	12	68	RCP	40.50	40.10	44.20	3.70	CB	
A8	A5	0.65%	12	46	RCP	40.00	39.70	44.20	4.20	CB	
B1	B2	1.14%	24	22	RCP	37.35	37.10	44.06	6.71	MH	

LEGEND

- CB — CATCH BASIN (NCDOT), SEE DETAIL SHEET.
- DI — DROP INLET (NCDOT), SEE DETAIL SHEET.
- MH — JUNCTION BOX MANHOLE (NCDOT), SEE DETAIL SHEET.
- FES — STORMWATER WETLAND OUTLET, SEE DETAIL SHEET.
- (A2) — STRUCTURE I.D. NUMBER

NOTES:

1. TOP ELEVATION IS TOP OF CURB FOR CATCH BASINS, TOP OF RIM FOR MANOLES, TOP OF GRATE FOR DROP INLETS, AND FINISH GRADE FOR CLEANOUTS.
2. ALL FES INLETS & OUTLETS SHALL BE RCP.

GRAPHIC SCALE

30 0 15 30 60 120

(IN FEET)
1 inch = 30 ft.

APPROVED CONSTRUCTION PLAN

	NAME	DATE
PLANNING		
TRAFFIC		
FIRE		

CITY OF WILMINGTON NORTH CAROLINA
Public Services • Engineering Division
APPROVED STORMWATER MANAGEMENT PLAN
Date: _____ Permit # _____
Signed: _____

BOWMAN MURRAY HEMINGWAY
ARCHITECTS
514 Market Street
Wilmington, NC 28401
Tel - (910) 762-2621
Fax - (910) 762-8506

Project ID # 900-9005

CLH DESIGN, PA
400 Regency Forest Dr.
Suite 120
Cary, NC 27518
Phone: 919.319.6716
Fax: 919.319.7516
LA C-106 PE C-1955

NORTH CAROLINA PROFESSIONAL SEAL 23953 ENGINEER KENNETH A. LORING
3-14-16

Renovations and Additions to: John T. Hoggard High School

4305 Shipyard Blvd.
Wilmington, North Carolina 28403

JOB NUMBER	15-120
DRAWN BY	JGM
CHECKED BY	JGM
DATE	APRIL 1, 2016
REVISIONS	

CONSTRUCTION DOCUMENTS: 4-1-2016

SITE GRADING PLAN

SHEET NUMBER

C-3.2

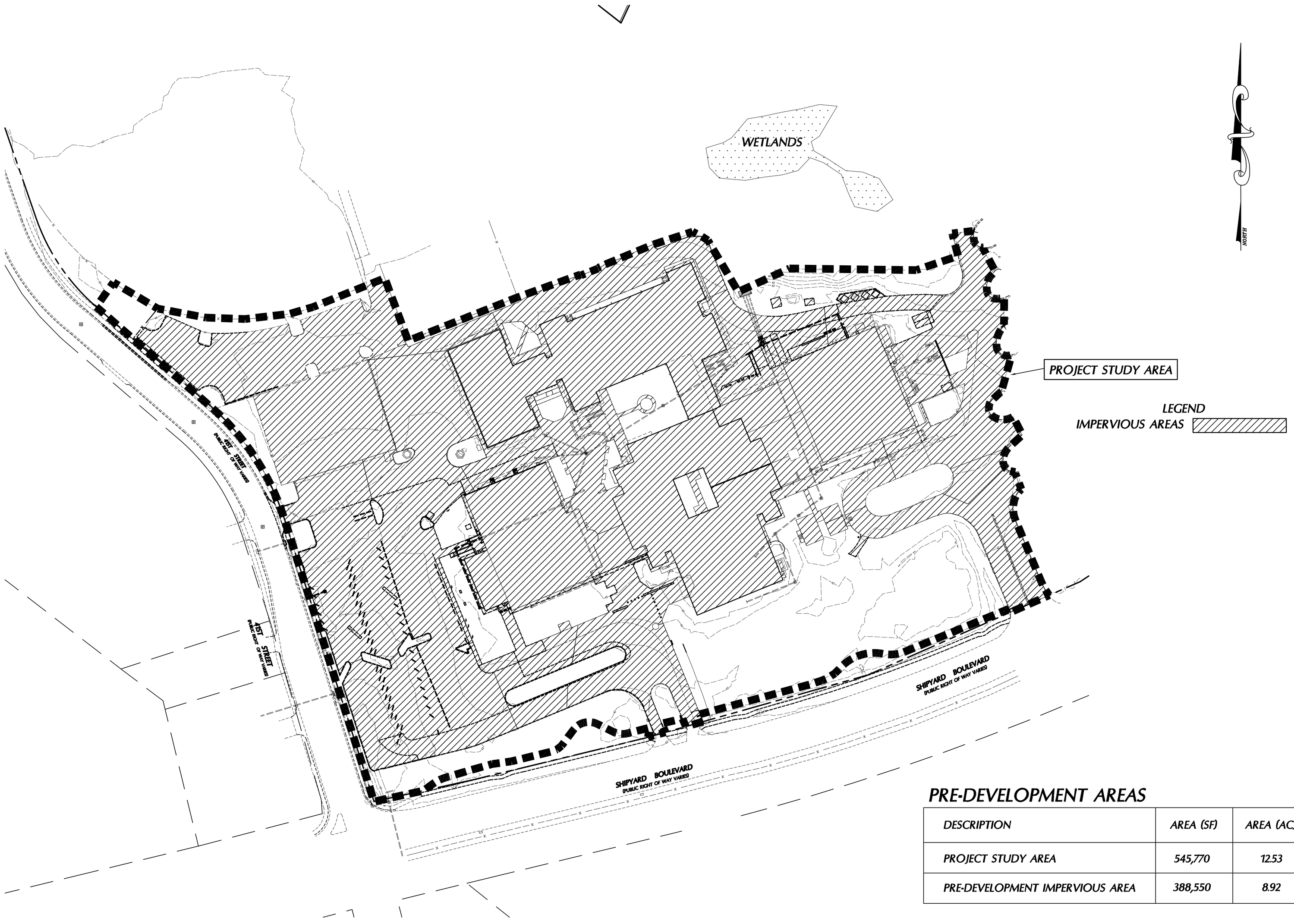

PRE-DEVELOPMENT AREAS

DESCRIPTION	AREA (SF)	AREA (AC)
PROJECT STUDY AREA	545,770	12.53
PRE-DEVELOPMENT IMPERVIOUS AREA	388,550	8.92

GRAPHIC SCALE

60 0 30 60 120 240

(IN FEET)
1 inch = 60 ft.

APPROVED CONSTRUCTION PLAN

NAME DATE

PLANNING _____

TRAFFIC _____

FIRE _____

CITY OF WILMINGTON NORTH CAROLINA
Public Services • Engineering Division
APPROVED STORMWATER MANAGEMENT PLAN
Date:_____ Permit #_____
Signed: _____

CONSTRUCTION DOCUMENTS: 4-1-2016

BOWMAN MURRAY HEMINGWAY
ARCHITECTS
514 Market Street
Wilmington, NC 28401
Tel - (910) 762-2621
Fax - (910) 762-8506

Project ID # 900-9005

CLH DESIGN, PA
400 Regency Forest Dr.
Suite 120
Cary, NC 27518
Phone: 919.319.6716
Fax: 919.319.7816
LA: C-106 PE: C-1595

NORTH CAROLINA PROFESSIONAL SEAL 23953 ENGINEER KENNETH A. LORING
3-14-16

Renovations and Additions to: John T. Hoggard High School

4305 Shipyard Blvd.
Wilmington, North Carolina 28403

JOB NUMBER 15-120
DRAWN BY JGM
CHECKED BY JGM
DATE APRIL 1, 2016
REVISIONS

PRE-DEV IMPERVIOUS AREAS PLAN

SHEET NUMBER

C-3.3

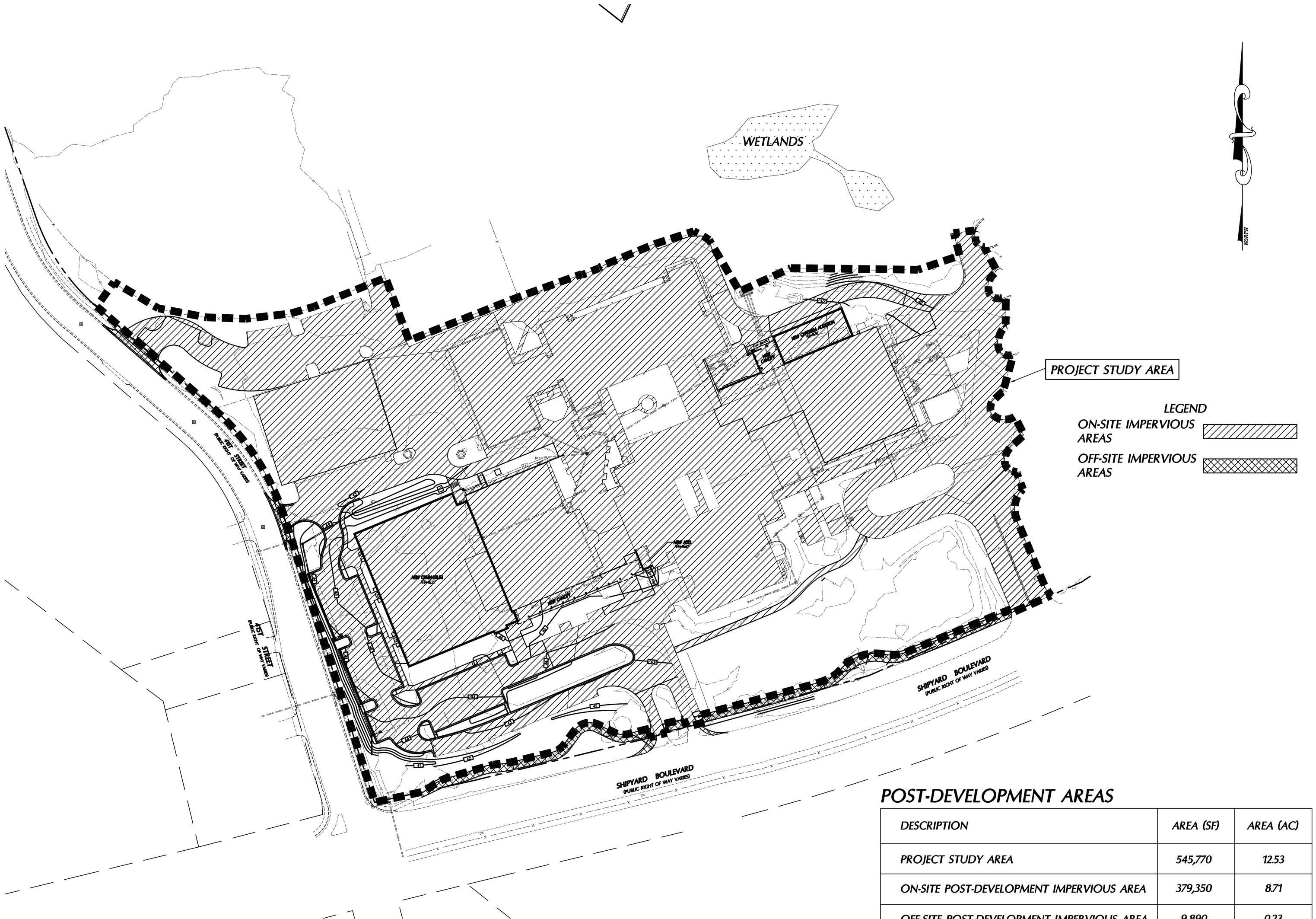

POST-DEVELOPMENT AREAS

DESCRIPTION	AREA (SF)	AREA (AC)
PROJECT STUDY AREA	545,770	12.53
ON-SITE POST-DEVELOPMENT IMPERVIOUS AREA	379,350	8.71
OFF-SITE POST-DEVELOPMENT IMPERVIOUS AREA	9,890	0.23

GRAPHIC SCALE

60 0 30 60 120 240

(IN FEET)
1 inch = 60 ft.

APPROVED CONSTRUCTION PLAN

NAME DATE

PLANNING _____

TRAFFIC _____

FIRE _____

CITY OF WILMINGTON NORTH CAROLINA

Public Services • Engineering Division

APPROVED STORMWATER MANAGEMENT PLAN

Date:_____ Permit #_____

Signed: _____

CONSTRUCTION DOCUMENTS: 4-1-2016

BOWMAN MURRAY HEMINGWAY
ARCHITECTS
514 Market Street
Wilmington, NC 28401
Tel - (910) 762-2621
Fax - (910) 762-8506

Project ID # 900-9005

CLH DESIGN, PA
400 Regency Forest Dr.
Suite 120
Cary, NC 27518
Phone: 919.319.6716
Fax: 919.319.7516
LA: C-106; PE: C-1595

NORTH CAROLINA PROFESSIONAL SEAL 23953 ENGINEER KENNETH A. LORING
3-14-16

Renovations and Additions to: John T. Hoggard High School

4305 Shipyard Blvd.
Wilmington, North Carolina 28403

JOB NUMBER 15-120

DRAWN BY JGM

CHECKED BY JGM

DATE APRIL 1, 2016

REVISIONS

POST-DEV IMPERVIOUS AREAS PLAN

SHEET NUMBER

C-3.4

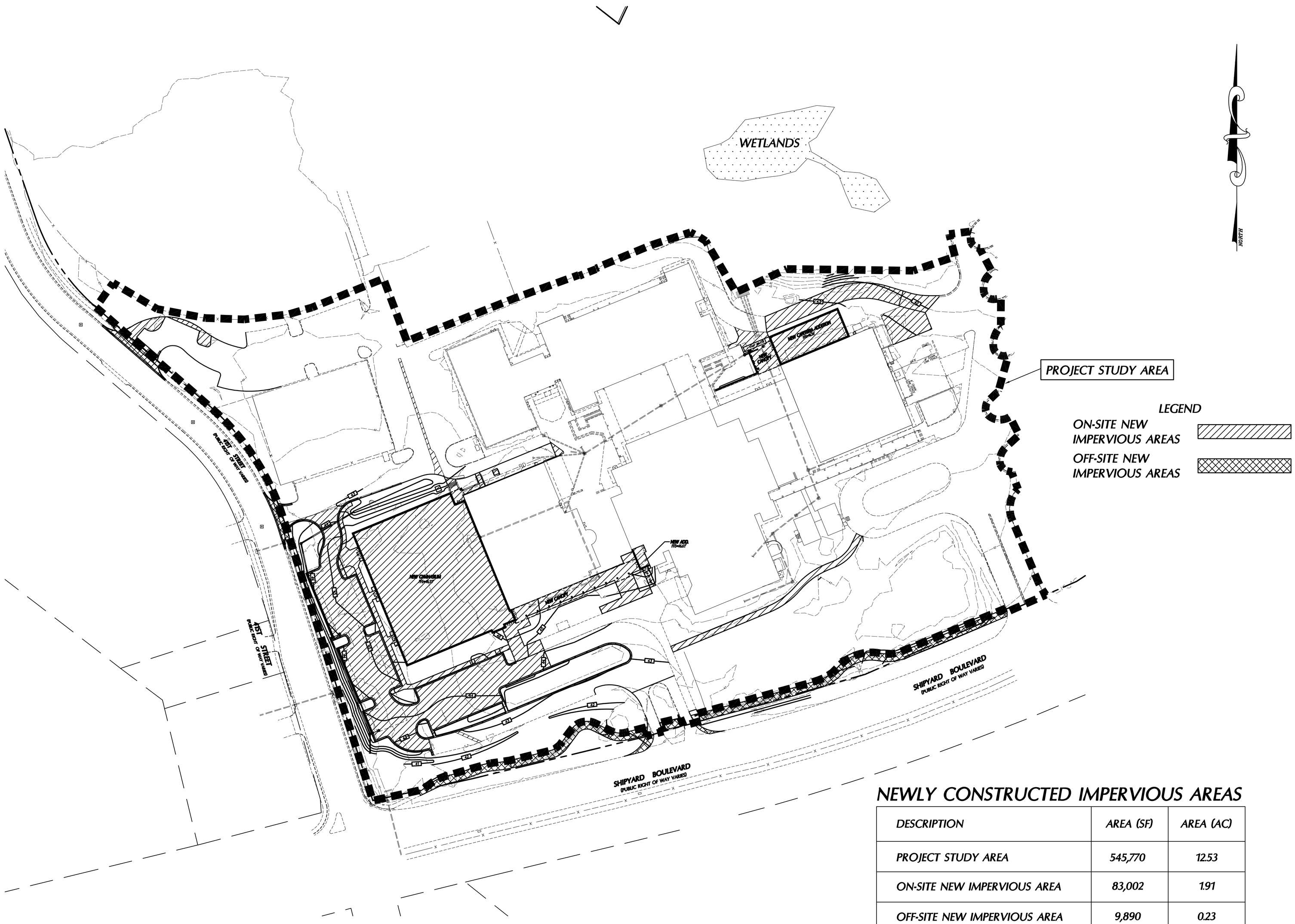

NEWLY CONSTRUCTED IMPERVIOUS AREAS

DESCRIPTION	AREA (SF)	AREA (AC)
PROJECT STUDY AREA	545,770	12.53
ON-SITE NEW IMPERVIOUS AREA	83,002	1.91
OFF-SITE NEW IMPERVIOUS AREA	9,890	0.23

GRAPHIC SCALE

60 0 30 60 120 240

(IN FEET)
1 inch = 60 ft.

APPROVED CONSTRUCTION PLAN

NAME DATE

PLANNING _____

TRAFFIC _____

FIRE _____

CITY OF WILMINGTON NORTH CAROLINA
Public Services • Engineering Division
APPROVED STORMWATER MANAGEMENT PLAN
Date:_____ Permit #_____
Signed: _____

CONSTRUCTION DOCUMENTS: 4-1-2016

BOWMAN MURRAY HEMINGWAY
ARCHITECTS
514 Market Street
Wilmington, NC 28401
Tel - (910) 762-2621
Fax - (910) 762-8506

Project ID # 900-9005

CLH DESIGN, P.A.
400 Regency Forest Dr.
Suite 120
Cary, NC 27518
Phone: 919.319.6716
Fax: 919.319.7516
LA: C-106; PE: C-1595

NORTH CAROLINA PROFESSIONAL SEAL 23953 ENGINEER KENNETH A. LORING
3-14-16

Renovations and Additions to: John T. Hoggard High School

4305 Shipyard Blvd.
Wilmington, North Carolina 28403

JOB NUMBER 15-120
DRAWN BY JGM
CHECKED BY JGM
DATE APRIL 1, 2016
REVISIONS

POST-DEV NEW IMPERVIOUS AREAS PLAN

SHEET NUMBER

C-3.5

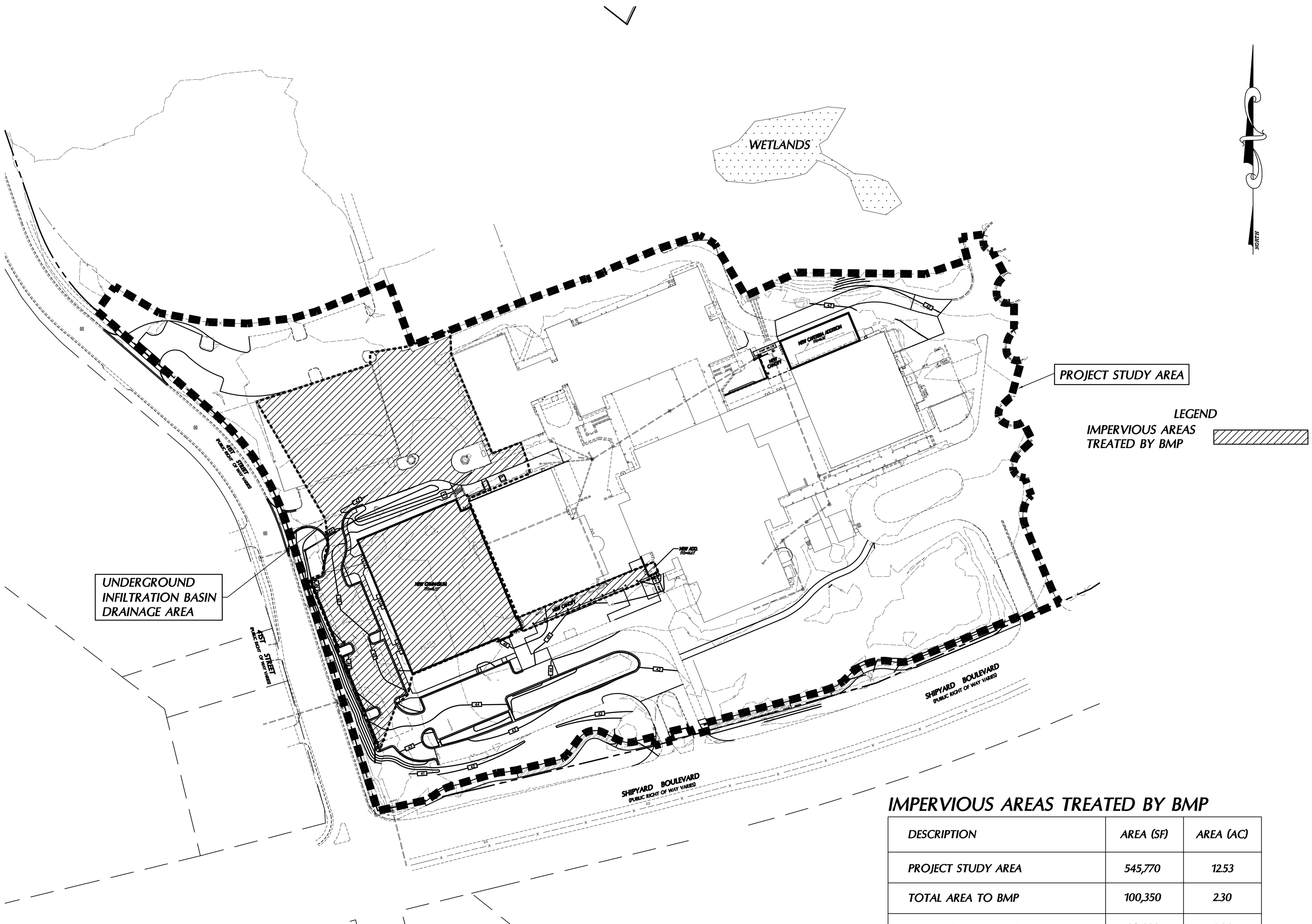

IMPERVIOUS AREAS TREATED BY BMP

DESCRIPTION	AREA (SF)	AREA (AC)
PROJECT STUDY AREA	545,770	12.53
TOTAL AREA TO BMP	100,350	2.30
IMPERVIOUS AREA TO BMP	89,680	2.06

GRAPHIC SCALE

60 0 30 60 120 240

(IN FEET)
1 inch = 60 ft.

APPROVED CONSTRUCTION PLAN

	NAME	DATE
PLANNING		
TRAFFIC		
FIRE		

CITY OF WILMINGTON NORTH CAROLINA
Public Services • Engineering Division
APPROVED STORMWATER MANAGEMENT PLAN
Date:_____ Permit #_____
Signed: _____

CONSTRUCTION DOCUMENTS: 4-1-2016

BOWMAN MURRAY HEMINGWAY
ARCHITECTS
514 Market Street
Wilmington, NC 28401
Tel - (910) 762-2621
Fax - (910) 762-8506

Project ID # 900-9005

CLH DESIGN, P.A.
400 Regency Forest Dr.
Suite 120
Cary, NC 27518
Phone: 919.319.6716
Fax: 919.319.7516
LA: C-106; PE: C-1595

NORTH CAROLINA PROFESSIONAL SEAL 23953 ENGINEER KENNETH A. LORING
3-14-16

Renovations and Additions to: John T. Hoggard High School

4305 Shipyard Blvd.
Wilmington, North Carolina 28403

JOB NUMBER 15-120
DRAWN BY JGM
CHECKED BY JGM
DATE APRIL 1, 2016
REVISIONS

BMP DRAINAGE AREAS PLAN

SHEET NUMBER

C-3.6

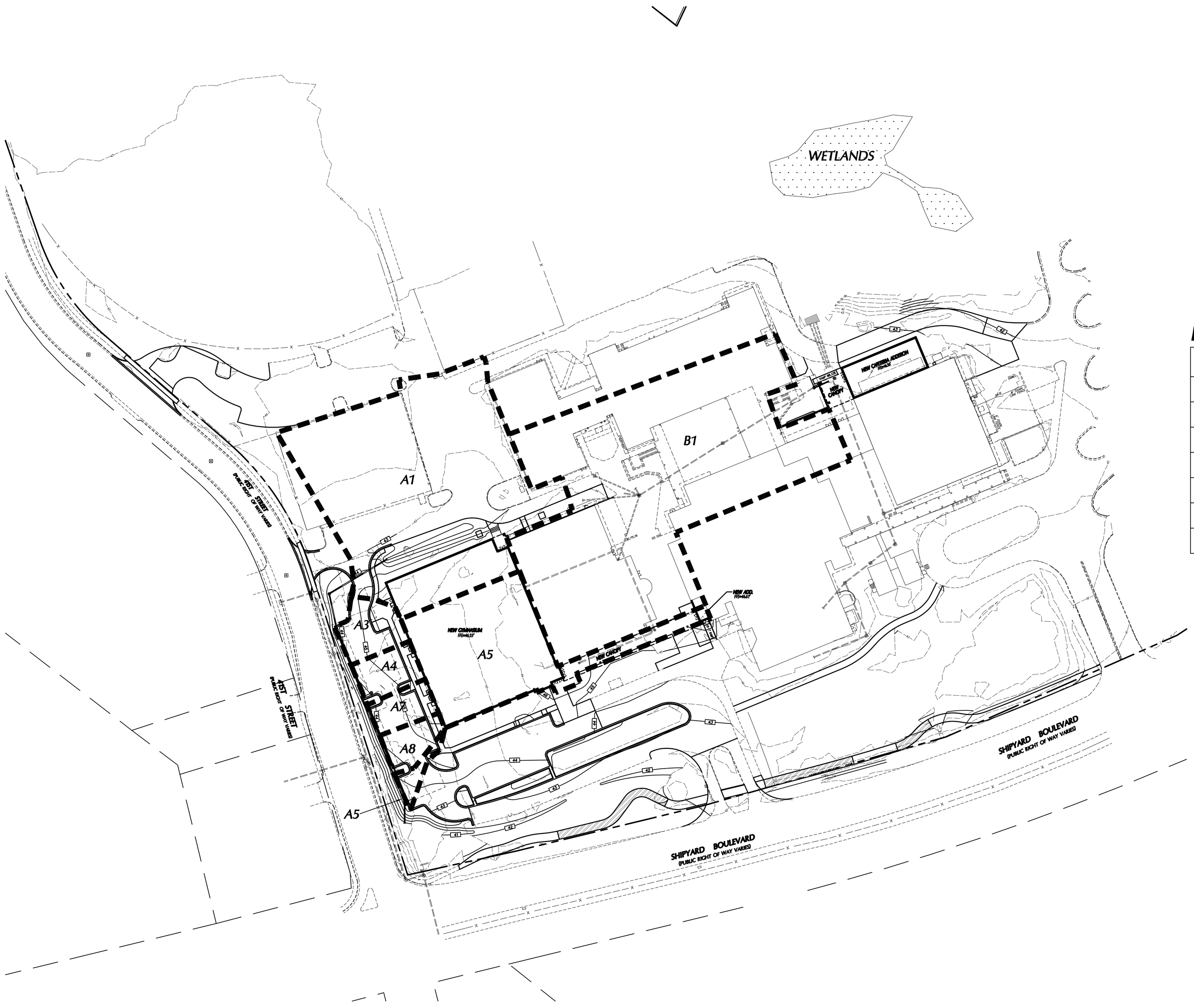

DRAINAGE AREAS TO INLETS

INLET NO.	AREA (SF)	AREA (AC)
A1	59,930	1.38
A3	4,480	0.10
A4	3,790	0.09
A7	3,100	0.07
A8	3,030	0.07
A5	25,960	0.60
B1	80,050	1.84

GRAPHIC SCALE

60 0 30 60 120 240

(IN FEET)
1 inch = 60 ft.

APPROVED CONSTRUCTION PLAN

NAME DATE

PLANNING _____

TRAFFIC _____

FIRE _____

CITY OF WILMINGTON NORTH CAROLINA

Public Services • Engineering Division

APPROVED STORMWATER MANAGEMENT PLAN

Date:_____ Permit #_____

Signed: _____

CONSTRUCTION DOCUMENTS: 4-1-2016

BOWMAN MURRAY HEMINGWAY
ARCHITECTS
514 Market Street
Wilmington, NC 28401
Tel - (910) 762-2621
Fax - (910) 762-8506

Project ID # 900-9005

CLH DESIGN, P.A.
400 Regency Forest Dr.
Suite 120
Cary, NC 27518
Phone: 919.319.6716
Fax: 919.319.7516
LA: C-106; PE: C-1595

NORTH CAROLINA PROFESSIONAL SEAL 23953 ENGINEER KENNETH A. LORING
3-14-16

Renovations and Additions to: John T. Hoggard High School

4305 Shipyard Blvd.
Wilmington, North Carolina 28403

JOB NUMBER
15-120

DRAWN BY
JGM

CHECKED BY
JGM

DATE
APRIL 1, 2016

REVISIONS

STORM DRAINAGE AREAS PLAN

SHEET NUMBER

C-3.7

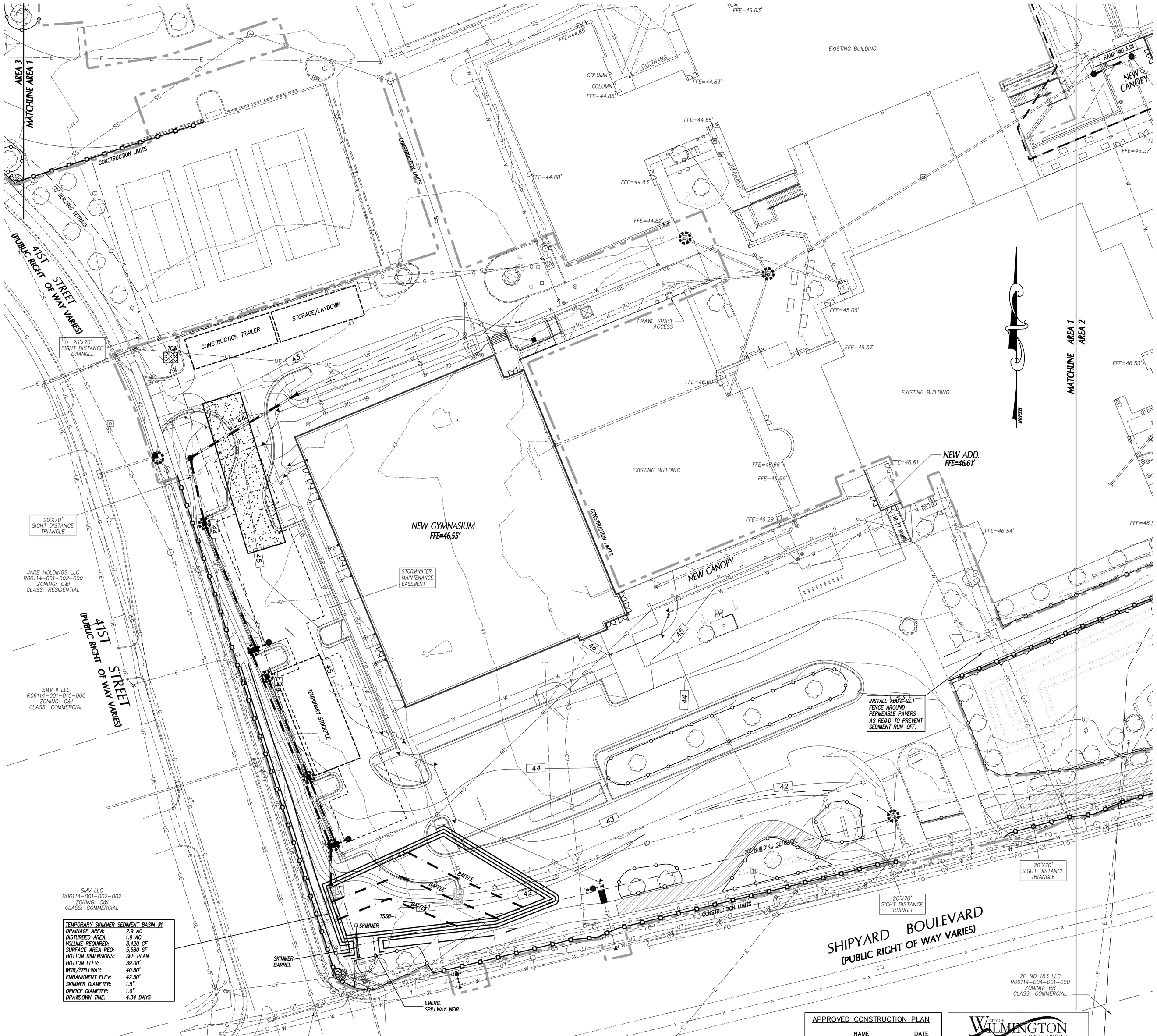

LEGEND

- GRAVEL CONSTR. ENTRANCE SEE DETAIL SHEET C7.1.
- TEMP. INLET PROTECTION DEVICE SEE DETAIL SHEET C7.1.
- TEMPORARY SILT FENCE SEE DETAIL SHEET C7.1.
- REINFORCED SILT FENCE OUTLET SEE DETAIL SHEET C7.1.
- PERMANENT OUTLET PROTECTION SEE DETAIL SHEET C7.1.
- TCW — TEMPORARY CONCRETE WASHOUT AREA, SEE DETAIL SHEET C7.1.
- TEMPORARY SEDIMENT SKIMMER BASIN. SEE DETAIL SHEET C7.9
- CONSTRUCTION LIMITS UNLESS OTHERWISE NOTED.
- PROPOSED STORM SEWER PIPES
- EXISTING STORM SEWER PIPES
- EXISTING CONTOUR
- FINISHED CONTOUR
- TEMPORARY CONTOUR (TEMP. GRADES DURING CONSTR.)

GENERAL NOTES

1. ALL CONSTRUCTION SHALL BE IN ACCORDANCE WITH ALL CITY OF WILMINGTON AND NCDOT STANDARDS, SPECIFICATIONS AND DETAILS.
2. THE CONTRACTOR SHALL COMPLY WITH ALL STATE AND LOCAL CODES IN OBSERVING EROSION CONTROL MEASURES BOTH ON AND OFF SITE. ALL OFF-SITE SOIL BORROW AND WASTE SITES SHALL BE PROPERLY PERMITTED FOR SUCH ACTIVITIES. CONTRACTOR SHALL PROVIDE WRITTEN DOCUMENTATION OF SEDIMENT & EROSION CONTROL PERMIT FOR ANY OFF-SITE SITES TO OWNER.
3. THE CONTRACTOR SHALL MAINTAIN ALL EROSION CONTROL DEVICES AFTER EACH RAINFALL EVENT OR AS DIRECTED BY LOCAL AUTHORITIES OR ARCHITECT.
4. TOTAL DISTURBED AREA: 5 AC.
5. ALL OPEN STORM PIPES SHALL BE PROTECTED WITH STONE FILTER PROTECTION AFTER WORK STOPPAGE EACH DAY. SEE DETAIL SHEET.
6. ALL STORM DRAINAGE PIPES SHALL BE THOROUGHLY FLUSHED OF ALL SEDIMENT FOLLOWING SITE STABILIZATION. INTERIOR FLUSHING OF SYSTEM SHALL BE PERFORMED AS NEEDED TO MAINTAIN PROPER FUNCTIONING OF THE DRAINAGE SYSTEM.
7. THE INDICATED STAGING AREA IS INTENDED FOR VEHICLES AND NON-ERODIBLE MATERIALS ONLY. NO SOIL, SAND OR OTHER ERODIBLE, FINE GRAINED MATERIAL SHALL BE STORED OUTSIDE OF THE LIMITS OF THE SITE PROTECTED BY SEDIMENT AND EROSION CONTROL DEVICES AND MEASURES.
8. SOIL AND OTHER MATERIALS SHALL ONLY BE TEMPORARILY STOCKPILED WITHIN THE CONSTRUCTION LIMITS PROTECTED BY SEDIMENT AND EROSION CONTROL DEVICES AND MEASURES. STOCKPILES SHALL BE STABILIZED AS REQUIRED AS INDICATED IN THE SLOPE & SURFACE STABILIZATION NOTES ON THIS PLAN.
9. TREE PROTECTION CERTIFICATION MUST BE SUBMITTED TO THE TOWN OF CARY PLANNING DEPARTMENT AND TREE PROTECTION INSPECTION COMPLETED PRIOR TO EROSION CONTROL PERMIT ISSUANCE.
10. ROADSIDE DITCHES AND CHANNELS SHALL BE STABILIZED DAILY UNTIL PERMANENT GROUND COVER IS ESTABLISHED.

SLOPE & SURFACE STABILIZATION

GROUND STABILIZATION SHALL BE PROVIDED ON ALL DISTURBED AREAS ACCORDING TO FOLLOWING SCHEDULE:

GROUND STABILIZATION

SITE AREA DESCRIPTION	STABILIZATION TIME FRAME	STABILIZATION TIME FRAME EXCEPTIONS
PERIMETER DIKES, SWALES, DITCHES AND SLOPES	7 DAYS	NONE
HIGH QUALITY WATER (HQW) ZONES	7 DAYS	NONE
SLOPES STEEPER THAN 3:1	7 DAYS	IF SLOPES ARE 10' OR LESS IN LENGTH AND ARE NOT STEEPER THAN 2:1, 14 DAYS ARE ALLOWED.
SLOPES 3:1 OR FLATTER	14 DAYS	7-DAYS FOR SLOPES GREATER THAN 50 FEET IN LENGTH.
ALL OTHER AREAS WITH SLOPES FLATTER THAN 4:1	14 DAYS	NONE (EXCEPT FOR PERIMETERS AND HQW ZONES).

EXTENSIONS OF TIME MAY BE APPROVED BY THE PERMITTING AUTHORITY BASED ON WEATHER OR OTHER SITE-SPECIFIC CONDITIONS THAT MAKE COMPLIANCE IMPRACTICABLE (SECTION 6.B(2) (b))

THE ABOVE REQUIREMENTS ARE THE MINIMUM NECESSARY TO MEET EROSION AND SEDIMENT CONTROL REGULATIONS. THE CONTRACT DOCUMENTS INCLUDE ADDITIONAL SEEDING AND STABILIZATION REQUIREMENTS AND SCHEDULES WHICH MAY EXCEED THOSE ABOVE.

INSTALL TEMPORARY SLOPE EROSION CONTROL EXCELSIOR MATTING FOR STABILIZATION DURING THE ESTABLISHMENT OF VEGETATIVE COVER ON ALL STEEP SLOPES (6:1 OR STEEPER). UTILIZE TEMPORARY COCONUT MAT IN AREAS IDENTIFIED ON PLAN. REFER TO SPECIFICATION SECTION 312500 FOR MATERIAL SPECIFICATIONS. INSTALL MATTING PER MANUFACTURER'S INSTRUCTIONS.

MAINTENANCE PLAN

1. DURING ALL PHASES OF CONSTRUCTION, GROUNDCOVER ON EXPOSED SLOPES SHALL BE PROVIDED ACCORDING TO GROUND STABILIZATION TABLE (BELOW) FOLLOWING COMPLETION OF ANY PHASE OF GRADING.
2. FINAL PERMANENT GROUNDCOVER FOR ALL DISTURBED AREAS SHALL BE PROVIDED ON ALL DISTURBED AREAS ACCORDING TO GROUND STABILIZATION TABLE (BELOW) FOLLOWING COMPLETION OF CONSTRUCTION OR DEVELOPMENT.
3. THE ABOVE REQUIREMENTS ARE THE MINIMUM NECESSARY TO MEET EROSION AND SEDIMENT CONTROL REGULATIONS. THE CONTRACT DOCUMENTS INCLUDE ADDITIONAL SEEDING AND STABILIZATION REQUIREMENTS AND SCHEDULES WHICH MAY EXCEED THOSE ABOVE.
4. SLOPE EROSION CONTROL MATTING SHALL BE INSTALLED FOR TEMPORARY STABILIZATION DURING THE ESTABLISHMENT OF VEGETATIVE COVER ON ALL STEEP SLOPES (6:1 OR STEEPER). REFER TO MATERIAL SPECIFICATIONS. INSTALL MATTING PER MANUFACTURER'S INSTRUCTIONS.
5. ALL OTHER SEEDED AREAS SHALL BE MULCHED WITH STRAW AND TACKED WITH ASPHALT.

SELF-INSPECTION RULES

1. SELF-INSPECTION SHALL BE CONDUCTED AFTER EACH PHASE OF THE PROJECT, AND CONTINUED UNTIL PERMANENT GROUND COVER IS ESTABLISHED.
2. THE FINANCIALLY RESPONSIBLE PERSON AND/OR HIS AGENT WILL BE PERFORM SELF INSPECTIONS OF THE EROSION AND SEDIMENTATION CONTROL MEASURES USING NCDENR'S SELF INSPECTION REPORT (WORKSHEET) AND THIS WILL BE KEPT ONSITE.
3. NOTIFICATION OF LAND RESOURCES SEDIMENT AND EROSION CONTROL SELF-INSPECTION PROGRAM: THE SEDIMENTATION POLLUTION CONTROL ACT WAS AMENDED IN 2006 TO REQUIRE THAT PERSONS RESPONSIBLE FOR LAND DISTURBING ACTIVITIES INSPECT A PROJECT AFTER EACH PHASE OF THE PROJECT TO MAKE SURE THAT THE APPROVED EROSION AND SEDIMENTATION CONTROL PLAN IS BEING FOLLOWED. RULES DETAILING THE DOCUMENTATION OF THESE INSPECTIONS TOOK EFFECT OCTOBER 1, 2010. THE SELF-INSPECTION PROGRAM IS SEPARATE FROM THE MEDIUM SELF-MONITORING PROGRAM OF THE NPDES STORMWATER PERMIT FOR CONSTRUCTION ACTIVITIES. THE FOCUS OF THE SELF-INSPECTION REPORT IS THE INSTALLATION AND MAINTENANCE OF EROSION AND SEDIMENTATION CONTROL MEASURES ACCORDING TO THE APPROVED PLAN. THE INSPECTIONS MUST BE CONDUCTED AFTER EACH PHASE OF THE PROJECT, AND CONTINUED UNTIL PERMANENT GROUND COVER IS ESTABLISHED IN ACCORDANCE WITH NCGS 113A-54.1 AND 15A NCAC 4B.0131. THE SELF-INSPECTING REPORT FORM IS AVAILABLE AS AN EXCEL SPREADSHEET FROM http://portal.ncdenr.org/web/lr/erosion. IF YOU HAVE QUESTIONS OR CANNOT ACCESS THE FORM, PLEASE CONTACT NCDENR OFFICE AT 919-791-4200.

NOTE EROSION CONTROL PLANS WILL BE REVIEWED, PERMITTED & INSPECTED BY NCDENR, NOT CITY OF WILMINGTON

REFER TO PLAN SHEET C-4.2 FOR CONSTRUCTION SEQUENCE

APPROVED CONSTRUCTION PLAN

	NAME	DATE
PLANNING		
TRAFFIC		
FIRE		

CITY OF WILMINGTON NORTH CAROLINA
Public Services • Engineering Division
APPROVED STORMWATER MANAGEMENT PLAN
Date:_____ Permit #_____
Signed: _____

GRAPHIC SCALE
30 0 15 30 60 120
(IN FEET)
1 inch = 30 ft.

BOWMAN MURRAY HEMINGWAY
ARCHITECTS
514 Market Street
Wilmington, NC 28401
Tel - (910) 762-2621
Fax - (910) 762-8506

Project ID # 900-9005

CLH DESIGN, P.A.
400 Regency Forest Dr.
Suite 120
Cary, NC 27518
Phone: 919.319.6716
Fax: 919.319.7516
LA: C-106; PE: C-1995

NORTH CAROLINA PROFESSIONAL SEAL 23953 ENGINEER KENNETH A. LORING
3-14-16

Renovations and Additions to: John T. Hoggard High School

4305 Shipyard Blvd.
Wilmington, North Carolina 28403

JOB NUMBER	15-120
DRAWN BY	JGM
CHECKED BY	JGM
DATE	APRIL 1, 2016
REVISIONS	

CONSTRUCTION DOCUMENTS: 4-1-2016

SITE EROSION CONTROL PLAN

SHEET NUMBER

C-4.1

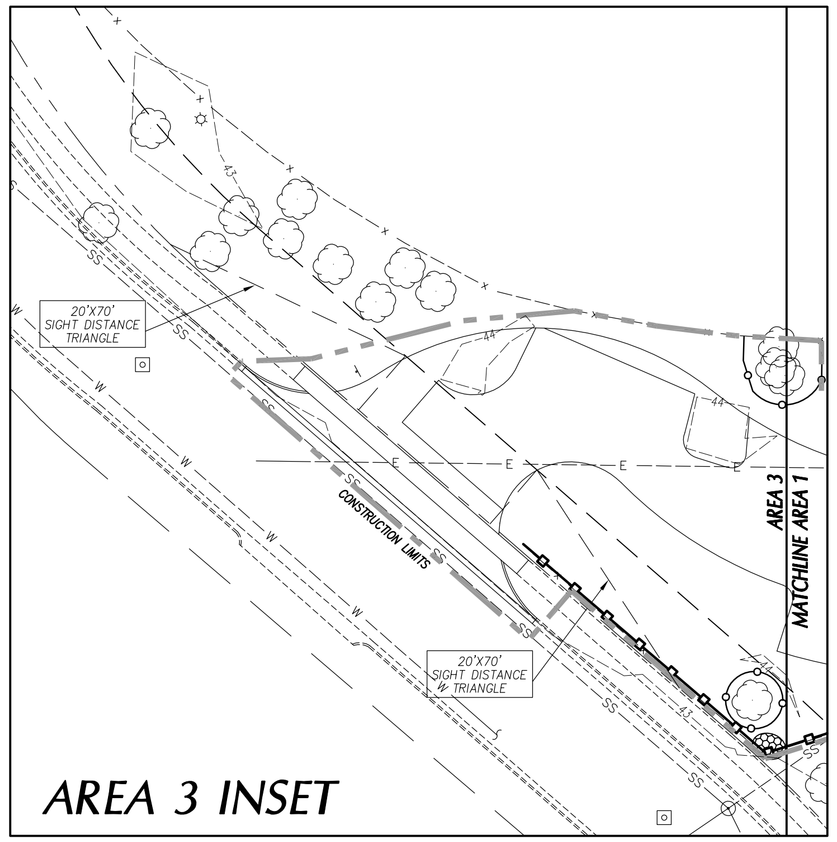

AREA 3 INSET

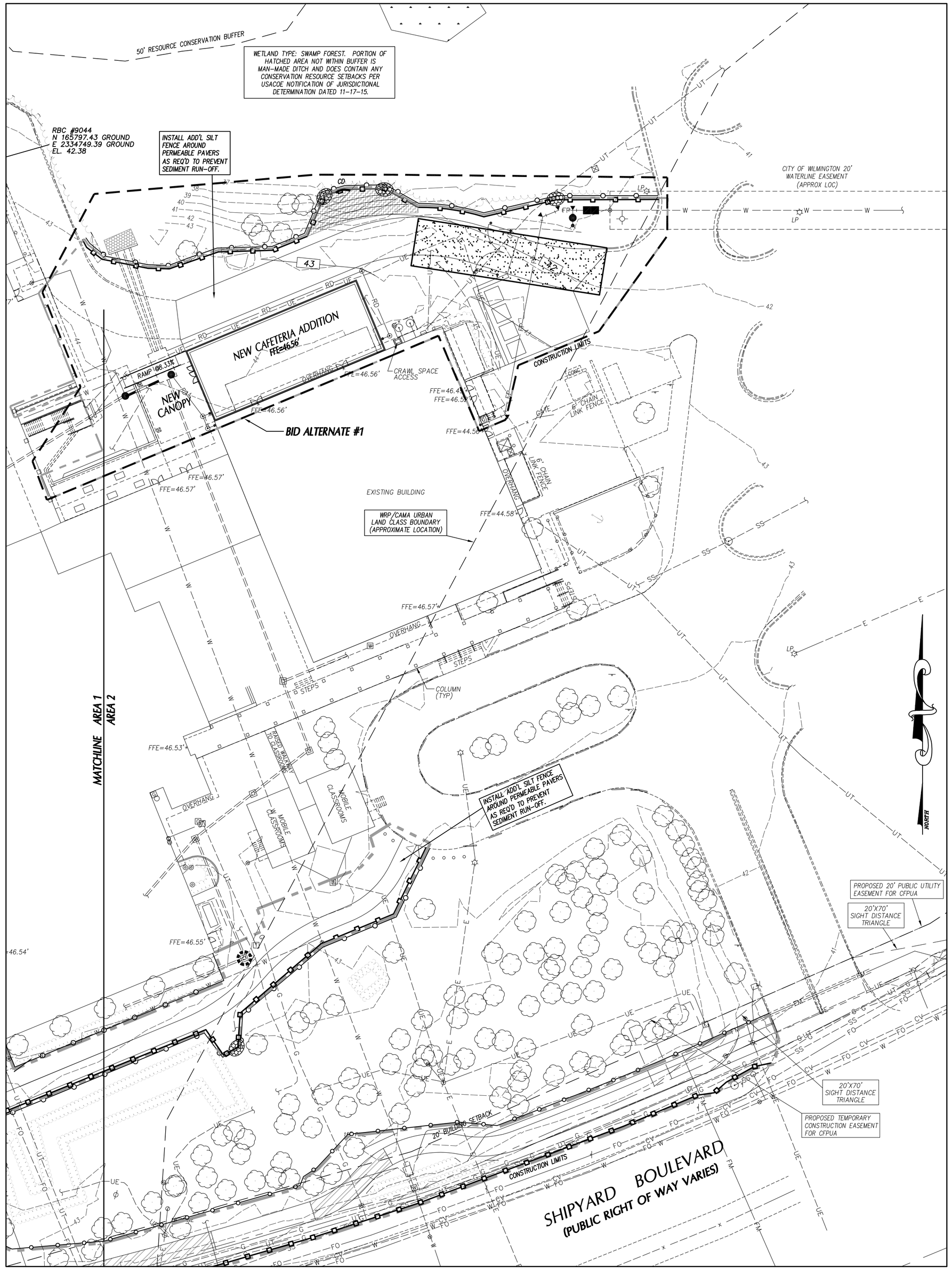

CONSTRUCTION SEQUENCE

1. INSTALL TREE PROTECTION FENCING. CONTACT CITY OF WILMINGTON/NCDENR-DEQ FOR INSPECTION PRIOR TO STARTING ANY OTHER WORK.
2. OBTAIN APPROVED PLAN AND APPROVAL PLACARD. A COPY OF THE APPROVED PLAN MUST BE ON FILE AT THE JOB SITE. NOTIFY EROSION CONTROL AUTHORITIES OF PROPOSED STARTING DATE OF LAND DISTURBING ACTIVITIES.
3. CONDUCT PRE-CONSTRUCTION CONFERENCE.
4. INSTALL PERIMETER SILT FENCES, TEMPORARY SKIMMER SEDIMENT BASIN, CONSTRUCTION ENTRANCES AND INLET PROTECTION DEVICES ON EXISTING INLETS.
5. INSTALL STORM JUNCTION MANHOLE AT NEW CAFETERIA ADDITION, SEE GRADING PLAN. INSTALL ASSOCIATED INLET PROTECTION AND RIP-RAP OUTLET PROTECTION.
6. CALL FOR INSPECTION OF INSTALLED DEVICES.
7. PERFORM CLEARING OPERATIONS.
8. STRIP TOPSOIL, STOCKPILE TOPSOIL WITHIN CONSTRUCTION LIMITS.
9. MAINTAIN ALL INSTALLED MEASURES.
10. BEGIN ROUGH GRADING OPERATIONS.
11. INSTALL STORM DRAINAGE SYSTEM AS GRADING OPERATIONS PROGRESS. INSTALL INLET AND OUTLET PROTECTION DEVICES AT NEW STRUCTURES AS THEY ARE CONSTRUCTED.
12. PROTECT ALL OPEN STORM DRAIN LINES UNDER CONSTRUCTION WITH STONE FILTER AFTER STOPPAGE OF WORK EACH DAY. AT THE END OF EACH DAY, INSTALL AND ADJUST SILT FENCE AND INLET AND OUTLET PROTECTION DEVICES.
13. RESPREAD TOPSOIL, INSTALL SLOPE PROTECTION BLANKETS AND VEGETATE STEEP SLOPES AS THEY ARE ESTABLISHED.
14. GRADE, VEGETATE AND INSTALL TEMPORARY LININGS OF CHANNELS AFTER STABILIZING UPSTREAM SLOPES. VEGETATE (OR OTHERWISE STABILIZE WITH PAVEMENT, BUILDING PAD, ETC.) IMMEDIATELY ALL DISTURBED AREAS WHERE GRADING ACTIVITIES HAVE STOPPED AND WILL NOT CONTINUE FOR MORE THAN 14-DAYS.
15. MAINTAIN ALL EROSION & SEDIMENT CONTROL MEASURES THROUGHOUT CONSTRUCTION.
16. INSTALL UNDERGROUND INFILTRATION BASIN. TEMPORARY BLOCK/PLUG PIPES THAT ENTER UNDERGROUND INFILTRATION BASIN UNTIL SITE IS STABILIZED.
17. PUMP WATER FROM TEMPORARY SKIMMER SEDIMENT BASIN THROUGH SILT BAG. REMOVE SKIMMER, BARREL AND OTHER BASIN APPURTENANCES AND GRADE TO FINISH CONTOURS.
18. COMPLETE REMAINING CURB & GUTTER AND PAVEMENT INSTALLATION.
19. RESPREAD TOPSOIL, INSTALL SLOPE PROTECTION BLANKETS AND VEGETATE REMAINING DISTURBED AREAS.
20. REMOVE TEMPORARY BLOCK/PLUG FROM UNDERGROUND INFILTRATION BASIN.
21. REMOVE ROCK INLET PROTECTION AND REMAINING TEMPORARY EROSION CONTROL MEASURES.

** ENSURE PERMEABLE PAVERS ARE INSTALLED DURING FINAL STAGES OF CONSTRUCTION AND THAT ALL AREAS UPSTREAM ARE STABILIZED PRIOR TO INSTALLATION OF PERMEABLE PAVERS. INSTALL ADDITIONAL SILT FENCE AROUND PERMEABLE PAVERS AS REQUIRED TO PREVENT SEDIMENT-RUN-OFF.

APPROVED CONSTRUCTION PLAN

	NAME	DATE
PLANNING		
TRAFFIC		
FIRE		

CITY OF WILMINGTON NORTH CAROLINA
Public Services • Engineering Division
APPROVED STORMWATER MANAGEMENT PLAN
Date:_____ Permit #_____
Signed: _____

LEGEND

- GRAVEL CONSTR. ENTRANCE SEE DETAIL SHEET C7.1.
- TEMP. INLET PROTECTION DEVICE SEE DETAIL SHEET C7.1.
- TEMPORARY SILT FENCE SEE DETAIL SHEET C7.1.
- REINFORCED SILT FENCE OUTLET SEE DETAIL SHEET C7.1.
- PERMANENT OUTLET PROTECTION SEE DETAIL SHEET C7.1.
- TCW TEMPORARY CONCRETE WASHOUT AREA, SEE DETAIL SHEET C7.1.
- TEMPORARY SEDIMENT SKIMMER BASIN. SEE DETAIL SHEET C7.9
- CONSTRUCTION LIMITS UNLESS OTHERWISE NOTED.
- PROPOSED STORM SEWER PIPES
- EXISTING STORM SEWER PIPES
- EXISTING CONTOUR
- FINISHED CONTOUR
- TEMPORARY CONTOUR (TEMP. GRADES DURING CONSTR.)

GENERAL NOTES

1. ALL CONSTRUCTION SHALL BE IN ACCORDANCE WITH ALL CITY OF WILMINGTON AND NCDOT STANDARDS, SPECIFICATIONS AND DETAILS.
2. THE CONTRACTOR SHALL COMPLY WITH ALL STATE AND LOCAL CODES IN OBSERVING EROSION CONTROL MEASURES BOTH ON AND OFF SITE. ALL OFF-SITE SOIL BORROW AND WASTE SITES SHALL BE PROPERLY PERMITTED FOR SUCH ACTIVITIES. CONTRACTOR SHALL PROVIDE WRITTEN DOCUMENTATION OF SEDIMENT & EROSION CONTROL PERMIT FOR ANY OFF-SITE SITES TO OWNER.
3. THE CONTRACTOR SHALL MAINTAIN ALL EROSION CONTROL DEVICES AFTER EACH RAINFALL EVENT OR AS DIRECTED BY LOCAL AUTHORITIES OR ARCHITECT.
4. TOTAL DISTURBED AREA: 5 AC.
5. ALL OPEN STORM PIPES SHALL BE PROTECTED WITH STONE FILTER PROTECTION AFTER WORK STOPPAGE EACH DAY. SEE DETAIL SHEET.
6. ALL STORM DRAINAGE PIPES SHALL BE THOROUGHLY FLUSHED OF ALL SEDIMENT FOLLOWING SITE STABILIZATION. INTERIOR FLUSHING OF SYSTEM SHALL BE PERFORMED AS NEEDED TO MAINTAIN PROPER FUNCTIONING OF THE DRAINAGE SYSTEM.
7. THE INDICATED STAGING AREA IS INTENDED FOR VEHICLES AND NON-ERODIBLE MATERIALS ONLY. NO SOIL, SAND OR OTHER ERODIBLE, FINE GRAINED MATERIAL SHALL BE STORED OUTSIDE OF THE LIMITS OF THE SITE PROTECTED BY SEDIMENT AND EROSION CONTROL DEVICES AND MEASURES.
8. SOIL AND OTHER MATERIALS SHALL ONLY BE TEMPORARILY STOCKPILED WITHIN THE CONSTRUCTION LIMITS PROTECTED BY SEDIMENT AND EROSION CONTROL DEVICES AND MEASURES. STOCKPILES SHALL BE STABILIZED AS REQUIRED AS INDICATED IN THE SLOPE & SURFACE STABILIZATION NOTES ON THIS PLAN.
9. TREE PROTECTION CERTIFICATION MUST BE SUBMITTED TO THE TOWN OF CARY PLANNING DEPARTMENT AND TREE PROTECTION INSPECTION COMPLETED PRIOR TO EROSION CONTROL PERMIT ISSUANCE.
10. ROADSIDE DITCHES AND CHANNELS SHALL BE STABILIZED DAILY UNTIL PERMANENT GROUND COVER IS ESTABLISHED.

SLOPE & SURFACE STABILIZATION

GROUND STABILIZATION SHALL BE PROVIDED ON ALL DISTURBED AREAS ACCORDING TO FOLLOWING SCHEDULE:

GROUND STABILIZATION

SITE AREA DESCRIPTION	STABILIZATION TIME FRAME	STABILIZATION TIME FRAME EXCEPTIONS
PERIMITER DIKES, SWALES, DITCHES AND SLOPES	7 DAYS	NONE
HIGH QUALITY WATER (HQW) ZONES	7 DAYS	NONE
SLOPES STEEPER THAN 3:1	7 DAYS	IF SLOPES ARE 10' OR LESS IN LENGTH AND ARE NOT STEEPER THAN 2:1, 14 DAYS ARE ALLOWED.
SLOPES 3:1 OR FLATTER	14 DAYS	7-DAYS FOR SLOPES GREATER THAN 50 FEET IN LENGTH.
ALL OTHER AREAS WITH SLOPES FLATTER THAN 4:1	14 DAYS	NONE (EXCEPT FOR PERIMETERS AND HQW ZONES).

EXTENSIONS OF TIME MAY BE APPROVED BY THE PERMITTING AUTHORITY BASED ON WEATHER OR OTHER SITE-SPECIFIC CONDITIONS THAT MAKE COMPLIANCE IMPRACTICABLE (SECTION 6.B(2) (ii))

THE ABOVE REQUIREMENTS ARE THE MINIMUM NECESSARY TO MEET EROSION AND SEDIMENT CONTROL REGULATIONS. THE CONTRACT DOCUMENTS INCLUDE ADDITIONAL SEEDING AND STABILIZATION REQUIREMENTS AND SCHEDULES WHICH MAY EXCEED THOSE ABOVE.

INSTALL TEMPORARY SLOPE EROSION CONTROL EXCELSIOR MATTING FOR STABILIZATION DURING THE ESTABLISHMENT OF VEGETATIVE COVER ON ALL STEEP SLOPES (6:1 OR STEEPER). UTILIZE TEMPORARY COCONUT MAT IN AREAS IDENTIFIED ON PLAN. REFER TO SPECIFICATION SECTION 312500 FOR MATERIAL SPECIFICATIONS. INSTALL MATTING PER MANUFACTURER'S INSTRUCTIONS.

MAINTENANCE PLAN

1. DURING ALL PHASES OF CONSTRUCTION, GROUNDCOVER ON EXPOSED SLOPES SHALL BE PROVIDED ACCORDING TO GROUND STABILIZATION TABLE (BELOW) FOLLOWING COMPLETION OF ANY PHASE OF GRADING.
2. FINAL PERMANENT GROUNDCOVER FOR ALL DISTURBED AREAS SHALL BE PROVIDED ON ALL DISTURBED AREAS ACCORDING TO GROUND STABILIZATION TABLE (BELOW) FOLLOWING COMPLETION OF CONSTRUCTION OR DEVELOPMENT.
3. THE ABOVE REQUIREMENTS ARE THE MINIMUM NECESSARY TO MEET EROSION AND SEDIMENT CONTROL REGULATIONS. THE CONTRACT DOCUMENTS INCLUDE ADDITIONAL SEEDING AND STABILIZATION REQUIREMENTS AND SCHEDULES WHICH MAY EXCEED THOSE ABOVE.
4. SLOPE EROSION CONTROL MATTING SHALL BE INSTALLED FOR TEMPORARY STABILIZATION DURING THE ESTABLISHMENT OF VEGETATIVE COVER ON ALL STEEP SLOPES (6:1 OR STEEPER). REFER TO MATERIAL SPECIFICATIONS. INSTALL MATTING PER MANUFACTURER'S INSTRUCTIONS.
5. ALL OTHER SEEDED AREAS SHALL BE MULCHED WITH STRAW AND TACKED WITH ASPHALT.

SELF-INSPECTION RULES

1. SELF-INSPECTION SHALL BE CONDUCTED AFTER EACH PHASE OF THE PROJECT, AND CONTINUED UNTIL PERMANENT GROUND COVER IS ESTABLISHED.
2. THE FINANCIALLY RESPONSIBLE PERSON AND/OR HIS AGENT WILL BE PERFORM SELF INSPECTIONS OF THE EROSION AND SEDIMENTATION CONTROL MEASURES USING NCDENR'S SELF INSPECTION REPORT (WORKSHEET) AND THIS WILL BE KEPT ONSITE.
3. NOTIFICATION OF LAND RESOURCES SEDIMENT AND EROSION CONTROL SELF-INSPECTION PROGRAM: THE SEDIMENTATION POLLUTION CONTROL ACT WAS AMENDED IN 2006 TO REQUIRE THAT PERSONS RESPONSIBLE FOR LAND DISTURBING ACTIVITIES INSPECT A PROJECT AFTER EACH PHASE OF THE PROJECT TO MAKE SURE THAT THE APPROVED EROSION AND SEDIMENTATION CONTROL PLAN IS BEING FOLLOWED. RULES DETAILING THE DOCUMENTATION OF THESE INSPECTIONS TOOK EFFECT OCTOBER 1, 2010. THE SELF-INSPECTION PROGRAM IS SEPARATE FROM THE WEEKLY SELF-MONITORING PROGRAM OF THE NPDES STORMWATER PERMIT FOR CONSTRUCTION ACTIVITIES. THE FOCUS OF THE SELF-INSPECTION REPORT IS THE INSTALLATION AND MAINTENANCE OF EROSION AND SEDIMENTATION CONTROL MEASURES ACCORDING TO THE APPROVED PLAN. THE INSPECTIONS MUST BE CONDUCTED AFTER EACH PHASE OF THE PROJECT, AND CONTINUED UNTIL PERMANENT GROUND COVER IS ESTABLISHED IN ACCORDANCE WITH NCGS 113A-54.1 AND 15A NCAC 4B.0131. THE SELF-INSPECTION REPORT FORM IS AVAILABLE AS AN EXCEL SPREADSHEET FROM http://portal.ncdenr.org/web/lr/erosion. IF YOU HAVE QUESTIONS OR CANNOT ACCESS THE FORM, PLEASE CONTACT NCDENR OFFICE AT 919-791-4200.

NOTE: EROSION CONTROL PLANS WILL BE REVIEWED, PERMITTED & INSPECTED BY NCDENR, NOT CITY OF WILMINGTON

REFER TO PLAN SHEET C-4.2 FOR CONSTRUCTION SEQUENCE

GRAPHIC SCALE

30 0 15 30 60 120

(IN FEET)
1 inch = 30 ft.

BOWMAN MURRAY HEMINGWAY
ARCHITECTS
514 Market Street
Wilmington, NC 28401
Tel - (910) 762-2621
Fax - (910) 762-8506

Project ID # 900-9005

CLH DESIGN, PA
400 Regency Forest Dr.
Suite 120
Cary, NC 27518
Phone: 919.319.6716
Fax: 919.319.7516
LA: C-106; PE: C-1995

NORTH CAROLINA PROFESSIONAL SEAL 23953 ENGINEER KENNETH A. LORING
3-14-16

Renovations and Additions to: John T. Hoggard High School

4305 Shipyard Blvd.
Wilmington, North Carolina 28403

JOB NUMBER	15-120
DRAWN BY	JGM
CHECKED BY	JGM
DATE	APRIL 1, 2016
REVISIONS	

CONSTRUCTION DOCUMENTS: 4-1-2016

SITE EROSION CONTROL PLAN

SHEET NUMBER

C-4.2

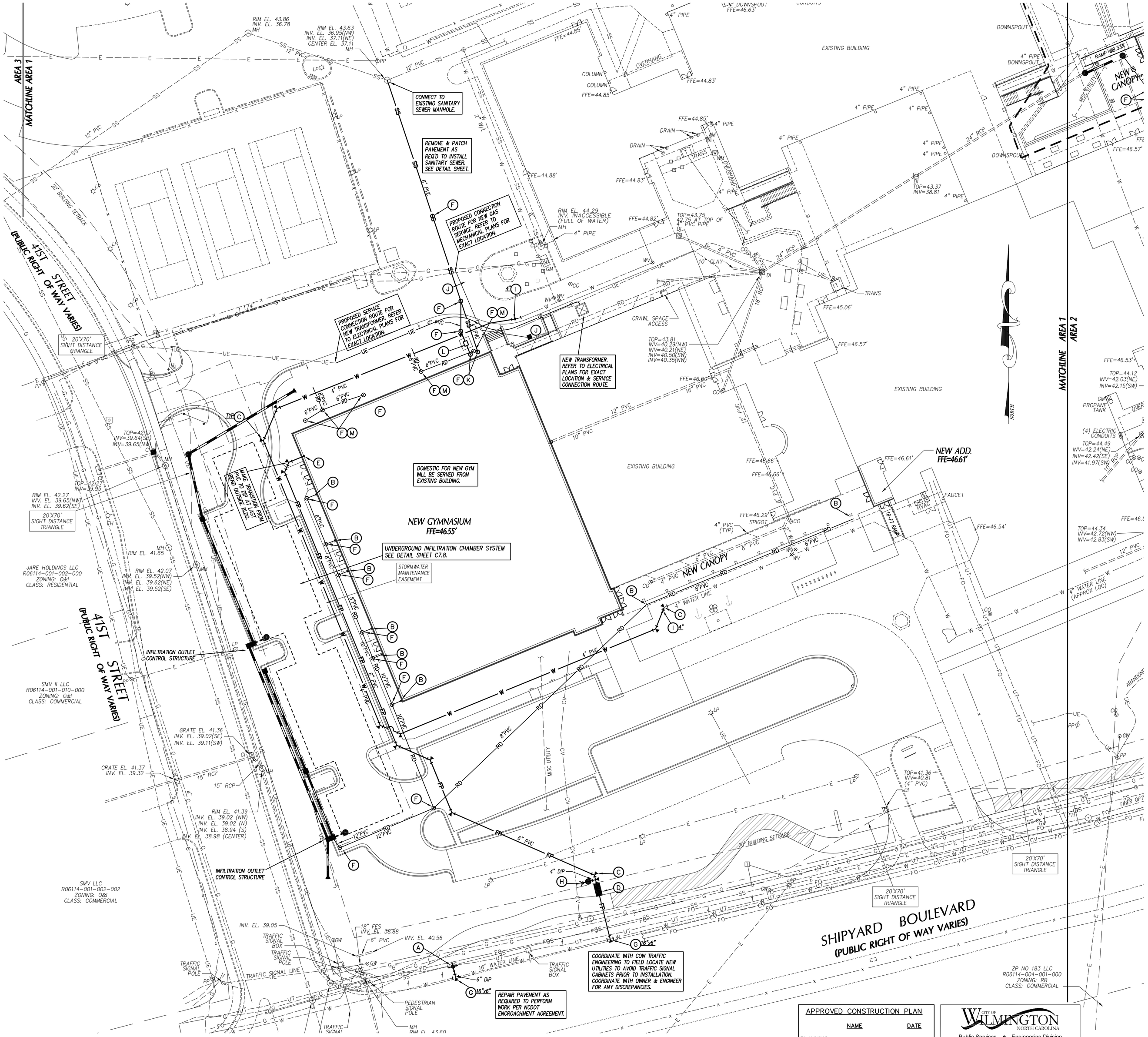

UTILITY LEGEND

	EXISTING	PROPOSED
OVERHEAD ELECTRICAL	---- E ----	
UNDERGROUND ELECTRICAL	---- UE ----	
GAS	---- G ----	
SANITARY SEWER	---- SS ----	
TELEPHONE	---- T ----	
UNDERGROUND TELEPHONE	---- UT ----	
WATER	---- W ----	
FIRE PROTECTION	---- FP ----	
FORCE MAIN	---- FM ----	FM
CHILLED WATER	---- CW ----	CW
FOUNDATION DRAIN	---- FD ----	FD
FIBER OPTIC	---- FO ----	FO
ROOF DRAIN	---- RD ----	RD
STORM DRAIN	= = = = = =	
LIGHT POLE	LP	
UTILITY POLE	PP	
MANHOLE	MH	
CLEAN OUT	CO	
DROP INLET,CATCH BASIN	DI, CB	
FIRE HYDRANT	FH	
WATER VALVE	WV	
TELEPHONE PEDESTAL	TP	
COMMUNICATION BOX		
SANITARY SEWER STRUCTURE I.D.		3
STORM SEWER STRUCTURE I.D.		B

UTILITY NOTES

1. INSTALL WATERMAINS WITH A COVER OF NO LESS THAN 4-FT. INSTALL WATER SERVICES WITH NO LESS THAN 18-IN OF COVER TO SUBGRADE.
2. INSTALL SEWER MAINS WITH A COVER OF NO LESS THAN 3-FT TO FINISHED GRADE UNLESS DUCTILE IRON PIPE IS USED. INSTALL SEWER SERVICES WITH NO LESS THAN 18-IN OF COVER TO SUBGRADE.
3. INSTALL ALL UTILITIES TO PROVIDE REQUIRED CLEARANCES AS INDICATED IN THE SPECIFICATIONS.
4. WATERLINES AND SEWER MAINS SHALL BE INSTALLED WITH A MINIMUM HORIZONTAL CLEARANCE OF 10-FT.
5. WATER AND SEWER MAINS SHALL BE INSTALLED WITH A MINIMUM VERTICAL CLEARANCE OF 12-IN TO STORM DRAINAGE PIPES.
6. COORDINATE AND SCHEDULE INSTALLATION OF ALL UTILITIES WITH OTHER PRIME CONTRACTORS, UTILITY COMPANIES AND OTHER TRADES INCLUDING BUT NOT LIMITED TO: NATURAL GAS, ELECTRICTY, TELEPHONE AND CATV.
7. VERIFY EXISTING CONDITIONS AND CONNECTIONS TO EXISTING UTILITIES PRIOR TO CONSTRUCTION. NOTIFY ARCHITECT IF ANY DISCREPANCIES ARE DISCOVERED.
8. CONTRACTOR IS RESPONSIBLE FOR ALL DAMAGES DURING CONSTRUCTION AND SHALL MAKE REPAIRS AT NO EXPENSE TO THE OWNER.
9. ALL CONSTRUCTION SHALL COMPLY WITH ALL APPLICABLE NCSBC AND OSHA REQUIREMENTS.
10. THE CONTRACTOR SHALL PROVIDE AN AS-BUILT SURVEY OF ALL UTILITY AND STORM DRAINAGE IMPROVEMENTS FOLLOWING CONSTRUCTION.
11. CONTRACTOR SHALL PHASE DEMOLITION AND NEW CONSTRUCTION TO ENSURE UNINTERRUPTED ACCESS AND UTILITY SERVICE TO ADJACENT FACILITIES. COORDINATE SHORT-TERM, OFF-HOUR, TEMPORARY SHUT-DOWNS WITH THE OWNER.
12. SEE GENERAL NOTES ON EXISTING CONDITIONS AND DEMOLITION PLAN FOR REQUIREMENTS FOR REMOVAL AND PATCHING OF PAVEMENT FOR UTILITY INSTALLATION.
13. ALL CONSTRUCTION SHALL BE IN ACCORDANCE WITH CITY OF WILMINGTON STANDARDS AND SPECIFICATIONS.
14. ALL ROOF DRAINS SHALL BE 6" PVC @ 1.04% MIN. SLOPE UNLESS INDICATED OTHERWISE. USE DUCTILE IRON WHEN COVER IS LESS THAN 24-IN.
15. ALL SANITARY SEWER SERVICES SHALL BE 4" PVC (SCH 40) @ 1.04% MIN. SLOPE UNLESS INDICATED OTHERWISE. USE DUCTILE IRON WHEN COVER IS LESS THAN 24-IN.
16. THE FOLLOWING "PERMITS" ARE REQUIRED TO BE OBTAINED FROM THE CITY OF WILMINGTON FIRE SERVICES ADMINISTRATION BY EACH RESPONSIBLE CONTRACTOR, PRIOR TO THE START OF WORK. THE "GENERAL CONTRACTOR" SHALL BE RESPONSIBLE TO MAKE SURE ALL OF HIS/HER SUBS FOLLOW THIS PROCEDURE. THE PERMITS REQUIRED ARE AS FOLLOWS:
    A. UNDERGROUND PIPIING PERMIT (FIRE LINE (S)).
    B. SPRINKLER PERMIT
    C. FIRE ALARM PERMIT
    D. KITCHEN HOOD FIRE PROTECTION PERMIT
    THE "GENERAL CONTRACTOR" SHALL ALSO MAKE SURE THAT ALL HIS SUBS PROPERLY COORDINATE THE INSPECTION PROCESS WITH THE WILMINGTON FIRE DEPARTMENT ADMINISTRATION OFFICE.
17. CONTACT THE NC ONE CALL CENTER PRIOR TO ANY DIGGING. 1-800-632-4949
18. PROJECT SHALL COMPLY WITH CITY OF WILMINGTON CROSS CONNECTION CONTROL REQUIREMENTS. WATER METERS CANNOT BE RELEASED UNTIL ALL REQUIREMENTS ARE MET AND THE STATE HAS GIVEN THEIR FINAL APPROVAL. CALL 910-343-3910 FOR INFORMATION.
19. ANY BACKFLOW PREVENTION DEVICES REQUIRED BY THE CITY WILL NEED TO BE ON THE LIST OF APPROVED DEVICES BY USCFCCCHR OR ASSE.

KEY NOTES

- (A) FIRE HYDRANT ASSEMBLY, SEE DETAIL SHEET C7.5.
- (B) DOWNSPOUT CONNECTION, SEE DETAIL SHEET C7.3.
- (C) THRUST BLOCKING, TYP, SEE DETAIL SHEET C7.5.
- (D) 6" DOUBLE CHECK VALVE ASSEMBLY (DCVA) IN ABOVE GROUND HEATED ENCLOSURE, SEE DETAIL SHEET C7.5. SEE ELEC. PLANS FOR ADD'L INFO.
- (E) EXTEND WATER MAIN TO 12-IN ABOVE FINISH FLOOR FOR FIRE PROTECTION CONNECTION, SEE DETAIL SHEET.
- (F) CLEANOUT, SEE DETAIL SHEET C7.3.
- (G) TAPPING SLEEVE AND VALVE ASSEMBLY AND BLOCKING, SEE DETAIL SHEET C7.3.
- (H) FIRE DEPARTMENT CONNECTION, SEE DETAIL SHEET C7.5.
- (I) GATE VALVE AND VALVE BOX, SEE DETAIL SHEET C7.5.
- (J) GAS METER & GAS SERVICE LINES, SEE MECHANICAL PLANS FOR ADDITIONAL INFORMATION.
- (K) EXTEND UTILITY TO WITHIN 5'-0" OF BUILDING W.LAL OR AS INDICATED ON PLUMBING PLANS. REFER TO PLUMBING PLANS FOR LOCATION & INVERT.
- (L) NEW GREASE TRAP, REFER TO PLUMBING PLANS FOR LOCATION & INVERT.
- (M) CONNECT TO ROOF DRAIN, SEE PLUMBING PLANS.

APPROVED CONSTRUCTION PLAN

NAME	DATE
PLANNING	
TRAFFIC	
FIRE	

CITY OF WILMINGTON NORTH CAROLINA
Public Services • Engineering Division
APPROVED STORMWATER MANAGEMENT PLAN
Date:_____ Permit #_____
Signed: _____

GRAPHIC SCALE
30 0 15 30 60 120
(IN FEET)
1 inch = 30 ft.

CONSTRUCTION DOCUMENTS: 4-1-2016

bmh
BOWMAN MURRAY HEMINGWAY
ARCHITECTS
514 Market Street
Wilmington, NC 28401
Tel - (910) 762-2621
Fax - (910) 762-8506

Project ID # 900-9005

CLH DESIGN,PA
400 Regency Forest Dr.
Suite 120
Cary, NC 27518
Phone: 919.319.6716
Fax: 919.319.7516
LA: C-106 PE: C-1995

NORTH CAROLINA PROFESSIONAL SEAL 23953 ENGINEER KENNETH A. LORING
3-14-16

Renovations and Additions to: John T. Hoggard High School

4305 Shipyard Blvd.
Wilmington, North Carolina 28403

JOB NUMBER	15-120
DRAWN BY	JGM
CHECKED BY	JGM
DATE	APRIL 1, 2016
REVISIONS	

SITE UTILITY PLAN

SHEET NUMBER

C-5.1

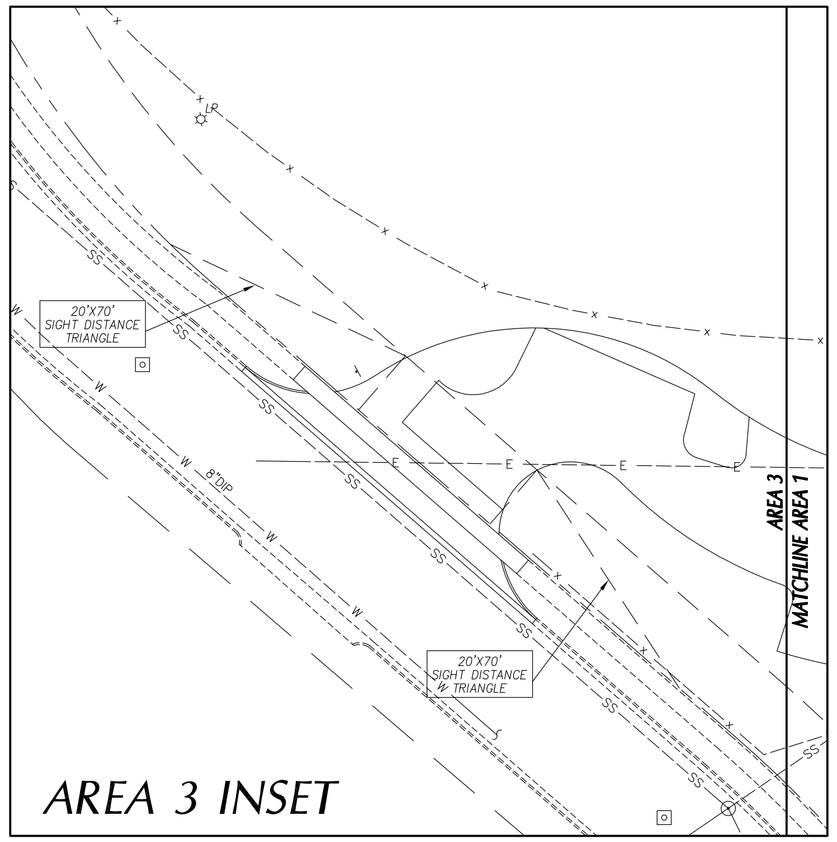

AREA 3 INSET

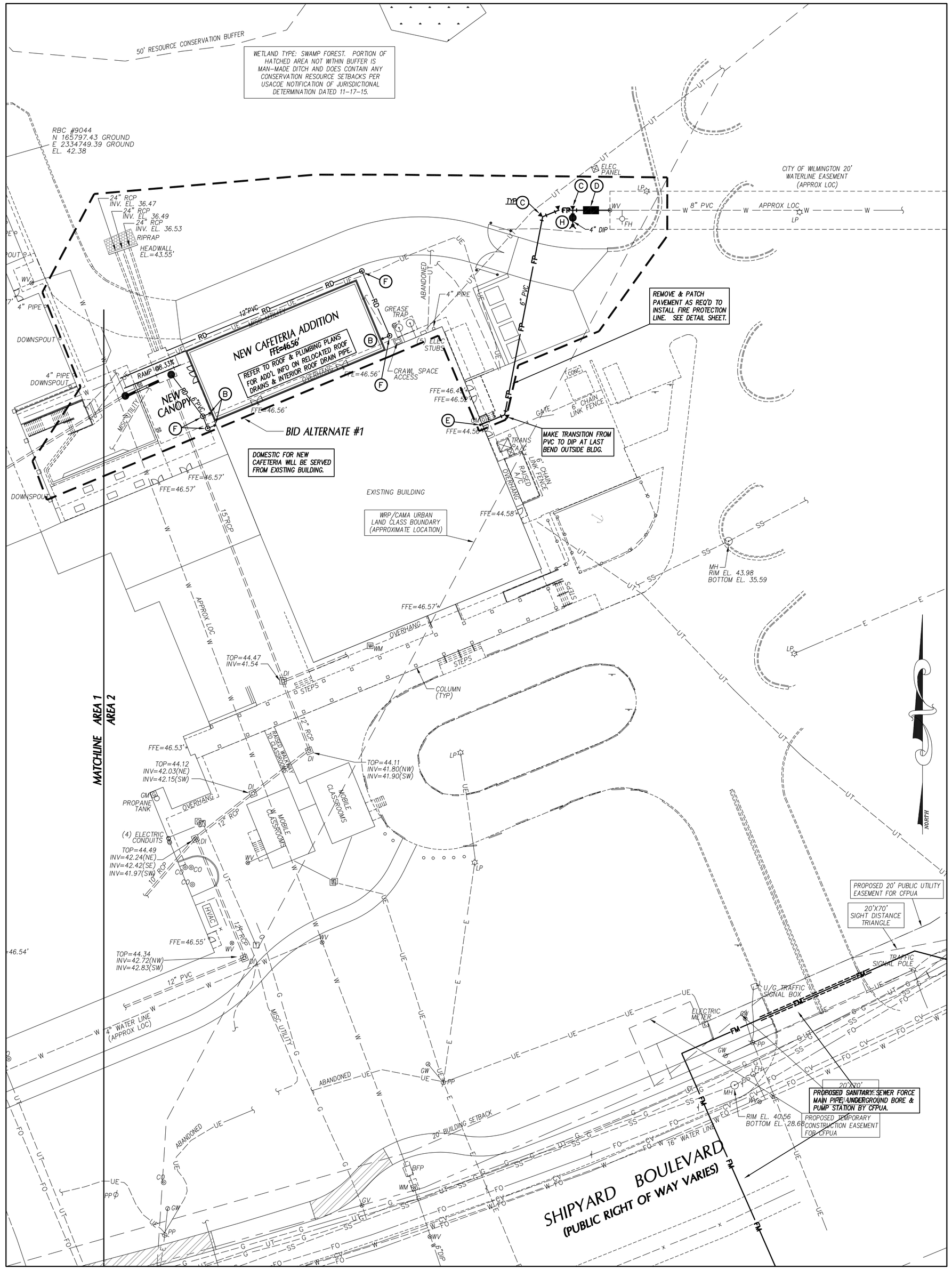

NEW FIRE HYDRANTS MUST BE BROUGHT INTO SERVICE PRIOR TO COMBUSTIBLE MATERIALS BEING DELIVERED TO THE JOB SITE COORDINATE WITH COW FIRE DEPARTMENT.

CONTRACTOR SHALL OBTAIN PRIVATE UNDERGROUND FIRE LINE PERMIT PRIOR TO INSTALLING THE FIRE PROTECTION LINE COORDINATE WITH COW FIRE & LIFE SAFETY DIVISION.

UTILITY LEGEND

	EXISTING	PROPOSED
OVERHEAD ELECTRICAL	---- E ----	
UNDERGROUND ELECTRICAL	----UE----	
GAS	---- G ----	
SANITARY SEWER	----SS----	
TELEPHONE	---- T ----	
UNDERGROUND TELEPHONE	----UT----	
WATER	---- W ----	
FIRE PROTECTION	----FP----	
FORCE MAIN	----FM----	FM
CHILLED WATER	----CW----	CW
FOUNDATION DRAIN	----FD----	FD
FIBER OPTIC	----FO----	FO
ROOF DRAIN	----RD----	RD
STORM DRAIN	==========	
LIGHT POLE	LP	
UTILITY POLE	PP	
MANHOLE	MH	
CLEAN OUT	CO	
DROP INLET,CATCH BASIN	DI, CB	
FIRE HYDRANT	FH	
WATER VALVE	WV	
TELEPHONE PEDESTAL	TP	
COMMUNICATION BOX		
SANITARY SEWER STRUCTURE I.D.		3
STORM SEWER STRUCTURE I.D.		8

UTILITY NOTES

1. INSTALL WATERMAINS WITH A COVER OF NO LESS THAN 4-FT. INSTALL WATER SERVICES WITH NO LESS THAN 18-IN OF COVER TO SUBGRADE.
2. INSTALL SEWER MAINS WITH A COVER OF NO LESS THAN 3-FT TO FINISHED GRADE UNLESS DUCTILE IRON PIPE IS USED. INSTALL SEWER SERVICES WITH NO LESS THAN 18-IN OF COVER TO SUBGRADE.
3. INSTALL ALL UTILITIES TO PROVIDE REQUIRED CLEARANCES AS INDICATED IN THE SPECIFICATIONS.
4. WATERLINES AND SEWER MAINS SHALL BE INSTALLED WITH A MINIMUM HORIZONTAL CLEARANCE OF 10-FT.
5. WATER AND SEWER MAINS SHALL BE INSTALLED WITH A MINIMUM VERTICAL CLEARANCE OF 12-IN TO STORM DRAINAGE PIPES.
6. COORDINATE AND SCHEDULE INSTALLATION OF ALL UTILITIES WITH OTHER PRIME CONTRACTORS, UTILITY COMPANIES AND OTHER TRADES INCLUDING BUT NOT LIMITED TO: NATURAL GAS, ELECTRICITY, TELEPHONE AND CATV.
7. VERIFY EXISTING CONDITIONS AND CONNECTIONS TO EXISTING UTILITIES PRIOR TO CONSTRUCTION. NOTIFY ARCHITECT IF ANY DISCREPANCIES ARE DISCOVERED.
8. CONTRACTOR IS RESPONSIBLE FOR ALL DAMAGES DURING CONSTRUCTION AND SHALL MAKE REPAIRS AT NO EXPENSE TO THE OWNER.
9. ALL CONSTRUCTION SHALL COMPLY WITH ALL APPLICABLE NCSBC AND OSHA REQUIREMENTS.
10. THE CONTRACTOR SHALL PROVIDE AN AS-BUILT SURVEY OF ALL UTILITY AND STORM DRAINAGE IMPROVEMENTS FOLLOWING CONSTRUCTION.
11. CONTRACTOR SHALL PHASE DEMOLITION AND NEW CONSTRUCTION TO ENSURE UNINTERRUPTED ACCESS AND UTILITY SERVICE TO ADJACENT FACILITIES. COORDINATE SHORT-TERM, OFF-HOUR, TEMPORARY SHUT-DOWNS WITH THE OWNER.
12. SEE GENERAL NOTES ON EXISTING CONDITIONS AND DEMOLITION PLAN FOR REQUIREMENTS FOR REMOVAL AND PATCHING OF PAVEMENT FOR UTILITY INSTALLATION.
13. ALL CONSTRUCTION SHALL BE IN ACCORDANCE WITH CITY OF WILMINGTON STANDARDS AND SPECIFICATIONS.
14. ALL ROOF DRAINS SHALL BE 6" PVC @ 1.04% MIN. SLOPE UNLESS INDICATED OTHERWISE. USE DUCTILE IRON WHEN COVER IS LESS THAN 24-IN.
15. ALL SANITARY SEWER SERVICES SHALL BE 4" PVC (SCH 40) @ 1.04% MIN. SLOPE UNLESS INDICATED OTHERWISE. USE DUCTILE IRON WHEN COVER IS LESS THAN 24-IN.
16. THE FOLLOWING "PERMITS" ARE REQUIRED TO BE OBTAINED FROM THE CITY OF WILMINGTON FIRE SERVICES ADMINISTRATION BY EACH RESPONSIBLE CONTRACTOR, PRIOR TO THE START OF WORK. THE "GENERAL CONTRACTOR" SHALL BE RESPONSIBLE TO MAKE SURE ALL OF HIS/HER SUBS FOLLOW THIS PROCEDURE. THE PERMITS REQUIRED ARE AS FOLLOWS:
    A. UNDERGROUND PIPIING PERMIT (FIRE LINE (S)).
    B. SPRINKLER PERMIT
    C. FIRE ALARM PERMIT
    D. KITCHEN HOOD FIRE PROTECTION PERMIT
    THE "GENERAL CONTRACTOR" SHALL ALSO MAKE SURE THAT ALL HIS SUBS PROPERLY COORDINATE THE INSPECTION PROCESS WITH THE WILMINGTON FIRE DEPARTMENT ADMINISTRATION OFFICE.
17. CONTACT THE NC ONE CALL CENTER PRIOR TO ANY DIGGING. 1-800-632-4949
18. PROJECT SHALL COMPLY WITH CITY OF WILMINGTON CROSS CONNECTION CONTROL REQUIREMENTS. WATER METERS CANNOT BE RELEASED UNTIL ALL REQUIREMENTS ARE MET AND THE STATE HAS GIVEN THEIR FINAL APPROVAL. CALL 910-343-3910 FOR INFORMATION.
19. ANY BACKFLOW PREVENTION DEVICES REQUIRED BY THE CITY WILL NEED TO BE ON THE LIST OF APPROVED DEVICES BY USCFCCCHR OR ASSE.

KEY NOTES

- (A) FIRE HYDRANT ASSEMBLY, SEE DETAIL SHEET C7.5.
- (B) DOWNSPOUT CONNECTION, SEE DETAIL SHEET C7.3.
- (C) THRUST BLOCKING, TYP, SEE DETAIL SHEET C7.5.
- (D) 6" DOUBLE CHECK VALVE ASSEMBLY (DCVA) IN ABOVE GROUND HEATED ENCLOSURE, SEE DETAIL SHEET C7.5. SEE ELEC. PLANS FOR ADD'L INFO.
- (E) EXTEND WATER MAIN TO 12-IN ABOVE FINISH FLOOR FOR FIRE PROTECTION CONNECTION, SEE DETAIL SHEET.
- (F) CLEANOUT, SEE DETAIL SHEET C7.3.
- (G) TAPPING SLEEVE AND VALVE ASSEMBLY AND BLOCKING, SEE DETAIL SHEET C7.3.
- (H) FIRE DEPARTMENT CONNECTION, SEE DETAIL SHEET C7.5.
- (I) GATE VALVE AND VALVE BOX, SEE DETAIL SHEET C7.5.
- (J) GAS METER & GAS SERVICE LINES, SEE MECHANICAL PLANS FOR ADDITIONAL INFORMATION.
- (K) EXTEND UTILITY TO WITHIN 5'-0" OF BUILDING WLAL OR AS INDICATED ON PLUMBING PLANS. REFER TO PLUMBING PLANS FOR LOCATION & INVERT.
- (L) NEW GREASE TRAP, REFER TO PLUMBING PLANS FOR LOCATION & INVERT.
- (M) CONNECT TO ROOF DRAIN, SEE PLUMBING PLANS.

GRAPHIC SCALE

30 0 15 30 60 120

(IN FEET)
1 inch = 30 ft.

APPROVED CONSTRUCTION PLAN

	NAME	DATE
PLANNING		
TRAFFIC		
FIRE		

CITY OF WILMINGTON NORTH CAROLINA
Public Services • Engineering Division
APPROVED STORMWATER MANAGEMENT PLAN
Date:_____ Permit #_____
Signed: _____

BOWMAN MURRAY HEMINGWAY
ARCHITECTS
514 Market Street
Wilmington, NC 28401
Tel - (910) 762-2621
Fax - (910) 762-8506

Project ID # 900-9005

CLH DESIGN,PA
400 Regency Forest Dr.
Suite 120
Cary, NC 27518
Phone: 919.319.6716
Fax: 919.319.7516
LA: C-106 PE: C-1995

NORTH CAROLINA PROFESSIONAL SEAL 23953 ENGINEER KENNETH A. LORING
3-14-16

Renovations and Additions to: John T. Hoggard High School

4305 Shipyard Blvd.
Wilmington, North Carolina 28403

JOB NUMBER	15-120
DRAWN BY	JGM
CHECKED BY	JGM
DATE	APRIL 1, 2016
REVISIONS	

CONSTRUCTION DOCUMENTS: 4-1-2016

SITE UTILITY PLAN

SHEET NUMBER

C-5.2

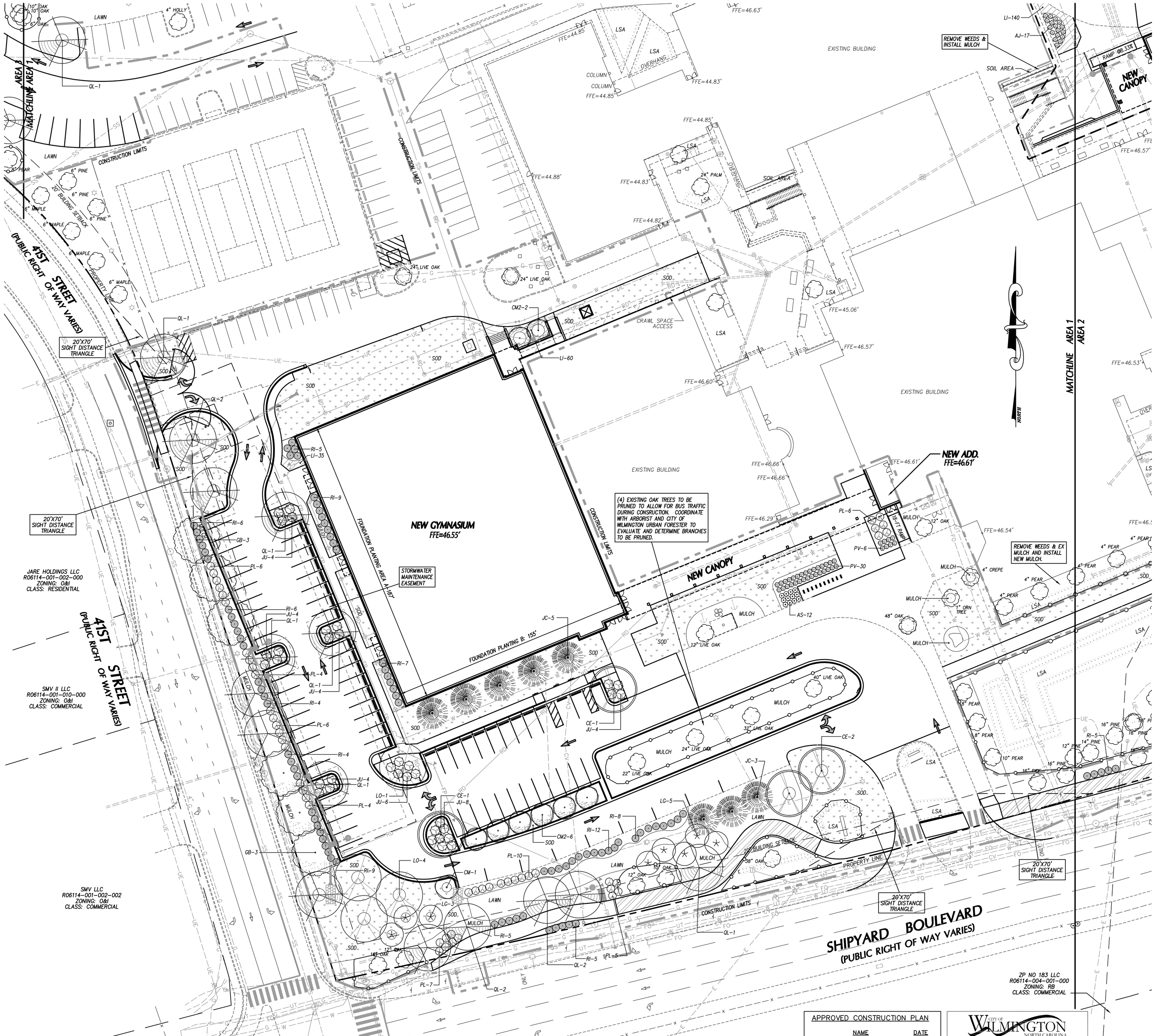

LANDSCAPE NOTES

1. ALL CONSTRUCTION SHALL BE IN ACCORDANCE WITH ALL CITY OF WILMINGTON AND/OR NCDOT STANDARDS AND SPECIFICATIONS.
2. LOCATE ALL EXISTING UTILITIES PRIOR TO INSTALLATION OF PLANT MATERIAL. NOTIFY OWNER OF ANY DISCREPANCIES BETWEEN FIELD CONDITIONS AND THOSE SHOWN ON THE PLAN.
3. VERIFICATION OF TOTAL QUANTITIES AS SHOWN ON THE PLANT LIST SHALL BE THE RESPONSIBILITY OF THE LANDSCAPE CONTRACTOR AND THE TOTAL QUANTITIES SHALL BE AS SHOWN ON THE PLAN.
4. LAWN AREAS SHALL BE SEEDED WITH COMMON BERMUDA GRASS 95% COVERAGE (BASED ON A PER SQUARE YARD SAMPLE) SHALL BE ATTAINED PRIOR TO FINAL INSPECTION.
5. ALL PLANT MATERIAL SHALL CONFORM WITH THE STANDARDS SET FORTH BY THE AMERICAN ASSOCIATION OF NURSERYMEN AND THE WRITTEN SPECIFICATIONS.
6. PLANTING BEDS TO BE MULCHED WITH A MINIMUM OF 3" OF TRIPLE SHREDDED HARDWOOD MULCH. ALL PLANT GROUPINGS SHALL BE MULCHED AS ONE BED.
7. ESTABLISH POSITIVE DRAINAGE IN ALL PLANTING BEDS AND AWAY FROM BUILDINGS.
8. APPLY PRE-EMERGENT HERBICIDE TO ALL NEW PLANTING BEDS AT AT MANUFACTURER'S RECOMMENDED RATE PRIOR TO INSTALLATION OF MULCH.
9. DO NOT INSTALL PLANT MATERIAL IN IMPERVIOUS SOILS, (i.e. HOLES WHICH, WHEN FILLED WITH WATER, DO NOT COMPLETELY DRAIN WITHIN TWO HOURS.)
10. ALL SODDED AREAS SHALL BE TIFWAY-419 BERMUDA.
11. ANY TREE WRAP SHALL BE REMOVED IMMEDIATELY AFTER INSTALLATION.
12. SEE SPECIFICATIONS REGARDING WARRANTY/MAINTENANCE REQUIREMENTS FOR ALL PLANTS, SOD, AND LAWN SEEDING.
13. DEAD OR DETERIORATING SCREENING SHALL BE REPLACED WITHIN SIX MONTHS OR DURING NEXT PLANTING SEASON.
14. ALL PROPOSED VEGETATION WITHIN SIGHT TRIANGLES SHALL NOT INTERFERE WITH CLEAR VISUAL SIGHT LINES FROM 30" - 10'.

PLANT SCHEDULE

KEY	QTY	PLANT NAME	SIZE	REMARKS
CANOPY AND UNDERSTORY TREES				
BC	3	BALD CYPRESS *Taxodium distichum*	2"-2 1/2" CAL. 10'-12' HT	B&B, STRAIGHT TRUNK FULL CROWN
CE	6	BOSQUE CHINESE ELM *Ulmus Parvifolia 'Bosque'*	2"-2 1/2" CAL. 10'-12' HT	B&B, STRAIGHT TRUNK FULL CROWN
CM2	8	CHEROKEE CRAPE MYRTLE *Lagerstroemia indica 'Cherokee'*	3-5 TRUNKS 7'-8' HT	B&B, FULL CROWN
CM	4	NATCHEZ CRAPE MYRTLE *Lagerstroemia I. x F. 'Natchez'*	3-5 TRUNKS 7'-8' HT	B&B, FULL CROWN
GB	6	AUTUMN GOLD GINKGO (MALE ONLY) *Ginkgo biloba 'Autumn Gold'*	2"-2 1/2" CAL. 10'-12' HT	B&B, STRAIGHT TRUNK FULL CROWN
JC	8	JAPANESE CRYPTOMERIA *Cryptomeria japonica*	6'-7' HT. MIN. B&B	B&B, STRAIGHT TRUNK FULL TO GROUND
LG	12	LITTLE GEM MAGNOLIA *Magnolia grandiflora 'Little Gem'*	1"-1 1/2" CAL. 8'-10' HT	B&B, STRAIGHT TRUNK FULL TO GROUND
LO	4	LIVE OAK *Quercus virginiana*	2"-2 1/2" CAL. 10'-12' HT	B&B, STRAIGHT TRUNK FULL CROWN
QL	20	LAUREL OAK *Quercus laurifolia 'Darlington'*	2"-2 1/2" CAL. 10'-12' HT	B&B, STRAIGHT TRUNK FULL CROWN
SHRUBS AND GROUNDCOVERS				
AJ	17	ROZANNIE JAPANESE AUCUBA *Aucuba japonica 'Rozannie'*	18"-24" HT/SPR. CONT.	CONT., FULL 4.0' O.C.
AS	20	LITTLE BLUESTEM *Andropogon scoparium 'The Blues'*	18"-24" HT/SPR. CONT.	CONT., FULL 4.0' O.C.
JU	43	BLUE PACIFIC JUNIPER *Juniperus conferta 'Blue Pacific'*	15"-18" SPR. CONT.	CONT., FULL 6' O.C.
LI	275	BIG BLUE LIRIOPE *Liriope muscari 'Big Blue'*	3-5 BIBS	SPACED 18" O.C.
PL	59	DWARF CHERRY LAUREL *Prunus laurocerasus 'Otto Luyken'*	18" HT./SPR. CONT.	CONT., FULL 4' O.C.
PV	36	SWITCHGRASS *Panicum virgatum 'Shenandoah'*	18"-24" HT/SPR. CONT.	CONT., FULL 4.0' O.C.
RI	106	REDBIRD INDIAN HAWTHORN *Rhaphiolepsis indica 'Redbird'*	18" HT./SPR. CONT.	CONT., FULL 4' O.C.

GRAPHIC SYMBOLS SUPERCEDE WRITTEN QUANTITES WHERE DISCREPANCIES OCCUR. SEE SHEET C7.6 FOR MORE INFORMATION.

TIFWAY 419 SOD, SEE DETAIL SHEET.

REFER TO PLAN SHEET C-6.2 FOR LANDSCAPE CALCULATIONS.

A TREE REMOVAL/PRESERVATION PERMIT IS REQUIRED PRIOR TO REMOVING ANY TREES. CONTRACTOR SHALL OBTAIN & COMPLETE PERMIT. CONTACT CITY OF WILMINGTON ZONING DEPARTMENT TO OBTAIN COPY OF PERMIT.

APPROVED CONSTRUCTION PLAN

	NAME	DATE
PLANNING		
TRAFFIC		
FIRE		

CITY OF WILMINGTON NORTH CAROLINA
Public Services • Engineering Division
APPROVED STORMWATER MANAGEMENT PLAN
Date:_____ Permit #_____
Signed:_____

GRAPHIC SCALE
30 0 15 30 60 120
(IN FEET)
1 inch = 30 ft.

BOWMAN MURRAY HEMINGWAY
ARCHITECTS
514 Market Street
Wilmington, NC 28401
Tel - (910) 762-2621
Fax - (910) 762-8506

Project ID # 900-9005

CLH DESIGN, P.A
400 Regency Forest Dr.
Suite 120
Cary, NC 27518
Phone: 919.319.6716
Fax: 919.319.7816
LA: C-106 PE: C-1995

NORTH CAROLINA LANDSCAPE ARCHITECT PJM 1861 JAMES GLENN MEDLIN 3-14-16

Renovations and Additions to: John T. Hoggard High School

4305 Shipyard Blvd.
Wilmington, North Carolina 28403

JOB NUMBER	15-120
DRAWN BY	JGM
CHECKED BY	JGM
DATE	APRIL 1, 2016
REVISIONS	

CONSTRUCTION DOCUMENTS: 4-1-2016

SITE PLANTING PLAN

SHEET NUMBER

C-6.1

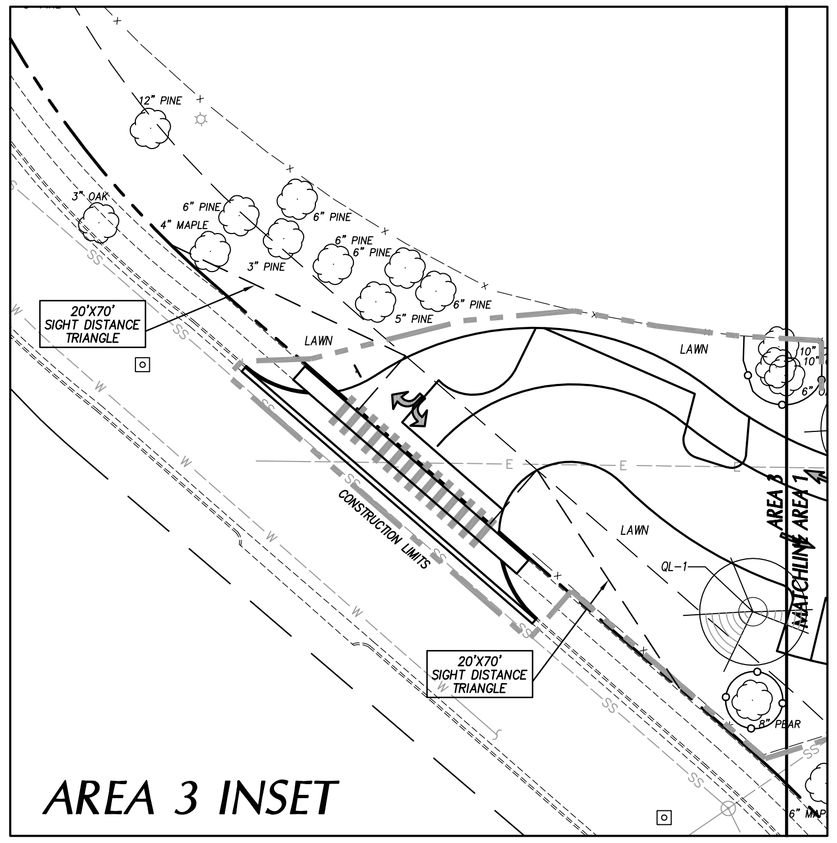

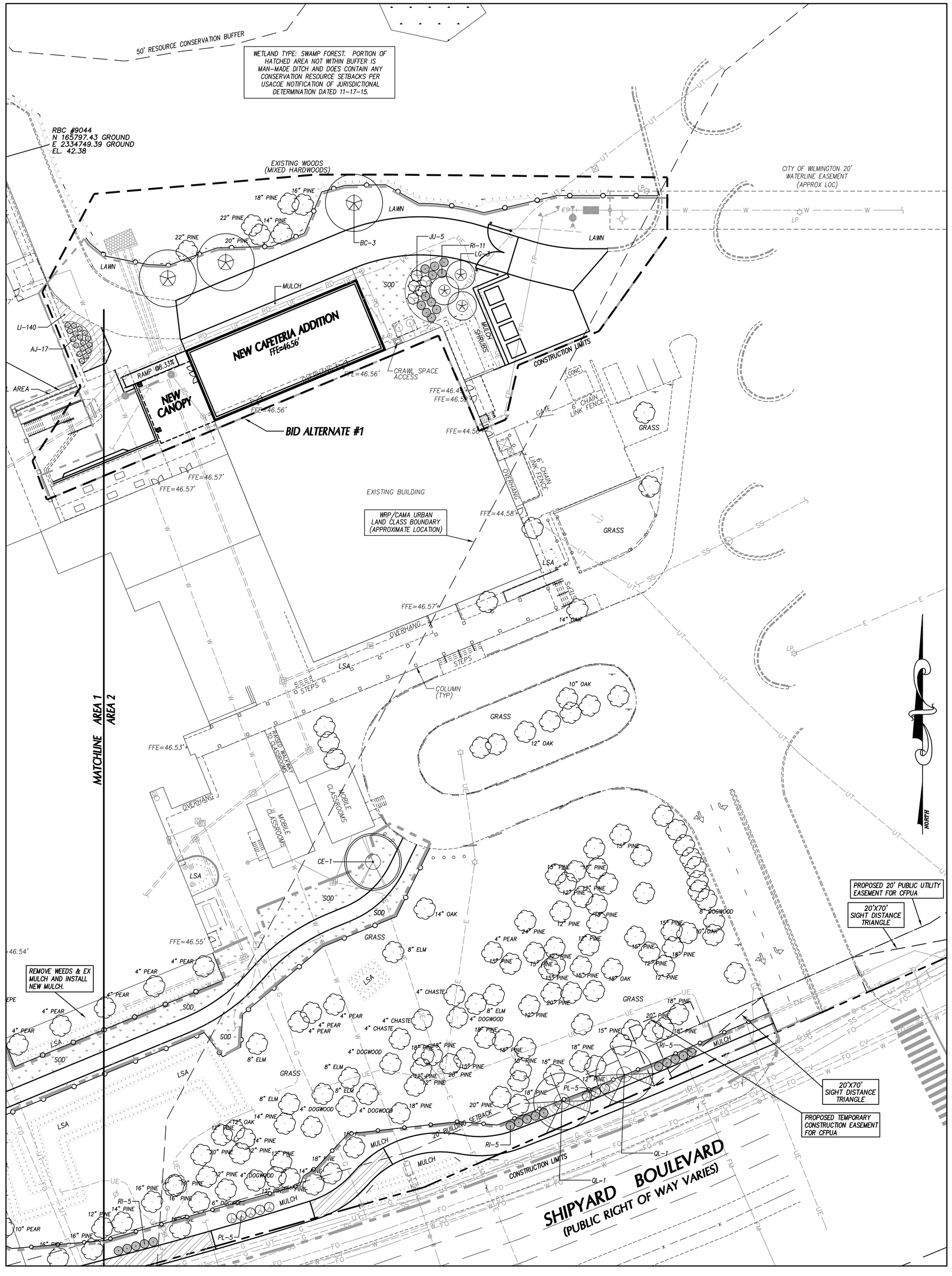

LANDSCAPE CALCULATIONS

STREET YARD REQUIREMENTS

STREET YARD FACTOR = 12
MINIMUM STANDARD: 1 CANOPY TREE (3" CAL. MIN.) – 3 UNDERST. IF PWR. LINE
6 SHRUBS (12" HT. MIN.) OR
6 SHRUBS (36" HT. MIN. IF ADJ. TO A PARKING AREA)
PER 600 SQ. FT. OF STREETYARD

PRIMARY STREET YARD; SHIPYARD BOULEVARD – 8–18' WIDTH (TO LIMITS OF WORK)
SQUARE FEET REQUIRED = 12(862.5 LF–35 LF) = 9,930 SF
MINIMUM STANDARD REQUIRED: 17 CANOPY TREES, 100 SHRUBS

PROVIDED: 7 NEW CANOPY TREES — 55 NEW SHRUBS
7 EXISTING CANOPY TREES
7 EXISTING PINES, EXIST. HEDGE

SECONDARY STREET YARD; 41ST STREET – 8–18' WIDTH (TO LIMITS OF WORK)
SQUARE FEET REQUIRED = 12(376LF)/2 = 2,256 SF
MINIMUM STANDARD REQUIRED: 4 CANOPY TREES
23 SHRUBS
PROVIDED: 17 EXISTING CANOPY TREES
23 SHRUBS
EXISTING HEDGE

FOUNDATION PLANTING REQUIREMENTS (adjacent to parking or internal drive aisle)

REQUIREMENT= AREA OF BUILDING FACE X 12%

FOUNDATION PLANTING: AREA A
BUILDING FACE = 187 FT.
BUILDING HEIGHT = 42 FT.
PLANTING AREA REQUIRED = 943 SQ. FT.
PLANTING AREA PROVIDED = 1,113 SQ. FT.

FOUNDATION PLANTING: AREA B
BUILDING FACE = 154 FT.
BUILDING HEIGHT = 42 FT.
PLANTING AREA REQUIRED = 776 SQ. FT.
PLANTING AREA PROVIDED = 3,389 SQ. FT.

PARKING AREA PLANTING REQUIREMENTS

PARKING AREA PERIMETER PLANTINGS: N/A

PARKING AREA INTERIOR PLANTINGS:

REQUIREMENT: INTERIOR LANDSCAPING MUST EQUAL 8% OF TOTAL PARKING, LOADING, AND DRIVE AISLE, AND PEDESTRIAN USE AREA
MIN. CAL. 2" TREE PER 144 SQ FT. OF PARKING ISLAND, NO LESS THAN 12' WIDE ISLAND MUST HAVE GROUNDCOVER
NO PARKING SPACE MORE THAN 120 FEET AWAY FROM AN ISLAND
75% SHADE TREES

15 TREES 2" CALIPER OR GREATER PER ACRE OF DISTURBED LAND
ACRES DISTURBED: 5.0 — CREDITS REQUIRED: 75 CREDITS

TREES PROVIDED: 22 TREES/22 CREDITS

CREDITS FOR EXISTING TREES:

SIZE	QTY.	CREDIT VALUE	TOTAL
2–5" CALIPER	–	1	–
6–11"	15	2	30
12–17"	2	3	6
18–23"	–	4	–
>24"	4	DBH/6 (178")	29
	TOTAL:		65

TOTAL CREDITS PROVIDED: 87

APPROVED CONSTRUCTION PLAN

NAME DATE

PLANNING _____

TRAFFIC _____

FIRE _____

CITY OF WILMINGTON NORTH CAROLINA
Public Services • Engineering Division
APPROVED STORMWATER MANAGEMENT PLAN
Date:_____ Permit #_____
Signed: _____

LANDSCAPE NOTES

1. ALL CONSTRUCTION SHALL BE IN ACCORDANCE WITH ALL CITY OF WILMINGTON AND/OR NCDOT STANDARDS AND SPECIFICATIONS.
2. LOCATE ALL EXISTING UTILITIES PRIOR TO INSTALLATION OF PLANT MATERIAL. NOTIFY OWNER OF ANY DISCREPANCIES BETWEEN FIELD CONDITIONS AND THOSE SHOWN ON THE PLAN.
3. VERIFICATION OF TOTAL QUANTITIES AS SHOWN ON THE PLANT LIST SHALL BE THE RESPONSIBILITY OF THE LANDSCAPE CONTRACTOR AND THE TOTAL QUANTITIES SHALL BE AS SHOWN ON THE PLAN.
4. LAWN AREAS SHALL BE SEEDED WITH COMMON BERMUDA GRASS 95% COVERAGE (BASED ON A PER SQUARE YARD SAMPLE) SHALL BE ATTAINED PRIOR TO FINAL INSPECTION.
5. ALL PLANT MATERIAL SHALL CONFORM WITH THE STANDARDS SET FORTH BY THE AMERICAN ASSOCIATION OF NURSERYMEN AND THE WRITTEN SPECIFICATIONS.
6. PLANTING BEDS TO BE MULCHED WITH A MINIMUM OF 3" OF TRIPLE SHREDDED HARDWOOD MULCH. ALL PLANT GROUPINGS SHALL BE MULCHED AS ONE BED.
7. ESTABLISH POSITIVE DRAINAGE IN ALL PLANTING BEDS AND AWAY FROM BUILDINGS.
8. APPLY PRE-EMERGENT HERBICIDE TO ALL NEW PLANTING BEDS AT AT MANUFACTURER'S RECOMMENDED RATE PRIOR TO INSTALLATION OF MULCH.
9. DO NOT INSTALL PLANT MATERIAL IN IMPERVIOUS SOILS, (i.e. HOLES WHICH, WHEN FILLED WITH WATER, DO NOT COMPLETELY DRAIN WITHIN TWO HOURS.)
10. ALL SODDED AREAS SHALL BE TIFWAY-419 BERMUDA.
11. ANY TREE WRAP SHALL BE REMOVED IMMEDIATELY AFTER INSTALLATION.
12. SEE SPECIFICATIONS REGARDING WARRANTY/MAINTENANCE REQUIREMENTS FOR ALL PLANTS, SOD, AND LAWN SEEDING.
13. DEAD OR DETERIORATING SCREENING SHALL BE REPLACED WITHIN SIX MONTHS OR DURING NEXT PLANTING SEASON.
14. ALL PROPOSED VEGETATION WITHIN SIGHT TRIANGLES SHALL NOT INTERFERE WITH CLEAR VISUAL SIGHT LINES FROM 30" – 10'.

PLANT SCHEDULE

KEY	QTY	PLANT NAME	SIZE	REMARKS
CANOPY AND UNDERSTORY TREES				
BC	3	BALD CYPRESS Taxodium distichum	2"–2 1/2" CAL. 10'–12' HT	B&B, STRAIGHT TRUNK FULL CROWN
CE	6	BOSQUE CHINESE ELM Ulmus Parvifolia 'Bosque'	2"–2 1/2" CAL. 10'–12' HT	B&B, STRAIGHT TRUNK FULL CROWN
CM2	8	CHEROKEE CRAPE MYRTLE Lagerstroemia indica 'Cherokee'	3–5 TRUNKS 7'–8' HT	B&B, FULL CROWN
CM	4	NATCHEZ CRAPE MYRTLE Lagerstroemia I. x F. 'Natchez'	3–5 TRUNKS 7'–8' HT	B&B, FULL CROWN
GB	6	AUTUMN GOLD GINKGO (MALE ONLY) Ginkgo biloba 'Autumn Gold'	2"–2 1/2" CAL. 10'–12' HT	B&B, STRAIGHT TRUNK FULL CROWN
JC	8	JAPANESE CRYPTOMERIA Cryptomeria japonica	6'–7' HT. MIN. B&B	B&B, STRAIGHT TRUNK FULL TO GROUND
LG	12	LITTLE GEM MAGNOLIA Magnolia grandiflora 'Little Gem'	1"–1 1/2" CAL. 8'–10' HT	B&B, STRAIGHT TRUNK FULL TO GROUND
LO	4	LIVE OAK Quercus virginiana	2"–2 1/2" CAL. 10'–12' HT	B&B, STRAIGHT TRUNK FULL CROWN
QL	20	LAUREL OAK Quercus laurifolia 'Darlington'	2"–2 1/2" CAL. 10'–12' HT	B&B, STRAIGHT TRUNK FULL CROWN
SHRUBS AND GROUNDCOVERS				
AJ	17	ROZANNIE JAPANESE AUCUBA Aucuba japonica 'Rozannie'	18"–24" HT/SPR. CONT.	CONT., FULL 4.0' O.C.
AS	20	LITTLE BLUESTEM Andropogon scoparium 'The Blues'	18"–24" HT/SPR. CONT.	CONT., FULL 4.0' O.C.
JU	43	BLUE PACIFIC JUNIPER Juniperus conferta 'Blue Pacific'	15"–18" SPR. CONT.	CONT., FULL 6' O.C.
LI	275	BIG BLUE LIRIOPE Liriope muscari 'Big Blue'	3–5 BIBS	SPACED 18" O.C.
PL	59	DWARF CHERRY LAUREL Prunus laurocerasus 'Otto Luyken'	18" HT./SPR. CONT.	CONT., FULL 4' O.C.
PV	36	SWITCHGRASS Panicum virgatum 'Shenandoah'	18"–24" HT/SPR. CONT.	CONT., FULL 4.0' O.C.
RI	106	REDBIRD INDIAN HAWTHORN Rhaphiolepsis indica 'Redbird'	18" HT./SPR. CONT.	CONT., FULL 4' O.C.

GRAPHIC SYMBOLS SUPERCEDE WRITTEN QUANTITES WHERE DISCREPANCIES OCCUR. SEE SHEET C7.6 FOR MORE INFORMATION.

TIFWAY 419 SOD, SEE DETAIL SHEET.

REFER TO PLAN SHEET C-6.2 FOR LANDSCAPE CALCULATIONS.

A TREE REMOVAL/PRESERVATION PERMIT IS REQUIRED PRIOR TO REMOVING ANY TREES. CONTRACTOR SHALL OBTAIN & COMPLETE PERMIT. CONTACT CITY OF WILMINGTON ZONING DEPARTMENT TO OBTAIN COPY OF PERMIT.

GRAPHIC SCALE
30 0 15 30 60 120
(IN FEET)
1 inch = 30 ft.

BOWMAN MURRAY HEMINGWAY
ARCHITECTS
514 Market Street
Wilmington, NC 28401
Tel - (910) 762-2621
Fax - (910) 762-8506

Project ID # 900-9005

CLH DESIGN, P.A.
400 Regency Forest Dr.
Suite 120
Cary, NC 27518
Phone: 919.319.6716
Fax: 919.319.7516
LA: C-106 PE: C-1595

NORTH CAROLINA LANDSCAPE ARCHITECT JGM 1861 JAMES GLENN MEDLIN 3-14-16

Renovations and Additions to: John T. Hoggard High School

4305 Shipyard Blvd.
Wilmington, North Carolina 28403

JOB NUMBER 15-120
DRAWN BY JGM
CHECKED BY JGM
DATE APRIL 1, 2016
REVISIONS

CONSTRUCTION DOCUMENTS: 4-1-2016

SITE PLANTING PLAN

SHEET NUMBER

C-6.2

CITY OF WILMINGTON TREE PROTECTION FENCE N.T.S.

NOTE:
THE CRITICAL ROOT ZONE (CRZ) OF A TREE IS WHERE THE MAJORITY OF A TREE'S ROOTS LAY. 85% OF MOST TREE ROOTS ARE FOUND IN THE TOP 24" OF THE SOIL AND SUPPLY THE MAJORITY OF NUTRIENTS AND WATER. GENERALLY, ROOTS SPREAD OUT 2–3X THE HEIGHT OF THE TREE.

NOTE:
CROWN OF THE TREE IS NEEDED FOR LEAF GROWTH TO PRODUCE OXYGEN, FILTER THE AIR, REDUCE WIND AND SOFTEN NOISE. DO NOT DISFIGURE CROWN WITH INTENSIVE PRUNING.

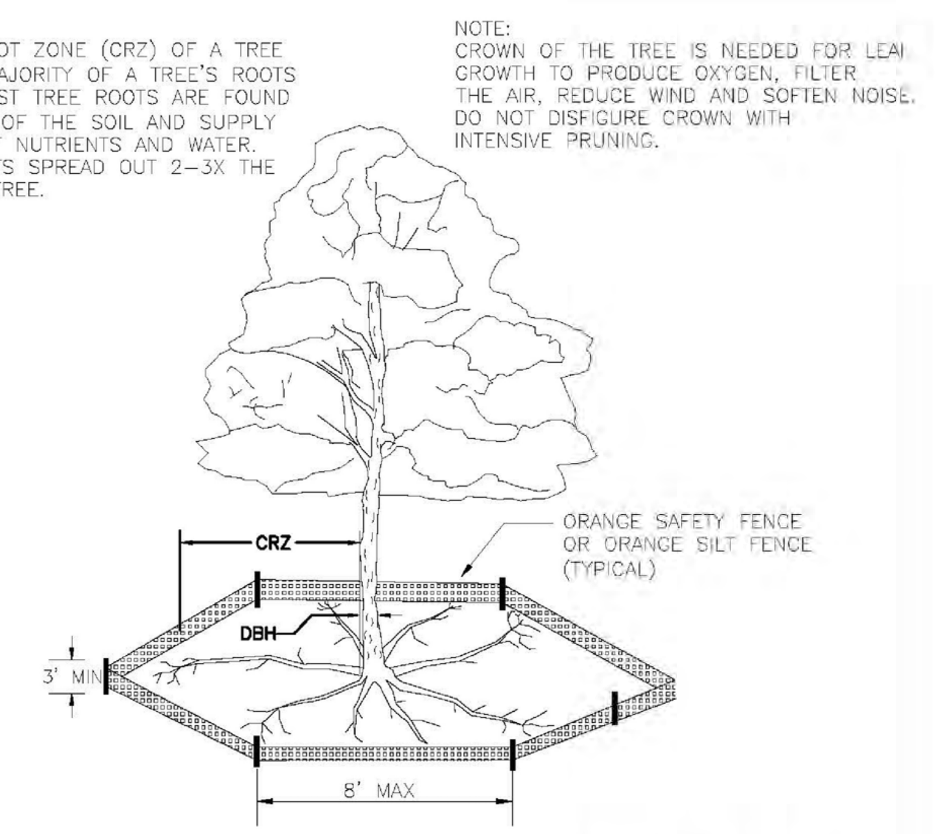

NOTES:
1. PROTECT CRITICAL ROOT ZONE (CRZ) OF TREES PRIOR TO CONSTRUCTION. CLEARLY MARK THE TREES AND ERECT A PROTECTIVE BARRIER AT THE CRZ. BARRIER SHALL BE MAINTAINED UNTIL CONSTRUCTION IS COMPLETE.
2. CRZ RADIUS IS 1 FT PER INCH OF TREE DIAMETER AT BREAST HEIGHT (DBH).
3. IF CONSTRUCTION OCCURS WITHIN THE CRZ, AT LEAST 12" OF MULCH AND/OR LOGGING MATTS SHALL BE PLACED WHERE MACHINERY MANEUVERS TO REDUCE SOIL COMPACTION IN THIS ZONE.
4. WHERE SIDEWALKS AND PATHWAYS PASS WITHIN CRZ, EXTRA CARE SHALL BE TAKEN TO AVOID DAMAGE TO THE ROOTS. ALTERNATE CONSTRUCTION METHODS, SUCH AS A REINFORCED SIDEWALK, SHALL BE IMPLEMENTED AS NECESSARY.
5. FOR ALL TREES, CUTTING OF LARGE STRUCTURAL ROOTS LOCATED NEAR THE BASE OF THE TRUNK IS PROHIBITED. DO NOT COMPACT SOIL BENEATH TREES. NO VEHICLE SHALL BE ALLOWED TO PARK UNDER TREES. NO MATERIALS OR EQUIPMENT SHALL BE STORED BENEATH TREES. DAMAGING THE BARK WITH LAWNMOWERS, CONSTRUCTION EQUIPMENT, OR ANYTHING ELSE IS PROHIBITED. CONTRACTOR SHALL REPAIR DAMAGE TO TREES.
6. FAILING TO INSTALL OR MAINTAIN PROTECTION MEASURES SHALL RESULT IN A STOP WORK ORDER AND FINE OF $500/DAY. DISTURBANCE OTHER THAN THAT ALLOWED ON THE APPROVED PLAN WILL REQUIRE OWNER TO POST A LETTER OF CREDIT FOR 3 YRS FOR TREE MITIGATION.

STANDARD DETAIL		
DATE: JAN. 2015 DRAWN BY JSR CHECKED BY RDG, P.E. SCALE NOT TO SCALE	TREE PROTECTION DURING CONSTRUCTION SHEET 1 of 2	CITY OF WILMINGTON NORTH CAROLINA CITY OF WILMINGTON ENGINEERING PO BOX 1810 WILMINGTON, NC 28402 (910) 341-7807 SD 15-09

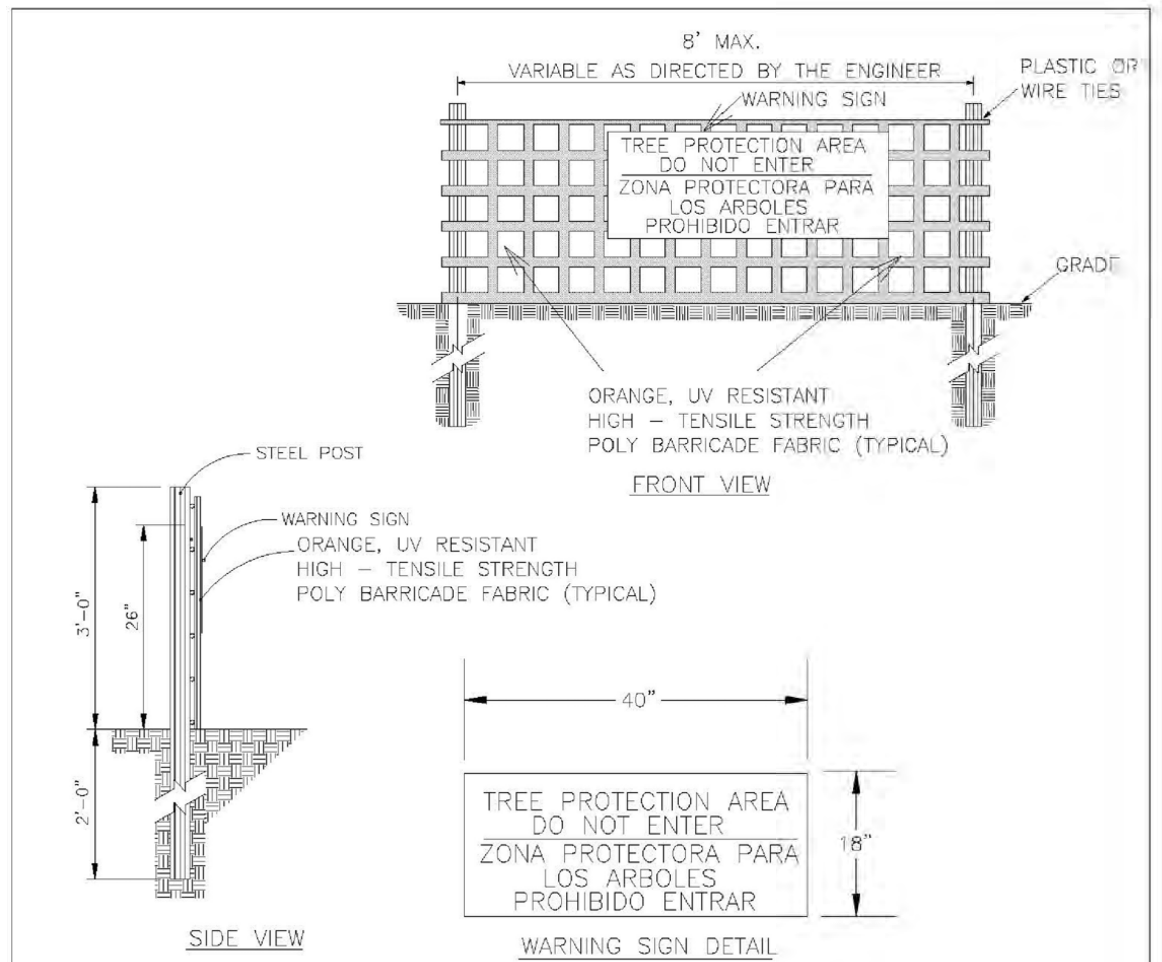

NOTES:
1. THE TREE PROTECTION FENCING SHALL NOT BE VIOLATED FOR THE ENTIRE DURATION OF THE PROJECT WITHOUT APPROVAL FROM URBAN FORESTRY STAFF.
2. WARNING SIGNS TO BE MADE OF DURABLE, WEATHERPROOF MATERIAL. LETTERS TO BE 3" HIGH, MINIMUM, CLEARLY LEGIBLE AND SPACED AS DETAILED.
3. SIGNS SHALL BE PLACED AT 50' MAXIMUM INTERVALS. PLACE A SIGN AT EACH END OF LINEAR TREE PROTECTION AND 50' ON CENTER THEREAFTER. FOR TREE PROTECTION AREAS LESS THAN 100' IN PERIMETER, PROVIDE NO LESS THAN TWO SIGNS PER PROTECTION AREA.
4. ATTACH SIGNS SECURELY TO FENCE POSTS AND FABRIC. MAINTAIN TREE PROTECTION FENCE AND SIGNS THROUGHOUT DURATION OF PROJECT.
5. TREE PROTECTION FENCING AND SIGNAGE SHALL BE REMOVED AFTER CONSTRUCTION.
6. ADDITIONAL SIGNS MAY BE REQUIRED BY CITY OF WILMINGTON, BASED ON ACTUAL FIELD CONDITIONS.

STANDARD DETAIL		
DATE: JAN. 2015 DRAWN BY JSR CHECKED BY RDG, P.E. SCALE NOT TO SCALE	TREE PROTECTION DURING CONSTRUCTION SHEET 2 of 2	CITY OF WILMINGTON NORTH CAROLINA CITY OF WILMINGTON ENGINEERING PO BOX 1810 WILMINGTON, NC 28402 (910) 341-7807 SD 15-09

SILT BAG INLET PROTECTION N.T.S.

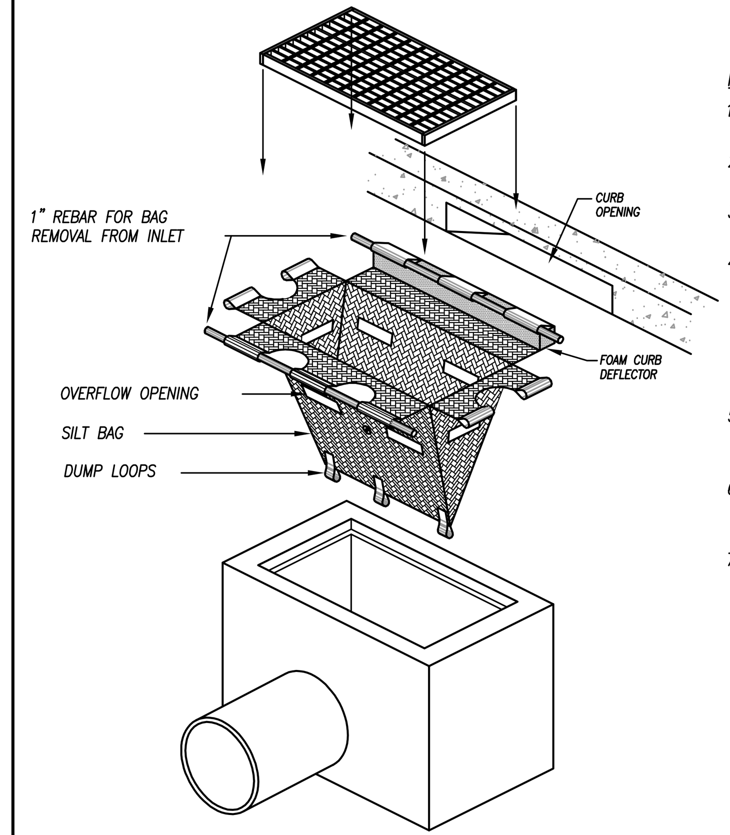

NOTES:
1. CONTRACTOR TO INSPECT SILT BAG EVERY TWO WEEKS OR AFTER EVERY SUBSTANTIAL RAIN EVENT.
2. CONTRACTOR TO REMOVE AND DISPOSE OF COLLECTED SILT AT AN ACCEPTABLE OFF SITE LOCATION.
3. COLLECTED SEDIMENT TO BE REMOVED ROUTINELY TO ENSURE FUNCTIONALITY OF SILT BAG.
4. DEVICE SHALL BE MANUFACTURED FROM WOVEN POLYPROPYLENE GEOTEXTILE TO FIT THE OPENING OF A CATCH BASIN OR DROP INLET TO FILTER SEDIMENT FROM RUNOFF ENTERING THE INLET. DEVICE SHALL BE PROVIDED WITH AN INTEGRAL CURB DEFLECTOR IF INSTALLED AT A CATCH BASIN WITH A VERTICAL OPENING ADJACENT TO A HORIZONTAL GRATE.
5. THE DEVICE SHALL BE A HIGH FLOW "SILTSACK" AS MANUFACTURED BY ACF ENVIRONMENTAL, INC. OR APPROVED EQUAL.
6. INSTALL DEVICE IN ACCORDANCE WITH MANUFACTURER'S INSTRUCTIONS AND INSTALL A CURB DEFLECTOR IF APPROPRIATE.
7. INSPECT DEVICE AFTER EACH RAIN EVENT AND AT INTERVALS NOT EXCEEDING TWO WEEKS DURING CONSTRUCTION. REMOVE, EMPTY, CLEAN, AND REPLACE THE DEVICE AS NEEDED DURING CONSTRUCTION. EMPTY COLLECTED SEDIMENT IN APPROVED, PROTECTED LOCATION. REMOVE AND DISPOSE OF DEVICE FOLLOWING FULL AND PERMANENT STABILIZATION OF THE CONTRIBUTING DRAINAGE AREA.

STONE FILTER INLET PROTECTION FOR STORM DRAIN UNDER CONSTRUCTION N.T.S.

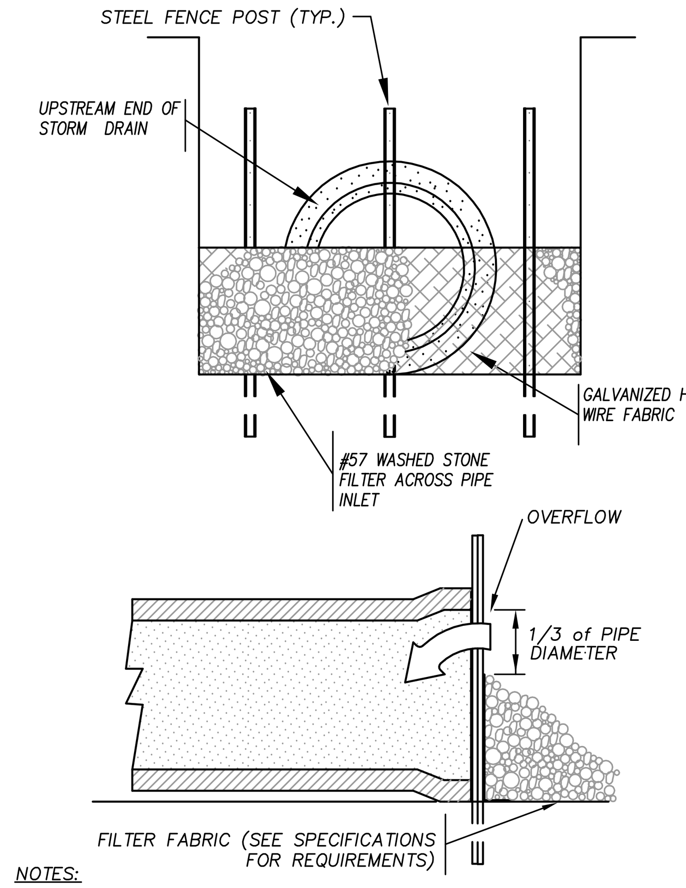

NOTES:
1. ALL OPEN STORM DRAIN PIPES SHALL BE PROTECTED AFTER STOPPAGE OF WORK EACH DAY AS ILLUSTRATED.
2. ACCUMULATED SEDIMENT SHALL BE REMOVED AND PROPERLY DISPOSED OF AND THE TRENCH BOTTOM REGRADED AND COMPACTED IN ACCORDANCE WITH SPECIFICATIONS PRIOR TO CONTINUANCE OF LAYING PIPE.

TEMPORARY GRAVEL CONSTRUCTION ENTRANCE N.T.S.

NOTES:
1. ENTRANCE(S) SHALL BE LOCATED TO PROVIDE MAXIMUM UTILITY BY ALL CONSTRUCTION VEHICLES.
2. TURNING RADIUS SUFFICIENT TO ACCOMMODATE LARGE TRUCKS IS TO BE PROVIDED.
3. MUST BE MAINTAINED IN A CONDITION WHICH WILL PREVENT TRACKING OR DIRECT FLOW OF MUD ONTO STREETS. PERIODIC TOPDRESSING WITH STONE WILL BE NECESSARY. CONTRACTOR SHALL MAINTAIN AS NECESSARY.
4. ANY MATERIAL WHICH STILL MAKES IT ONTO THE ROAD MUST BE CLEANED UP IMMEDIATELY.
5. FREQUENT CHECKS OF THE ENTRANCE(S) AND TIMELY MAINTENANCE SHALL BE PROVIDED.
6. NOTES ARE APPLICABLE AT ALL POINTS OF INGRESS AND EGRESS UNTIL SITE IS STABILIZED.

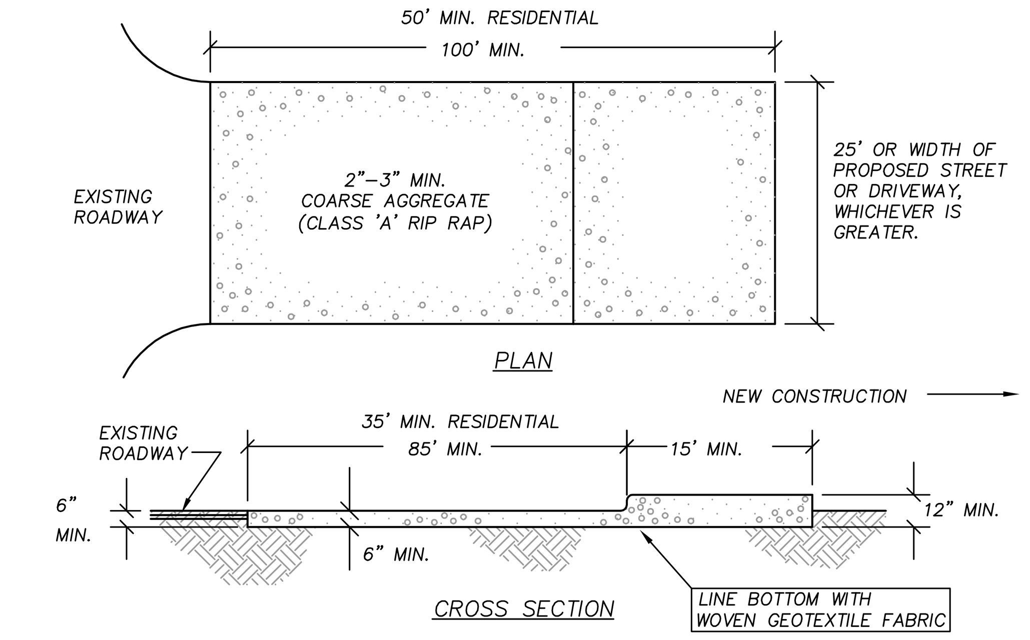

MAINTENANCE NOTES:
1. MAINTAIN THE GRAVEL PAD IN A CONDITION TO PREVENT MUD OR SEDIMENT FROM LEAVING THE SITE.
2. MAY REQUIRE PERIODIC TOP DRESSING WITH 2-INCH STONE.
3. IMMEDIATELY REMOVE ALL OBJECTIONABLE MATERIALS SPILLED, WASHED OR TRACKED ONTO PUBLE ROADWAYS.

TEMPORARY REINFORCED SILT FENCE OUTLET N.T.S.

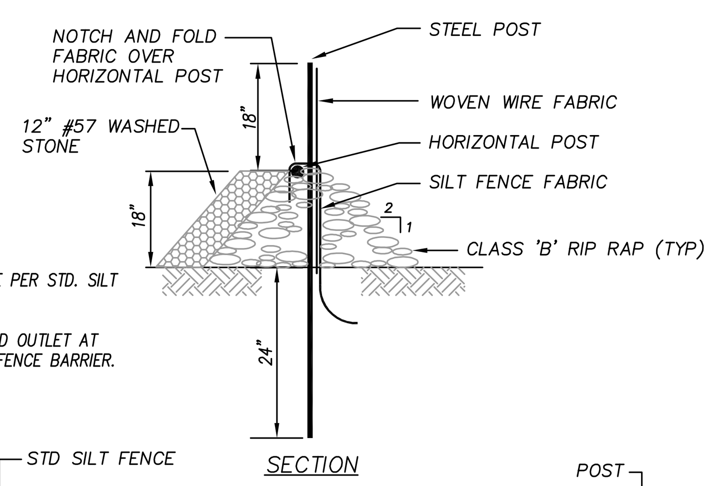

NOTES:
1. INSTALL SILT FENCE PER STD. SILT FENCE DETAIL.
2. LOCATE REINFORCED OUTLET AT LOW POINTS OF SILT FENCE BARRIER.

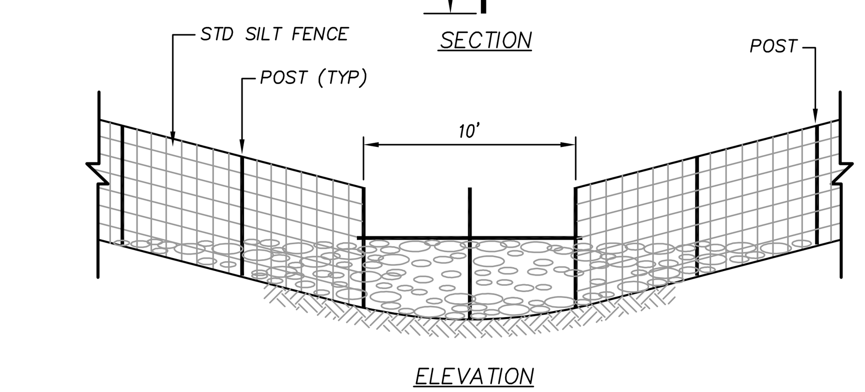

MAINTENANCE NOTES:
1. REMOVE SEDIMENT DEPOSITS AS NECESSARY TO PROVIDE ADEQUATE STORAGE VOLUME FOR THE NEXT RAIN AND TO REDUCE PRESSURE ON THE FENCE/OUTLET. TAKE CARE TO AVOID UNDERMINING THE FENCE DURING CLEANOUT. REMOVE & REPLACE STONE AS NECESSARY AS IT BECOMES CLOGGED WITH SEDIMENT.

REMOVE ALL FENCING MATERIALS AND UNSTABLE SEDIMENT DEPOSITS AND BRING THE AREA TO
2. GRADE AND STABILIZE IT AFTER THE CONTRIBUTING DRAINAGE AREA HAS BEEN PROPERLY STABILIZED.

TEMPORARY CATCH BASIN AND YARD INLET PROTECTION N.T.S.

MAINTENANCE NOTES:
1. INSPECT THE BARRIER AT LEAST WEEKLY AND AFTER EACH SIGNIFICANT RAINFALL AND MAKE REPAIRS AS NEEDED.
2. REMOVE SEDIMENT AS NECESSARY TO PROVIDE ADEQUATE STORAGE VOLUME FOR SUBSEQUENT RAINS.
3. APPROPRIATELY STABILIZE ALL BARE AREAS AROUND THE INLET.

NOTES:
1. PLACE CONCRETE BLOCKS LENGTHWISE ON THEIR SIDES IN A SINGLE ROW AROUND THE PERIMITER OF THE INLET WITH THE ENDS OF ADJACENT BLOCKS ABUTTING. THE HEIGHT OF THE BLOCKS SHALL BE 12".
2. WIRE MESH OR HARDWARE CLOTH SHALL BE PLACED OVER THE OUTSIDE VERTICAL FACE (WEBBING) OF THE BLOCKS, TO PREVENT STONE FROM BEING WASHED THROUGH THE HOLES IN THE BLOCKS.
3. #57 WASHED STONE SHALL BE PILED AGAINST THE WIRE TO THE TOP OF THE BLOCK.
4. MAINTAIN DEVICE AFTER EACH RAIN. REPLACE #57 WASHED STONE IF IT CLOGS W/ SEDIMENT.
5. PLACE 1"x4" BOARDS THROUGH THE HOLES OF CORNER BLOCKS.

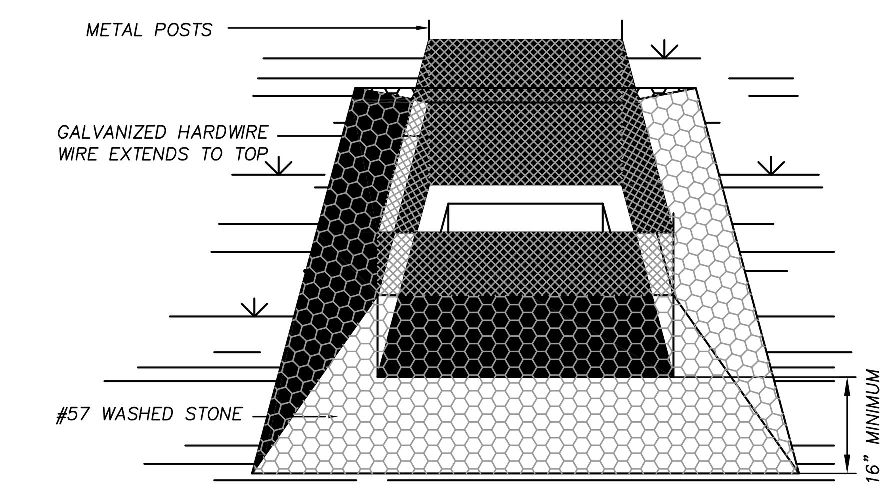

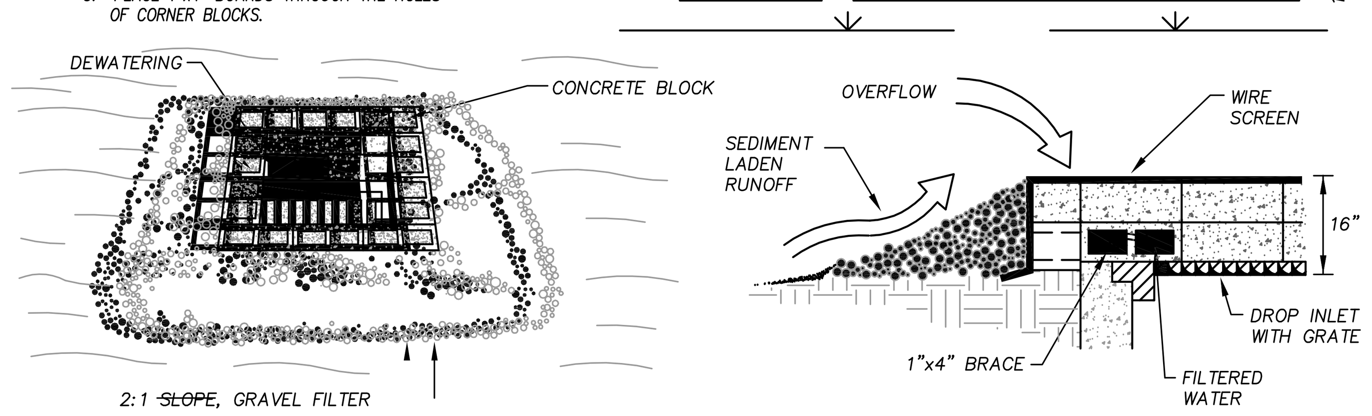

STANDARD TEMPORARY SILT FENCE N.T.S.

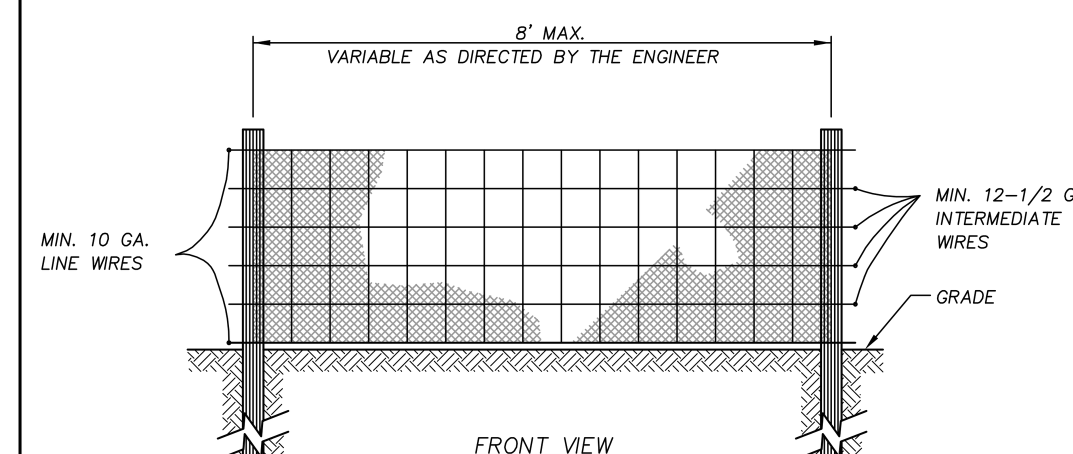

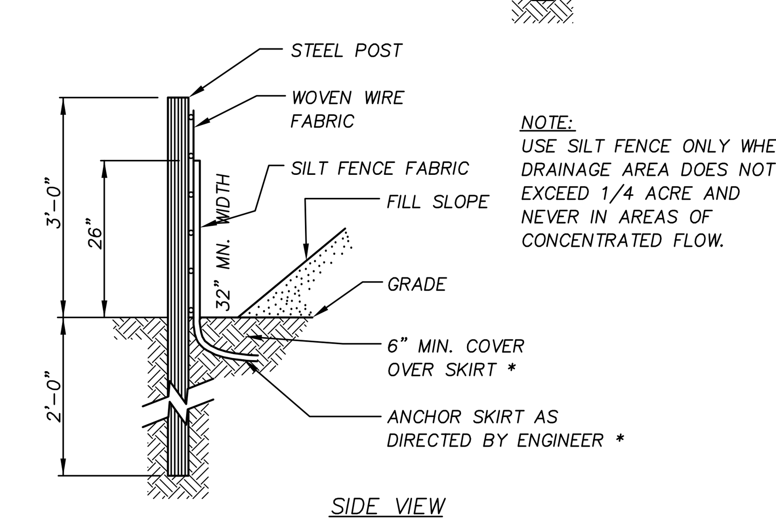

NOTE:
USE SILT FENCE ONLY WHEN DRAINAGE AREA DOES NOT EXCEED 1/4 ACRE AND NEVER IN AREAS OF CONCENTRATED FLOW.

FOR REPAIR OF SILT FENCE FAILURES, USE No. 57 WASHED STONE. FOR ANCHOR WHEN SILT FENCE IS PROTECTING CATCH BASIN.

CONCRETE WASHOUT AREA N.T.S.

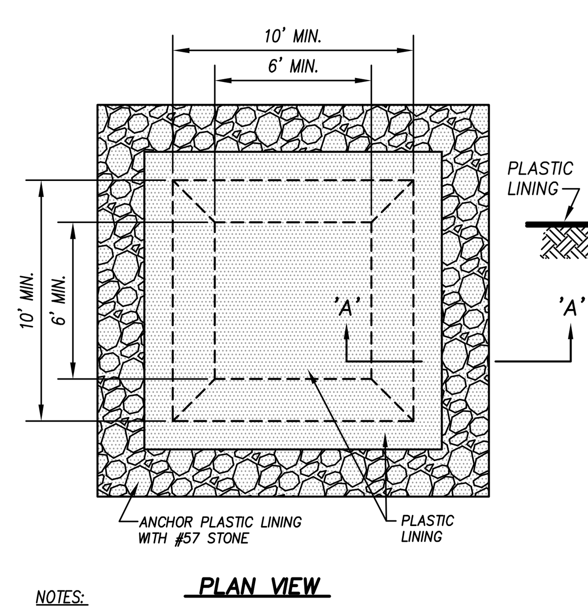

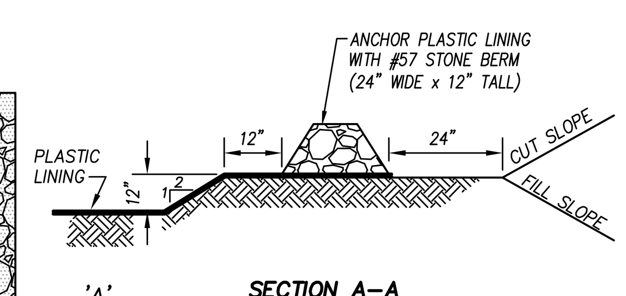

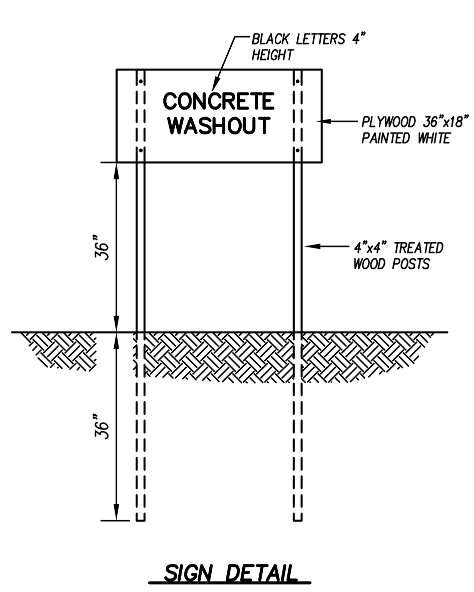

NOTES:
1. LOCATE WASH-OUT AREA IN LOCATIONS SHOWN ON EROSION CONTROL PLAN SHEETS AND AT LEAST 50' FROM OPEN WATERS AND DRAINAGE INLETS.
2. LINE WASH OUT PIT WITH LINER OF 8-MIL LAMINATED PLASTIC GEOTEXTILE FABRIC (DURA-SKRIM 8BW OR APPROVED EQUAL).
3. PROPERLY DISPOSE OF DRIED CONCRETE AND RESTORE AREA TO FINAL GRADES AND SURFACES AT COMPLETION OF CONSTRUCTION.

MAINTENANCE NOTES:
1. INSPECT AREA REGULARLY AND MAKE REPAIRS PROMPTLY.
2. ENSURE CONCRETE IS BEING CAPTURED AND LINER REMAINS ANCHORED.
3. REMOVE DRIED CONCRETE AND RESTORE PIT BEFORE CAPACITY IS EXCEEDED.
4. REPLACE OR PATCH IMPERVIOUS LINER THAT BECOMES DAMAGED. RE-ANCHOR LINER AS NEEDED.

CITY OF WILMINGTON OUTLET PROTECTION N.T.S.

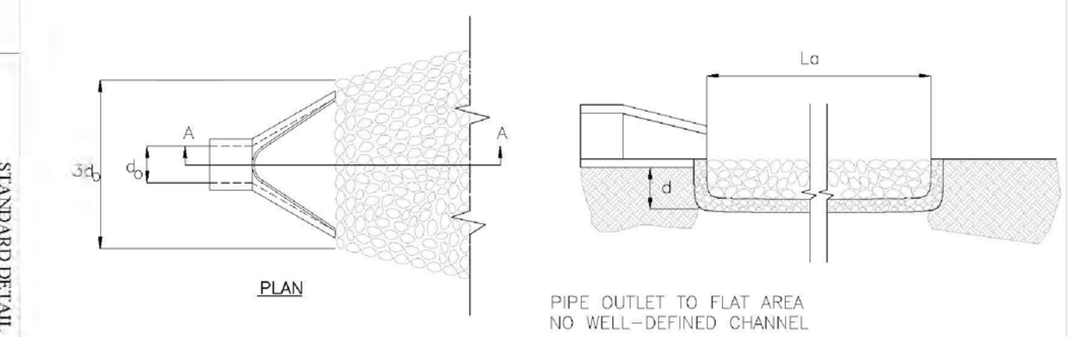

NOTES:
1. La IS THE LENGTH OF THE RIPRAP APRON.
2. d = 1.5 TIMES THE MAXIMUM STONE DIAMETER BUT NOT LESS THAN 6".
3. IN A WELL – DEFINED CHANNEL EXTEND THE APRON UP THE CHANNEL BANKS TO AN ELEVATION OF 6" ABOVE THE MAXIMUM TAILWATER DEPTH OR TO THE TOP OF THE BANK, WHICHEVER IS LESS.
4. A FILTER BLANKET OR FILTER FABRIC SHOULD BE INSTALLED BETWEEN THE RIPRAP AND SOIL FOUNDATION.

STANDARD DETAIL		
DATE: 2001 DRAWN BY JSR/CMR CHECKED BY B.P., P.E. SCALE NOT TO SCALE	PIPE OUTLET PROTECTION	CITY OF WILMINGTON NORTH CAROLINA CITY OF WILMINGTON ENGINEERING PO BOX 1810 WILMINGTON, NC 28402 (910) 341-7807 SD 2-15

CITY OF WILMINGTON NORTH CAROLINA
Public Services • Engineering Division
APPROVED STORMWATER MANAGEMENT PLAN
Date: ________ Permit # ________
Signed: ________

APPROVED CONSTRUCTION PLAN	NAME	DATE
PLANNING		
TRAFFIC		
FIRE		

bmh
BOWMAN MURRAY HEMINGWAY
ARCHITECTS
514 Market Street
Wilmington, NC 28401
Tel - (910) 762-2621
Fax - (910) 762-8506

Project ID # 900-9005

CLH DESIGN, PA
400 Regency Forest Dr. Suite 120
Cary, NC 27518
Phone: 919.319.6716
Fax: 919.319.7516
LA: C-106 PE: C-1595

NORTH CAROLINA PROFESSIONAL ENGINEER SEAL 23953 KENNETH A. LORING 3-14-16

Renovations and Additions to:
John T. Hoggard High School
4305 Shipyard Blvd.
Wilmington, North Carolina 28403

CONSTRUCTION DOCUMENTS: 4-1-2016

JOB NUMBER	15-120
DRAWN BY	JGM
CHECKED BY	JGM
DATE	APRIL 1, 2016
REVISIONS	

SITE/CIVIL DETAILS

SHEET NUMBER
C7.1

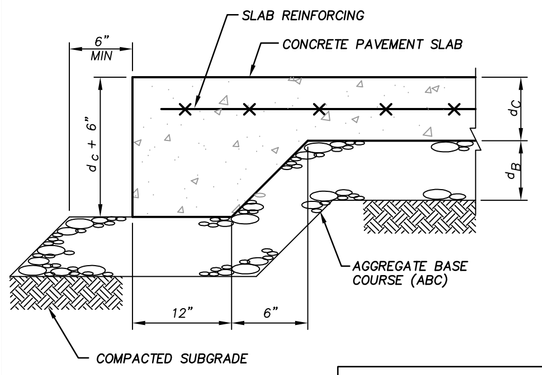

TYPICAL THICKENED EDGE
NTS

CONCRETE PAVEMENT DIMENSIONS	
CONC SLAB THICKNESS, d_C =	6"
ABC THICKNESS, d_B =	6"
REINFORCEMENT =	6x6–W2.9xW2.9 OR FIBER (SEE SPECS)

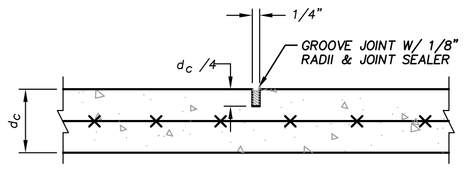

TYPICAL CONTROL JOINT
NTS

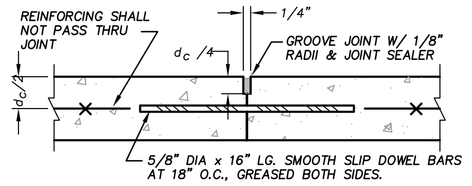

TYPICAL CONSTRUCTION JOINT
NTS

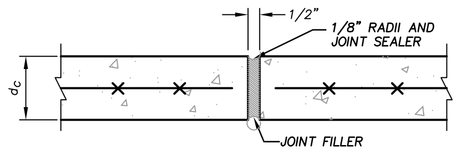

TYPICAL EXPANSION JOINT
NTS

NOTES:

1. ALL CONCRETE SHALL HAVE A 28-DAY COMPRESSIVE STRENGTH OF 4000 PSI (ASTM C39).
2. CONTRACTION JOINTS SHALL BE SPACED AT 15 FT O.C.E.W. MAX. OR AS INDICATED ON THE PLAN.
3. EXPANSION JOINTS SHALL BE SPACED AT 50 FT O.C.E.W. MAX. OR AS INDICATED ON THE PLAN AND WHERE CONCRETE PAVEMENT ABUTS ANY RIGID OBJECT.

CONCRETE PAVEMENT N.T.S.

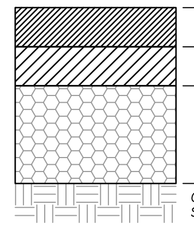

	HEAVY DUTY	LIGHT DUTY	ASPHALT OVERLAY*
TYPE SF-9.5A SURFACE COURSE	2.5-IN	1.5-IN	1.5-IN
TYPE I-19.0B BINDER COURSE	–	–	2.5-IN
AGGREGATE BASE COURSE	6-IN	6-IN	–

REFER TO DETAIL SHEET C7.3 FOR PAVEMENT WEDGING DETAIL

*OVERLAY NOTES:

1. MILL 1/2-IN.
2. REPLACE AREAS W/ ALLIGATOR CRACKING/EXCESSIVE DETERIORATION. SEAL ANY CRACKS PER MAN'Y. REQ.
3. PLACE 1/2-IN SAND-MIX ASPHALT LEVELING COURSE PLUS GEO-SYNTHETIC FABRIC (TENSAR GLASSGRID) BENEATH ASPHALT OVERLAY.

NOTES:

1. SEE SPECIFICATIONS FOR PROOFROLLING, COMPACTION & TESTING REQUIREMENTS.
2. DETAIL IS FOR ON-SITE PAVING OPERATIONS ONLY.
3. THE CONTRACTOR MAY CHOOSE TO INSTALL INTERMEDIATE COURSES OF PAVEMENT TO STABILIZE THE SITE DURING CONSTRUCTION AT NO ADDITIONAL COST. THE CONTRACTOR IS REPONSIBLE FOR DETERMINING THE ADEQUATE THICKNESS REQUIRED FOR INTERMEDIATE PAVING. INCREASES IN THE DESIGN PAVEMENT SECTION TO FACILITATE INTERMEDIATE PAVING SHALL BE PROVIDED AT NO ADDITIONAL COST.
4. THE CONTRACTOR SHALL BE RESPONSIBLE FOR REPAIRING ANY DAMAGES TO SUBGRADE, INSTALLED BASE COURSE AND/OR INTERMEDIATE PAVING PRIOR TO PLACING SUBSEQUENT PAVEMENT LIFTS AT NO ADDITIONAL COST.
5. THE CONTRACTOR SHALL BE RESPONSIBLE FOR PROTECTING PAVEMENT DURING ALL PHASES OF WORK. THE FINAL SURFACE OF PAVEMENT SHALL BE FREE OF ALL DEFECTS OR DAMAGE.

ASPHALT PAVEMENT N.T.S.

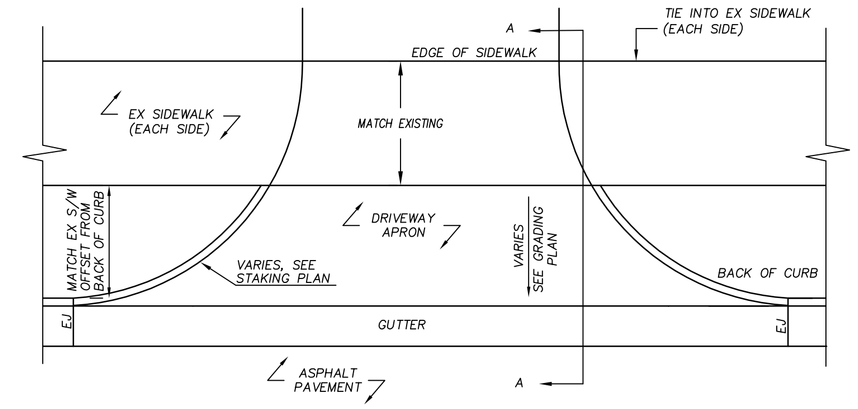

PLAN

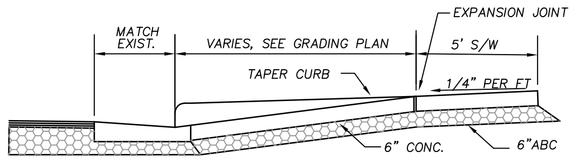

SECTION A–A

NOTES:

1. REFER TO CONCRETE PAVEMENT DETAILS FOR JOINT CONSTRUCTION REQUIREMENTS.
2. CONCRETE FOR DRIVEWAY APRON SHALL BE 3000-PSI MINIMUM.

DRIVEWAY APRON N.T.S.

ALL SIGNS SHALL BE PROVIDED AND INSTALLED IN ACCORDANCE WITH LATEST MANUAL ON UNIFORM TRAFFIC CONTROL DEVICES, NCSBC AND ADA SPECIFICATIONS AND REQUIREMENTS.

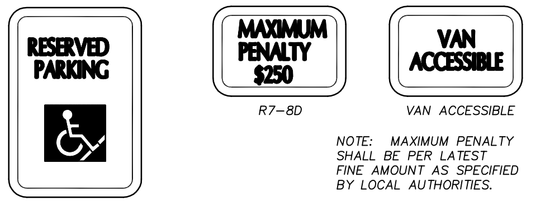

R7-8A R7-8D VAN ACCESSIBLE

NOTE: MAXIMUM PENALTY SHALL BE PER LATEST FINE AMOUNT AS SPECIFIED BY LOCAL AUTHORITIES.

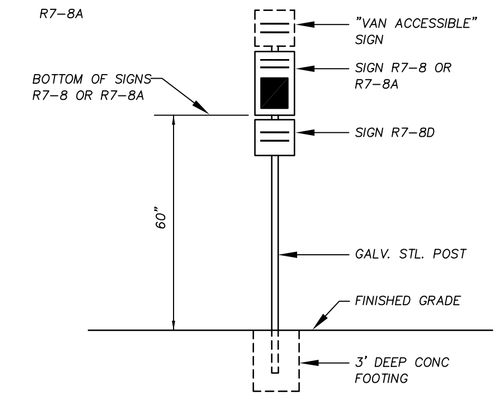

ACCESSIBLE PARKING SIGNAGE N.T.S.

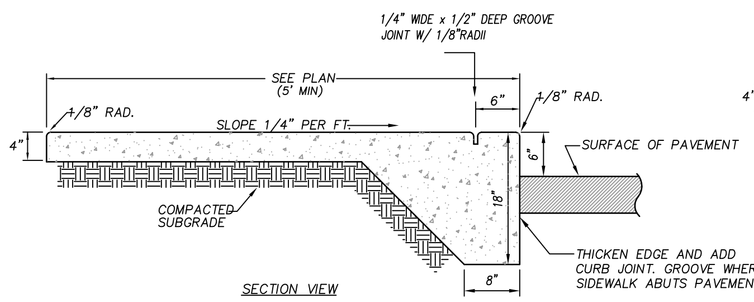

SECTION VIEW

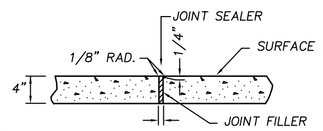

TRANSVERSE EXPANSION JOINT

GENERAL NOTES:

1. A GROOVE JOINT 1" DEEP WITH 1/8" RADII SHALL BE REQUIRED IN THE CONCRETE SIDEWALK AT 5' INTERVALS UNLESS INDICATED OTHERWISE. SEE SPECS FOR ADDITIONAL JOINT SPACING REQUIREMENTS.
2. ONE 1/2" EXPANSION JOINT WILL BE REQUIRED AT 50' INTERVALS.
3. A 1/2" EXPANSION JOINT WILL BE REQUIRED WHERE THE SIDEWALK JOINS ANY RIGID STRUCTURE.
4. ALL CONCRETE SHALL BE 3,000 P.S.I. WITH FIBER REINFORCING.

RAISED CONCRETE SIDEWALK N.T.S.

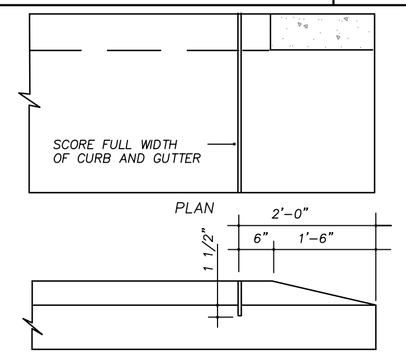

STD METHOD ENDING CURB N.T.S.

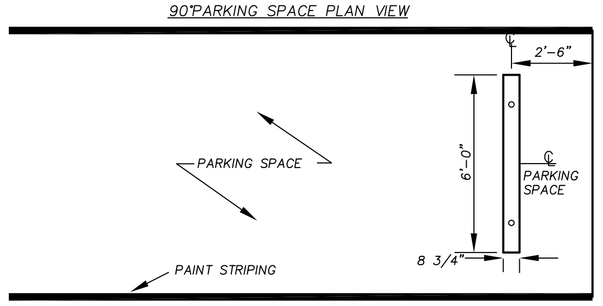

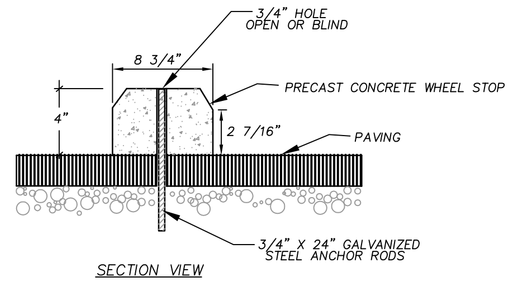

SECTION VIEW

PRE-CAST CONCRETE WHEELSTOP N.T.S.

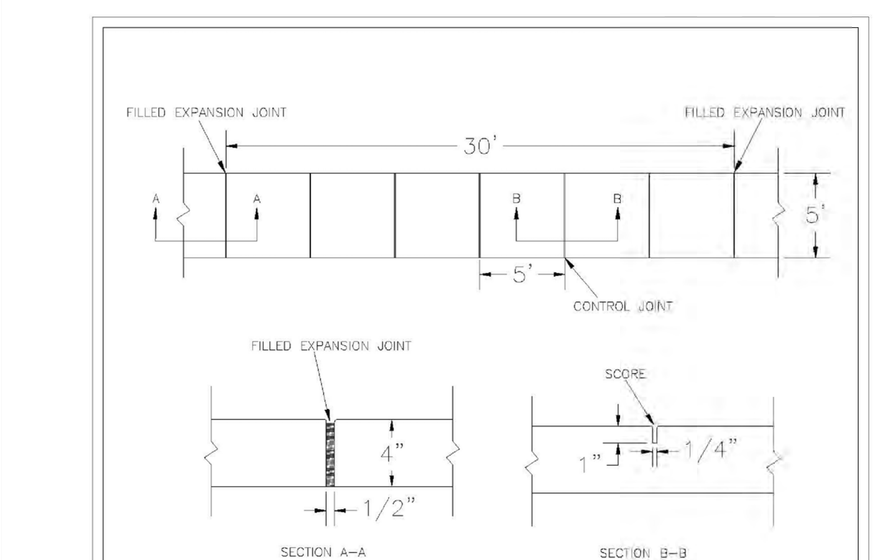

SECTION A–A SECTION B–B

NOTES:

1. JOINT MATERIAL TO COMPLY WITH CURRENT NCDOT STANDARDS.
2. SANITARY SEWER CLEAN-OUTS, WATER METERS, MANHOLES, AND VALVE LIDS TO BE LOCATED OUTSIDE SIDEWALK WHERE FEASIBLE.
3. MINIMUM SIDEWALK WIDTH TO BE 6' MINIMUM IF PLACED AT BACK OF CURB.
4. CONCRETE FOR ALL SIDEWALKS (EXCEPT ANY PORTION CONTAIN WITHIN A DRIVEWAY APRON) SHALL BE CLASS "A" – 3,000 PSI.
5. MINIMUM REPLACEMENT FOR REPAIRS IS A 5' X 5' PANEL
6. 4" STONE BASE MAY BE REQUIRED FOR POOR SOIL CONDITIONS
7. MINIMUM DEPTH FOR TUNNELING BELOW SIDEWALK IS 12"
8. MAX ADJACENT GROUND SLOPE WITHOUT RAILING IS 2:1
9. MIN GRADE FOR PROPER DRAINAGE IS 1% IN AT LEAST 1 DIRECTION. MAX CROSS SLOPE IS 2%. MAX LONGITUDINAL SLOPE IS 8.3%, 10% IF LIMITED BY EXISTING CONDITIONS, OR NO GREATER THAN THE SLOPE OF THE EXISTING ADJACENT ROAD.

STANDARD DETAIL	
DATE: OCTOBER, 2010	SIDEWALK
DRAWN: PB/JSR	
CHECKED: DEC	
SCALE NOT TO SCALE	

CITY OF WILMINGTON NORTH CAROLINA
CITY OF WILMINGTON ENGINEERING
PO BOX 1810
WILMINGTON N.C. 28402
(910) 341-7807
SD 3-10

CITY OF WILMINGTON CONCRETE SIDEWALK N.T.S.

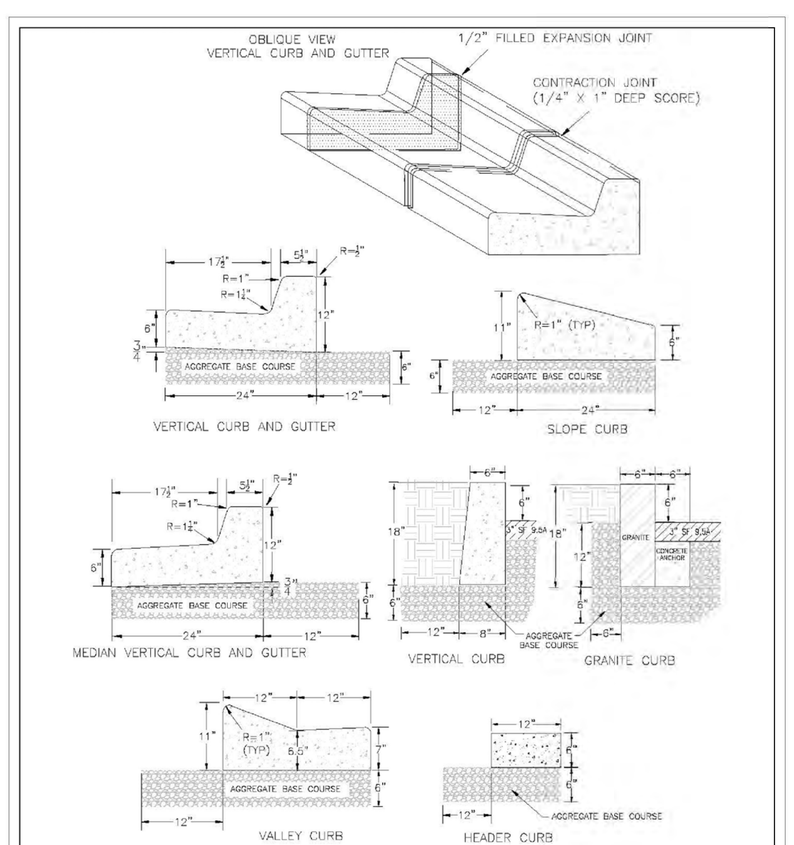

NOTES:
1. EXPANSION JOINT MATERIAL TO COMPLY WITH CURRENT NCDOT STANDARDS
2. 50' MAX EXPANSION JOINT SPACING, 10' MAX CONTRACTION JOINT SPACING
3. MINIMUM INSTALLATION LENGTH IS 5 FT.
4. CONCRETE TO BE 3000 PSI MIN
5. VERTICAL CURB AND GUTTER BASE CAN BE SLOPED 3/4" OR USE A FLAT BASE

STANDARD DETAIL	
DATE: AUGUST, 2011	CURBING
DRAWN: PB/JSR	
CHECKED: DEC	
SCALE NOT TO SCALE	

CITY OF WILMINGTON NORTH CAROLINA
CITY OF WILMINGTON ENGINEERING
PO BOX 1810
WILMINGTON N.C. 28402
(910) 341-7807
SD 3-11

CITY OF WILMINGTON CONCRETE CURB AND GUTTER N.T.S.

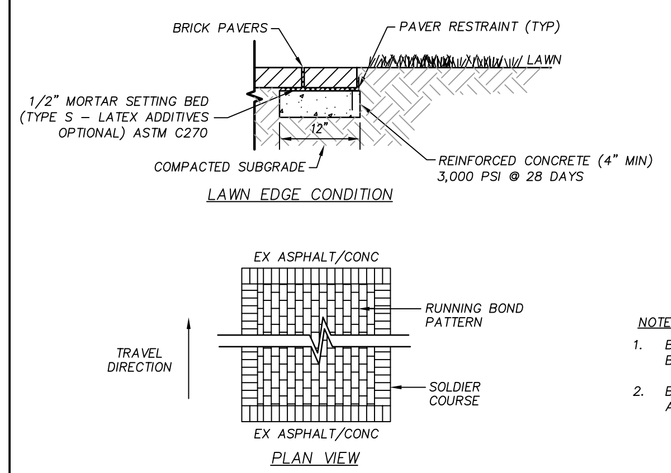

LAWN EDGE CONDITION

PLAN VIEW

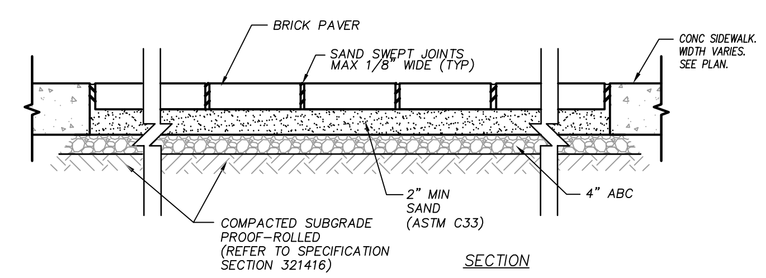

SECTION

NOTES:

1. BRICK PAVERS SHALL MATCH EXISTING TYPE, SIZE, COLOR, AND PATTERN. BRICK PAVERS SHALL TO MATCH COLOR OF BUILDING AND BE SUBMITTED TO ARCHITECT FOR APPROVAL.
2. BRICK PAVER SHALL BE LIGHT-TRAFFIC PAVING BRICK: SOLID BRICK COMPLYING WITH ASTM C902 AND THE FOLLOWING:
   WEATHER CLASS: SX
   TRAFFIC TYPE: I
   APPLICATION: PS

BRICK PAVERS N.T.S.

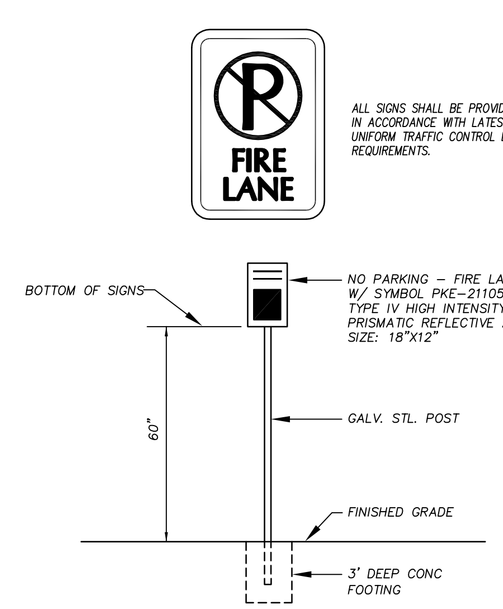

ALL SIGNS SHALL BE PROVIDED AND INSTALLED IN ACCORDANCE WITH LATEST MANUAL ON UNIFORM TRAFFIC CONTROL DEVICES AND NCSBC REQUIREMENTS.

NO PARKING – FIRE LANE SIGNAGE N.T.S.

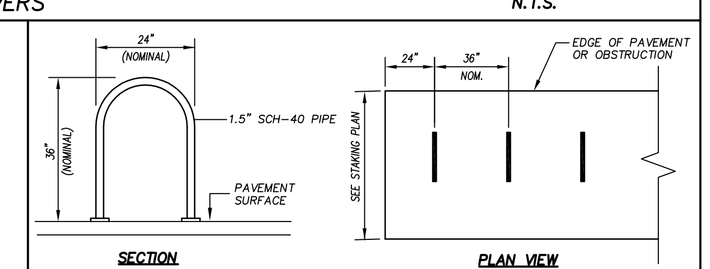

SECTION PLAN VIEW

SPECIFICATIONS

RACKS SHALL BE "HOOP RACK" AS MANUFACTURED BY DERO BIKE RACKS CO. OR APPROVED EQUAL.

MATERIAL: HOOPS SHALL BE 1.9" DIA, SCH-40, 16-GA STEEL PIPE. ALL SURFACES SHALL BE POWDER-COATED WITH ZINC-RICH EPOXY PRIMER. COLOR: BLACK.

QUANTITIES SHOWN ON SITE PLAN REPRESENT NUMBER OF HOOPS. RACK CAPACITY EQUALS 2 BIKES PER LOOP.

RACKS TO BE SURFACE MOUNTED PER MANUFACTURER'S INSTRUCTIONS.

CITY OF WILMINGTON NORTH CAROLINA
Public Services • Engineering Division
APPROVED STORMWATER MANAGEMENT PLAN
Date:_____ Permit #:_____
Signed:

APPROVED CONSTRUCTION PLAN

	NAME	DATE
PLANNING		
TRAFFIC		
FIRE		

BIKE RACK N.T.S.

BOWMAN MURRAY HEMINGWAY
ARCHITECTS
514 Market Street
Wilmington, NC 28401
Tel - (910) 762-2621
Fax - (910) 762-8506

Project ID # 900-9005

CLH DESIGN, P.A.
400 Regency Forest Dr.
Suite 320
Cary, NC 27518
Phone: 919.319.6716
Fax: 919.319.7516
LA-C-100-PE C-1995

NORTH CAROLINA PROFESSIONAL SEAL 23953 ENGINEER KENNETH A. LORING
3-14-16

Renovations and Additions to:
John T. Hoggard High School
4305 Shipyard Blvd.
Wilmington, North Carolina 28403

CONSTRUCTION DOCUMENTS: 4-1-2016

JOB NUMBER	15-120
DRAWN BY	JGM
CHECKED BY	JGM
DATE	APRIL 1, 2016
REVISIONS	

SITE/CIVIL DETAILS

SHEET NUMBER

C7.2

NOTES:

1.) CONCRETE FOR CURB AND GUTTER SHALL BE 3000 PSI @ 28 DAYS.
2.) FORM MUST BE SMOOTH, UNIFORM, AND ACCEPTABLE TO PROJECT DESIGNER.
3.) REFER TO PLANS FOR LENGTH.

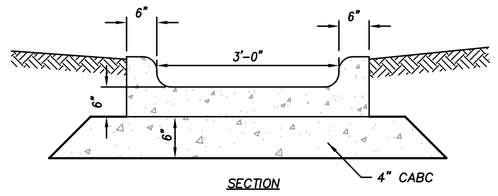

CONCRETE CURB FLUME N.T.S.

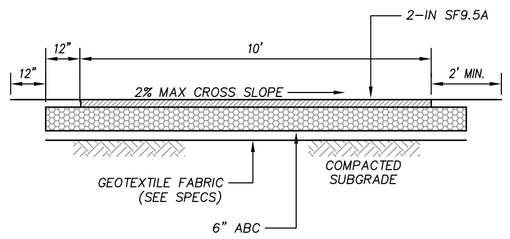

NOTES:

1. SLOPE DIRECTION VARIES, REFER TO PLANS.
2. CONTRACTOR RESPONSIBLE FOR RE-ESTABLISHING ALL AREAS DISTURBED DURING CONSTRUCTION.
3. GREENWAY TRAIL SHALL BE PER CITY OF WILMINGTON STANDARDS.

GREENWAY PATH DETAIL N.T.S.

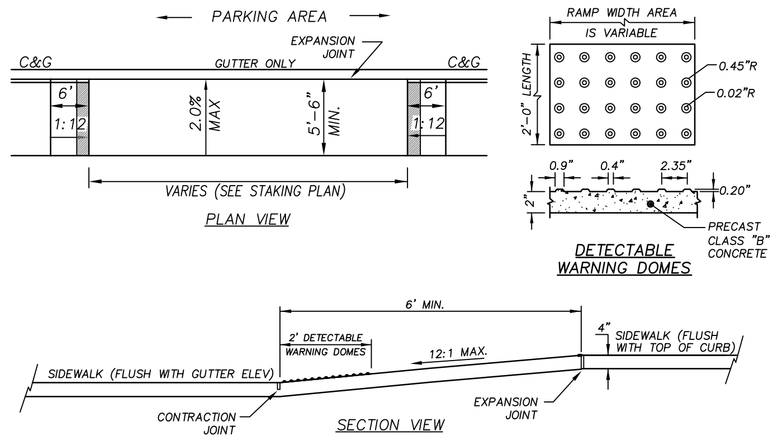

NOTES:

1. DETECTABLE WARNING DOMES SHALL COVER 2'-0" LENGTH AND FULL WIDTH OF THE RAMP FLOOR AS SHOWN ON THE DETAILS.
2. REFER TO NCDOT STANDARD DETAIL 848D05 FOR ADDITIONAL INFORMATION.
3. ALL CONCRETE SHALL BE 3,000 P.S.I. WITH FIBER REINFORCING.
4. ONE 1/2" EXPANSION JOINT WILL BE REQUIRED AT 50' INTERVALS.

ACCESSIBLE PARKING CURB RAMPS N.T.S.

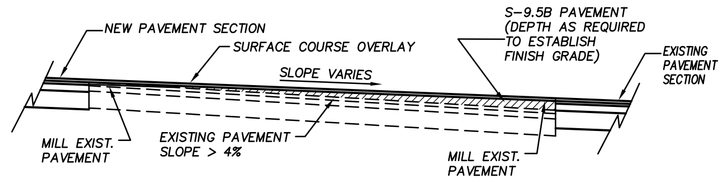

PAVEMENT WEDGING DETAIL N.T.S.

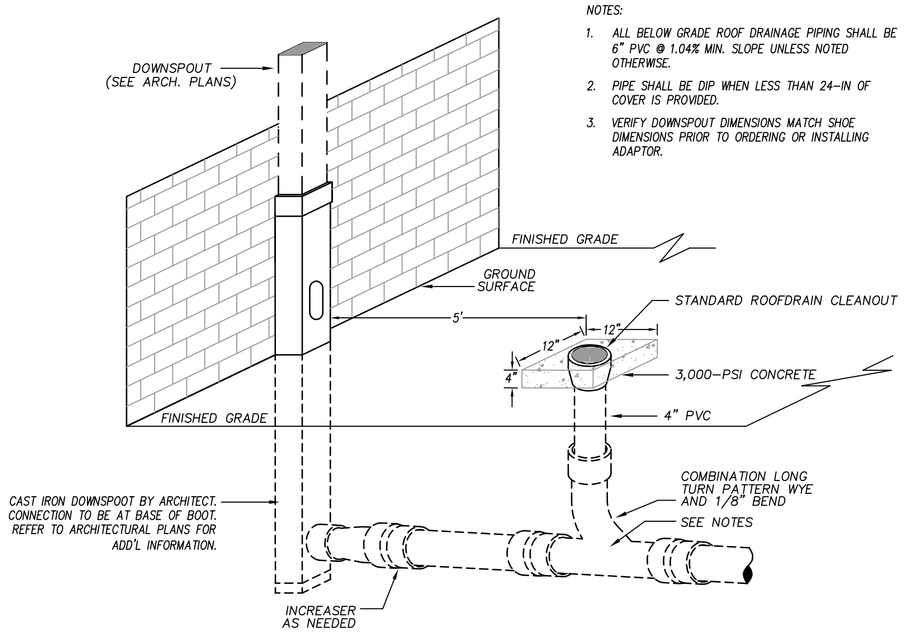

NOTES:

1. ALL BELOW GRADE ROOF DRAINAGE PIPING SHALL BE 6" PVC @ 1.04% MIN. SLOPE UNLESS NOTED OTHERWISE.
2. PIPE SHALL BE DIP WHEN LESS THAN 24-IN OF COVER IS PROVIDED.
3. VERIFY DOWNSPOUT DIMENSIONS MATCH SHOE DIMENSIONS PRIOR TO ORDERING OR INSTALLING ADAPTOR.

DOWNSPOUT CONNECTION N.T.S.

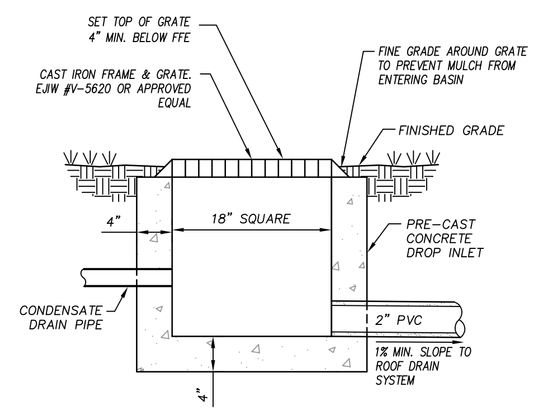

CONDENSATE RELIEF BASIN N.T.S.

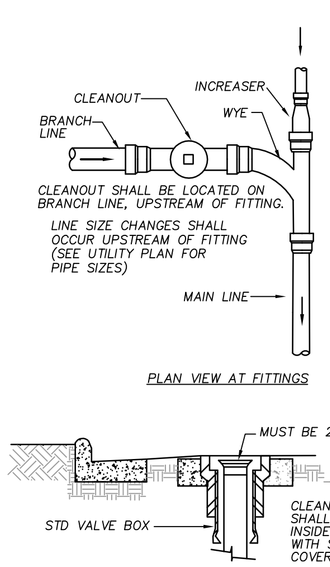

NOTES:
THE FULL LENGTH OF THE SERVICE DITCH BE COMPACTED IN 6" LAYERS WITH MECHANICAL TAMP.

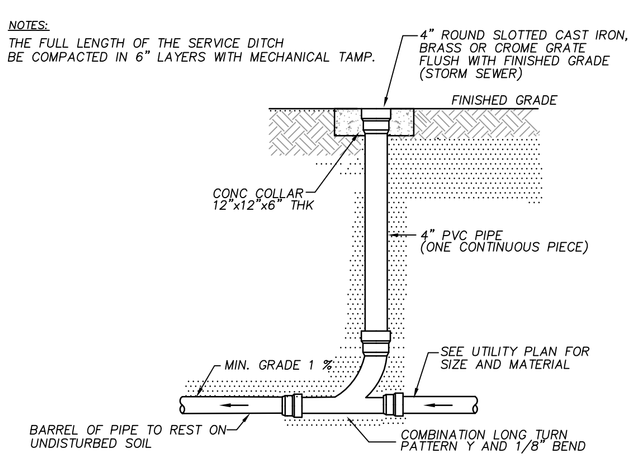

APPROVED CONSTRUCTION PLAN	
NAME	DATE
PLANNING	
TRAFFIC	
FIRE	

CITY OF WILMINGTON NORTH CAROLINA
Public Services • Engineering Division
APPROVED STORMWATER MANAGEMENT PLAN
Date:_____ Permit #_____
Signed: _____

STANDARD CLEANOUT N.T.S.

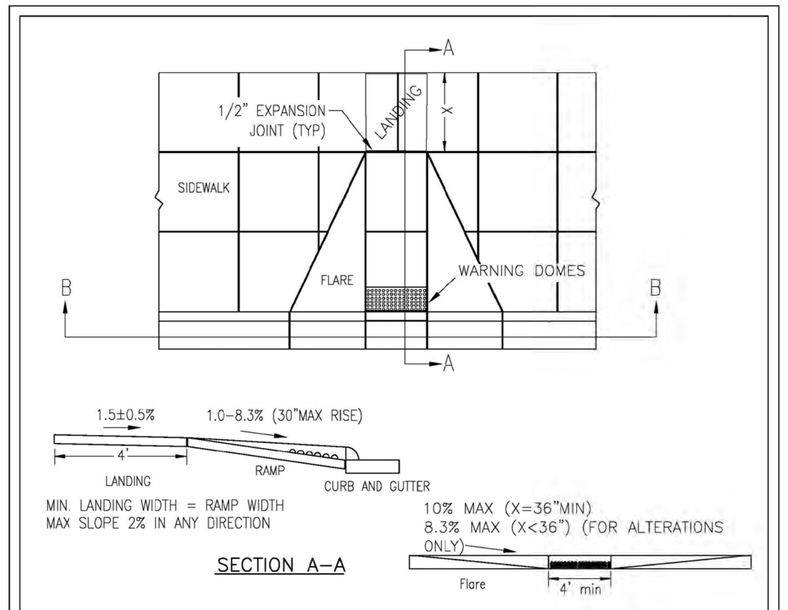

WARNING DOME NOTES:
1. USE CONTRASTING COLORS, RED OR BLACK ON WHITE PAVEMENT.
2. USE CAST IN PLACE PAVERS FOR NEW CONSTRUCTION.
3. RUBBER MATS ARE PERMITTED FOR RETROFITS.
4. LANDING AND RAMP WIDTH MAY BE REDUCED TO 3' WHERE SPACE IS LIMITED AND DESIGN IS APPROVED BY THE CITY ENGINEER.

	STANDARD DETAIL	CITY OF WILMINGTON NORTH CAROLINA
DATE: DECEMBER, 2010	PERPENDICULAR CURB RAMP ADJACENT TO WALKING SURFACE	CITY OF WILMINGTON ENGINEERING PO BOX 1810 WILMINGTON N.C. 28402 (910) 341-7807
DRAWN: PB/JSR		
CHECKED: DEC		SD 3-07
SCALE NOT TO SCALE		

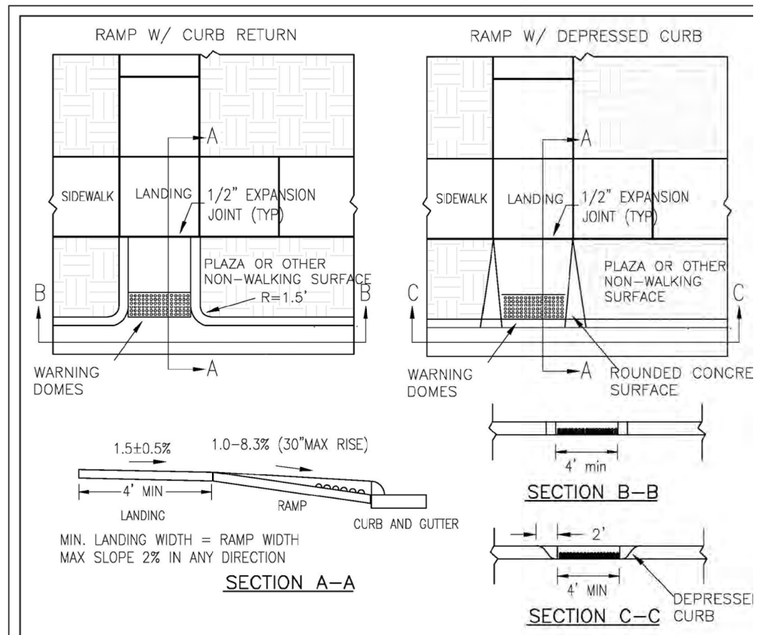

WARNING DOME NOTES:
1. USE CONTRASTING COLORS, RED OR BLACK ON WHITE PAVEMENT.
2. USE CAST IN PLACE PAVERS FOR NEW CONSTRUCTION.
3. RUBBER MATS ARE PERMITTED FOR RETROFITS.
4. LANDING AND RAMP WIDTH MAY BE REDUCED TO 3' WHERE SPACE IS LIMITED AND DESIGN IS APPROVED BY THE CITY ENGINEER.

	STANDARD DETAIL	CITY OF WILMINGTON NORTH CAROLINA
DATE: DECEMBER, 2010	PERPENDICULAR CURB RAMP ADJACENT TO PLAZA	CITY OF WILMINGTON ENGINEERING PO BOX 1810 WILMINGTON N.C. 28402 (910) 341-7807
DRAWN: PB/JSR		
CHECKED: DEC		SD3-08
SCALE NOT TO SCALE		

CITY OF WILMINGTON ACCESSIBLE PARKING CURB RAMPS N.T.S.

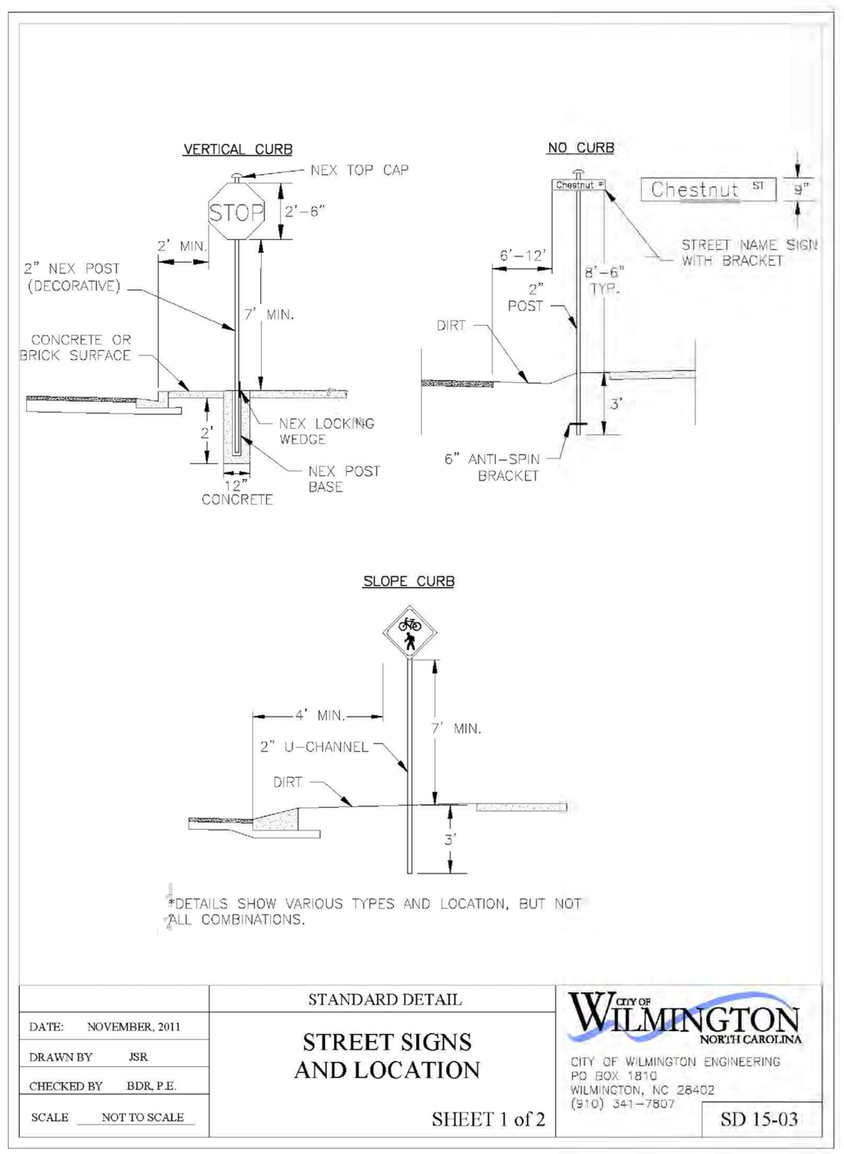

	STANDARD DETAIL	CITY OF WILMINGTON NORTH CAROLINA
DATE: NOVEMBER, 2011	STREET SIGNS AND LOCATION	CITY OF WILMINGTON ENGINEERING PO BOX 1810 WILMINGTON, NC 28402 (910) 341-7807
DRAWN BY JSR		
CHECKED BY BDR, P.E.		SD 15-03
SCALE NOT TO SCALE	SHEET 1 of 2	

SIGNS

1. All signs shall meet the requirements of MUTCD and City Traffic Engineering in effect at the time of construction.

2. All Traffic Control Signs including multi-use paths shall be fabricated with 0.080 inch aluminum blanks using high intensity prismatic reflective sheeting Type IV or better. STOP signs shall be a minimum of 30"x30".

3. SPECIAL DESIGNATION signs by location and type shall adhere to City of Wilmington signage plan (ie. downtown, historic, cross-city trail, parks, riverfront, scenic by-way, parking, etc.) and all associated policies.

4. POST MOUNTED STREET NAME SIGNS shall be fabricated with 9" extruded aluminum street name sign blanks using a standard cut-out. Minimum sign length is 18" long and increasing in 6" increments to 54" maximum as dictated by the number of letters in the name. The color scheme shall be white letters on a green background without a border. Generally, in the downtown and historic areas or as designated in the City of Wilmington signage plan the background shall be blue and contain a topper.

5. Decorative sign posts shall consist of the NEX sign support system, 2" octagonal tube, 14 gauge, powder coated glossy black and include cap, post, base and wedge.

6. All other sign posts shall be u-channel posts made of galvanized steel with 8' posts 2lbs/ft or 12' posts 3lbs/ft. Galvanized NEX post may be substituted with approval from the City Signs and Markings Engineer.

7. OVERHEAD STREET NAME SIGNS shall be fabricated with 0.080 inch aluminum flat sign blanks 18" in height using a standard cut-out. Sign length will be dictated by the number of letters in the name. For mast-arm type traffic signal supports and other overhead support systems refer to the design plans for maximum sign length.

8. All sign lettering, colors and fonts shall adhere to the MUTCD in effect at the time of construction. Florescent Yellow-Green shall be used on signs, in place of Yellow, when listed as an optional color in the MUTCD. Generally, the font will be FHWA series fonts (Highway Gothic.) Other font types require prior City Signs and Markings Engineer approval .

LOCATION

9. Sign locations depend on the edge of road condition. Generally, signs shall be a minimum 2' from face of a vertical curb, 4' from front of slope face curb, and 6' from edge of pavement without curb. Signs shall not be located more than 12' from any of these locations.

10. Sign posts installed in dirt shall be buried a minimum of 36". Octagonal posts shall utilize an anti-spin device, 6" in length minimum. Sign posts installed in concrete or brick shall utilize a base cast in concrete 24" x 12" diameter.

11. Street name signs shall be installed 8'-6" from the ground to the bottom of the sign. Street name signs co-located with STOP signs shall be installed above the STOP sign. A 6" space shall be maintained between the STOP sign and a Street name sign that is parallel to the STOP sign face. All other signs should be mounted per MUTCD guidelines for Urban Areas.

	STANDARD DETAIL	CITY OF WILMINGTON NORTH CAROLINA
DATE: NOVEMBER, 2011	STREET SIGNS AND LOCATION	CITY OF WILMINGTON ENGINEERING PO BOX 1810 WILMINGTON, NC 28402 (910) 341-7807
DRAWN BY JSR		
CHECKED BY BDR, P.E.		SD 15
SCALE NOT TO SCALE	SHEET 2 of 2	

CITY OF WILMINGTON STREET SIGNS N.T.S.

CONSTRUCTION DOCUMENTS: 4-1-2016

BOWMAN MURRAY HEMINGWAY
ARCHITECTS
514 Market Street
Wilmington, NC 28401
Tel - (910) 762-2621
Fax - (910) 762-8506

Project ID # 900-9005

CLH DESIGN, P.A.
400 Regency Forest Dr.
Suite 120
Cary, NC 27518
Phone: 919.319.6716
Fax: 919.319.7516
LA: C-108 PE: C-1595

NORTH CAROLINA PROFESSIONAL SEAL 23953 ENGINEER KENNETH A. LORING 3-14-16

Renovations and Additions to: John T. Hoggard High School

4305 Shipyard Blvd.
Wilmington, North Carolina 28403

JOB NUMBER	15-120
DRAWN BY	JGM
CHECKED BY	JGM
DATE	APRIL 1, 2016
REVISIONS	

SITE/CIVIL DETAILS

SHEET NUMBER

C7.3

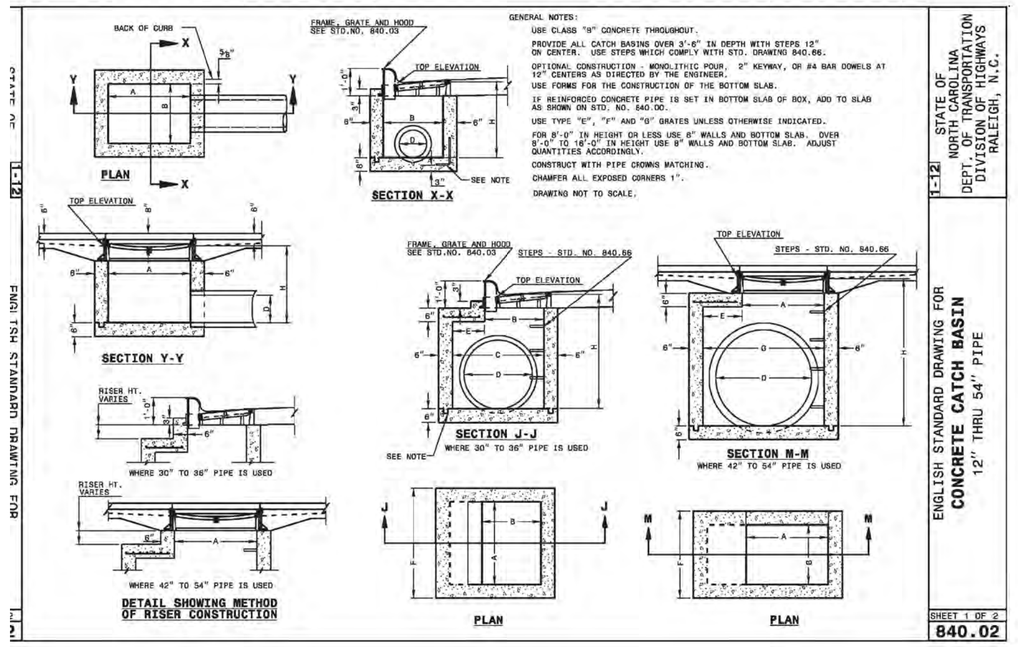

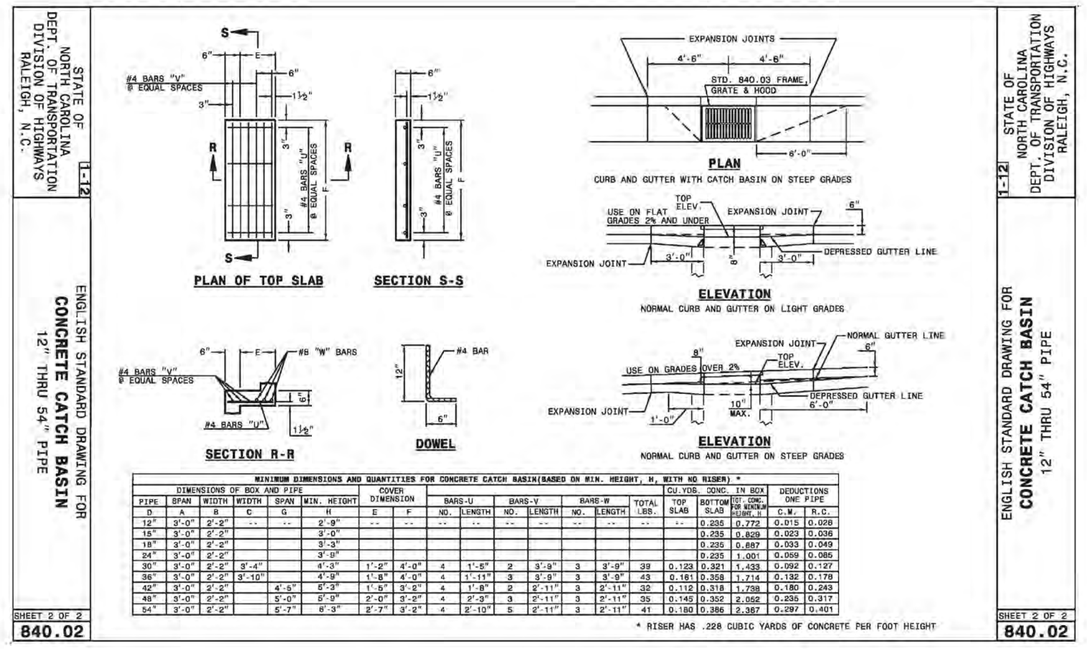

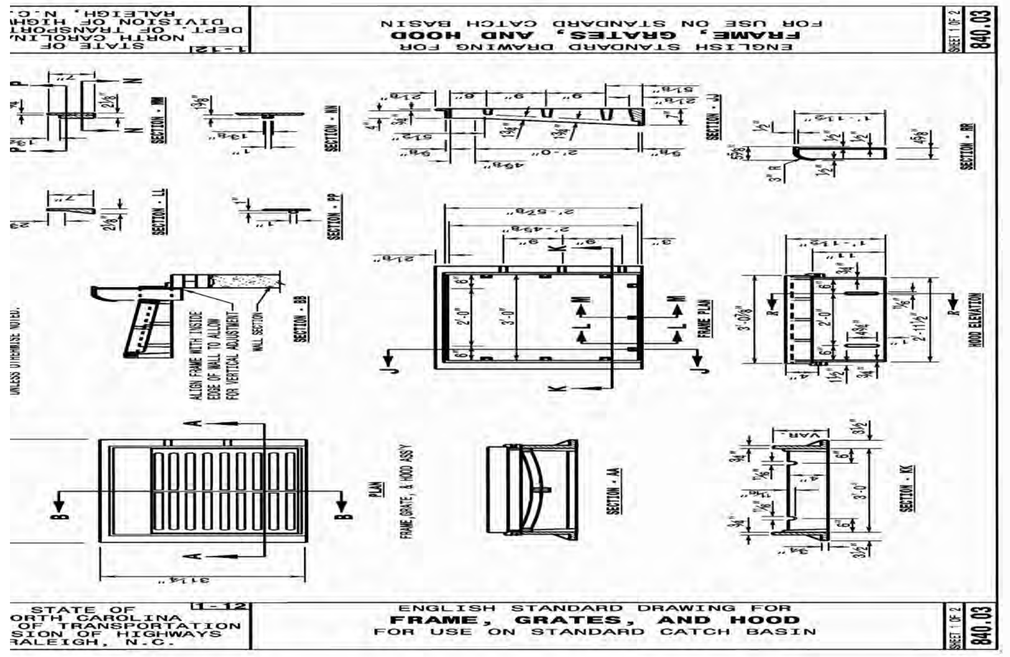

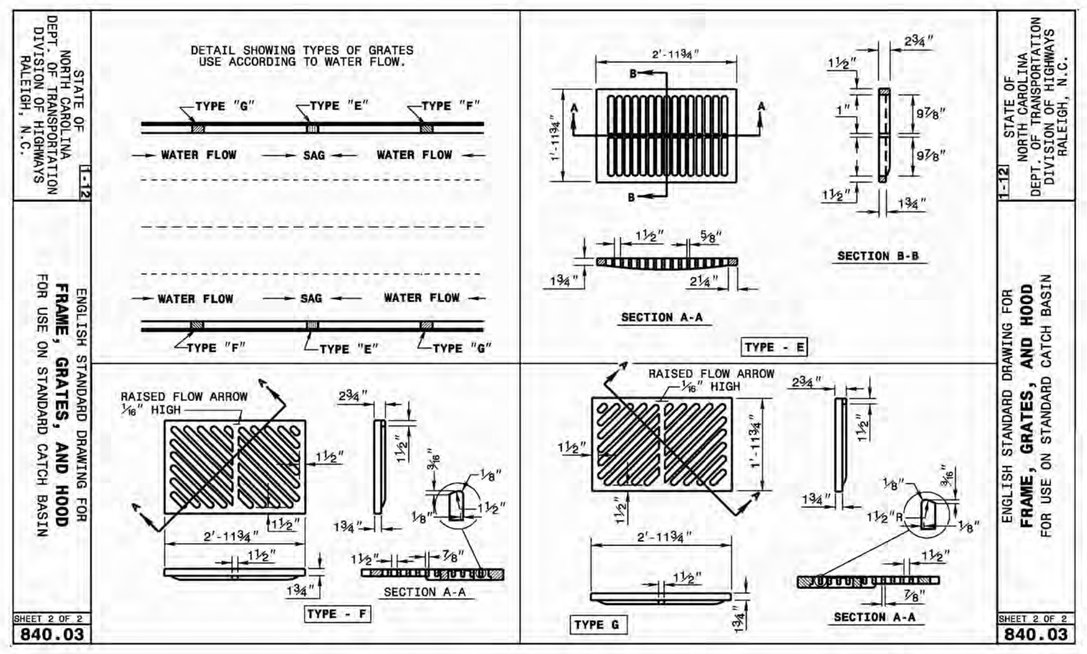

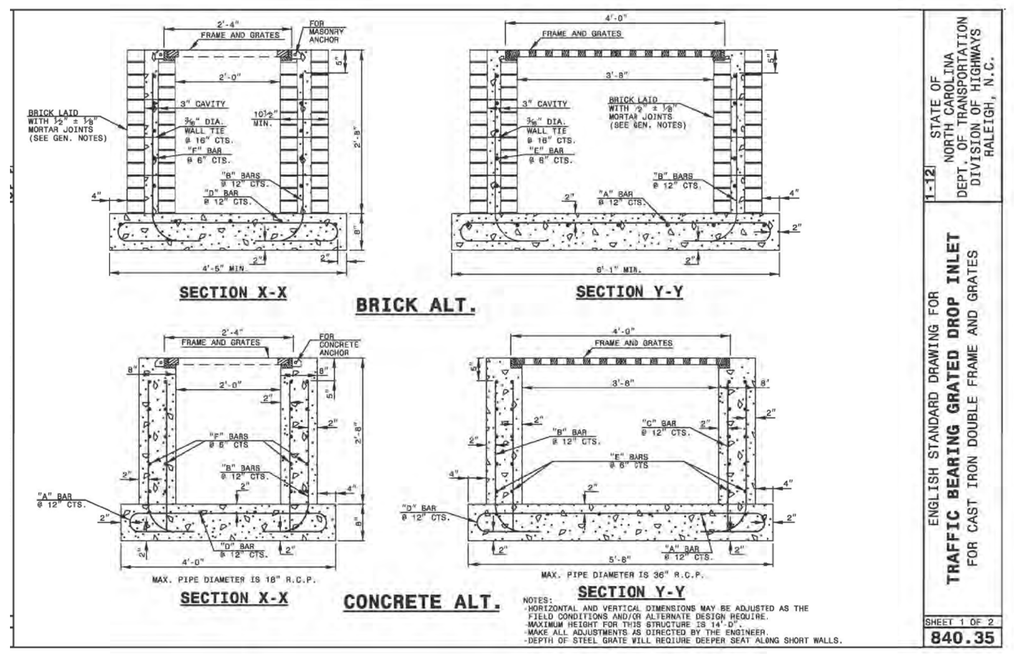

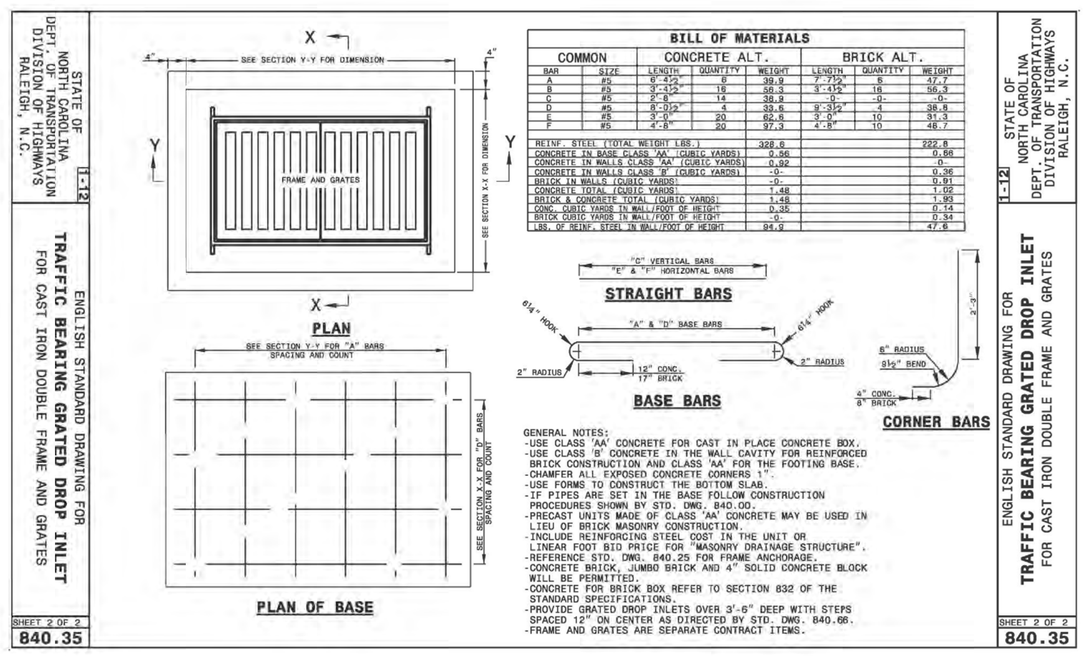

NCDOT STORMWATER DETAILS N.T.S.

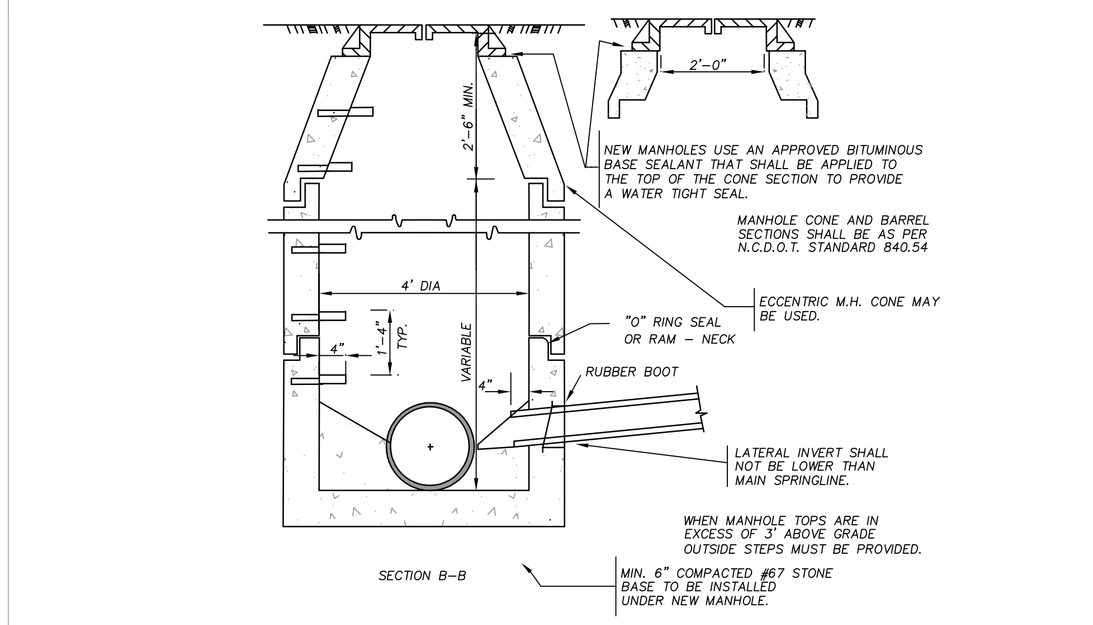

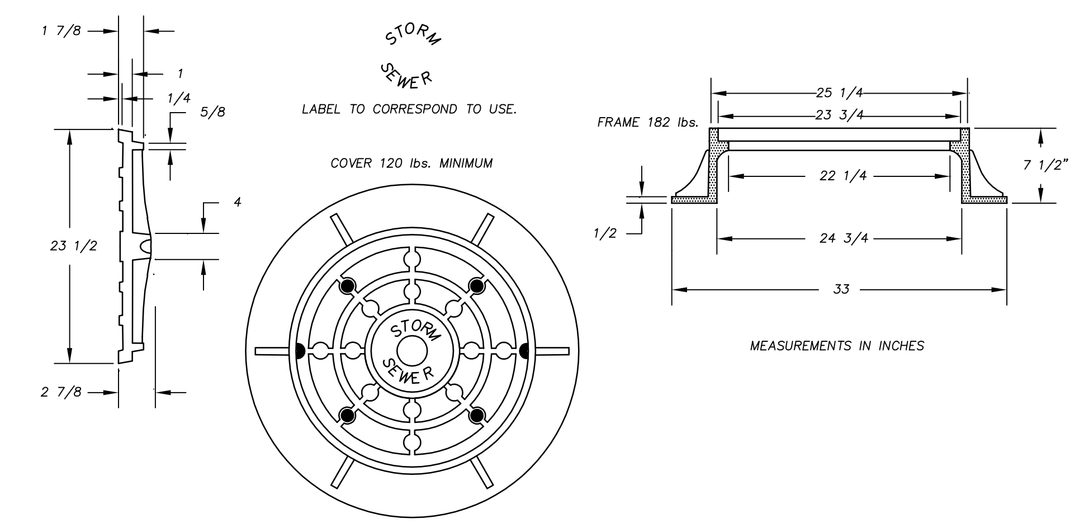

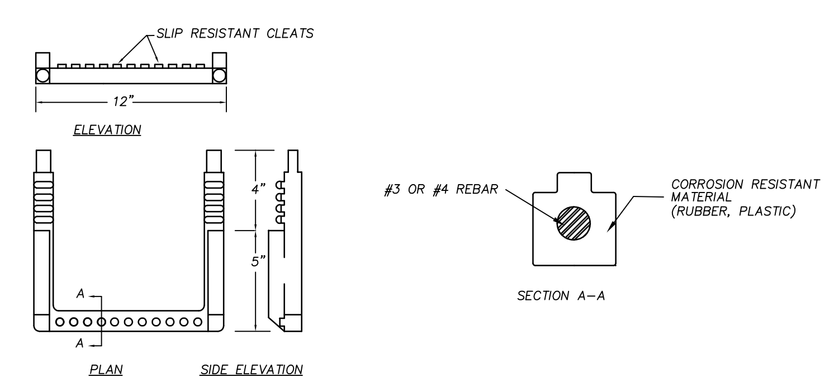

STANDARD PRE–CAST CONCRETE MANHOLE, SLIP RESISTANT STEPS, RING/COVER DETAIL N.T.S.

CITY OF WILMINGTON NORTH CAROLINA
Public Services • Engineering Division
APPROVED STORMWATER MANAGEMENT PLAN
Date:_____ Permit #_____
Signed: _____

APPROVED CONSTRUCTION PLAN	
NAME	DATE
PLANNING	
TRAFFIC	
FIRE	

BOWMAN MURRAY HEMINGWAY ARCHITECTS
514 Market Street
Wilmington, NC 28401
Tel - (910) 762-2621
Fax - (910) 762-8506

Project ID # 900-9005

CLH DESIGN, P.A.
400 Regency Forest Dr.
Suite 120
Cary, NC 27518
Phone: 919.319.6716
Fax: 919.319.7516
LA-C-188 PE-C-1995

NORTH CAROLINA PROFESSIONAL SEAL 23953 ENGINEER KENNETH A. LORING 3-14-16

Renovations and Additions to: John T. Hoggard High School

4305 Shipyard Blvd.
Wilmington, North Carolina 28403

JOB NUMBER	15-120
DRAWN BY	JGM
CHECKED BY	JGM
DATE	APRIL 1, 2016
REVISIONS	

SITE/CIVIL DETAILS

CONSTRUCTION DOCUMENTS: 4-1-2016

SHEET NUMBER

C7.4

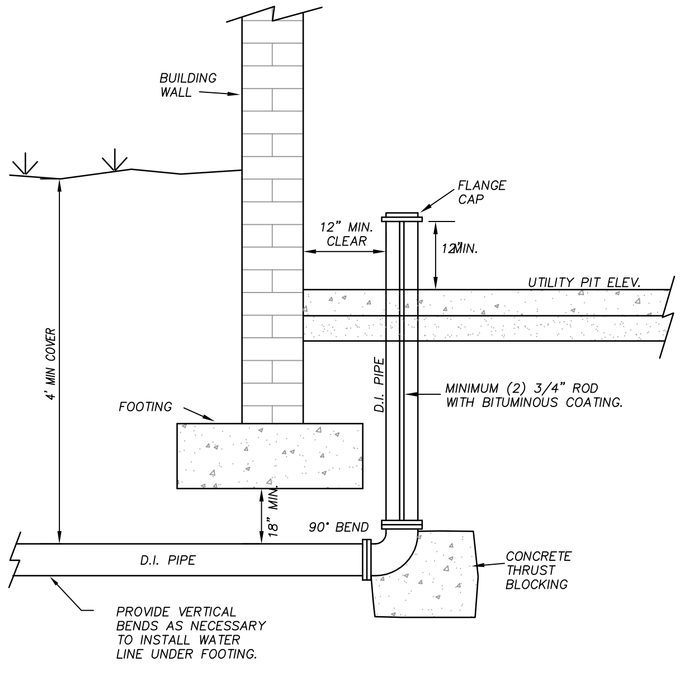

STANDARD FIRE SERVICE INSTALLATION AT BUILDING N.T.S.

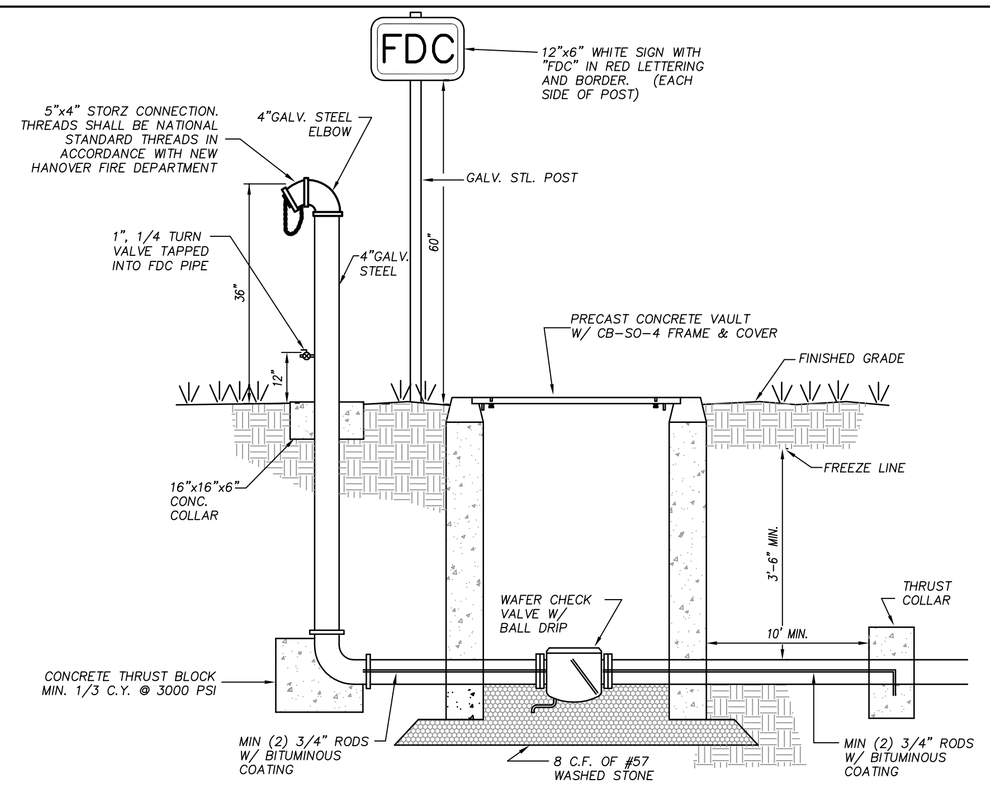

FIRE DEPARTMENT CONNECTION N.T.S.

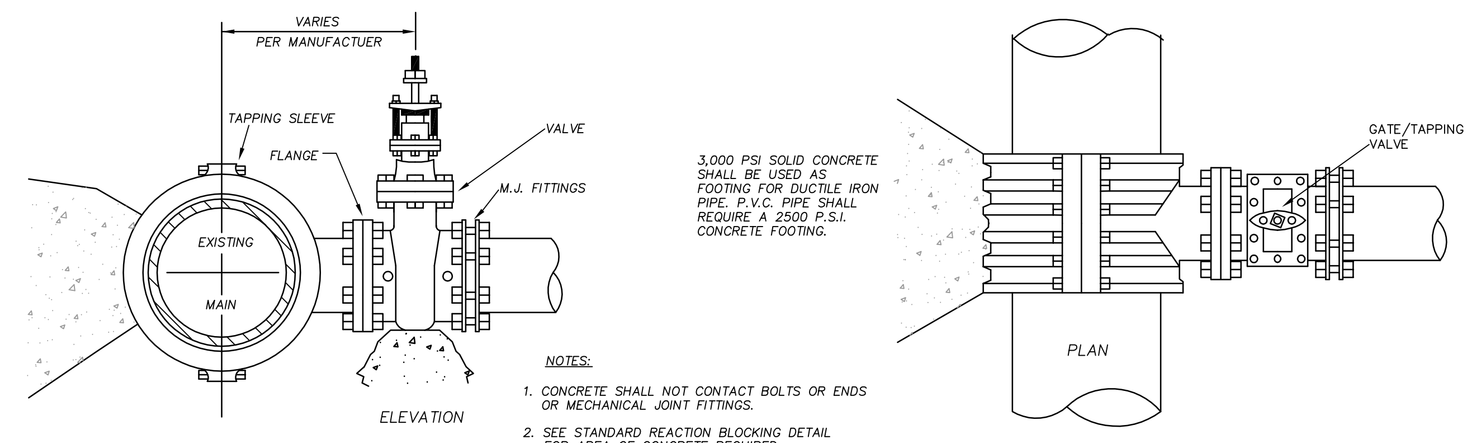

NOTES:

1. CONCRETE SHALL NOT CONTACT BOLTS OR ENDS OR MECHANICAL JOINT FITTINGS.
2. SEE STANDARD REACTION BLOCKING DETAIL FOR AREA OF CONCRETE REQUIRED.

4" – 24" STANDARD TAPPING SLEEVE AND VALVE ASSEMBLY N.T.S.

NOTES:

1. ONCE INSTALLED AND TIGHT, THE STEEL RODS AND BOLTS SHALL BE COATED WITH 2 COATS OF BITUMINOUS BASE PAINT.
2. CONCRETE SHALL NOT CONTACT BOLTS OR ENDS OF MECHANICAL JOINT BENDS.
3. INSTALLATION AND MATERIALS SHALL BE IN ACCORDANCE WITH CITY OF HIGH POINT STANDARDS.

ROD REQUIREMENTS

SIZE OF 45° BEND	STATIC THRUST IN POUNDS	NUMBER OF RODS REQUIRED
6"	4,328	2
8"	7,694	2
12"	17,312	2
16"	30,779	4
20"	48,091	6
24"	69,252	8

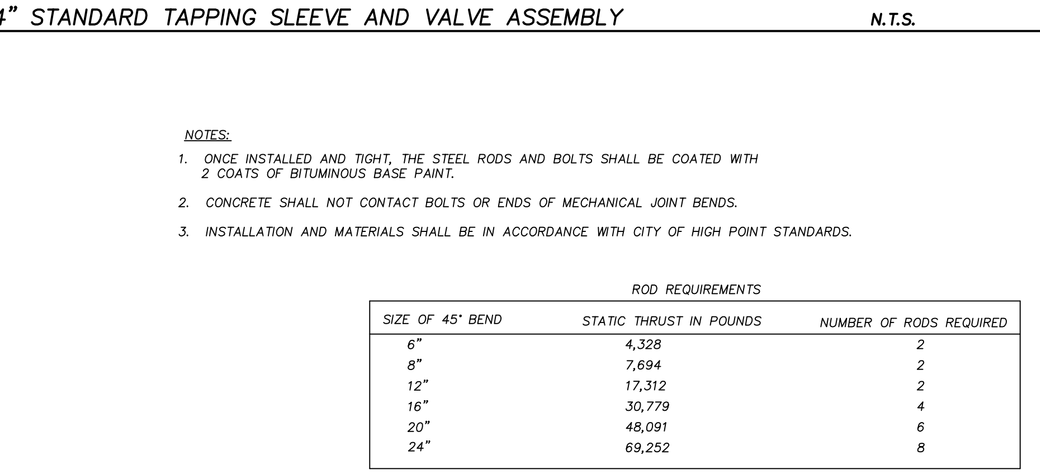

STANDARD VERTICAL BEND N.T.S.

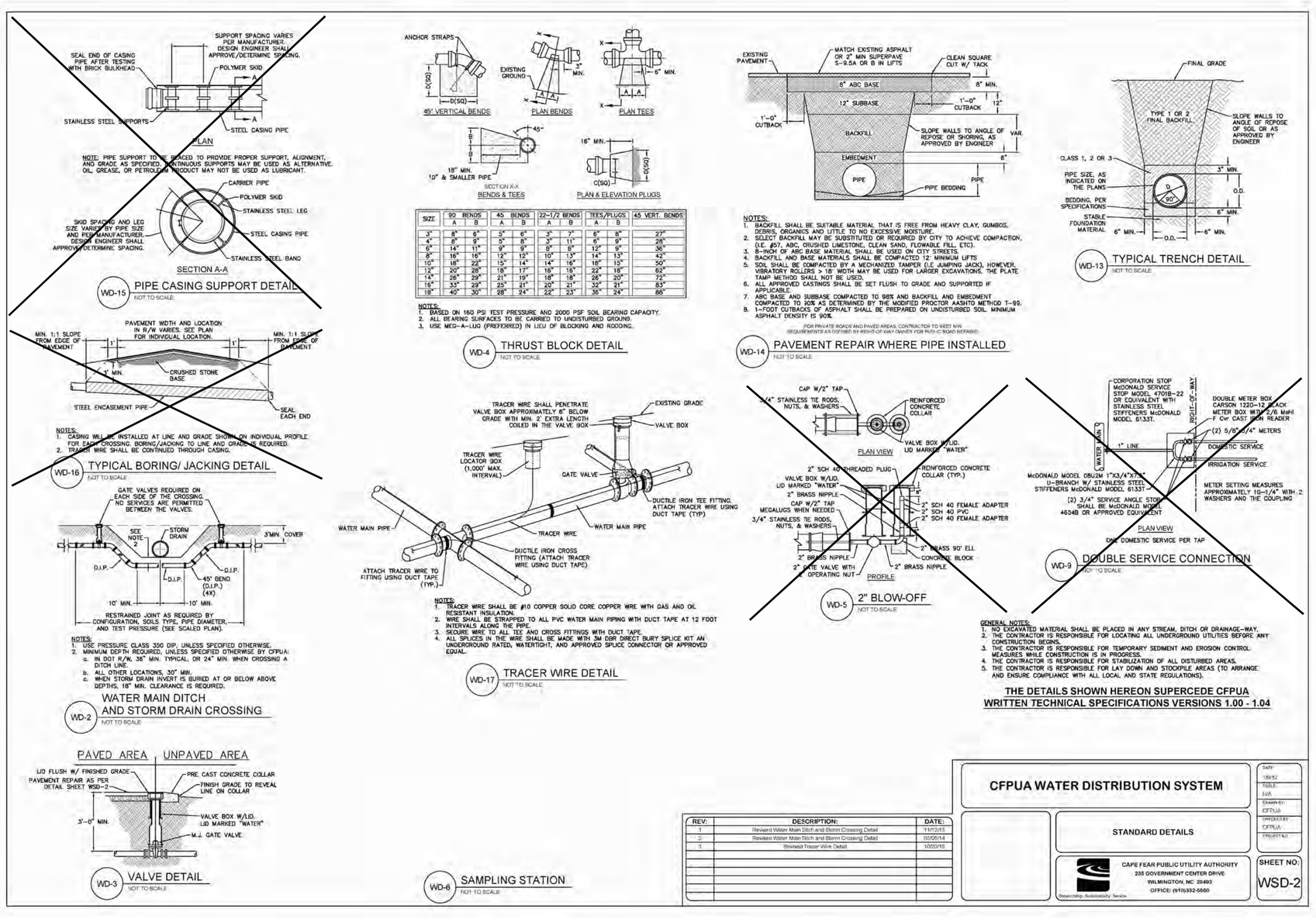

THE DETAILS SHOWN HEREON SUPERCEDE CFPUA WRITTEN TECHNICAL SPECIFICATIONS VERSIONS 1.00 - 1.04

CFPUA STANDARD DETAILS N.T.S.

CITY OF WILMINGTON NORTH CAROLINA
Public Services • Engineering Division
APPROVED STORMWATER MANAGEMENT PLAN
Date:_____ Permit #_____
Signed: _____

APPROVED CONSTRUCTION PLAN

	NAME	DATE
PLANNING		
TRAFFIC		
FIRE		

BOWMAN MURRAY HEMINGWAY
ARCHITECTS
514 Market Street
Wilmington, NC 28401
Tel - (910) 762-2621
Fax - (910) 762-8506

Project ID # 900-9005

CLH DESIGN, P.A.
400 Regency Forest Dr.
Suite 320
Cary, NC 27518
Phone: 919.319.6716
Fax: 919.319.7516
LA-C-100-PE C-1595

NORTH CAROLINA PROFESSIONAL SEAL 23953 ENGINEER KENNETH A. LORING 3-14-16

Renovations and Additions to: John T. Hoggard High School

4305 Shipyard Blvd.
Wilmington, North Carolina 28403

CONSTRUCTION DOCUMENTS: 4-1-2016

JOB NUMBER	15-120
DRAWN BY	JGM
CHECKED BY	JGM
DATE	APRIL 1, 2016
REVISIONS	

SITE/CIVIL DETAILS

SHEET NUMBER

C7.5

1. No plantings over thirty (30) inches in height allowed in vision clearance.
2. Protection from vehicular traffic provided around all landscaping with a minimum height of six (6) inches.
3. Owner is responsible for maintenance to ensure plant material lives and prospers.
4. Planting plans shall be approved by Landscape Designer prior to installation.
5. Landscaping shall be required at the ends of all parking rows.
6. A low buffer shall be required where parking is within fifty (50) feet of the Right-of-Way.
7. Landscaped islands shall be a minimun width of twelve (12) feet (back of curb to back of curb) and a minimum of two hundred and sixteen (216) square feet.
8. A minimum of fifteen (15) trees 2 inches or greater in diameter as measured 6 inches above ground per disturbed acre.
9. For recommended Plant List see "Landscape" T-10.4.

DATE: APRIL, 2008	STANDARD DETAIL	CITY OF WILMINGTON NORTH CAROLINA
DRAWN BY JSR	LANDSCAPE NOTES	CITY OF WILMINGTON ENGINEERING PO BOX 1810 WILMINGTON, NC 28402 (910) 341-7807
CHECKED BY B.P., P.E.		
SCALE NOT TO SCALE		SD 15-14

CITY OF WILMINGTON LANDSCAPE NOTES

N.T.S.

DATE	TYPE	PLANTING RATE
APR 15 – JULY 15 **	HULLED SUNSTAR OR RIVIERA BERMUDA	85 LBS/ACRE *
JULY 15 – AUG 15	SUNSTAR OR RIVIERA BERMUDA SPRIGS	5 BUSHELS/1,000 SF
AUG 15 – APR 15	TEMPORARY SEEDING APPLIES**	

* OR AS REQUIRED TO ACHIEVE 95% COVERAGE AS DETERMINED ON A PER SQUARE YARD BASIS PRIOR TO SUBSTANTIAL COMPLETION.

** WHEN SEEDING MUST TAKE PLACE OUT-OF- SEASON FOR PERMANENT GRASS, APPROPRIATE TEMPORARY SEEDING SHALL BE DONE AND THE CONTRACTOR SHALL BE RESPONSIBLE FOR PERMANENT SEEDING AS SPECIFIED IN SEASON AT NO ADDITIONAL COST TO OWNER.

LAWN MAINTENANCE NOTES:

1. CONTRACTOR SHALL BE RESPONSIBLE FOR LAWN MAINTENANCE UNTIL FINAL COMPLETION.
2. LAWN MUST BE AT 95% COVERAGE AT SUBSTANTIAL COMPLETION REVIEW TO BE ACCEPTED.
3. IF NOT AT 95% SUBSTANTIAL COMPLETION WILL BE DELAYED UNTIL THE FOLLOWING GROWING SEASON.

SUBSTANTIAL COMPLETION (GRASS):

CONTRACTOR SHALL BE RESPONSIBLE FOR LAWN MAINTENANCE AND WATERING UNTIL SUBSTANTIAL COMPLETION. LAWN/TURF SHALL BE CONSIDERED SUBSTANTIALLY COMPLETE WHEN GRASS ESTABLISHMENT IS AT A MIN. 95% COVERAGE AND THE SURFACE COMPLIES WITH THE SLOPE, SMOOTHNESS AND OTHER SPECIFIED TOLERANCES. IF THE MINIMUM REQUIREMENTS ARE NOT MET, SUBSTANTIAL COMPLETION WILL BE DELAYED UNTIL THE MINIMUM REQUIREMENTS ARE MET (POSSIBLY INTO THE FOLLOWING GROWING SEASON). THE CONTRACTOR SHALL BE FULLY RESPONSIBLE FOR WATERING AND MAINTENANCE OF THE GRASS UNTIL SUBSTANTIAL COMPLETION IS REACHED. SEE SPECIFICATIONS FOR FURTHER INFORMATION.

PERMANENT SEEDING SCHEDULE– BERMUDA SEED

PERMANENT OR TEMPORARY GROUND COVER SHALL BE PROVIDED OVER ALL DISTURBED AREAS OF THE SITE AS SOON AS POSSIBLE, HOWEVER, NO LATER 30 DAYS AFTER CONSTRUCTION ACTIVITIES HAVE PERMANENTLY OR TEMPORARILY CEASED DURING ANY PHASE OF WORK.

TEMPORARY OR PERMANENT GROUND COVER SHALL BE PROVIDED ON ALL SLOPES WITHIN 15 WORKING DAYS OR 30 CALENDAR DAYS AFTER CONSTRUCTION ACTIVITIES PERMANENTLY OR TEMPORARILY CEASED.

DATE	TYPE	PLANTING RATE
AUG 15 – FEB 1	TALL FESCUE AND WINTER RYE (GRAIN)	70 LBS/ACRE 25 LBS/ACRE
APR 1 – AUG 15	TALL FESCUE AND GERMAN MILLET *** OR SUDANGRASS (SMALL-STEMMED VAR.) ***	120 LBS/ACRE 25 LBS/ACRE 30 LBS/ACRE

CONSULT CONSERVATION ENGINEER OR SOIL CONSERVATION SERVICE FOR ADDITIONAL INFORMATION CONCERNING OTHER ALTERNATIVES FOR VEGETATION OF DENUDED AREAS. THE ABOVE VEGETATION RATES ARE THOSE WHICH DO WELL UNDER LOCAL CONDITIONS; OTHER SEEDING RATE COMBINATIONS ARE POSSIBLE.

***TEMPORARY – RESEED ACCORDING TO OPTIMUM SEASON FOR DESIRED PERMANENT VEGETATION. DO NOT ALLOW TEMPORARY COVER TO GROW OVER 12" IN HEIGHT BEFORE MOWING.

TEMPORARY SEEDING SCHEDULE

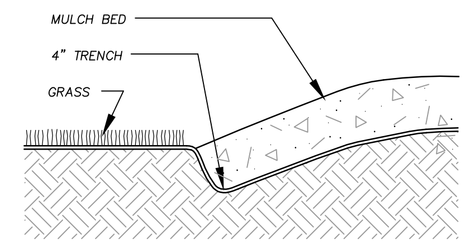

TO BE APPLIED TO ALL PLANTING BEDS

GROUND COVER PLANTING DETAIL

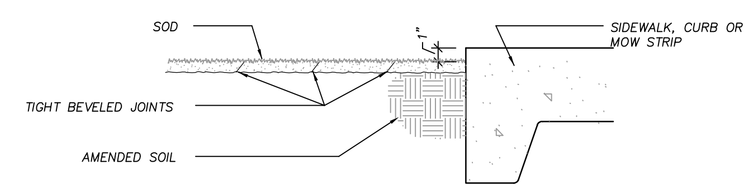

SOD INSTALLATION

SOD INSTALLATION DETAIL

1. LOCATE ALL EXISTING UTILITIES PRIOR TO INSTALLATION OF PLANT MATERIAL. NOTIFY LANDSCAPE ARCHITECT OF ANY DISCREPANCIES BETWEEN FIELD CONDITIONS AND THOSE SHOWN ON THE PLAN.
2. VERIFICATION OF TOTAL QUANTITIES AS SHOWN ON THE PLANT LIST SHALL BE THE RESPONSIBILITY OF THE CONTRACTOR, AND THE TOTAL QUANTITIES SHALL BE AS SHOWN ON THE PLAN.
3. CONTACT THE LANDSCAPE ARCHITECT FOR INSPECTION 48 HOURS IN ADVANCE OF THE SCHEDULED SITE VISIT AND AT THE FOLLOWING INTERVALS:
   - REVIEW OF GRADING PRIOR TO PLANT AND LAWN INSTALLATION
   - REVIEW OF PLANT MATERIAL PRIOR TO INSTALLATION.
   - ONE SUBSTANTIAL COMPLETION MEETING FOR PLANT INSTALLATION.
   - ONE FINAL INSPECTION FOR ALL SEEDING/PLANTING OPERATIONS.
4. ALL PLANT MATERIAL SHALL CONFORM WITH THE STANDARDS SET FORTH BY THE AMERICAN ASSOCIATION OF NURSERYMEN AND THE WRITTEN SPECIFICATIONS.
5. ESTABLISH POSITIVE DRAINAGE IN ALL PLANTING BEDS AND AWAY FROM BUILDING.
6. APPLY PRE-EMERGENT HERBICIDE TO ALL NEW PLANTING BEDS AT MANUFACTURER'S RECOMMENDED RATE PRIOR TO INSTALLATION OF PLANT MATERIAL.
7. DO NOT INSTALL PLANT MATERIAL IN IMPERVIOUS SOILS (i.e. HOLES WHICH WHEN FILLED WITH WATER, DO NOT COMPLETELY DRAIN WITHIN TWO HOURS).
8. LANDSCAPE CONTRACTOR SHALL BE RESPONSIBLE FOR WATERING ALL PLANTS AND LAWN AREAS AT HIS COST FROM HIS OWN WATER SOURCE INCLUDING DURING PERIODS OF DROUGHT UNTIL FINAL COMPLETION. ANY WATERING OR MAINTENANCE REQUIRED AFTER FINAL COMPLETION SHALL BE AT OWNER'S COST.
9. GENERAL CONTRACTOR SHALL BE RESPONSIBLE FOR KEEPING ALL EQUIPMENT & SUBCONTRACTORS AWAY FROM SEEDED AREAS. IF DAMAGE OCCURS, THROUGH NO FAULT OF THE OWNER, AREAS SHALL BE REGRADED AND RESEEDED IMMEDIATELY AT NO ADDITIONAL COST TO THE OWNER. CONTRACTOR SHALL WATER AND MAINTAIN THOSE AREAS UNTIL THEY ARE AT 95% COVERAGE AT SUBSTANTIAL COMPLETION.
10. SUBSTITUTIONS OF PLANT MATERIAL SHALL ONLY BE ACCEPTED 60 DAYS PRIOR TO COMMENCEMENT OF PLANTING OPERATIONS. SUBSTITUTION REQUESTS MUST BE IN WRITING AND WILL ONLY BE ACCEPTED FOR LACK OF AVAILABILITY REASONS WHICH CAN BE SUBSTANTIATED OR FOR SUPERIOR STOCK SUBSTITUTIONS.

SEEDING

11. GENERAL LAWN AREAS SHALL BE SEEDED WITH COMMON BERMUDAGRASS OR APPROVED EQUAL.
12. LANDSCAPE CONTRACTOR SHALL NOTIFY LANDSCAPE ARCHITECT TO REVIEW GRADING ONE WEEK PRIOR TO SEEDING, IF THE LANDSCAPE CONTRACTOR AND LANDSCAPE ARCHITECT FIND GRADING UNACCEPTABLE FOR FINAL SEEDING, LANDSCAPE CONTRACTOR SHALL BRING IT TO THE ATTENTION OF THE GENERAL CONTRACTOR. LANDSCAPE CONTRACTOR SHALL NOT PROCEED WITHOUT APPROVAL BY LANDSCAPE ARCHITECT.

LANDSCAPE NOTES

1. CHISEL ALL CUT GRADED OR COMPACTED AREAS TO A MINIMUM DEPTH OF 8".
2. DISC ALL AREAS TO RECEIVE GRASS TO A MINIMUM OF 8 INCHES, MIX AND AMEND WITH 3 INCHES OF WELL SCREENED TOPSOIL. ON-SITE TOPSOIL MAY BE USED IN PLACE OF IMPORTED TOPSOIL, IF WELL-SCREENED AND DRY PRIOR TO APPLICATION IN ACCORDANCE WITH SPECIFICATION SECTION 329000.
3. REMOVE ALL LOOSE ROCK, ROOTS, AND OTHER OBSTRUCTIONS LEAVING SURFACE REASONABLY SMOOTH AND UNIFORM.
4. APPLY AGRICULTURAL LIME, FERTILIZER, AND PHOSPHATE UNIFORMLY AS PER SPECIFICATIONS AND MIX WELL WITH SOIL.
5. CONTINUE TILLAGE UNTIL A WELL-PULVERIZED, FIRM, REASONABLY UNIFORM SEEDBED IS PREPARED TO A 6 INCHES DEPTH.
6. SEED AT RATE SPECIFIED OR AS NEEDED TO ACHIEVE AND MAINTAIN A THICK HEALTHY GROUND COVERAGE.
7. MULCH IMMEDIATELY AFTER SEEDING AND ANCHOR MULCH. BEGIN THOROUGH WATERING OF GRASSED AREAS IMMEDIATELY UPON INSTALLATION. DO NOT ALLOW GRASSED AREAS TO BECOME EXCESSIVELY DRY.
8. INSPECT ALL SEEDED AREAS AND MAKE NECESSARY REPAIRS OR RESEEDINGS AS NEEDED.
9. IF CONFLICTS OCCUR BETWEEN WRITTEN SPECIFICATIONS AND THE DRAWINGS, THE WRITTEN SPECIFICATIONS SHALL PREVAIL.

SEEDBED PREPARATION

APPLY LIME AND FERTILIZER ACCORDING TO SOIL TESTS, OR APPLY A MINIMUM 3,000 LB/ACRE GROUND AGRICULTURAL LIMESTONE AND A MINIMUM 500 LB/ACRE 10-10-10 FERTILIZER, AS NEEDED TO ESTABLISH 95% COVERAGE (AS DETERMINED ON A PER SQUARE YARD BASIS) PRIOR TO SUBSTANTIAL COMPLETION. CONTRACTOR TO SUBMIT A COPY OF ALL SOIL REPORTS TO OWNER UPON RECEIPT.

LIME & FERTILIZATION SCHEDULE

1. DURING ALL PHASES OF CONSTRUCTION, GROUNDCOVER ON EXPOSED SLOPES SHALL BE PROVIDED WITHIN 14 CALENDAR DA YS FOLLOWING COMPLETION OF ANY PHASE OF GRADING.
2. FINAL PERMANENT GROUNDCOVER FOR ALL DISTURBED AREAS SHALL BE PROVIDED ON ALL DISTURBED AREAS WITHIN 14 CALENDAR DAYS FOLLOWING COMPLETION OF CONSTRUCTION OR DEVELOPMENT.
3. USE EXCELSIOR MATTING OR OTHER APPROVED CHANNEL LINING MATERIAL TO COVER THE BOTTOM OF CHANNELS.
4. APPLY 4000 LB/ACRE(2 TONS LB/AC) GRAIN STRAW OVER SEEDED AREAS AND ANCHOR STRAW CRIMPING WITH HAND OR MECHANICAL CRIMPER 8" MAX. SPACING, ASPHALT TACKING OR OTHER APPROVED METHOD. ASPHALT TACKING SHALL BE 400 GAL/ACRE (9 GAL/1000 SF).
5. MULCH AND ANCHORING MATERIALS MUST NOT BE ALLOWED TO WASH DOWN SLOPES AND CLOG DRAINAGE DEVICES.

SURFACE STABILIZATION REQUIREMENTS

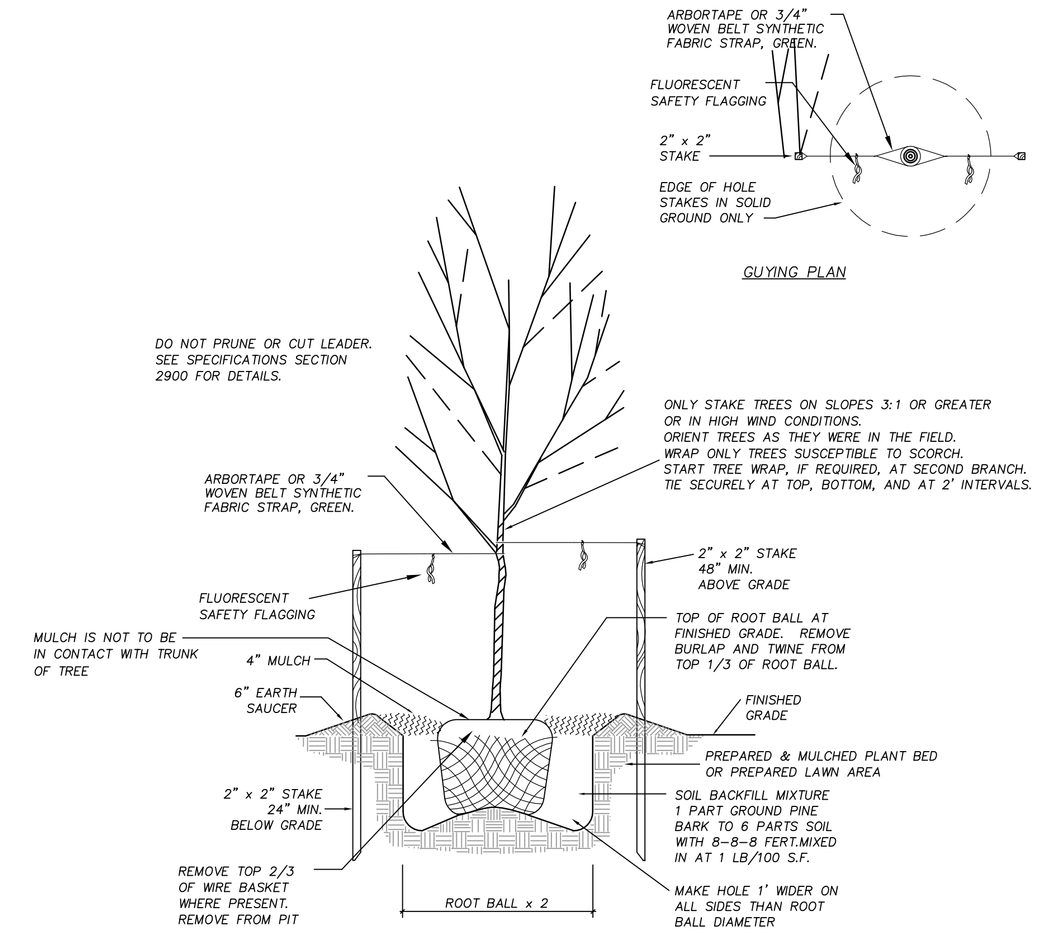

TREE PLANTING DETAIL

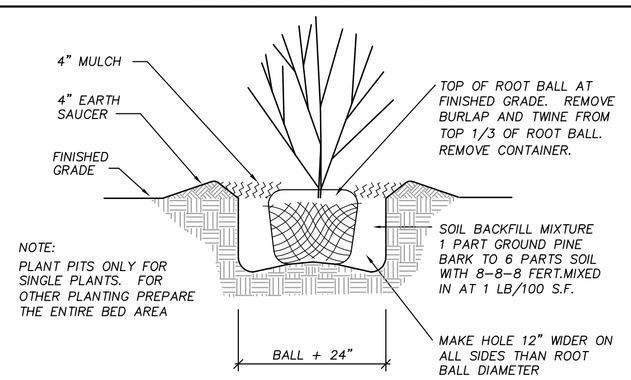

TYPICAL SHRUB PLANTING DETAIL

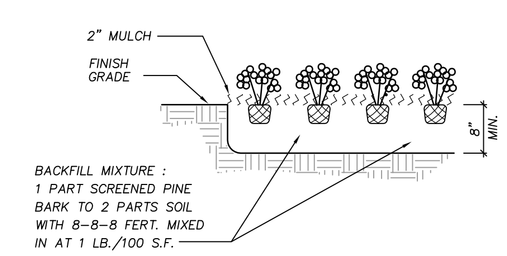

GROUND COVER PLANTING DETAIL

CITY OF WILMINGTON NORTH CAROLINA Public Services • Engineering Division APPROVED STORMWATER MANAGEMENT PLAN Date:_____ Permit #_____ Signed: _____	APPROVED CONSTRUCTION PLAN NAME DATE PLANNING _____ TRAFFIC _____ FIRE _____

CONSTRUCTION DOCUMENTS: 4-1-2016

BOWMAN MURRAY HEMINGWAY
ARCHITECTS
514 Market Street
Wilmington, NC 28401
Tel - (910) 762-2621
Fax - (910) 762-8506

Project ID # 900-9005

CLH DESIGN, P.A
400 Regency Forest Dr.
Suite 320
Cary, NC 27518
Phone: 919.319.6716
Fax: 919.319.7516
LA-C-100-PE-C-1995

NORTH CAROLINA LANDSCAPE ARCHITECT LICENSE 1861 JAMES GLENN MEDLIN 3-14-16

Renovations and Additions to:
John T. Hoggard High School
4305 Shipyard Blvd.
Wilmington, North Carolina 28403

JOB NUMBER	15-120
DRAWN BY	JGM
CHECKED BY	JGM
DATE	APRIL 1, 2016
REVISIONS	

SITE/CIVIL DETAILS

SHEET NUMBER

C7.6

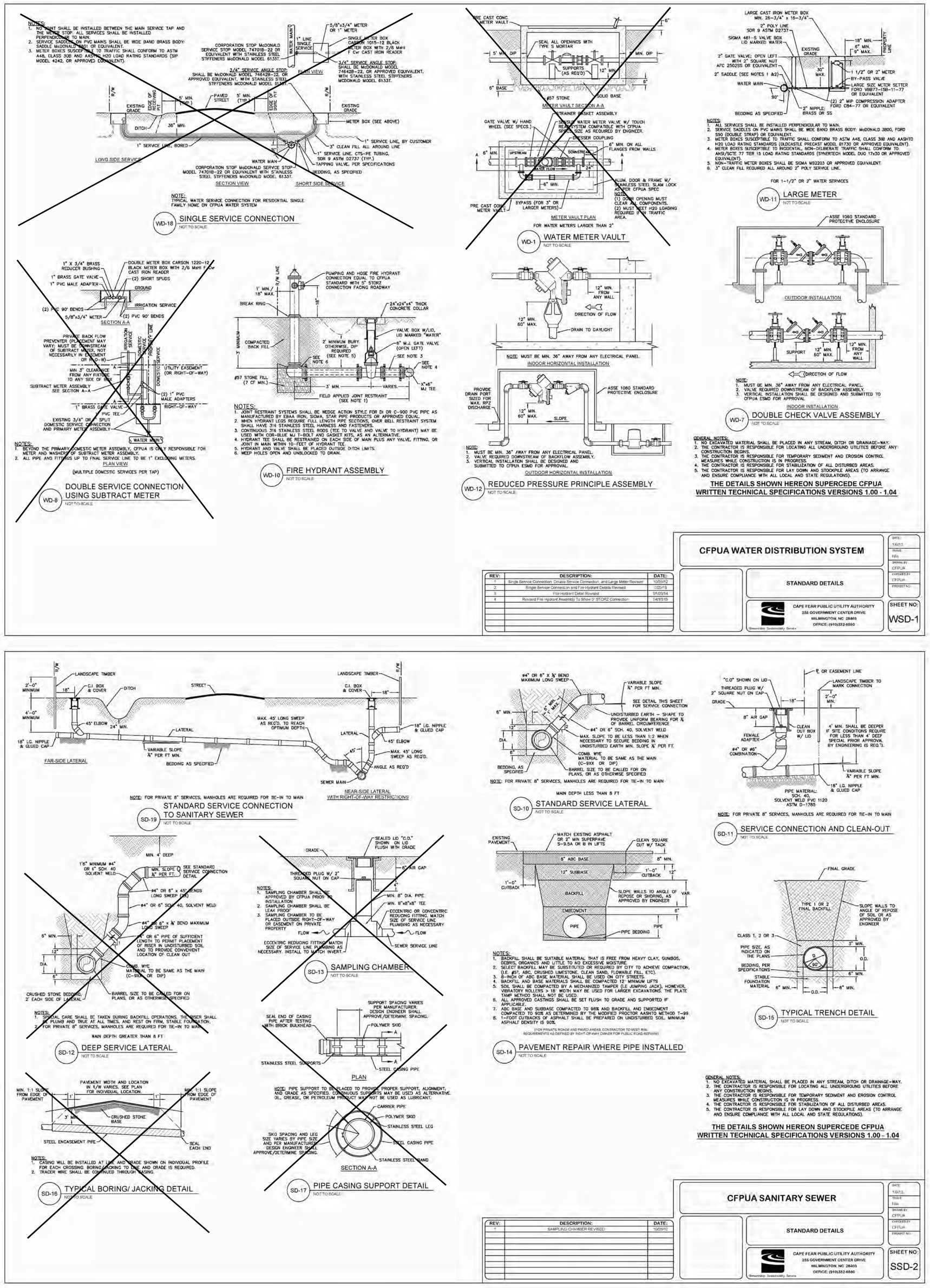

CFPUA STANDARD DETAILS

N.T.S.

CITY OF WILMINGTON NORTH CAROLINA
Public Services • Engineering Division
APPROVED STORMWATER MANAGEMENT PLAN
Date:_____ Permit #_____
Signed: _____

APPROVED CONSTRUCTION PLAN

	NAME	DATE
PLANNING		
TRAFFIC		
FIRE		

CONSTRUCTION DOCUMENTS: 4-1-2016

bmh
BOWMAN MURRAY HEMINGWAY
ARCHITECTS
514 Market Street
Wilmington, NC 28401
Tel - (910) 762-2621
Fax - (910) 762-8506

Project ID # 900-9005

CLH DESIGN, PA
400 Regency Forest Dr.
Suite 120
Cary, NC 27518
Phone: 919.319.6716
Fax: 919.319.7516
LA: C-106 PE: C-1595

NORTH CAROLINA PROFESSIONAL SEAL 23953 ENGINEER KENNETH A. LORING
3-14-16

Renovations and Additions to:
John T. Hoggard High School
4305 Shipyard Blvd.
Wilmington, North Carolina 28403

JOB NUMBER
15-120
DRAWN BY
JGM
CHECKED BY
JGM
DATE
APRIL 1, 2016
REVISIONS

SITE/CIVIL DETAILS

SHEET NUMBER
C7.7

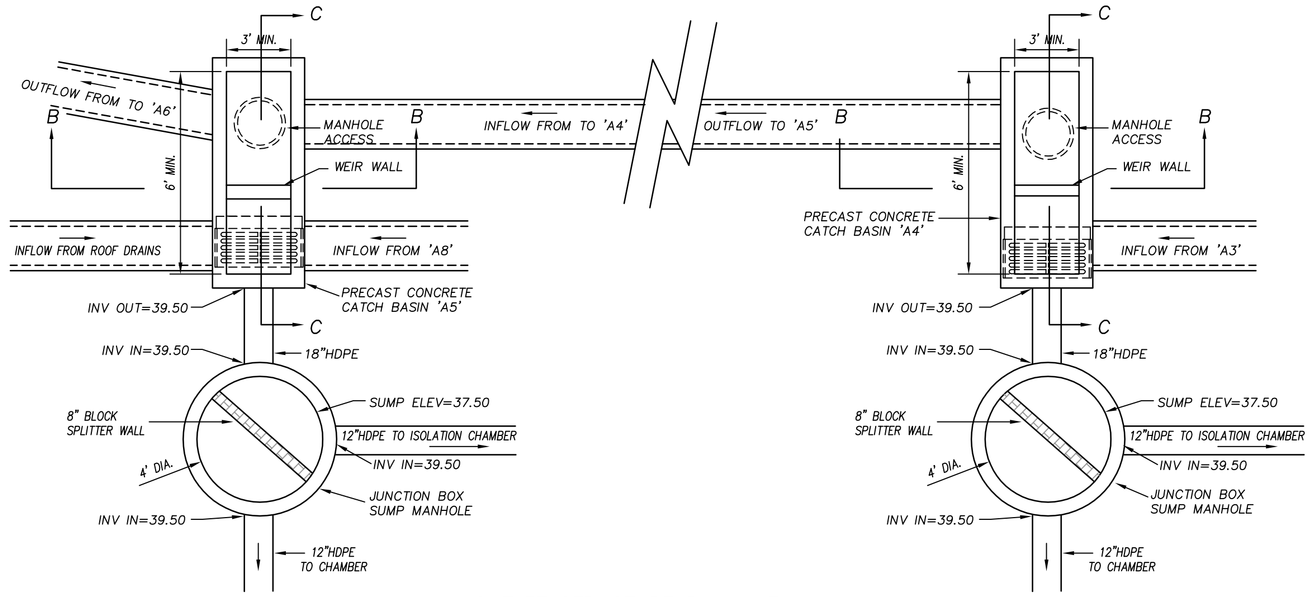

OUTLET STRUCTURE PLAN VIEW
SCALE: NOT TO SCALE

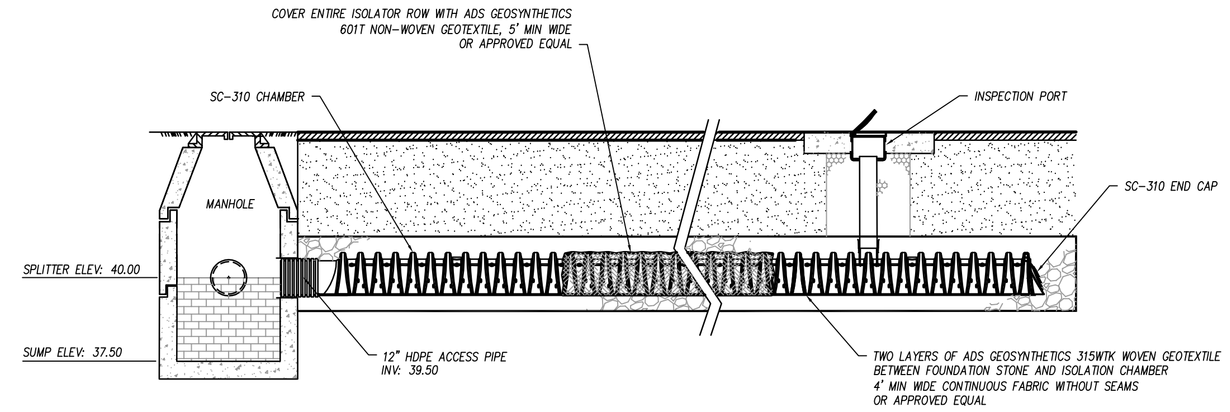

SC-310 ISOLATOR ROW DETAIL
SCALE: NOT TO SCALE

INSPECTION & MAINTENANCE

STEP 1) INSPECT ISOLATOR ROW FOR SEDIMENT
- A. INSPECTION PORTS (IF PRESENT)
  - A.1. REMOVE/OPEN LID ON NYLOPLAST INLINE DRAIN
  - A.2. REMOVE AND CLEAN FLEXSTORM FILTER IF INSTALLED
  - A.3. USING A FLASHLIGHT AND STADIA ROD, MEASURE DEPTH OF SEDIMENT AND RECORD ON MAINTENANCE LOG
  - A.4. LOWER A CAMERA INTO ISOLATOR ROW FOR VISUAL INSPECTION OF SEDIMENT LEVELS (OPTIONAL)
  - A.5. IF SEDIMENT IS AT, OR ABOVE, 3" (80 mm) PROCEED TO STEP 2. IF NOT, PROCEED TO STEP 3.
- B. ALL ISOLATOR ROWS
  - B.1. REMOVE COVER FROM STRUCTURE AT UPSTREAM END OF ISOLATOR ROW
  - B.2. USING A FLASHLIGHT, INSPECT DOWN THE ISOLATOR ROW THROUGH OUTLET PIPE
    - i) MIRRORS ON POLES OR CAMERAS MAY BE USED TO AVOID A CONFINED SPACE ENTRY
    - ii) FOLLOW OSHA REGULATIONS FOR CONFINED SPACE ENTRY IF ENTERING MANHOLE
  - B.3. IF SEDIMENT IS AT, OR ABOVE, 3" (80 mm) PROCEED TO STEP 2. IF NOT, PROCEED TO STEP 3.

STEP 2) CLEAN OUT ISOLATOR ROW USING THE JETVAC PROCESS
- A. A FIXED CULVERT CLEANING NOZZLE WITH REAR FACING SPREAD OF 45" (1.1 m) OR MORE IS PREFERRED
- B. APPLY MULTIPLE PASSES OF JETVAC UNTIL BACKFLUSH WATER IS CLEAN
- C. VACUUM STRUCTURE SUMP AS REQUIRED

STEP 3) REPLACE ALL COVERS, GRATES, FILTERS, AND LIDS; RECORD OBSERVATIONS AND ACTIONS.

STEP 4) INSPECT AND CLEAN BASINS AND MANHOLES UPSTREAM OF THE STORMTECH SYSTEM.

NOTES

1. INSPECT EVERY 6 MONTHS DURING THE FIRST YEAR OF OPERATION. ADJUST THE INSPECTION INTERVAL BASED ON PREVIOUS OBSERVATIONS OF SEDIMENT ACCUMULATION AND HIGH WATER ELEVATIONS.
2. CONDUCT JETTING AND VACTORING ANNUALLY OR WHEN INSPECTION SHOWS THAT MAINTENANCE IS NECESSARY.

CITY OF WILMINGTON NORTH CAROLINA
Public Services • Engineering Division
APPROVED STORMWATER MANAGEMENT PLAN
Date:_____ Permit #_____
Signed: _____

APPROVED CONSTRUCTION PLAN

	NAME	DATE
PLANNING		
TRAFFIC		
FIRE		

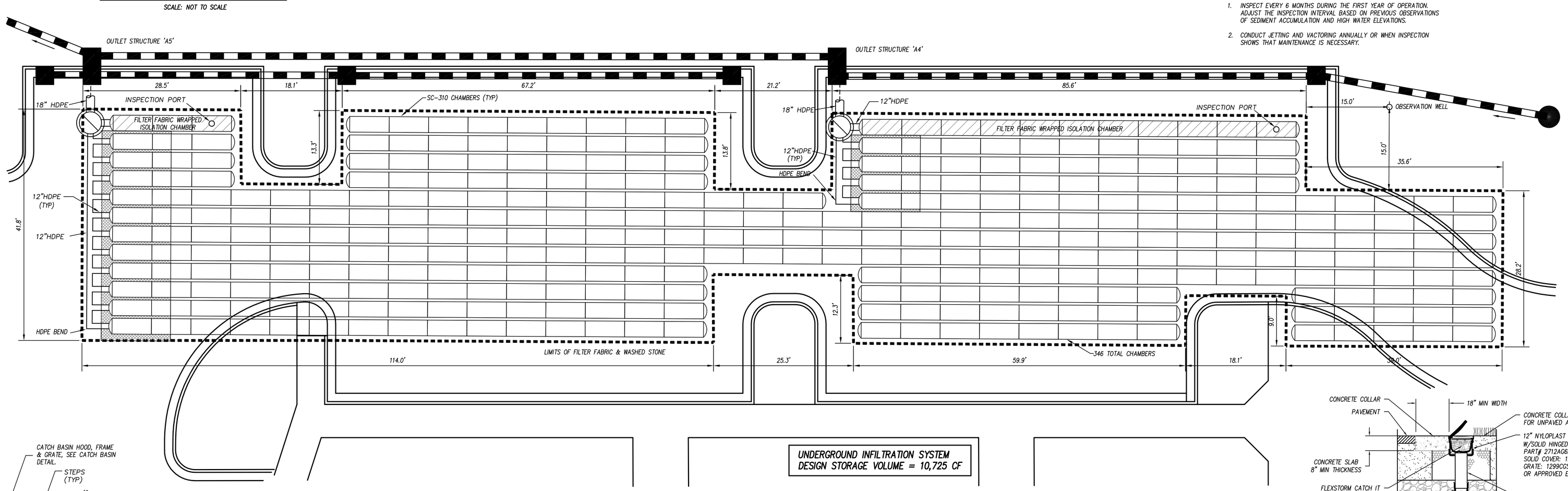

PLAN VIEW
SCALE: 1"=10'

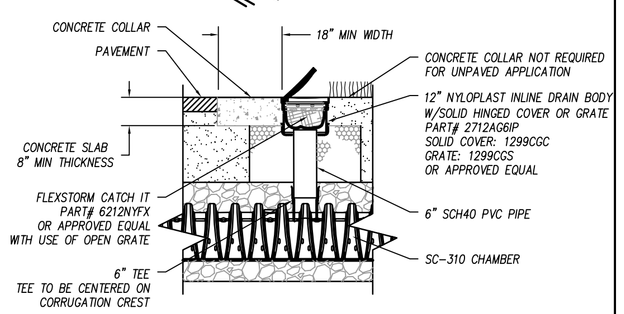

SC-310 6" INSPECTION PORT DETAIL
SCALE: NOT TO SCALE

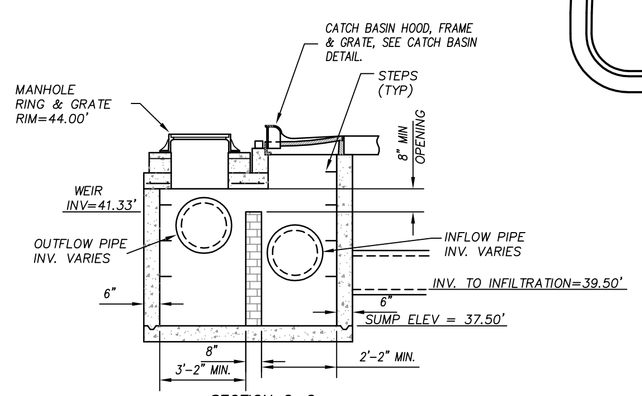

SECTION C-C

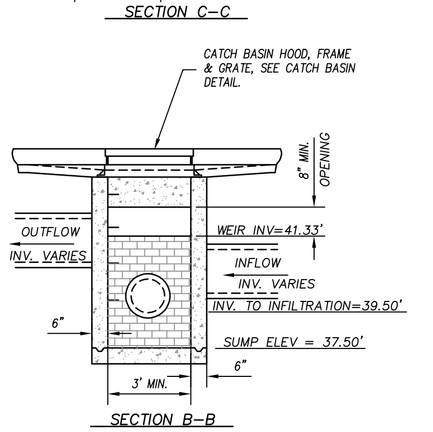

SECTION B-B

STRUCTURE 'A4' & 'A5'
SCALE: NOT TO SCALE

NOTES:

1. A COMPLETE STORMWATER STORAGE SYSTEM SHALL BE PROVIDED FROM A SINGLE MANUFACTURER AND SHALL INCLUDE ALL NECESSARY COMPONENTS INCLUDING STORAGE CHAMBER UNITS, CHAMBER CONNECTORS, FITTINGS AND ACCESSORIES.
2. STORMWATER STORAGE CHAMBERS SHALL BE STORMTECH SC-310 OR APPROVED EQUAL.
3. ALL COMPONENTS SHALL BE INSTALLED IN STRICT ACCORDANCE WITH THE MANUFACTURER'S WRITTEN INSTRUCTIONS.
4. CHAMBERS SHALL BE CONSTRUCTED OF HIGH MOLECULAR WEIGHT HDPE WITH OPEN BOTTOMS, INTEGRALLY FORMED ENDWALLS AND PERFORATED SIDEWALLS.
5. CHAMBER SYSTEMS SHALL BE DESIGNED TO WITHSTAND AASHTO H-20 LOAD RATINGS.
6. CONTRACTOR SHALL SUBMIT DIMENSIONED SHOP DRAWINGS OF THE COMPLETE SYSTEM FOR APPROVAL PRIOR TO CONSTRUCTION.
7. FILTER FABRIC SHALL BE A 4-OZ NON-WOVEN GEOTEXTILE.
8. STONE BACKFILL SHALL BE NO. 57 WASHED STONE.
9. SYSTEM SHALL NOT BE INSTALLED UNTIL THE CONTRIBUTING DRAINAGE AREA IS STABILIZED AND APPROVED BY THE ENGINEER. EXTREME CARE SHALL BE USED DURING INSTALLATION TO AVOID CONTAMINATION OF WASHED-STONE BACKFILL. SYSTEM SHALL BE BACKFILLED AND FINAL GROUND SURFACES SHALL BE STABILIZED IMMEDIATELY.

	NAME	DATE
PLANNING		
TRAFFIC		
FIRE		

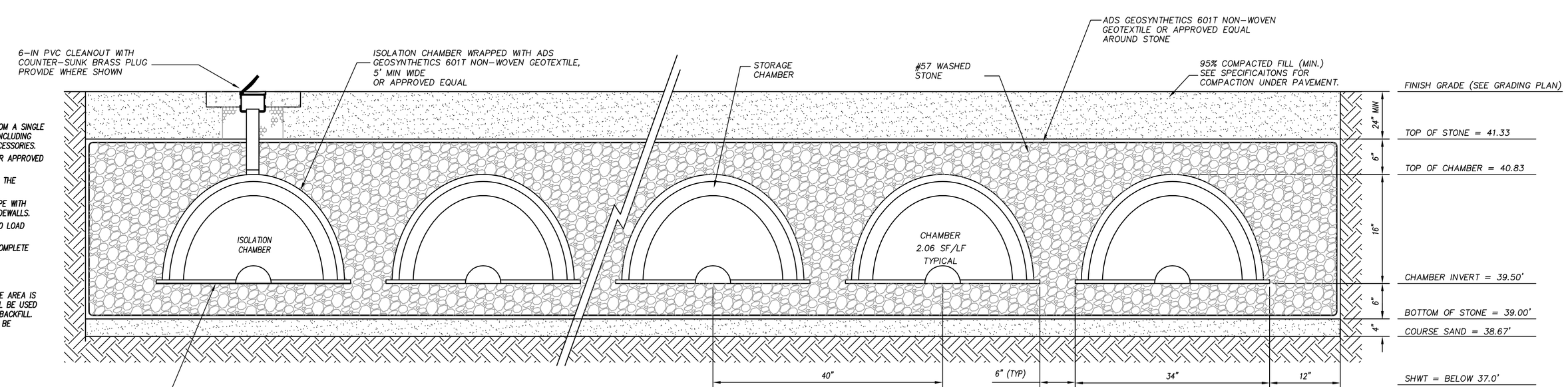

SECTION VIEW A-A
SCALE: NOT TO SCALE

UNDERGROUND INFILTRATION BASIN

N.T.S.

BOWMAN MURRAY HEMINGWAY
ARCHITECTS
514 Market Street
Wilmington, NC 28401
Tel - (910) 762-2621
Fax - (910) 762-8506

Project ID # 900-9005

CLH DESIGN, P.A.
400 Regency Forest Dr.
Suite 320
Cary, NC 27518
Phone: 919.319.6716
Fax: 919.319.7516
EA-C-100-PE C-1995

NORTH CAROLINA PROFESSIONAL SEAL 23953 ENGINEER KENNETH A. LORING
3-14-16

Renovations and Additions to: John T. Hoggard High School

4305 Shipyard Blvd.
Wilmington, North Carolina 28403

CONSTRUCTION DOCUMENTS: 4-1-2016

JOB NUMBER	15-120
DRAWN BY	JGM
CHECKED BY	JGM
DATE	APRIL 1, 2016
REVISIONS	

SITE/CIVIL DETAILS

SHEET NUMBER

C7.8

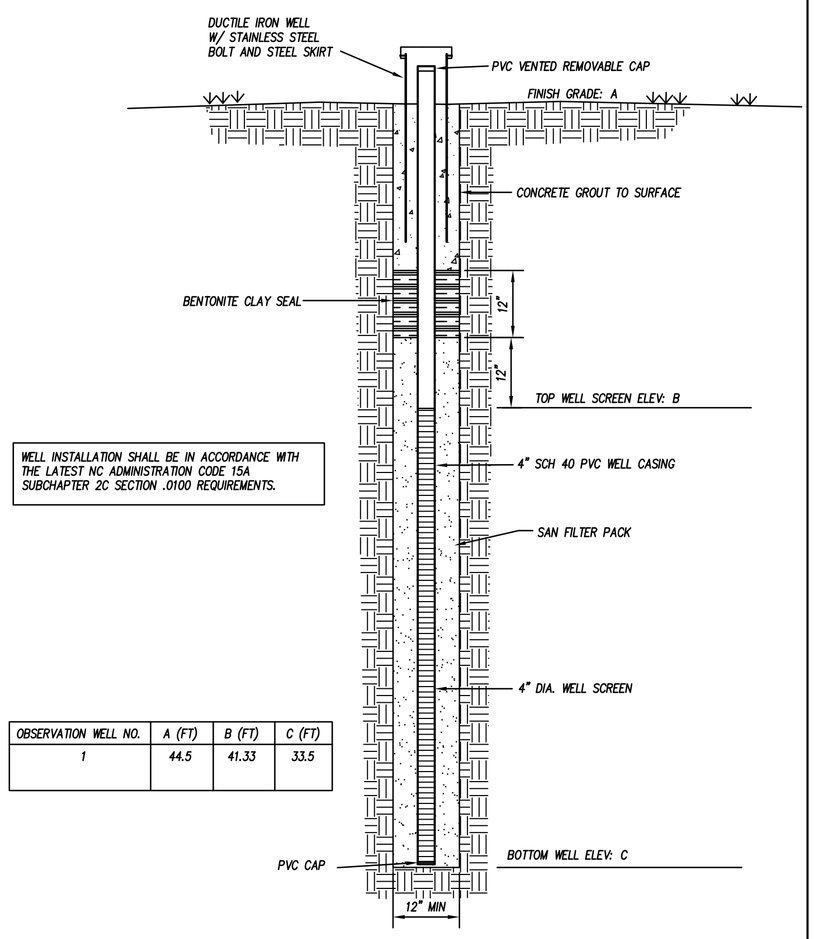

WELL INSTALLATION SHALL BE IN ACCORDANCE WITH THE LATEST NC ADMINISTRATION CODE 15A SUBCHAPTER 2C SECTION .0100 REQUIREMENTS.

OBSERVATION WELL NO.	A (FT)	B (FT)	C (FT)
1	44.5	41.33	33.5

OBSERVATION WELL

N.T.S.

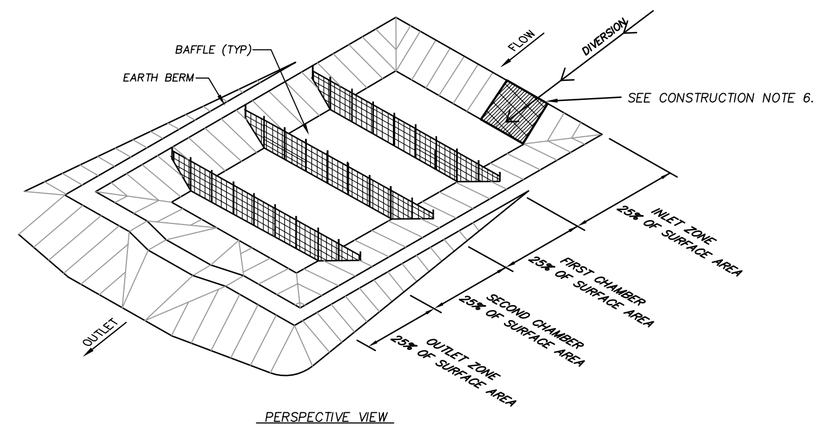

PERSPECTIVE VIEW

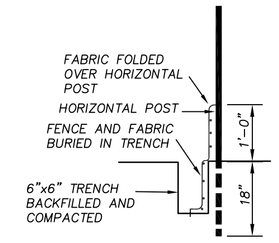

SECTION AT OPENING

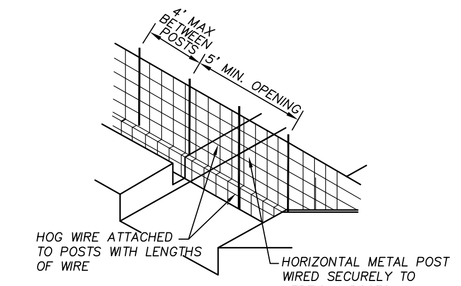

BAFFLE INSTALLATION – STEP 1

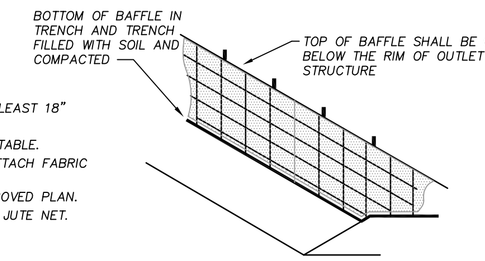

BAFFLE INSTALLATION – STEP 2

BAFFLE NOTES:

1. DRIVE STEEL FENCE POST AT LEAST 18" INTO SOLID GROUND.
2. WOOD POSTS ARE NOT ACCEPTABLE.
3. USE STAPLES 1' APART TO ATTACH FABRIC TO "HOG WIRE".
4. BAFFLE SPACED AS PER APPROVED PLAN.
5. BAFFLE FABRIC SHALL WOVEN JUTE NET.

CONSTRUCTION NOTES:

1. PLACE TEMPORARY SEDIMENT CONTROL MEASURES BELOW BASIN AS INDICATED. CLEAR, GRUB AND STRIP THE AREA UNDER THE EMBANKMENT OF ALL VEGETATION AND ROOT MAT. REMOVE ALL SURFACE SOILS CONTAINING HIGH AMOUTS OF ORGANIC MATTER.
2. PLACE OUTLET BARREL ON A FIRM, SMOOTH FOUNDATION OF IMERVIOUS SOIL. DO NOT USE PERVIOUS MATERIAL SUCH AS SAND, GRAVEL OR CRUSHED STONE AS BACKFILL AROUND PIPE. PLACE FILL MAERIAL AROUND PIPE IN 4-IN LAYERS AND COMPACT IT UNDER AND AROUND THE PIPE TO AT LEAST 90% OF THE STANDARD PROCTOR DENSITY. CARE SHALL BE TAKEN TO NOT RAISE THE PIPE FROM FIRM CONTACT WITH ITS FOUNDATION.
3. ASSEMBLE THE SKIMMER IN ACCORDANCE WITH THE MANUFACTURER'S INSTRUCTIONS. ATTACH SKIMMER TO BARREL PIPE WITH FLEXIBLE JOINT AND POSITION THE SKIMMER OVER THE EXCAVATED PIT. ATTACH A ROPE TO THE SKIMMER AND ANCHOR IT TO THE SIDE OF THE BASIN.
4. EMBANKMENT SHALL BE CONSTRUCTED OF CLEAN STRUCTURAL SOIL, FREE OF ROOTS, VEGETATION, ROCKS & OTHER OBJECTIONABLE MATERIAL. SCARIFY SURFACES BEFORE PLACING FILL. PLACE FILL IN 6–8 INCH LOOSE LIFTS. COMPACT TO AT LEAST 90% OF THE STANDARD PROCTOR DENSITY.
5. LINE THE ENTIRE EMERGENCY SPILLWAY WITH LAMINATED PLASTIC OR IMPERMEABLE GEOTEXTILE FABRIC. FABRIC SHALL BE WIDE ENOUGH TO COVER THE BOTTOM AND SIDES OF THE SPILLWAY AND EXTEND ONTO THE TOP OF THE DAM FOR ANCHORING IN A TRENCH. THE EDGES SHALL BE SECURED WITH 8-IN STAPLES OR PINS. THE FABRIC SHALL BE LONG ENOUGH TO EXTEND DOWN THE SLOPE AND EXIT ONTO STABLE GROUND. THE WIDTH OF THE FABRIC SHALL BE ONE POECE, NOT JOINED OR SPLICED. IF THE LENGTH OF THE FABRIC IS INSUFFICIENT FOR THE ENTIRE LENGTH OF THE SPILLWAY, MULTIPLE SECTIONS, SPANNING THE COMPLETE WIDTH, MAY BE USED. THE UPPER SECTIONS SHALL OVERLAP THE LOWER SECTIONS SO WATER CANNOT FLOW UNDER THE FABRIC. SECURE THE UPPER EDGE AND SIDES OF THE FABRIC IN A TRENCH WITH STAPLES OR PINS.
6. LINE SLOPES WHERE DIVERSION DITCH DISCHARGES INTO BASIN WITH LAMINATED PLASTIC OR IMPERMEABLE GEOTEXTILE FABRIC.

BASIN NUMBER	A (FT)	B (FT)	C (FT)	D (FT)	E (IN)	F (IN)	G (FT)
TSSB-1	37.5	39.0	40.5	42.5	1.5	1.0	10.0

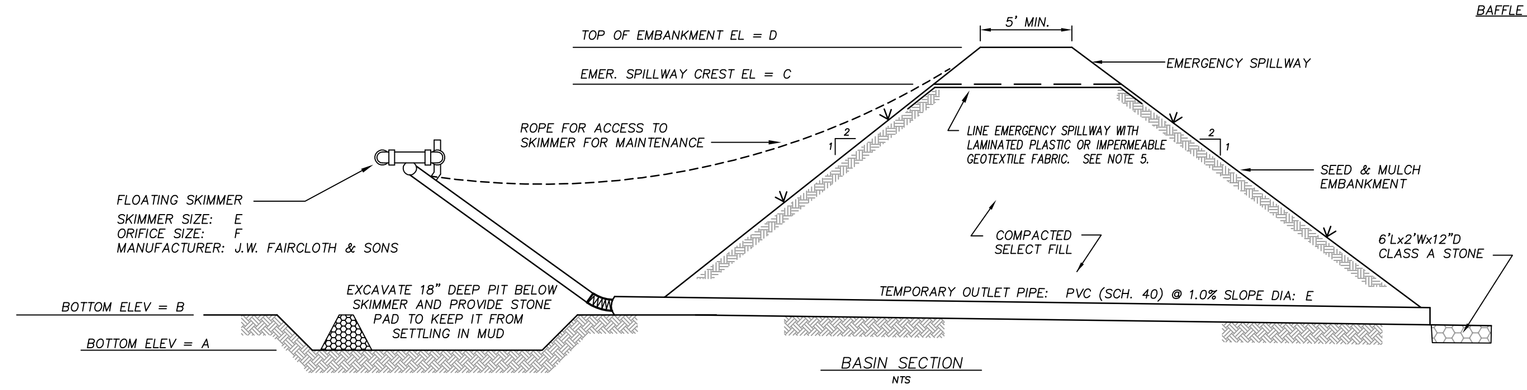

BASIN SECTION
NTS

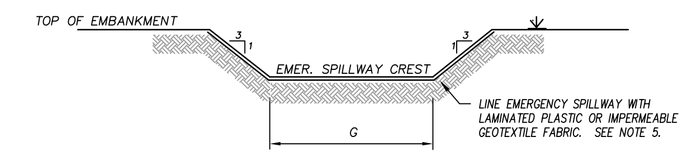

EMERGENCY SPILLWAY SECTION
NTS

MAINTENANCE NOTES:

1. INSPECT DEVICE AFTER EACH RAINFALL. REMOVE SEDIMENT WHEN SEDIMENT REACHES A DEPTH OF NO MORE THAN ONE-HALF THE HEIGHT OF THE RISER. REPAIR BAFFELS IF THEY ARE DAMAGED.
2. PULL SKIMMER TO SIDE OF BASIN WITH ROPE AND INSPECT REGULARLY. KEEP SKIMMER HEAD, ORIFICE AND PIPE FREE OF DEBRIS. REMOVE SEDIMENT FROM BENEATH SKIMMER AND ENUSRE VEGETATION DOES NOT INTERFERE WITH SKIMMER OPERATION.
3. CHECK FABRIC LINED SPILLWAY FOR DAMAGE AND MAKE ANY REPAIRS WITH FABRIC THAT SPANS THE FULL WIDTH OF THE SPILLWAY.
4. ALL DEWATERING SHALL BE PUMPED THROUGH SILT FILTER BAG. SILT FILTER BAG SHALL BE PLACED ON FLAT SURFACE WITHIN LIMITS OF DISTURBANCE.

TEMPORARY SKIMMER SEDIMENT BASIN

N.T.S.

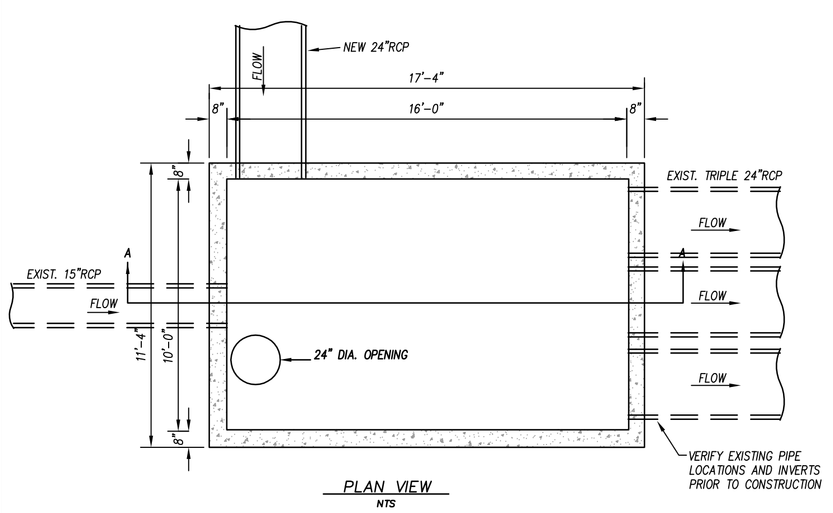

PLAN VIEW
NTS

NOTES:

1. CONCRETE: 4000 PSI AT 28 DAY.
2. PRECAST STRUCTURE SUPPORTS AN H20 LOADING AS INDICATED BY AASHTO.
3. CONTRACTOR SHALL VERIFY SIZE AND DIMENSIONS OF PIPE LOCATIONS.

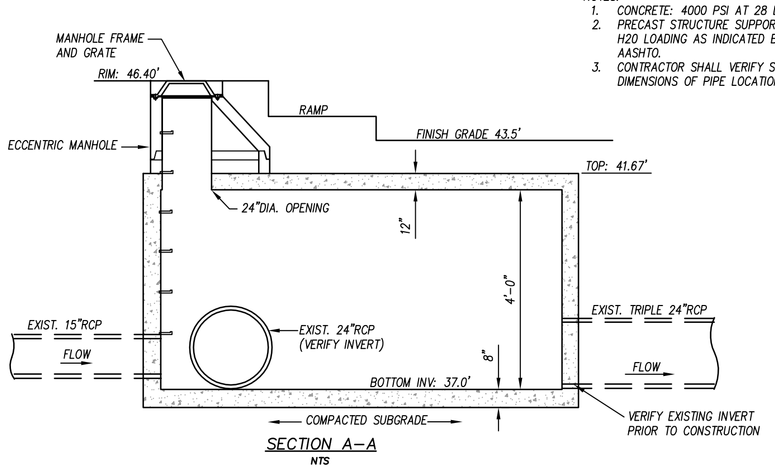

SECTION A–A
NTS

PRECAST STORMWATER JUNCTION BOX

N.T.S.

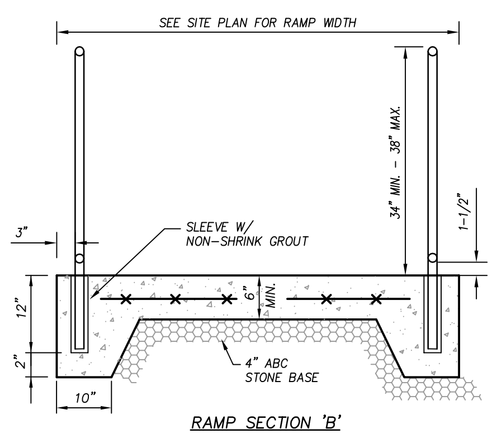

RAMP SECTION 'B'

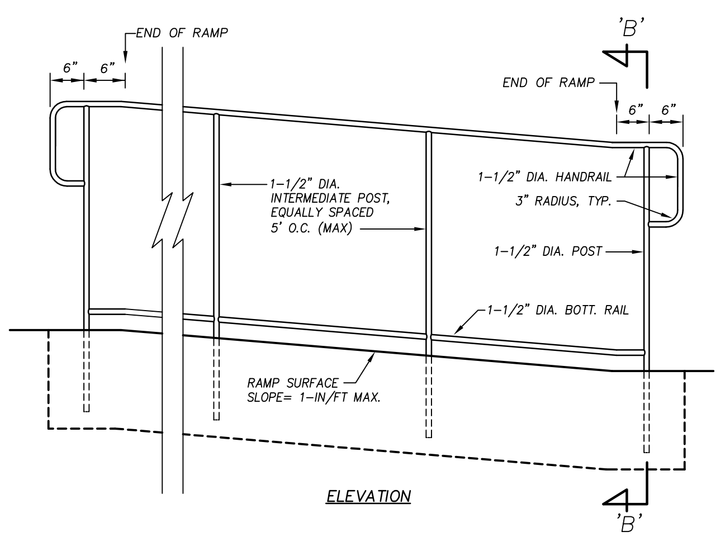

ELEVATION

NOTES

1. CONCRETE SHALL BE 3,000-PSI @ 28 DAYS.
2. PROVIDE NO-SLIP BROOM FINISH PERPENDICULAR TO DIRECTION OF TRAVEL.
3. HANDRAILS SHALL BE CONSTRUCTED IN ACCORDANCE WITH NC BUILDING CODE VOLUME 1-C, CHAPTER 5.4.2.
4. HANDRAILS SHALL BE SCH-40, HOT-DIP GALVANIZED STEEL (ASTM A53).
5. 12 IN. SLEEVES SHALL BE HOT-DIP GALVANIZED STEEL PIPE (ASTM A53) NOT LESS THAN 1/2 IN. MORE THAN OUTSIDE DIMENSION OF POST AND FLAT STEEL PLATE FORMING BOTTOM CLOSURE.
6. FILL VOIDS BETWEEN POST AND SLEEVE WITH NON-SHRINK ANCHORING CEMENT MIXED AND PLACED TO COMPLY WITH MANUFACTURER'S RECOMMENDATIONS.

ACCESSIBLE RAMP WITH HANDRAILS

N.T.S.

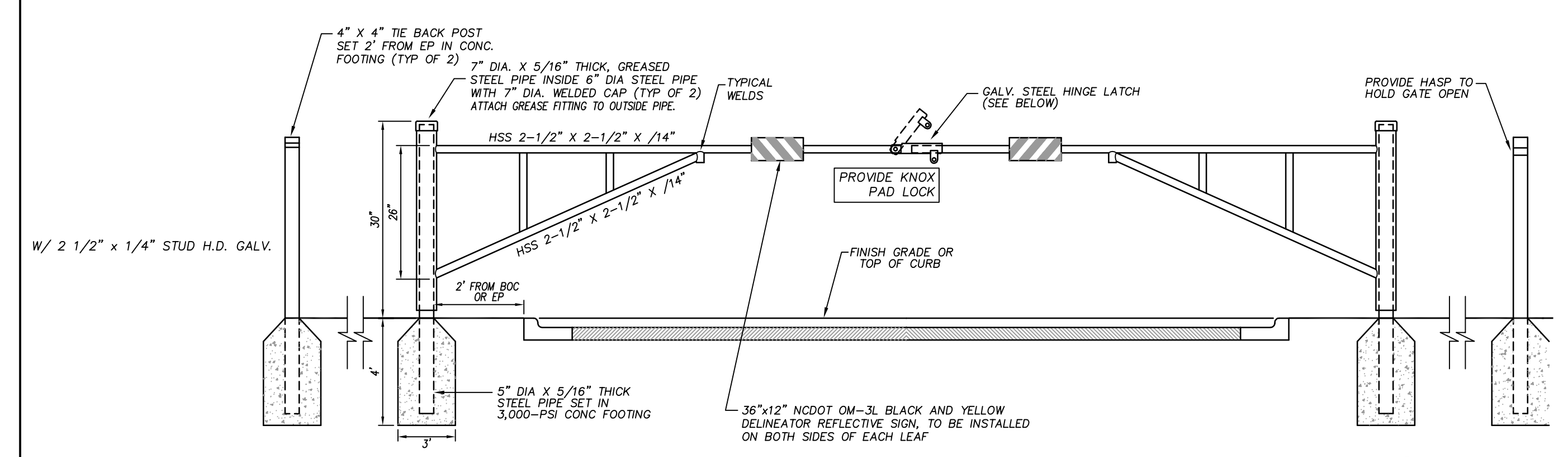

NOTES:

1. ALL STEEL SHALL BE HOT-DIPPED GALVANIZED AND EPOXY PAINTED.
2. SUBMIT SHOP DRAWING FOR REVIEW AND APPROVAL PRIOR TO FABRICATION AND ASSEMBLY.

PAINTING SPECIFICATIONS:

1. MANUFACTURER: TNEMEC COMPANY, INC.; CARY, NC (919-859-3737)
2. SYSTEM TYPE: EPOXY-POLYURETHANE
3. SURFACE PREPARATION: SSPV-SPI AND BRUSH OFF BLAST CLEAN
4. PRIMER: SERIES 27 (FIELD-COATED) TYPOXY OR 69 HI-BUILD EPOXOLINE
5. FINISH PAINT: SERIES 73 ENDURA-SHIELD, SEMI-GLOSS, SUBMIT COLOR OPTIONS FOR SELECTION BY ARCHITECT.
6. CONTRACTOR SHALL INSTALL KNOX BOX AT THE DIRECTION OF FIRE MARSHAL. KNOX BOX SHALL BE PER TOWN OF APEX STANDARDS.

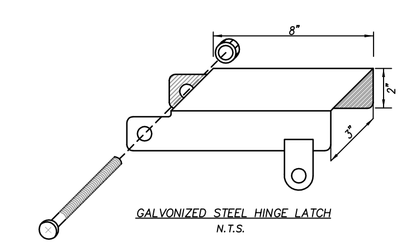

GALVONIZED STEEL HINGE LATCH
N.T.S.

PIPE GATE

N.T.S.

APPROVED CONSTRUCTION PLAN

	NAME	DATE
PLANNING		
TRAFFIC		
FIRE		

CITY OF WILMINGTON NORTH CAROLINA
Public Services • Engineering Division
APPROVED STORMWATER MANAGEMENT PLAN
Date:_____ Permit #_____
Signed: _____

CONSTRUCTION DOCUMENTS: 4-1-2016

BOWMAN MURRAY HEMINGWAY
ARCHITECTS
514 Market Street
Wilmington, NC 28401
Tel - (910) 762-2621
Fax - (910) 762-8506

Project ID # 900-9005

CLH DESIGN, P.A
400 Regency Forest Dr.
Suite 320
Cary, NC 27518
Phone: 919.319.6716
Fax: 919.319.7516
LA-C-198-PE C-1995

NORTH CAROLINA PROFESSIONAL SEAL 23953 ENGINEER KENNETH A. LORING
3-14-16

Renovations and Additions to:
John T. Hoggard High School
4305 Shipyard Blvd.
Wilmington, North Carolina 28403

JOB NUMBER	15-120
DRAWN BY	JGM
CHECKED BY	JGM
DATE	APRIL 1, 2016
REVISIONS	

SITE/CIVIL DETAILS

SHEET NUMBER

C7.9