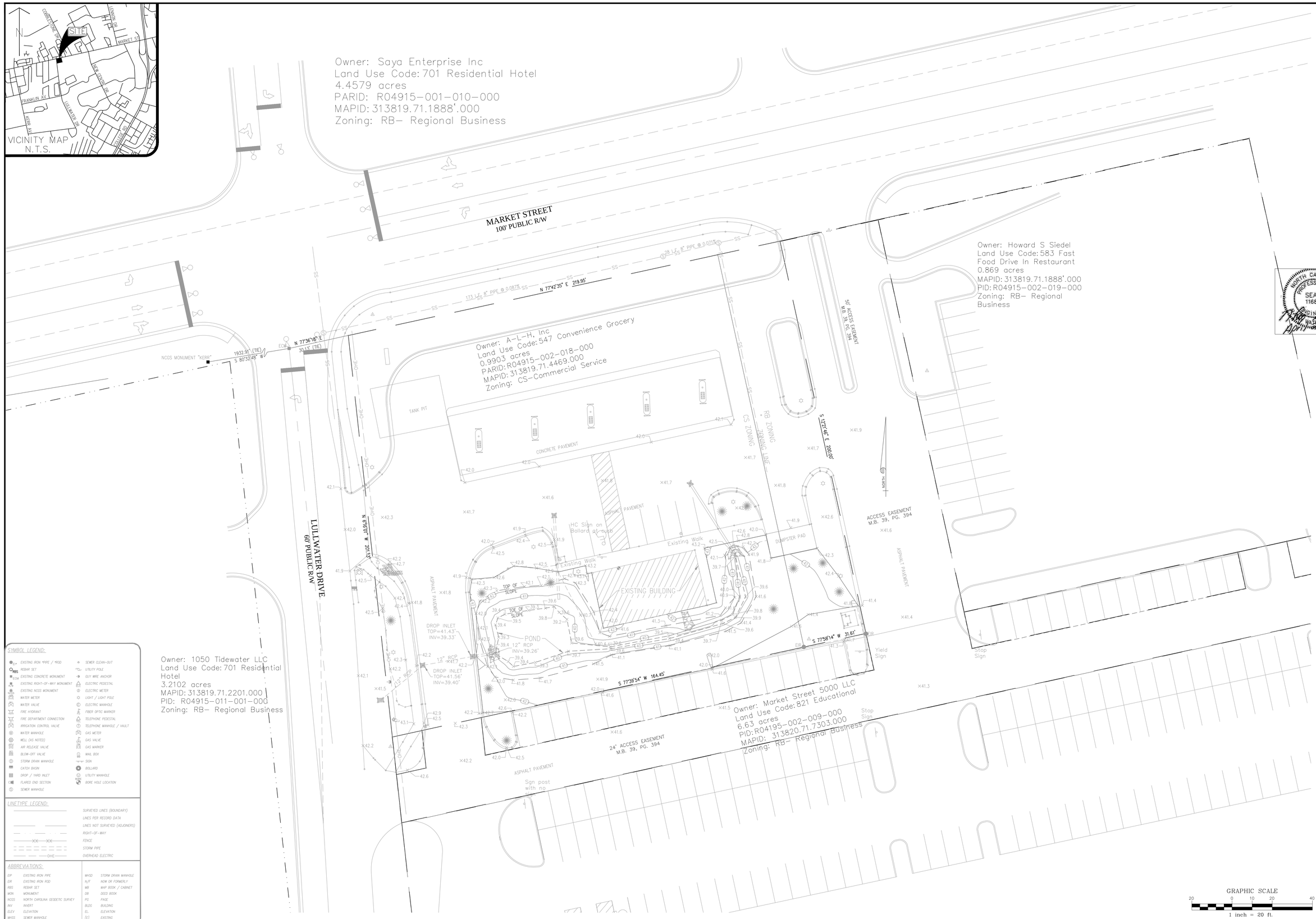

SYMBOL LEGEND:

EIP	EXISTING IRON PIPE / ROD
RBS	REBAR SET
ECM	EXISTING CONCRETE MONUMENT
	EXISTING RIGHT-OF-WAY MONUMENT
	EXISTING NCGS MONUMENT
	WATER METER
	WATER VALVE
	FIRE HYDRANT
	FIRE DEPARTMENT CONNECTION
	IRRIGATION CONTROL VALVE
	WATER MANHOLE
	WELL (AS NOTED)
	AIR RELEASE VALVE
	BLOW-OFF VALVE
	STORM DRAIN MANHOLE
	CATCH BASIN
	DROP / YARD INLET
	FLARED END SECTION
	SEWER MANHOLE
	SEWER CLEAN-OUT
	UTILITY POLE
	GUY WIRE ANCHOR
	ELECTRIC PEDESTAL
	ELECTRIC METER
	LIGHT / LIGHT POLE
	ELECTRIC MANHOLE
	FIBER OPTIC MARKER
	TELEPHONE PEDESTAL
	TELEPHONE MANHOLE / VAULT
	GAS METER
	GAS VALVE
	GAS MARKER
	MAIL BOX
	SIGN
	BOLLARD
	UTILITY MANHOLE
	BORE HOLE LOCATION

LINETYPE LEGEND:

	SURVEYED LINES (BOUNDARY)
	LINES PER RECORD DATA
	LINES NOT SURVEYED (ADJOINERS)
	RIGHT-OF-WAY
XX XX	FENCE
	STORM PIPE
OHE	OVERHEAD ELECTRIC

ABBREVIATIONS:

EIP	EXISTING IRON PIPE	MHSD	STORM DRAIN MANHOLE
EIR	EXISTING IRON ROD	N/F	NOW OR FORMERLY
RBS	REBAR SET	MB	MAP BOOK / CABINET
MON	MONUMENT	DB	DEED BOOK
NCGS	NORTH CAROLINA GEODETIC SURVEY	PG	PAGE
INV	INVERT	BLDG	BUILDING
ELEV	ELEVATION	EL	ELEVATION
MHSS	SEWER MANHOLE	(E)	EXISTING

DATE 12/12/13
Rev 4/17/2014

CADD DWG. NO.

DRAWN BY
nrw

CHECKED BY
nrw

REVISIONS

WATSON LAND DESIGN SERVICES, PLLC
3650 ROGERS ROAD, #245
WAKE FOREST, NORTH CAROLINA 27587
919-453-1529/FAX 866-437-2610
NC CERTIFICATE OF LICENSURE P-0493

NORTH CAROLINA PROFESSIONAL SEAL 11682 ENGINEER

SHERMAN ARCHITECTURE
PLLC
2411 LEMON SPRINGS ROAD, SANFORD, NORTH CAROLINA
(919)-775-2355

ADDITION AND RENOVATIONS
HAN-DEE HUGO #28
5002 MARKET STREET
WILMINGTON, NORTH CAROLINA

EXISTING CONDITIONS PLAN

SHEET
C100
OF

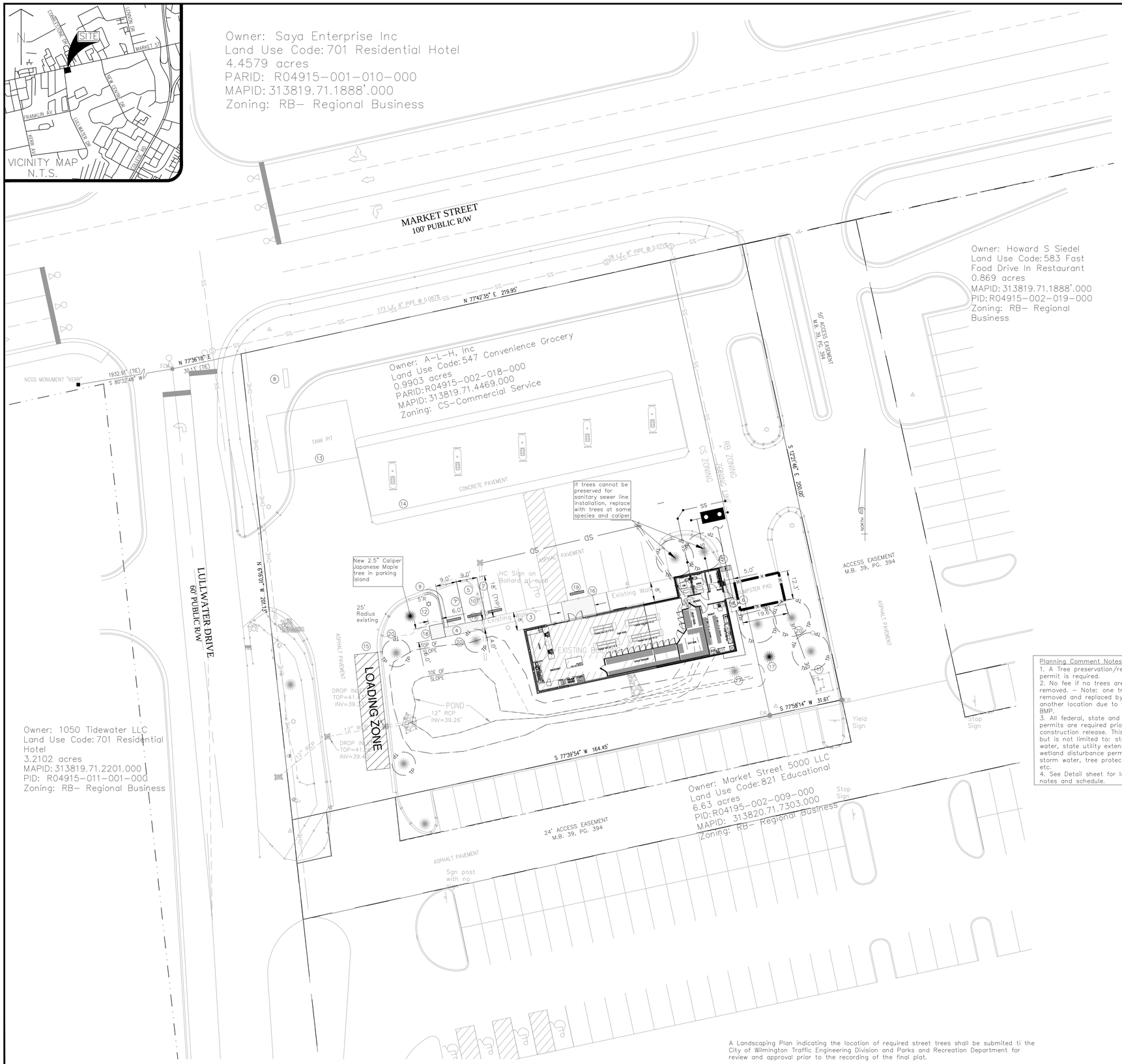

A Landscaping Plan indicating the location of required street trees shall be submited ti the City of Wilmington Traffic Engineering Division and Parks and Recreation Department for review and approval prior to the recording of the final plat.

Planning Comment Notes:
1. A Tree preservation/removal permit is required.
2. No fee if no trees are to be removed. – Note: one tree to be removed and replaced by tree in another location due to changes in BMP.
3. All federal, state and local permits are required prior to full construction release. This includes, but is not limited to: state storm water, state utility extension permits, wetland disturbance permits, city storm water, tree protecton permits, etc.
4. See Detail sheet for landscape notes and schedule.

1. Prior to any clearing, grading or construction activity, tree protection fencing shall be installed around protected trees or groves of trees, No construction workers, tools, materials, or vehicles are permitted within the tree protection fencing.

2. Any trees and/or areas designated to beprotected must be properly barricaded with fencing and protected throughout construction to insure that no clearing, grading or staging of materials will occur in those areas.

3. No equipment is allowed on site until all tree protection fencing and silt fencing is installed and approved. Protective fencing is to be maintained throughout the duration of the project, and contractors shall receive adequate instruction on tree protection methods.

4. All pavement markings in public rights-of-way and for driveways are to be thermoplastic and meet City and/or NCDOT standards.

5. Once streets are open to traffic, contact Traffic Engineering regarding the installation of traffic and street name ' signs. Proposed street names must be approved prior to installation of street name signsls.

6. Traffic control devices (including signs and pavement markings) in areas open to public trafiic are to meet MUTCD (Manual on Uniform Traffic Control Devices) standards.

7..Contact Traffic Engineering at |910-341-7888 to ensure that all traffic signal facilities and equipment are shown on the plan.

8. .Call Traffic Engineering at 910-341-7888 forty-eight (48) hours prior to any excavation in the right-of-way.

9. Traffic Engineering must approve of pavement marking prior to actual striping.

10. All parking stall markings and lane arrows within the parking areas shall be white.

11. All traffic control signs and markings off the right-of-way are to be maintained by the property owner in accordance with MUTCD standards.

12. Stop signs and street signs to remain in place during construction.

13. Tactile warning mats will be installed on all wheelchair ramps.

14. A utility cut permit is required for each open cut of a city street. Note this on the plan and contact 910-341-5888 for more details. in certain cases an entire resurfacing of the area being open cut may be required.

15. Any broken or missing sidewalk panels, driveway panels and curbing will be replaced.

16. Contact Karen Dixon at 910-341-7888 to discuss street lighting options.

17. Water and sewer service shall meet Cape Fear Public Utility Authority (CFPUA) details and specifications.

18, Project shall comply with CFPUA Cross Connection Control requirements. Water meter(s) cannot be released until all requirements are met and the State has given their final approval. Call 910.343-3910 for information.

19. If the contractor desires CFPUA water for construction, he shall apply in advance for this service and must provide a reduced pressure zone (RPZ) backflow prevention device on the developer's side of the water meter box

20. Any irrigation system supplied by CFPUA water shall comply with thg CFPUA Cross Connection Control regulations. Call 919-343-3910 for information.

21 . Any irrigation system shall be equipped with a rain and freezer sensor.

22. Any backflow prevention devices required by the CFPUA will need to be on the list of approved devices by USCFCCCHR or ASSE.

23. Contractor to field verify existing water and sewer service locations, sizes and materials prior to construction. Engineer to be notified of any conflicts

24. Contractor shall maintain all-weather access for emergency vehicles at all times during construction.

25. Underground fire line(s) must be permitted and inspected by the Wilmington Fire Department from the publicright-of-way to the building. Contact the Wilmington Fire Department Division of Fire and Life Safety at 910-3414696.

26. No obstructions are permitted in the space betu,een thirty (30) incfies and ten (10) feet above the ground within the triangular sight distance

27. Contact the North Carolina One Call Center at 1-800-632.4949 prior to doing any digging, clearing, or grading.

SITE KEY NOTES:

1. CONSTRUCT CONCRETE WALK PER DETAIL SHEET
2. CONSTRUCT CONCRETE H.C. RAMP PER DETAIL SHEET
3. H.C. SIGN ON BOLLARD IN CURB TO REMAIN
4. MATCH EXISTING SIDEWALK WIDTH
5. NEW ASPHALT PAVEMENT 1" SURFACE COURSE/2" BINDER/6" ABC
6. MODIFY DUMPSTER ENCLOSURE WALL AND GATES FOR BUILDING ADDITION AND SIDEWALK REMOVE WALL NEAREST TO BUILDING ADDITION AND CONSTRUCT NEW WALL BESIDE WALK TO MATCH ENCLOSURE
7. PAINT 4" WIDE STRIPE, WHITE
8. IDENTIFICATION SIGN TO REMAIN
9. MATCH EXISTING CURB AND GUTTER
10. REMOVE CURB AND GUTTER
11. CONCRETE TRANSFORMER PAD TO REMAIN, SEE UTILITY PLAN FOR NEW BUILDING SERVICE
12. RELOCATED POLE MOUNTED AREA LIGHT 5 FEET BEHIND CURB SEE UTILITY PLAN
13. TANK PIT TO REMAIN
14. CANOPY TO REMAIN
15. STRIPE 10' X 50' LOADING AREA
16. REMOVE HC RAMP AND LANDING AND REPLACE WITH NEW RAMP AND LANDING
17. RELOCATE/REPLACE TREE FOR REWORKED BMP AREA
18. CONCRETE PAD AND BIKE RACK FOR 2 BIKES
19. BUMPER BLOCK
20. TREE PROTECTION FENCE PER CoW STD 15-09 WITH SIGN STATING "TREE PROTECTION AREA, DO NOT ENTER" IN ENGLISH AND SPANISH

SITE DATA TABULATION

PROJECT +AME	HANDEE HUGO #28 REMODEL
PROJECT ADDRESS	5002 MARKET STREET WILMINGTON, NC 28405
PARCEL ID	R04915-002-018-000
ZONING DISTRICT	CS – COMMERCIAL SERVICES RB–REGIONAL BUSINESS DISTRICT
BUILDING SETBACKS – CS REQUIRED FRONT REAR INTERIOR SIDE CORNER PROPOSED FRONT SIDE REAR CORNER	 35 FEET 15 FEET 7 FEET 30 FEET 133 FEET (Building Addition) 8 FEET TO ZONING LINE, 58 FEET TO PROPERTY LINE 30 FEET (Existing) 110 FEET (Existing)
TOTAL ACREAGE	1.06 CALCULATED 46,607 SQUARE FEET 1.088 NEW HANDEE GIS RECORDS
BUILDING SIZE EXISTING PROPOSED	 1344 SQUARE FEET 2430 SQUARE FEET
BUILDING LOT COERAGE EXISTING PROPOSED	 1344/46067 = 0.0292 2.92% 2430/46067 = 0.0527, 5.27%
BUILDING HEIGHT NUMBER OF STORIES	 14'-2" EXISTING AND PROPOSED 1 STORY, EXISTING AND PROPOSED
IMPERVIOUS AREA EXISTING PROPOSED	 29,416 SQUARE FEET – 63.8% 30,666 –66.5%
OFF STREET PARKING BASIS EXISTING PROPOSED	 1/400 SF MINIMUM /1/200 SF MAXIMUM 2428/400 = 6.0 MINIMUM 2428/200 = 12 MAXIMUM 8 SPACES/ INCLUDING 1 HC SPACE 10 SPACES/INCLUDING 1 HC
CAMA LAND USE CLASSIFICATION	DEVELOPED 547-Convenience Grocery

SITE LEGEND

SIGNAGE
YARD LIGHTS
LIGHT POLE
POWER POLE
TRAFFIC DIRECTIONAL ARROW
ACC HANDICAP PARKING STALL
HANDICAP RAMPS
PHASE LINE
PROPERTY LINE
RIGHT-OF-WAY LINE
LOT LINE
EASEMENT LINE
CENTERLINE
CONCRETE
PAINT STRIPING
FENCE

GRAPHIC SCALE
20 0 10 20 40
1 inch = 20 ft.

DATE 12/12/13
Rev 4/17/2014
CADD DWG. NO.
DRAWN BY nrw
CHECKED BY nrw
REVISIONS

WATSON LAND DESIGN SERVICES, PLLC
3650 ROGERS ROAD, #245
WAKE FOREST, NORTH CAROLINA 27587
919-453-1529/FAX 866-437-2610
NC CERTIFICATE OF LICENSURE P-0493

NORTH CAROLINA PROFESSIONAL SEAL 11682 ENGINEER

SHERMAN ARCHITECTURE
PLLC
2411 LEMON SPRINGS ROAD, SANFORD, NORTH CAROLINA
(919)-775-2355

ADDITION AND RENOVATIONS
HAN-DEE HUGO #28
5002 MARKET STREET
WILMINGTON, NORTH CAROLINA
SITE & LANDSCAPE PLAN

SHEET
C101
OF

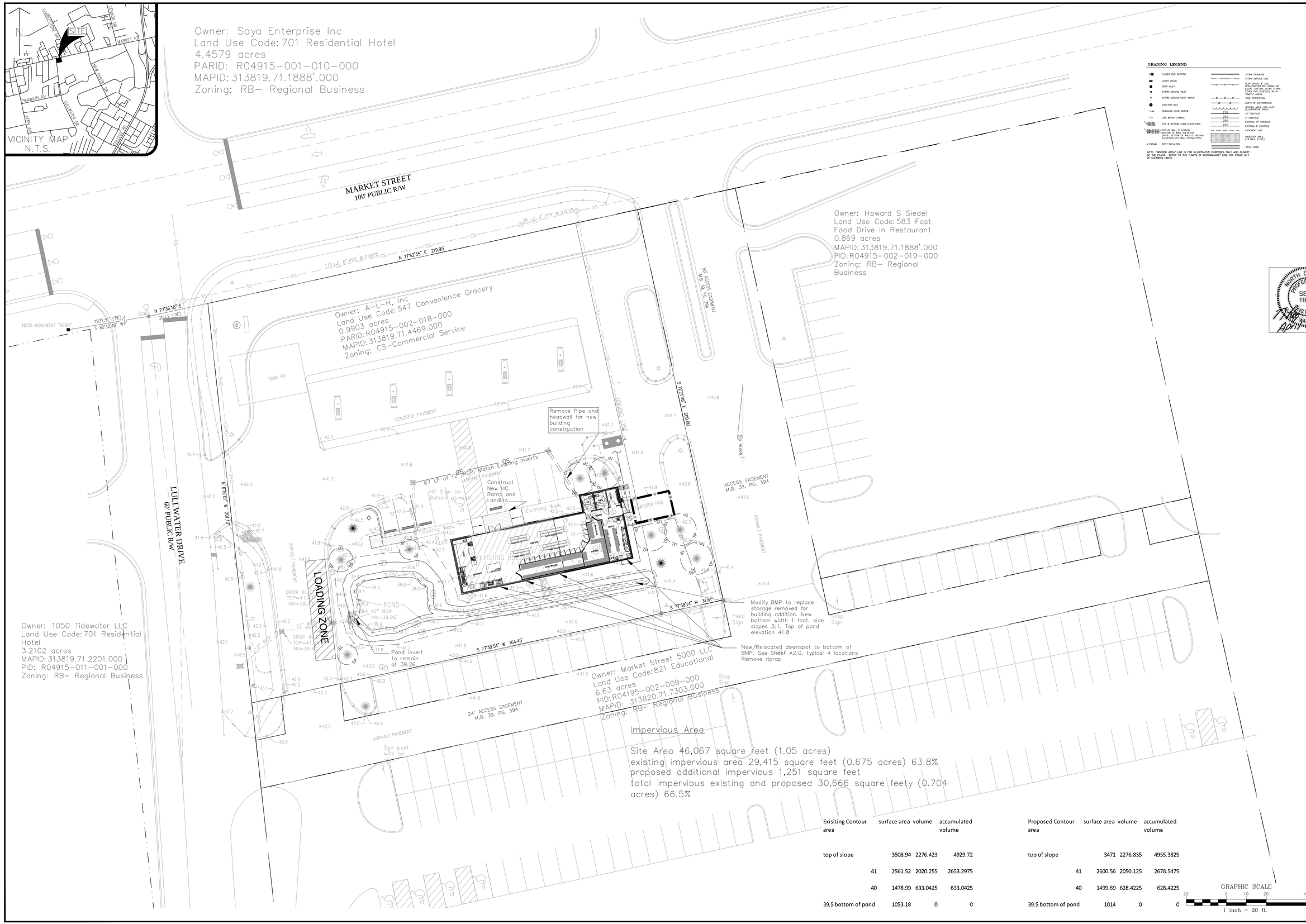

Impervious Area

Site Area 46,067 square feet (1.05 acres)
existing impervious area 29,415 square feet (0.675 acres) 63.8%
proposed additional impervious 1,251 square feet
total impervious existing and proposed 30,666 square feety (0.704 acres) 66.5%

Exisiting Contour area	surface area	volume	accumulated volume
top of slope	3508.94	2276.423	4929.72
41	2561.52	2020.255	2653.2975
40	1478.99	633.0425	633.0425
39.5 bottom of pond	1053.18	0	0

Proposed Contour area	surface area	volume	accumulated volume
top of slope	3471	2276.835	4955.3825
41	2600.56	2050.125	2678.5475
40	1499.69	628.4225	628.4225
39.5 bottom of pond	1014	0	0

DATE 12/12/13
Rev 4/17/2014

CADD DWG. NO.

DRAWN BY
nrw

CHECKED BY
nrw

REVISIONS

WATSON LAND DESIGN SERVICES, PLLC
3650 ROGERS ROAD, #245
WAKE FOREST, NORTH CAROLINA 27587
919-453-1529/FAX 866-437-2610
NC CERTIFICATE OF LICENSURE P-0493

NORTH CAROLINA PROFESSIONAL SEAL 11682 ENGINEER

SHERMAN ARCHITECTURE
PLLC
2411 LEMON SPRINGS ROAD, SANFORD, NORTH CAROLINA
(919)-775-2355

ADDITION AND RENOVATIONS
HAN-DEE HUGO #28
5002 MARKET STREET
WILMINGTON, NORTH CAROLINA
GRADING AND STORMWATER PLAN

SHEET
C102
OF

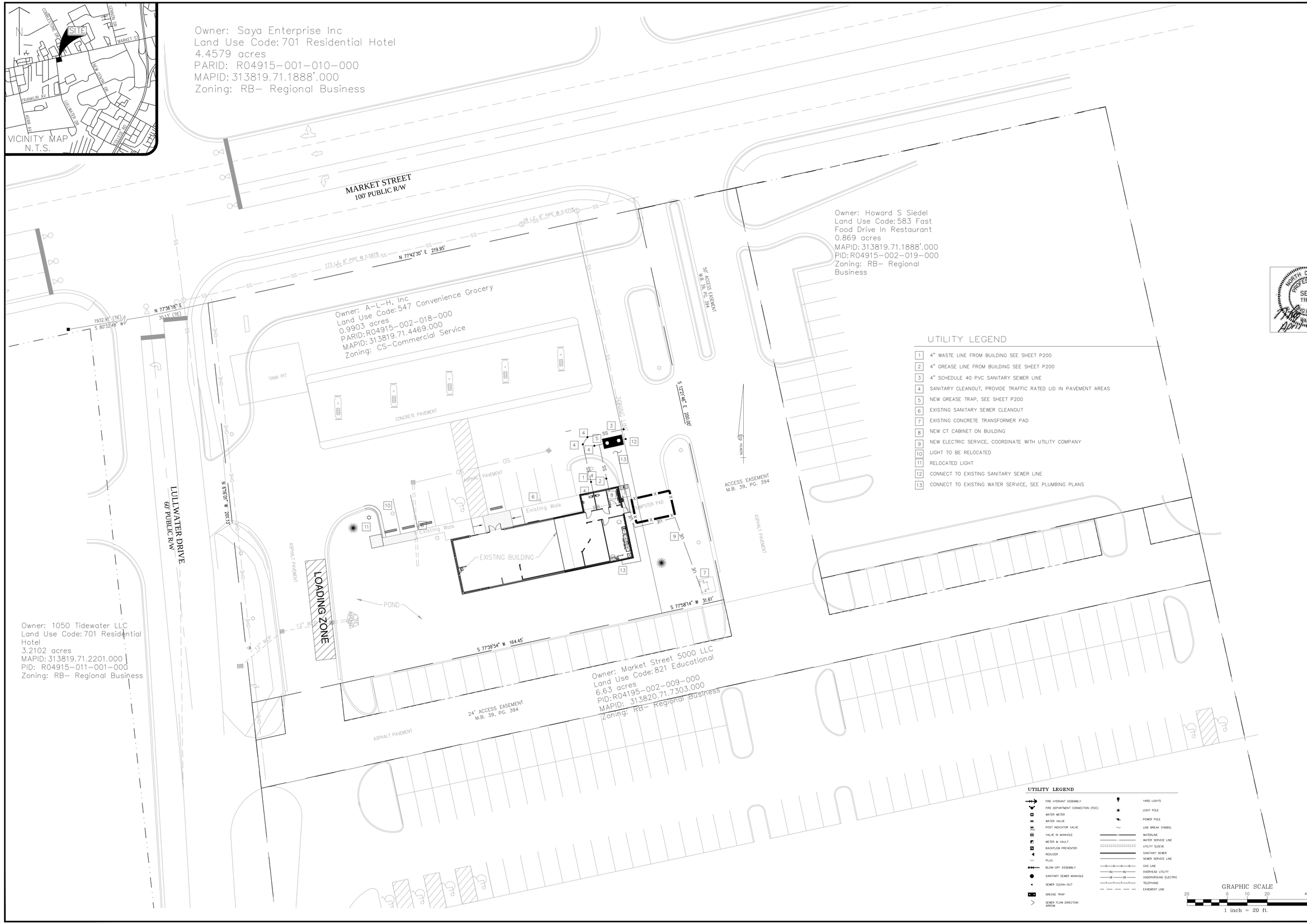

UTILITY LEGEND

1. 4" WASTE LINE FROM BUILDING SEE SHEET P200
2. 4" GREASE LINE FROM BUILDING SEE SHEET P200
3. 4" SCHEDULE 40 PVC SANITARY SEWER LINE
4. SANITARY CLEANOUT, PROVIDE TRAFFIC RATED LID IN PAVEMENT AREAS
5. NEW GREASE TRAP, SEE SHEET P200
6. EXISTING SANITARY SEWER CLEANOUT
7. EXISTING CONCRETE TRANSFORMER PAD
8. NEW CT CABINET ON BUILDING
9. NEW ELECTRIC SERVICE, COORDINATE WITH UTILITY COMPANY
10. LIGHT TO BE RELOCATED
11. RELOCATED LIGHT
12. CONNECT TO EXISTING SANITARY SEWER LINE
13. CONNECT TO EXISTING WATER SERVICE, SEE PLUMBING PLANS

UTILITY LEGEND

FIRE HYDRANT ASSEMBLY	YARD LIGHTS
FIRE DEPARTMENT CONNECTION (FDC)	LIGHT POLE
WATER METER	POWER POLE
WATER VALVE	LINE BREAK SYMBOL
POST INDICATOR VALVE	WATERLINE
VALVE IN MANHOLE	WATER SERVICE LINE
METER & VAULT	UTILITY SLEEVE
BACKFLOW PREVENTER	SANITARY SEWER
REDUCER	SEWER SERVICE LINE
PLUG	GAS LINE
BLOW-OFF ASSEMBLY	OVERHEAD UTILITY
SANITARY SEWER MANHOLE	UNDERGROUND ELECTRIC
SEWER CLEAN-OUT	TELEPHONE
GREASE TRAP	EASEMENT LINE
SEWER FLOW DIRECTION ARROW	

DATE 12/12/13
Rev 4/17/2014

CADD DWG. NO.

DRAWN BY
nrw

CHECKED BY
nrw

REVISIONS

WATSON LAND DESIGN SERVICES, PLLC
3650 ROGERS ROAD, #245
WAKE FOREST, NORTH CAROLINA 27587
919-453-1529/FAX 866-437-2610
NC CERTIFICATE OF LICENSURE P-0493

NORTH CAROLINA PROFESSIONAL SEAL 11682 ENGINEER

SHERMAN ARCHITECTURE PLLC
2411 LEMON SPRINGS ROAD, SANFORD, NORTH CAROLINA
(919)-775-2355

ADDITION AND RENOVATIONS
HAN-DEE HUGO #28
5002 MARKET STREET
WILMINGTON, NORTH CAROLINA

UTILITY PLAN

SHEET
C103
OF

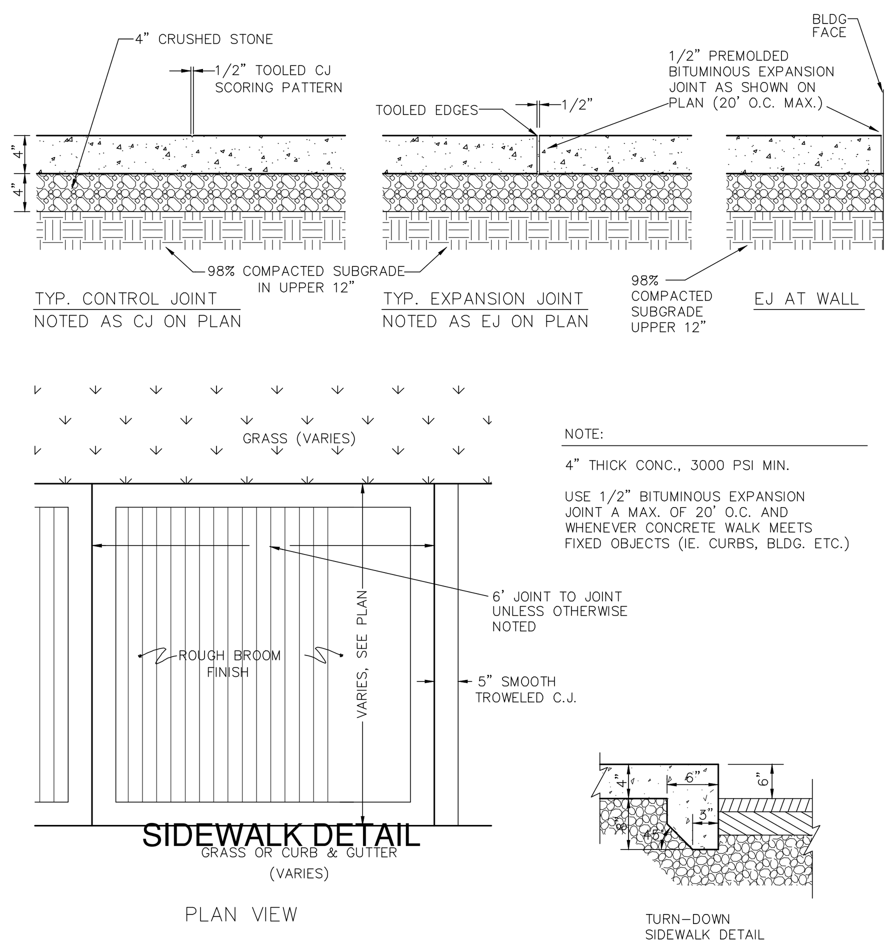

SIDEWALK DETAIL

PLAN VIEW

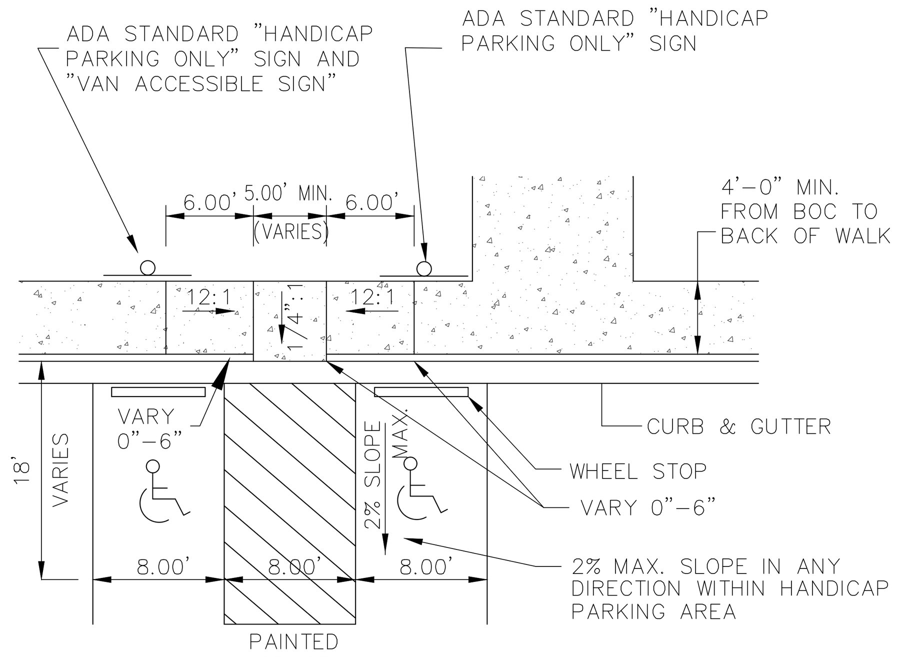

NOTES:
1. VARY CURB HEIGHT 0" TO 6", WHERE NOTED.
2. CURB AND GUTTER, WALK, AND CURB TO BE POURED SEPARATELY.
3. RAMP AREA SHALL RECEIVE A DETECTABLE WARNING SURFACE AND COLOR TO CONTRAST WITH ADJOINING SURFACES PER ADA REQUIREMENTS.

TYPICAL HANDICAP PARKING RAMP AND SIGN LOCATIONS

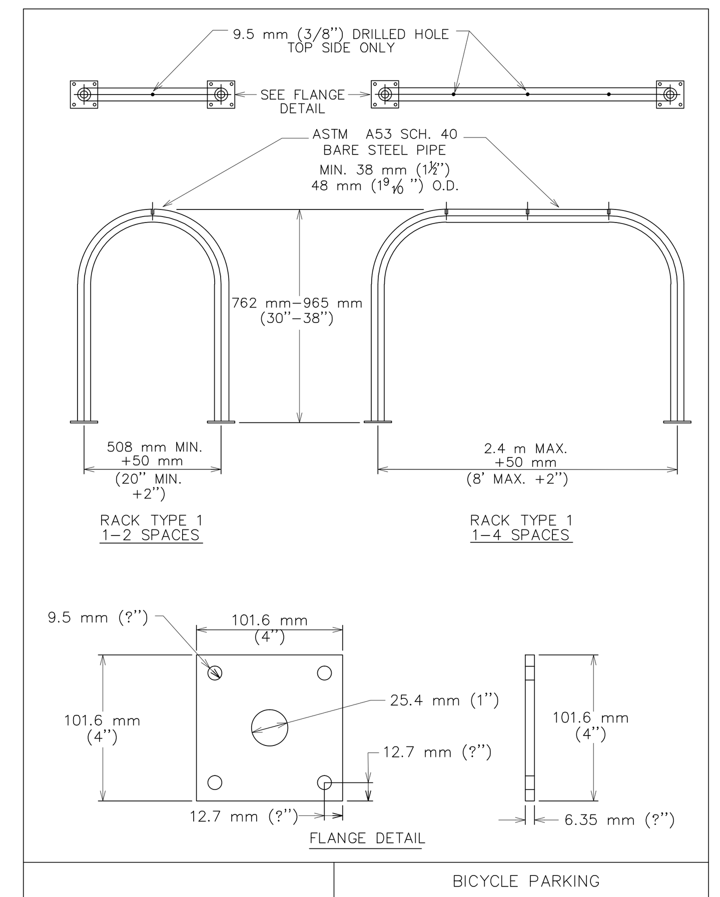

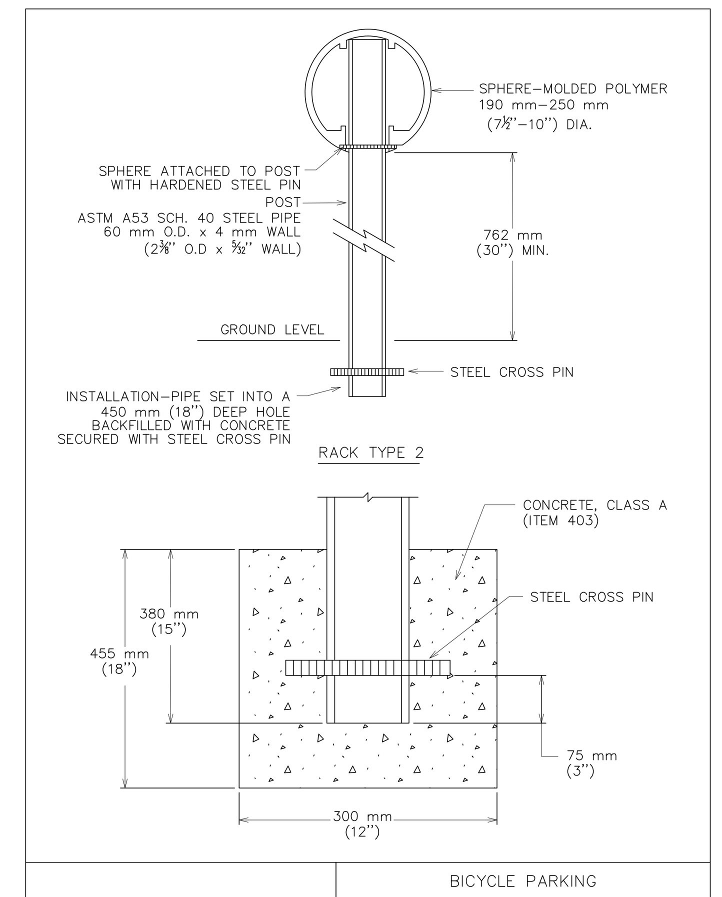

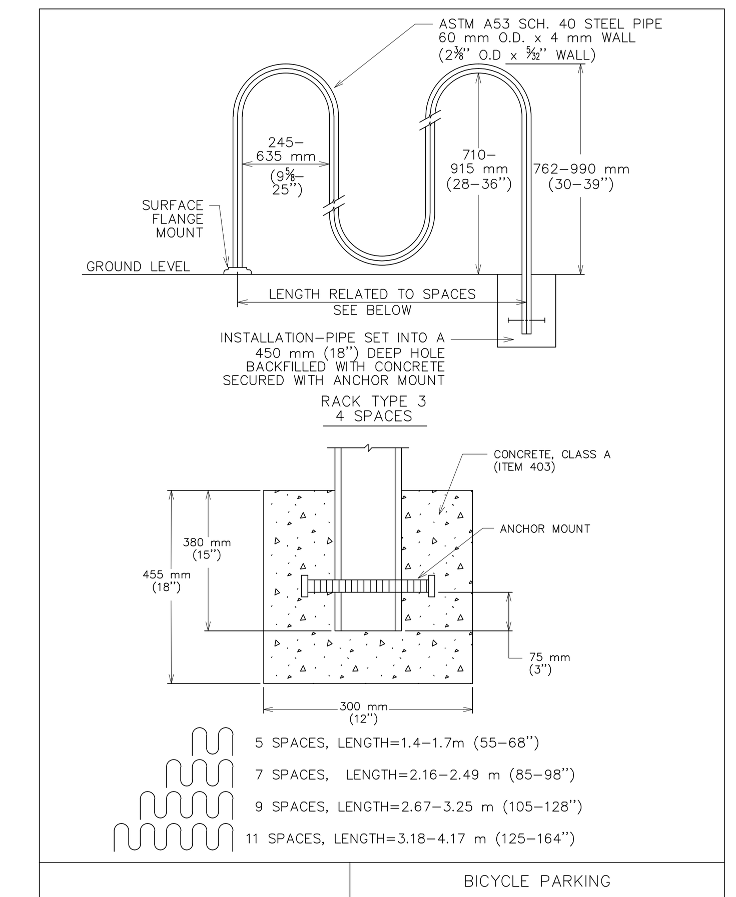

NOTE: CURB STOP SHALL BE SLOTTED, FOR DRAINAGE

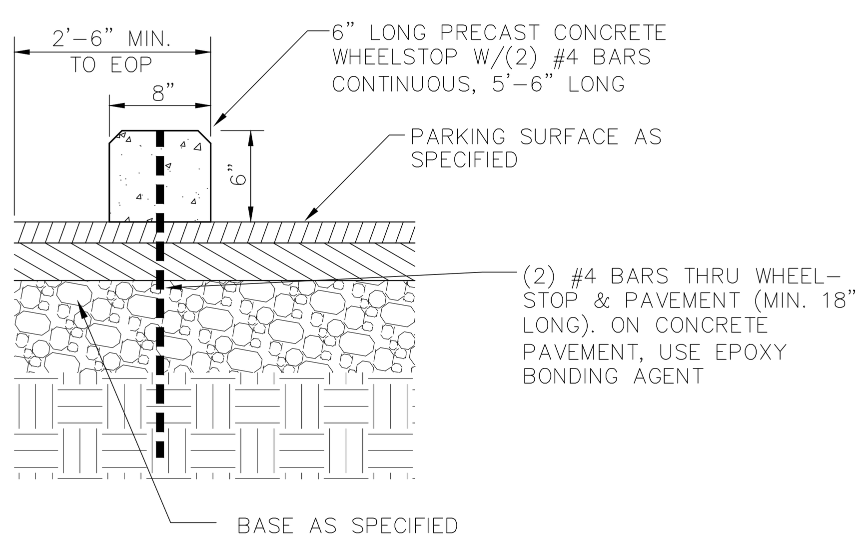

INSTALLATION AND MAINTENANCE OF LANDSCAPING

ALL LANDSCAPING SHALL BE OF NURSERY STOCK QUALITY AND SHALL BE INSTALL IN A SOUND WORKMANLIKE MANNER AND ACCORDING TO ACCEPTED GOOD PLANTING PROCEDURES. ALL LANDSCAPING SHALL BE ADAPTABLE TO CLIMATE CONDITIONS OF THE AREA, AND CONSIDERATION SHALL BE GIVEN TO NOT PLANTING LARGE TREES NEAR UTILITIES. ALL LANDSCAPING SHALL BE MAINTAINED IN GOOD CONDITION AND IN ACCORDANCE WITH ALL PROVISIONS OF THIS ORDINANCE AS FOLLOWS:

1. ALL LANDSCAPING SHALL PRESENT AT ALL TIMES, A HEALTHY, NEAT, CLEAN, ORDERLY, DISEASE-FREE AND PEST-FREE APPEARANCE.
2. ALL LANDSCAPING SOIL AND FILL SHALL BE FREE FROM WEEDS, REFUSE, AND DEBRIS AT ALL TIMES.
3. LANDSCAPING ELEMENTS, SUCH AS WALLS AND FENCES, SHALL BE CONSTRUCTED IN A SOUND WORKMANLIKE MANNER, WITH ADEQUATE SUPPORT OR FOOTINGS AND SHALL BE REPAIRED OR REPLACED, AS NEEDED, TO PRESERVE AN ATTRACTIVE APPEARANCE AND TO FUNCTION AS INTENDED.
4. ANY DEAD PLANT MATERIAL OR MATERIAL WHICH FAILS TO SHOW HEALTHY GROWTH MUST BE REMOVED WITHIN THIRTY (30) DAYS.
5. REPLACEMENT OF REMOVED PLANT MATERIAL MUST TAKE PLACE WITHIN (90) DAYS OF REMOVAL OR NOTIFICATION BY THE CITY, WHICHEVER OCCURS FIRST.
6. ANY REPLACEMENT PLANT MATERIAL MUST MEET THE SIZE AND OTHER CHARACTERISTICS OF NEWLY PLANTED MATERIAL, AS REQUIRED IN THIS ORDINANCE.
7. MAINTENANCE OF ALL LANDSCAPING IS THE RESPONSIBILITY OF THE OWNERS, JOINTLY AND SEPARATELY.
8. TREES AND LARGE SHRUBS SHALL BE ADEQUATELY SUPPORTED, AS NECESSARY, USING STAKES AND GUYS. SUCH SUPPORTS SHALL BE DESIGNED SO AS TO PROTECT TREES AND SHRUBS FROM INJURY. TREES AHD SHRUBS SHALL BE FASTENED TO THE SUPPORT WITH AN ACCEPTABLE COMMERCIAL TREE TIE OF PLASTIC OR HOSE COVERED WIRE.
9. ANY LANDSCAPED AREA REQUIRED BY THIS ORDINANCE SHALL NOT BE ENCROACHED UPON BY ANY TYPE OF VEHICLE. ALL LANDSCAPED AREAS MUST BE PROTECTED BY AN ENCROACHMENT BARRIER. A VEHICLE MAY OVERHANG AN LANDSCAPED AREA PROVIDED THAT A MINIMUM WIDTH OF THREE (3) FEET IN HEIGHT.
10. THE MAXIMUM GROWTH HEIGHT OF ANY LANDSCAPING WITHIN THE SIGHT TRIANGLE SHALL BE THREE (3) FEET IN HEIGHT.

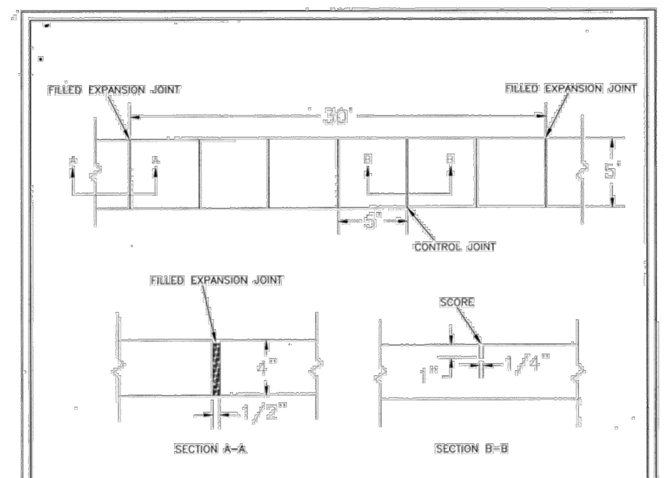

NOTES:
1. JOINT MATERIAL TO COMPLY WITH CURRENT NCDOT STANDARDS.
2. SANITARY SEWER CLEAN-OUTS, WATER METERS, MANHOLES, AND VALVE LIDS TO BE LOCATED OUTSIDE SIDEWALK WHERE FEASIBLE.
3. MINIMUM SIDEWALK WIDTH TO BE 6' MINIMUM IF PLACED AT BACK OF CURB.
4. CONCRETE FOR ALL SIDEWALKS (EXCEPT ANY PORTION CONTAIN WITHIN A DRIVEWAY APRON) SHALL BE CLASS "A" – 3,000 PSI.
5. MINIMUM REPLACEMENT FOR REPAIRS IS A 5' X 5' PANEL.
6. 4" STONE BASE MAY BE REQUIRED FOR POOR SOIL CONDITIONS
7. MINIMUM DEPTH FOR TUNNELING BELOW SIDEWALK IS 12"
8. MAX ADJACENT GROUND SLOPE WITHOUT RAILING IS 2:1
9. MIN GRADE FOR PROPER DRAINAGE IS 1% IN AT LEAST 1 DIRECTION. MAX CROSS SLOPE IS 2%. MAX LONGITUDINAL SLOPE IS 8.3%, 10% IF LIMITED BY EXISTING CONDITIONS, OR NO GREATER THAN THE SLOPE OF THE EXISTING ADJACENT ROAD.

DATE: OCTOBER, 2010	STANDARD DETAIL	CITY OF WILMINGTON NORTH CAROLINA
DRAWN: PB/JSR	SIDEWALK	CITY OF WILMINGTON ENGINEERING PO BOX 1810 WILMINGTON N.C. 28402 (910) 341-7807
CHECKED: DEC		
SCALE: NOT TO SCALE		SD 3-10

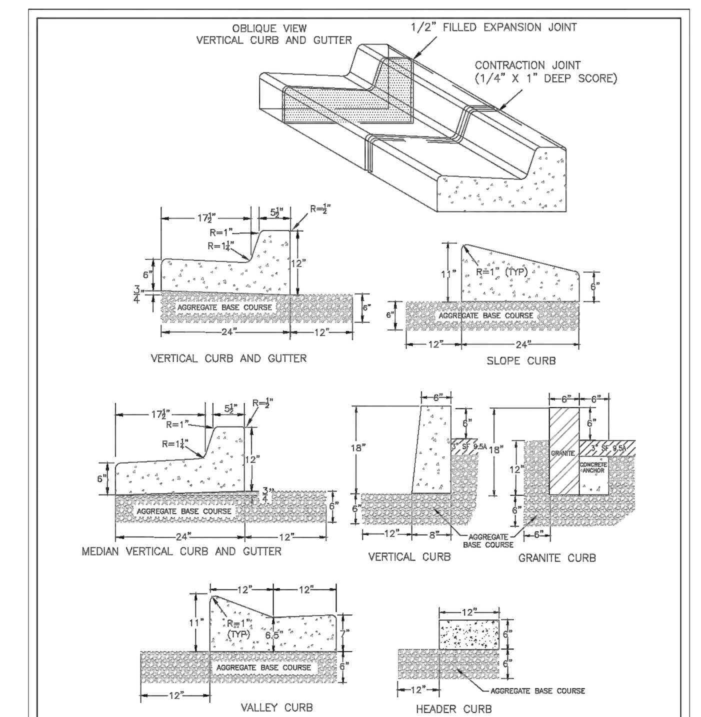

NOTES: 1. EXPANSION JOINT MATERIAL TO COMPLY WITH CURRENT NCDOT STANDARDS
2. 50' MAX EXPANSION JOINT SPACING, 10' MAX CONTRACTION JOINT SPACING
3. MINIMUM INSTALLATION LENGTH IS 5 FT.
4. CONCRETE TO BE 3000 PSI MIN
5. VERTICAL CURB AND GUTTER BASE CAN BE SLOPED 3/4" OR USE A FLAT BASE

DATE: AUGUST, 2011	STANDARD DETAIL	CITY OF WILMINGTON NORTH CAROLINA
DRAWN: PB/JSR	CURBING	CITY OF WILMINGTON ENGINEERING PO BOX 1810 WILMINGTON N.C. 28402 (910) 341-7807
CHECKED: DEC		
SCALE NOT TO SCALE		SD 3-11

NOTE:
THE CRITICAL ROOT ZONE (CRZ) OF A TREE IS WHERE THE MAJORITY OF A TREE'S ROOTS LAY. 85% OF MOST TREE ROOTS ARE FOUND IN THE TOP 24" OF THE SOIL AND SUPPLY THE MAJORITY OF NUTRIENTS AND WATER. GENERALLY, ROOTS SPREAD OUT 2-3X THE HEIGHT OF THE TREE.

NOTE:
CROWN OF THE TREE IS NEEDED FOR LEAF GROWTH TO PRODUCE OXYGEN, FILTER THE AIR, REDUCE WIND AND SOFTEN NOISE. DO NOT DISFIGURE CROWN WITH INTENSIVE PRUNING.

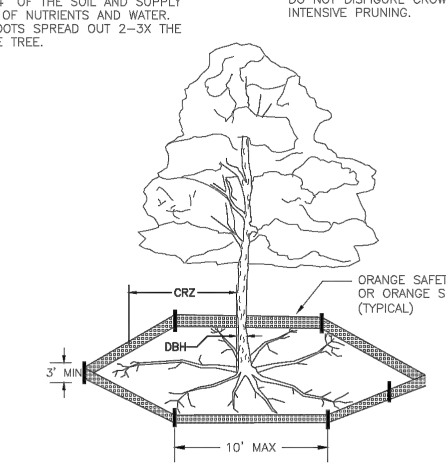

NOTES:
1. PROTECT CRITICAL ROOT ZONE (CRZ) OF TREES PRIOR TO CONSTRUCTION. CLEARLY MARK THE TREES AND ERECT A PROTECTIVE BARRIER AT THE CRZ. BARRIER SHALL BE MAINTAINED UNTIL CONSTRUCTION IS COMPLETE.
2. CRZ RADIUS IS 1 FT PER INCH OF TREE DIAMETER AT BREAST HEIGHT (DBH).
3. WHERE SIDEWALKS AND PATHWAYS PASS WITHIN CRZ, EXTRA CARE SHALL BE TAKEN TO AVOID DAMAGE TO THE ROOTS. ALTERNATE CONSTRUCTION METHODS, SUCH AS A REINFORCED SIDEWALK, SHALL BE IMPLEMENTED AS NECESSARY.
4. FOR ALL TREES, CUTTING OF LARGE STRUCTURAL ROOTS LOCATED NEAR THE BASE OF THE TRUNK IS PROHIBITED. DO NOT COMPACT SOIL BENEATH TREES. NO VEHICLE SHALL BE ALLOWED TO PARK UNDER TREES. NO HEAVY MATERIALS SHALL BE STORED BENEATH TREES. DAMAGING THE BARK WITH LAWNMOWERS, CONSTRUCTION EQUIPMENT, OR ANYTHING ELSE IS PROHIBITED. CONTRACTOR SHALL REPAIR DAMAGE TO TREES.
5. FAILING TO INSTALL OR MAINTAIN PROTECTION MEASURES MAY RESULT IN A STOP WORK ORDER AND FINE OF $500/DAY. DISTURBANCE OTHER THAN THAT ALLOWED ON THE APPROVED PLAN WILL REQUIRE OWNER TO POST A LETTER OF CREDIT FOR 3 YRS FOR TREE MITIGATION.

DATE: NOV, 2011	STANDARD DETAIL	CITY OF WILMINGTON NORTH CAROLINA
DRAWN BY JSR	TREE PROTECTION DURING CONSTRUCTION	CITY OF WILMINGTON ENGINEERING PO BOX 1810 WILMINGTON, NC 28402 (910) 341-7807
CHECKED BY BDR, P.E.		
SCALE NOT TO SCALE	SHEET 1 of 2	SD 15-09

Tree Protection Areas to have signage stating "TREE PROTECTION AREA, DO NOT ENTER" in English and Spanish

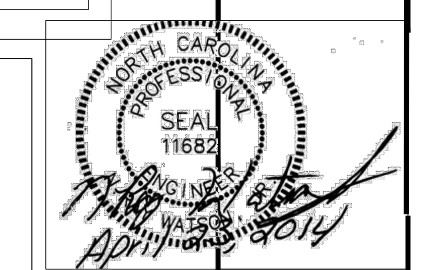

PLANTING NOTES

1. KEY REFERS TO PLANT LIST. WHERE THERE IS ONLY A KEY, THE QUANTITY IS ONE. WHERE THE KEY IS FOLLOWED BY A NUMBER, THE NUMBER IS THE QUANTITY REQUIRED FOR THE INDICATED PLANT BED.
2. LOCATE PLANTS AND PLANTING BEDS BY USING SCALED DIMENSIONS FROM STREET, PROPERTY LINES, ETC.
3. ALL PLANTS SHALL MEET OR EXCEED THE MINIMUM STANDARDS SET BY THE U.S.D.A. STANDARD FOR NURSERY STOCK SPONSORED BY THE AMERICAN ASSOCIATION OF NURSERYMEN, INC., WASHINGTON, D.C.
4. MULCH ALL PLANTING BEDS WITH A MINIMUM OF 3" CLEAN PINE STRAW.
5. LANDSCAPE CONTRACTOR SHALL VERIFY UTILITY AND STORM DRAINAGE LOCATIONS IN THE FIELD, PRIOR TO BEGINNING CONSTRUCTION.
6. APPLY PRE-EMERGENT HERBICIDE TO ALL PLANTING BEDS PER MANUFACTURER'S SPECIFICATIONS.
7. LANDSCAPE CONTRACTOR SHALL SOD ALL AREAS DESIGNATED ON PLAN WITH REBEL FESCUE MIXTURE OR EQUAL.

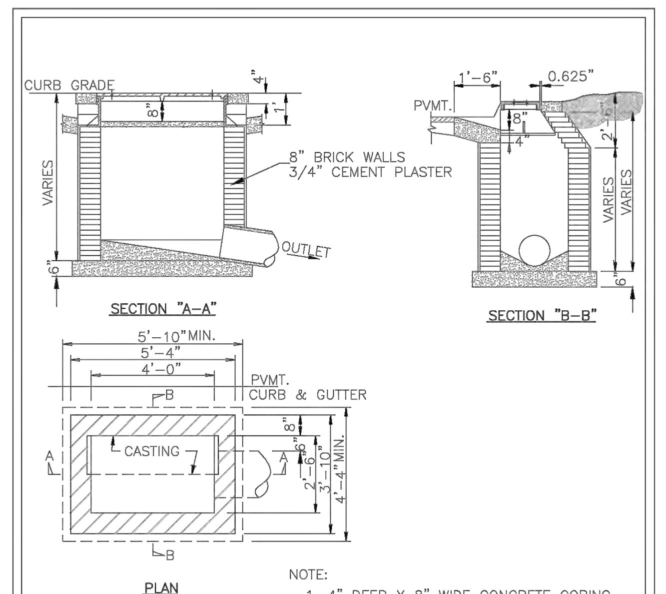

NOTE:
1. 4" DEEP X 8" WIDE CONCRETE COPING ALL AROUND BASIN CASTING.
2. ALL CONCRETE TO BE CLASS "A"
3. FOR CASTING DETAIL SEE SD 2-16

DATE: 2006	STANDARD DETAIL	CITY OF WILMINGTON NORTH CAROLINA
DRAWN BY JSR/CMR	CATCH BASIN	CITY OF WILMINGTON ENGINEERING PO BOX 1810 WILMINGTON, NC 28402 (910) 341-7807
CHECKED BY B.P., P.E.		
SCALE NOT TO SCALE		SD 2-01

1. No plantings over thirty (30) inches in height allowed in vision clearance.
2. Protection from vehicular traffic provided around all landscaping with a minimum height of six (6) inches.
3. Owner is responsible for maintenance to ensure plant material lives and prospers.
4. Planting plans shall be approved by Landscape Designer prior to installation.
5. Landscaping shall be required at the ends of all parking rows.
6. A low buffer shall be required where parking is within fifty (50) feet of the Right-of-Way.
7. Landscaped islands shall be a minimun width of twelve (12) feet (back of curb to back of curb) and a minimum of two hundred and sixteen (216) square feet.
8. A minimum of fifteen (15) trees 2 inches or greater in diameter as measured 6 inches above ground per disturbed acre.
9. For recommended Plant List see "Landscape" T-10.4.

DATE: APRIL, 2008	STANDARD DETAIL	CITY OF WILMINGTON NORTH CAROLINA
DRAWN BY JSR	LANDSCAPE NOTES	CITY OF WILMINGTON ENGINEERING PO BOX 1810 WILMINGTON, NC 28402 (910) 341-7807
CHECKED BY B.P., P.E.		
SCALE NOT TO SCALE		SD 15-14

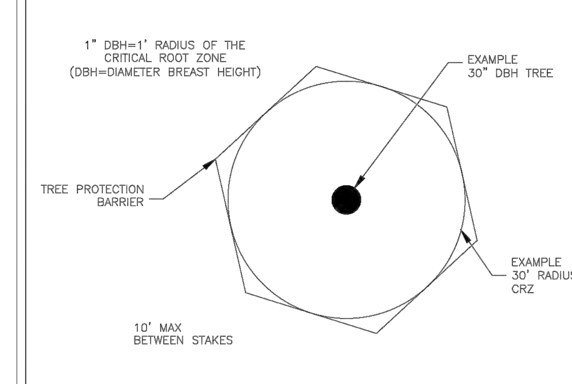

NOTE: DRAWINGS ARE NOT TO SCALE. USE AS A GUIDE FOR DETERMINING MINIMUM CRZ.

DATE: NOV, 2011	STANDARD DETAIL	CITY OF WILMINGTON NORTH CAROLINA
DRAWN BY JSR	TREE PROTECTION DURING CONSTRUCTION	CITY OF WILMINGTON ENGINEERING PO BOX 1810 WILMINGTON, NC 28402 (910) 341-7807
CHECKED BY BDR, P.E.		
SCALE NOT TO SCALE	SHEET 2 of 2	SD 15-09

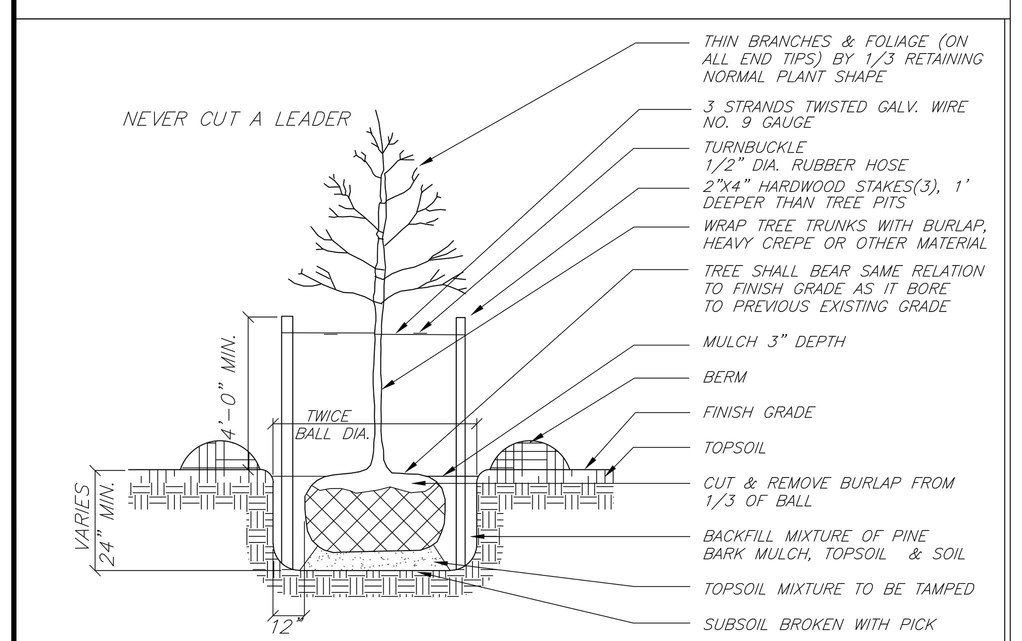

TREE PLANTING DETAIL
NOT TO SCALE

DATE	12/12/13 Rev 4/17/2014
CADD DWG. NO.	
DRAWN BY	nrw
CHECKED BY	nrw
REVISIONS	

WATSON LAND DESIGN SERVICES, PLLC
3650 ROGERS ROAD, #245
WAKE FOREST, NORTH CAROLINA 27587
919-453-1529/FAX 866-437-2610
NC CERTIFICATE OF LICENSURE P-0493

SHERMAN ARCHITECTURE PLLC
2411 LEMON SPRINGS ROAD, SANFORD, NORTH CAROLINA
(919)-775-2355

ADDITION AND RENOVATIONS
HAN-DEE HUGO #28
5002 MARKET STREET
WILMINGTON, NORTH CAROLINA

DETAIL SHEET

SHEET C200

OF