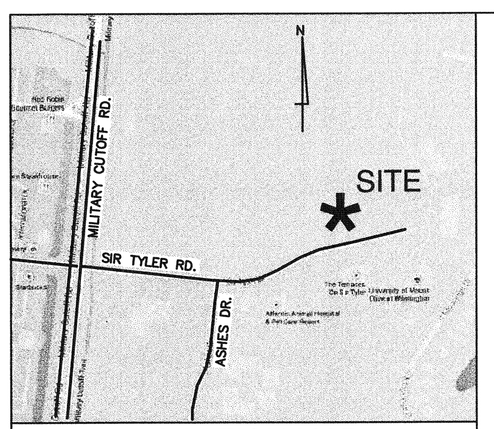

LOCATION MAP NTS

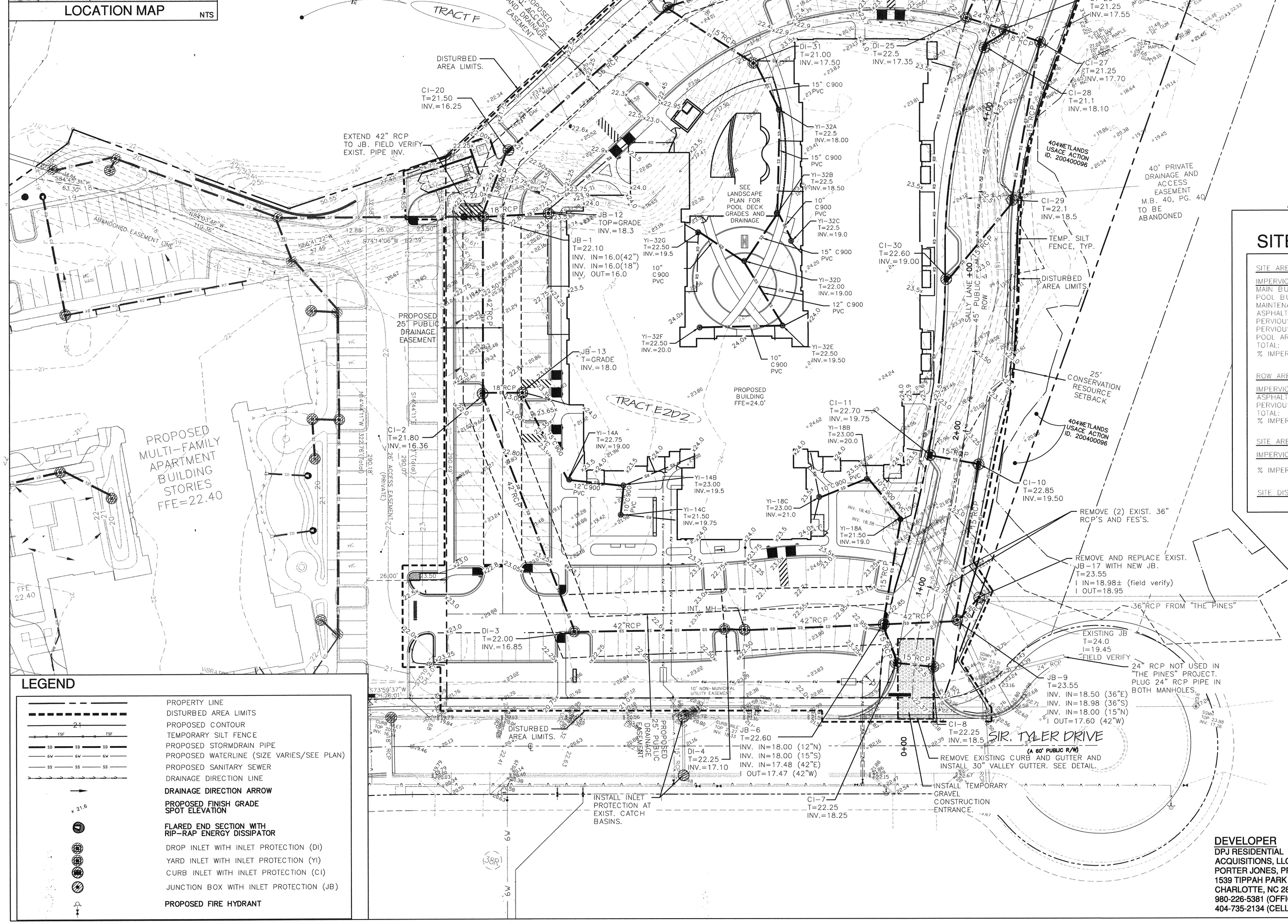

LEGEND

- PROPERTY LINE
- DISTURBED AREA LIMITS
- PROPOSED CONTOUR
- TEMPORARY SILT FENCE
- PROPOSED STORMDRAIN PIPE
- PROPOSED WATERLINE (SIZE VARIES/SEE PLAN)
- PROPOSED SANITARY SEWER
- DRAINAGE DIRECTION LINE
- DRAINAGE DIRECTION ARROW
- PROPOSED FINISH GRADE SPOT ELEVATION
- FLARED END SECTION WITH RIP-RAP ENERGY DISSIPATOR
- DROP INLET WITH INLET PROTECTION (DI)
- YARD INLET WITH INLET PROTECTION (YI)
- CURB INLET WITH INLET PROTECTION (CI)
- JUNCTION BOX WITH INLET PROTECTION (JB)
- PROPOSED FIRE HYDRANT

SITE DATA

SITE AREA:	159,337 SF (3.66 AC)
IMPERVIOUS AREA:	
MAIN BUILDING:	41,226 SF
POOL BUILDING:	212 SF
MAINTENANCE BUILDING:	234 SF
ASPHALT, CONCRETE, CURB AND GUTTER:	25,752 SF
PERVIOUS CONCRETE PARKING:	25,455 SF
PERVIOUS CONCRETE SIDEWALKS:	9,373 SF
POOL AREA:	4,207 SF
TOTAL:	106,459 SF
% IMPERVIOUS:	66.81%
ROW AREA:	22,079 SF (0.51 AC)
IMPERVIOUS AREA:	
ASPHALT, CONCRETE, CURB AND GUTTER:	16,068 SF
PERVIOUS CONCRETE SIDEWALKS:	400 SF
TOTAL:	16,468 SF
% IMPERVIOUS:	74.58%
SITE AREA + ROW AREA:	181,416 SF (4.17 AC)
IMPERVIOUS AREA:	122,706 SF
% IMPERVIOUS:	67.63%
SITE DISTURBED AREA: 3.88 AC	

CAMA LAND USE: WATER SHED RESOURCE PROTECTION

For each open utility cut of City streets, a $325 permit shall be required from the City prior to occupancy and/or project acceptance.

CITY OF WILMINGTON NORTH CAROLINA
Public Services • Engineering Division
STORMWATER MANAGEMENT PLAN
Date:_____ Permit #_____
Signed: _____

Approved Construction Plan

	Name	Date
Planning		
Traffic		
Fire		

NCDENR PWSS WATER PERMIT #: _____
WATER CAPACITY: _____GPD
DWQ SEWER PERMIT #: _____
SEWER CAPACITY: _____GPD
SEWER SHED # AND PLANT: _____
SEWER TO FLOW THROUGH NEI: YES or NO (CIRCLE ONE)

SCALE: 1" = 30'
0 30 60 90

DEVELOPER
DPJ RESIDENTIAL ACQUISITIONS, LLC
PORTER JONES, PRINCIPAL
1539 TIPPAH PARK COURT
CHARLOTTE, NC 28205
980-226-5381 (OFFICE)
404-735-2134 (CELL)

©2015 NORRIS & TUNSTALL

© 2016 CLINE DESIGN ASSOCIATES, PA EXPRESSLY RESERVES ITS COMMON LAW COPYRIGHT AND OTHER PROPERTY RIGHTS IN THESE PLANS. THESE PLANS ARE NOT TO BE REPRODUCED, CHANGED OR COPIED IN ANY FORM OR MANNER WHATSOEVER, NOR ARE THEY TO BE ASSIGNED TO ANY THIRD PARTY WITHOUT FIRST OBTAINING THE EXPRESSED WRITTEN PERMISSION AND CONSENT OF CLINE DESIGN ASSOCIATES, PA.

CLINE DESIGN
125 N. Harrington St.
Raleigh, NC 27603
919/833-6413
919/836-1280 FAX
ClineDesignAssoc.com
Attn: Chris Tingler

NORRIS & TUNSTALL CONSULTING ENGINEERS, P.C.
1902 MARKET STREET
WILMINGTON, NC 28401
PHONE (910) 343-9653
FAX (910) 343-9604
LICENCE #C-3641

DPJ Residential
The Flats at Main
1829 Sir Tyler Drive
Wilmington, North Carolina

TRC SET

NORTH CAROLINA PROFESSIONAL SEAL 19851 ENGINEER JOHN S. TUNSTALL

PROJECT: 015117	
DATE: 09.15.16	
REVISIONS:	DATE

DRAWN BY: NKS
CHECKED BY: JST

CG3.0
NT #15104

GRADING, STORM DRAINAGE, AND EROSION CONTROL PLAN

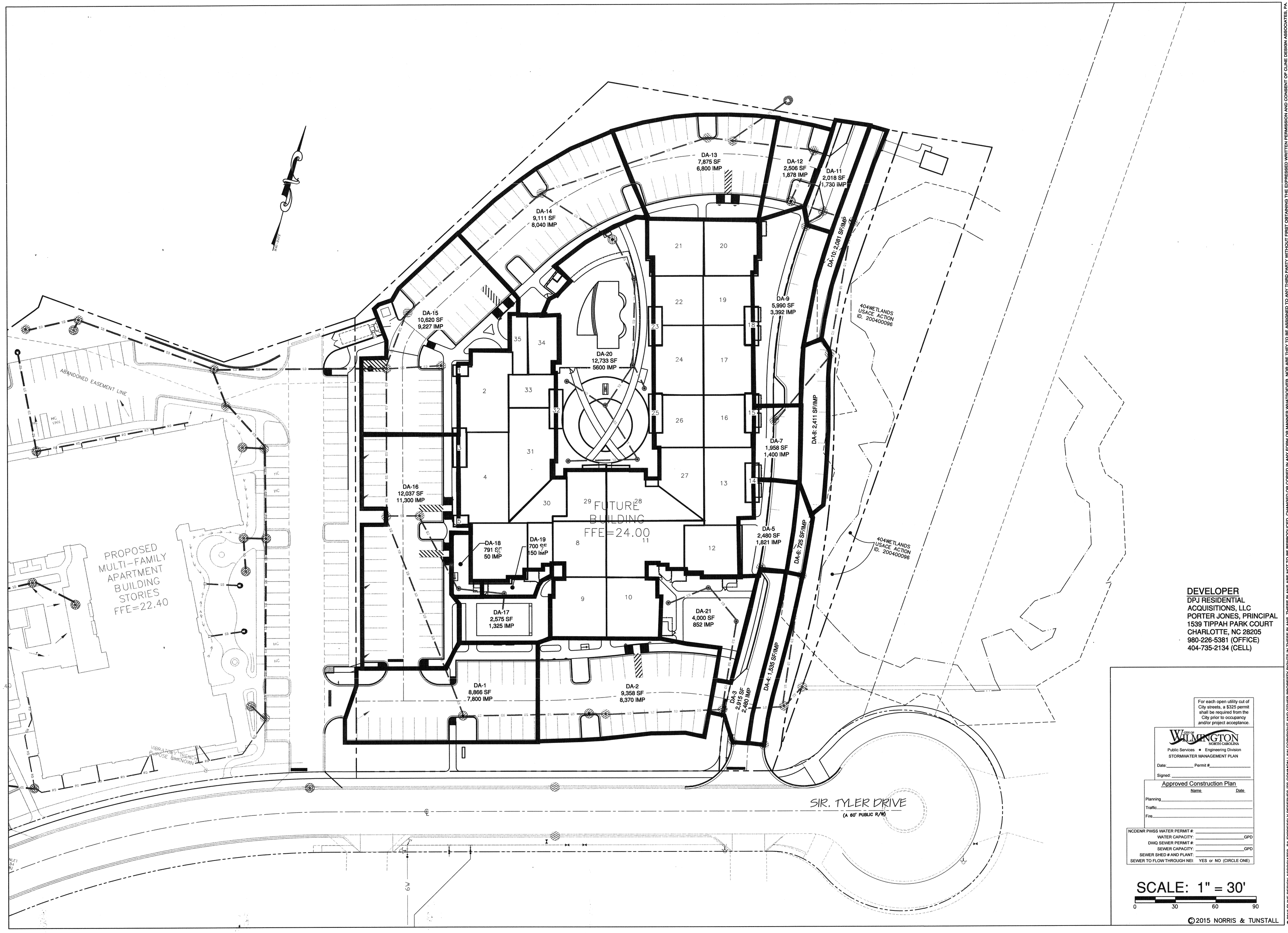

DEVELOPER
DPJ RESIDENTIAL
ACQUISITIONS, LLC
PORTER JONES, PRINCIPAL
1539 TIPPAH PARK COURT
CHARLOTTE, NC 28205
980-226-5381 (OFFICE)
404-735-2134 (CELL)

For each open utility cut of City streets, a $325 permit shall be required from the City prior to occupancy and/or project acceptance.

CITY OF WILMINGTON NORTH CAROLINA
Public Services • Engineering Division
STORMWATER MANAGEMENT PLAN
Date:_____ Permit #_____
Signed: _____

Approved Construction Plan
Name Date
Planning_____
Traffic_____
Fire_____

NCDENR PWSS WATER PERMIT #: _____
WATER CAPACITY: _____GPD
DWQ SEWER PERMIT #: _____
SEWER CAPACITY: _____GPD
SEWER SHED # AND PLANT: _____
SEWER TO FLOW THROUGH NEI: YES or NO (CIRCLE ONE)

SCALE: 1" = 30'
0 30 60 90

©2015 NORRIS & TUNSTALL

CLINE DESIGN
125 N. Harrington St.
Raleigh, NC 27603
919/833-6413
919/836-1280 FAX
ClineDesignAssoc.com
Attn: Chris Tingler

NORRIS & TUNSTALL
CONSULTING ENGINEERS, P.C.
902 MARKET STREET
WILMINGTON, NC 28401
PHONE (910) 343-9653
FAX (910) 343-9604
LICENCE #C-3641

DPJ Residential
The Flats at Main
1829 Sir Tyler Drive
Wilmington, North Carolina

TRC SET

NORTH CAROLINA PROFESSIONAL SEAL 19851 ENGINEER JOHN S. TUNSTALL

PROJECT: 015117
DATE: 09.15.16
REVISIONS: DATE

DRAWN BY: NKS
CHECKED BY: JST

CG3.1

DRAINAGE AREA PLAN
NT #15104

© 2015 CLINE DESIGN ASSOCIATES, PA EXPRESSLY RESERVES ITS COMMON LAW COPYRIGHT AND OTHER PROPERTY RIGHTS IN THESE PLANS. THESE PLANS ARE NOT TO BE REPRODUCED, CHANGED OR COPIED IN ANY FORM OR MANNER WHATSOEVER, NOR ARE THEY TO BE ASSIGNED TO ANY THIRD PARTY WITHOUT FIRST OBTAINING THE EXPRESSED WRITTEN PERMISSION AND CONSENT OF CLINE DESIGN ASSOCIATES, PA.

F:\Projects\2016\16045 The Pines\16045 Plans\dwg\16045.master.r3.dwg, 9/15/2016 11:46:45 AM

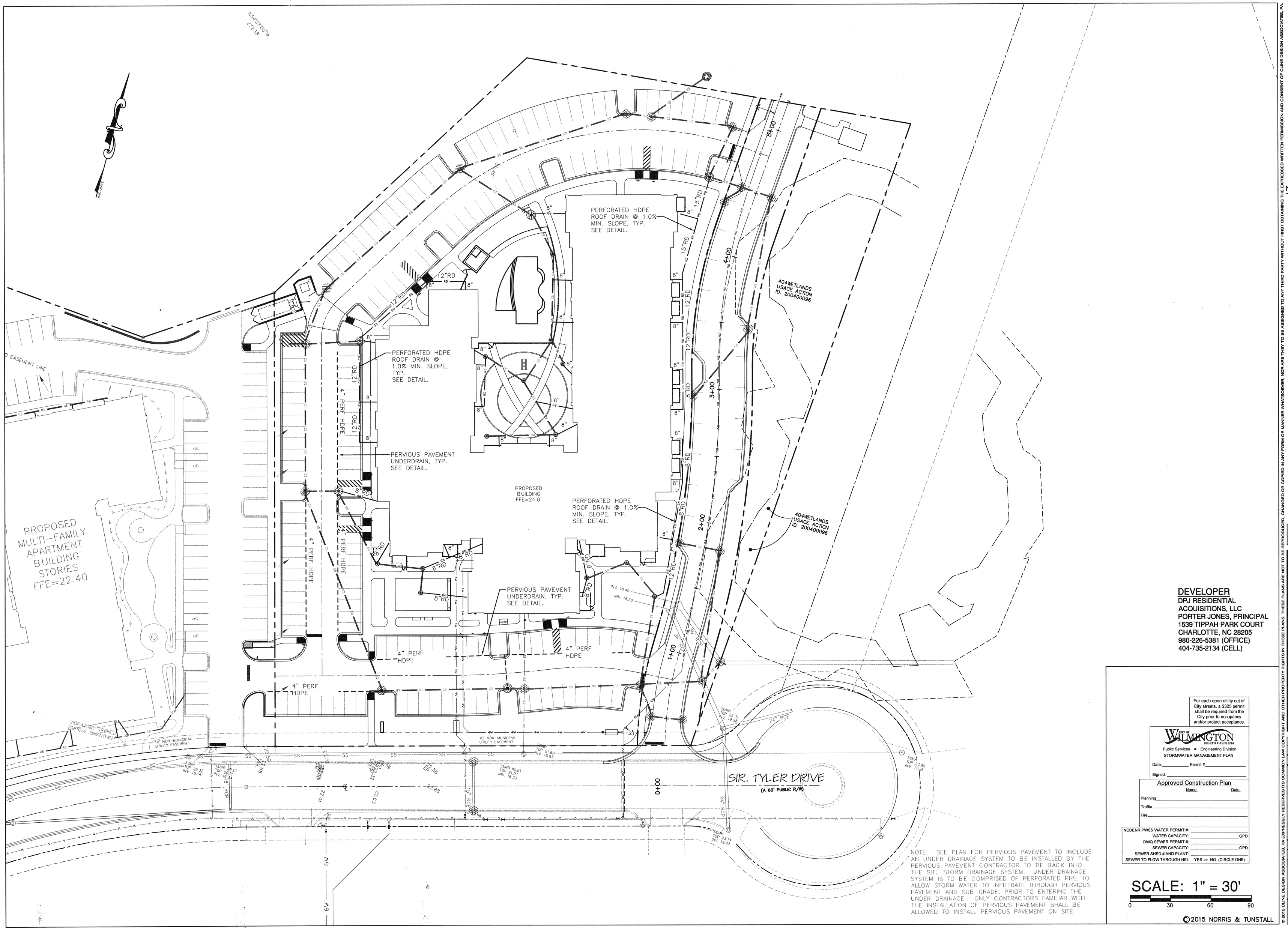

NOTE: SEE PLAN FOR PERVIOUS PAVEMENT TO INCLUDE AN UNDER DRAINAGE SYSTEM TO BE INSTALLED BY THE PERVIOUS PAVEMENT CONTRACTOR TO TIE BACK INTO THE SITE STORM DRAINAGE SYSTEM. UNDER DRAINAGE SYSTEM IS TO BE COMPRISED OF PERFORATED PIPE TO ALLOW STORM WATER TO INFILTRATE THROUGH PERVIOUS PAVEMENT AND SUB GRADE, PRIOR TO ENTERING THE UNDER DRAINAGE. ONLY CONTRACTORS FAMILIAR WITH THE INSTALLATION OF PERVIOUS PAVEMENT SHALL BE ALLOWED TO INSTALL PERVIOUS PAVEMENT ON SITE.

DEVELOPER
DPJ RESIDENTIAL ACQUISITIONS, LLC
PORTER JONES, PRINCIPAL
1539 TIPPAH PARK COURT
CHARLOTTE, NC 28205
980-226-5381 (OFFICE)
404-735-2134 (CELL)

For each open utility cut of City streets, a $325 permit shall be required from the City prior to occupancy and/or project acceptance.

CITY OF WILMINGTON NORTH CAROLINA
Public Services • Engineering Division
STORMWATER MANAGEMENT PLAN
Date:_____ Permit #_____
Signed: _____

Approved Construction Plan

	Name	Date
Planning		
Traffic		
Fire		

NCDENR PWSS WATER PERMIT #: _____
WATER CAPACITY: _____GPD
DWQ SEWER PERMIT #: _____
SEWER CAPACITY: _____GPD
SEWER SHED # AND PLANT: _____
SEWER TO FLOW THROUGH NEI: YES or NO (CIRCLE ONE)

SCALE: 1" = 30'
0 30 60 90

©2015 NORRIS & TUNSTALL

CLINE DESIGN
125 N. Harrington St.
Raleigh, NC 27603
919/833-6413
919/836-1280 FAX
ClineDesignAssoc.com
Attn: Chris Tingler

NORRIS & TUNSTALL
CONSULTING ENGINEERS, P.C.
902 MARKET STREET
WILMINGTON, NC 28401
PHONE (910) 343-9653
FAX (910) 343-9604
LICENCE #C-3641

DPJ Residential
The Flats at Main
1829 Sir Tyler Drive
Wilmington, North Carolina

TRC SET

NORTH CAROLINA PROFESSIONAL SEAL 19851 ENGINEER JOHN S. TUNSTALL

PROJECT: 015117
DATE: 09.15.16
REVISIONS: DATE

DRAWN BY: NKS
CHECKED BY: JST

CG3.2

ROOF DRAINAGE PLAN
NT #15104

© 2015 CLINE DESIGN ASSOCIATES, PA EXPRESSLY RESERVES ITS COMMON LAW COPYRIGHT AND OTHER PROPERTY RIGHTS IN THESE PLANS. THESE PLANS ARE NOT TO BE REPRODUCED, CHANGED OR COPIED IN ANY FORM OR MANNER WHATSOEVER, NOR ARE THEY TO BE ASSIGNED TO ANY THIRD PARTY WITHOUT FIRST OBTAINING THE EXPRESSED WRITTEN PERMISSION AND CONSENT OF CLINE DESIGN ASSOCIATES, PA.

F:\Projects\2016\16045 The Pines\16045 Plans\dwg\16045.master.r3.dwg, 9/15/2016 11:52:05 AM

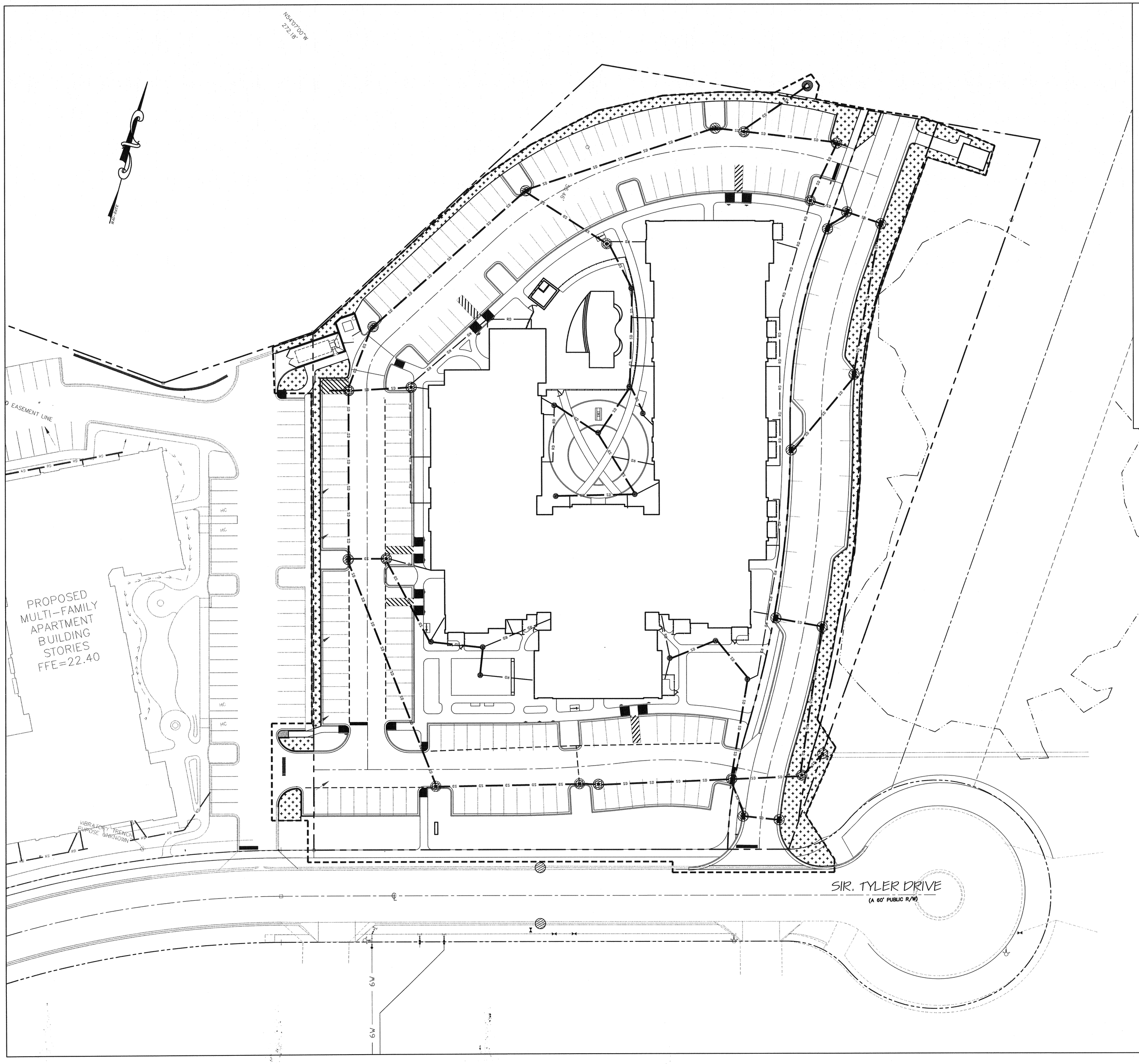

LEGEND	1. GROUND STABILIZATION		
	SITE AREA DESCRIPTION	STABILIZATION TIME FRAME	STABILIZATION TIME FRAME EXCEPTIONS
	PERIMETER DIKES, SWALES, DITCHES AND SLOPES	7 DAYS	NONE
	HIGH QUALITY WATER (HQW) ZONES.	7 DAYS	NONE
	SLOPES STEEPER THAN 3:1	7 DAYS	IF SLOPES ARE 10' OR LESS IN LENGTH AND ARE NOT STEEPER THAN 2:1, 14 DAYS ARE ALLOWED
	SLOPES 3:1 OR FLATTER	14 DAYS	7 DAYS FOR SLOPES GREATER THAN 50' IN LENGTH.
	ALL OTHER AREAS WITH SLOPES FLATTER THAN 4:1	14 DAYS	NONE (EXCEPT FOR PERIMETERS AND HQW ZONES).

2. BUILDING WASTES HANDLING
- NO PAINT OR LIQUID WASTES IN STREAM OR STORM DRAINS
- DEDICATED AREA FOR DEMOLITION, CONSTRUCTION AND OTHER WASTES MUST BE LOCATED 50' FROM STORM DRAINS AND STREAMS UNLESS NO ALTERNATIVE IS AVAILABLE.
- EARTHEN MATERIALS STOCKPILES MUST BE LOCATED 50' FROM STORM DRAINS AND STREAMS UNLESS NO REASONABLE ALTERNATIVE IS AVAILABLE
- CONCRETE MATERIALS MUST BE CONTROLLED TO AVOID CONTACT WITH SURFACE WATERS, WETLANDS, OR BUFFERS.

3. INSPECTIONS
- SAME WEEKLY INSPECTION REQUIREMENTS
- SAME RAIN GUAGE AND INSPECTIONS AFTER 0.5" RAIN EVENT
- INSPECTIONS ARE ONLY REQUIRED DURING "NORMAL BUISNESS HOURS"
- RECORDS MUST BE KEPT FOR 3 YEARS AND AVAILABLE UPON REQUEST
- ELECTRONICALLY AVAILABLE RECORDS MAY BE SUBSTITUTED UNDER CERTAIN CONDITIONS

4. SEDIMENT BASINS
- OUTLET STRUCTURES MUST WITHDRAW FROM BASIN SURFACE UNLESS DRAINAGE AREA IS LESS THAN ONE ACRE
- USE ONLY DWQ APPROVED FLOCCULANTS

SEE SHEET CG5.0 FOR SEEDING SPECIFICATION

DEVELOPER
DPJ RESIDENTIAL
ACQUISITIONS, LLC
PORTER JONES, PRINCIPAL
1539 TIPPAH PARK COURT
CHARLOTTE, NC 28205
980-226-5381 (OFFICE)
404-735-2134 (CELL)

For each open utility cut of City streets, a $325 permit shall be required from the City prior to occupancy and/or project acceptance.

CITY OF WILMINGTON NORTH CAROLINA
Public Services • Engineering Division
STORMWATER MANAGEMENT PLAN
Date:_____ Permit #_____
Signed: _____

Approved Construction Plan
Name Date
Planning_____
Traffic_____
Fire_____

NCDENR PWSS WATER PERMIT #: _____
WATER CAPACITY: _____GPD
DWQ SEWER PERMIT #: _____
SEWER CAPACITY: _____GPD
SEWER SHED # AND PLANT: _____
SEWER TO FLOW THROUGH NEI: YES or NO (CIRCLE ONE)

SCALE: 1" = 30'
0 30 60 90

©2015 NORRIS & TUNSTALL

CLINE DESIGN
125 N. Harrington St.
Raleigh, NC 27603
919/833-6413
919/836-1280 FAX
ClineDesignAssoc.com
Attn: Chris Tingler

NORRIS & TUNSTALL
CONSULTING ENGINEERS, P.C.
902 MARKET STREET
WILMINGTON, NC 28401
PHONE (910) 343-9653
FAX (910) 343-9604
LICENCE #C-3641

© 2016 CLINE DESIGN ASSOCIATES, PA EXPRESSLY RESERVES ITS COMMON LAW COPYRIGHT AND OTHER PROPERTY RIGHTS IN THESE PLANS. THESE PLANS ARE NOT TO BE REPRODUCED, CHANGED OR COPIED IN ANY FORM OR MANNER WHATSOEVER, NOR ARE THEY TO BE ASSIGNED TO ANY THIRD PARTY WITHOUT FIRST OBTAINING THE EXPRESSED WRITTEN PERMISSION AND CONSENT OF CLINE DESIGN ASSOCIATES, PA.

DPJ Residential
The Flats at Main
1829 Sir Tyler Drive
Wilmington, North Carolina

TRC SET

NORTH CAROLINA PROFESSIONAL SEAL 19851 ENGINEER JOHN S. TUNSTALL III

PROJECT: 015117	
DATE: 09.15.16	
REVISIONS:	DATE
DRAWN BY: NKS	
CHECKED BY: JST	

CG3.3

SEEDING PLAN

NT #15104

F:\Projects\2016\16045 The_Pines\16045 Plans\dwg\16045.master.r3.dwg, 9/15/2016 11:53:14 AM

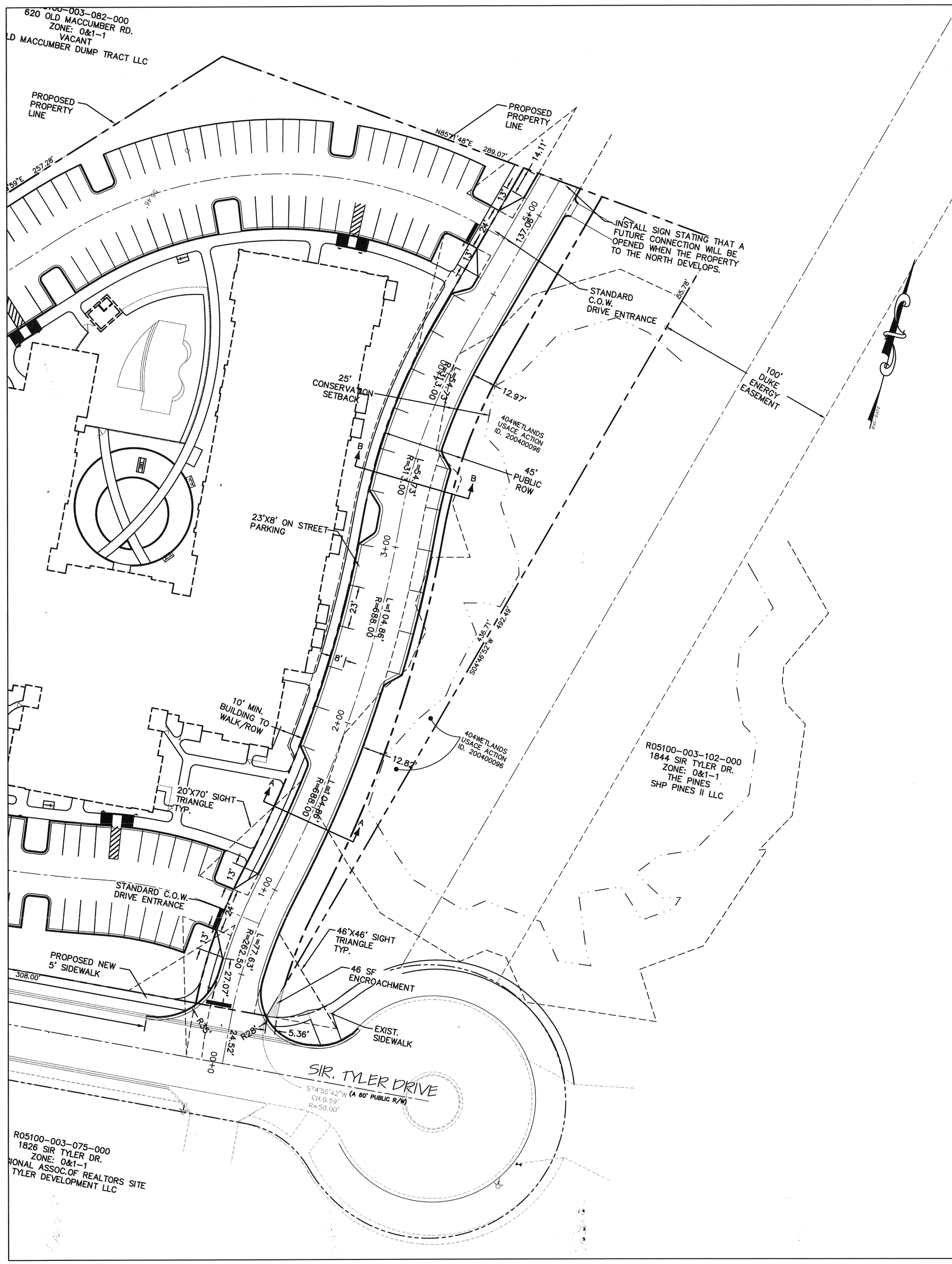

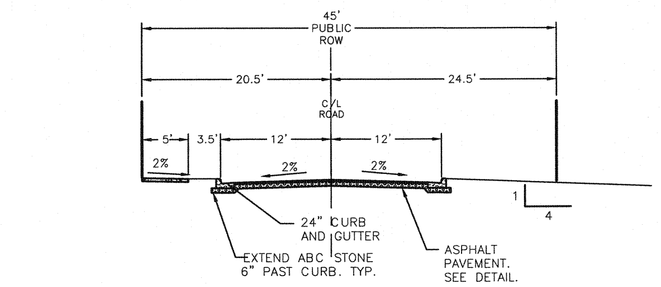

PROPOSED STREET SECTION

SECTION A-A NTS

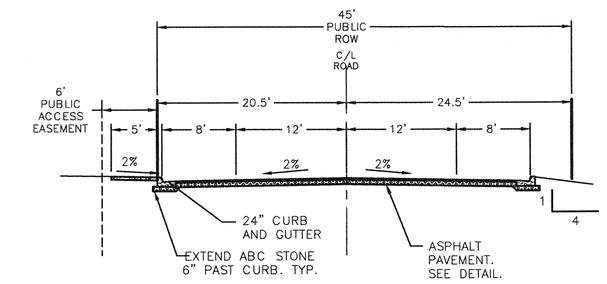

PROPOSED STREET SECTION WITH ON STREET PARKING

SECTION B-B NTS

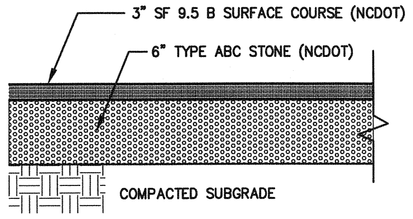

NOTE: PAVEMENT SECTION MAY VARY DEPENDING UPON FIELD CONDITIONS. CONTRACTOR SHALL COORDINATE w/OWNER & GEOTECHNICAL ENGINEER TO DETERMINE ACTUAL PAVEMENT SECTION.

ASPHALT PAVEMENT SECTION

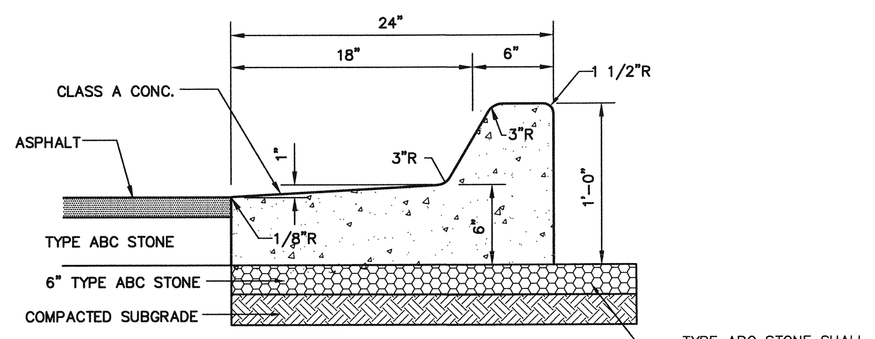

NOTE: CURB TYPE DEPENDS ON GRADES SHOWN ON GRADING PLAN. GRADES INDICATING FALL AWAY FROM CURB SHALL BE SPILL OFF TYPE CURB. GRADES INDICATING CURB ACCEPTING FLOW SHALL BE FLOW LINE TYPE.

24" CURB AND GUTTER SECTION (SPILL-OFF)

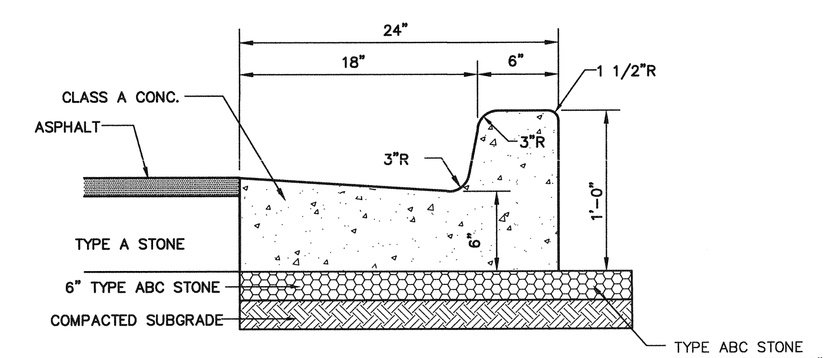

NOTE: CURB TYPE DEPENDS ON GRADES SHOWN ON GRADING PLAN. GRADES INDICATING FALL AWAY FROM CURB SHALL BE SPILL OFF TYPE CURB. GRADES INDICATING CURB ACCEPTING FLOW SHALL BE FLOW LINE TYPE.

24" CURB AND GUTTER SECTION (FLOW-LINE)

DEVELOPER
DPJ RESIDENTIAL
ACQUISITIONS, LLC
PORTER JONES, PRINCIPAL
1539 TIPPAH PARK COURT
CHARLOTTE, NC 28205
980-226-5381 (OFFICE)
404-735-2134 (CELL)

For each open utility cut of City streets, a $325 permit shall be required from the City prior to occupancy and/or project acceptance.

CITY OF WILMINGTON NORTH CAROLINA
Public Services • Engineering Division
STORMWATER MANAGEMENT PLAN
Date:_____ Permit #_____
Signed: _____

Approved Construction Plan
Name Date
Planning_____
Traffic_____
Fire_____

NCDENR PWSS WATER PERMIT #: _____
WATER CAPACITY: _____GPD
DWQ SEWER PERMIT #: _____
SEWER CAPACITY: _____GPD
SEWER SHED # AND PLANT: _____
SEWER TO FLOW THROUGH NEI: YES or NO (CIRCLE ONE)

SCALE: 1" = 30'

0 30 60 90

©2015 NORRIS & TUNSTALL

CLINE DESIGN
125 N. Harrington St.
Raleigh, NC 27603
919/833-6413
919/836-1280 FAX
ClineDesignAssoc.com
Attn: Chris Tingler

NORRIS & TUNSTALL
CONSULTING ENGINEERS, P.C.
902 MARKET STREET
WILMINGTON, NC 28401
PHONE (910) 343-9653
FAX (910) 343-9604
LICENCE #C-3641

© 2015 CLINE DESIGN ASSOCIATES, PA EXPRESSLY RESERVES ITS COMMON LAW COPYRIGHT AND OTHER PROPERTY RIGHTS IN THESE PLANS. THESE PLANS ARE NOT TO BE REPRODUCED, CHANGED OR COPIED IN ANY FORM OR MANNER WHATSOEVER, NOR ARE THEY TO BE ASSIGNED TO ANY THIRD PARTY WITHOUT FIRST OBTAINING THE EXPRESSED WRITTEN PERMISSION AND CONSENT OF CLINE DESIGN ASSOCIATES, PA.

DPJ Residential
The Flats at Main
1829 Sir Tyler Drive
Wilmington, North Carolina

TRC SET

NORTH CAROLINA PROFESSIONAL SEAL 19851 ENGINEER JOHN S. TUNSTALL

PROJECT: 015117
DATE: 09.15.16
REVISIONS: DATE

DRAWN BY: NKS
CHECKED BY: JST

CG3.4

ROW LAYOUT PLAN
NT #15104

F:\Projects\2016\16045 The Pines\16045 Plans\dwg\16045.master.r3.dwg, 9/15/2016 12:55:11 PM

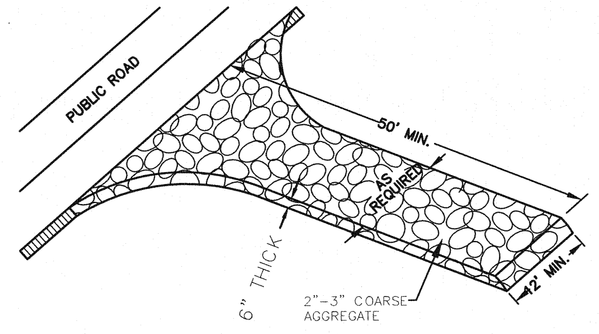

NOT TO SCALE

1 TEMPORARY GRAVELLED CONSTRUCTION ENTRANCE

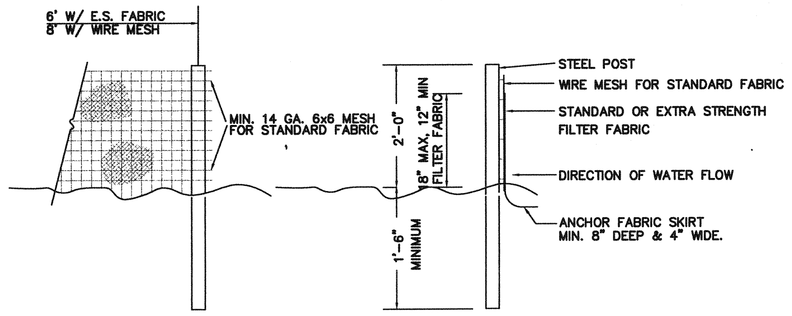

NOTES:

1. SYN. FENCE FABRIC SHALL BE MIN. OF 30" IN WIDTH WITH 30 LB/IN TENSILE STRENGTH FOR STANDARD FABRIC AND 50 LB/IN FOR EXTRA STRENGTH.
2. FABRIC SHALL BE CONTINUOUS LENGTH. IF JOINTS ARE NECESSARY, LAP FABRIC POST TO POST.
3. STEEL POST SHALL BE MIN 4' IN HEIGHT AND BE OF THE SELF-FASTENER STEEL ANGLE TYPE.

NOT TO SCALE

2 TEMPORARY SILT FENCE

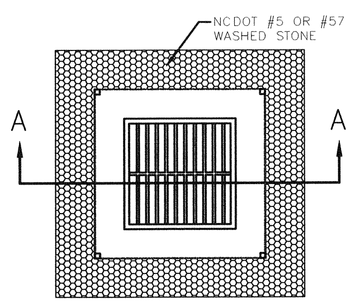

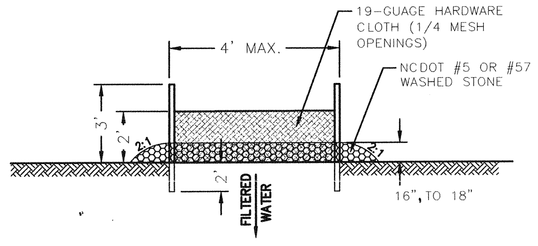

SECTION A-A

CONSTRUCTION SEQUENCE:
1. UNIFORMLY GRADE A SHALLOW DEPRESSION APPROACHING THE INLET.
2. DRIVE 5' STEEL POST 2' INTO THE GROUND SURROUNDING THE INLET. SPACE POST EVENLY AROUND THE PERIMETER OF THE INLET, A MAXIMUM OF 4' APART.
3. SURROUND THE POST WITH WIRE MESH HARDWARE CLOTH. SECURE THE WIRE MESH TO THE STEEL POST AT THE TOP, MIDDLE AND BOTTOM. PLACING A 2' FLAP OF THE WIRE MESH UNDER THE GRAVEL FOR ANCHORING IS RECOMMENDED.
4. PLACE CLEAN GRAVEL (NCDOT #5 OR #57 STONE) ON A 2:1 SLOPE WITH A HEIGHT OF 16" AROUND THE WIRE, AND SMOOTH TO AN EVEN GRADE.
5. ONCE THE CONTRIBUTING DRAINAGE AREA HAS BEEN STABILIZED, REMOVE ACCUMULATED SEDIMENT, AND ESTABLISH FINAL GRADING ELEVATIONS.
6. COMPACT THE AREA PROPERLY AND STABILIZE IT WITH GROUNDCOVER.

MAINTENANCE:
INSPECT INLETS AT LEAST WEEKLY AND AFTER EACH SIGNIFICANT (1/2 INCH OR GREATER) RAINFALL EVENT. CLEAR THE MESH WIRE OF ANY DEBRIS OR OTHER OBJECTS TO PROVIDE ADEQUATE FLOW FOR SUBSEQUENT RAINS. TAKE CARE NOT TO DAMAGE OR UNDERCUT THE WIRE MESH DURING SEDIMENT REMOVAL. REPLACE STONE AS NEEDED.

NOT TO SCALE

3 HARDWARE CLOTH AND GRAVEL INLET PROTECTION

4

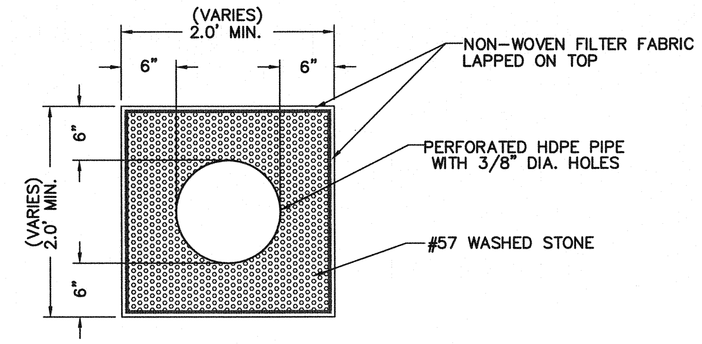

NOT TO SCALE

5 INFILTRATION TRENCH FOR HDPE ROOF DRAIN PIPE DETAIL

SKIMMER NOTE:
SKIMMER MUST FLOAT ON TOP OF WATER TO WORK PROPERLY. CONTRACTOR SHALL VERIFY THAT THE BARREL LENGTH WILL ALLOW SKIMMER TO FLOAT AT EMERGENCY SPILLWAY ELEVATION.

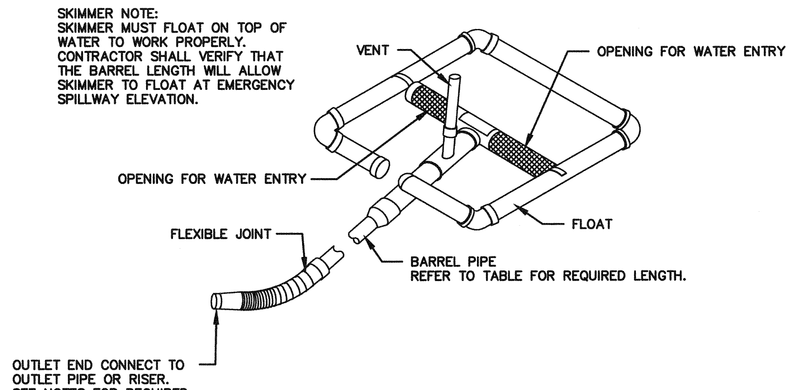

NOTES:
1. 5" FAIRCLOTH SKIMMER
2. SKIMMER SIZE 5.0 INCH
3. ORIFICE DIAMETER= 4.2 INCH

NOT TO SCALE

6 STANDARD SKIMMER DETAIL

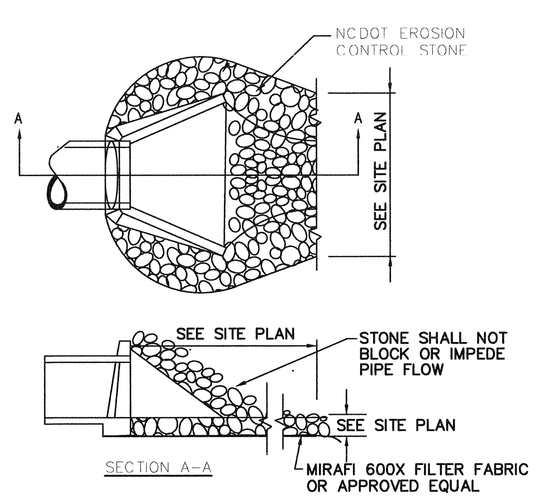

NOTE: FILTER FABRIC AND STONE SHALL BE TOED UNDER FLARED END SECTION

7 FES INLET PROTECTION

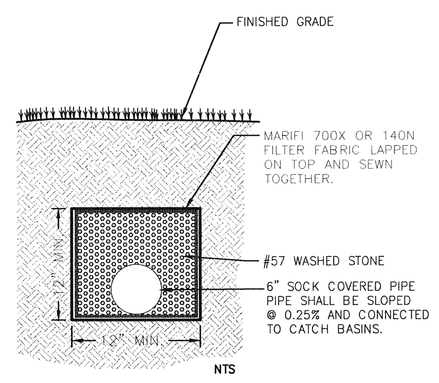

NOTE: TRENCH DRAIN SOCK PIPE SHALL BE INSTALLED ALONG ALL STORMDRAIN RCP PIPE.

NOT TO SCALE

TRENCH DRAIN SOCK PIPE DETAIL

EROSION CONTROL NOTES AND MAINTENANCE PLAN:

1. ALL EROSION AND SEDIMENT CONTROL MEASURES WILL BE CHECKED FOR STABILITY AND OPERATION FOLLOWING EVERY RUNOFF-PRODUCING RAINFALL, BUT IN NO CASE, LESS THAN ONCE EVERY WEEK AND WITHIN 24 HOURS OF EVERY HALF-INCH RAINFALL.

2. ALL POINTS OF EGRESS WILL HAVE CONSTRUCTION ENTRANCES THAT WILL BE PERIODICALLY TOP-DRESSED WITH AN ADDITIONAL 2 INCHES OF #4 STONE TO MAINTAIN PROPER DEPTH. THEY WILL BE MAINTAINED IN A CONDITION TO PREVENT MUD OR SEDIMENT FROM LEAVING THE SITE. IMMEDIATELY REMOVE OBJECTIONABLE MATERIAL SPILLED WASHED OR TRACKED ONTO THE CONSTRUCTION ENTRANCE OR ROADWAYS.

3. SEDIMENT WILL BE REMOVED FROM HARDWARE CLOTH AND GRAVEL INLET PROTECTION, BLOCK AND GRAVEL INLET PROTECTION, ROCK DOUGHNUT INLET PROTECTION AND ROCK PIPE INLET PROTECTION WHEN THE DESIGNED STORAGE CAPACITY HAS BEEN HALF FILLED WITH SEDIMENT. ROCK WILL BE CLEANED OR REPLACED WHEN THE SEDIMENT POOL NO LONGER DRAINS AS DESIGNED. DEBRIS WILL BE REMOVED FROM THE ROCK AND HARDWARE CLOTH TO ALLOW PROPER DRAINAGE. SILT SACKS WILL BE EMPTIED ONCE A WEEK AND AFTER EVERY RAIN EVENT. SEDIMENT WILL BE REMOVED FROM AROUND BEAVER DAMS, DANDY SACKS AND SOCKS ONCE A WEEK AND AFTER EVERY RAIN EVENT.

4. DIVERSION DITCHES WILL BE CLEANED OUT IMMEDIATELY TO REMOVE SEDIMENT OR OBSTRUCTIONS FROM THE FLOW AREA. THE DIVERSION RIDGES WILL ALSO BE REPAIRED. SWALES MUST BE TEMPORARILY STABILIZED WITHIN 21 CALENDAR DAYS OF CEASE OF ANY PHASE OF ACTIVITY ASSOCIATED WITH A SWALE.

5. SEDIMENT WILL BE REMOVED FROM BEHIND THE SEDIMENT FENCE WHEN IT BECOMES HALF FILLED. THE SEDIMENT FENCE WILL BE REPAIRED AS NECESSARY TO MAINTAIN A BARRIER. STAKES MUST BE STEEL. STAKE SPACING WILL BE 6 FEET MAX. WITH THE USE OF EXTRA STRENGTH FABRIC, WITHOUT WIRE BACKING. STAKE SPACING WILL BE 8 FEET MAX. WHEN STANDARD STRENGTH FABRIC AND WIRE BACKING ARE USED. IF ROCK FILTERS ARE DESIGNED AT LOW POINTS IN THE SEDIMENT FENCE, THE ROCK WILL BE REPAIRED OR REPLACED IF IT BECOMES HALF-FULL OF SEDIMENT, NO LONGER DRAINS AS DESIGNED OR IS DAMAGED.

6. SEDIMENT WILL BE REMOVED FROM SEDIMENT TRAPS WHEN THE DESIGNED STORAGE CAPACITY HAS BEEN HALF FILLED WITH SEDIMENT. THE ROCK WILL BE CLEANED OR REPLACED WHEN THE SEDIMENT POOL NO LONGER DRAINS OR WHEN THE ROCK IS DISLODGED. BAFFLES WILL BE REPAIRED OR REPLACED IF THEY COLLAPSE, TEAR, DECOMPOSE OR BECOME INEFFECTIVE. THEY WILL BE REPLACED PROMPTLY. SEDIMENT WILL BE REMOVED WHEN DEPOSITS REACH HALF THE HEIGHT OF THE 1ST BAFFLE. FLOATING SKIMMERS WILL BE INSPECTED AND KEPT CLEAN WEEKLY.

7. SEDIMENT WILL BE REMOVED FROM THE SEDIMENT BASIN WHEN THE DESIGN STORAGE CAPACITY HAS BEEN HALF FILLED WITH SEDIMENT. ROCK WILL BE CLEANED OR REPLACED WHEN THE SEDIMENT POOL NO LONGER DRAINS OR IF THE ROCK IS DISLODGED. BAFFLES WILL BE REPAIRED OR REPLACED IF THEY COLLAPSE, TEAR, DECOMPOSE OR BECOME INEFFECTIVE. THEY WILL BE REPLACED PROMPTLY. SEDIMENT WILL BE REMOVED FROM BAFFLES WHEN DEPOSITS REACH HALF THE HEIGHT OF THE 1ST BAFFLE. FLOATING SKIMMERS WILL BE INSPECTED WEEKLY AND WILL BE KEPT CLEAN.

8. LAND QUALITY REQUIRES:
ALL SEEDED AREAS WILL BE FERTILIZED, RESEEDED AS NECESSARY, AND MULCHED, ACCORDING TO SPECIFICATIONS IN THE VEGETATIVE PLAN, TO MAINTAIN A VIGOROUS, DENSE VEGETATIVE COVER. ALL SLOPES WILL BE STABILIZED WITHIN 21 CALENDAR DAYS. ALL OTHER AREAS WILL BE STABILIZED WITHIN 15 WORKING DAYS.
WATER QUALITY REQUIRES:
ALL SEEDED AREAS WILL BE FERTILIZED, RESEEDED AS NECESSARY AND MULCHED ACCORDING TO SPECIFICATIONS IN THE VEGETATIVE PLAN TO MAINTAIN A VIGOROUS, DENSE VEGETATIVE COVER. ALL PERIMETER DIKES, SWALES, DITCHES, PERIMETER SLOPES, ALL SLOPES STEEPER THAN 3" HORIZONTAL TO 1" VERTICAL (3:1) AND ALL HIGH QUALITY WATER (HQW) ZONES SHALL BE PROVIDED TEMPORARY OR PERMANENT STABILIZATION WITH GROUND COVER AS SOON AS PRACTICABLE BUT IN ANY EVENT WITHIN SEVEN (7) CALENDAR DAYS FROM THE LAST LAND-DISTURBING ACTIVITY. ALL OTHER DISTURBED AREAS SHALL BE PROVIDED TEMPORARY OR PERMANENT STABILIZATION WITH GROUND COVER AS SOON AS PRACTICABLE BUT IN ANY EVENT WITHIN FOURTEEN (14) CALENDAR DAYS FROM THE LAST LAND-DISTURBING ACTIVITY.

9. FLOCCULANTS WILL BE USED TO ADDRESS TURBIDITY ISSUES. THE PUMPS, TANKS, HOSES AND INJECT SYSTEMS WILL BE CHECKED FOR PROBLEMS OR TURBID DISCHARGES DAILY.

10. BASIN OUTLET STRUCTURES AND SKIMMERS SHALL WITHDRAW WATER FROM THE SURFACE.

TEMPORARY/PERMANENT GRASS SPECIFICATION:

1. CHISEL COMPACTED AREAS AND SPREAD TOPSOIL 3 INCHES DEEP OVER ADVERSE SOIL CONDITIONS.

2. RIP THE ENTIRE AREA TO A 6 INCH DEPTH.

3. REMOVE ALL ROCKS, ROOTS AND OTHER OBSTRUCTIONS LEAVING SURFACES SMOOTH AND UNIFORM.

4. APPLY AGRICULTURAL LIME AND FERTILIZER UNIFORMLY AND MIX WITH SOIL.
LIME: 45 LBS. PER 1000 S.F.
PHOSPHOROUS: 20 LBS PER 1000 S.F.
FERTILIZER: 17 LBS. PER 1000 S.F.

5. CONTINUE TILLAGE UNTIL A WELL PULVERIZED, FIRM, UNIFORM SEED BED IS PREPARED 4-6 INCHES DEEP.

6. SEED ON A FRESHLY PREPARED SEED BED AND COVER SEED LIGHTLY. 2 - 3 LBS PER 1000 S.F. (SEE MIXTURE BELOW)

7. MULCH IMMEDIATELY AFTER SEEDING AND ANCHOR MULCH.
GRAIN STRAW & HAY AT 75 TO 100 LBS PER 1000 S.F.
WOOD CHIPS AT 500 LBS. PER 1000 S.F.
JUTE & MESH AS PER MANUFACTURER

8. ASPHALT FOR ANCHORING MULCH SHALL BE TYPE SS-1 EMULSION AND APPLIED AT A RATE OF 1000 GAL. PER ACRE FOR SLOPE STABILIZATION, AND 150 GAL. PER TON OF STRAW FOR ANCHORING STRAW.
9. INSPECT ALL SEEDED AREAS AND MAKE NECESSARY REPAIRS OR RESEED WITHIN THE PLANTING SEASON, IF POSSIBLE. IF GRASS STAND SHOULD BE OVER 60% DAMAGED, REESTABLISH FOLLOWING ORIGINAL LIME, FERTILIZER AND SEEDING RATES.

10. CONSULT CONSERVATION INSPECTOR ON MAINTENANCE, TREATMENT, AND FERTILIZATION AFTER PERMANENT COVER IS ESTABLISHED.

11. SEED FOR TEMPORARY AND PERMANENT APPLICATIONS SHALL BE:

20%	CARPET GRASS
28%	BERMUDA GRASS
20%	TURF FESCUE
10%	CREEPING RED FESCUE
20%	ANNUAL RYE GRAIN

*BERMUDA SEED SHALL BE HULLED FOR WARM WEATHER PLANTING. PURITY OF SEED SHALL BE A MIN. OF 98% AND GERMINATION SHALL BE A MIN. OF 85%.

ALL DISTURBED AREA SHALL BE SEEDED WITHIN 7-14 DAYS OF THE COMPLETION OF GRADING. SEE EROSION CONTROL AND MAINTENANCE NOTES. CONSULT CONSERVATION ENGINEER OR SOIL CONSERVATION SERVICE FOR ADDITIONAL INFORMATION CONCERNING OTHER ALTERNATIVES FOR VEGETATION OF DENUDED AREAS. THE ABOVE VEGETATION RATES ARE THOSE WHICH DO WELL UNDER LOCAL CONDITIONS, OTHER SEEDING SCHEDULES MAY BE POSSIBLE.

SITE WORK NOTES:

1. THE CONTRACTOR SHALL VISIT THE SITE TO BECOME FAMILIAR WITH FIELD CONSTRUCTION CONDITIONS.

2. CONTRACTOR SHALL COORDINATE WORK WITHIN NCDOT AND LOCAL RIGHT OF WAYS WITH PROPER AUTHORITIES AND SHALL MEET ANY REQUIREMENTS AS TO TRAFFIC CONTROL AND CONNECTION TO EXISTING STREETS.

3. CLEARING AND GRUBBING: REMOVE ALL TREES AS REQUIRED UNLESS OTHERWISE NOTED TO REMAIN, STUMPS, ROOTS, SHRUBBERY, ASPHALT, CONCRETE, STRUCTURES, BURIED UTILITIES, STORAGE TANKS, ETC. WITHIN LIMITS OF CONSTRUCTION.

4. STRIPPING: BEFORE EXCAVATING OR FILLING, REMOVE ALL TOPSOIL, WOOD, LEAVES, AND ANY OTHER UNSUITABLE MATERIAL.

5. MUCKING: REMOVE ANY SOFT, ORGANIC SILT MATERIALS AND EXISTING BURIED CONSTRUCTION DEBRIS AS REQUIRED AND FILL TO SUBGRADE ELEVATIONS WITH A CLEAN SELECT-FILL COMPACTED AS SPECIFIED.
6. DISPOSAL: CLEARED, GRUBBED, STRIPPED OR EXCAVATED SPOIL SHALL BE REMOVED FROM SITE AND DISPOSED OF IN ACCORDANCE WITH ALL APPLICABLE LOCAL AND STATE CODES.

7. BORROW MATERIAL: THE CONTRACTOR SHALL FURNISH BORROW MATERIAL REQUIRED FROM OFF SITE AND OBTAIN ALL REQUIRED PERMITS ASSOCIATED WITH BORROW OPERATIONS.

8. FILL AND COMPACTION: AFTER STRIPPING THOSE AREAS DESIGNATED TO RECEIVE FILL SHOULD BE PROOFROLLED. THE TOP 8" OF SUBGRADE SHALL BE COMPACTED TO AT LEAST 98% OF MAXIMUM DENSITY AT OPTIMUM MOISTURE CONTENT. ANY AREA WHICH PUMPS OR RUTS EXCESSIVELY SHOULD BE UNDERCUT AND REPLACED WITH A CLEAN, SILTY OR CLAYEY SAND HAVING A UNIFIED SOIL CLASSIFICATION OF SP, SM, OR SC. FILL MATERIAL 5" OUTSIDE OF BUILDING AREAS SHALL THEN BE PLACED IN LAYERS NOT TO EXCEED 8" AND COMPACTED TO AT LEAST 95% OF THE STANDARD PROCTOR MAXIMUM DRY DENSITY (ASTM D-698) WITH THE UPPER 12 INCHES OF SUBGRADE BEING COMPACTED TO 98% OF THE STANDARD PROCTOR MAXIMUM DRY DENSITY. FILL MATERIALS WITHIN BUILDING AREAS TO A LINE OUTSIDE THE BUILDING AREAS SHALL BE PLACED IN LAYERS NOT TO EXCEED 8" AND COMPACTED TO AT LEAST 98% OF THE STANDARD PROCTOR MAXIMUM DRY DENSITY (ASTM D-698) WITH THE UPPER 12 INCHES OF SUBGRADE BEING COMPACTED IN 6 INCH LAYERS TO 100% OF THE STANDARD PROCTOR MAXIMUM DRY DENSITY. IN AREAS WHERE NO STRUCTURAL FILL IS TO BE PLACED THE UPPER 12 INCHES OF IN-PLACE SUBGRADE SHOULD BE COMPACTED TO AT LEAST 98% OF THE STANDARD PROCTOR MAXIMUM DRY DENSITY. IF THE MATERIAL IS TOO DRY TO COMPACT TO THE REQUIRED DENSITY EACH LAYER SHALL BE WETTED IN ACCORDANCE WITH COMPACTION REQUIREMENTS. IF THE MATERIAL IS TOO WET TO SECURE PROPER COMPACTION, IT SHALL BE HARROWED REPEATEDLY OR OTHERWISE AERATED WITH SUITABLE EQUIPMENT UNTIL OPTIMUM MOISTURE CONTENT IS OBTAINED. FILL SHALL BE PLACED IN SUCH A MANNER THAT THE SURFACE WILL DRAIN READILY AT ALL TIMES. SEE STRUCTURAL NOTES AND SOILS REPORT FOR ADDITIONAL REQUIREMENTS.
9. LAYOUT: THE CONTRACTOR SHALL PROVIDE ALL LAYOUT REQUIRED TO CONSTRUCT HIS WORK.

10. THE CONTRACTOR IS RESPONSIBLE FOR THE LOCATION AND PROTECTION OF EXISTING UTILITIES DURING CONSTRUCTION.

11. EXISTING BOUNDARY AND TOPOGRAPHIC INFORMATION FROM SURVEY BY BATEMAN CIVIL SURVEY COMPANY AND PROVIDED BY OWNER.

12. THE CONTRACTOR SHALL VERIFY DIMENSIONS AT JOBSITE.

13. THE CONTRACTOR IS RESPONSIBLE FOR THE COORDINATION OF RELOCATION OR DISCONNECTION OF ALL EXISTING UTILITIES WITH APPLICABLE AGENCIES AND AUTHORITIES.

14. ALL PAVEMENT AND BASE MATERIALS AND WORKMANSHIP SHALL CONFORM TO NCDOT STANDARDS.

15. WATER AND SEWER SERVICES SHALL BE INSTALLED TO MEET LOCAL AND STATE PLUMBING CODES. METER AND TAPS SHALL MEET ALL LOCAL REQUIREMENTS.

16. ALL AREAS SHALL BE GRADED FOR POSITIVE DRAINAGE.

17. SEE SOILS REPORT FOR ADDITIONAL REQUIREMENTS.

18. CONTRACTOR SHALL NOTE THAT EARTHWORK QUANTITIES ARE HIS RESPONSIBILITY. PLANS DO NOT REPRESENT A BALANCED EARTHWORK CONDITION.

19. REINF. CONC. PIPE SHALL BE CLASS III W/RUBBER GASKETED JOINT OR "RAM NECK". INSTALL PER MANUFACTURER'S REQUIREMENTS.

DEVELOPER
DPJ RESIDENTIAL ACQUISITIONS, LLC
PORTER JONES, PRINCIPAL
1539 TIPPAH PARK COURT
CHARLOTTE, NC 28205
980-226-5381 (OFFICE)
404-735-2134 (CELL)

For each open utility cut of City streets, a $325 permit shall be required from the City prior to occupancy and/or project acceptance.

CITY OF WILMINGTON NORTH CAROLINA
Public Services • Engineering Division
STORMWATER MANAGEMENT PLAN
Date:_____ Permit #_____
Signed: _____

Approved Construction Plan

	Name	Date
Planning		
Traffic		
Fire		

NCDENR PWSS WATER PERMIT #: _____
WATER CAPACITY: _____GPD
DWQ SEWER PERMIT #: _____
SEWER CAPACITY: _____GPD
SEWER SHED # AND PLANT: _____
SEWER TO FLOW THROUGH NEI: YES or NO (CIRCLE ONE)

©2015 NORRIS & TUNSTALL

© 2015 CLINE DESIGN ASSOCIATES, PA EXPRESSLY RESERVES ITS COMMON LAW COPYRIGHT AND OTHER PROPERTY RIGHTS IN THESE PLANS. THESE PLANS ARE NOT TO BE REPRODUCED, CHANGED OR COPIED IN ANY FORM OR MANNER WHATSOEVER, NOR ARE THEY TO BE ASSIGNED TO ANY THIRD PARTY WITHOUT FIRST OBTAINING THE EXPRESSED WRITTEN PERMISSION AND CONSENT OF CLINE DESIGN ASSOCIATES, PA.

CLINE DESIGN
125 N. Harrington St.
Raleigh, NC 27603
919/833-6413
919/836-1280 FAX
ClineDesignAssoc.com
Attn: Chris Tingler

NORRIS & TUNSTALL
CONSULTING ENGINEERS, P.C.
902 MARKET STREET
WILMINGTON, NC 28401
PHONE (910) 343-9653
FAX (910) 343-9604
LICENCE #C-3641

DPJ Residential
The Flats at Main
1829 Sir Tyler Drive
Wilmington, North Carolina

TRC SET

NORTH CAROLINA PROFESSIONAL SEAL 19851 ENGINEER JOHN S. TUNSTALL

PROJECT: 015117	
DATE: 09.15.16	
REVISIONS:	DATE
DRAWN BY: NKS	
CHECKED BY: JST	

CG5.0
NT #15104

GRADING, STORM DRAINAGE, AND EROSION CONTROL NOTES AND DETAILS

F:\Projects\2016\16045 The Pines\16045 Plans\dwg\16045.master.r3.dwg, 9/15/2016 11:55:13 AM

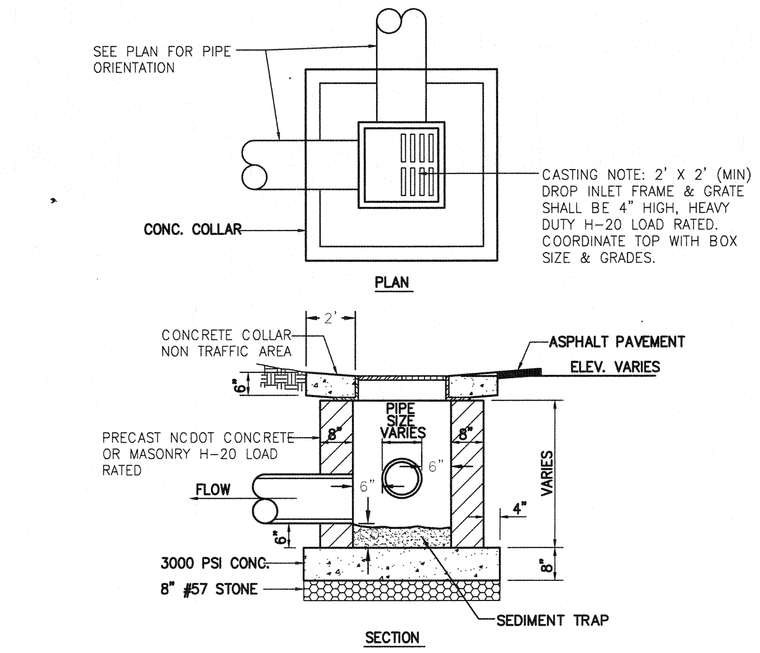

NOT TO SCALE

1 DROP INLET DETAIL

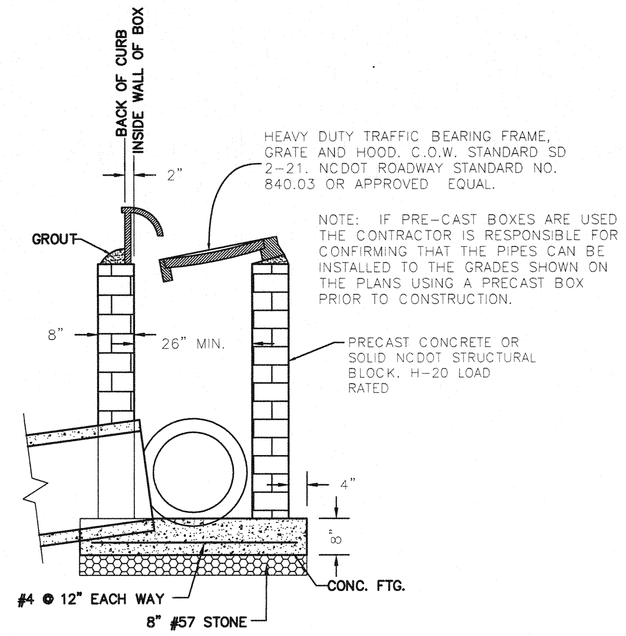

NOT TO SCALE

2 CATCH BASIN DETAIL

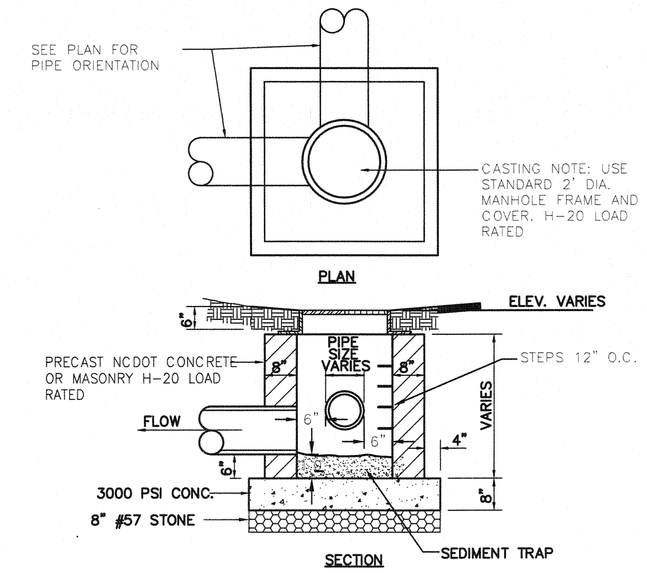

NOT TO SCALE

3 JUNCTION BOX DETAIL

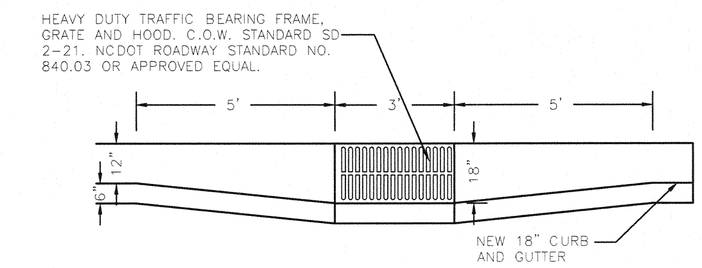

NOT TO SCALE

4 18" CURB AND GUTTER INLET OFFSET DETAIL

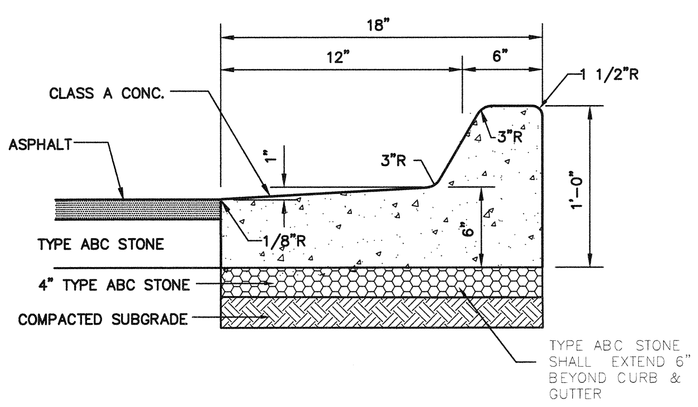

NOTE: CURB TYPE DEPENDS ON GRADES SHOWN ON GRADING PLAN. GRADES INDICATING FALL AWAY FROM CURB SHALL BE SPILL OFF TYPE CURB. GRADES INDICATING CURB ACCEPTING FLOW SHALL BE FLOW LINE TYPE.

NOT TO SCALE

5 18" CURB AND GUTTER SECTION (SPILL-OFF)

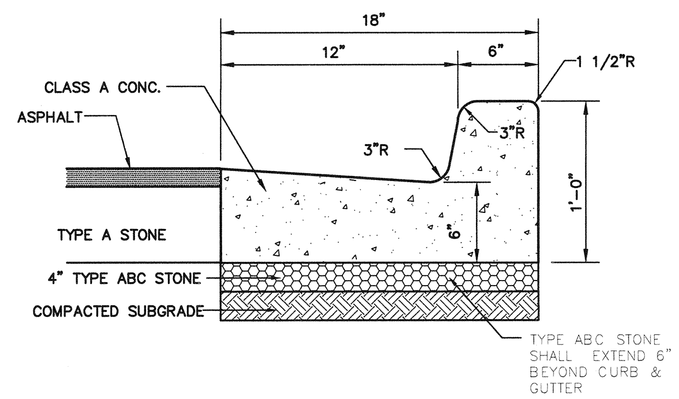

NOTE: CURB TYPE DEPENDS ON GRADES SHOWN ON GRADING PLAN. GRADES INDICATING FALL AWAY FROM CURB SHALL BE SPILL OFF TYPE CURB. GRADES INDICATING CURB ACCEPTING FLOW SHALL BE FLOW LINE TYPE.

NOT TO SCALE

6 18" CURB AND GUTTER SECTION (FLOW-LINE)

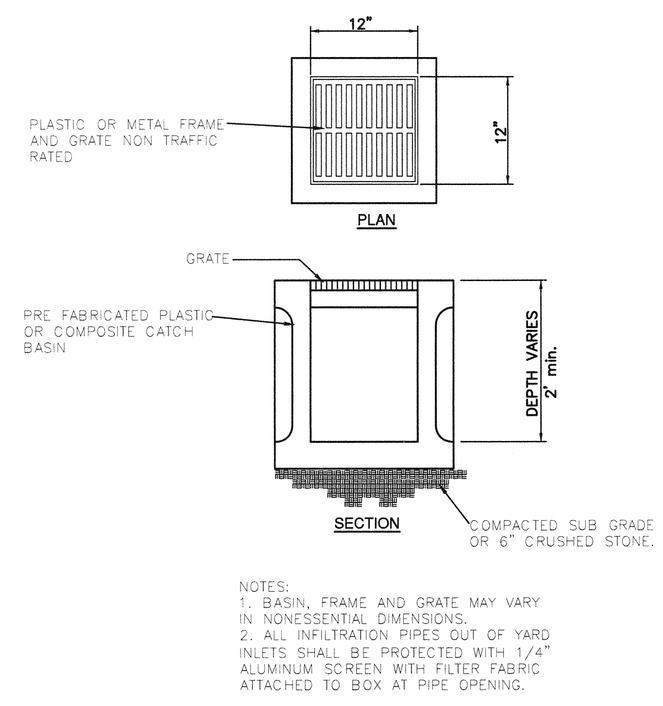

NOTES:
1. BASIN, FRAME AND GRATE MAY VARY IN NONESSENTIAL DIMENSIONS.
2. ALL INFILTRATION PIPES OUT OF YARD INLETS SHALL BE PROTECTED WITH 1/4" ALUMINUM SCREEN WITH FILTER FABRIC ATTACHED TO BOX AT PIPE OPENING.

7 YARD INLET

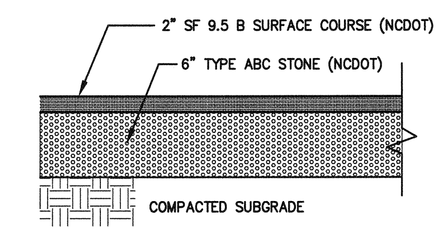

NOTE: PAVEMENT SECTION MAY VARY DEPENDING UPON FIELD CONDITIONS. CONTRACTOR SHALL COORDINATE w/OWNER & GEOTECHNICAL ENGINEER TO DETERMINE ACTUAL PAVEMENT SECTION.

NOT TO SCALE

8 ASPHALT PAVEMENT SECTION

PERMEABLE PAVEMENT CONSTRUCTION SEQUENCE:

The following is a typical construction sequence to properly install pervious concrete. The means and methods of installation shall be determined by the contractor and shall be installed per the manufacturer recommendations, product standards and industry guidelines.

Step 1. Construction of the permeable pavement shall only begin after the entire contributing drainage area has been stabilized. The proposed site should be checked for existing utilities prior to any excavation. Do not install the system in rain or snow.

Step 2. Temporary erosion and sediment (E&S) controls (silt fence) are needed during installation to divert stormwater away from the permeable pavement area until it is completed. The proposed permeable pavement area must be kept free from sediment during the entire construction process. Construction materials that are contaminated by sediments must be removed and replaced with clean materials.

Step 3. Where possible, excavators or backhoes should work from the sides to excavate the aggregate layer to its appropriate design depth and dimensions.

Step 4. In-situ soil testing shall be done after excavation to verify existing infiltration rate. Soils testing shall be conducted by an appropriately qualified professional, the testing can be done by the contractor, the designer, or a third party hired by owner. The results of the testing shall be given to the designer of record for review. If results show a lower infiltration rate than the rate of design the depth of aggregate must be revised.

Step 5. The native soils along the bottom and sides of the permeable pavement system should be scarified or tilled to a depth of 3 to 4 inches prior to the placement of the filter layer or filter fabric.

Step 6. Filter fabric should be installed on the bottom and the sides of the aggregate layer.

Step 7. Place observation wells as shown on plans.

Step 8. Inspect all aggregate prior to placement. Ensure aggregate is clean, free of fines and conform to the plans and specifications. All aggregate shall be spread (not dumped). Moisten and spread the washed stone without driving on the soil subgrade, being careful not to damage the observation wells. Follow compaction recommendations by the permeable pavement manufacturer or that from industry guidelines.

Step 9. Ensure edge restraints and barriers between permeable pavement are installed per design.

Step 10. Contractor is to follow standard installation procedures for the specific type of pervious pavement that is being installed. For this project pervious concrete will be installed. Only certified and experienced contractors shall install the pervious concrete and installation shall be per the manufacturer recommendations, product standards and industry guidelines. Pervious concrete shall be constructed in accordance with the latest version of ACI 522.1, Specifications for Pervious Concrete.

Step 11. After installation, protect the installed pervious concrete until project completion, including routing construction traffic away from the installed pervious concrete. Contractor shall provide protection techniques including mats, plastic sheeting and barriers to ensure the pervious concrete remains protected until project completion.

12 PERMEABLE PAVEMENT NOTES

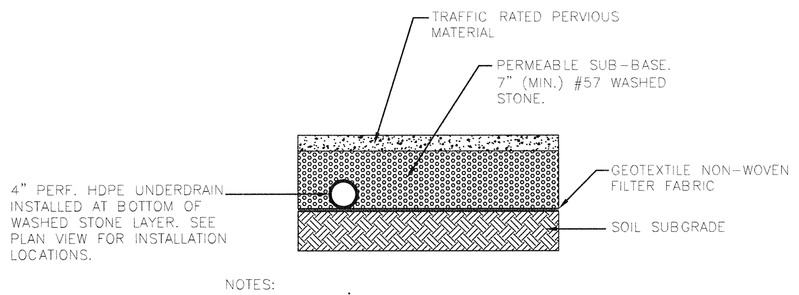

NOTES:

1. TRAFFIC RATED PERVIOUS MATERIALS SHALL BE INSTALLED PER MANUFACTURERS RECOMMENDATIONS.

9 PERVIOUS PAVEMENT SECTION

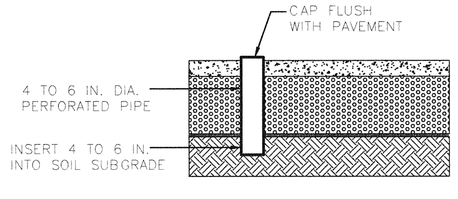

PERVIOUS PAVEMENT OBSERVATION WELL NOTES:

1. IF THE SUBGRADE IS NOT TERRACED, THEN THE OBSERVATION WELL SHALL BE PLACED AT THE LOW END OF THE SUBGRADE SLOPE. IF THE SUBGRADE IS TERRACED, THEN ONE OBSERVATION WELL SHALL BE BUILT INTO THE LOW END OF EACH TERRACE.
2. OBSERVATION WELLS SHALL BE FITTED WITH A LOCKABLE CAP INSTALLED PLACED EVEN WITH THE PAVEMENT SURFACE TO FACILITATE QUARTERLY INSPECTION AND MAINTENANCE.
3. THE OBSERVATION WELL SHALL CONSIST OF A RIGID 4 TO 6 IN. DIAMETER PERFORATED PVC PIPE.

10 PERVIOUS PAVEMENT OBSERVATION WELL DETAIL

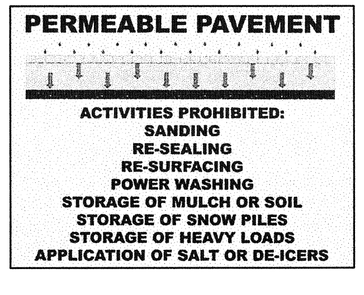

NOTES:
1. THE PERMEABLE PAVEMENT SIGN IS BASED ON AN 18" X 24" STANDARD SIZE FOR SIGN PRODUCTION.
2. A HIGH-RESOLUTION IMAGE FILE CAN BE PROVIDED BY THE DWQ FOR USE IN FABRICATING THE SIGN. THE GRAFFIC IS IN COLOR BUT COLOR SIGNS ARE NOT REQUIRED.

11 PERMEABLE PAVEMENT SIGNAGE DETAIL

DEVELOPER
DPJ RESIDENTIAL ACQUISITIONS, LLC
PORTER JONES, PRINCIPAL
1539 TIPPAH PARK COURT
CHARLOTTE, NC 28205
980-226-5381 (OFFICE)
404-735-2134 (CELL)

For each open utility cut of City streets, a $325 permit shall be required from the City prior to occupancy and/or project acceptance.

CITY OF WILMINGTON NORTH CAROLINA
Public Services • Engineering Division
STORMWATER MANAGEMENT PLAN
Date:_____ Permit #:_____
Signed: _____

Approved Construction Plan
Name Date
Planning_____
Traffic_____
Fire_____

NCDENR PWSS WATER PERMIT #: _____
WATER CAPACITY: _____GPD
DWQ SEWER PERMIT #: _____
SEWER CAPACITY: _____GPD
SEWER SHED # AND PLANT: _____
SEWER TO FLOW THROUGH NE: YES or NO (CIRCLE ONE)

©2015 NORRIS & TUNSTALL

© 2015 CLINE DESIGN ASSOCIATES, PA EXPRESSLY RESERVES ITS COMMON LAW COPYRIGHT AND OTHER PROPERTY RIGHTS IN THESE PLANS. THESE PLANS ARE NOT TO BE REPRODUCED, CHANGED OR COPIED IN ANY FORM OR MANNER WHATSOEVER, NOR ARE THEY TO BE ASSIGNED TO ANY THIRD PARTY WITHOUT FIRST OBTAINING THE EXPRESSED WRITTEN PERMISSION AND CONSENT OF CLINE DESIGN ASSOCIATES, PA.

CLINE DESIGN
125 N. Harrington St.
Raleigh, NC 27603
919/833-6413
919/836-1280 FAX
ClineDesignAssoc.com
Attn: Chris Tingler

NORRIS & TUNSTALL
CONSULTING ENGINEERS, P.C.
902 MARKET STREET
WILMINGTON, NC 28401
PHONE (910) 343-9653
FAX (910) 343-9604
LICENCE #C-3641

DPJ Residential
The Flats at Main
1829 Sir Tyler Drive
Wilmington, North Carolina

TRC SET

NORTH CAROLINA PROFESSIONAL SEAL 19851 ENGINEER JOHN S. TUNSTALL

PROJECT: 015117
DATE: 09.15.16
REVISIONS: DATE

DRAWN BY: NKS
CHECKED BY: JST

CG5.1
NT #15104

GRADING, STORM DRAINAGE, AND EROSION CONTROL NOTES AND DETAILS

F:\Projects\2016\16045 The Pines\16045 Plans\dwg\16045.master.r3.dwg, 9/15/2016 11:55:28 AM

LOCATION MAP NTS

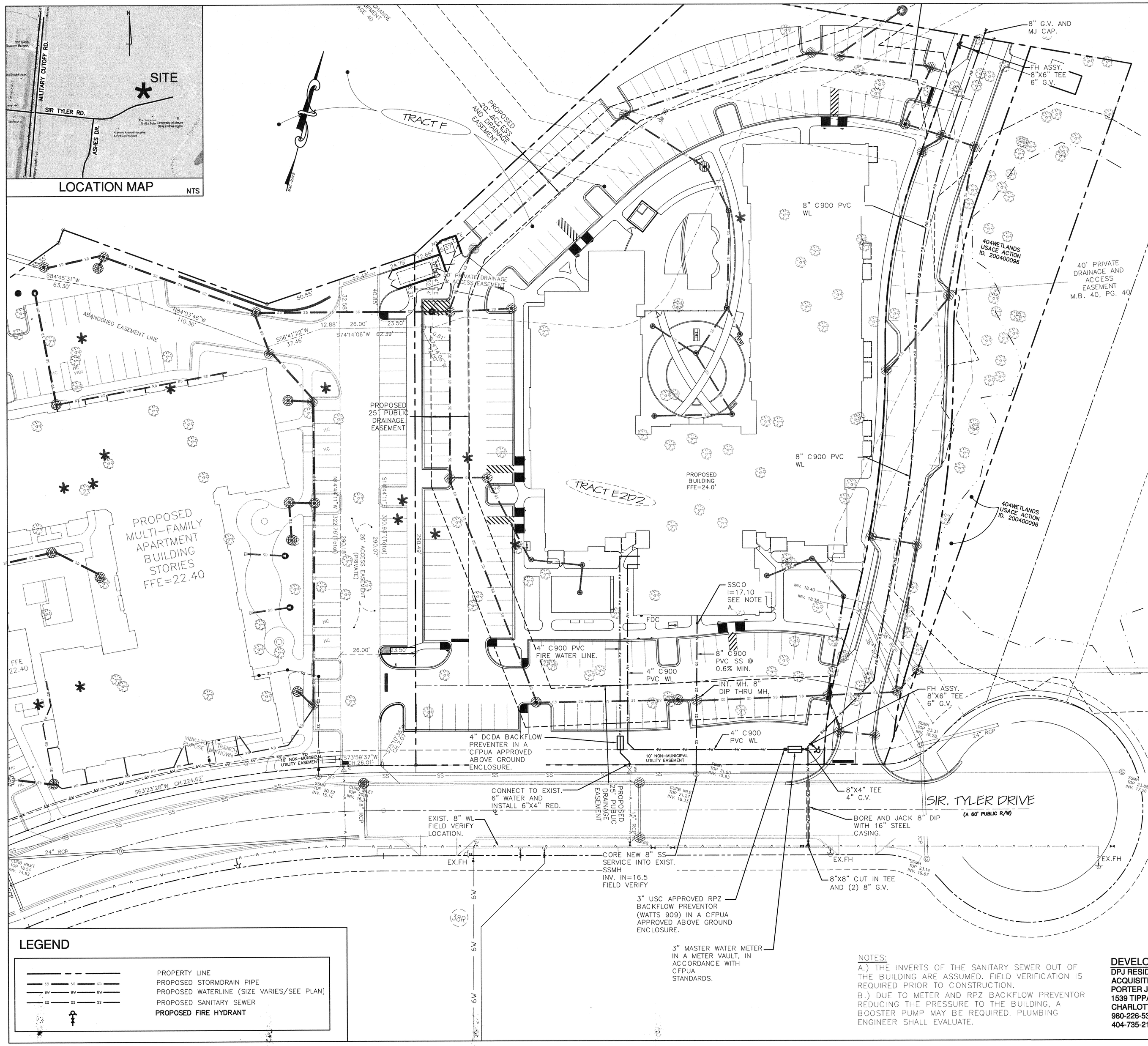

UTILITY NOTES FOR FIRE HYDRANTS:

1. FIRE HYDRANTS MUST BE WITHIN 150' OF THE FIRE DEPARTMENT CONNECTION.
2. THE FIRE DEPARTMENT CONNECTION MUST BE WITHIN 40' OF FIRE APPARATUS PLACEMENT.
3. LANDSCAPING AND PARKING CANNOT BLOCK OR IMPEDE THE FIRE DEPARTMENT CONNECTIONS OR FIRE HYDRANTS. A 3' CLEAR SPACE SHALL BE MAINTAINED AROUND THE CIRCUMFERENCE OF THE FIRE HYDRANT CONNECTION AND THE FIRE HYDRANT.
4. FIRE HYDRANTS MUST BE LOCATED WITHIN 8' OF THE CURB.
5. NEW HYDRANTS MUST BE AVAILABLE FOR USE PRIOR TO CONSTRUCTION OF THE BUILDINGS.
6. NEW HYDRANTS MUST BE BROUGHT INTO SERVICE PRIOR TO COMBUSTIBLE MATERIALS BEING DELIVERED TO THE JOB SITE.
7. THE CONTRACTOR SHALL MAINTAIN AN ALL WEATHER ACCESS FOR EMERGENCY VEHICLES AT ALL TIMES DURING CONSTRUCTION.
8. TEMPORARY STREET SIGNS SHALL BE INSTALLED AT EACH STREET INTERSECTION WHEN CONSTRUCTION OF NEW ROADWAYS ALLOWS PASSAGE BY VEHICLES.
9. UNDERGROUND FIRE LINE AND PRIVATE WATER MAINS MUST BE PERMITTED AND INSPECTED BY THE WILMINGTON FIRE DEPARTMENT FROM THE PUBLIC RIGHT-OF-WAY TO THE BUILDING. CONTACT THE WILMINGTON FIRE DEPARTMENT DIVISION OF FIRE AND LIFE SAFETY AT 910-343-0696 FOR ADDITIONAL INFORMATION.
10. A MINIMUM OF 5' SHALL SEPARATE UNDERGROUND FIRE LINES OR PRIVATE WATER MAINS FROM OTHER UNDERGROUND UTILITIES.
11. HYDRANTS SHALL BE OF SUFFICIENT NUMBERS TO ACCOMODATE BASE FIRE FLOW REQUIREMENTS OF THE STRUCTURE.
12. BUILDING CONSTRUCTION TYPE V-A

WATER AND SEWER USAGE:

RESIDENTIAL:
49 (1) BR UNITS
70 (2) BR UNITS
119 UNITS TOTAL @ 240 GPD/UNIT= 28,560 GPD

COMMERCIAL:
1,522 SF (WITHOUT FULL COMMERCIAL KITCHEN) @ 50 GPD/100 SF= 761 GPD

TOTAL USAGE FOR SITE= 29,321 GPD

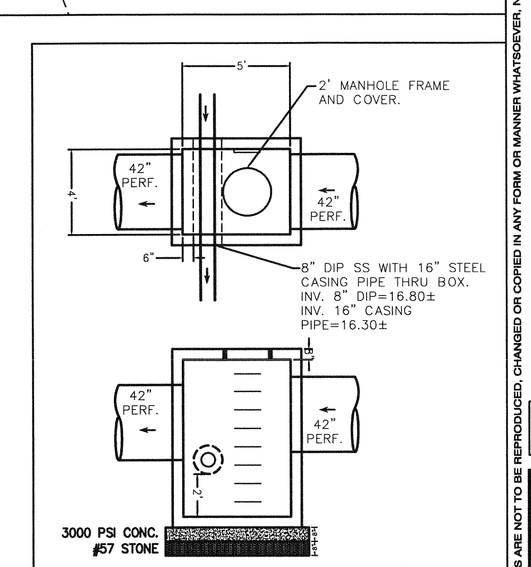

INTERFERENCE DROP INLET BOX
SCALE: 1"=5'

INT. DROP INLET
4' X 5' PRECAST BOX
TOP ELEV.=GRADE (22.30±)
INV. IN 42" RCP=17.47±
INV. OUT 42" RCP=17.10±
INV. THRU BOX 8" DIP SS=16.80±

NOTE: MUST BE GROUTED AND INSTALLED PER CFPUA BORE DETAIL.

LEGEND

- PROPERTY LINE
- PROPOSED STORMDRAIN PIPE
- PROPOSED WATERLINE (SIZE VARIES/SEE PLAN)
- PROPOSED SANITARY SEWER
- **PROPOSED FIRE HYDRANT**

NOTES:
A.) THE INVERTS OF THE SANITARY SEWER OUT OF THE BUILDING ARE ASSUMED. FIELD VERIFICATION IS REQUIRED PRIOR TO CONSTRUCTION.
B.) DUE TO METER AND RPZ BACKFLOW PREVENTOR REDUCING THE PRESSURE TO THE BUILDING, A BOOSTER PUMP MAY BE REQUIRED. PLUMBING ENGINEER SHALL EVALUATE.

DEVELOPER
DPJ RESIDENTIAL ACQUISITIONS, LLC
PORTER JONES, PRINCIPAL
1539 TIPPAH PARK COURT
CHARLOTTE, NC 28205
980-226-5381 (OFFICE)
404-735-2134 (CELL)

For each open utility cut of City streets, a $325 permit shall be required from the City prior to occupancy and/or project acceptance.

CITY OF WILMINGTON NORTH CAROLINA
Public Services • Engineering Division
STORMWATER MANAGEMENT PLAN
Date:_____ Permit #:_____
Signed: _____

Approved Construction Plan
Name Date
Planning_____
Traffic_____
Fire_____

NCDENR PWSS WATER PERMIT #: _____
WATER CAPACITY: _____GPD
DWQ SEWER PERMIT #: _____
SEWER CAPACITY: _____GPD
SEWER SHED # AND PLANT: _____
SEWER TO FLOW THROUGH NEI: YES or NO (CIRCLE ONE)

SCALE: 1" = 30'
0 30 60 90

©2015 NORRIS & TUNSTALL

CLINE DESIGN
125 N. Harrington St.
Raleigh, NC 27603
919/833-6413
919/836-1280 FAX
ClineDesignAssoc.com
Attn: Chris Tingler

NORRIS & TUNSTAL
CONSULTING ENGINEERS, P.C.
902 MARKET STREET
WILMINGTON, NC 28401
PHONE (910) 343-9653
FAX (910) 343-9604
LICENCE #C-3641

© 2016 CLINE DESIGN ASSOCIATES, PA EXPRESSLY RESERVES ITS COMMON LAW COPYRIGHT AND OTHER PROPERTY RIGHTS IN THESE PLANS. THESE PLANS ARE NOT TO BE REPRODUCED, CHANGED OR COPIED IN ANY FORM OR MANNER WHATSOEVER, NOR ARE THEY TO BE ASSIGNED TO ANY THIRD PARTY WITHOUT FIRST OBTAINING THE EXPRESSED WRITTEN PERMISSION AND CONSENT OF CLINE DESIGN ASSOCIATES, PA.

DPJ Residential
The Flats at Main
1829 Sir Tyler Drive
Wilmington, North Carolina

TRC SET

NORTH CAROLINA PROFESSIONAL SEAL 19851 ENGINEER JOHN S. TUNSTALL

PROJECT: 015117	
DATE: 09.15.16	
REVISIONS:	DATE
DRAWN BY: NKS	
CHECKED BY: JST	

CU4.0
NT #15104

UTILITY PLAN

F:\Projects\2016\16045 The Pines\16045 Plans\dwg\16045.master.r3.dwg, 9/15/2016 11:48:30 AM