CONSTRUCTION PLANS FOR FIAT DISPLAY LOT 6421 MARKET STREET

NOTES

1. PRIOR TO ANY CLEARING, GRADING OR CONSTRUCTION ACTIVITY, TREE PROTECTION FENCING (IF REQUIRED) WILL BE INSTALLED AROUND PROTECTED TREES OR GROVES OF TREES AND NO CONSTRUCTION WORKERS, TOOLS, MATERIALS, OR VEHICLES ARE PERMITTED WITHIN THE TREE PROTECTION.

2. ANY TREES AND/OR AREAS DESIGNATED TO BE PROTECTED MUST BE PROPERLY BARRICADED WITH FENCING AND PROTECTED THROUGHOUT CONSTRUCTION TO INSURE THAT NO CLEARING, GRADING OR STAGING OF MATERIALS OCCUR IN THOSE AREAS.

3. NO EQUIPMENT IS ALLOWED ON SITE UNTIL ALL TREE PROTECTION FENCING AND SILT FENCING IS INSTALLED AND APPROVED. PROTECTIVE FENCING IS TO BE MAINTAINED THROUGHOUT THE DURATION OF THE PROJECT, AND CONTRACTORS SHALL RECEIVE ADEQUATE INSTRUCTION ON TREE PROTECTION METHODS.

4. ALL PAVEMENT MARKINGS IN PUBLIC RIGHTS OF WAY AND FOR DRIVEWAY ARE TO BE THERMO PLASTIC AND MEET CITY AND/OR NCDOT STANDARDS.

5. ONCE STREETS ARE OPEN TO TRAFFIC, CONTACT TRAFFIC ENGINEERING REGARDING THE INSTALLATION OF TRAFFIC AND STREET NAME SIGNS. PROPOSED STREET NAMES MUST BE APPROVED PRIOR TO INSTALLATION OF STREET SIGN NAMES.

6. TRAFFIC CONTROL DEVICES (INCLUDING SIGNS AND PAVEMENT MARKINGS) IN AREAS OPEN TO PUBLIC TRAFFIC ARE TO MEET MUTCD STANDARDS AND BE MAINTAINED BY THE OWNER.

7. CONTACT TRAFFIC ENGINEERING AT 910-341-7888 TO ENSURE THAT ALL TRAFFIC SIGNAL FACILITIES AND EQUIPMENT ARE SHOWN ON THE PLAN.

8. TRAFFIC ENGINEERING TO BE NOTIFIED AT 341-7888 FORTY-EIGHT HOURS PRIOR TO ANY EXCAVATION IN THE RIGHT OF WAY.

9. TRAFFIC ENGINEERING MUST APPROVE OF PAVEMENT MARKING PRIOR TO ACTUAL STRIPING.

10. ALL PARKING STALL MARKINGS AND LANE ARROWS WITHIN PARKING AREAS SHALL BE WHITE. ALL PAVEMENT MARKINGS IN PUBLIC RIGHTS OF WAY FOR DRIVEWAY ARE TO BE THERMO PLASTIC AND MEET CITY AND/OR NCDOT STANDARDS.

11. ALL TRAFFIC CONTROL SIGNS AND MARKINGS OFF THE RIGHT OF WAY ARE TO BE MAINTAINED BY THE PROPERTY OWNER.

12. STOP SIGNS AND STREET SIGNS TO REMAIN IN PLACE DURING CONSTRUCTION.

13. TACTILE WARNING MATS WILL BE INSTALLED ON ALL WHEEL CHAIR RAMPS.

14. A UTILITY CUT PERMIT IS REQUIRED FOR EACH OPEN CUT OF A CITY STREET.

15. ANY BROKEN OR MISSING SIDEWALK PANELS, DRIVEWAY PANELS AND CURBING WILL BE REPLACED.

16. CONTACT TRAFFIC ENGINEERING AT 341-7888 TO DISCUSS STREET LIGHTING OPTIONS.

17. WATER AND SEWER SERVICE SHALL MEET CAPE FEAR PUBLIC UTILITY AUTHORITY DETAILS AND SPECIFICATIONS.

18. PROJECT SHALL COMPLY WITH CFPUA CROSS CONNECTION CONTROL REQUIREMENTS. WATER METERS CANNOT BE RELEASED UNTIL ALL REQUIREMENTS ARE MET AND THE STATE HAS GIVEN THEIR FINAL APPROVAL.

19. IF THE CONTRACTOR DESIRES CFPUA WATER FOR CONSTRUCTION HE SHALL APPLY IN ADVANCE FOR THIS SERVICE AND MUST SUPPLY A RPZ BACKFLOW PREVENTION DEVICE ON THE DEVELOPERS SIDE OF THE WATER METER BOX.

20. ANY IRRIGATION SYSTEM SUPPLIED BY CFPUA SHALL COMPLY WITH THE CFPUA CROSS CONNECTION REGULATIONS.

21. ANY IRRIGATION SYSTEM SHALL BE EQUIPPED WITH A RAIN AND FREEZE SENSOR.

22. ANY BACKFLOW PREVENTION DEVICES REQUIRED BY THE CFPUA WILL NEED TO BE ON THE LIST OF APPROVED DEVICES BY USCFCCCHR.

23. CONTRACTOR TO FILED VERIFY EXISTING WATER AND SEWER LOCATIONS, SIZES AND MATERIALS PRIOR TO CONSTRUCTION. ENGINEER TO BE NOTIFIED OF CONFLICTS.

24. AN ALL WEATHER DRIVING SURFACE FOR EMERGENCY VEHICLES MUST BE MAINTAINED DURING CONSTRUCTION.

25. UNDERGROUND FIRE LINE(S) MUST BE PERMITTED AND INSPECTED BY THE WILMINGTON FIRE DEPARTMENT FROM THE PUBLIC ROW TO THE BUILDING. CONTACT THE WILMINGTON FIRE DEPARTMENTDIVISON OF FIRE AND LIFE SAFETY AT 910-341-0696.

26. NO OBSTRUCTIONS ARE PERMITTED IN THE SPACE BETWEEN THIRTY (30) INCHES AND TEN (TEN) FEET ABOVE THE GROUND WITHIN THE TRIANGLE SIGHT DISTANCE.

27. CONTRACTOR IS TO NOTIFY (AT A MINIMUM) THE FOLLOWING COMPANIES FOR LOCATION SERVICES:
ULOCO .....1-800-632-4949, 48 HOURS IN ADVANCE
BELL SOUTH.....1-800-392-8712 (STEVE DAYVAULT)
CAROLINA ONE CALL CENTER 1-800-632-4949

28. THERE SHALL BE NO ENCUMBRANCES WITHIN THE NCDOT RIGHT OF WAY.

29. A LANDSCAPING PLAN INDICATING THE LOCATION OF REQUIRED STREET TREES SHALL BE SUBMITTED TO THE CITY OF WILMINGTON TRAFFIC ENGINEERING DIVISION AND PARKS AND RECREATION DEPARTMENT FOR REVIEW AND APPROVAL PRIOR TO THE RECORDING OF THE FINAL PLAT (SD 15-14 CofW TECH STDS)

30. FIRE HYDRANTS CANNOT BE FURTHER THAN 8' FROM THE CURB.

31. PARKING AND LANDSCAPING CANNOT BLOCK FIRE HYDRANTS OF FDC'S

32. FDC'S CAN BE NO FURTHER THAN 40' FROM FIRE DEPARTMENT VEHICLE PLACEMENT

33. FDC'S CAN BE NO FURTHER THAN 150' FROM A FIRE HYDRANT

34. BICYCLE PARKING IS PROVIDED ON THE SOUTHWEST CORNER OF PROPOSED BUILDING

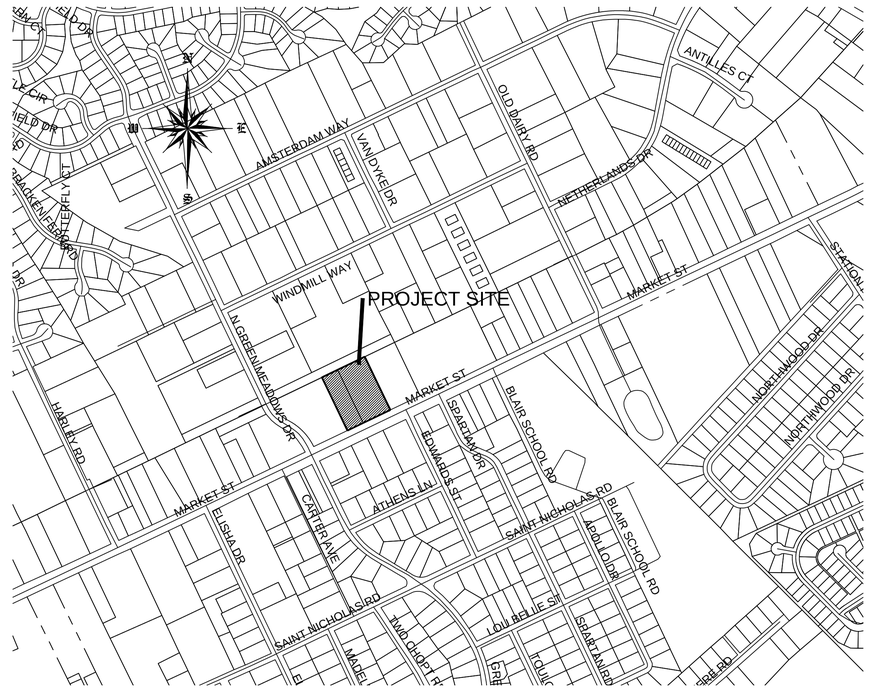

VICINITY MAP
OCTOBER, 2016

LIST OF DRAWINGS

XX	COVER SHEET
C1	EXISTING SITE
C2	SITE PLAN
C3	GRADING
C4	OMITTED
C5	INFILTRATION SYSTEM
C6	DETAILS
L1	LANDSCAPE PLAN
L1	LIGHTING PLAN

CITY OF WILMINGTON NORTH CAROLINA
Public Services • Engineering Division
APPROVED STORMWATER MANAGEMENT PLAN
Date:_____ Permit #_____
Signed: _____

Approved Construction Plan

	Name	Date
Planning		
Traffic		
Fire		
CFPUA		

OWNER/DEVELOPER
GILLILAN PROPERTIES, LLC
MR. JOHN GILLILAN
219 COLLEGE ROAD
WILMINGTON, NC 28406
1-910-799-1815

CIVIL ENGINEER
JBS CONSULTING, PA
BRAD SEDGWICK, PE
7332 COTESWORTH DRIVE
WILMINGTON, NC 28405
1-910-619-9990

SURVEYOR
GEOINNOVATION, PC
MR. DEAN EXLINE, PLS
311 JUDGES ROAD
SUITE 3D
WILMINGTON, NC 28405
1-910-367-2110

BEFORE YOU DIG
STOP
CALL 1 800 632-4949
N.C. ONE-CALL CENTER
IT'S THE LAW

NORTH CAROLINA PROFESSIONAL ENGINEER SEAL 022372 BRADFORD SEDGWICK

NUMBER	DATE	REVISION
R2	10-17-16	ADDRESSED 8-11-16 TRC COMMENTS
R1	7-26-16	RESUBMITTED TO TRC WITHOUT BUILDING

10/17/2016 3:14:12 PM

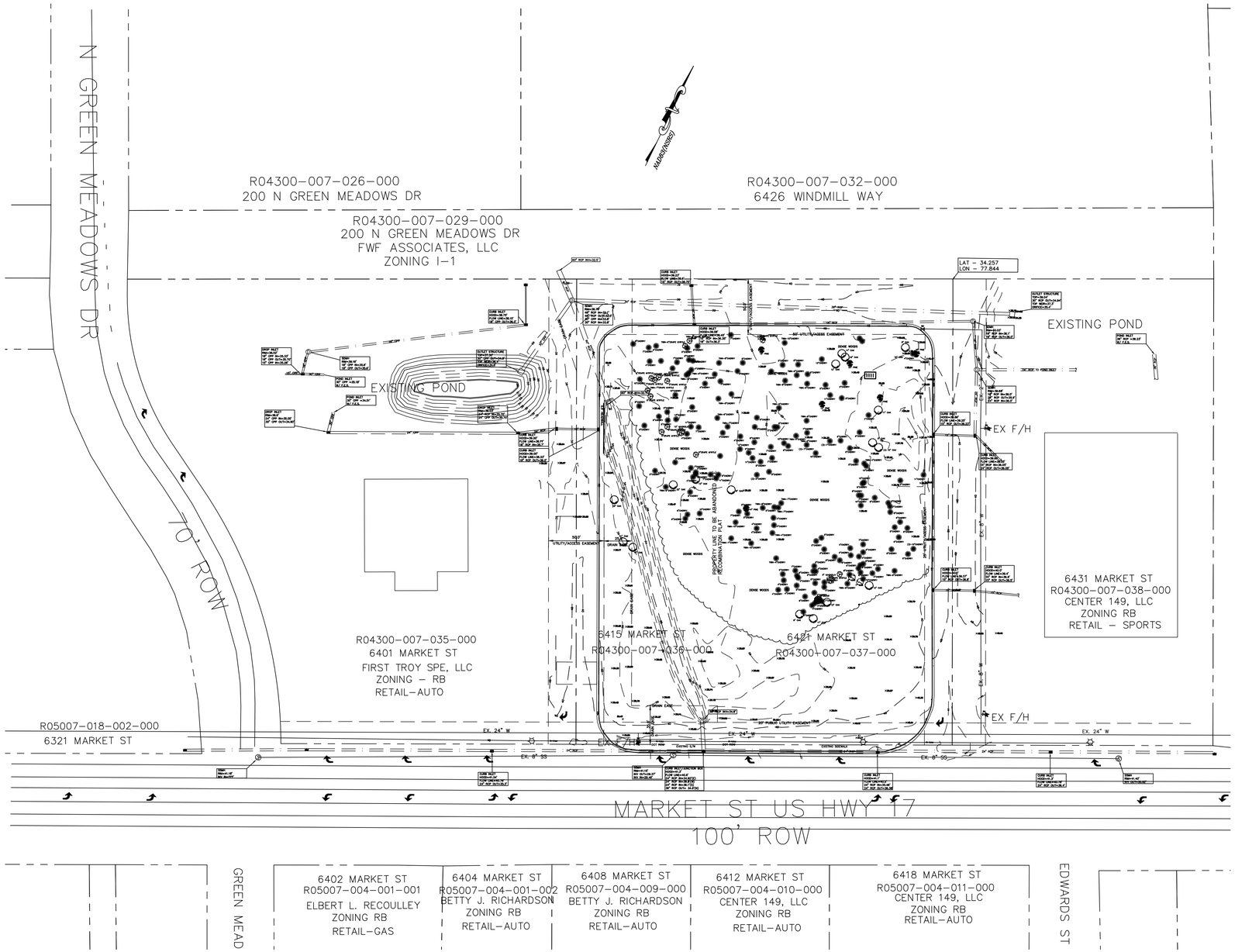

EXISTING SITE
SCALE 1" = 50'

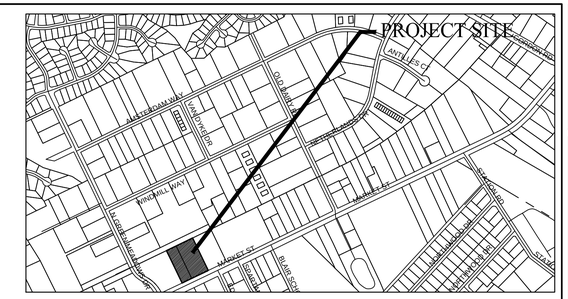

VICINITY MAP
NTS

Detailed Land Use Data
For 7.2 Gross Floor Area '1000 SF of SALESAUTO.1
(841) Automobile Sales

Project: Flat parking lot
Phase: Phase 1
Description:

Open Date: 10/13/2016
Analysis Date: 10/13/2016

Day / Period	Total Trips	Pass-By Trips	Avg. Rate	Min. Rate	Max. Rate	Std. Dev.	Avg. Size	% Enter	% Exit	Use Eq.	Equation	R2
Weekday Average Daily Trips	233	0	32.3	15.64	29.66	15.7	38	50	50	False		
Weekday AM Peak Hour of Generator	14	0	2.22	0.69	8	1.76	31	55	45	True	T = 2.33(X) - 2.41	0.69
Weekday PM Peak Hour of Generator	20	0	2.6	0.88	5.41	1.91	31	47	53	True	T = 2.81(X) - 0.10	0.75

Weekday ADT – 233 trips

AM Peak trips
Enter – 8
Exit – 6
Total – 14

PM Peak trips
Enter – 9
Exit – 11
Total – 20

Source: Institute of Transportation Engineers, Trip Generation Manual 9th Edition, 2012
TRIP GENERATION 2013, TRAFFICWARE, LLC

1

BEFORE YOU DIG
STOP
CALL 1 800 632-4949
N.C. ONE-CALL CENTER
IT'S THE LAW

LEGEND

EXIST. SPOT ELEVATION	×123.45 (123.45)
PRO. SPOT ELEVATION	20.0
SILT FENCE	
DRAINAGE RUNOFF FLOW	
LIMITS OF CONSTRUCTION	
ASPHALT	
CONC. PAVEMENT	
GRAVEL	
EDGE OF WOODS	EOWDS
TOP OF BANK	TOB
EDGE OF WATER	EOW
EDGE OF GRAVEL	EOG

CITY OF WILMINGTON NORTH CAROLINA
Public Services • Engineering Division
APPROVED STORMWATER MANAGEMENT PLAN
Date:_____ Permit #_____
Signed: _____

Approved Construction Plan

	Name	Date
Planning		
Traffic		
Fire		
CFPUA		

50' 0 50' 100'
SCALE: 1"=50' (Horiz.)

NO WETLAND WITHIN PROJECT AREA

NUMBER	DATE	REVISION
R1	7-26-16	RESUBMITTED TO TRC WITHOUT BUILDING

10/17/2016 3:14:15 PM

DESIGN BY: BDS
DRAWN BY: BDS
CHECKED BY: BDS
DATE OCTOBER, 2016

JBS CONSULTING, PA
7332 Cotesworth Drive
Wilmington, NC 28045
(910) 619-9890
LICENSE NUMBER C-2525
PLANNING - ENGINEERING - PROJECT MANAGEMENT

NORTH CAROLINA PROFESSIONAL SEAL 022371 ENGINEER BRADFORD SEDGWICK

EXISTING SITE
FIAT DISPLAY LOT
6421 MARKET STREET
WILMINGTON, NORTH CAROLINA

GILLILAN PROPERTIES, LLC
JOHN S. GILLILAN, AGENT
219 COLLEGE ROAD
WILMINGTON, NC 28406

SHEET C1 of 6
JOB NO. 032-011

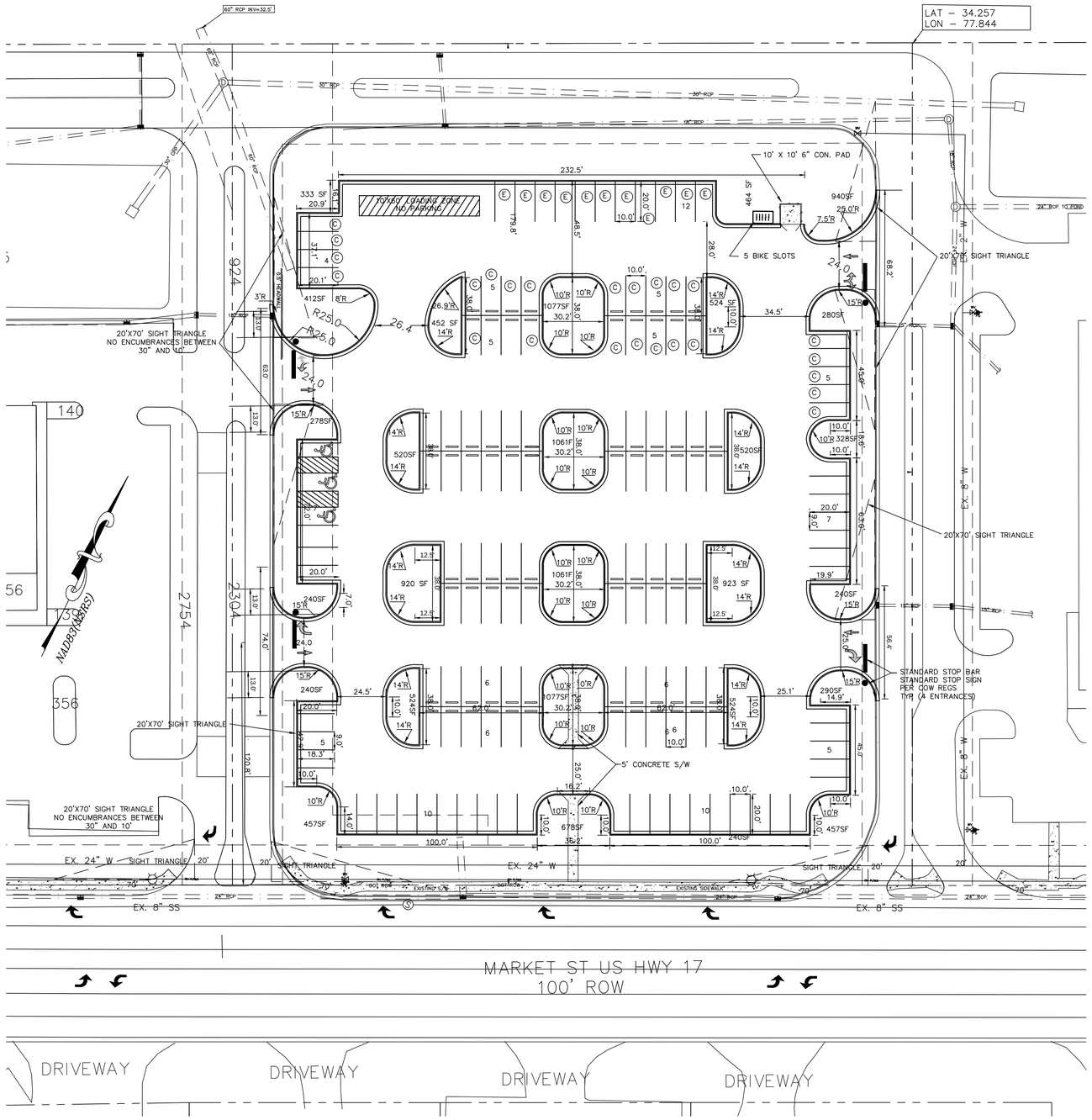

SITE PLAN
SCALE 1" = 30'

SITE DATA

ADDRESS ..... 6421 MARKET STREET
WILMINGTON, NC 28403

PARCEL ID NUMBERS R04300–007–037–000
DEED BOOK & PAGE ..... D.B. 5527 PG. 1251

MAP BOOK & PAGE..... MB 43 PG. 227
MB 47 PG. 241

ZONING ..... RB–REGIONAL BUSINESS
CITY OF WLMINGTON

TOTAL LOT AREA ..... 1.20 ACRES (6415)
2.06 ACRES (6421)
3.26 ACRES

CAMA LAND USE CLASSIFICATION .. URBAN

PROPOSED USE.....CAR DISPLAY/PARKING LOT

NUMBER OF BUILDINGS ..... 0 PROPOSED

BUILDING SQUARE FOOTAGE..... 0 SF

BUILDING COVERAGE..... 0 SF/ (3.26 AC X 43560) = 0%

PAVEMENT/BUA CALCULATIONS FOR THE STORMWATER PERMT

PROJECT DRAINAGE BASINS

	BMP #1	BMP #2	BMP #3	TOTAL
TOTAL DRAINAGE AREA (SF)	181,139	144,582	53,918	379,639
TOTAL IMPERVIOUS				
BUILDINGS	19,343	23,097	0	42,440
IMPERVIOUS PAVEMENT	103,573	69,864	16,373	189,810
PERVIOUS PAVEMENT**	0	0	4,674	4,674
IMPERVIOUS S/W	3,024	0	1,674	4,698
FUTURE DEVELOPMENT	2,088	973	0	3,061
TOTALS	128,028	93,934	22,721	258,704

** 18,695 SF OF PERVIOUS CONCRETE W/ 75% CREDIT = 4,674 SF

EXISTING ON SITE 179,103 SF (TO REMAIN)

PROPOSED
ASPHALT 57,235 SF
BUILDING 0 SF
CONCRETE 610 SF
PERMEABLE CONCRETE 18,695 SF
TOTAL PROPOSED 76,540 SF

	REQUIRED	PROPOSED
MIN. LOT AREA	1 ACRE	3.26 ACRES
MIN. LOT WIDTH	100'	339.01'
MAX. LOT COVERAGE	40%	7.9%
FRONT BUILDING SETBACK	50'	143.1'
REAR BUILDING SETBACK	15'	179.8'
SIDE BUILDING SETBACK	0'	
RIGHT SIDE		111.9'
LEFT SIDE		110.4'
MAX. BUILDING HEIGHT	35'	18.0'

PARKING REQUIREMENTS

TOTAL PROVIDED 147 SPACES
+ 3 H/C
150 SPACES TOTAL

BICYCLE PARKING
5 PROVIDED.

SOLID WASTE – SOLID WASTE DISPOSAL WILL BE BY DUMPSTER. DUMPSTER PAD IS LOCATED IN THE REAR RIGHT HAND SIDE OF THE PARKING LOT. THE DUMPSTER PAD WILL BE SCREENED WITH A CHAIN LINK FENCE WITH BUILDER SLIDES ON ALL SIDES.

UTILITY INFORMATION
WATER: 000 GPD (CURRENT USE)
WATER 000 GPD (PROPOSED USE) + IRRIGATION (SEPARATE TAP)
SEWER 000 GPD (CURRENT USE)
SEWER 000 GPD (PROPOSED USE)

RECEIVING STREAM SMITH CREEK
RIVER BASIN CAPE FEAR
STREAM INDEX NUMBER CPF 17 18–74–63
WATER CLASSIFICATION "C, Sw"

LANDSCAPE REQUIREMENTS

SEE LANDSCAPE PLAN OR COMPLIANCE

STREET YARD BUFFER

ZONING RB (MULTIPLIER = 25)
297' FRONTAGE * 25 = 7425 SF REQUIRED (7528 SF PROVIDED)
7528/600 = 12.5
13 CANOPY OR 38 UNDERSTORY TREES AND 75 – 12' SHRUBS

PARKING LOT LANDSCAPING

ALL INTERIOR ISLANDS GREATER THAN 216 SF
1 – SHADE TREE PER SMALL ISLAND (4 ISLANDS TOTAL)
2 – SHADE TREES PER LARGE ISLAND 92 ISLANDS TOTAL)

PERIMETER LANDSCAPING

923' – 96' (DRIVEWAY) = 827'
10' MIN WIDTH (12 AVERAGE PROVIDED)
1 – TREE PER 18' (MAX) OR 27' (MIN)
46– TREES (MAX)
31 – TREES (MIN)

FOUNDATION PLANTINGS

NO FOUNDATION ON PROJECT

BUFFER YARD

NOT REQUIRED ON THIS PARCEL

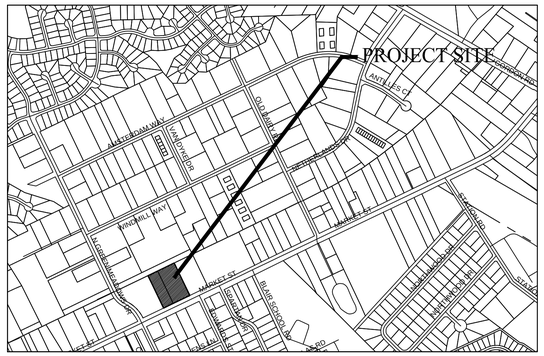

VICINITY MAP
NTS

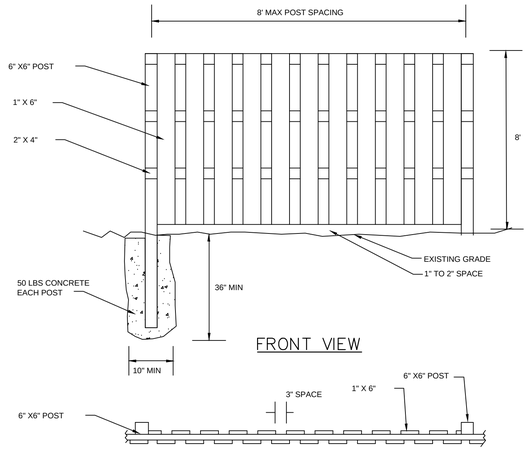

FRONT VIEW

TOP VIEW

ALL FENCE MATERIALTO BE PRESSURE TREATED PINE USE
GALVANIZED FASTNERS

SHADOW BOX FENCE DETAIL
N.T.S.

LEGEND

EXIST. SPOT ELEVATION	25.0
PRO. SPOT ELEVATION	20.0
SILT FENCE	
DRAINAGE RUNOFF FLOW	
LIMITS OF CONSTRUCTION	
ASPHALT	
CONC. PAVEMENT	
GRAVEL	
EDGE OF WOODS	EOWDS
TOP OF BANK	TOB
EDGE OF WATER	EOW
EDGE OF GRAVEL	EOG

BEFORE YOU DIG
STOP
CALL 1 800 632-4949
N.C. ONE-CALL CENTER
IT'S THE LAW

30' 0 30' 60'
SCALE: 1"=30' (Horiz.)

CITY OF WILMINGTON NORTH CAROLINA
Public Services • Engineering Division
APPROVED STORMWATER MANAGEMENT PLAN
Date:_____ Permit #_____
Signed: _____

Approved Construction Plan

	Name	Date
Planning		
Traffic		
Fire		
CFPUA		

NUMBER	DATE	REVISION
R1	7-26-16	RESUBMITTED TO TRC WITHOUT BUILDING

DESIGN BY: BDS
DRAWN BY: BDS
CHECKED BY: BDS
DATE OCTOBER, 2106

JBS CONSULTING, PA
7332 Colesworth Drive
Wilmington, NC 28045
(910) 619-9990
LICENSE NUMBER C-2525
PLANNING - ENGINEERING - PROJECT MANAGEMENT

NORTH CAROLINA PROFESSIONAL SEAL 036375 ENGINEER BRADFORD SEDGWICK

SITE PLAN
FIAT DISPLAY LOT
6421 MARKET STREET
WILMINGTON, NORTH CAROLINA

GILLILAN PROPERTIES, LLC
JOHN S. GILLILAN, AGENT
219 COLLEGE ROAD
WILMINGTON, NC 28406

SHEET C2 of 6

JOB NO. 032–011

10/17/2016 3:14:21 PM

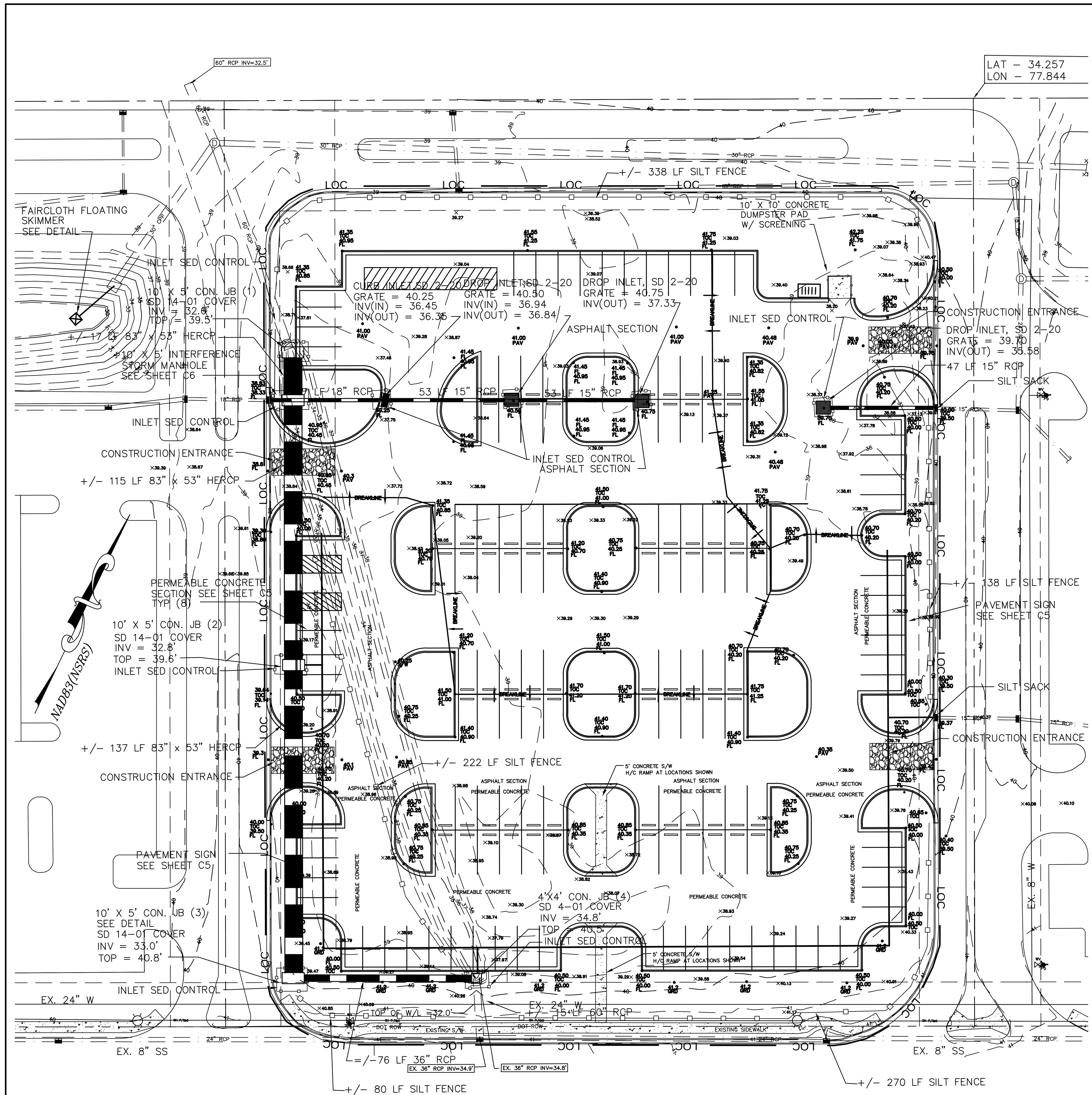

GRADING PLAN
SCALE 1" = 30'

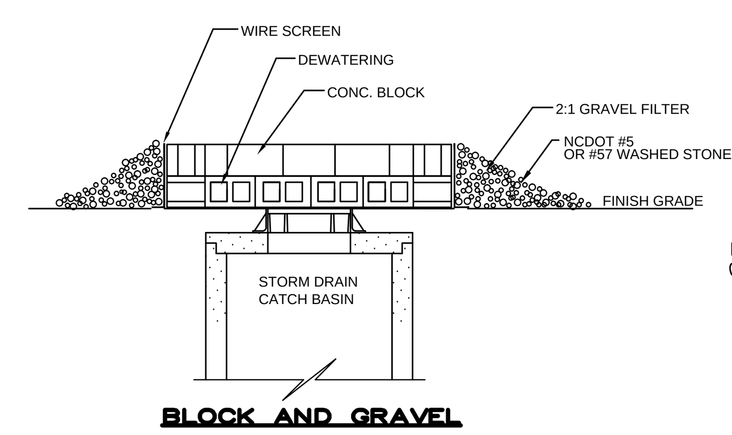

BLOCK AND GRAVEL

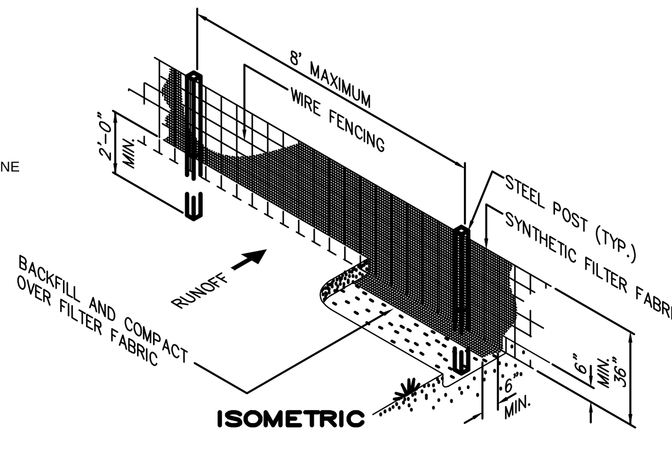

SILT FENCE DETAIL
NOT TO SCALE

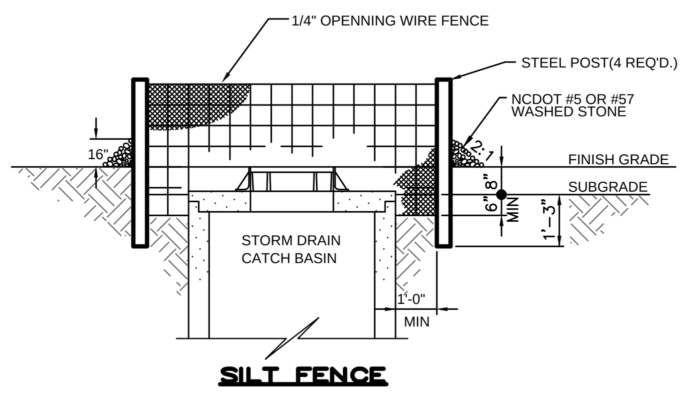

SILT FENCE

NOTE: USE BLOCK AND GRAVEL INLET PROTECTION IN AREAS WERE SILT FENCE INLET PROTECTION CAN NOT BE INSTALLED.

INLET SEDIMENTATION CONTROL
NOT TO SCALE

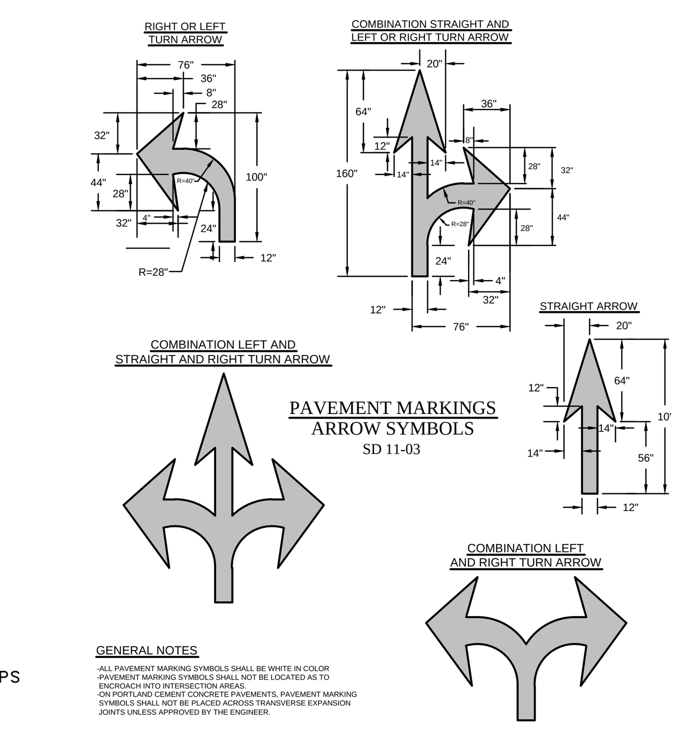

PAVEMENT MARKINGS
ARROW SYMBOLS
SD 11-03

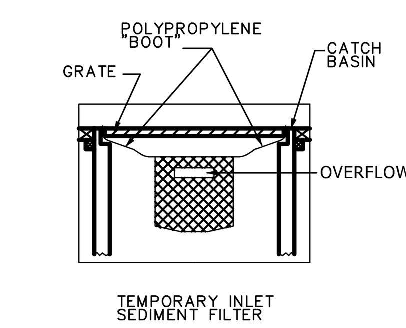

TEMPORARY INLET SEDIMENT FILTER

NOTE:
TEMPORARY INLET SEDIMENT FILTER TO BE INSTALLED ON ALL PAVED CATCH BASINS OR STORM INLETS. INLET FILTER TO BE SIMILAR TO "STREAMGUARD" AS MANUFACTURED BY STORMWATER SERVICES CORPORATION (206-767-0441) OR "SILTSACK" AS MANUFACTURED BY ATLANTIC CONSTRUCTION FABRICS, INC. (800-448-3636). CLEAN FILTER AS NEEDED.

MAINTENANCE PLAN

SILT SACK TO BE INSPECTED WEEKLY AND AFTER EVERY RAIN EVENT.

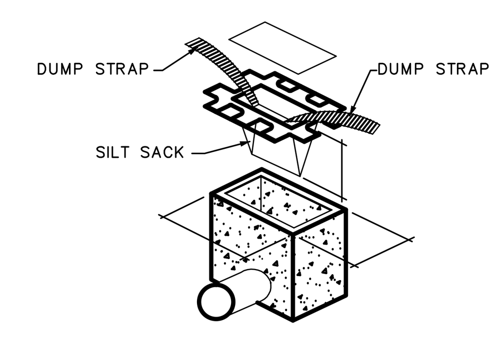

SILT SACK DETAIL
NTS

LABEL	1) GROUND STABILIZATION		
(cross-hatch)	SITE AREA DESCRIPTION	STABLIZATION TIME FRAME	STABILIZATION TIME FRAME EXCEPTIONS
	-PERIMETER DIKES, DITCHES AND SLOPES	7 DAYS	NONE
	-HIGH QUALITY WATER (HQW) ZONES	7 DAYS	NONE
	SLOPES STEEPER THAN 3:1	7 DAYS	IF SLOPES ARE 10' OR LESS IN LENGTH AND ARE NOT SEEPER THAN 2:1 14 DAYS ARE ALLOWED
(diagonal hatch)	SLOPES 3:1 OR FLATTER	14 DAYS	7 DAYS FOR SLOPES GREATER THAN 50 FEET IN LENGTH
	-ALL OTHER AREAS WITH SLOPES FLATTER THAN 4:1	14 DAYS	NONE (EXCEPT FOR PERIMTERS AND HQW ZONES)

2) BUILDING WASTES HANDLING

-NO PAINT OR LIQUID WASTES IN STREAM OF STORM DRAINS

-DEDICATED AREAS FOR DEMOLITION, CONSTRUCTION AND OTHER WASTES MUST BE LOCATED 50' FROM STORM DRAINS AND STREAMS UNLESS NO REASONABLE ALTERNATIVES AVAILABLE

-EARTHEN-MATERIALS STOCKPILES MUST BE LOCATED 50 FROM STORM DRAIANS AND STREAMS UNLESS NO REASONABLE ALTERNATIVES AVAILABLE

-CONCRETE MATERIALS MUST BE CONTROLLED TO AVOID CONTACT WITH SURFACE WATERS, WETLANDS, OR BUFFERS.

3) INSPECTIONS

-SAME WEEKLY INSPECTION REQUIREMENTS

-SAME RAIN GAUGE & INSPECTIONS AFTER 0.5" RAIN EVENT

-INSPECTIONS ARE ONLY REQUIRED DURING "NORMAL BUSINESS HOURS"

-INSPECTION REPORTS MUST BE AVAIABLE ON-SITE DURING BUSINESS HOURS UNLESS A SITE-SPECIFIC EXEMPTION IS APPROVED

-RECORDS MUST BE KEPT FOR 3 YEARS AND AVAIABLE UPON REQUEST

-ELECTRONICALLY-AVAIABLE RECORDS MAY BE SUBSTITUTES UNDER CERTAIN CONDITIONS

4) SEDIMENT BASINS

-OUTLET STRUCTURES MUST WITHDRAW FROM BASIN SURFACES UNLESS DRAINAGE AREA IS LESS THAN 1 ACRE

-USE ONLY DWQ-APPROVED FLOCCULANTS

NPDES - SPECIFIC PLAN SHEET NOTES

1. THIS PAGE IS SUBMITTED TO COMPLY WITH NPDES GENERAL STORMWATER PERMIT NCG010000:
2. THIS PAGE CAN BE APPROVED BY THE COUNTY PURSUANT TO NPDES GENERAL STORMWATER PERMIT NCG010000 ONLY.
3. THIS PAGE OF THE APPROVED PLANS IS ENFORCEABLE EXCLUSIVELY PURSUANT TO NPDES GENERAL STORMWATER PERMIT NCG010000.
4. THE COUNTY IS NOT AUTHORIZED TO ENFORCE THIS PAGE OF THE PLANS AND IT IS NOT PART OF THE APPROVED PLANS FOR THE PURPOSES OF ENFORCEMENT ACTION UNDER THE CITY CODE.

EROSION CONTROL NOTES

1. ANY CONSTRUCTION ACTIVITY BEYOND THE 2.7 ACRE LIMITS SHOWN ON THE PLAN IS A VIOLATION OF THE COUNTY EROSION CONTROL ORDINANCE AND IS SUBJECT TO FINES.
2. CONTRACTOR SHALL REMOVE ALL TREES AND VEGETATION WITHIN ROAD RIGHT OF WAYS UNLESS OTHERWISE DESIGNATED TO REMAIN.
3. CONTRACTOR SHALL RAKE AND REMOVE ROOTS, STUMPS, VEGETATION, DEBRIS, EXISTING STRUCTURES ABOVE AND BELOW GRADE, ORGANIC MATERIAL OR ANY OTHER UNSUITABLE MATERIAL WITH IN THE LIMITS OF CONSTRUCTION.
4. CONTRACTOR SHALL COORDINATE WITH OWNER AND THEIR GEOTECHNICAL REPRESENTATIVE TO COORDINATE REMOVAL OF ANY UNSUITABLE SOILS.
5. CLEARED, GRUBBED, STRIPPED OR OTHER WASTE MATERIALS SHALL BE REMOVED FROM THE SITE AND DISPOSED OF IN A PROPERLY PERMITTED FACILITY.
6. THE CONTRACTOR SHALL FURNISH ANY REQUIRED BORROW MATERIALS FROM A PROPERLY PERMITTED OFF-SITE FACILITY.
7. ALL GRADED SLOPES MUST BE SEEDED AND MULCHED WITHIN 21 CALENDAR DAYS OF COMPLETION OF GRADING. STABILIZE AREAS OTHER THAN SLOPES WITHIN 15 WORKING DAYS OR 90 CALENDAR DAYS, WHICHEVER IS SHORTER.
8. ADDITIONAL MEASURES TO CONTROL EROSION AND SEDIMENT MAY BE REQUIRED BY A REPRESENTATIVE OF THE COUNTY ENGINEERING DEPARTMENT.
9. SLOPES SHALL BE GRADED NO STEEPER THAN 3:1.
10. ADDITIONAL DEVICES MAY BE REQUIRED AS AGREED UPON BY THE FIELD INSPECTOR, ENGINEER, AND OWNER.
11. IF ACTIVE CONSTRUCTION CEASES IN ANY AREA FOR MORE THAN 15 CALENDAR DAYS, ALL DISTURBED AREAS MUST BE SEEDED, MULCHED, AND TACKED.

GRADING NOTES

1. INITIATE EROSION CONTROL SEQUENCE BEFORE BEGINNING CLEARING AND GRADING OPERATIONS.
2. CLEAR AREAS TO BE GRADED OF ALL VEGETATION. PROTECT VEGETATION BEYOND GRADING LIMITS.
3. STRIP TOPSOIL TO FULL DEPTH IN AREAS TO BE GRADED AND STOCKPILE.
4. COMPACT ALL FILL AREAS TO 95% OF MAXIMUM DENSITY.
5. ALL BANKS AND SWALE SIDE SLOPES SHALL BE GRADED WITH NO GREATER THAN 3:1 SLOPES.
6. ALL AREAS ARE TO BE GRADED SO THAT NO AREAS OF STANDING WATER OCCUR.
7. PROPOSED SPOT ELEVATIONS ARE SHOWN AT FINISHED GRADE.
8. OPERATOR SHALL FIELD VERIFY EXISTING TOPOGRAPHY IN RELATION TO THE PROPOSED GRADES TO ENSURE DRAINAGE IN THE DIRECTIONS INDICATED ON THE PLAN.

CONSTRUCTION SEQUENCE

1. OBTAIN ALL NECESSARY PERMIT APPROVALS PRIOR TO ANY LAND DISTURBING ACTIVITY.
2. HOLD A PRE-CONSTRUCTION MEETING WITH THE EROSION CONTROL INSPECTOR.
3. INSTALL THE FAIRCLOTH SKIMMER ON THE "AUTO PALACE" POND. INSTALL CONSTRUCTION ENTRANCE (S) INTO SITE.
4. INSTALL SILT FENCE NEXT TO DITCH.
5. INSTALL 60" PIPE WITH BOXES. CONNECT TO EXISTING SYSTEM. THIS WORK SHOULD BE SCHEDULED FOR DRY WEATHER ONLY AND COMPLETED FIRST PRIOR TO CLEARING AND GRUBBING REST OF SITE.
6. INSTALL 18" RCP REACH TO CONNECT TO "AUTO PALACE" POND. IMMEDIATELY INSTALL INLET PROTECTION AROUND INLETS. DO NOT INSTALL 15" RCP REACH TO "BRITT POND" UNTIL SITE IS STABILIZED.
7. CLEAR AND GRUB SITE. DIRECT DRAINAGE TOWARD "AUTO PALACE" PIPING SYSTEM DURING CONSTRUCTION.
8. AREAS TO BE USED FOR THE PREVIOUS PAVEMENTS ON THIS PROJECT SHALL BE ROPED OFF AND NO CONSTRUCTION ACTIVITY NOR STOCKPILE OF MATERIALS SHALL BE PREFORMED IN THESE AREAS.
9. CONSTRUCT BUILDING PAD.
10. STABILIZE SITE WITH STONE BASE.
11. INSTALL 15" RCP PIPE REACH TOWARD "BRITT" POND AFTER BASE FOR PARKING LOT IS INSTALLED. NO STORMWATER SHALL BE DIRECTED TOWARD THE BRITT POND DURING CONSTRUCTION. ONLY AFTER THE SITE IS STABILIZED SHALL STORMWATER BE ALLOWED TO DRAIN TOWARD THE BRITT POND.
12. PERVIOUS PAVEMENT SECTION TO BE INSTALLED AFTER THE REMANDER OF THE PARKING LOT IS INSTALLED. ONCE PERVIOUS PAVEMENT HAS BEEN INSTALLED THIS AREA WILL BE ROPED OFF ONCE AGAIN AND NO CONSTRUCTION ACTIVITY TO OCCUR ON THESE AREAS. GENERAL CONTRACTOR IS TO ASSURE THAT THESE AREAS ARE KEPT FROM FROM CONSTRUCTION AND LANDSCAPE DEBRIS.
13. PROVIDE TEMPORARY PROTECTION MEASURES AND DEVICES AS REQUIRED UNTIL UNDERGROUND UTILITIES AND PAVEMENT SECTION IS COMPLETE AND FINAL GRADES ARE STABILIZED WITH TEMPORARY VEGETATIVE COVER.
14. STABILIZE (FERTILIZE, SEED, AND MULCH) ALL DISTURBED AREAS AS SOON AS FINAL GRADES ARE ESTABLISHED.
15. ONCE CONSTRUCTION IS COMPLETE AND ALL DISTURBED AREAS ARE STABILIZED, REMOVE TEMPORARY EROSION CONTROL MEASURES, REMOVE SEDIMENT FROM SEDIMENT BASIN.

EROSION CONTROL MAINTENANCE PLAN

1. ALL EROSION AND SEDIMENT CONTROL PRACTICES WILL BE CHECKED FOR STABILITY AND OPERATION FOLLOWING EVERY RUNOFF - PRODUCING RAINFALL BUT IN NO CASE LESS THAN ONCE EVERY WEEK. ANY NEEDED REPAIRS WILL BE MADE IMMEDIATELY TO MAINTAIN ALL PRACTICES AS DESIGNED.
2. SEDIMENT WILL BE REMOVED FROM BEHIND THE SEDIMENT FENCE WHEN IT BECOMES ABOUT 0.5 FEET DEEP AT THE FENCE. THE SEDIMENT FENCE WILL BE REPAIRED OR REPLACED AS NECESSARY TO MAINTAIN A BARRIER.
3. ALL AREAS WILL BE FERTILIZED, RESEEDED AS NECESSARY, AND MULCHED ACCORDING TO SPECIFICATIONS IN THE VEGETATIVE PLAN TO MAINTAIN A VIGOROUS, DENSE VEGETATIVE COVER.
4. GRAVEL CONSTRUCTION ENTRANCE TO BE CLEANED WHEN SEDIMENT ACCUMULATIONS ARE VISIBLE OR SEDIMENT IS DEPOSITED ON THE ASPHALT AND STONE WILL BE PERIODICALLY TOP DRESSED WITH 2 INCHES OF #4 STONE TO MAINTAIN 6 INCH DEPTH.
5. INSPECT SWALES (PERMANENT DIVERSIONS) AFTER EVERY RAINFALL DURING THE CONSTRUCTION OPERATION. IMMEDIATELY REMOVE ANY OBSTRUCTIONS FROM THE FLOW AREA AND REPAIR THE SWALE. CHECK OUTLETS AND MAKE TIMELY REPAIRS AS NEEDED. MAINTAIN THE VEGETATION IN A VIGOROUS, HEALTHY CONDITION AT ALL TIMES.
6. INSPECT SKIMMER SEDIMENT BASINS AT LEAST WEEKLY AND AFTER EACH SIGNIFICANT ($1\frac{1}{2}$" OR GREATER) RAINFALL EVENT AND REPAIR IMMEDIATELY. REMOVE SEDIMENT AND RESTORE THE BASIN TO ITS ORGINAL DIMENSIONS WHEN SEDIMENT ACCUMULATES TO ONE-HALF THE HEIGHT OF THE FIRST BAFFLE. PULL THE SKIMMER TO ONE SIDE SO THAT THE SEDIMENT UNDERNEATH IT CAN BE EXCAVATED. EXCAVATE THE SEDIMENT FROM THE ENTIRE BASIN, NOT JUST AROUND THE SKIMMER OR THE FIRST CELL. MAKE SURE VEGETATION GROWING IN THE BOTTOM OF THE BASIN DOES NOT HOLD DOWN THE SKIMMER.

REPAIR THE BAFFLES IF THEY ARE DAMAGED. RE-ANCHOR THE BAFFLES IF WATER IS FLOWING UNDERNEATH OR AROUND THEM.

IF THE SKIMMER IS CLOGGED WITH TRASH AND THERE IS WATER IN THE BASIN, USUALLY JERKING ON THE ROPE WILL MAKE THE SKIMMER BOB UP AND DOWN AND DISLODGE THE DEBRIS AND RESTORE FLOW. IF THIS DOES NOT WORK, PULL THE SKIMMER OVER TO THE SIDE OF THE BASIN AND REMOVE THE DEBIS. ALSO CHECK THE ORIFICE INSIDE THE SKIMMER TO SEE IF IT IS CLOGGED; IF SO REMOVE DEBRIS.

IF THE SKIMMER ARM OR BARREL PIPE IS CLOGGED, THE ORIFICE CAN BE REMOVED AND THE OBSTRUCTION CLEARED WITH A PLUMBER'S SNAKE OR BY FLUSHING WITH WATER. BE SURE TO REPLACE THE ORIFICE BEFORE REPOSITIONING THE SKIMMER.

CHECK THE FABRIC LINED SPILLWAY FOR DAMAGE AND MAKE ANY REQUIRED REPAIRS WITH FABRIC THAT SPANS THE FULL WIDTH OF THE SPILLWAY.CHECK THE EMBANKMENT, SPILLWAYS, AND OUTLET FOR EROSION DAMAGE AND INSPECT THE EMBANKMENT FOR PIPING AND SETTLEMENT. MAKE ALL NECESSARY REPAIRS IMMEDIATELY. REMOVE ALL TRASH AND OTHER DEBRIS FROM THE SKIMMER POOL AREA.

FREEZING WEATHER CAN RESULT IN ICE FORMING IN THE BASIN. SOME SPECIAL PRECAUTIONS SHOULD BE TAKEN IN THE WINTER TO PREVENT THE SKIMMER FROM PLUGGING WITH ICE.

7. INSPECT INLETS AT LEAST WEEKLY AND AFTER EACH SIGNIFICANT ($1\frac{1}{2}$" OR GREATER) RAINFALL EVENT. CLEAR THE WIRE OF ANY DEBRIS OR OTHER OBJECTS TO PROVIDE ADEQUATE FLOW FOR SUBSEQUENT RAINS. TAKE CARE NOT TO DAMAGE OR UNDERCUT THE WIRE MESH DURING SEDIMENT REMOVAL. REPLACE STONE AS NEEDED.
8. POND IS TO USED AS A SEDIMENT BASIN DURING THE CONSTRUCTION OF THE SITE.
9. ONCE THE SITE IS STABILIZED THE POND IS TO BE CLEARED OF ALL SEDIMENT AND ANY NECESSARY REPAIRS ARE TO BE MADE.

CITY OF WILMINGTON
NORTH CAROLINA
Public Services ● Engineering Division
APPROVED STORMWATER MANAGEMENT PLAN
Date:__________ Permit #__________
Signed:__________

Approved Construction Plan

	Name	Date
Planning		
Traffic		
Fire		
CFPUA		

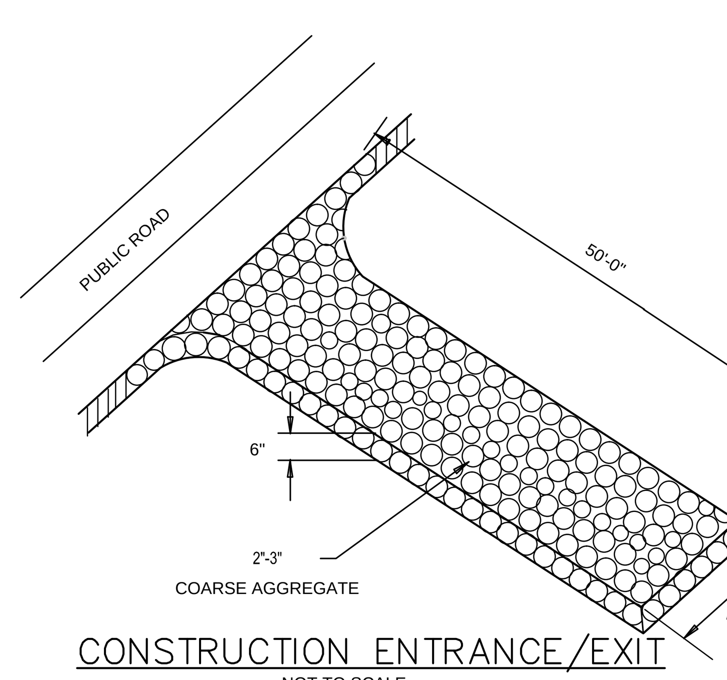

CONSTRUCTION ENTRANCE/EXIT
NOT TO SCALE

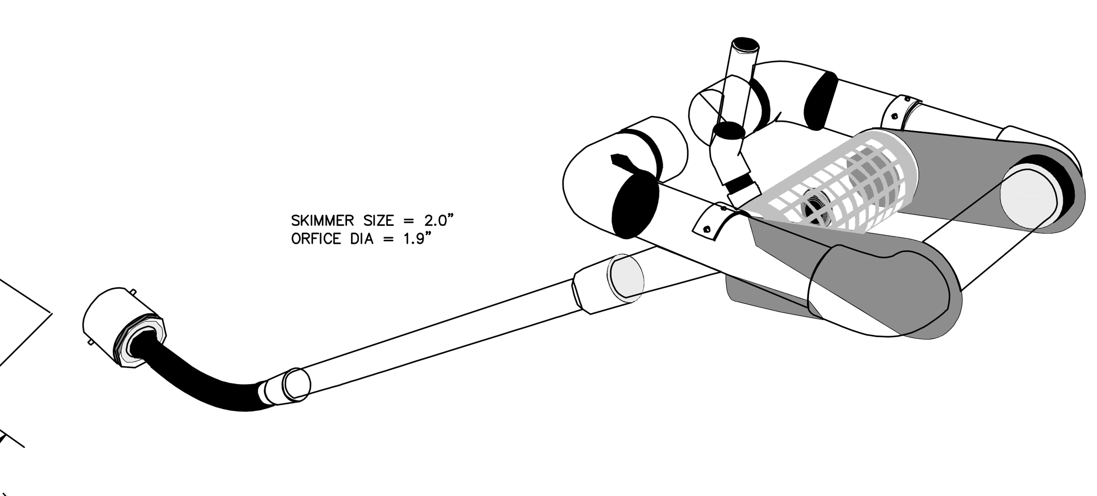

FAIRCLOTH FLOATING SKIMMER
NOT TO SCALE

LEGEND

EXIST. SPOT ELEVATION	
PRO. SPOT ELEVATION	
SILT FENCE	
DRAINAGE RUNOFF FLOW	
LIMITS OF CONSTRUCTION	
ASPHALT	
CONC. PAVEMENT	
GRAVEL	
EDGE OF WOODS	EOWDS
TOP OF BANK	TOB
EDGE OF WATER	EOW
EDGE OF GRAVEL	EOG

BEFORE YOU DIG STOP CALL 1-800-632-4949 N.C. ONE-CALL CENTER IT'S THE LAW

30' 0 30' 60'
SCALE: 1"=30' (Horiz.)

NUMBER	DATE	REVISION
R1	7-26-16	RESUBMITTED TO TRC WITHOUT BUILDING

DESIGN BY: BDS
DRAWN BY: BDS
CHECKED BY: BDS
DATE: OCTOBER, 2106

JBS CONSULTING, PA
7332 Cotesworth Drive
Wilmington, NC 28045
(910) 619-9990
LICENSE NUMBER C-2525
PLANNING - ENGINEERING - PROJECT MANAGEMENT

NORTH CAROLINA SEAL 026373 BRADFORD SEDGWICK

GRADING, DRAINAGE & EROSION CONTROL

FIAT DISPLAY LOT
6421 MARKET STREET
WILMINGTON, NORTH CAROLINA

GILLIAN PROPERTIES, LLC
JOHN S. GILLIAN, AGENT
219 COLLEGE ROAD
WILMINGTON, NC 28406

SHEET C3 of 6
JOB NO. 032-011

10/17/2016 3:14:25 PM

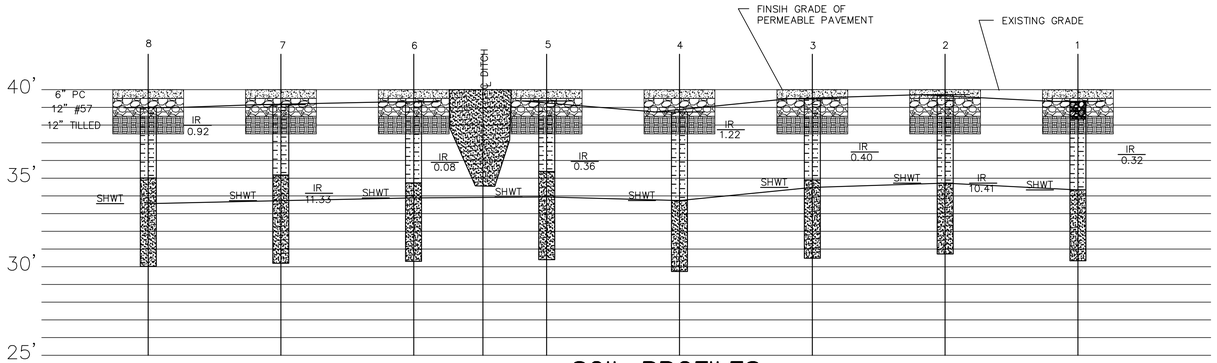

SOIL PROFILES
NTS

AGGREGATE DEPTH FOR WATER QUALITY STORM D(WQ)

D(WQ) = DEPTH OF AGGREGATE REQUIRED

P = DEPTH OF DESIGN STORM (INCHES)
R = A(A)/A(P) - RATIO OF IMPERVIOUS BUA TO PERMEABLE PAVEMENT
N = PERCENT VOIDS IN GRAVEL AGGREGATE (40%)

$$D(WQ) = \frac{P(1+R)}{N}$$

P	A(A)	A(P)	R	N	D(WQ)
1.5	18047	18695	0.97	0.4	7

Infiltration System:

1. The facility shall be routinely checked for and cleared of all accumulation of debris and the detention facility outlet structure cleared of any blockage.

2. Storm drainage pipes and structures shall be periodically inspected for debris and sediment build–up. They shall be cleaned as necessary to provide for the conveyance of storm water as designed.

3. The pipes and stone installed to provide infiltration shall be kept free of sediment buildup. The infiltration facility shall be maintained in accordance with the Stormwater Management Plan approved by the City and on file in the office of the City Engineer. The pipe shall be inspected on a regular basis but not less than every six months. Debris and sedimentation shall be removed if
(a) The infiltration capacity is impaired and/or,
(b) The sediment and/or debris restricts the free flow of storm water into the infiltration system and surrounding soils.

4. The infiltration system shall be removed and replaced with new material when the system no longer permits the storm water to freely infiltrate into the surrounding soils.

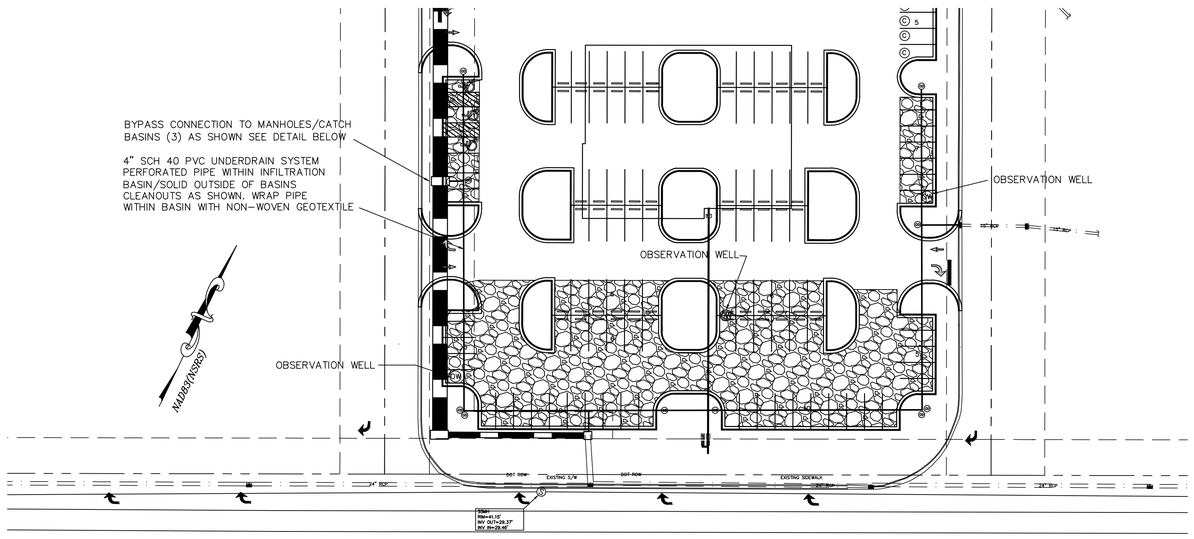

INFILTRATION PLAN
SCALE 1" = 40'

.\PERMEABLE PAVEMENT SIGN.jpg

NOTE: EXAMPLE OF SIGN TO BE PLACE WHERE SHOWN ON THE PLANS. SIGN 18" X 24" ON STANDARD METAL BACKING AND MOUNTED WITH STANDARD STREET SIGN MATERIALS AND METHODS.

EXAMPLE PERMEABLE PAVEMENT SIGN
NOT TO SCALE

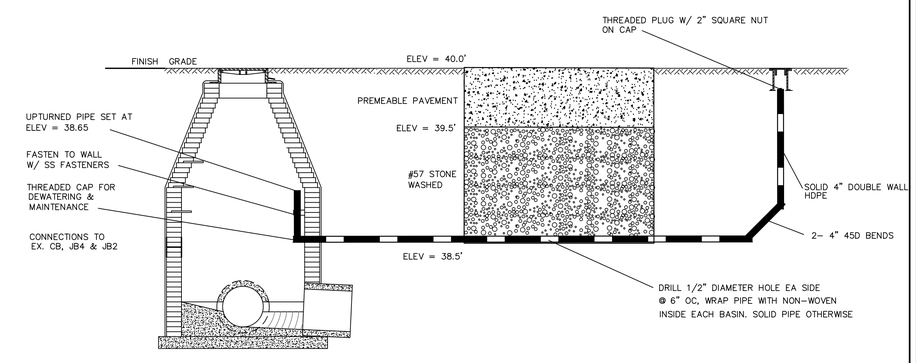

INFILTRATION BED UNDERDRAIN DETAIL
NOT TO SCALE

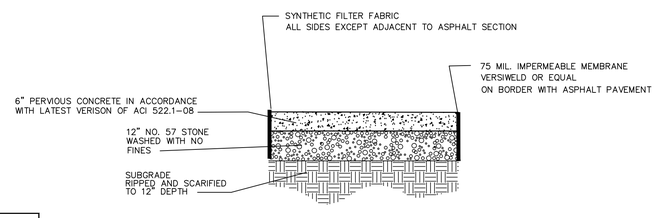

PERVIOUS CONCRETE PAVEMENT SECTION
NOT TO SCALE

NOTE TO CONTRACTOR

DURING CONSTRUCTION, PRIOR TO INSTALLATION OF THE SUB–GRADE, INFILTRATION/HYDRAULIC CONDUCTIVITY TESTING MUST BE PREFORMED IN THE SURFACE OF THE UNDERLYING SOIIL. TWO TEST SPOTS, RANDOM SHALL BE PREFORMED. RESULTS OF TESTING TO BE REVIEWED BY CIVIL ENGINEER PRIOR TO THE INSTALLATION OF THE SUB–GRADE STONE.

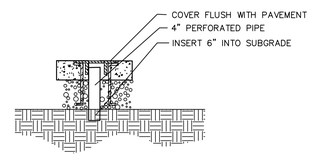

OBSERVATION WELL
NOT TO SCALE

CITY OF WILMINGTON NORTH CAROLINA
Public Services • Engineering Division
APPROVED STORMWATER MANAGEMENT PLAN
Date:_____ Permit #_____
Signed: _____

Approved Construction Plan

	Name	Date
Planning		
Traffic		
Fire		
CFPUA		

NUMBER	DATE	REVISION
R1	7-26-16	RESUBMITTED TO TRC WITHOUT BUILDING

10/17/2016 3:14:31 PM

DESIGN BY: BDS
DRAWN BY: BDS
CHECKED BY: BDS
DATE OCTOBER, 2016

JBS CONSULTING, PA
7332 Catesworth Drive
Wilmington, NC 28045
(910) 619-9990
LICENSE NUMBER C-2525
PLANNING - ENGINEERING - PROJECT MANAGEMENT

NORTH CAROLINA PROFESSIONAL SEAL 026373 ENGINEER BRADFORD SEDGWICK

INFILTRATION SYSTEM

FIAT DISPLAY LOT
6121 MARKET STREET
WILMINGTON, NORTH CAROLINA

GILLILAN PROPERTIES, LLC
JOHN S. GILLILAN, AGENT
219 COLLEGE ROAD
WILMINGTON, NC 28406

SHEET C5 of 6

JOB NO. 032–011

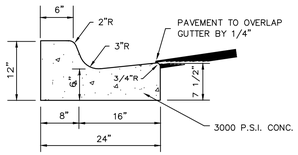

NOTE: WHEN USED ON THE HIGH SIDE OF ROADWAYS, THE CROSS SLOPE OF THE GUTTER SHALL MATCH THE CROSS SLOPE OF THE ADJACENT PAVEMENT AND THE THICKNESS OF THE LIP SHALL BE 6" UNLESS OTHERWISE SHOWN.

2' CURB AND GUTTER DETAIL

NOT TO SCALE

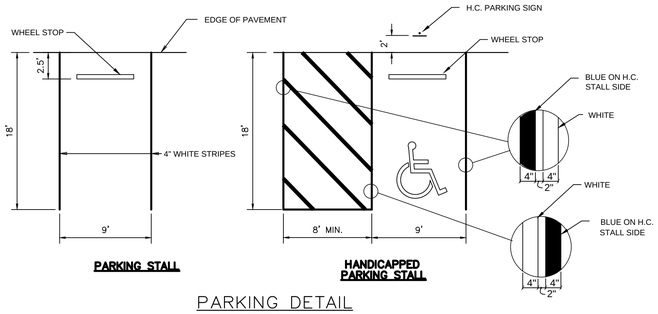

PARKING DETAIL

NOT TO SCALE

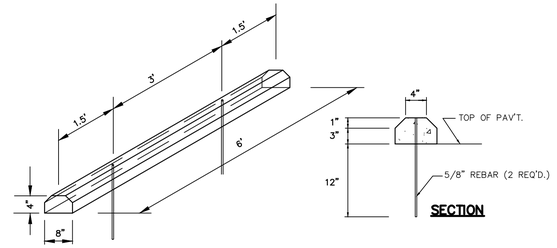

WHEEL STOP DETAIL

NOT TO SCALE

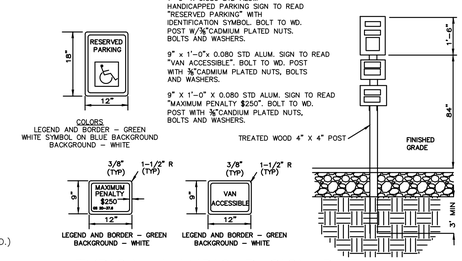

TYPICAL HANDICAP SIGN DETAIL

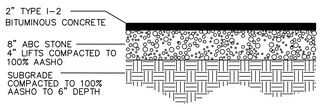

ASPHALT PAVEMENT SECTION

NOT TO SCALE

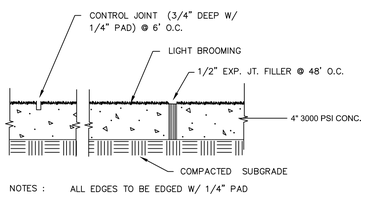

NOTES : ALL EDGES TO BE EDGED W/ 1/4" PAD

CONCRETE WALK SECTION

NOT TO SCALE

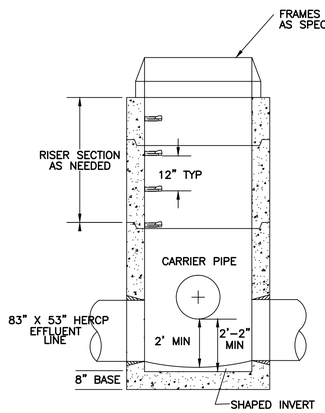

#4 @ 6" OCEW (Min)
4000 PSI @ 28 DAYS

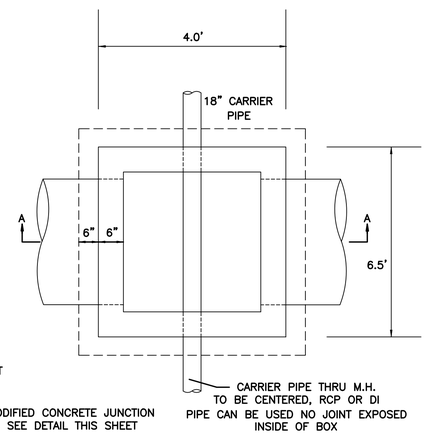

USE MODIFIED CONCRETE JUNCTION BOX. SEE DETAIL THIS SHEET

INTERFERENCE STORM DRAIN MANHOLE

NOT TO SCALE

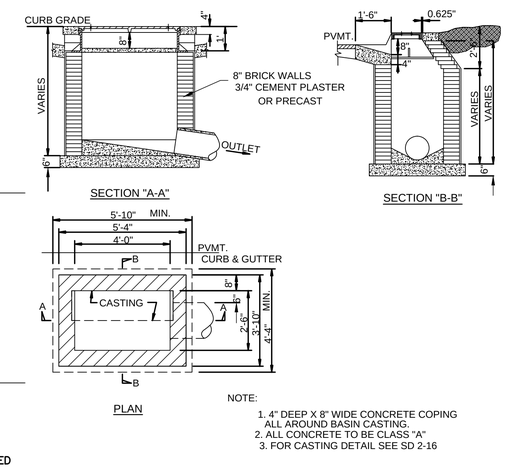

NOTE:
1. 4" DEEP X 8" WIDE CONCRETE COPING ALL AROUND BASIN CASTING.
2. ALL CONCRETE TO BE CLASS "A"
3. FOR CASTING DETAIL SEE SD 2-16

CATCH BASIN

SD 2-01
NOT TO SCALE

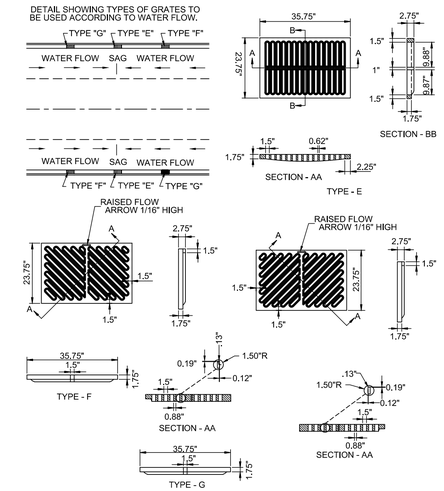

CATCH BASIN GRATE FOR PRE-CAST SD 2-20

NOT TO SCALE

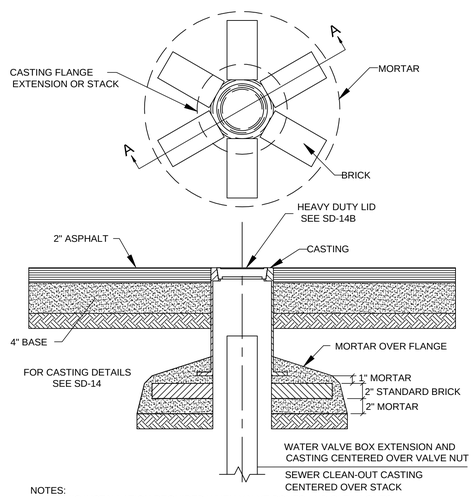

NOTES:
*THIS INSTALLATION REQUIRED WHEN VALVE BOXES AND CLEAN-OUTS ARE LOCATED IN PRESENT OR FUTURE PAVED AREAS.
*PRIOR TO SETTING CASTINGS, NEW INSTALLATIONS WILL REQUIRE 95% COMPACTION OR BACKFILL IN 6" LIFTS.

TYPICAL DETAIL VALVE BOX AND CLEAN-OUT CASTING BASES SD 15-02

NOT TO SCALE

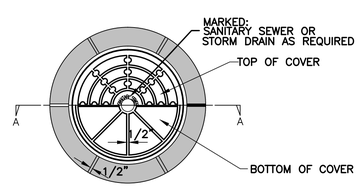

PLAN

NOTE:
RING & COVER CONTACT SURFACES SHALL BE MACHINED SO AS TO INSURE EVEN BEARING OF COVER ON RING

MINIMUM WEIGHTS:
RING 190 LBS.
COVER 120 LBS.

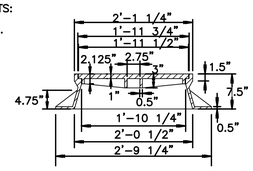

SECTION "A-A"

STANDARD MANHOLE RING AND COVER SD 14-01

NOT TO SCALE

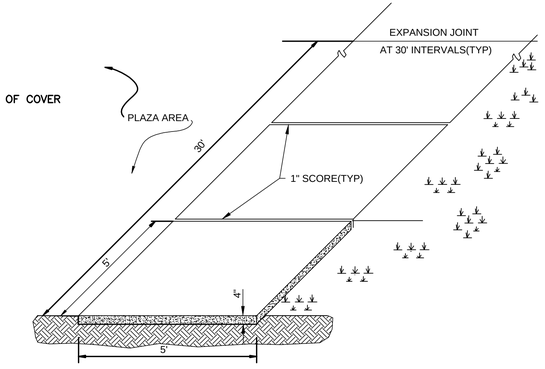

STANDARD SIDEWALK DETAIL

SD 8-15
NOT TO SCALE

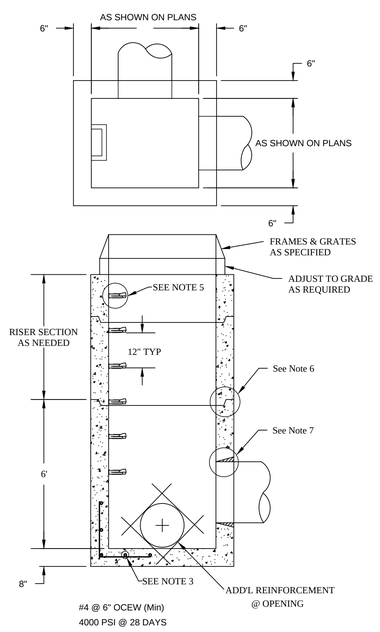

#4 @ 6" OCEW (Min)
4000 PSI @ 28 DAYS

General Notes: Precast Catch Basins

1. Precast Concrete Structures Shall Be In Accordance With NCDOT Section 1077 For "Precast Concrete Units" Of The Most Recent "Standards Specifications For Roads And Structures" And ASTM-C-913 For "Reinforced Concrete Water And Wastewater Structures".
2. Concrete Compressive Strength Shall Be 4000 PSI Minimum And Shall Meet The Requirements As Specified In NCDOT Section 1077.
3. Reinforcing Steel Shall Be Of Deformed Steel Bars Conforming To The Requirements Of ASTM-A-615, Grade 60, Or Welded Wire Fabric Conforming To The Requirement Of ASTM-A-82 Or Both.
4. Reinforcing Steel Design Shall Be According To C-890-78 For H-20-44 Loading.
5. Steps Required On Structures Over 42" Deep Shall Be Of Steel Reinforced Copolymer Polypropylene Plastic.
6. Section Joints Shall Be Sealed With Butyl Rubber Sealant Or NCDOT Approved Mortar At The Option Of The Contractor.
7. Pipe Connections Shall Be Sealed With Approved Mortar. NCDOT Approved Brick May Be Used In Conjuction With Mortar At The Contractors Option.
8. Lift Holes Shall Be Located As Required For Handling And Sealed After Installation With NCDOT Approved Mortar.

CONCRETE JUNCTION BOX

NOT TO SCALE

Approved Construction Plan

	Name	Date
Planning		
Traffic		
Fire		
CFPUA		

CITY OF WILMINGTON NORTH CAROLINA
Public Services • Engineering Division
APPROVED STORMWATER MANAGEMENT PLAN
Date:_____ Permit #_____
Signed: _____

NUMBER	DATE	REVISION
R1	7-26-16	RESUBMITTED TO TRC WITHOUT BUILDING

10/17/2016 3:14:35 PM

DESIGN BY: BDS
DRAWN BY: BDS
CHECKED BY: BDS
DATE: OCTOBER, 2016

JBS CONSULTING, PA
7332 Coleswarth Drive
Wilmington, NC 28045
(910) 619-9990
LICENSE NUMBER C-2525
PLANNING - ENGINEERING - PROJECT MANAGEMENT

NORTH CAROLINA PROFESSIONAL ENGINEER SEAL 026378 BRADFORD SEDGWICK

DETAILS

FIAT DISPLAY LOT
6421 MARKET STREET
WILMINGTON, NORTH CAROLINA

GILLILAN PROPERTIES, LLC
JOHN S. GILLILAN, AGENT
219 COLLEGE ROAD
WILMINGTON, NC 28406

SHEET C6 of 6

JOB NO. 032-011

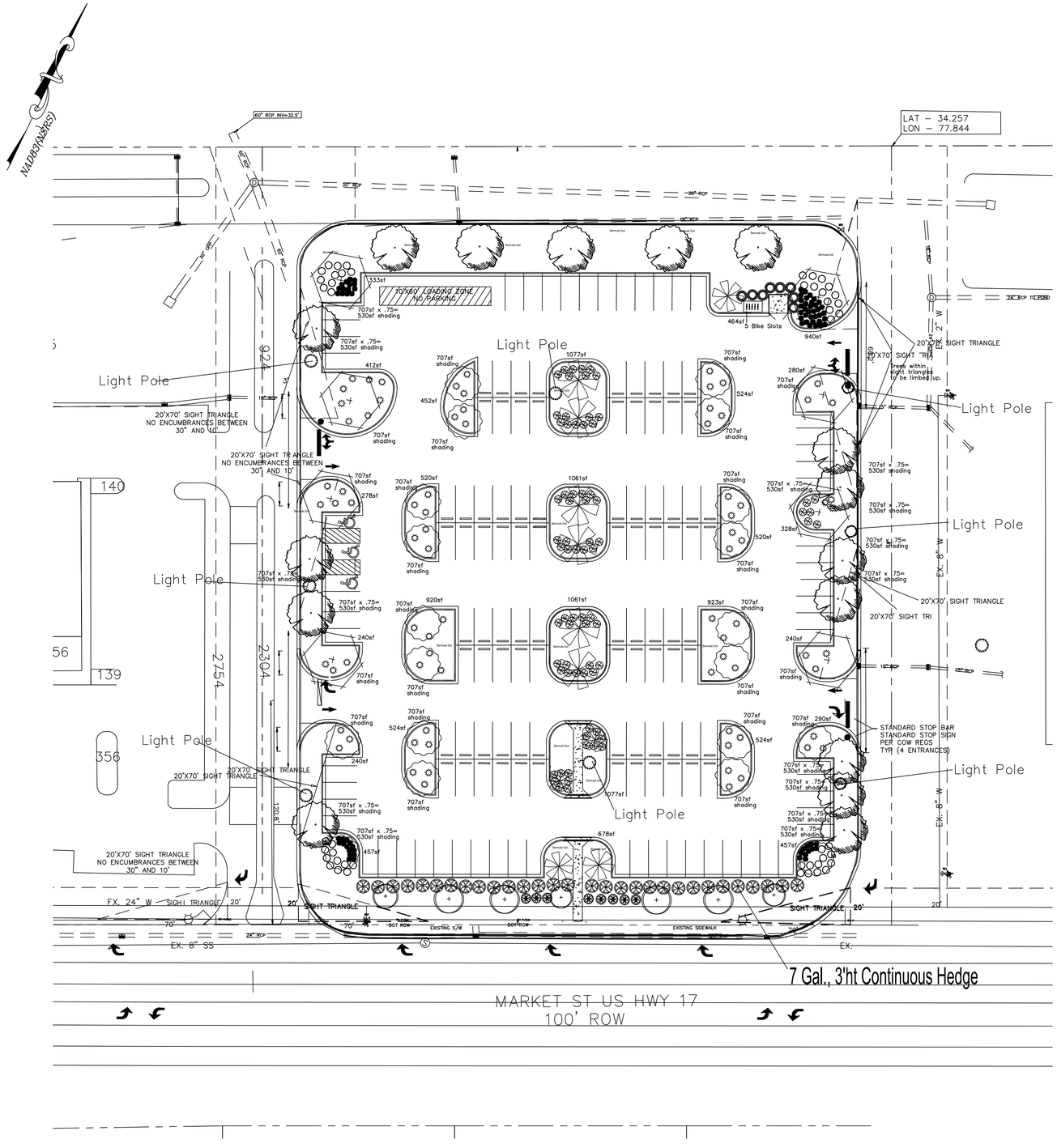

SITE DATA

ADDRESS ..... 6421 MARKET STREET
WILMINGTON, NC 28403

PARCEL ID NUMBERS R04300–007–037–000
DEED BOOK & PAGE ..... D.B. 5527 PG. 1251

MAP BOOK & PAGE..... MB 43 PG. 227
MB 47 PG. 241

ZONING ..... RB–REGIONAL BUSINESS
CITY OF WILMINGTON

TOTAL LOT AREA ..... 1.20 ACRES (6415)
2.06 ACRES (6421)
3.26 ACRES x 15 = 49 Trees 2" Caliper Req'd.

CAMA LAND USE CLASSIFICATION .. URBAN
NGLE
PROPOSED USE.....CAR DEALERSHIP/PARKING LOT

PAVEMENT/BUA CALCULATIONS FOR THE STORMWATER PERMT

PROJECT DRAINAGE BASINS

	BMP #1	BMP #2	BMP #3	TOTAL
TOTAL DRAINAGE AREA (SF)	181,139	144,582	53,918	379,639
TOTAL IMPERVIOUS				
BUILDINGS	19,343	23,097	0	42,440
IMPERVIOUS PAVEMENT	103,573	69,864	16,373	189,810
PERVIOUS PAVEMENT**	0	0	4,674	4,674
IMPERVIOUS S/W	3,024	0	1,674	4,698
FUTURE DEVELOPMENT	2,088	973	0	3,061
TOTALS	128,028	93,934	22,721	258,704

** 18,695 SF OF PERVIOUS CONCRETE W/ 75% CREDIT = 4,674 SF

EXISTING ON SITE	179,103 SF (TO REMAIN)	
PROPOSED		
ASPHALT	~~44,129 SF~~	57,845 SF
BUILDING	~~10,889 SF~~	
CONCRETE	~~2,827 SF~~	
PERMEABLE CONCRETE	18,695 SF	18,695 SF
TOTAL PROPOSED	76,540 SF	76,540 SF

	REQUIRED	PROPOSED
MIN. LOT AREA	1 ACRE	3.26 ACRES
MIN. LOT WIDTH	100'	339.01'
MAX. LOT COVERAGE	40%	7.9%
FRONT BUILDING SETBACK	50'	143.1'
REAR BUILDING SETBACK	15'	179.8'
SIDE BUILDING SETBACK	0'	
RIGHT SIDE		111.9'
LEFT SIDE		110.4'
MAX. BUILDING HEIGHT	35'	18.0'

ANGLE

PARKING REQUIREMENTS
TOTAL PROVIDED 147 SPACES / 15 = 10 Trees Req'd. & 59 Shrubs Req'd. in parking area.
35 Trees & 111 Shrubs Prov'd.

SOLID WASTE – SOLID WASTE DISPOSAL WILL BE BY DUMPSTER. DUMPSTER PAD IS LOCATED IN THE REAR RIGHT HAND SIDE OF THE PARKING LOT. THE DUMPSTER PAD WILL BE SCREENED WITH A CHAIN LINK FENCE WITH BUILDER SLIDES ON ALL SIDES.

RECEIVING STREAM	SMITH CREEK
RIVER BASIN	CAPE FEAR
STREAM INDEX NUMBER	CPF 17 18–74–63
WATER CLASSIFICATION	"C, Sw"

LANDSCAPE REQUIREMENTS

STREET YARD BUFFER

ZONING RB (MULTIPLIER = 25)
297' FRONTAGE * 25 = 7425 SF REQUIRED (7528 SF PROVIDED)
7528/600 = 12.5
13 CANOPY OR 38 UNDERSTORY TREES AND 75 – 12' SHRUBS

Using the creative standard portion of the code, 50% of the street yard landscape shall be required.

Creative Standard Requirements for Street Yard:
7 Trees 2.5" Cal. & 38 Shrubs 12" Ht.

PERIMETER LANDSCAPING

923' – 96' (DRIVEWAY) = 827'
10' MIN WIDTH (12 AVERAGE PROVIDED)
1 – TREE PER 18' (MAX) OR 27' (MIN)
46– TREES (MAX)
31 – TREES (MIN)

(76,540 SF X 20%) = 15,308 SF Shading Required
17675 SF Shading Provided

BUFFER YARD

NOT REQUIRED ON THIS PARCEL

Legend

Common Name	Size	Qty
Allee Elm	2.5"Cal.	8
Breeze Grass	2 Gal.	40
Crape Myrtle Tuscarora	8' Ht.	11
Holly, Yaupon, Dwarf	3 Gal.	47
Drift Rose	3 Gal.	71
Liriope, Big Blue	1 Gal.	73
Trident Maple	3"Cal.	16
Tulip Poplar Arnold	2.5"Cal.	7
Miscanthus Cosmopolitan	3 Gal.	8
Hornbeam Fastigata	2.5"Cal.	17
Japanese Yew	3 Gal.	8
Var Ligustrum	7 Gal., 3'ht	30

No encumberances between 30" and 10' height in sight triangles.

Prior to any clearing, grading or construction activity, tree protection fencing will be installed around protected trees or groves of trees. No construction workers, tools, materials or vehicles are permitted within the tree protection fencing.

Landscaping shall be complete before issuance of a C.O.

A rain/freeze sensor shall be used if there is an irrigation system.

All planted and retained living material required to meet the provisions of the City of Wilmington Land Development Code, shall be perpetually protected and maintained to professionally accepted standards by joint and several responsibility of the owner, tenant and respective agents of the property on which the material is located.

FIAT OF WILMINGTON
6415/6421 MARKET STREET
WILMINGTON, NORTH CAROLINA

G and G PROPERTIES 2, LLC
JOHN S. GILLILAN, AGENT
219 COLLEGE ROAD
WILMINGTON, NC 28406

jim@freemanlandscape.com

Approved Construction Plan

	Name	Date
Planning		
Traffic		
Fire		

CITY OF WILMINGTON NORTH CAROLINA
Public Services • Engineering Division
APPROVED STORMWATER MANAGEMENT PLAN
Date:_____ Permit #_____
Signed: _____

Revision #:5	Scale:	Landscape Plan:	Landscape Design by:James Freeman - NCLC #71
Date: 10/17/2016		Fiat of Wilmington Auto Lot	Freeman Landscape, Inc.

10/17/2016 3:14:40 PM

Statistics

Description	Symbol	Avg	Max	Min	Max/Min	Avg/Min
Entire Area	+	7.4 fc	19.7 fc	0.9 fc	21.9:1	8.2:1

Schedule

Symbol	Label	QTY	Catalog Number	Description	Lamp	Number Lamps	Lumens per Lamp	LLF	Wattage	Polar Plot
	A	2	GAN-AE-10-LED-U-SWQ	GALLEON LED AREA AND ROADWAY LUMINAIRE (10) 70 CRI, 4000K, 1A LIGHTSQUARES WITH 16 LEDS EACH AND TYPE V WIDE OPTICS ABSOLUTE PHOTOMETRY IS BASED ON CALIBRATION FACTORS CREATED USING LAB LUMEN STANDARDS IN GONIOPHOTOMETER WITH TEST DISTANCE OF 28.75 FEET		160	334	0.85	2112	Max: 21423cd
	B	6	GAN-AE-10-LED-U-SL4	GALLEON LED AREA AND ROADWAY LUMINAIRE (10) 70 CRI, 4000K, 1A LIGHTSQUARES WITH 16 LEDS EACH AND TYPE IV SPILL LIGHT ELIMINATOR OPTICS ABSOLUTE PHOTOMETRY IS BASED ON CALIBRATION FACTORS CREATED USING LAB LUMEN STANDARDS IN GONIOPHOTOMETER WITH TEST DISTANCE OF 28.75 FEET		160	302	0.85	1056	Max: 40538cd

Proprietary & Confidential
This document together with the concepts and designs presented herein, presented as an instrument of service, is the sole property of Duke Energy Progress , and is intended only for the specific purpose and prospective client as state in the title block of this drawing. Any use, copying, reproduction or disclosure of the drawing, design or information contained herein by the prospective customer or other entities, including without limitation, architects, engineers, or equipment manufacturers is hereby expressly prohibited and shall not be permitted absent prior written consent from, and payment of compensation to Duke Energy Progress . Duke Energy Progress disclaims any liability or
responsibility for any unauthorized use of or reliance on this document.
Signature
Date

ISOFOOTCANDLE CURVES

FIXTURE: LE3530, GALLEON TYPE V

LIGHT SOURCE: LED'S, 4030K
PATTERN: TYPE V, BS-U0-G5
(zero light at or above 90 degrees)
NOTE: THE FOOTCANDLE READINGS BELOW ARE MAINTAINED AND HAVE BEEN DEPRECIATED FOR LED LUMEN DEPRECIATION AND LUMINAIRE DIRT DEPRECIATION FOR 3%INITIAL FOOTCANDLES.

ASSY# L30KLED3530LMC (BLACK)
BRACKET ASSY# LBKT530LBC (BLACK)
FOR 1- 4 FIXTURES FOR SQUARE STEEL POLES ONLY
POLE ASSY# 19400703

IN LINE LIGHTING BRACKET FOR DOUBLE FIXTURES NOT AVAILABLE TO DATE

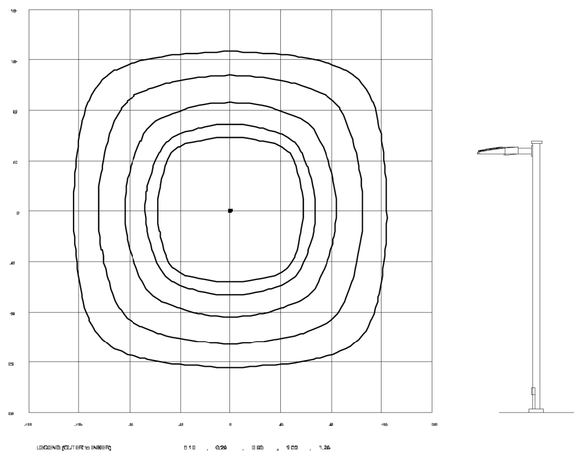

DIVIDE THE READINGS BELOW BY .85

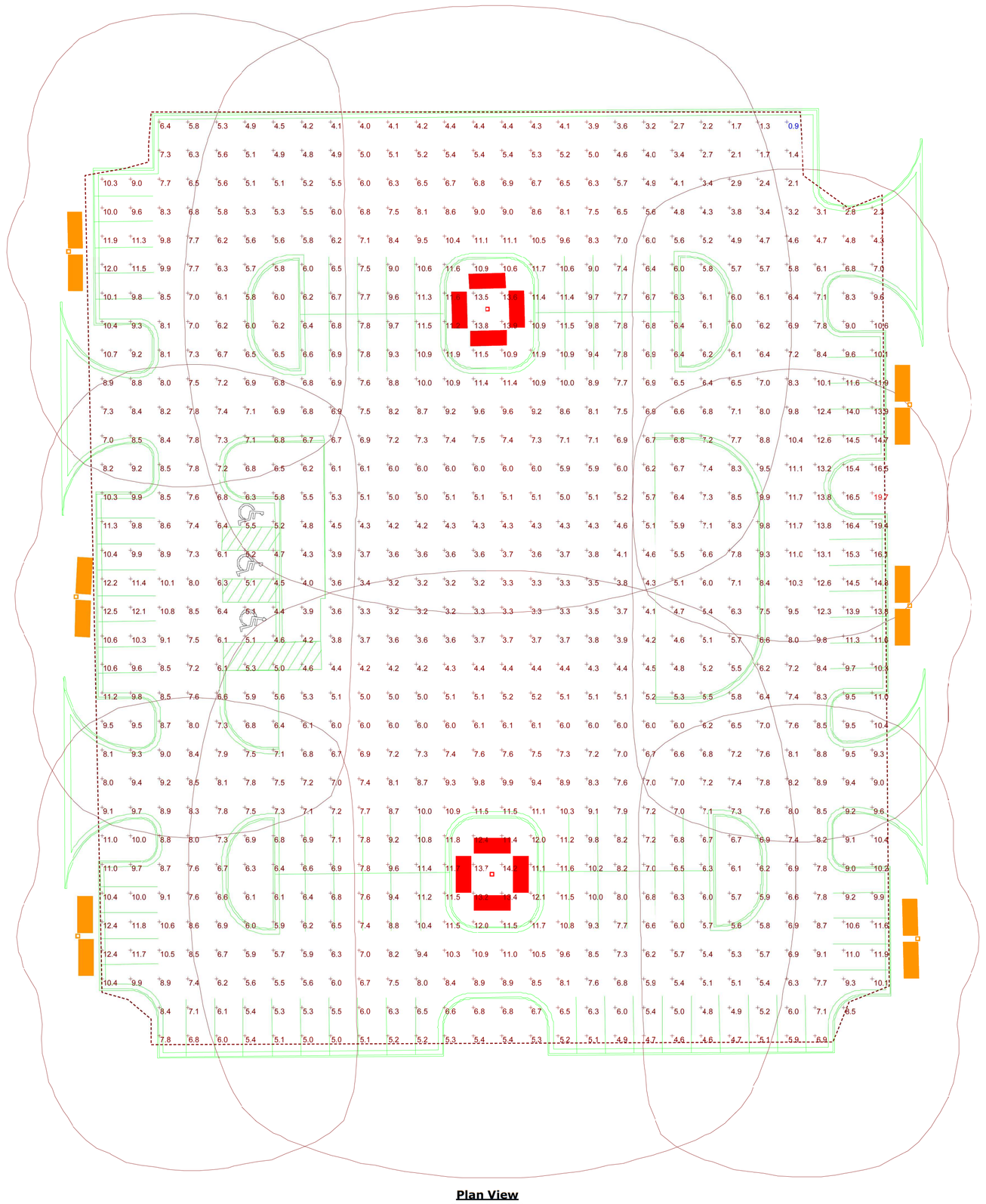

Plan View
Scale - 1" = 30ft

ISOFOOTCANDLE CURVES

FIXTURE: LE3530, GALLEON TYPE IV

LIGHT SOURCE: LED'S, 4000K
PATTERN: TYPE V, BS-U0-G5
(zero light at or above 90 degrees)
NOTE: THE FOOTCANDLE READINGS BELOW ARE MAINTAINED AND HAVE BEEN DEPRECIATED FOR LED LUMEN DEPRECIATION AND LUMINAIRE DIRT DEPRECIATION FOR 3%INITIAL FOOTCANDLES.

ASSY# L48KLE3530SBLMC (BLACK)
BRACKET ASSY# LBKT8UBLC (BLACK)
FOR 1- 4 FIXTURES FOR SQUARE STEEL POLES ONLY
POLE ASSY# 19400703

IN LINE LIGHTING BRACKET FOR DOUBLE FIXTURES NOT AVAILABLE TO DATE

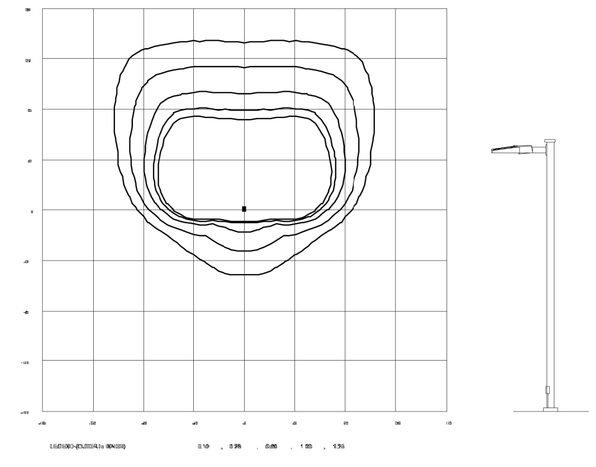

DIVIDE THE READINGS BELOW BY .85

DUKE ENERGY. PROGRESS

Wilmington Fiat

Designer
Thomas Bland, PE
Date
8/26/2016
Scale
1"=30'
Drawing No.

Summary