DUNGANNON VILLAGE
AUTUMN HALL

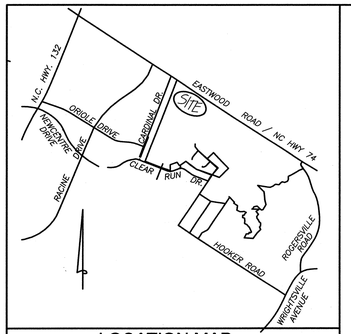

LOCATION MAP
NOT TO SCALE

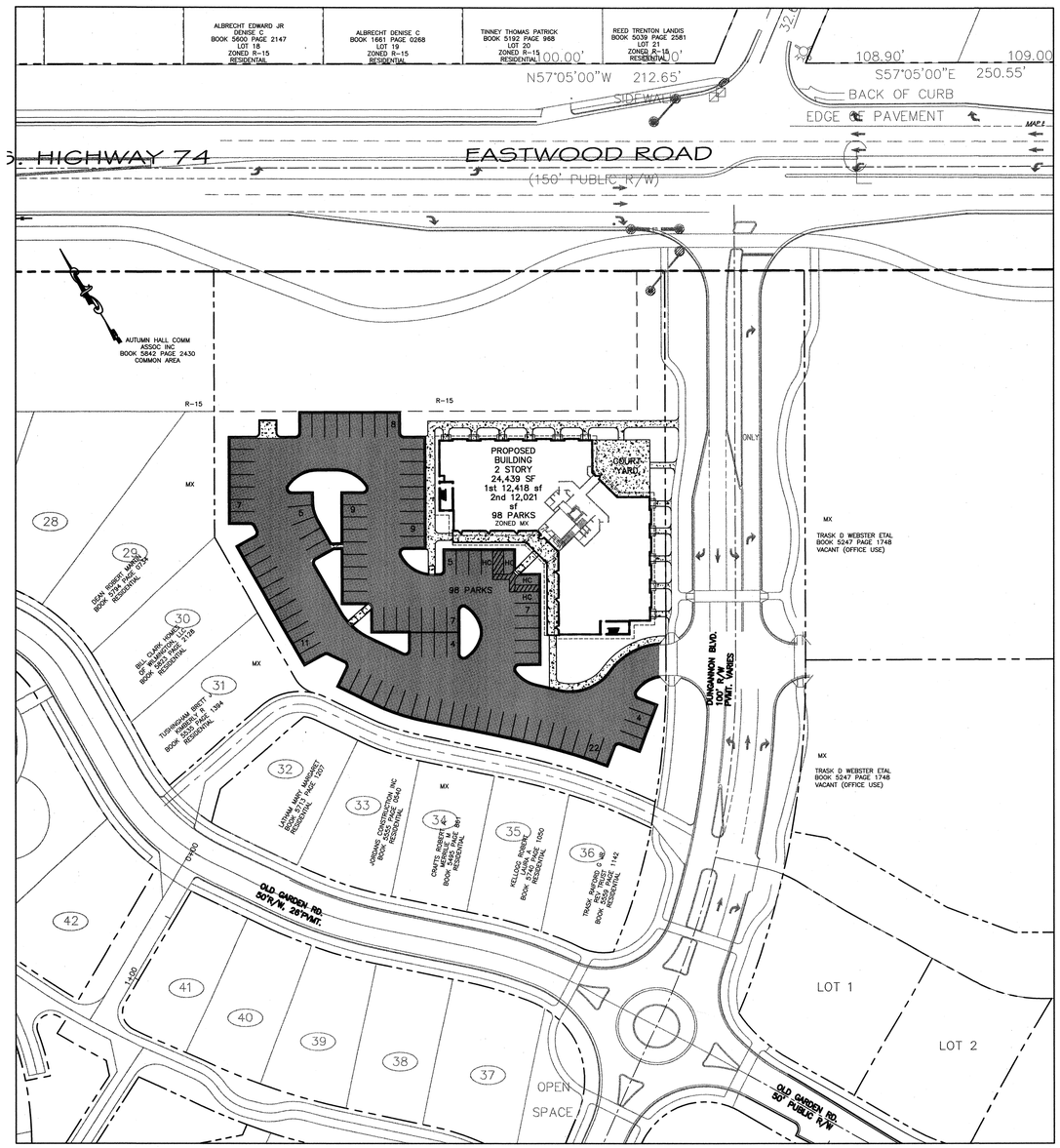

SCALE: 1" = 50'

SITE DATA TABLE

USE:	OFFICE/RETAIL
SITE AREA:	2.41 ACRES (105,107 SF)
PARCEL ID#:	R05000-004-080-000
MAP ID#:	314707.59.6962.000
ADDRESS:	110 DUNGANNON BLVD.
ZONING:	MX/R15/SHOD
CAMA LAND USE:	WATERSHED RESOURCE PROTECTION
BUILDING SETBACKS MX: (REQUIRED)	20' MIN. FROM MX BOUNDARY 50' MIN. FROM US AND NC HIGHWAYS AND MAJOR THOROUGHFARES INTERIOR: NO MINIMUM, WITHIN 10' OF INTERNAL STREET R/W PREFERED.
BUILDING SETBACKS: (PROPOSED)	20' FROM MX BOUNDARY NORTH 11' FROM ROW EAST 91.39' FROM P/L SOUTH 161' FROM P/L WEST
SHOD SETBACKS:	BUILDING: 100' INTERIOR SIDE: 20' PARKING: 50'
BUILDING:	
BUILDING COVERAGE:	15.22%
BUILDING HEIGHT:	32', 2 STORY
BUILDING CONSTRUCTION TYPE:	V-B
BUILDING SQUARE FOOTAGE:	12,418 SF (1ST FLOOR) 12,021 SF (2ND FLOOR) 24,439 SF TOTAL

PARKING REQUIREMENT MAXIMUM, NO MINUMUM REQUIREMENT IN MX ZONE

PARKING ALLOWED: OFFICE	1/200 SF MAX.
PARKING ALLOWED MAX.:	122 MAX.
TOTAL PROV'D:	98 SPACES
HC SPACES REQUIRED:	4 SPACES
HC SPACES PROVIDED:	4 SPACES

IMPERVIOUS AREA:

BUILDING:	16,000 SF (ROOF AREA)
ASPHALT, CONCRETE, CURB & GUTTER	37,000 SF
SIDEWALK:	3,950 SF
TOTAL:	56,950 SF
% SITE IMPERVIOUS AREA:	54.18%

LANDSCAPING: (SEE LANDSCAPE PLAN)

FOUNDATION PLANTINGS (12%):
WEST: 32' X 66' X .12 = 253 SF REQD.
FRONT: 32' X 140' X .12 = 537 SF REQD.
SOUTH: 32' X 66' X .12 = 253 SF REQD.
EAST: 32' X 90' X .12 = 345 SF REQD.

LANDSCAPING REQ'D INTERIOR (AS PER O&I REGULATIONS):
ASPHALT, CONCRETE, CURB & GUTTER 37,000 SF
30% SHADING REQUIRED

DISTURBED AREA: 1.74 ACRES

ALLOTTED IMPERVIOUS FOR THIS PARCEL = 85%
FROM PERMIT SW8 040333 MOD

LEGEND

	PROPERTY LINE/DISTURBED AREA LIMITS
	DISTURBED AREA LIMITS
TSF	TEMPORARY SILT FENCE
SD	PROPOSED STORMDRAIN PIPE
WV	PROPOSED WATERLINE
SS	PROPOSED SANITARY SEWER
x34.75	PROPOSED FINISH GRADE SPOT ELEVATION
	JUNCTION BOX WITH INLET PROTECTION (DI)
	DROP INLET WITH INLET PROTECTION (DI)
	CURB INLET WITH INLET PROTECTION (CI)
35	EXISTING CONTOUR
27'0	EXISTING TREE
TP	TREE PROTECTION FENCE
	NEW ASPHALT
	NEW CONCRETE/SIDEWALK

CITY OF WILMINGTON NORTH CAROLINA
Public Services • Engineering Division
APPROVED STORMWATER MANAGEMENT PLAN
Date:_____ Permit #_____
Signed: _____

Approved Construction Plan

	Name	Date
Planning		
Traffic		
Fire		

For each open utility cut of City streets, a $325 permit shall be required from the City prior to occupancy and/or project acceptance.

SYMBOL	DATE	DESCRIPTION	BY
		REVISIONS	

© 2014 NORRIS & TUNSTALL

OVERALL SITE PLAN
DUNGANNON VILLAGE
AUTUMN HALL
WILMINGTON, NORTH CAROLINA 28403

OWNER:
AUTUMN HALL DVC, LLC
1201 EASTWOOD ROAD
WILMINGTON, N.C. 28403
(910) 799-8755

NORRIS & TUNSTALL
CONSULTING ENGINEERS, INC.
902 MARKET STREET
WILMINGTON, NC, 28401
PHONE (910) 343-9653
FAX (910) 343-9604
licence #C-3641

14069

DES.	JST
CKD.	JPN
DRWN.	NKS
DATE	12/10/14

NORTH CAROLINA PROFESSIONAL ENGINEER SEAL 030869 JASON PAUL CLARK

C0

7:\Projects\2005\05150 Autumn Hall Mall-User\05150 Plans\dwg\05150.master.r26.dwg, 12/10/2014 9:54:29 AM

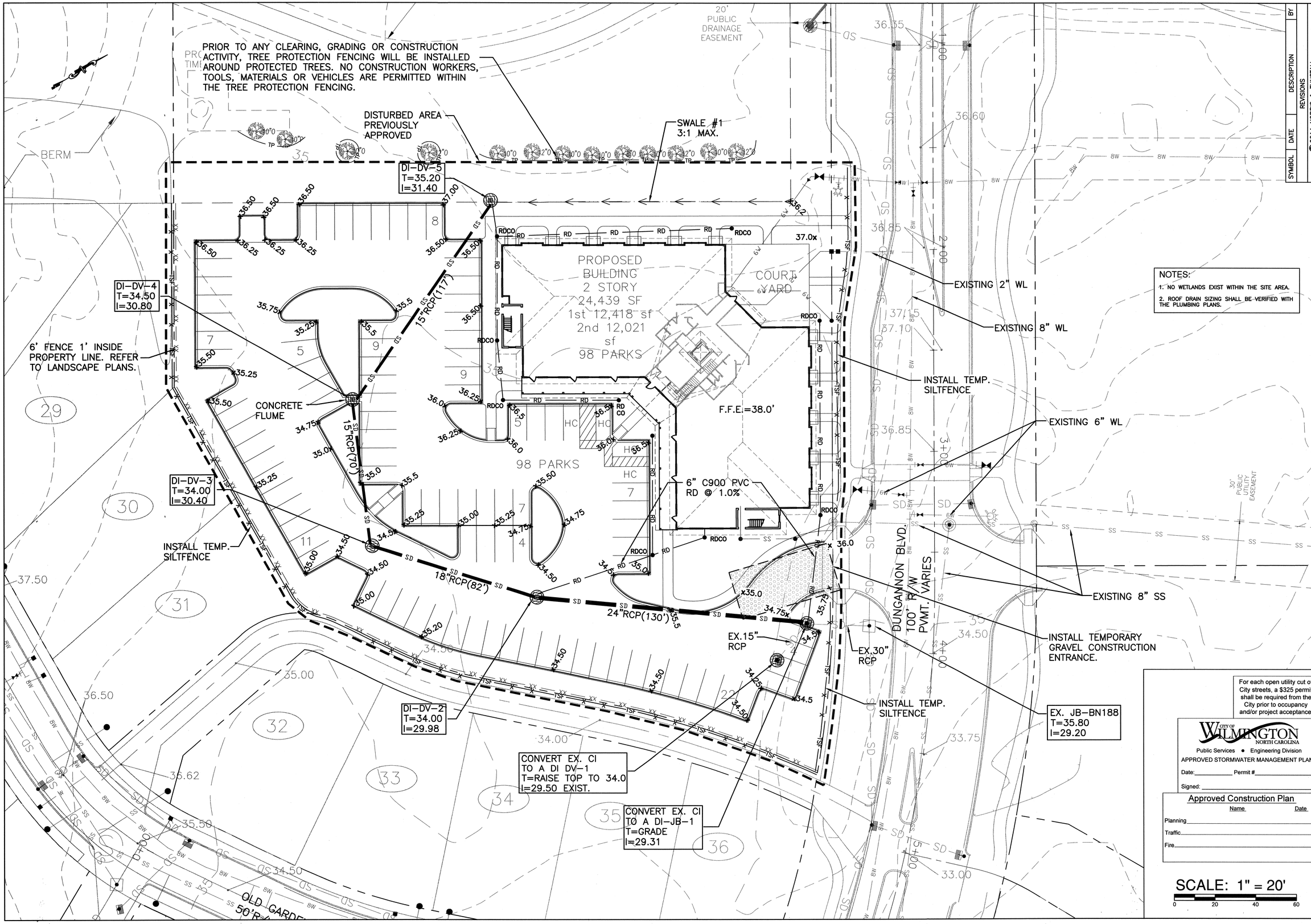

NOTES:
1. NO WETLANDS EXIST WITHIN THE SITE AREA.
2. ROOF DRAIN SIZING SHALL BE VERIFIED WITH THE PLUMBING PLANS.

For each open utility cut of City streets, a $325 permit shall be required from the City prior to occupancy and/or project acceptance.

CITY OF WILMINGTON NORTH CAROLINA
Public Services • Engineering Division
APPROVED STORMWATER MANAGEMENT PLAN
Date:_____ Permit #_____
Signed:_____

Approved Construction Plan

	Name	Date
Planning		
Traffic		
Fire		

SCALE: 1" = 20'
0 20 40 60

SYMBOL	DATE	DESCRIPTION	BY

REVISIONS
© 2014 NORRIS & TUNSTALL

GRADING, STORMWATER AND EROSION CONTROL PLAN
DUNGANNON VILLAGE
AUTUMN HALL
WILMINGTON, NORTH CAROLINA 28403

OWNER:
AUTUMN HALL DVC, LLC
1201 EASTWOOD ROAD
WILMINGTON, N.C. 28403
(910) 799-8755

NORRIS & TUNSTALL
CONSULTING ENGINEERS, INC.
902 MARKET STREET
WILMINGTON, NC, 28401
PHONE (910) 343-9653
FAX (910) 343-9604
licence #C-3641

14069

DES.	JST
CKD.	JPN
DRWN.	NKS
DATE	12/10/14

NORTH CAROLINA PROFESSIONAL SEAL 030869 ENGINEER T. JASON CLARK

C1

T:\Projects\2005\05150 Autumn Hall Muli-Use\05150 Plans\dwg\05150.master.r26.dwg, 12/11/2014 1:49:36 PM

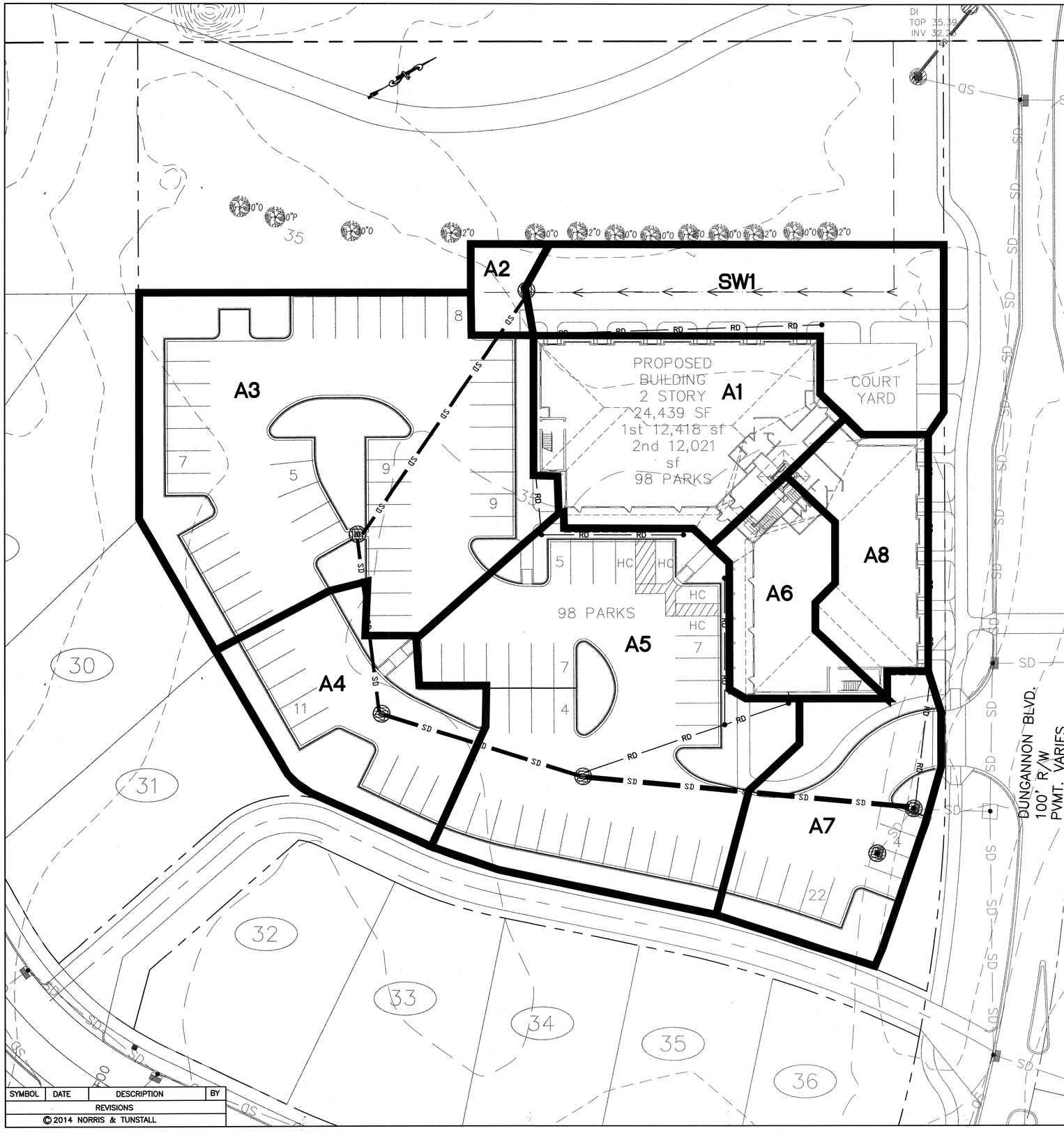

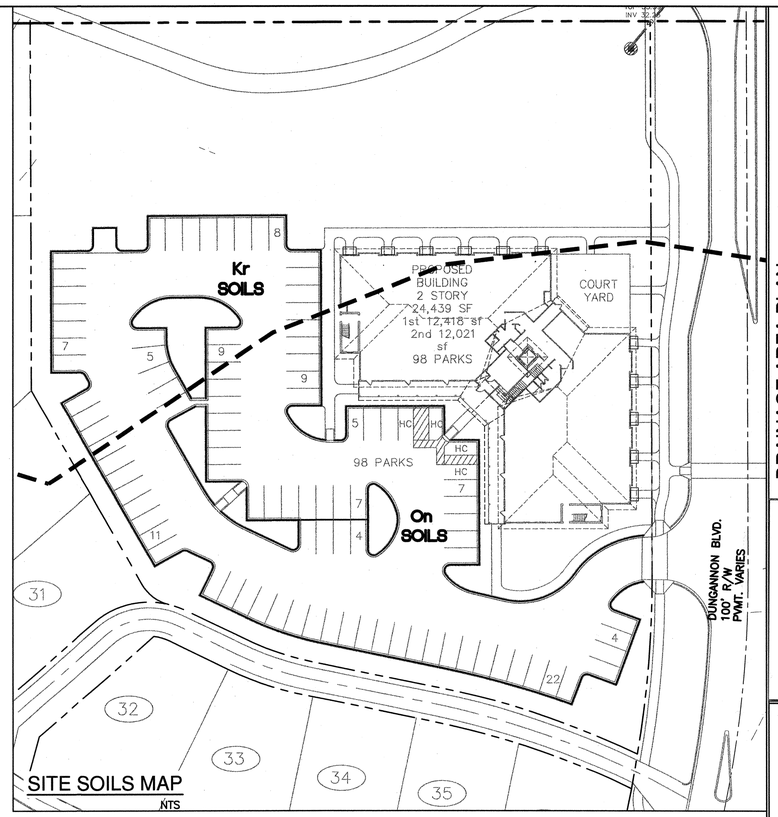

SITE SOILS MAP
NTS

DRAINAGE AREA SUMMARY

SW1	7,912 SF	2,340 SF IMP.
A1	8,225 SF	8,225 SF IMP.
A2	925 SF	46 SF IMP.
A3	19,583 SF	15,271 SF IMP.
A4	6,382 SF	4,086 SF IMP.
A5	16,460 SF	13,170 SF IMP.
A6	3,487 SF	3,487 SF IMP.
A7	6,906 SF	4,773 SF IMP.
A8	4,160 SF	4,160 SF IMP.
TOTAL		55,558 SF IMP. (1.275 AC)

NOTE: REMAINING 1,392 SF IMPERVIOUS WILL SHEET FLOW TO DUNGANNON BLVD. AND IS CONVEYED TO THE SAME ULTIMATE OUTLET AT STORMWATER POND B.

CITY OF WILMINGTON NORTH CAROLINA
Public Services • Engineering Division
APPROVED STORMWATER MANAGEMENT PLAN
Date:_____ Permit #_____
Signed: _____

Approved Construction Plan
Name Date
Planning_____
Traffic_____
Fire_____

For each open utility cut of City streets, a $325 permit shall be required from the City prior to occupancy and/or project acceptance.

SCALE: 1" = 20'
0 20 40 60

SYMBOL	DATE	DESCRIPTION	BY
REVISIONS			

© 2014 NORRIS & TUNSTALL

DRAINAGE AREA PLAN
DUNGANNON VILLAGE
AUTUMN HALL
WILMINGTON, NORTH CAROLINA 28403

OWNER:
AUTUMN HALL DVC, LLC
1201 EASTWOOD ROAD
WILMINGTON, N.C. 28403
(910) 799-8755

NORRIS & TUNSTALL
CONSULTING ENGINEERS, INC.
902 MARKET STREET
WILMINGTON, NC, 28401
PHONE (910) 343-9653
FAX (910) 343-9604
licence #C-3641

14069

DES. JST
CKD. JPN
DRWN. NKS
DATE 12/10/14

NORTH CAROLINA PROFESSIONAL SEAL 030969 ENGINEER JASON CLARK 12/11/2014

C1.1

F:\Projects\2005\05150 Autumn Hall Multi-Use\05150 Plans\dwg\05150.master.r26.dwg, 12/11/2014 1:51:08 PM

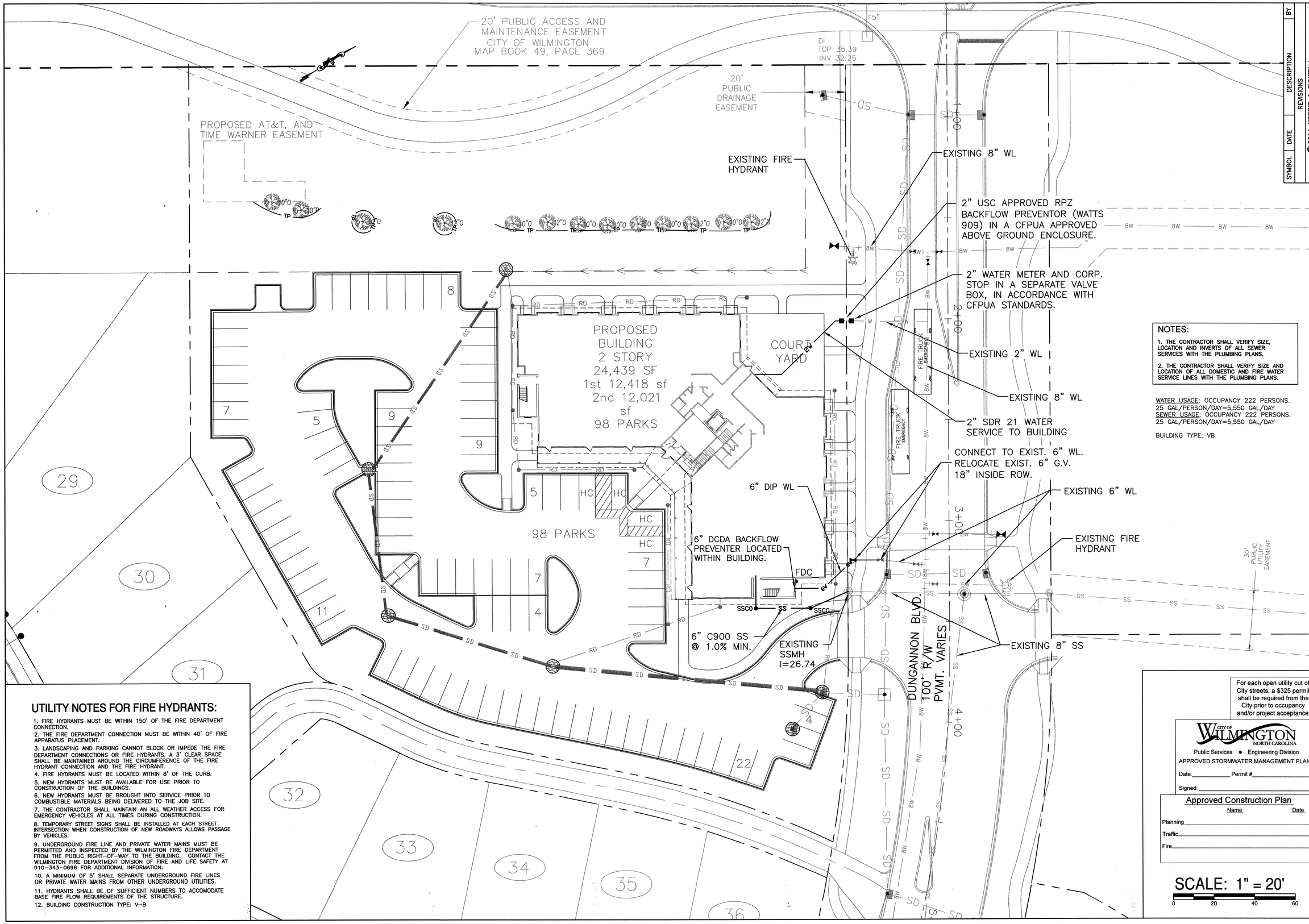

UTILITY NOTES FOR FIRE HYDRANTS:

1. FIRE HYDRANTS MUST BE WITHIN 150' OF THE FIRE DEPARTMENT CONNECTION.
2. THE FIRE DEPARTMENT CONNECTION MUST BE WITHIN 40' OF FIRE APPARATUS PLACEMENT.
3. LANDSCAPING AND PARKING CANNOT BLOCK OR IMPEDE THE FIRE DEPARTMENT CONNECTIONS OR FIRE HYDRANTS. A 3' CLEAR SPACE SHALL BE MAINTAINED AROUND THE CIRCUMFERENCE OF THE FIRE HYDRANT CONNECTION AND THE FIRE HYDRANT.
4. FIRE HYDRANTS MUST BE LOCATED WITHIN 8' OF THE CURB.
5. NEW HYDRANTS MUST BE AVAILABLE FOR USE PRIOR TO CONSTRUCTION OF THE BUILDINGS.
6. NEW HYDRANTS MUST BE BROUGHT INTO SERVICE PRIOR TO COMBUSTIBLE MATERIALS BEING DELIVERED TO THE JOB SITE.
7. THE CONTRACTOR SHALL MAINTAIN AN ALL WEATHER ACCESS FOR EMERGENCY VEHICLES AT ALL TIMES DURING CONSTRUCTION.
8. TEMPORARY STREET SIGNS SHALL BE INSTALLED AT EACH STREET INTERSECTION WHEN CONSTRUCTION OF NEW ROADWAYS ALLOWS PASSAGE BY VEHICLES.
9. UNDERGROUND FIRE LINE AND PRIVATE WATER MAINS MUST BE PERMITTED AND INSPECTED BY THE WILMINGTON FIRE DEPARTMENT FROM THE PUBLIC RIGHT-OF-WAY TO THE BUILDING. CONTACT THE WILMINGTON FIRE DEPARTMENT DIVISION OF FIRE AND LIFE SAFETY AT 910-343-0696 FOR ADDITIONAL INFORMATION.
10. A MINIMUM OF 5' SHALL SEPARATE UNDERGROUND FIRE LINES OR PRIVATE WATER MAINS FROM OTHER UNDERGROUND UTILITIES.
11. HYDRANTS SHALL BE OF SUFFICIENT NUMBERS TO ACCOMODATE BASE FIRE FLOW REQUIREMENTS OF THE STRUCTURE.
12. BUILDING CONSTRUCTION TYPE: V-B

NOTES:

1. THE CONTRACTOR SHALL VERIFY SIZE, LOCATION AND INVERTS OF ALL SEWER SERVICES WITH THE PLUMBING PLANS.
2. THE CONTRACTOR SHALL VERIFY SIZE AND LOCATION OF ALL DOMESTIC AND FIRE WATER SERVICE LINES WITH THE PLUMBING PLANS.

WATER USAGE: OCCUPANCY 222 PERSONS. 25 GAL/PERSON/DAY=5,550 GAL/DAY
SEWER USAGE: OCCUPANCY 222 PERSONS. 25 GAL/PERSON/DAY=5,550 GAL/DAY

BUILDING TYPE: VB

For each open utility cut of City streets, a $325 permit shall be required from the City prior to occupancy and/or project acceptance.

CITY OF WILMINGTON NORTH CAROLINA
Public Services • Engineering Division
APPROVED STORMWATER MANAGEMENT PLAN
Date:_____ Permit #_____
Signed:_____

Approved Construction Plan

	Name	Date
Planning		
Traffic		
Fire		

SCALE: 1" = 20'
0 20 40 60

SYMBOL	DATE	DESCRIPTION	BY

REVISIONS
© 2014 NORRIS & TUNSTALL

UTILITY PLAN
DUNGANNON VILLAGE
AUTUMN HALL
WILMINGTON, NORTH CAROLINA 28403

OWNER:
AUTUMN HALL DVC, LLC
1201 EASTWOOD ROAD
WILMINGTON, N.C. 28403
(910) 799-8755

NORRIS & TUNSTALL
CONSULTING ENGINEERS, INC.
902 MARKET STREET
WILMINGTON, NC, 28401
PHONE (910) 343-9653
FAX (910) 343-9604
licence #C-3641

14069

DES.	JST
CKD.	JPN
DRWN.	NKS
DATE	3/26/15

NORTH CAROLINA PROFESSIONAL SEAL 030869 ENGINEER T. JASON CLARK

C2

ALBRECHT EDWARD JR
DENISE C
BOOK 5600 PAGE 2147
LOT 18
ZONED R-15
RESIDENTAIL

ALBRECHT DENISE C
BOOK 1661 PAGE 0268
LOT 19
ZONED R-15
RESIDENTIAL

TINNEY THOMAS PATRICK
BOOK 5192 PAGE 968
LOT 20
ZONED R-15
RESIDENTIAL

REED TRENTON LANDIS
BOOK 5039 PAGE 2581
LOT 21
ZONED R-15
RESIDENTIAL

N57°05'00"W 212.65'
SIDEWALK
108.90' 109.00'
S57°05'00"E 250.55'
BACK OF CURB
EDGE OF PAVEMENT
WINDEMERE
SECTION 1
MAP BOOK 9, PAGE 33

U.S. HIGHWAY 74
EASTWOOD ROAD
(150' PUBLIC R/W)

20' PUBLIC ACCESS AND MAINTENANCE EASEMENT
CITY OF WILMINGTON
MAP BOOK 49, PAGE 369
S57°20'48"E
48.46' 162.43' 45.74'
20' PUBLIC DRAINAGE EASEMENT
66.54'
PROPOSED AT&T, AND TIME WARNER EASEMENT
AUTUMN HALL COMM ASSOC INC
BOOK 5842 PAGE 2430
COMMON AREA
N32°39'12"E 101.00'(TOTAL)
98.30'
SIDEWALK 100'
EXISTING MUP
ZONING LINE
CONCRETE DUMPSTER AREA SCREENED IN ACCORDANCE WITH COW STANDARDS.
R15
R15
MX
12X25 LOADING AREA
690
PROPOSED BUILDING
2 STORY
24,439 SF
1st 12,418 sf
2nd 12,021 sf
98 PARKS
COURT YARD
290.09'
ADA RAMP
ADA RAMP
HC SIGNS, TYPICAL.
BICYCLE PARKING (5) MIN.
98 PARKS
6' FENCE 1' INSIDE PROPERTY LINE. REFER TO LANDSCAPE PLANS.
CONCRETE FLUME. SEE DETAIL.
18" CONCRETE CURB AND GUTTER, TYP.
DEAN ROBERT MARTIN
BOOK 5794 PAGE 0734
RESIDENTIAL
BILL CLARK HOMES OF WILMINGTON, LLC
BOOK 5829 PAGE 2128
RESIDENTIAL
TUSHINGHAM BRETT J
KIMBERLY R
BOOK 5535 PAGE 1394
RESIDENTIAL
ARBOR PARK
EXISTING SIDEWALK
PROPOSED PAVEMENT MARKING
EXISTING ADA ACCESSIBLE RAMPS AND CROSS WALK
STOP SIGN
20X70 SIGHT TRIANGLE, TYP.
DUNCANNON BLVD.
100' R/W
PVMT. VARIES
PROPOSED PAVEMENT MARKING
ONLY
20' PUBLIC UTILITY EASEMENT
20' PUBLIC UTILITY EASEMENT
30' PUBLIC UTILITY EASEMENT
MX
TRASK D WEBSTER ETAL
BOOK 5247 PAGE 1748
VACANT (OFFICE USE)
MX
TRASK D WEBSTER ETAL
BOOK 5247 PAGE 1748
VACANT (OFFICE USE)
LATHAM MARY MARGARET
BOOK 5713 PAGE 1207
RESIDENTIAL
JORDANS CONSTRUCTION INC
BOOK 5555 PAGE 0340
RESIDENTIAL
CRAFTS ROBERT A
MERRILLE M
BOOK 5495 PAGE 861
RESIDENTIAL
KELLOGG ROBERT
LAURA A
BOOK 5740 PAGE 1050
RESIDENTIAL
TRASK RAIFORD G JR
REV TRUST
BOOK 5569 PAGE 1142
RESIDENTIAL
OLD GARDEN RD.
50'R/W, 26'PVMT.

NOTES:
1. TACTILE WARNING MATS ARE TO BE INSTALLED ON ALL WHEELCHAIR RAMPS.
2. ALL PROPOSED VEGETATION WITHIN THE SIGHT TRIANGLES SHALL NOT INTERFERE WITH VISUAL SIGHT LINES FROM 30" - 10'.

For each open utility cut of City streets, a $325 permit shall be required from the City prior to occupancy and/or project acceptance.

CITY OF WILMINGTON NORTH CAROLINA
Public Services • Engineering Division
APPROVED STORMWATER MANAGEMENT PLAN
Date:_____ Permit #_____
Signed: _____

Approved Construction Plan
Name Date
Planning_____
Traffic_____
Fire_____

SCALE: 1" = 30'
0 30 60 90

SYMBOL	DATE	DESCRIPTION	BY
		REVISIONS	

©2014 NORRIS & TUNSTALL

LAYOUT PLAN
DUNGANNON VILLAGE
AUTUMN HALL
WILMINGTON, NORTH CAROLINA 28403

OWNER:
AUTUMN HALL DVC, LLC
1201 EASTWOOD ROAD
WILMINGTON, N.C. 28403
(910) 799-8755

NORRIS & TUNSTALL
CONSULTING ENGINEERS, INC.
902 MARKET STREET
WILMINGTON, NC, 28401
PHONE (910) 343-9653
FAX (910) 343-9604
licence #C-3641

14069

DES.	JST
CKD.	JPN
DRWN.	NKS
DATE	12/10/14

NORTH CAROLINA PROFESSIONAL ENGINEER SEAL 030969 JASON CLARK

C3

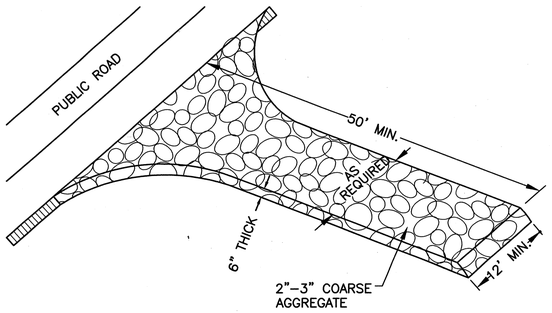

NOT TO SCALE

1 TEMPORARY GRAVELLED CONSTRUCTION ENTRANCE

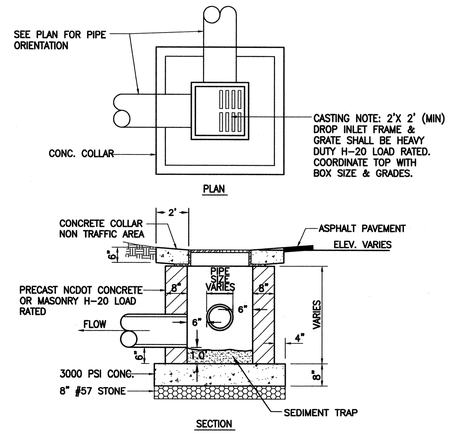

MUST COMPLY WITH CITY OF WILMINGTON STANDARDS

NOT TO SCALE

2 DROP INLET DETAIL

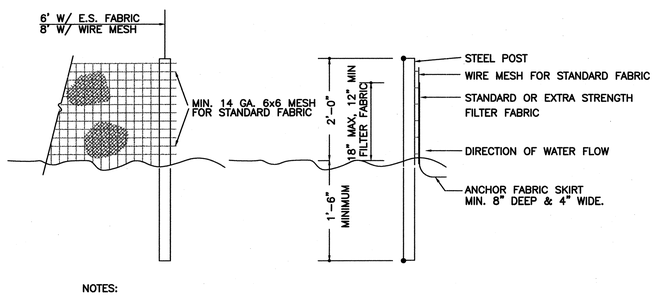

NOTES:

1. SYN. FENCE FABRIC SHALL BE MIN. OF 30" IN WIDTH WITH 30 LB/IN TENSILE STRENGTH FOR STANDARD FABRIC AND 50 LB/IN FOR EXTRA STRENGTH.
2. FABRIC SHALL BE CONTINUOUS LENGTH. IF JOINTS ARE NECESSARY, LAP FABRIC POST TO POST.
3. STEEL POST SHALL BE MIN 4' IN HEIGHT AND BE OF THE SELF-FASTENER STEEL ANGLE TYPE.

NOT TO SCALE

3 TEMPORARY SILT FENCE

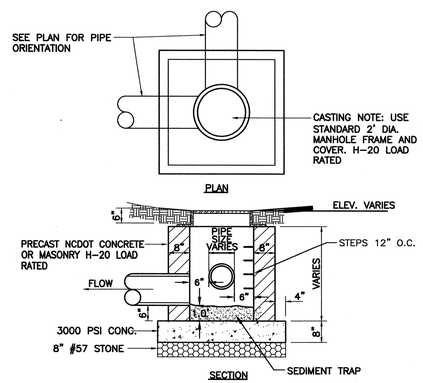

MUST COMPLY WITH CITY OF WILMINGTON STANDARDS

4 JUNCTION BOX DETAIL

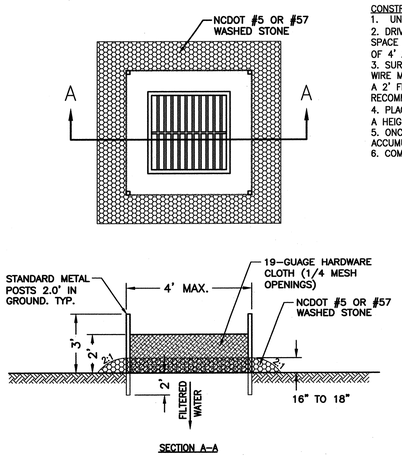

CONSTRUCTION SEQUENCE:

1. UNIFORMLY GRADE A SHALLOW DEPRESSION APPROACHING THE INLET.
2. DRIVE 5' STEEL POST 2' INTO THE GROUND SURROUNDING THE INLET. SPACE POST EVENLY AROUND THE PERIMETER OF THE INLET, A MAXIMUM OF 4' APART.
3. SURROUND THE POST WITH WIRE MESH HARDWARE CLOTH. SECURE THE WIRE MESH TO THE STEEL POST AT THE TOP, MIDDLE AND BOTTOM. PLACING A 2' FLAP OF THE WIRE MESH UNDER THE GRAVEL FOR ANCHORING IS RECOMMENDED.
4. PLACE CLEAN GRAVEL (NCDOT #5 OR #57 STONE) ON A 2:1 SLOPE WITH A HEIGHT OF 16" AROUND THE WIRE, AND SMOOTH TO AN EVEN GRADE.
5. ONCE THE CONTRIBUTING DRAINAGE AREA HAS BEEN STABILIZED, REMOVE ACCUMULATED SEDIMENT, AND ESTABLISH FINAL GRADING ELEVATIONS.
6. COMPACT THE AREA PROPERLY AND STABILIZE IT WITH GROUNDCOVER.

MAINTENANCE:

INSPECT INLETS AT LEAST WEEKLY AND AFTER EACH SIGNIFICANT (1/2 INCH OR GREATER) RAINFALL EVENT. CLEAR THE MESH WIRE OF ANY DEBRIS OR OTHER OBJECTS TO PROVIDE ADEQUATE FLOW FOR SUBSEQUENT RAINS. TAKE CARE NOT TO DAMAGE OR UNDERCUT THE WIRE MESH DURING SEDIMENT REMOVAL. REMOVE SEDIMENT WHEN ACCUMULATION REACHES HALF THE DEPTH OF ROCK. REPLACE STONE WHEN IT NO LONGER DRAINS AS DESIGNED.

NOT TO SCALE

5 HARDWARE CLOTH AND GRAVEL INLET PROTECTION

NOT TO SCALE

6 TYPICAL GRASS SWALE

EROSION CONTROL NOTES AND MAINTENANCE PLAN:

1. ALL EROSION AND SEDIMENT CONTROL MEASURES WILL BE CHECKED FOR STABILITY AND OPERATION FOLLOWING EVERY RUNOFF-PRODUCING RAINFALL, BUT IN NO CASE, LESS THAN ONCE EVERY WEEK AND WITHIN 24 HOURS OF EVERY HALF-INCH RAINFALL.

2. ALL POINTS OF EGRESS WILL HAVE CONSTRUCTION ENTRANCES THAT WILL BE PERIODICALLY TOP-DRESSED WITH AN ADDITIONAL 2 INCHES OF #4 STONE TO MAINTAIN PROPER DEPTH. THEY WILL BE MAINTAINED IN A CONDITION TO PREVENT MUD OR SEDIMENT FROM LEAVING THE SITE. IMMEDIATELY REMOVE OBJECTIONABLE MATERIAL SPILLED WASHED OR TRACKED ONTO THE CONSTRUCTION ENTRANCE OR ROADWAYS.

3. SEDIMENT WILL BE REMOVED FROM HARDWARE CLOTH AND GRAVEL INLET PROTECTION, BLOCK AND GRAVEL INLET PROTECTION, ROCK DOUGHNUT INLET PROTECTION AND ROCK PIPE INLET PROTECTION WHEN THE DESIGNED STORAGE CAPACITY HAS BEEN HALF FILLED WITH SEDIMENT. ROCK WILL BE CLEANED OR REPLACED WHEN THE SEDIMENT POOL NO LONGER DRAINS AS DESIGNED. DEBRIS WILL BE REMOVED FROM THE ROCK AND HARDWARE CLOTH TO ALLOW PROPER DRAINAGE. SILT SACKS WILL BE EMPTIED ONCE A WEEK AND AFTER EVERY RAIN EVENT. SEDIMENT WILL BE REMOVED FROM AROUND WATTLES, BEAVER DAMS, DANDY SACKS AND SOCKS ONCE A WEEK AND AFTER EVERY RAIN EVENT.

4. DIVERSION DITCHES WILL BE CLEANED OUT IMMEDIATELY TO REMOVE SEDIMENT OR OBSTRUCTIONS FROM THE FLOW AREA. THE DIVERSION RIDGES WILL ALSO BE REPAIRED. SWALES MUST BE TEMPORARILY STABILIZED WITHIN 21 CALENDAR DAYS OF CEASE OF ANY PHASE OF ACTIVITY ASSOCIATED WITH A SWALE.

5. SEDIMENT WILL BE REMOVED FROM BEHIND THE SEDIMENT FENCE WHEN IT BECOMES HALF FILLED. THE SEDIMENT FENCE WILL BE REPAIRED AS NECESSARY TO MAINTAIN A BARRIER. STAKES MUST BE STEEL. STAKE SPACING WILL BE 6 FEET MAX. WITH THE USE OF EXTRA STRENGTH FABRIC, WITHOUT WIRE BACKING. STAKE SPACING WILL BE 8 FEET MAX. WHEN STANDARD STRENGTH FABRIC AND WIRE BACKING ARE USED. IF ROCK FILTERS ARE DESIGNED AT LOW POINTS IN THE SEDIMENT FENCE, THE ROCK WILL BE REPAIRED OR REPLACED IF IT BECOMES HALF-FULL OF SEDIMENT, NO LONGER DRAINS AS DESIGNED OR IS DAMAGED.

6. SEDIMENT WILL BE REMOVED FROM SEDIMENT TRAPS WHEN THE DESIGNED STORAGE CAPACITY HAS BEEN HALF FILLED WITH SEDIMENT. THE ROCK WILL BE CLEANED OR REPLACED WHEN THE SEDIMENT POOL NO LONGER DRAINS OR WHEN THE ROCK IS DISLODGED. BAFFLES WILL BE REPAIRED OR REPLACED IF THEY COLLAPSE, TEAR, DECOMPOSE OR BECOME INEFFECTIVE. THEY WILL BE REPLACED PROMPTLY. SEDIMENT WILL BE REMOVED WHEN DEPOSITS REACH HALF THE HEIGHT OF THE 1ST BAFFLE. FLOATING SKIMMERS WILL BE INSPECTED AND KEPT CLEAN WEEKLY.

7. SEDIMENT WILL BE REMOVED FROM THE SEDIMENT BASIN WHEN THE DESIGN STORAGE CAPACITY HAS BEEN HALF FILLED WITH SEDIMENT. ROCK WILL BE CLEANED OR REPLACED WHEN THE SEDIMENT POOL NO LONGER DRAINS OR IF THE ROCK IS DISLODGED. BAFFLES WILL BE REPAIRED OR REPLACED IF THEY COLLAPSE, TEAR, DECOMPOSE OR BECOME INEFFECTIVE. THEY WILL BE REPLACED PROMPTLY. SEDIMENT WILL BE REMOVED FROM BAFFLES WHEN DEPOSITS REACH HALF THE HEIGHT OF THE 1ST BAFFLE. FLOATING SKIMMERS WILL BE INSPECTED WEEKLY AND WILL BE KEPT CLEAN.

8. LAND QUALITY REQUIRES:
ALL SEEDED AREAS WILL BE FERTILIZED, RESEEDED AS NECESSARY, AND MULCHED, ACCORDING TO SPECIFICATIONS IN THE VEGETATIVE PLAN, TO MAINTAIN A VIGOROUS, DENSE VEGETATIVE COVER. ALL SLOPES WILL BE STABILIZED WITHIN 21 CALENDAR DAYS. ALL OTHER AREAS WILL BE STABILIZED WITHIN 15 WORKING DAYS.
WATER QUALITY REQUIRES:
ALL SEEDED AREAS WILL BE FERTILIZED, RESEEDED AS NECESSARY AND MULCHED ACCORDING TO SPECIFICATIONS IN THE VEGETATIVE PLAN TO MAINTAIN A VIGOROUS, DENSE VEGETATIVE COVER. ALL PERIMETER DIKES, SWALES, DITCHES, PERIMETER SLOPES, ALL SLOPES STEEPER THAN 3' HORIZONTAL TO 1' VERTICAL (3:1) AND ALL HIGH QUALITY WATER (HQW) ZONES SHALL BE PROVIDED TEMPORARY OR PERMANENT STABILIZATION WITH GROUND COVER AS SOON AS PRACTICABLE BUT IN ANY EVENT WITHIN SEVEN (7) CALENDAR DAYS FROM THE LAST LAND-DISTURBING ACTIVITY. ALL OTHER DISTURBED AREAS SHALL BE PROVIDED TEMPORARY OR PERMANENT STABILIZATION WITH GROUND COVER AS SOON AS PRACTICABLE BUT IN ANY EVENT WITHIN FOURTEEN (14) CALENDAR DAYS FROM THE LAST LAND-DISTURBING ACTIVITY.

9. FLOCCULANTS WILL BE USED TO ADDRESS TURBIDITY ISSUES. THE PUMPS, TANKS, HOSES AND INJECT SYSTEMS WILL BE CHECKED FOR PROBLEMS OR TURBID DISCHARGES DAILY.

10. BASIN OUTLET STRUCTURES AND SKIMMERS SHALL WITHDRAW WATER FROM THE SURFACE.

TEMPORARY/PERMANENT GRASS SPECIFICATION:

1. CHISEL COMPACTED AREAS AND SPREAD TOPSOIL 3 INCHES DEEP OVER ADVERSE SOIL CONDITIONS.

2. RIP THE ENTIRE AREA TO A 6 INCH DEPTH.

3. REMOVE ALL ROCKS, ROOTS AND OTHER OBSTRUCTIONS LEAVING SURFACES SMOOTH AND UNIFORM.

4. APPLY AGRICULTURAL LIME AND FERTILIZER UNIFORMLY AND MIX WITH SOIL.
LIME: 45 LBS. PER 1000 S.F.
PHOSPHOROUS: 20 LBS PER 1000 S.F.
FERTILIZER: 17 LBS. PER 1000 S.F.

5. CONTINUE TILLAGE UNTIL A WELL PULVERIZED, FIRM, UNIFORM SEED BED IS PREPARED 4-6 INCHES DEEP.

6. SEED ON A FRESHLY PREPARED SEED BED AND COVER SEED LIGHTLY. 2 - 3 LBS PER 1000 S.F. (SEE MIXTURE BELOW)

7. MULCH IMMEDIATELY AFTER SEEDING AND ANCHOR MULCH.
GRAIN STRAW & HAY AT 75 TO 100 LBS PER 1000 S.F.
WOOD CHIPS AT 500 LBS. PER 1000 S.F.
JUTE & MESH AS PER MANUFACTURER

8. ASPHALT FOR ANCHORING MULCH SHALL BE TYPE SS-1 EMULSION AND APPLIED AT A RATE OF 1000 GAL. PER ACRE FOR SLOPE STABILIZATION, AND 150 GAL. PER TON OF STRAW FOR ANCHORING STRAW.

9. INSPECT ALL SEEDED AREAS AND MAKE NECESSARY REPAIRS OR RESEED WITHIN THE PLANTING SEASON, IF POSSIBLE. IF GRASS STAND SHOULD BE OVER 60% DAMAGED, REESTABLISH FOLLOWING ORIGINAL LIME, FERTILIZER AND SEEDING RATES.

10. CONSULT CONSERVATION INSPECTOR ON MAINTENANCE, TREATMENT, AND FERTILIZATION AFTER PERMANENT COVER IS ESTABLISHED.

11. SEED FOR TEMPORARY AND PERMANENT APPLICATIONS SHALL BE:

20%	CARPET GRASS
28%	BERMUDA GRASS
20%	TURF FESCUE
10%	CREEPING RED FESCUE
20%	ANNUAL RYE GRAIN

*BERMUDA SEED SHALL BE HULLED FOR WARM WEATHER PLANTING. PURITY OF SEED SHALL BE A MIN. OF 98% AND GERMINATION SHALL BE A MIN. OF 85%.

ALL DISTURBED AREA SHALL BE SEEDED WITHIN 7-14 DAYS OF THE COMPLETION OF GRADING. SEE EROSION CONTROL AND MAINTENANCE NOTES. CONSULT CONSERVATION ENGINEER OR SOIL CONSERVATION SERVICE FOR ADDITIONAL INFORMATION CONCERNING OTHER ALTERNATIVES FOR VEGETATION OF DENUDED AREAS. THE ABOVE VEGETATION RATES ARE THOSE WHICH DO WELL UNDER LOCAL CONDITIONS, OTHER SEEDING SCHEDULES MAY BE POSSIBLE.

SITE WORK NOTES:

1. THE CONTRACTOR SHALL VISIT THE SITE TO BECOME FAMILIAR WITH FIELD CONSTRUCTION CONDITIONS.

2. CONTRACTOR SHALL COORDINATE WORK WITHIN NCDOT AND LOCAL RIGHT OF WAYS WITH PROPER AUTHORITIES AND SHALL MEET ANY REQUIREMENTS AS TO TRAFFIC CONTROL AND CONNECTION TO EXISTING STREETS.

3. CLEARING AND GRUBBING: REMOVE ALL TREES AS REQUIRED UNLESS OTHERWISE NOTED TO REMAIN, STUMPS, ROOTS, SHRUBBERY, ASPHALT, CONCRETE, STRUCTURES, BURIED UTILITIES, STORAGE TANKS, ETC. WITHIN LIMITS OF CONSTRUCTION.

4. STRIPPING: BEFORE EXCAVATING OR FILLING, REMOVE ALL TOPSOIL, WOOD, LEAVES, AND ANY OTHER UNSUITABLE MATERIAL.

5. MUCKING: REMOVE ANY SOFT, ORGANIC SILT MATERIALS AND EXISTING BURIED CONSTRUCTION DEBRIS AS REQUIRED AND FILL TO SUBGRADE ELEVATIONS WITH A CLEAN SELECT-FILL COMPACTED AS SPECIFIED.

6. DISPOSAL: CLEARED, GRUBBED, STRIPPED OR EXCAVATED SPOIL SHALL BE REMOVED FROM SITE AND DISPOSED OF IN ACCORDANCE WITH ALL APPLICABLE LOCAL AND STATE CODES.

7. BORROW MATERIAL: THE CONTRACTOR SHALL FURNISH BORROW MATERIAL REQUIRED FROM OFF SITE AND OBTAIN ALL REQUIRED PERMITS ASSOCIATED WITH BORROW OPERATIONS.

8. FILL AND COMPACTION: AFTER STRIPPING THOSE AREAS DESIGNATED TO RECEIVE FILL SHOULD BE PROOFROLLED. THE TOP 8" OF SUBGRADE SHALL BE COMPACTED TO AT LEAST 98% OF MAXIMUM DENSITY AT OPTIMUM MOISTURE CONTENT. ANY AREA WHICH PUMPS OR RUTS EXCESSIVELY SHOULD BE UNDERCUT AND REPLACED WITH A CLEAN, SILTY OR CLAYEY SAND HAVING A UNIFIED SOIL CLASSIFICATION OF SP, SM, OR SC. FILL MATERIAL 5" OUTSIDE OF BUILDING AREAS SHALL THEN BE PLACED IN LAYERS NOT TO EXCEED 8" AND COMPACTED TO AT LEAST 95% OF THE STANDARD PROCTOR MAXIMUM DRY DENSITY (ASTM D-698) WITH THE UPPER 12 INCHES OF SUBGRADE BEING COMPACTED TO 98% OF THE STANDARD PROCTOR MAXIMUM DRY DENSITY. FILL MATERIALS WITHIN BUILDING AREAS TO A LINE OUTSIDE THE BUILDING AREAS SHALL BE PLACED IN LAYERS NOT TO EXCEED 8" AND COMPACTED TO AT LEAST 98% OF THE STANDARD PROCTOR MAXIMUM DRY DENSITY (ASTM D-698) WITH THE UPPER 12 INCHES OF SUBGRADE BEING COMPACTED IN 6 INCH LAYERS TO 100% OF THE STANDARD PROCTOR MAXIMUM DRY DENSITY. IN AREAS WHERE NO STRUCTURAL FILL IS TO BE PLACED THE UPPER 12 INCHES OF IN-PLACE SUBGRADE SHOULD BE COMPACTED TO AT LEAST 98% OF THE STANDARD PROCTOR MAXIMUM DRY DENSITY. IF THE MATERIAL IS TOO DRY TO COMPACT TO THE REQUIRED DENSITY EACH LAYER SHALL BE WETTED IN ACCORDANCE WITH COMPACTION REQUIREMENTS. IF THE MATERIAL IS TOO WET TO SECURE PROPER COMPACTION, IT SHALL BE HARROWED REPEATEDLY OR OTHERWISE AERATED WITH SUITABLE EQUIPMENT UNTIL OPTIMUM MOISTURE CONTENT IS OBTAINED. FILL SHALL BE PLACED IN SUCH A MANNER THAT THE SURFACE WILL DRAIN READILY AT ALL TIMES. SEE STRUCTURAL NOTES AND SOILS REPORT FOR ADDITIONAL REQUIREMENTS.

9. LAYOUT: THE CONTRACTOR SHALL PROVIDE ALL LAYOUT REQUIRED TO CONSTRUCT HIS WORK.

10. THE CONTRACTOR IS RESPONSIBLE FOR THE LOCATION AND PROTECTION OF EXISTING UTILITIES DURING CONSTRUCTION.

11. EXISTING BOUNDARY AND TOPOGRAPHIC INFORMATION FROM SURVEY BY ARNOLD CARSON AND PROVIDED BY OWNER.

12. THE CONTRACTOR SHALL VERIFY DIMENSIONS AT JOBSITE.

13. THE CONTRACTOR IS RESPONSIBLE FOR THE COORDINATION OF RELOCATION OR DISCONNECTION OF ALL EXISTING UTILITIES WITH APPLICABLE AGENCIES AND AUTHORITIES.

14. ALL PAVEMENT AND BASE MATERIALS AND WORKMANSHIP SHALL CONFORM TO NCDOT STANDARDS.

15. WATER AND SEWER SERVICES SHALL BE INSTALLED TO MEET LOCAL AND STATE PLUMBING CODES. METER AND TAPS SHALL MEET ALL LOCAL REQUIREMENTS.

16. ALL AREAS SHALL BE GRADED FOR POSITIVE DRAINAGE.

17. SEE SOILS REPORT FOR ADDITIONAL REQUIREMENTS.

18. CONTRACTOR SHALL NOTE THAT EARTHWORK QUANTITIES ARE HIS RESPONSIBILITY. PLANS DO NOT REPRESENT A BALANCED EARTHWORK CONDITION.

19. REINF. CONC. PIPE SHALL BE CLASS III W/RUBBER GASKETED JOINT OR "RAM NECK". INSTALL PER MANUFACTURER'S REQUIREMENTS.

20. USE WHITE LANE MARKING PAINT FOR ALL PAVEMENT MARKINGS. PAINT SHALL BE A CHLORINATED RUBBER ALKYD, FS TT-P-115, TYPE III, FACTORY MIXED, QUICK DRYING, NON-BLEEDING.

21. REFER TO THE PLUMBING DRAWINGS FOR LOCATION AND INVERTS OF NEW WASTE, WATER AND ROOF DRAIN LINES.

For each open utility cut of City streets, a $325 permit shall be required from the City prior to occupancy and/or project acceptance.

CITY OF WILMINGTON NORTH CAROLINA
Public Services • Engineering Division
APPROVED STORMWATER MANAGEMENT PLAN
Date:_____ Permit #_____
Signed: _____

Approved Construction Plan

	Name	Date
Planning		
Traffic		
Fire		

SYMBOL	DATE	DESCRIPTION	BY

REVISIONS

© 2014 NORRIS & TUNSTALL

NOTES AND DETAILS

DUNGANNON VILLAGE
AUTUMN HALL
WILMINGTON, NORTH CAROLINA 28403

OWNER:
AUTUMN HALL DVC, LLC
1201 EASTWOOD ROAD
WILMINGTON, N.C. 28403
(910) 799-8755

NORRIS & TUNSTALL
CONSULTING ENGINEERS, P.C.
902 MARKET STREET
WILMINGTON, NC, 28401
PHONE (910) 343-9653
FAX (910) 343-9604
office@norrisandtunstall.com
licence #C-3641

14069

DES.	JST
CKD.	JPN
DRWN.	NKS
DATE	12/10/14

NORTH CAROLINA PROFESSIONAL SEAL 030969 ENGINEER JASON CLARK

C4

F:\Projects\2005\05150 Autumn Hall Mull-Use\05150 Plans\dwg\05150.master.r26.dwg, 12/10/2014 10:01:45 AM

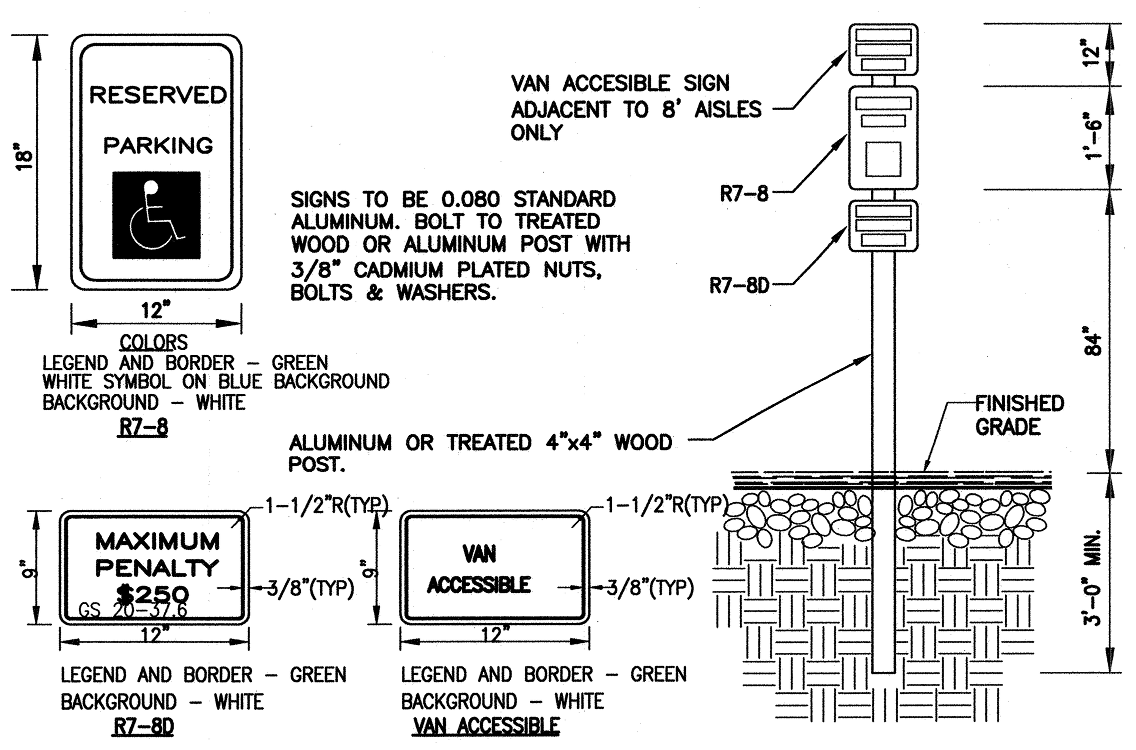

NOT TO SCALE

1 TYPICAL HANDICAPPED SIGN DETAIL

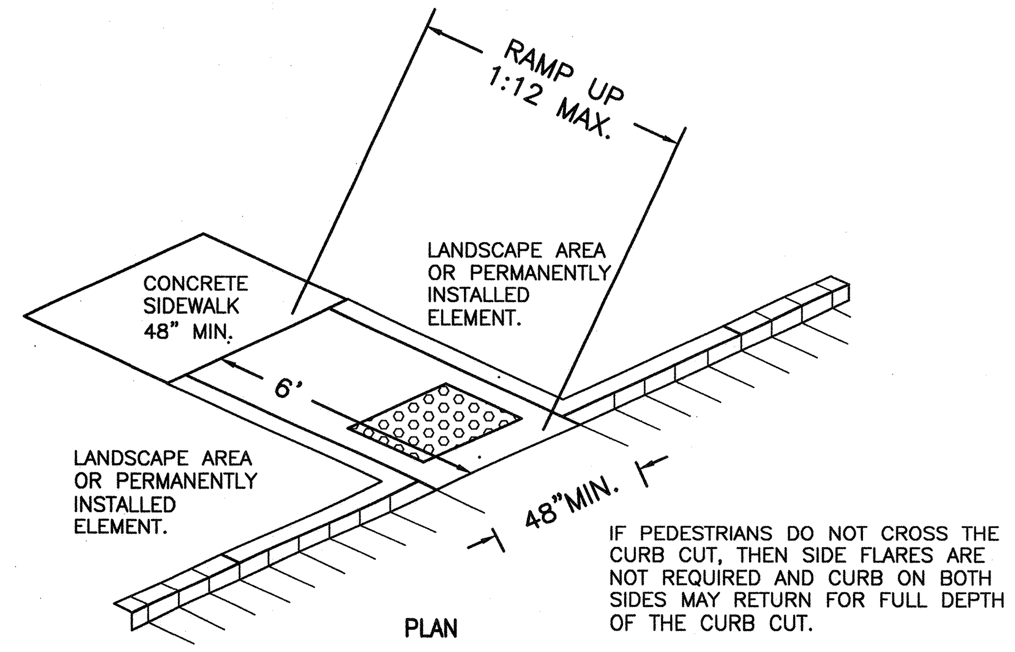

IF PEDESTRIANS DO NOT CROSS THE CURB CUT, THEN SIDE FLARES ARE NOT REQUIRED AND CURB ON BOTH SIDES MAY RETURN FOR FULL DEPTH OF THE CURB CUT.

* SEE NOTES ON DETECTABLE WARNING

NOT TO SCALE

2 SIDEWALK, CURB CUT AND WHEEL CHAIR RAMP DETAIL

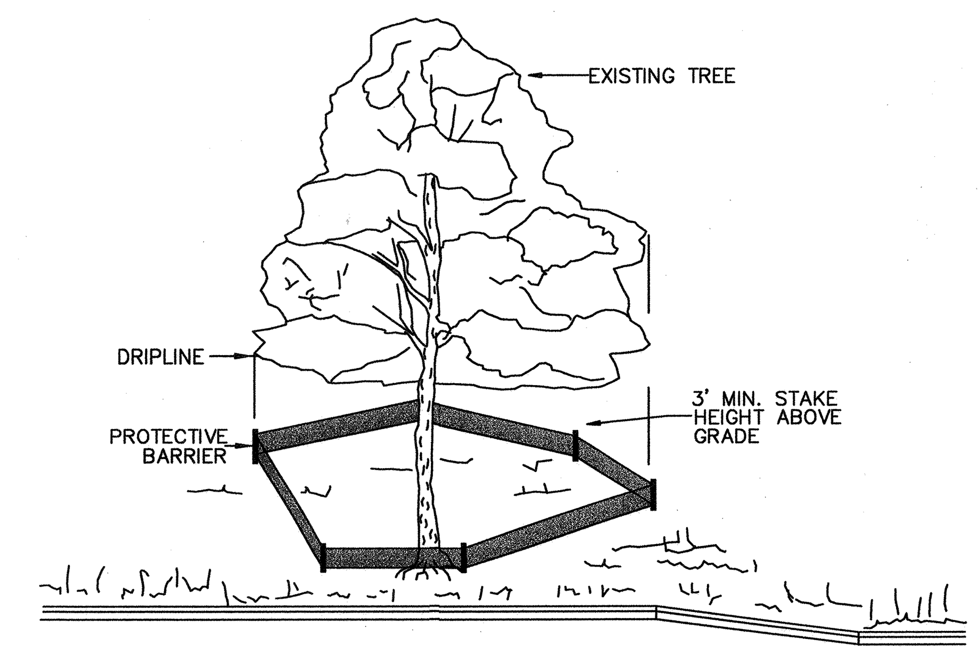

NOTE:
1. TREES TO BE SAVED WILL BE CLEARLY MARKED PRIOR TO CONSTRUCTION AND A PROTECTIVE BARRIER IS TO BE INSTALLED AT THE DRIPLINE.

2. DRIP LINE – THE AREA OF SOIL DIRECTLY BENEATH THE TREE EXTENDING OUT TO THE TIPS OF THE OUTERMOST BRANCHES.

3. SIGNAGE STATING "TREE PROTECTION ZONE DO NOT ENTER" IN ENGLISH SHALL BE ATTACHED TO FENCING AND PLACED AT 50' INTERVALS WITH A MINIMUM OF TWO SIGNS PER TREE PROTECTION AREA.

NOT TO SCALE

3 METHOD OF TREE PROTECTION

CITY OF WILMINGTON STANDARD NOTES:

1. CONTACT THE NORTH CAROLINA ONE CALL CENTER PRIOR TO DOING ANY DIGGING AT 1-800-632-4949.
2. PRIOR TO ANY CLEARING, GRADING OR CONSTRUCTION ACTIVITY, TREE PROTECTION FENCING WILL BE INSTALLED AROUND PROTECTED TREES OR GROVES OF TREES AND NO CONSTRUCTION WORKERS, TOOLS, MATERIALS, OR VEHICLES ARE PERMITTED WITHIN THE TREE PROTECTION FENCING;
3. ALL PAVEMENT MARKINGS IN PUBLIC RIGHTS-OF-WAY AND FOR DRIVEWAYS ARE TO BE THERMOPLASTIC AND MEET CITY AND/OR NCDOT STANDARDS.
4. ALL PARKING STALL MARKINGS AND LANE ARROWS WITHIN THE PARKING AREAS SHALL BE WHITE.
5. INSTALL REFLECTORS PER CITY AND NCDOT STANDARDS. TRAFFIC ENGINEERING MUST APPROVE OF PAVEMENT MARKING LAYOUT PRIOR TO ACTUAL STRIPING.
6. ALL TRAFFIC CONTROL SIGNS AND MARKINGS OFF THE RIGHT-OF-WAY ARE TO BE MAINTAINED BY THE PROPERTY OWNER IN ACCORDANCE WITH MUTCD STANDARDS.
7. TRAFFIC CONTROL DEVICES (INCLUDING SIGNS AND PAVEMENT MARKINGS) IN AREAS OPEN TO PUBLIC TRAFFIC ARE TO MEET MUTCD (MANUAL ON UNIFORM TRAFFIC CONTROL DEVICES) STANDARDS.
8. IT SHALL BE THE RESPONSIBILITY OF THE SUBDIVIDER TO ERECT OFFICIAL STREET NAME SIGNS AT ALL INTERSECTIONS ASSOCIATED WITH THE SUBDIVISION IN ACCORDANCE WITH THE TECHNICAL STANDARDS AND SPECIFICATIONS MANUAL. THE SUBDIVIDER MAY ACQUIRE AND ERECT OFFICIAL STREET NAME SIGNS OR MAY CHOOSE TO CONTRACT WITH THE CITY TO INSTALL THE STREET SIGNS AND THE SUBDIVIDER SHALL PAY THE COST OF SUCH INSTALLATION. CONTACT TRAFFIC ENGINEERING AT 341-7888 TO DISCUSS INSTALLATION OF TRAFFIC AND STREET NAME SIGNS. POSTED STREET NAMES MUST BE APPROVED PRIOR TO INSTALLATION OF STREET NAME SIGNS.
9. CONTACT TRAFFIC ENGINEERING AT 341-7888 FORTY-EIGHT HOURS PRIOR TO ANY EXCAVATION IN THE RIGHT-OF-WAY.
10. A UTILITY CUT PERMIT IS REQUIRED FOR EACH OPEN CUT OF A CITY STREET. CONTACT 341-5888 FOR MORE DETAILS. IN CERTAIN CASES AN ENTIRE RESURFACING OF THE AREA BEING OPEN CUT MAY BE REQUIRED.
11. ANY BROKEN OR MISSING SIDEWALK PANELS, DRIVEWAY PANELS, AND CURBING WILL BE REPLACED.
12. CONTACT KAREN DIXON AT 341-7888 TO DISCUSS STREET LIGHTING OPTIONS.
13. PROJECT SHALL COMPLY WITH CFPUA CROSS CONNECTION CONTROL REQUIREMENTS. WATER METER(S) CANNOT BE RELEASED UNTIL ALL REQUIREMENTS ARE MET AND THE STATE HAS GIVEN THEIR FINAL APPROVAL. CALL 343-3910 FOR INFORMATION.
14. IF THE CONTRACTOR DESIRES CFPUA WATER FOR CONSTRUCTION HE SHALL APPLY IN ADVANCE FOR THIS SERVICE AND MUST PROVIDE A REDUCED PRESSURE ZONE (RPZ) BACKFLOW PREVENTION DEVICE ON THE DEVELOPER'S SIDE OF THE WATER METER BOX.
15. ANY IRRIGATION SYSTEM SUPPLIED BY CFPUA WATER SHALL COMPLY WITH CFPUA CROSS CONNECTION CONTROL REGULATIONS. CALL 332-6558 FOR INFORMATION.
16. ANY BACKFLOW PREVENTION DEVICES REQUIRED BY CFPUA WILL NEED TO BE ON THE LIST OF APPROVED DEVICES BY USCFCCCHR OR ASSE.
17. WHEN PVC WATER MAINS AND/OR POLYETHYLENE SERVICES ARE PROPOSED, THE PIPES ARE TO BE MARKED WITH NO. 10 INSULATED SINGLE STRAND COPPER WIRE INSTALLED THE ENTIRE LENGTH AND SECURED TO ALL VALVES. THIS WIRE IS TO BE ACCESSIBLE AT ALL FIRE HYDRANTS AND WATER METER BOXES TO AID IN FUTURE LOCATION OF FACILITIES.
18. THE NUMBER AND SPACING OF DRIVEWAYS FOR ALL INTERCONNECTED SITES WILL BE DETERMINED BY THE COMBINED FRONTAGE OF THE INTERCONNECTED PROPERTIES.
19. UNDERGROUND FIRE LINE MUST BE PERMITTED AND INSPECTED BY THE WILMINGTON FIRE DEPARTMENT FROM THE PUBLIC ROW TO THE BUILDING. CONTACT THE WILMINGTON FIRE DEPARTMENT DIVISION OF FIRE AND LIFE SAFETY AT 910-343-0696 FOR ADDITIONAL INFORMATION.
20. A LANDSCAPE PLAN INDICATING THE LOCATION OF REQUIRED STREET TREES SHALL BE SUBMITTED TO THE CITY OF WILMINGTON TRAFFIC ENGINEER DIVISION AND PARKS AND RECREATIN DEPARTMENT FOR REVIEW AND APPROVAL PRIOR TO THE RECORDING OF THE FINAL PLAT.

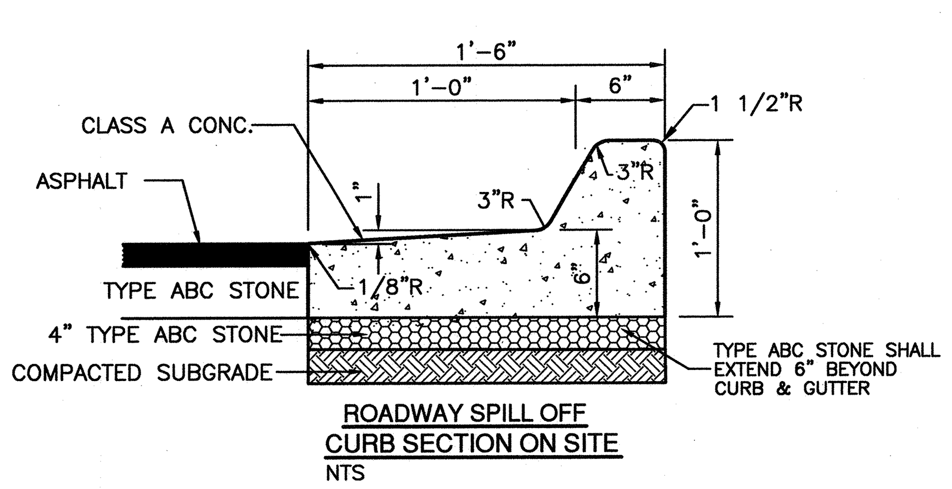

NOTE: CURB TYPE DEPENDS ON GRADES SHOWN ON GRADING PLAN. GRADES INDICATING FALL AWAY FROM CURB SHALL BE SPILL OFF TYPE CURB. GRADES INDICATING CURB ACCEPTING FLOW SHALL BE FLOW LINE TYPE.

NOT TO SCALE

4 18" CURB AND GUTTER SECTION (SPILL-OFF)

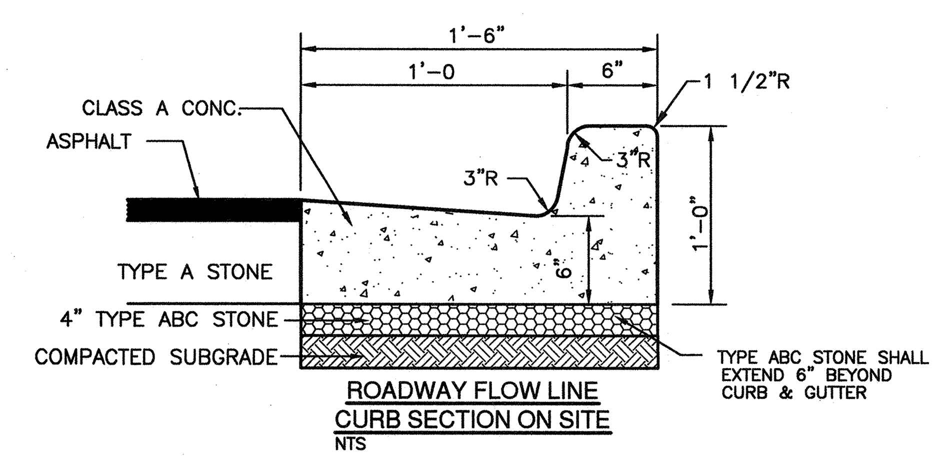

NOTE: CURB TYPE DEPENDS ON GRADES SHOWN ON GRADING PLAN. GRADES INDICATING FALL AWAY FROM CURB SHALL BE SPILL OFF TYPE CURB. GRADES INDICATING CURB ACCEPTING FLOW SHALL BE FLOW LINE TYPE.

NOT TO SCALE

5 18" CURB AND GUTTER SECTION (FLOW-LINE)

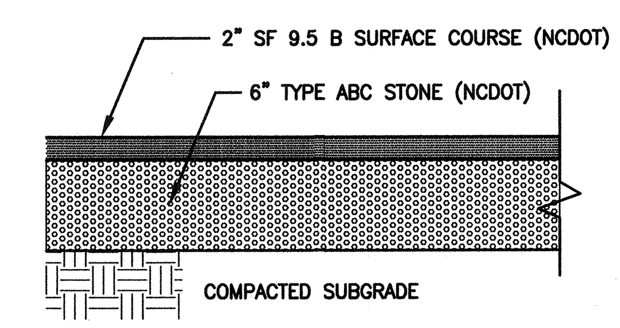

NOTE: PAVEMENT SECTION MAY VARY DEPENDING UPON FIELD CONDITIONS. CONTRACTOR SHALL COORDINATE w/OWNER & GEOTECHNICAL ENGINEER TO DETERMINE ACTUAL PAVEMENT SECTION.

NOT TO SCALE

6 ASPHALT PAVEMENT SECTION

NOTES:
1. SIDEWALK THICKNESS SHALL BE 4" UNLESS NOTED OTHERWISE.
2. CONTRACTION JOINTS (C.J.) SPACE SAME AS SIDEWALK WIDTH.
3. THICKEN SIDEWALK TO 6" AT DRIVEWAYS.
4. THICKEN SIDEWALK TO 6" IN LAST 3' WHERE IT ABUTS PAVEMENT WITH NO CURB.
5. 1/2" EXPANSION JOINT (E.J.) AND SNAP CAP EXPANSION JOINT COVERS ARE REQUIRED AT 50' MAX. AT SIDEWALK JUNCTIONS, AT STRUCTURES, AND AS NOTED ON SITE PLAN. 6. PROVIDE A LAYER OF 15# BLDG. FELT BETWEEN WALK AND ADJACENT PARALLELING CURB OR STRUCTURE.

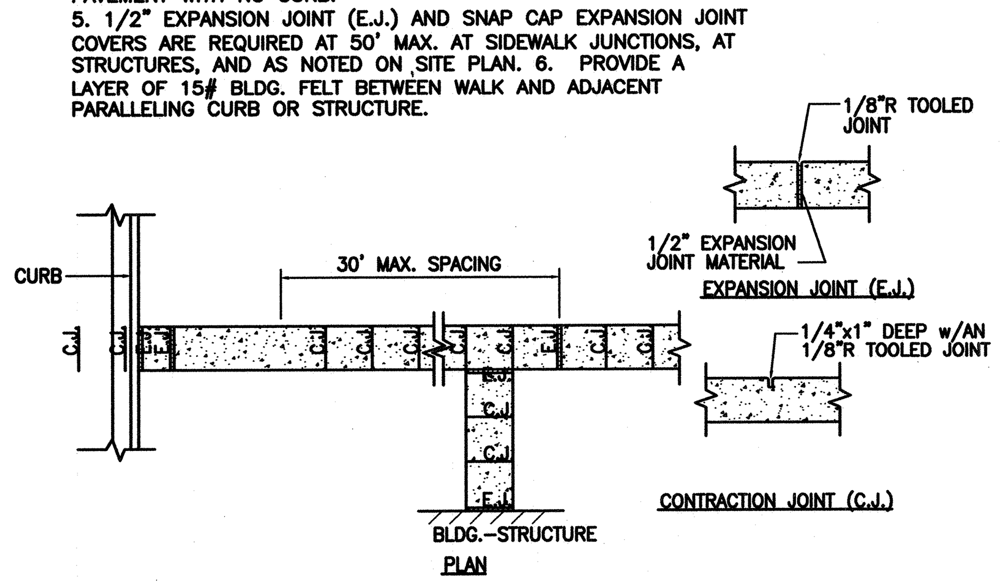

NOT TO SCALE

7 SIDEWALK JOINT DETAIL

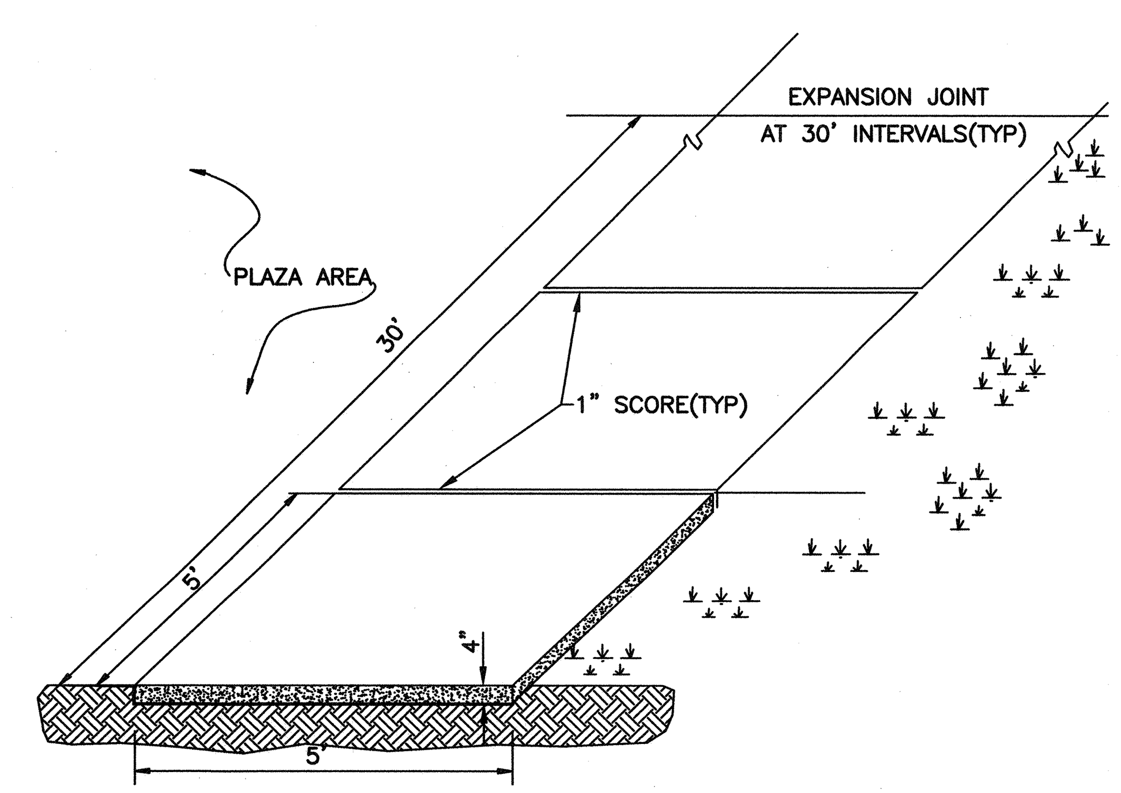

CITY OF WILM. SD 8-15

NOT TO SCALE

8 STANDARD SIDEWALK DETAIL

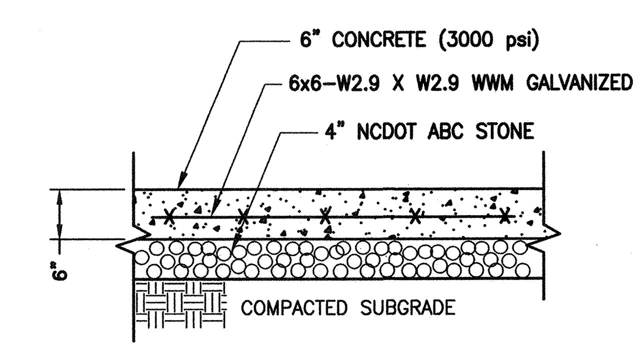

NOTES:
1. CONTROL JOINTS SHALL BE EVERY 15 FT. (MAX.) AND EXPANSION JOINTS SHALL BE EVERY 50 FT. (MAX).
2. PAVEMENT SECTION MAY VARY DEPENDING UPON FIELD CONDITIONS. THE PAVING CONTRACTOR SHALL COORDINATE WITH OWNER REPRESENTATIVE AND GEOTECHNICAL ENGINEER TO DETERMINE ACTUAL PAVEMENT SECTION.

NOT TO SCALE

9 HEAVY DUTY CONCRETE PAVEMENT SECTION

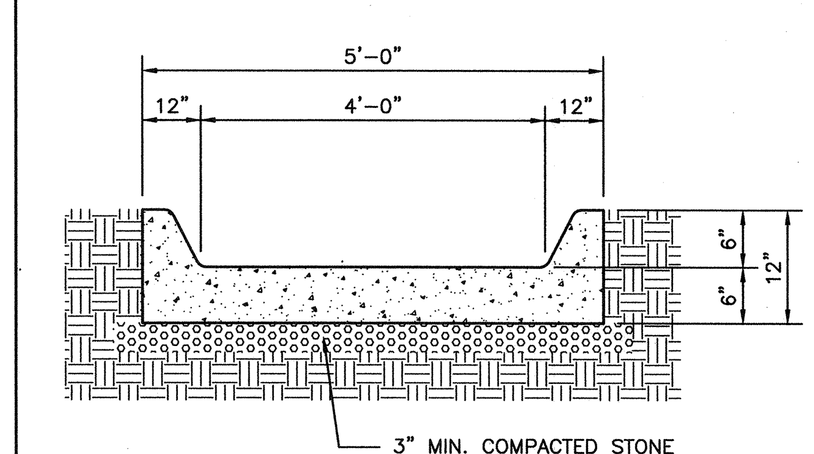

10 CONCRETE FLUME SECTION

For each open utility cut of City streets, a $325 permit shall be required from the City prior to occupancy and/or project acceptance.

CITY OF WILMINGTON NORTH CAROLINA
Public Services • Engineering Division
APPROVED STORMWATER MANAGEMENT PLAN
Date:__________ Permit #______________
Signed: ______________________

Approved Construction Plan

	Name	Date
Planning		
Traffic		
Fire		

SYMBOL	DATE	DESCRIPTION	BY

REVISIONS

© 2014 NORRIS & TUNSTALL

NOTES AND DETAILS

DUNGANNON VILLAGE
AUTUMN HALL

WILMINGTON, NORTH CAROLINA 28403

OWNER:
AUTUMN HALL DVC, LLC
1201 EASTWOOD ROAD
WILMINGTON, N.C. 28403
(910) 799-8755

NORRIS & TUNSTALL
CONSULTING ENGINEERS, P.C.
902 MARKET STREET
WILMINGTON, NC, 28401
PHONE (910) 343-9653
FAX (910) 343-9604
office@nkteng.com
licence #C-3641

14069

DES. JST
CKD. JPN
DRWN. NKS
DATE 12/10/14

NORTH CAROLINA PROFESSIONAL SEAL 030869 ENGINEER T. JASON CLARK

C5

F:\Projects\2005\05150 Autumn Hall Muli-Use\05150 Plans\dwg\05150.master.r26.dwg, 12/10/2014 10:02:01 AM

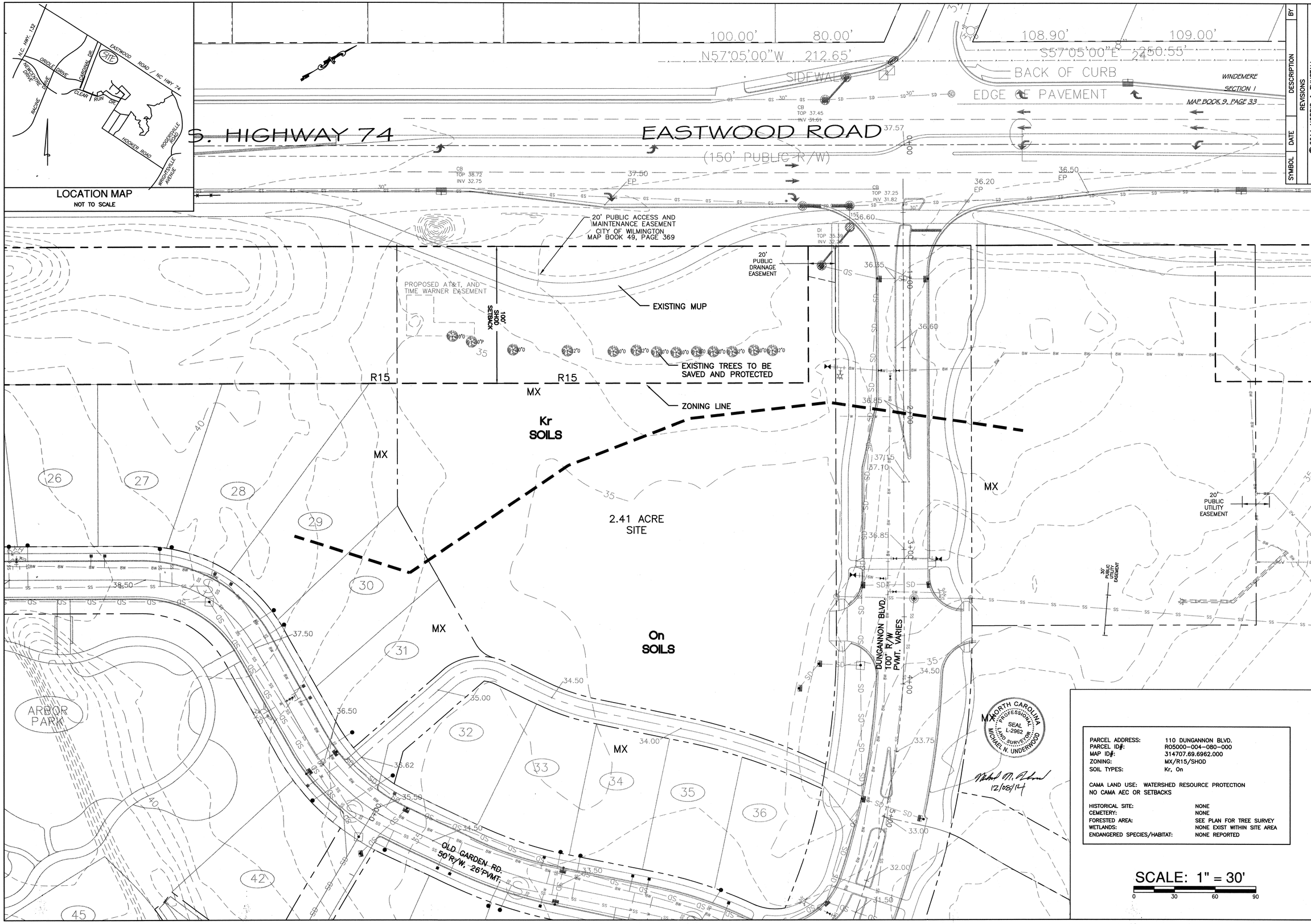

SYMBOL	DATE	DESCRIPTION	BY
		REVISIONS	

©2014 NORRIS & TUNSTALL

INVENTORY SITE PLAN

DUNGANNON VILLAGE AUTUMN HALL

WILMINGTON, NORTH CAROLINA 28403

OWNER:
AUTUMN HALL DVC, LLC
1201 EASTWOOD ROAD
WILMINGTON, N.C. 28403
(910) 799-8755

NORRIS & TUNSTALL
CONSULTING ENGINEERS, INC.
902 MARKET STREET
WILMINGTON, NC. 28401
PHONE (910) 343-9653
FAX (910) 343-9604
licence #C-3641

14069

DES. JST
CKD. JPN
DRWN. NKS
DATE 12/8/14

NORTH CAROLINA PROFESSIONAL SEAL 030869 ENGINEER JASON CLARK

I1

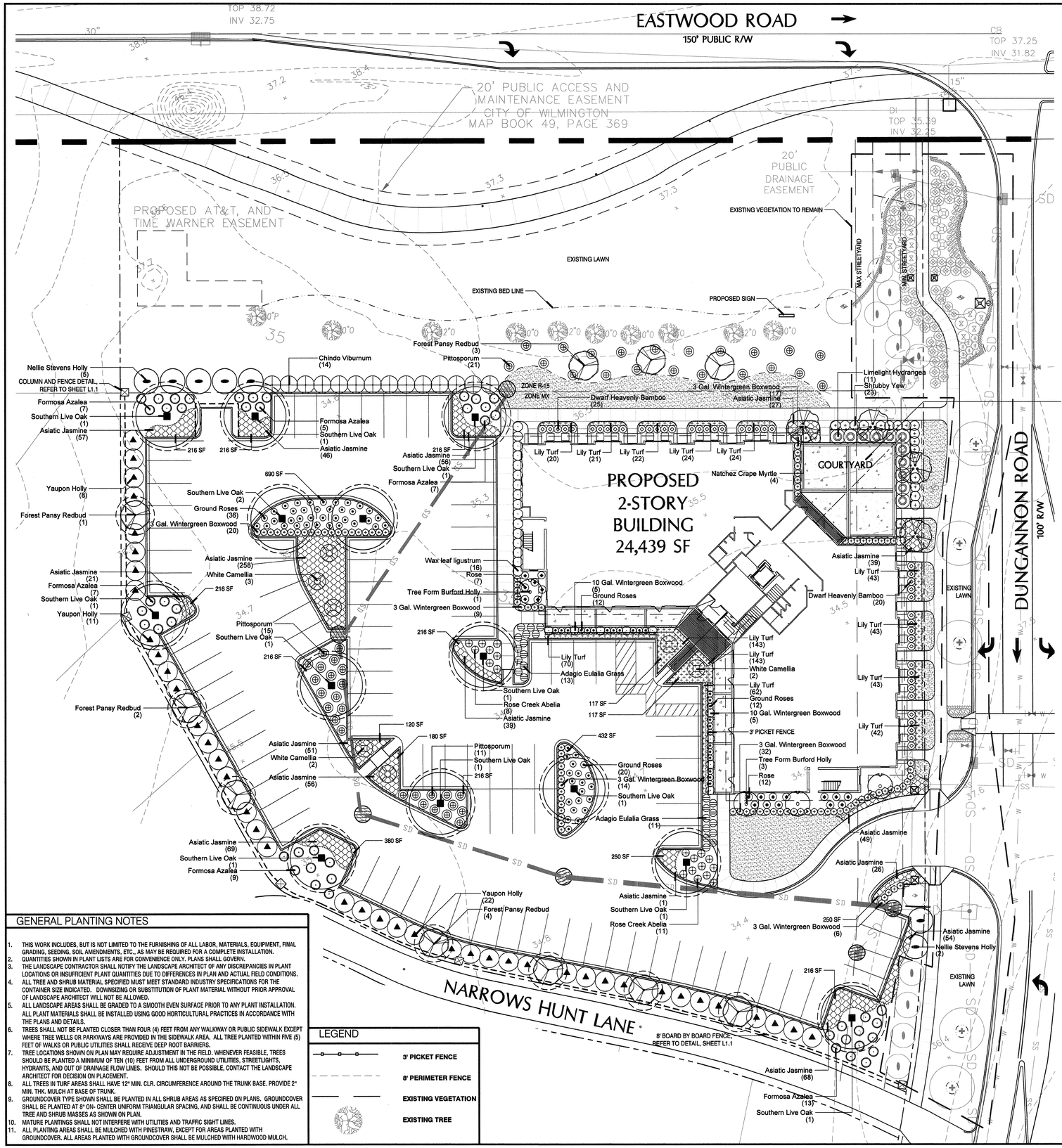

GENERAL PLANTING NOTES

1. THIS WORK INCLUDES, BUT IS NOT LIMITED TO THE FURNISHING OF ALL LABOR, MATERIALS, EQUIPMENT, FINAL GRADING, SEEDING, SOIL AMENDMENTS, ETC., AS MAY BE REQUIRED FOR A COMPLETE INSTALLATION.
2. QUANTITIES SHOWN IN PLANT LISTS ARE FOR CONVENIENCE ONLY. PLANS SHALL GOVERN.
3. THE LANDSCAPE CONTRACTOR SHALL NOTIFY THE LANDSCAPE ARCHITECT OF ANY DISCREPANCIES IN PLANT LOCATIONS OR INSUFFICIENT PLANT QUANTITIES DUE TO DIFFERENCES IN PLAN AND ACTUAL FIELD CONDITIONS.
4. ALL TREE AND SHRUB MATERIAL SPECIFIED MUST MEET STANDARD INDUSTRY SPECIFICATIONS FOR THE CONTAINER SIZE INDICATED. DOWNSIZING OR SUBSTITUTION OF PLANT MATERIAL WITHOUT PRIOR APPROVAL OF LANDSCAPE ARCHITECT WILL NOT BE ALLOWED.
5. ALL LANDSCAPE AREAS SHALL BE GRADED TO A SMOOTH EVEN SURFACE PRIOR TO ANY PLANT INSTALLATION. ALL PLANT MATERIALS SHALL BE INSTALLED USING GOOD HORTICULTURAL PRACTICES IN ACCORDANCE WITH THE PLANS AND DETAILS.
6. TREES SHALL NOT BE PLANTED CLOSER THAN FOUR (4) FEET FROM ANY WALKWAY OR PUBLIC SIDEWALK EXCEPT WHERE TREE WELLS OR PARKWAYS ARE PROVIDED IN THE SIDEWALK AREA. ALL TREE PLANTED WITHIN FIVE (5) FEET OF WALKS OR PUBLIC UTILITIES SHALL RECEIVE DEEP ROOT BARRIERS.
7. TREE LOCATIONS SHOWN ON PLAN MAY REQUIRE ADJUSTMENT IN THE FIELD. WHENEVER FEASIBLE, TREES SHOULD BE PLANTED A MINIMUM OF TEN (10) FEET FROM ALL UNDERGROUND UTILITIES, STREETLIGHTS, HYDRANTS, AND OUT OF DRAINAGE FLOW LINES. SHOULD THIS NOT BE POSSIBLE, CONTACT THE LANDSCAPE ARCHITECT FOR DECISION ON PLACEMENT.
8. ALL TREES IN TURF AREAS SHALL HAVE 12" MIN. CLR. CIRCUMFERENCE AROUND THE TRUNK BASE. PROVIDE 2" MIN. THK. MULCH AT BASE OF TRUNK.
9. GROUNDCOVER TYPE SHOWN SHALL BE PLANTED IN ALL SHRUB AREAS AS SPECIFIED ON PLANS. GROUNDCOVER SHALL BE PLANTED AT 8" ON- CENTER UNIFORM TRIANGULAR SPACING, AND SHALL BE CONTINUOUS UNDER ALL TREE AND SHRUB MASSES AS SHOWN ON PLAN.
10. MATURE PLANTINGS SHALL NOT INTERFERE WITH UTILITIES AND TRAFFIC SIGHT LINES.
11. ALL PLANTING AREAS SHALL BE MULCHED WITH PINESTRAW, EXCEPT FOR AREAS PLANTED WITH GROUNDCOVER. ALL AREAS PLANTED WITH GROUNDCOVER SHALL BE MULCHED WITH HARDWOOD MULCH.

LEGEND

- 3' PICKET FENCE
- 8' PERIMETER FENCE
- EXISTING VEGETATION
- EXISTING TREE

SITE DATA

SITE DATA

USE:	OFFICE/RETAIL
ADDRESS:	110 DUNGANNON BLVD.
PARCEL ID:	R05000-004-080-000
ZONING:	MX/R15/SHOD
SITE AREA:	2.41 AC (105,107 SF)
CAMA:	WATERSHED RESOURCE PROTECTION

LANDSCAPE REQUIREMENTS

	REQUIRED	PROVIDED
STREET YARD PLANTING		
PRIMARY STREETYARD		
DUNGANNON BLVD.		
(365 LF * 18) =	6570 SF	6,623 SF
TREES REQUIRED (1 PER 600 SF)		
6,570 SF /600	11 TREES	14 EXISTING 5 PROPOSED 18 TOTAL
SHRUBS REQUIRED (6 PER 600 SF)		
(6,570 SF /600)*6	66 SHRUBS	27 EXISTING 81 PROPOSED 108 TOTAL
PARKING LOT INTERIOR LANDSCAPE REQUIREMENTS		
CANOPY COVERAGE		
37,000 SF * .30	11,100 SF	9,1910 SF (13 LARGE TREES* 707)
11,100 SF /707 SF =	16 TREES	2,198 SF (7 MEDIUM TREES * 314)
		11,389 SF
FOUNDATION PLANTING		
WEST: (32' HT x 66 LF x .12)	253 SF	405 SF
FRONT: (32' HT x 140 LF x .12)	537 SF	1,284 SF
SOUTH: (32' HT x 66 LF x .12)	253 SF	865 SF

OVERALL SITE
EXISTING TREES TO REMAIN ON SITE

QUANTITY	SIZE	COMMON NAME	CREDITS
6	10"	OAK	12
3	12"	OAK	9
1	10"	PINE	2
TOTAL CREDITED TREES			23 CREDITS

TREE REQUIREMENTS PER DISTURBED ACRE
15 TREES PER DISTURBED ACRE MUST BE RETAINED OR PLANTED ON SITE.

REQUIRED: 2.41 ACRES DISTURBED x 15 TREES = 36 TREES REQUIRED
PROVIDED: 23 TREE CREDITS (EXISTING RETAINED TREES)
38 TREES PLANTED - REFER TO PLANTING LEGEND
TOTAL: 61 TREES PROVIDED

PLANT SCHEDULE

TREES	BOTANICAL NAME / COMMON NAME	CONT	CAL	RANGE		QTY
	Cercis c. `Forest Pansy` TM / Forest Pansy Redbud	25 GAL	1.5-2" CAL	8` HT		10
	Ilex c. `Burfordii` / Tree Form Burford Holly Uniform	B & B	1.5" CAL	7-8` HT		4
	Ilex x `Nellie R Stevens` / Nellie Stevens Holly	B & B	1.5" CAL	7-8` HT		7
	Lagerstroemia x `Natchez` / Natchez Crape Myrtle TRANSPLANTED FROM SITE	TRANSPLANTED		8-10` HT		4
	Quercus virginiana / Southern Live Oak	B & B	4.5" CAL	14-16` HT		13
SHRUBS	BOTANICAL NAME / COMMON NAME	SIZE	RANGE			QTY
	Abelia x grandiflora `Rose Creek` / Rose Creek Abelia	3 gal	18-24" HT			19
	Azalea L. `Formosa` / Formosa Azalea	3 gal	18-24" HT			48
	Buxus m. `Wintergreen` / 10 Gal. Wintergreen Boxwood	10 gal	24-36" HT			10
	Buxus m. `Wintergreen` / 3 Gal. Wintergreen Boxwood	3 gal	12-18" HT			98
	Camellia sasanqua `Hana Jiman` / White Camellia	10 gal	4-5` HT			7
	Hydrangea paniculata `Limelight` TM / Limelight Hydrangea	3 gal	18-24" HT			11
	Ilex vomitoria / Yaupon Holly	15 gal	4-5` HT			41
	Ligustrum j. `Recurvifolium` / Wax leaf ligustrum	3 gal	24-30" HT			16
	Miscanthus s. `Adagio` / Adagio Eulalia Grass	3 gal	18-24" HT			24
	Nandina domestica `Compacta` / Dwarf Heavenly Bamboo	3 gal	18-24" HT			45
	Pittosporum tobira / Pittosporum	3 gal	18-24" HT			47
	Podocarpus macrophyllus maki / Shrubby Yew	10 gal	4` HT			23
	Rosa x `Flower Carpet White` / Ground Roses	3 GAL	12-18" HT			80
	Rosa x `Knockout` TM / Rose	3 gal	18-24" HT			19
	Viburnum a. `Chindo` / Chindo Viburnum	15 gal	3-4` HT			14
GROUND COVERS	BOTANICAL NAME / COMMON NAME	SIZE	RANGE		SPACING	QTY
	Liriope muscari / Lily Turf	1 qt	6-12" HT		12" o.c.	700
	Trachelospermum a. `Asiatic` / Asiatic Jasmine	1 qt	6-12" HT		18" o.c.	917
SOD/SEED	BOTANICAL NAME / COMMON NAME	SIZE	RANGE		SPACING	QTY
	Zoysia japonica `Crowne` / Korean Grass	sod				3,249 sf

NORTH

0 20 40 60 80

SCALE: 1" = 20'

MIHALY
LAND DESIGN
PLANNING + LANDSCAPE ARCHITECTURE
330 Military Cutoff Rd. Suite A3
Wilmington, NC 28403 910.392.4355

NORTH CAROLINA LICENSED LANDSCAPE ARCHITECT JOSHUA W. MIHALY

Revisions

CLIENT
AUTUMN HALL DVC, LLC
1201 EASTWOOD ROAD
WILMINGTON, NC 28403
PHONE: 910.799.8755

PROJECT
DUNGANNON VILLAGE
AUTUMN HALL
WILMINGTON, NC
LANDSCAPE PLAN

Date:	03/09/2016
Phase:	
Job Number:	400-17
Designed by:	MLD
Drawn by:	MAS
Checked by:	JWM

Sheet Title:
PLANTING PLAN

Sheet Number
L1.0
of 2 sheets

A. COURTYARD ENLARGEMENT

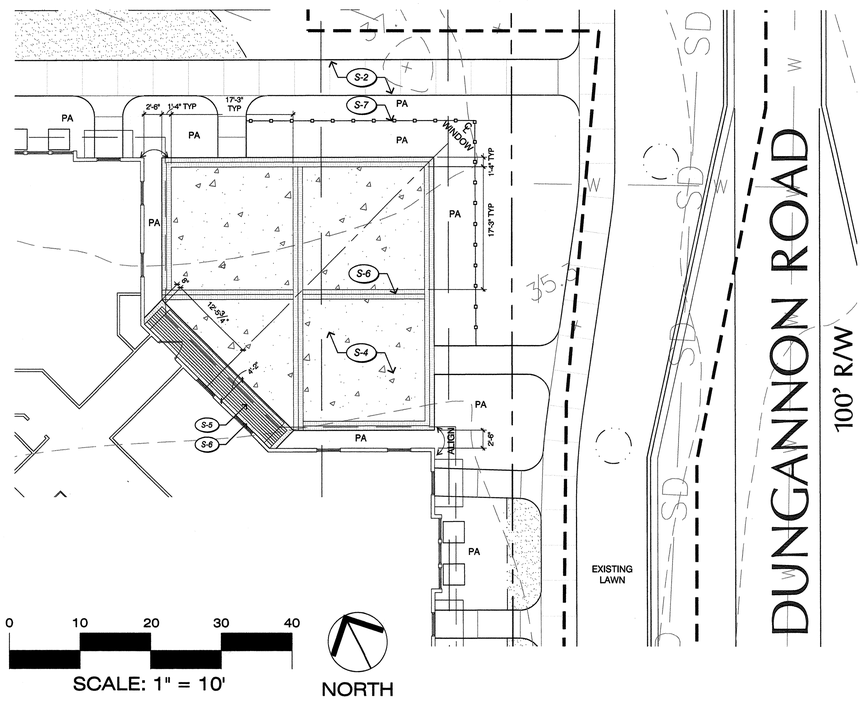

B. ENTRANCE ENLARGMENT

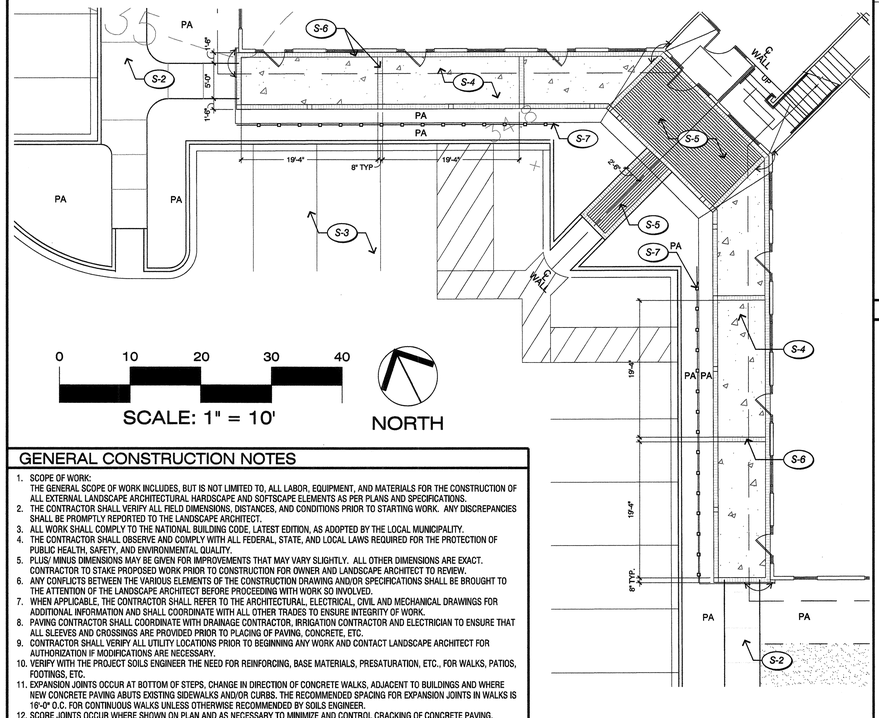

GENERAL CONSTRUCTION NOTES

1. SCOPE OF WORK:
   THE GENERAL SCOPE OF WORK INCLUDES, BUT IS NOT LIMITED TO, ALL LABOR, EQUIPMENT, AND MATERIALS FOR THE CONSTRUCTION OF ALL EXTERNAL LANDSCAPE ARCHITECTURAL HARDSCAPE AND SOFTSCAPE ELEMENTS AS PER PLANS AND SPECIFICATIONS.
2. THE CONTRACTOR SHALL VERIFY ALL FIELD DIMENSIONS, DISTANCES, AND CONDITIONS PRIOR TO STARTING WORK. ANY DISCREPANCIES SHALL BE PROMPTLY REPORTED TO THE LANDSCAPE ARCHITECT.
3. ALL WORK SHALL COMPLY TO THE NATIONAL BUILDING CODE, LATEST EDITION, AS ADOPTED BY THE LOCAL MUNICIPALITY.
4. THE CONTRACTOR SHALL OBSERVE AND COMPLY WITH ALL FEDERAL, STATE, AND LOCAL LAWS REQUIRED FOR THE PROTECTION OF PUBLIC HEALTH, SAFETY, AND ENVIRONMENTAL QUALITY.
5. PLUS/ MINUS DIMENSIONS MAY BE GIVEN FOR IMPROVEMENTS THAT MAY VARY SLIGHTLY. ALL OTHER DIMENSIONS ARE EXACT. CONTRACTOR TO STAKE PROPOSED WORK PRIOR TO CONSTRUCTION FOR OWNER AND LANDSCAPE ARCHITECT TO REVIEW.
6. ANY CONFLICTS BETWEEN THE VARIOUS ELEMENTS OF THE CONSTRUCTION DRAWING AND/OR SPECIFICATIONS SHALL BE BROUGHT TO THE ATTENTION OF THE LANDSCAPE ARCHITECT BEFORE PROCEEDING WITH WORK SO INVOLVED.
7. WHEN APPLICABLE, THE CONTRACTOR SHALL REFER TO THE ARCHITECTURAL, ELECTRICAL, CIVIL AND MECHANICAL DRAWINGS FOR ADDITIONAL INFORMATION AND SHALL COORDINATE WITH ALL OTHER TRADES TO ENSURE INTEGRITY OF WORK.
8. PAVING CONTRACTOR SHALL COORDINATE WITH DRAINAGE CONTRACTOR, IRRIGATION CONTRACTOR AND ELECTRICIAN TO ENSURE THAT ALL SLEEVES AND CROSSINGS ARE PROVIDED PRIOR TO PLACING OF PAVING, CONCRETE, ETC.
9. CONTRACTOR SHALL VERIFY ALL UTILITY LOCATIONS PRIOR TO BEGINNING ANY WORK AND CONTACT LANDSCAPE ARCHITECT FOR AUTHORIZATION IF MODIFICATIONS ARE NECESSARY.
10. VERIFY WITH THE PROJECT SOILS ENGINEER THE NEED FOR REINFORCING, BASE MATERIALS, PRESATURATION, ETC., FOR WALKS, PATIOS, FOOTINGS, ETC.
11. EXPANSION JOINTS OCCUR AT BOTTOM OF STEPS, CHANGE IN DIRECTION OF CONCRETE WALKS, ADJACENT TO BUILDINGS AND WHERE NEW CONCRETE PAVING ABUTS EXISTING SIDEWALKS AND/OR CURBS. THE RECOMMENDED SPACING FOR EXPANSION JOINTS IN WALKS IS 16'-0" O.C. FOR CONTINUOUS WALKS UNLESS OTHERWISE RECOMMENDED BY SOILS ENGINEER.
12. SCORE JOINTS OCCUR WHERE SHOWN ON PLAN AND AS NECESSARY TO MINIMIZE AND CONTROL CRACKING OF CONCRETE PAVING.

FINISH SCHEDULE

SYMBOL	DESCRIPTION	DETAIL	SHEET
S-1	**PROPOSED CONCRETE CURB - REFER TO ENGINEER'S PLANS**		
S-2	**PROPOSED CONCRETE SIDEWALK** COLOR: MATCH COMMUNITY STANDARD FINISH: MATCH COMMUNITY STANDARD		
S-3	**PROPOSED ASPHALT PAVING - REFER TO ENGINEER PLAN'S**		
S-4	**ENHANCED CONCRETE PAVING** FINISH: SHELL TABBY		
S-5	**BRICK PAVING** BRICK: OLD TOWNE FIELD: RUNNING BOND BAND: SOLDIER COURSE AVAILABLE FROM: PALMETTO BRICK, (800)922-4423	2	L1.1
S-6	**BRICK BAND** BRICK: OLD TOWNE PATTERN: SOLDIER COURSE AVAILABLE FROM: PALMETTO BRICK, (800)922-4423	3	L1.1
S-7	**3' DECORATIVE PICKET FENCE** PAINT COLOR: WHITE		

SYMBOL LEGEND

SYMBOL	DESCRIPTION	SYMBOL	DESCRIPTION
PA	PLANTING AREA	℄	CENTER LINE
BOC	BEGINNING OF CURVE		ALIGN
EJ	EXPANSION JOINT	S-1	CALL OUT

1 | 8' BOARD ON BOARD FENCE

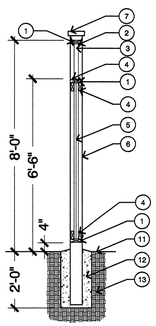

SECTION VIEW
SCALE: 3/8" = 1'-0"

LEGEND

1. 2 x 6 CAP
2. 1 x 1 NAILER
3. 2 x 2 PICKET
4. 2 x 4 STRINGER
5. 1 x 6 VERTICAL BOARDS - 1" OVERLAP
6. 6 x 6 POSTS AT 8'-0" O.C.
7. DECORATIVE POST CAP
8. PRECAST CONCRETE CAP
   MATCH COMMUNITY STANDARD
9. OYSTER SHELL TABBY STUCCO VENEER
10. 4x8x16 CMU - GROUT CELLS SOLID
11. FINISH GRADE
12. CONCRETE FOOTING
13. COMPACTED SUBGRADE

NOTES:
- PAINT COLOR: CHARLESTON GREEN
- TREAT ALL EXPOSED SURFACES WITH (2) TWO COATS MOISTURE-PROOF PRIMER AND (2) COATS ENAMEL.
- ALL CONNECTORS, FASTENERS AND OTHER HARDWARE SHALL BE HOT DIPPED GALVANIZED
- STRUCTURAL ENGINEER TO PROVIDE SUPPORTIVE DETAILS SHOWING FOOTING AND REINFORCEMENT

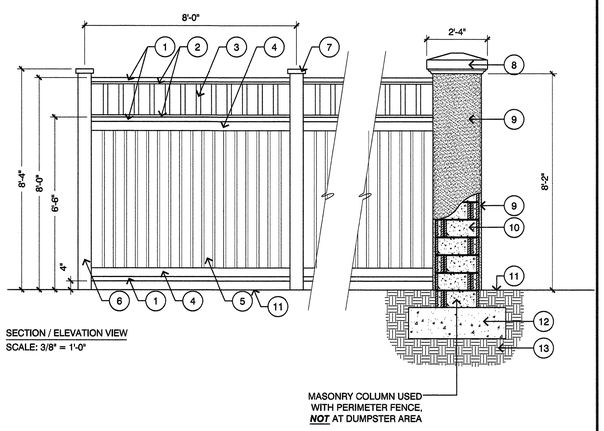

SECTION / ELEVATION VIEW
SCALE: 3/8" = 1'-0"

2 | BRICK PAVERS WITH BRICK PAVER BAND

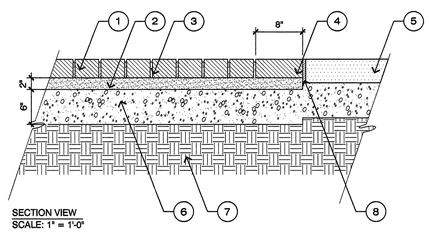

SECTION VIEW
SCALE: 1" = 1'-0"

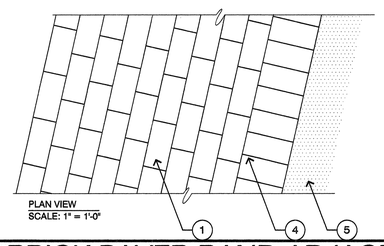

PLAN VIEW
SCALE: 1" = 1'-0"

LEGEND

1. BRICK PAVERS
   BRICK PAVER: OLD TOWNE
   PATTERN: RUNNING BOND
   AVAILABLE FROM: PALMETTO BRICK COMPANY, (800)922-4423
2. SAND SETTING BED
3. JOINTS AS TIGHT AS POSSIBLE
4. BRICK PAVER BAND
   BRICK PAVER: OLD TOWNE
   PATTERN: SOLDIER COURSE BAND
   AVAILABLE FROM: PALMETTO BRICK COMPANY, (800)922-4423
5. ADJACENT PAVING
6. AGGREGATE SUB-BASE MATERIAL
7. COMPACTED SUBGRADE
8. EXPANSION JOINT

NOTE:
- REFER TO SOIL ENGINEER'S REPORT FOR MINIMUM THICKNESS OF CONCRETE, SIZING OF REINFORCING STEEL, RECOMMENDED SUB-BASE MATERIAL AND SUBGRADE COMPACTION REQUIREMENTS

3 | BRICK PAVER BAND ADJACENT TO CONCRETE FIELD

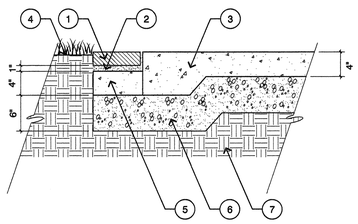

SECTION VIEW
SCALE: 1" = 1'-0"

LEGEND

1. BRICK PAVER BAND
   BRICK PAVER: OLD TOWNE
   BAND PATTERN: SOLDIER COURSE
   AVAILABLE FROM: PALMETTO BRICK, (800)922-4423
2. 1" MORTAR SETTING BED
3. CONCRETE PAVING FIELD
   FINISH: SHELL TABBY
4. FINISH GRADE
5. 4" CONCRETE SUB-SLAB
6. AGGREGATE SUB-BASE MATERIAL
7. COMPACTED SUBGRADE

MIHALY
LAND DESIGN
PLANNING + LANDSCAPE ARCHITECTURE
330 Military Cutoff Rd. Suite A3
Wilmington, NC 28403 910.392.4355

NORTH CAROLINA LICENSED LANDSCAPE ARCHITECT
JOSHUA W. MIHALY

Revisions

CLIENT
AUTUMN HALL DVC, LLC
1201 EASTWOOD ROAD
WILMINGTON, NC 28403
PHONE: 910.799.8755

PROJECT
DUNGANNON VILLAGE
AUTUMN HALL
WILMINGTON, NC
LANDSCAPE PLAN

Date:	03/09/2016
Phase:	
Job Number:	400-17
Designed by:	MLD
Drawn by:	MAS
Checked by:	JWM

Sheet Title:
LANDSCAPE DETAILS

Sheet Number
L1.1
of 2 sheets