DREAMS PARKING AREA STORMWATER IMPROVEMENTS

901 FANNING STREET, WILMINGTON, NC 28501

PROJECT DESIGN CONTACTS	
DESIGN ENGINEER	JONATHAN PAGE, EI NC STATE UNIVERSITY 3100 CAMPUS BOX 7625 RALEIGH, NC 27695 (919) 515-8595 jlpage3@ncsu.edu
ENGINEER OF RECORD	ANDREW ANDERSON, PE NC STATE UNIVERSITY 3100 CAMPUS BOX 7625 RALEIGH, NC 27695 (919) 515-8595 arander@ncsu.edu

SITE DATA TABULATION	
PROPERTY OWNER	CITY OF WILMINGTON
LOCATION	N 34° 14' 42.2" W 77° 56' 15.3"
PHYSICAL ADDRESS	901 FANNING STREET WILMINGTON, NC 28401
PARCEL NUMBER	R04814-001-001-000
PARCEL AREA	7.74 AC
ZONING	O & I - 1
CAMA LAND CLASS	DEVELOPED
LIMITS OF DISTURBANCE	0.69 AC
PRE - CON. IMP. AREA	3.2 AC (41%)
POST- CON. IMP. AREA	3.2 AC (41%)
MIN. PARKING REQUIRED	70 SPACES
MAX. PARKING REQUIRED	94 SPACES
OFF STREET PARKING	7 SPACES
PARKING PROVIDED	37 SPACES

VICINITY MAP

PLAN SHEET KEY	
	LIGHT POLE
	YARD INLET
	FIRE HYDRANT
	SANITARY SEWER MANHOLE
	STORM DRAIN MANHOLE
	CATCH BASIN
	LIMITS OF DISTURBANCE (LOD)
	SILT FENCE
	BMP CONNECTION PIPE
	BMP UNDERDRAIN
	STORM DRAIN PIPE
	SANITARY SEWER PIPE
	PERMEABLE PAVEMENT
	LANDSCAPED AREA
	TURF GRASS

INDEX

SHEET #	SHEET DESCRIPTION
1	TITLE SHEET
2	VICINITY MAP
3	EXISTING CONDITIONS
4	E & SC PLAN
5	PROPOSED LAYOUT
6	GRADING PLAN
7	SECTION VIEWS
8	SCM DETAILS
9	DETAILS
10	DETAILS
11	QUANTITIES AND NOTES

DREAMS PARKING AREA
STORMWATER IMPROVEMENTS
CITY OF WILMINGTON
PLANNING REVIEW

PLAN TYPE: TITLE SHEET

SHEET NUMBER: 1 OF 11

NCSU BAE
WEAVER ADMIN. BLD.
3100 FAUCETTE DRIVE
RALEIGH, NC 27695
919-515-6803

NC STATE UNIVERSITY Bio&Ag ENGINEERING

NORTH CAROLINA PROFESSIONAL SEAL 042555 ENGINEER ANDREW R. ANDERSON

PROJECT PARTNERS: WRRI NCDENR CITY OF WILMINGTON NORTH CAROLINA

DRAWN : J.L. PAGE
DESIGN : J.L. PAGE
CHECK : W.F. HUNT
APPROVED :

PROJECT NAME : DREAMS SW IMPRV.
SCALE : AS NOTED
DATE : AUG 27, 2015

PROJECT # 557683
PHASE # 02249

PARCEL ID

ADDRESS	OWNER	PIN	ZONING	LAND USE
1001 HALL STREET	SPICER DERSERAUX BARBARA	R04810-009-005-000	R-3	10-1
1100 MCRAE STREET	NEW HAN CNTY BD OF EDUCATION	R04809-027-010-000	O&I-1	821
620 N 10TH STREET	HUMPHREY ROSLYN HRS	R04814-010-001-000	R-3	10-1
623 N 10TH STREET	METRO PROP OF WILMINGTON LLC	R04814-009-012-000	R-3	958
702 N 10TH STREET	FONTAINE DARREN	R04814-007-012-000	R-3	10-1
704 N 10TH STREET	HILL CONSTRUCTION LLC	R04814-007-011-000	R-3	10-1
706 N 10TH STREET	NORTH METRO PROP LLC	R04814-007-010-000	R-3	10-1
708 N 10TH STREET	HARDY BERNARD L & GLADYS S	R04814-007-008-000	R-3	10-1
710 N 10TH STREET	HARDY BERNARD L & GLADYS S	R04814-007-007-000	R-3	10-1
714 N 10TH STREET	SIMPSON RICHARD JR DELORES	R04814-007-004-000	R-3	10-1
716 N 10TH STREET	LABOO FLOYD ETAL	R04814-007-003-000	R-3	10-1
718 N 10TH STREET	SMALL WILLIAM JR	R04814-007-002-000	R-3	10-1
720 N 10TH STREET	SMALL WILLIAM THOMAS II	R04814-007-001-000	R-3	10-1
804 N 10TH STREET	WILMINGTON CITY OF	R04814-002-001-000	R-3	911
900 N 10TH STREET	RMB CITYWIDE ENTERPRISES LLC	R04814-011-010-000	R-3	10-1
902 N 10TH STREET	RMB CITYWIDE ENTERPRISES LLC	R04814-011-009-000	R-3	10-1
904 N 10TH STREET	JAMES ROBERT	R04814-011-008-000	R-3	10-1
908 N 10TH STREET	BROWN REBECCA	R04814-011-006-000	R-3	10-1
910 N 10TH STREET	BROWN REBECCA	R04814-011-005-000	R-3	10-1
916 N 10TH STREET	STRONG DENNIS L PATRICIA A	R04810-011-004-000	R-3	10-1
918 N 10TH STREET	TYSON ANDRIA P	R04810-011-003-000	R-3	10-1
920 N 10TH STREET	PICKETT ANITA LYNNE	R04810-011-002-000	R-3	10-1
922 N 10TH STREET	JAMES DEXTER ETAL	R04810-011-001-001	R-3	10-1
924 N 10TH STREET	INTERCOASTAL HOLDINGS LLC	R04810-011-001-000	R-3	10-1
901 HANOVER STREET	BALLARD CAROLYN Y	R04813-008-002-000	R-3	10-1
902 HANOVER STREET	SMITH CYNTHIA	R04813-021-015-000	R-3	10-1
903 HANOVER STREET	NIXON SANDRA D	R04813-008-003-000	R-3	10-1
904 HANOVER STREET	SMITH CYNTHIA	R04813-021-014-000	R-3	10-1
905 HANOVER STREET	LAHAM KOHAVA	R04813-008-004-000	R-3	10-1
906 HANOVER STREET	TOLLIVER ROSETTA	R04813-021-013-000	R-3	10-1
907 HANOVER STREET	TILLER PERPERTIES LLC	R04813-008-005-000	R-3	10-1
908 HANOVER STREET	DICKEY GLENN	R04814-009-014-000	R-3	10-1
909 HANOVER STREET	WILMINGTON CITY OF	R04813-008-006-000	O&I-1	911
910 HANOVER STREET	DICKEY GLENN	R04814-009-014-000	R-3	10-1
912 HANOVER STREET	SWANSON ERIC J LAVINIA	R04814-009-013-000	R-3	958
617 ANDERSON STREET	MERCER KEVIN	R04813-020-019-000	R-3	958
703 ANDERSON STREET	ELLIOTT WILLIAM S	R04813-009-014-000	R-3	10-1
705 ANDERSON STREET	LOCKHART CHARLES ETAL	R04813-009-015-000	R-3	10-1
707 ANDERSON STREET	MOORE MARY DIXON ETAL	R04813-009-016-000	R-3	10-1
708 ANDERSON STREET	WILMINGTON CITY OF	R04813-008-001-000	O&I-1	911
709 ANDERSON STREET	DAYE ROGER A	R04813-009-017-000	R-3	10-1
713 ANDERSON STREET	NIXON ROMONA J	R04813-009-018-000	R-3	10-1
715 ANDERSON STREET	MOORE GLENDA G	R04813-009-019-000	R-3	10-1
801 ANDERSON STREET	CLAY LILLIE MAE ETAL	R04813-007-009-000	R-3	958
803 ANDERSON STREET	BROWN VERONICA C	R04813-007-010-000	R-3	958
805 ANDERSON STREET	UTLEY JAMES JR MAXINE R	R04813-007-011-000	R-3	958
807 ANDERSON STREET	BOWERS CYNTHIA GAIL	R04813-007-012-000	R-3	10-1
809 ANDERSON STREET	THOMAS RICARDO	R04813-007-013-000	R-3	958
821 ANDERSON STREET	SEALE WILLIAM L II	R04809-049-002-000	R-3	958
836 FANNING STREET	PEOPLES MALVENIA	R04813-009-020-000	R-3	10-1
901 FANNING STREET	WILMINGTON CITY OF	R04814-001-001-000	O&I-1	911
906 FANNING STREET	WILMINGTON CITY OF	R04814-001-001-000	O&I-1	911

VICINITY MAP

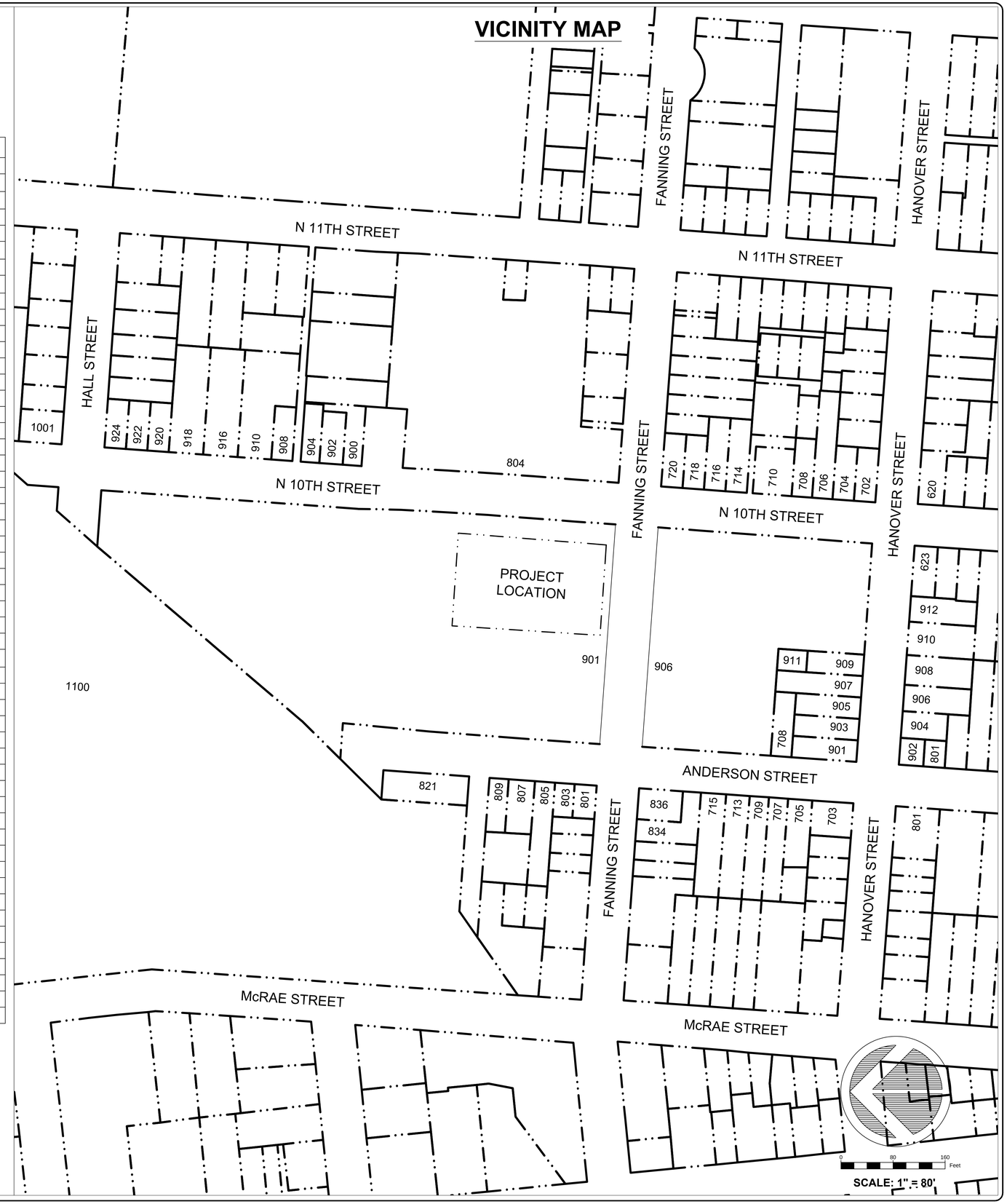

DREAMS PARKING AREA
STORMWATER IMPROVEMENTS
CITY OF WILMINGTON
PLANNING REVIEW

PLAN TYPE: VICINITY MAP

SHEET NUMBER: 2 OF 11

NCSU BAE
WEAVER ADMIN. BLD.
3100 FAUCETTE DRIVE
RALEIGH, NC 27695
919-515-6803

NC STATE UNIVERSITY Bio&Ag ENGINEERING

NORTH CAROLINA PROFESSIONAL SEAL 042555 ENGINEER ANDREW R. JOHNSON

PROJECT PARTNERS: WRRI NCDENR CITY OF WILMINGTON NORTH CAROLINA

DRAWN :	J.L. PAGE
DESIGN :	J.L. PAGE
CHECK :	W.F. HUNT
APPROVED :	
PROJECT NAME :	DREAMS SW IMPRV.
SCALE :	1" = 80'
DATE :	AUG 27, 2015

PROJECT # 557683
PHASE # 02249

EXISTING CONDITIONS

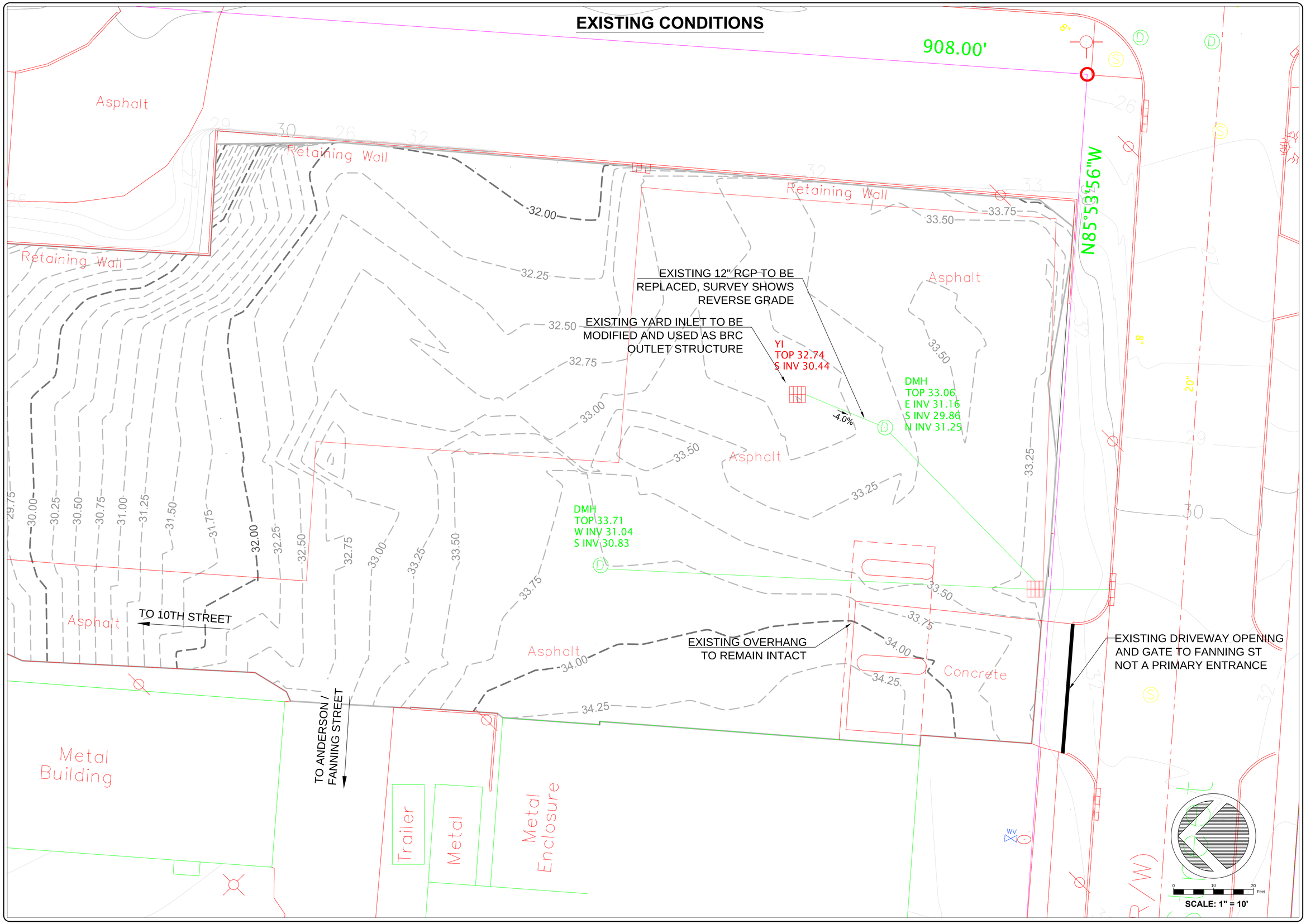

DREAMS PARKING AREA
STORMWATER IMPROVEMENTS
CITY OF WILMINGTON
PLANNING REVIEW

SHEET NUMBER: 3 OF 11

PLAN TYPE: EXISTING COND.

NCSU BAE
WEAVER ADMIN. BLD.
3100 FAUCETTE DRIVE
RALEIGH, NC 27695
919-515-6803

NC STATE UNIVERSITY Bio&Ag ENGINEERING

NORTH CAROLINA PROFESSIONAL SEAL 042555 ENGINEER ANDREW R. ANDERSON

PROJECT PARTNERS: WRRI NCDENR CITY OF WILMINGTON NORTH CAROLINA

DRAWN :	J.L. PAGE
DESIGN :	J.L. PAGE
CHECK :	W.F. HUNT
APPROVED :	

PROJECT NAME :	DREAMS SW IMPRV.
SCALE :	1" = 10'
DATE :	AUG 27, 2015

PROJECT # 557683
PHASE # 02249

EROSION AND SEDIMENT CONTROL PLAN

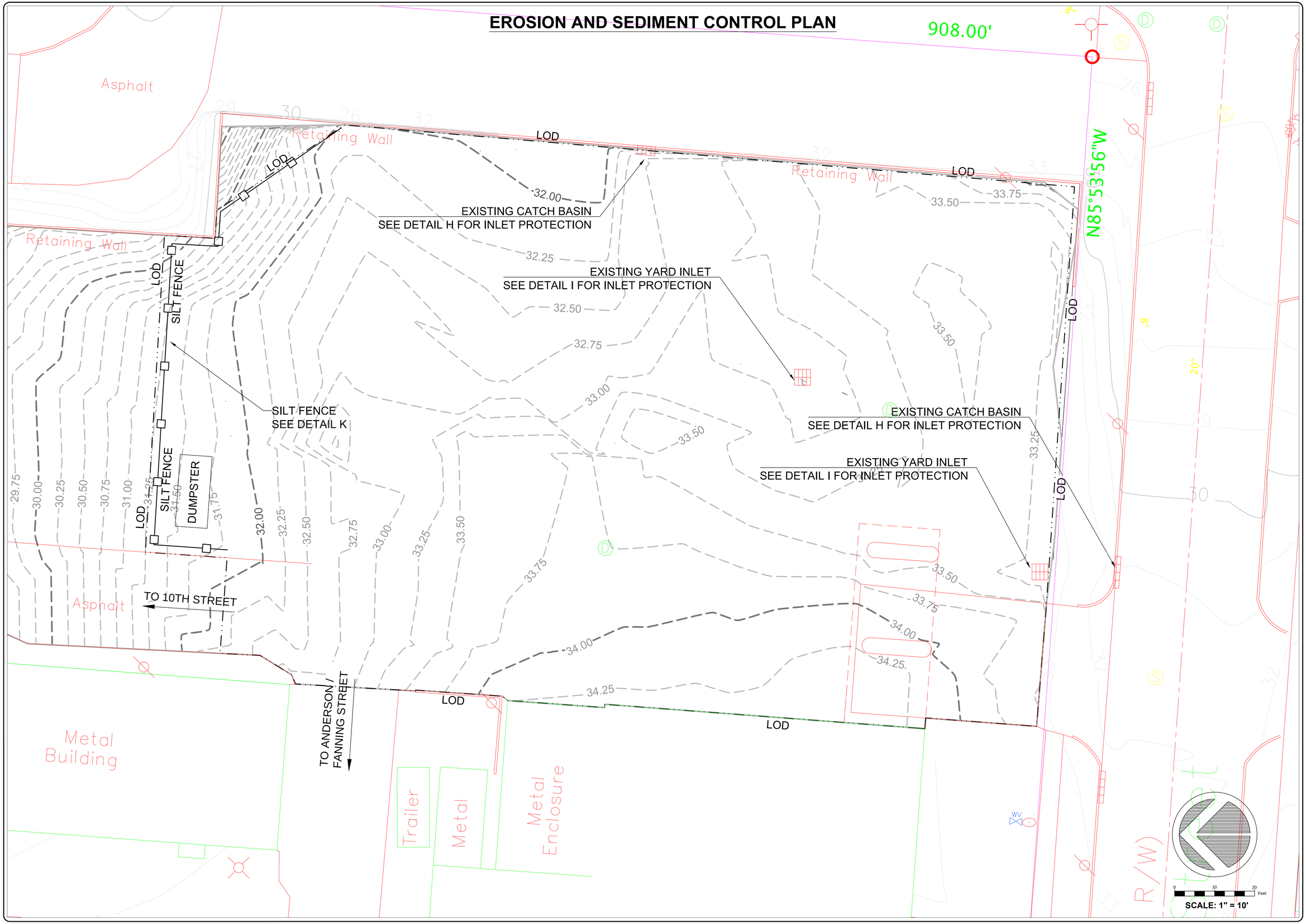

DREAMS PARKING AREA
STORMWATER IMPROVEMENTS
CITY OF WILMINGTON
PLANNING REVIEW

SHEET NUMBER 4 OF 11

PLAN TYPE: E & SC

NCSU BAE
WEAVER ADMIN. BLD.
3100 FAUCETTE DRIVE
RALEIGH, NC 27695
919-515-6803

NC STATE UNIVERSITY Bio&Ag ENGINEERING

NORTH CAROLINA PROFESSIONAL SEAL 042555 ENGINEER ANDREW R. ANDERSON

PROJECT PARTNERS: WRRI NCDENR CITY OF WILMINGTON NORTH CAROLINA

DRAWN :	J.L. PAGE
DESIGN :	J.L. PAGE
CHECK :	W.F. HUNT
APPROVED :	
PROJECT NAME :	DREAMS SW IMPRV.
SCALE :	1" = 10'
DATE :	AUG 27, 2015

PROJECT # 557683
PHASE # 02249

PROPOSED LAYOUT

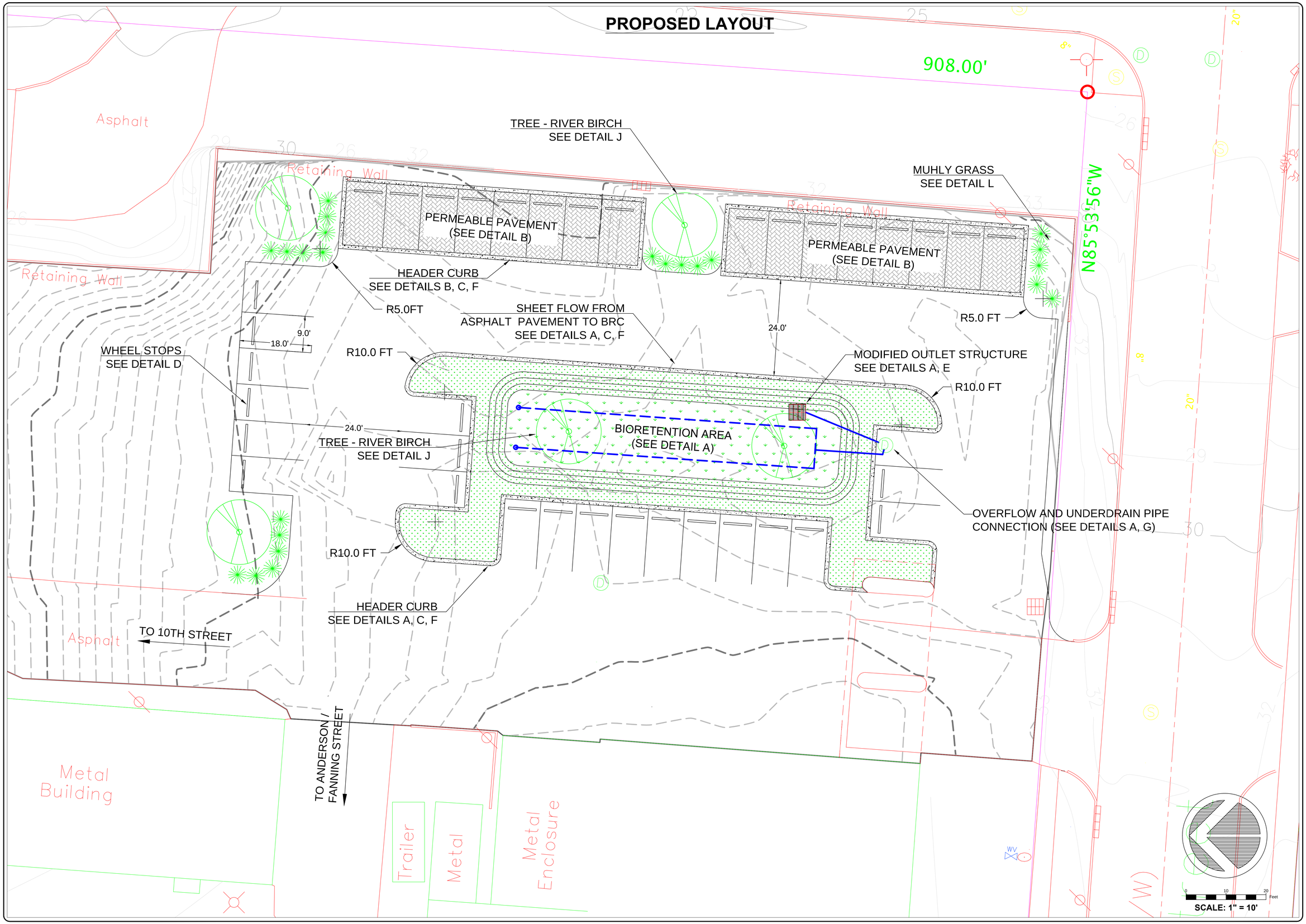

DREAMS PARKING AREA
STORMWATER IMPROVEMENTS
CITY OF WILMINGTON
PLANNING REVIEW

SHEET NUMBER
5 OF 11

PLAN TYPE:
PROPOSED

NCSU BAE
WEAVER ADMIN. BLD.
3100 FAUCETTE DRIVE
RALEIGH, NC 27695
919-515-6803

NC STATE UNIVERSITY
Bio&Ag
ENGINEERING

NORTH CAROLINA PROFESSIONAL SEAL 042555 ENGINEER ANDREW R. WOODRUFF

PROJECT PARTNERS:
WRRI
NCDENR
CITY OF WILMINGTON NORTH CAROLINA

DRAWN : J.L. PAGE
DESIGN : J.L. PAGE
CHECK : W.F. HUNT
APPROVED :

PROJECT
NAME : DREAMS SW IMPRV.
SCALE : 1" = 10'
DATE : AUG 27, 2015

PROJECT # 557683
PHASE # 02249

GRADING PLAN

EARTH WORK SUMMARY	
TOTAL CUT	+445 CY
TOTAL FILL	-205 CY
NET	+240 CY

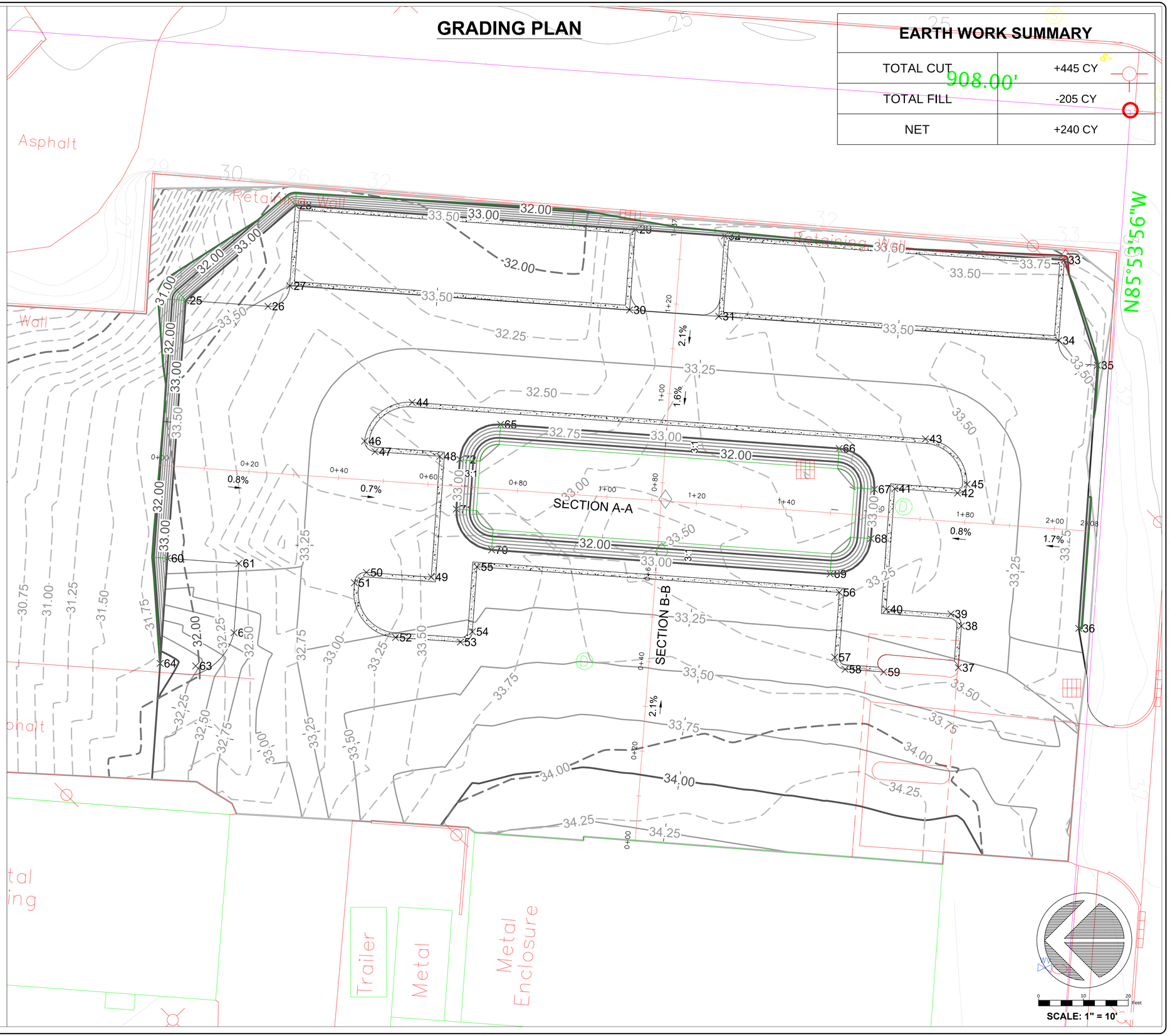

Point Table

Point #	Elevation	Northing	Easting	Description
25	33.50	4585.86	5181.72	EOP
26	33.48	4584.56	5200.07	EOP
27	33.50	4589.13	5204.91	EOP
28	33.50	4607.08	5206.18	EOP
29	33.50	4601.69	5281.99	EOP
30	33.50	4583.74	5280.72	EOP
31	33.50	4582.33	5300.58	EOP
32	33.50	4600.28	5301.86	EOP
33	33.00	4594.89	5377.67	EOP
34	33.50	4576.94	5376.39	EOP
35	33.50	4571.41	5385.02	EOP
36	33.50	4512.73	5380.85	EOP
37	33.28	4503.96	5354.02	EOP
38	33.17	4513.27	5354.68	EOP
39	33.16	4515.94	5352.36	EOP
40	33.11	4516.97	5337.90	EOP
41	33.03	4543.90	5339.82	EOP
42	33.14	4542.91	5353.82	EOP
43	33.13	4554.99	5346.67	EOP
44	33.13	4563.12	5232.23	EOP
45	33.16	4544.87	5355.96	EOP
46	33.16	4554.49	5221.61	EOP
47	33.14	4552.14	5223.93	EOP
48	33.03	4551.11	5238.40	EOP
49	33.08	4524.18	5236.48	EOP
50	33.15	4525.21	5222.02	EOP
51	33.16	4522.89	5219.35	EOP
52	33.26	4510.71	5228.51	EOP
53	33.32	4509.69	5242.97	EOP
54	33.28	4512.00	5245.64	EOP
55	33.07	4526.47	5246.67	EOP
56	33.09	4520.75	5327.47	EOP
57	33.37	4506.29	5326.44	EOP
58	33.42	4503.62	5328.76	EOP
59	33.39	4503.01	5337.38	EOP
60	33.50	4528.36	5177.63	EOP
61	33.35	4527.23	5193.59	EOP
62	32.84	4511.77	5192.49	EOP
63	32.22	4504.36	5183.95	EOP
64	31.80	4504.93	5176.02	EOP
65	33.00	4558.22	5251.93	BRC
66	33.00	4552.85	5327.42	BRC
67	33.00	4543.77	5335.29	BRC
68	33.00	4532.75	5334.51	BRC
69	33.00	4524.87	5325.43	BRC
70	33.00	4530.24	5249.94	BRC
71	33.00	4539.32	5242.07	BRC
72	33.00	4550.41	5242.86	BRC

DREAMS PARKING AREA
STORMWATER IMPROVEMENTS
CITY OF WILMINGTON
PLANNING REVIEW

SHEET NUMBER 6 OF 11

PLAN TYPE GRADING

NCSU BAE
WEAVER ADMIN. BLD.
3100 FAUCETTE DRIVE
RALEIGH, NC 27695
919-515-6803

NC STATE UNIVERSITY Bio&Ag ENGINEERING

NORTH CAROLINA PROFESSIONAL SEAL 042555 ENGINEER ANDREW R. ANDERSON

PROJECT PARTNERS: WRRI NCDENR CITY OF WILMINGTON NORTH CAROLINA

DRAWN : J.L. PAGE
DESIGN : J.L. PAGE
CHECK : W.F. HUNT
APPROVED :

PROJECT NAME : DREAMS SW IMPRV.
SCALE : 1" = 10'
DATE : AUG 27, 2015

PROJECT # 557683
PHASE # 02249

Section A-A

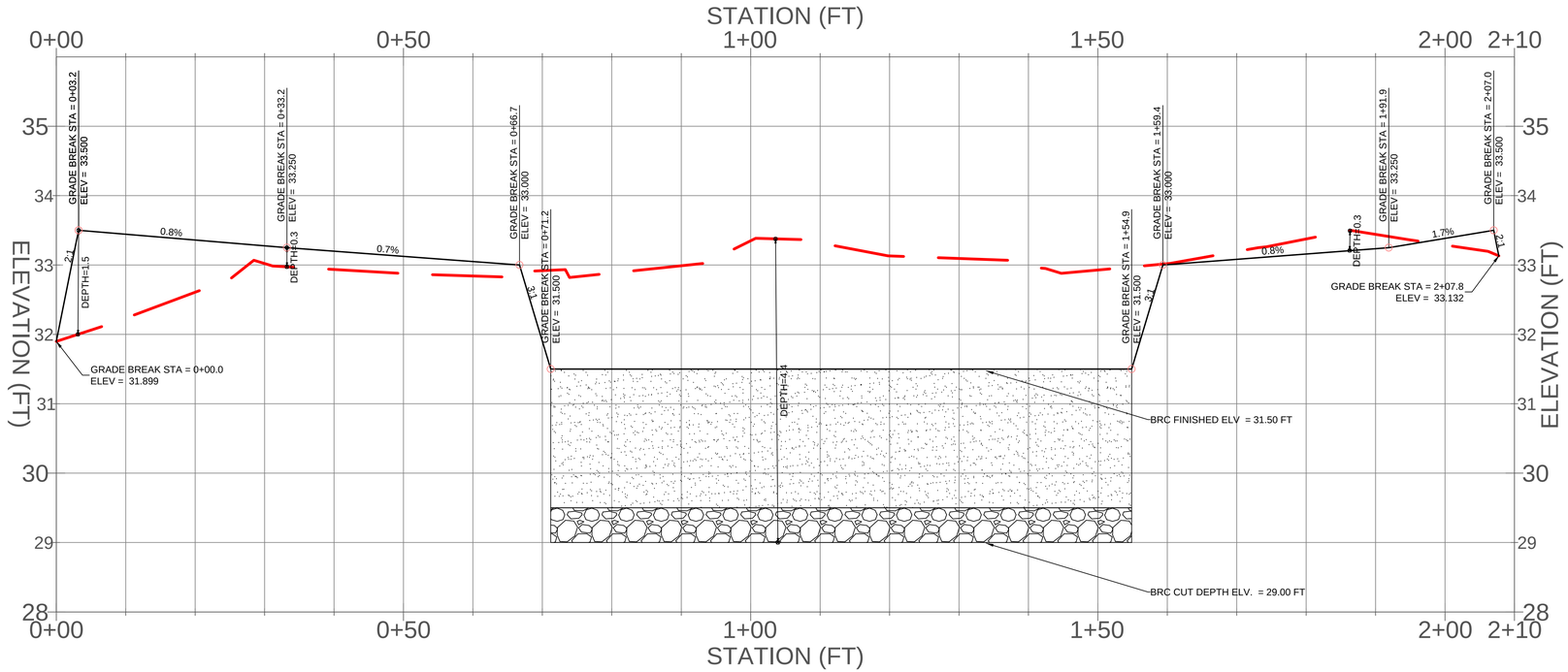

SCALE 1" = 10'
VERTICAL EXG. 1:10

Section B-B

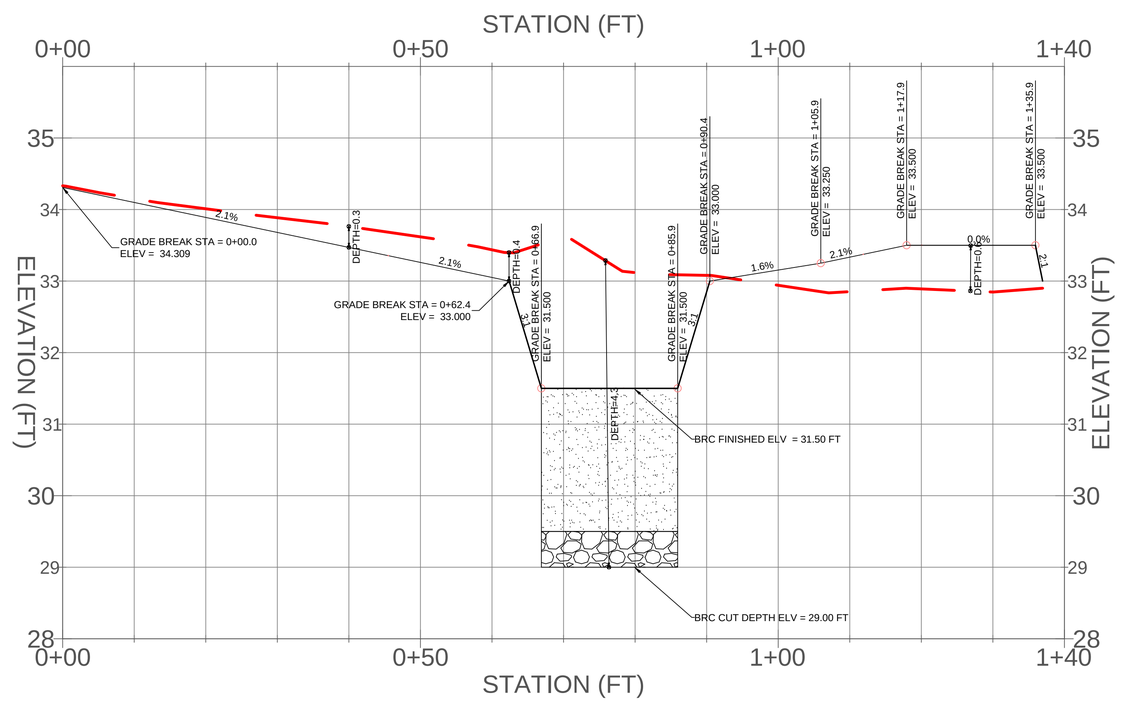

SCALE 1" = 10'
VERTICAL EXG. 1:10

DREAMS PARKING AREA
STORMWATER IMPROVEMENTS
CITY OF WILMINGTON
PLANNING REVIEW

SHEET NUMBER
7 OF 11

PLAN TYPE:
PROFILES

NCSU BAE
WEAVER ADMIN. BLD.
3100 FAUCETTE DRIVE
RALEIGH, NC 27695
919-515-6803

NC STATE UNIVERSITY
Bio&Ag ENGINEERING

NORTH CAROLINA PROFESSIONAL SEAL 042555 ENGINEER ANDREW R. ANDERSSON

PROJECT PARTNERS:
WRRI
NCDENR
CITY OF WILMINGTON NORTH CAROLINA

DRAWN :	J.L. PAGE
DESIGN :	J.L. PAGE
CHECK :	W.F. HUNT
APPROVED :	
PROJECT NAME :	DREAMS SW IMPRV.
SCALE :	1" = 10'
DATE :	AUG 27, 2015

PROJECT # 557683
PHASE # 02249

DETAIL A: BIORETENTION CROSS-SECTION

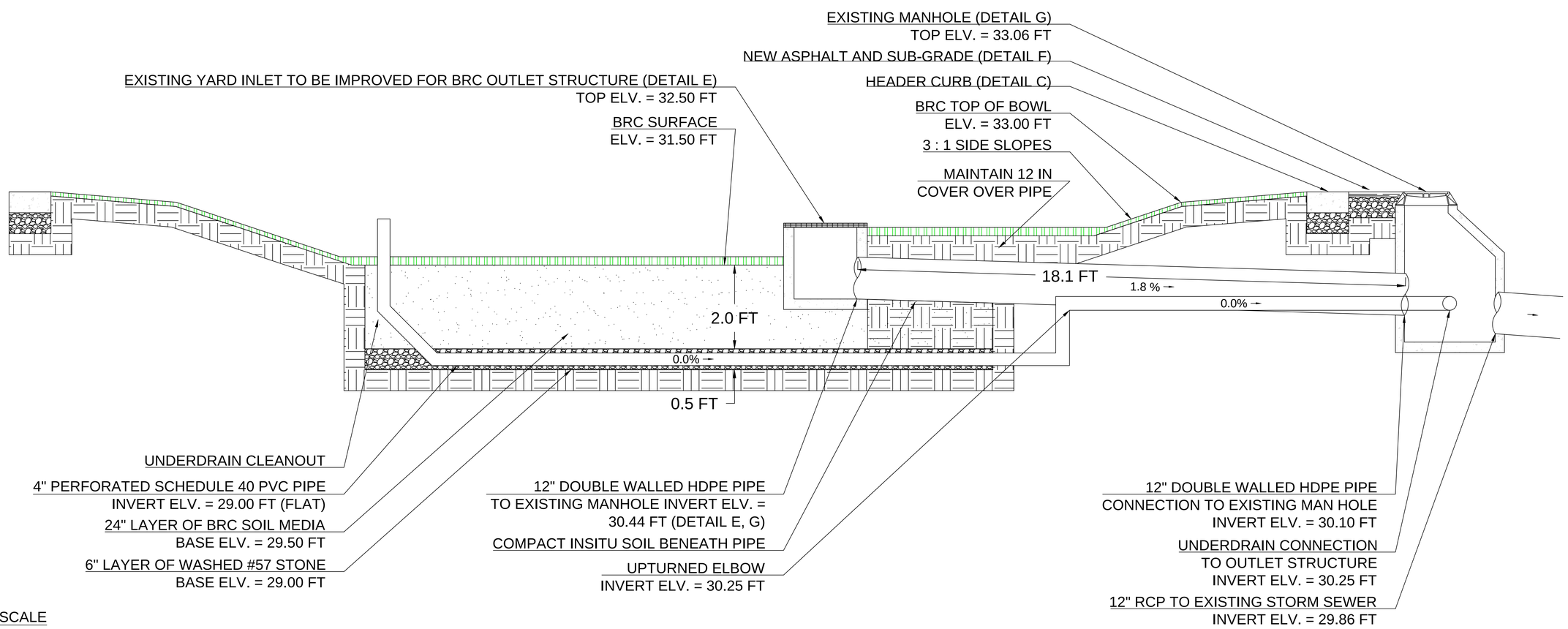

NOT TO SCALE

DETAIL B: PICP PARKING STALLS

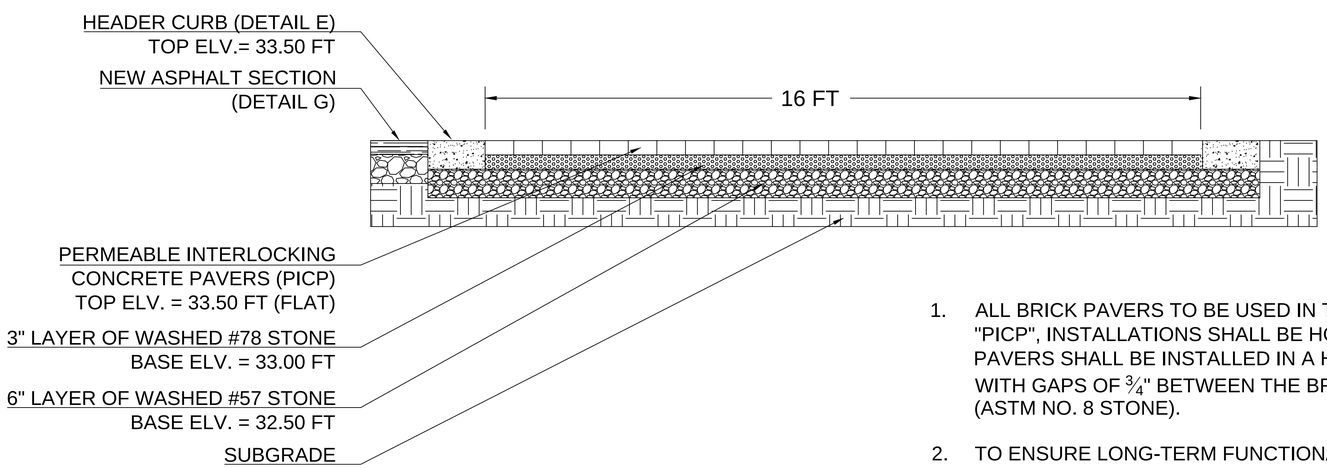

1. ALL BRICK PAVERS TO BE USED IN THE PERMEABLE INTERLOCKING CONCRETE PAVER, OR "PICP", INSTALLATIONS SHALL BE HOLLAND-GUILFORD BLEND STYLE AND COLOR. THE PAVERS SHALL BE INSTALLED IN A HERRINGBONE PATTERN FOR STRUCTURAL INTEGRITY WITH GAPS OF ¾" BETWEEN THE BRICKS, WHICH SHALL BE FILLED BY THE BEDDING LAYER (ASTM NO. 8 STONE).
2. TO ENSURE LONG-TERM FUNCTIONALITY OF PERMEABLE PAVEMENT, STREET SWEEPING SHOULD BE PERFORMED A MINIMUM OF TWO TIMES PER YEAR OVER THE PICP SYSTEMS WITH A REGENERATIVE AIR STREET SWEEPER

NOT TO SCALE

DREAMS PARKING AREA
STORMWATER IMPROVEMENTS
CITY OF WILMINGTON
PLANNING REVIEW

SHEET NUMBER: 8 OF 11

PLAN TYPE: DETAILS

NCSU BAE
WEAVER ADMIN. BLD.
3100 FAUCETTE DRIVE
RALEIGH, NC 27695
919-515-6803

NC STATE UNIVERSITY Bio&Ag ENGINEERING

NORTH CAROLINA PROFESSIONAL SEAL 042555 ENGINEER ANDREW R. PAGE

PROJECT PARTNERS: WRRI NCDENR CITY OF WILMINGTON NORTH CAROLINA

DRAWN :	J.L. PAGE
DESIGN :	J.L. PAGE
CHECK :	W.F. HUNT
APPROVED :	
PROJECT NAME :	DREAMS SW IMPRV.
SCALE :	NOT TO SCALE
DATE :	AUG 27, 2015

PROJECT # 557683
PHASE # 02249

DETAIL C: HEADER CURB

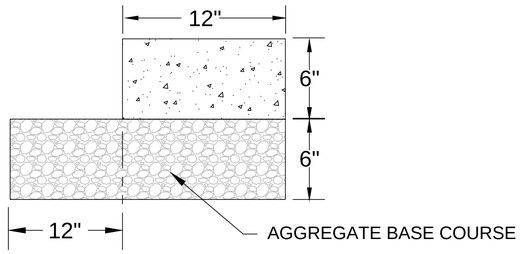

NOTES: 1. EXPANSION JOINT MATERIAL TO COMPLY WITH CURRENT NCDOT STANDARDS
2. 50' MAX EXPANSION JOINT SPACING, 10' MAX CONTRACTION JOINT SPACING
3. MINIMUM INSTALLATION LENGTH IS 5 FT.
4. CONCRETE TO BE 3000 PSI MIN
5. VERTICAL CURB AND GUTTER BASE CAN BE SLOPED 3/4" OR USE A FLAT BASE

NOT TO SCALE

DETAIL D: WHEEL STOP

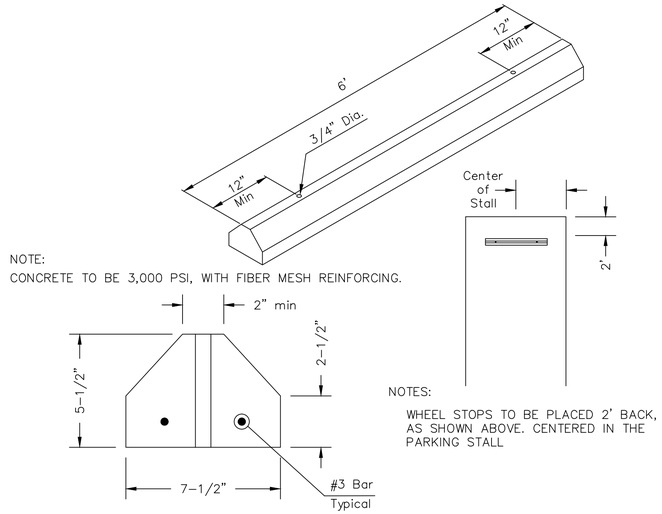

NOTE:
CONCRETE TO BE 3,000 PSI, WITH FIBER MESH REINFORCING.

NOTES:
WHEEL STOPS TO BE PLACED 2' BACK, AS SHOWN ABOVE. CENTERED IN THE PARKING STALL

NOT TO SCALE

DETAIL E: BRC OUTLET STRUCTURE

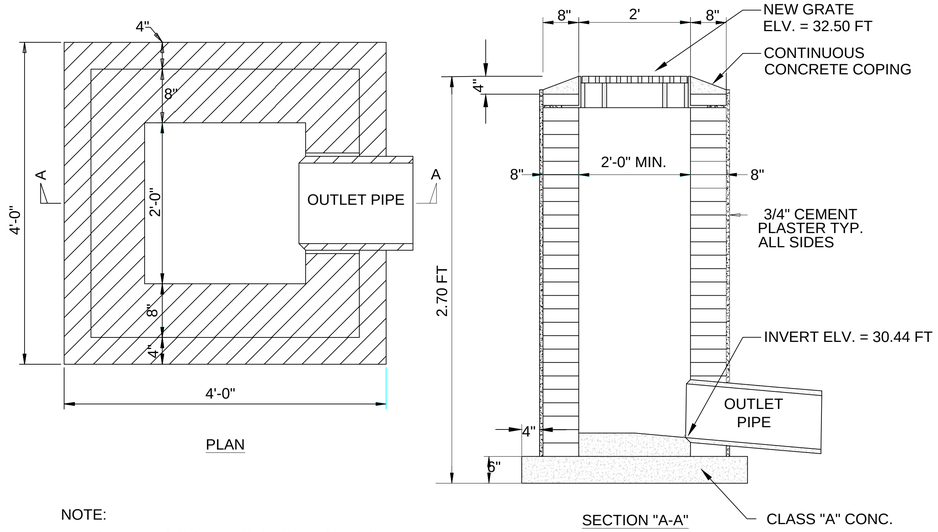

NOTE:
FRAME AND GRATE TO BE STANDARD CITY OF WILMINGTON CAST IRON FRAME AND GRATE PER SD 14-04

NOT TO SCALE

DETAIL F: PARKING AREA ASPHALT PAVEMENT SECTION

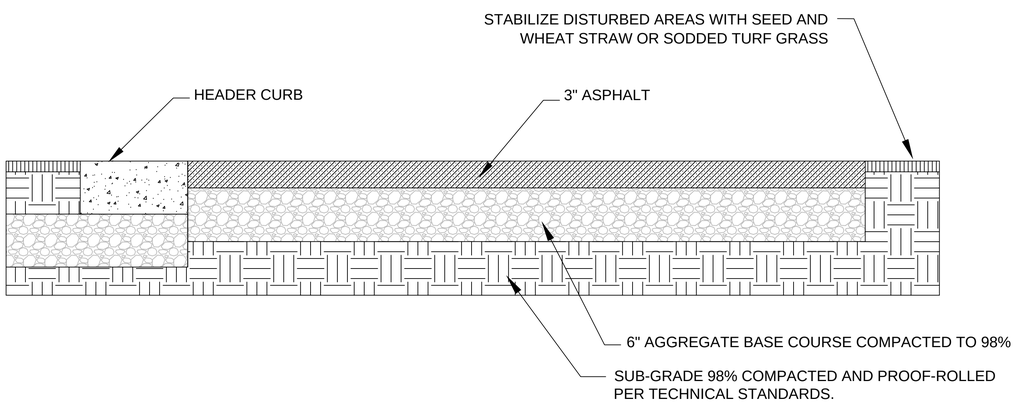

NOT TO SCALE

DETAIL G: CONNECTION TO STORM SEWER NETWORK

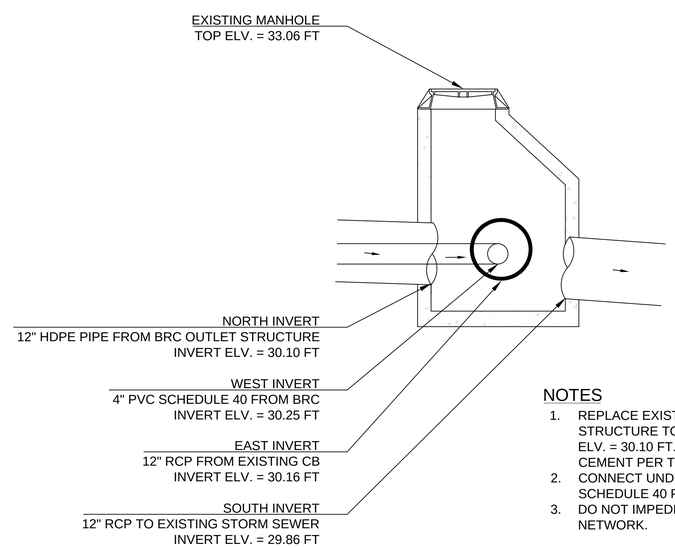

NOTES
1. REPLACE EXISTING RCP PIPE (REVERSE GRADE) FROM BRC OUTLET STRUCTURE TO EXISTING MANHOLE WITH 12" HDPE PIPE. PIPE INVERT ELV. = 30.10 FT. SEAL OPENING WITH CONCRETE AND / OR HYDRAULIC CEMENT PER THE ENGINEER'S DIRECTION ONSITE.
2. CONNECT UNDERDRAIN FROM BRC TO EXISTING MANHOLE WITH 4 IN SCHEDULE 40 PVC PIPE. INVERT ELV. = 30.25 FT.
3. DO NOT IMPEDE FLOW TO 12 IN RCP PIPE TO EXISTING STORM SEWER NETWORK.

NOT TO SCALE

DREAMS PARKING AREA
STORMWATER IMPROVEMENTS
CITY OF WILMINGTON
PLANNING REVIEW

SHEET NUMBER 9 of 11

PLAN TYPE: DETAILS

NCSU BAE
WEAVER ADMIN. BLD.
3100 FAUCETTE DRIVE
RALEIGH, NC 27695
919-515-6803

NC STATE UNIVERSITY Bio&Ag ENGINEERING

NORTH CAROLINA PROFESSIONAL SEAL 042555 ENGINEER ANDREW R. ANDERSON

PROJECT PARTNERS: WRRI NCDENR CITY OF WILMINGTON NORTH CAROLINA

DRAWN :	J.L. PAGE
DESIGN :	J.L. PAGE
CHECK :	W.F. HUNT
APPROVED :	
PROJECT NAME :	DREAMS SW IMPRV.
SCALE :	NOT TO SCALE
DATE :	AUG 27, 2015

PROJECT # 557683
PHASE # 02249

DETAIL H: CATCH BASIN PROTECTION

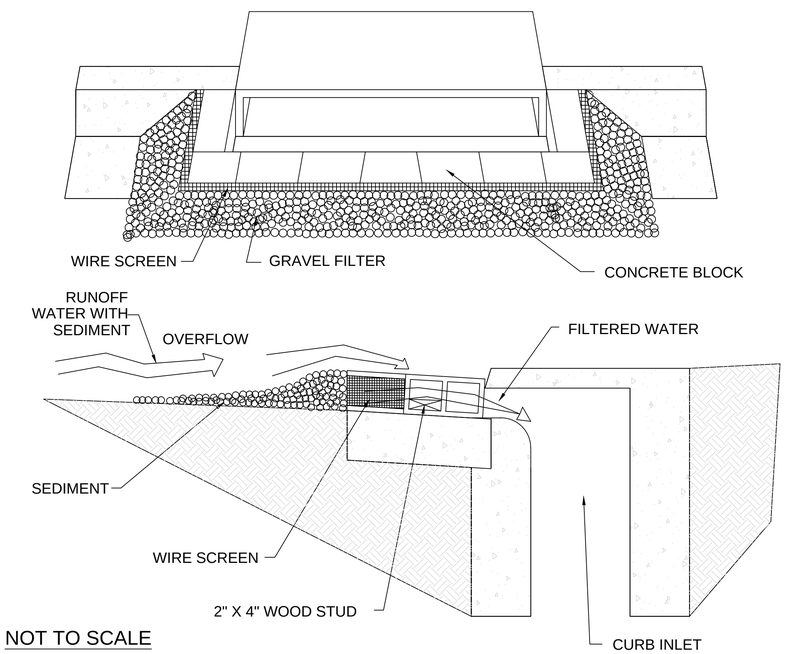

NOT TO SCALE

DETAIL I: GRILL BASIN PROTECTION

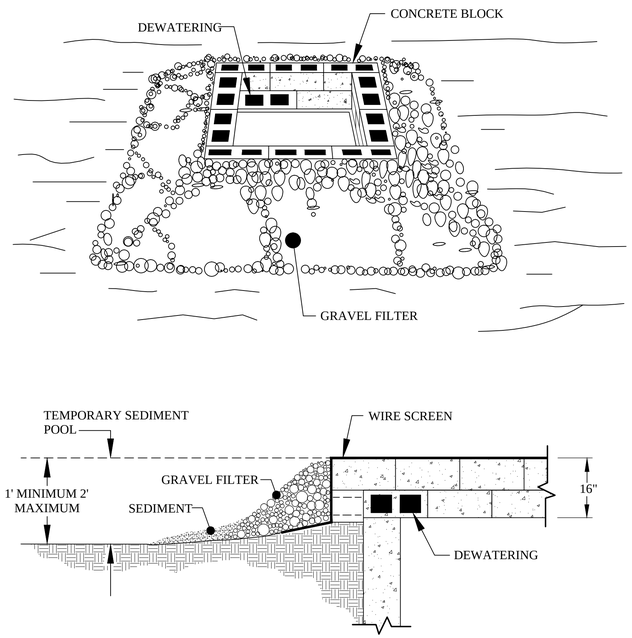

NOT TO SCALE

DETAIL J: TREE INSTALLATION

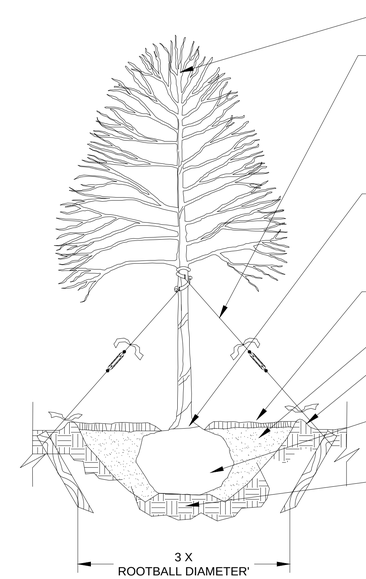

DO NOT PRUNE LEADER. PRUNE OR CUT ONLY DEAD OR UNHEALTHY BRANCHES

PROVIDE STAKING IF SPECIFIED. IF STAKING IS PROVIDED, PROTECT TREE WITH BROAD STRAP OR FLEXIBLE TUBING. ALLOW FLEXIBILITY IN STRAPS TO DEVELOP TRUNK TAPER. PROVIDE TURN BUCKLE AND WARNING FLAGS. REMOVE ALL STAKING AND ACCESSORIES WITHIN ONE YEAR FROM PLANTING.

THE ROOT FLARE SHALL BE PLANTED AT GRADE, NO HIGHER THAN 2" ABOVE GRADE, AND NEVER BELOW GRADE. REMOVE EXCESS SOIL TO EXPOSE THE ROOT FLARE AT GRADE. TREE SHALL BE SET PLUMB

MULCH DEPTH 3". KEEP MULCH 3" FROM ROOT FLARE AND DO NOT CONTACT STEM

HIGH QUALITY SOIL MIX AS SPECIFIED

WATER SAUCER SHALL BE NO MORE THAN 3" ABOVE GRADE

COMPLETELY REMOVE TOP HALF OF BURLAP, LACING AND WIRE BASKET AND DISCARD FROM HOLE

ROOT BALL SHALL BE PLACED DIRECTLY ON SUBGRADE. HANDLE TREE BY THE ROOT BALL ONLY.

NOT TO SCALE

DETAIL K: TEMPORARY SILT FENCE INSTALL

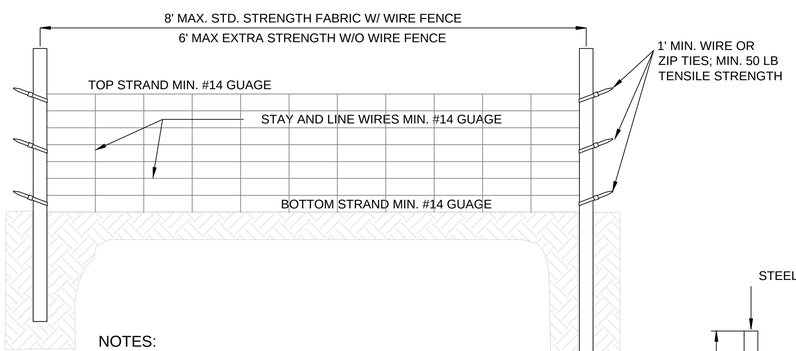

NOTES:

1. WIRE FENCE (IF USED) SHALL BE MINUMUM 14 GAUGE WITH A MAXIMUM MESH OPENING OF 6-INCHES.

2. SYNTHETIC FILTER FABRIC OF AT LEAST 95% BY WEIGHT OF POLYOLEFINS OR POLYESTER, WHICH IS CERTIFIED BY THE MANUFACTURER OR SUPPLIER AS CONFORMING TO THE REQUIREMENTS IN ASTM D 6461 AND ALSO SHOULD CONTAIN ULTRAVIOLET RAY INHIBITORS AND STABILIZERS ACCORDING TO ASTM D 4355.

3. SEE THE NC EROSION CONTROL MANUAL FOR SPECIFICATIONS INSTALLING SEDIMENT FENCE USING THE SLICING METHOD MACHINERY.

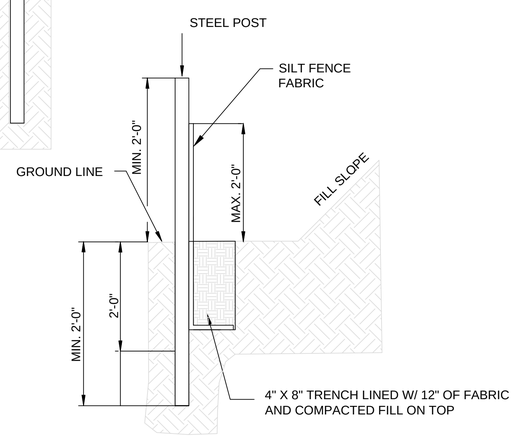

NOT TO SCALE

DETAIL L: SHRUB / PLANT INSTALLATION

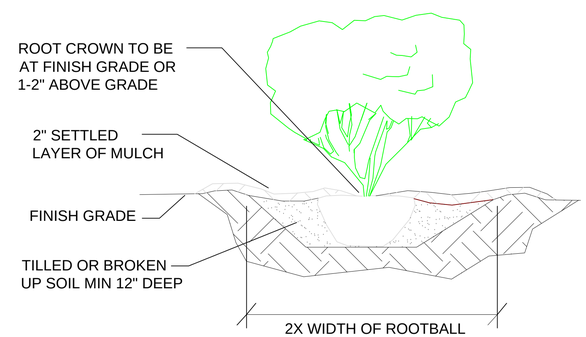

NOTES: TYPICAL SHURB PLANTING, INDIVIDUAL PLANTING HOLE

1. DIG PLANTING HOLE AT LEAST 2X THE WIDTH OF THE ROOT BALL OR CONTAINER.
2. SCARIFY SUBGRADE AND SIDES OF PLANTING HOLE WHEN PLANTING IN CLAY SOIL.
3. SET THE TOP OF THE ROOT BALL LEVEL WITH THE SOIL SURFACE, OR 1-2" ABOVE IF THE SOIL IS PRONE TO SETTLING.
4. IF CONTAINER GROWN PLANT, GENTLY SLIDE PLANT OUT OF CONTAINER. DISTURB THE ROOTS.
5. IF B&B PLANT, REMOVE BURLAP FROM AT LEAST THE TOP 12 INCHES OF THE ROOTBALL, WITHOUT DISTURBING THE ROOTBALL.
6. BACK FILL THE PLANTING HOLE WITH EXCAVATED NATIVE SOIL, BROKEN UP OR TILLED. WATER TO REMOVE AIR POCKETS. DO NOT ADD AMENDMENTS.
7. PLACE BARK MULCH ON THE SURFACE TO A (SETTLED) DEPTH OF 1 TO 3 INCHES.

NOT TO SCALE

DREAMS PARKING AREA
STORMWATER IMPROVEMENTS
CITY OF WILMINGTON
PLANNING REVIEW

SHEET NUMBER: 10 OF 11

PLAN TYPE: DETAILS

NCSU BAE
WEAVER ADMIN. BLD.
3100 FAUCETTE DRIVE
RALEIGH, NC 27695
919-515-6803

NC STATE UNIVERSITY Bio&Ag ENGINEERING

NORTH CAROLINA PROFESSIONAL SEAL 042555 ENGINEER ANDREW R. JOHNSON

PROJECT PARTNERS: WRRI NCDENR CITY OF WILMINGTON NORTH CAROLINA

DRAWN :	J.L. PAGE
DESIGN :	J.L. PAGE
CHECK :	W.F. HUNT
APPROVED :	
PROJECT NAME :	DREAMS SW IMPRV.
SCALE :	NOT TO SCALE
DATE :	AUG 27, 2015

PROJECT # 557683
PHASE # 02249

CONSTRUCTION QUANTITIES

ITEM	QUANTITY	UNITS	NOTES
TEMPORARY SILT FENCE	150	LF	E & SC.
SILT FENCE OUTLET	1	EA	E & SC.
CB / INLET PROTECTION	3	EA	E & SC.
EARTHWORK	650	CY	CUT: 445 CY, FILL: 205 CY, NET: -240 CY
12" HDPE DOUBLE WALL PIPE	20	LF	FROM BRC OUTLET STRUCTURE
4" PERFORATE PVC - SCHEDULE 40	160	EA	BRC UNDERDRAIN
4" PVC - SCHEDULE 40	20	LF	CONNECTION FROM UNDERDRAIN TO EXISTING MANHOLE
BRC FILL MEDIA	160	TONS	BRC, 120 CY
TRIPLE SHREDDED MULCH	8	TONS	BRC AND LANDSCAPED AREAS, 20 CY
PERMEABLE PAVERS	2400	SF	PICP, HERRING BONE PATTERN EAST PARKING SPACES
HEADER CURB	820	LF	INSTALLED AROUND PICP AND BRC PERIMETER
WASHED #57 STONE	105	TONS	PICP BASE COURSE, BRC DRAINAGE LAYER, 75 CY
WASHED #78 STONE	32	TONS	PICP BEDDING COURSE, 22 CY
NEW ASPHALT PAVEMENT	350	TONS	18,500 SF AT 3 INCH THICKNESS, ASSUMES ALL NEW ASPHALT
AGGREGATE BASE COURSE (ABC)	390	TONS	300 CY AT 6 INCH THICKNESS FOR NEW PAVEMENT, ALSO INCLUDES ROCK FOR CURBS
CURB STOPS	37	LBS	PARKING STOPS
PAVEMENT STRIPING - PARKING STALLS	35	EA	PARKING STALL MARKINGS
PAVEMENT STRIPING - LANE ARROWS	8	EA	DIRECTIONAL ARROWS IN THE DRIVING LANES
LANDSCAPE TREES-RIVER BIRCH	5	EA	LANDSCAPED AREAS, BRC
LANDSCAPE PLANTS-MUHLY GRASS	25	EA	LANDSCAPED AREAS
TURF GRASS-ZOYSIA OR CENTIPEDE SOD	5000	SF	DISTURBED LANDSCAPED AREAS, GRADING SLOPES, BRC SLOPES

CONSTRUCTION NOTES

PERMEABLE PAVEMENT

1. ALL BRICK PAVERS TO BE USED IN THE PERMEABLE INTERLOCKING CONCRETE PAVER, OR "PICP". THE PAVERS SHALL BE INSTALLED IN A HERRINGBONE PATTERN FOR STRUCTURAL INTEGRITY WITH GAPS OF ¾" BETWEEN THE BRICKS, WHICH SHALL BE FILLED BY THE BEDDING LAYER (ASTM NO. 78 STONE).
2. BRICKS SHALL HAVE CHAMFERS ON THE EDGES OF THE WEARING SURFACE.
3. THE SUBGRADE BENEATH THE PAVER SYSTEM SHALL BE SCARIFIED BY RAKING THE IN-SITU SOIL WITH EXCAVATOR TEETH. SCARIFICATION SHOULD OCCUR JUST AFTER EXCAVATION AND JUST BEFORE PLACEMENT OF THE AGGREGATE.
4. THE SUBGRADE (BOTTOM OF EXCAVATION) FOR EACH PICP SYSTEM SHOULD BE FLAT WITH RESPECT TO THE ROAD CROWN AS SHOWN IN THE PLANS.
5. FORMS SHOULD BE CONSTRUCTED FOR THE HEADER CURBING. THE UNDERDRAIN (IF APPLICABLE) WILL PASS BELOW THE HEADER CURB, AND THUS MUST BE CONSTRUCTED FIRST.
6. THE BASE SHALL BE ASTM NO.57 STONE. THE BEDDING LAYER BENEATH THE PAVERS SHALL BE ASTM NO. 78 STONE, AND SHALL FOLLOW THE GRADATIONS LISTED IN THE ASTM SPECIFICATIONS
7. ALL AGGREGATE USED IN THE PICP SYSTEMS MUST BE DOUBLE-WASHED BEFORE IT WILL BE DEEMED ACCEPTABLE.
8. ALL AGGREGATE SHALL BE COMPACTED WITH THREE (3) PASSES OF A VIBRATORY PLATE COMPACTOR FOR EVERY 6-INCH LIFT OF STONE
9. PAVERS SHALL BE COMPACTED ONLY ONCE THE JOINT MATERIAL HAS BEEN SWEPT INTO PLACE (WITHIN THE PAVER GAPS).
10. TO ENSURE LONG-TERM FUNCTIONALITY OF PERMEABLE PAVEMENT, A MAINTENANCE AGREEMENT SHOULD BE ARRANGED. STREET SWEEPING SHOULD BE PERFORMED A MINIMUM OF TWO TIMES PER YEAR OVER THE PICP SYSTEMS WITH A REGENERATIVE AIR STREET SWEEPER

BIORETENTION (BRC)

1. CONTRACTOR SHALL SCARIFY THE BOTTOM OF THE BRC CUT BY RAKING THE IN-SITU SOIL WITH THE EXCAVATOR TEETH BEFORE THE ADDITION OF THE MEDIA, AGGREGATE, AND UNDERDRAINS.
2. ANY COMPACTED SOIL CAN BE ALLEVIATED AT THE BASE OF THE PRACTICE BY USING A PRIMARY TILLING OPERATION SUCH AS A CHISEL PLOW, RIPPER OR SUB-SOILER TO A MINIMUM 12 INCH DEPTH.
3. BRC MEDIA SHALL BE INSTALLED IN 1-FOOT LIFTS FOR EACH SYSTEM. RAKE MEDIA AS NEEDED TO LEVEL OUT. OVERFILL UP TO 10% ABOVE PROPOSED MEDIA SURFACE INVERT TO ACCOUNT FOR NATURAL SETTLING TO PROPER GRADE.
4. BRC MEDIA SHALL FOLLOW STATE OF NORTH CAROLINA BIORETENTION MEDIA SPECIFICATIONS, CONSISTING OF:

   4.1. 85-88% SAND
   4.2. 8-12% "FINES" (CLAY AND SILT)
   4.3. 3-6% STABILIZED PINE BARK-BASED ORGANIC MATTER
   4.4. A PHOSPHORUS INDEX (P-INDEX) RANGING FROM 10-30 (EQUIVALENT TO TOTAL PHOSPHORUS CONTENT OF 10-36 PARTS PER MILLION)

5. ALL AGGREGATE (ASTM NO. 57 STONE) SHALL BE DOUBLE-WASHED BEFORE BEING INSTALLED. ANY AGGREGATE THAT IS NOT DOUBLE-WASHED SHALL BE REJECTED BY THE ENGINEER ON SITE DURING INSTALLATION.
6. BRC MEDIA MUST BE PROTECTED FROM FINE SEDIMENTS ONCE IT HAS BEEN PLACED. ANY IN-SITU SOIL MUST IMMEDIATELY BE STAGED WITH PROPER EROSION AND SEDIMENT CONTROL TO PREVENT SEDIMENT CONTAMINATION OF THE CELL AS MEDIA IS ADDED.
7. MULCH TYPE SHALL BE TRIPLE-SHREDDED HARDWOOD.
8. ALL SPECIFIED BIBO UNDERDRAIN PIPES SHALL BE SCHEDULE 40 PVC. INCLUDE A UTILITY TRACE WIRE FOR ALL BURIED PIPING. PERFORATIONS SHOULD BE ⅜ -INCHES IN SIZE. USE SOLID SECTIONS OF SCH. 40 NON-PERFORATED PVC PIPING AND WATERTIGHT JOINTS WHEREVER THE UNDERDRAIN SYSTEM PASSES BELOW CONCRETE, ROADWAY, OR GRASS, DOWN STEEP SLOPES, MAKES A CONNECTION TO A DRAINAGE STRUCTURE, OR DAYLIGHTS ON GRADE.

DREAMS PARKING AREA
STORMWATER IMPROVEMENTS
CITY OF WILMINGTON
PLANNING REVIEW

SHEET NUMBER
11 OF 11

PLAN TYPE:
NOTES

NCSU BAE
WEAVER ADMIN. BLD.
3100 FAUCETTE DRIVE
RALEIGH, NC 27695
919-515-6803

NC STATE UNIVERSITY
Bio&Ag ENGINEERING

NORTH CAROLINA PROFESSIONAL SEAL 042555 ENGINEER ANDREW R. PAGE

PROJECT PARTNERS:
WRRI
NCDENR
CITY OF WILMINGTON NORTH CAROLINA

DRAWN :	J.L. PAGE
DESIGN :	J.L. PAGE
CHECK :	W.F. HUNT
APPROVED :	
PROJECT NAME :	DREAMS SW IMPRV.
SCALE :	NA
DATE :	AUG 27, 2015

PROJECT # 557683
PHASE # 02249