CURVE	RADIUS	ARC L.	CHORD L.	CHORD BEARING	TANGENT
C1	370.00'	130.45'	129.77'	N 12°39'35" W	65.91'

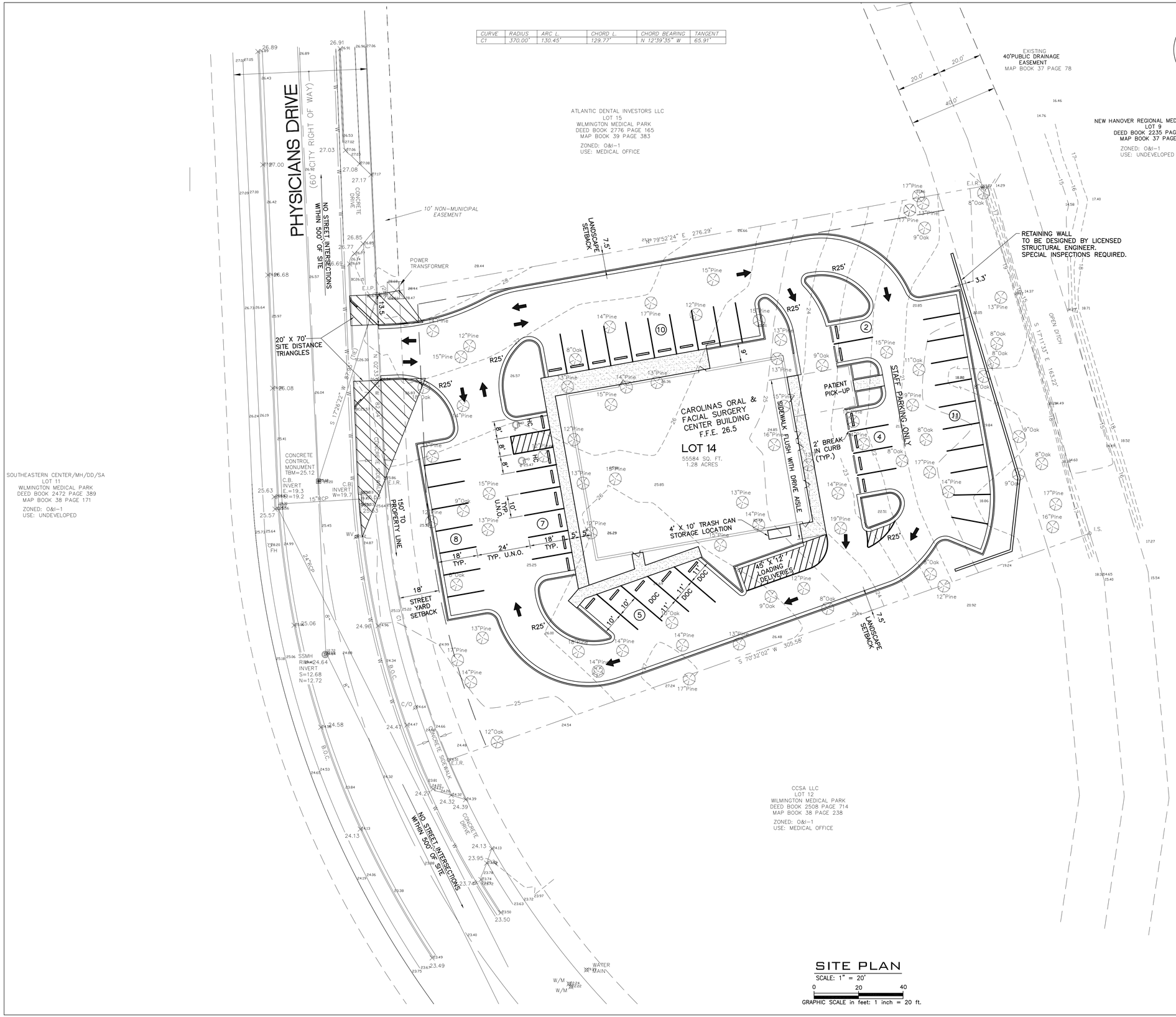

SITE PLAN

SCALE: 1" = 20'

0 20 40

GRAPHIC SCALE in feet: 1 inch = 20 ft.

LOCATION MAP

(NOT TO SCALE)

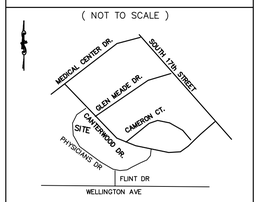

SITE DATA TABLE

PID:	R06015-001-007-000
ZONING:	O&I-1
BUILDING SETBACKS:	
FRONT:	20 FEET
SIDE:	20 FEET
REAR:	10 FEET
PROPERTY SIZE:	1.28 ACRES (55,584 SF)
BUILDING SIZE:	9,092 SF
BUILDING LOT COVERAGE:	9,092/55,584 = 16.4%
NUMBER OF UNITS:	N/A
NUMBER OF BUILDINGS:	1
BUILDING HEIGHT:	28 FEET
STORIES:	
FIRST:	7,524 SF
SECOND:	1,568 SF
IMPERVIOUS:	
EXISTING:	0 SF
PROPOSED:	36,870 SF
TOTAL WHEN COMPLETE	36,870 SF
PARKING:	
REQUIRED 9,092 SF @ 1/250:	37
MAX. ALLOWED 9,092 SF @ 1/170:	54
PROVIDED:	
STANDARD:	45
HANDICAP:	2
TOTAL WHEN COMPLETE	47
CAMA LAND USE CLASSIFICATION:	URBAN
FLOOD PLAIN DESIGNATION	ZONE X (NOT IN FLOOD ZONE)
CONSERVATION AREAS	NONE
WETLANDS	NONE
RECEIVING WATER BODY	GREENFIELD LAKE
WATER BODY CLASSIFICATION:	C; SW

LEGEND

CONCRETE

SURVEYOR'S LEGEND

E.I.P. = EXISTING IRON PIPE
E.I.R. = EXISTING IRON REBAR
E.C.M. = EXISTING CONCRETE MONUMENT
C.P. = COMPUTED POINT
W.V. = WATER VALVE
S.S.M.H. = SANITARY SEWER MAN HOLE
F.H. = FIRE HYDRANT
C/O = CLEAN OUT
T.B.M. = TEMPORARY BENCH MARK
W/M = WATER METER
× = SPOT ELEVATION

NOTE:
1. HVAC EQUIPMENT WILL BE ON ROOF TOP.

SURVEY BY:
HANOVER DESIGN SERVICES, P.A.
DATE: October 24, 2007
UPDATED: July 23, 2015

REVISIONS

DATE	No.	COMMENT

CRISER TROUTMAN TANNER
CONSULTING ENGINEERS
3809 Peachtree Ave., Suite 102
Wilmington, NC 28403
910.397.2929 Ph.
910.397.2971 Fax
www.ctdcteng neering.com
Firm License Number: F-0213

CRISER TROUTMAN TANNER

OWNER / DEVELOPER / APPLICANT
CAROLINAS ORAL & FACIAL SURGERY CENTER, INC.
ADDRESS:
1122 MEDICAL CENTER DRIVE
WILMINGTON, NORTH CAROLINA 28403
PH: 910-762-2618
FX: 910-763-5173

PROJECT:
CAROLINAS ORAL & FACIAL SURGERY CENTER
ADDRESS:
1305 PHYSICIANS DRIVE
WILMINGTON, NORTH CAROLINA 28403

SEAL

NOT FOR CONSTRUCTION

DESIGNED BY:	MARK T. ARCURI
DRAWN BY:	HWL
QUALITY CONTROL:	MTA
SCALE:	NOTED
FILE NUMBER:	7517.00
DATE:	03-16-16

SITE PLAN

SHEET NUMBER:
C2

CURVE	RADIUS	ARC L.	CHORD L.	CHORD BEARING	TANGENT
C1	370.00'	130.45'	129.77'	N 12°39'35" W	65.91'

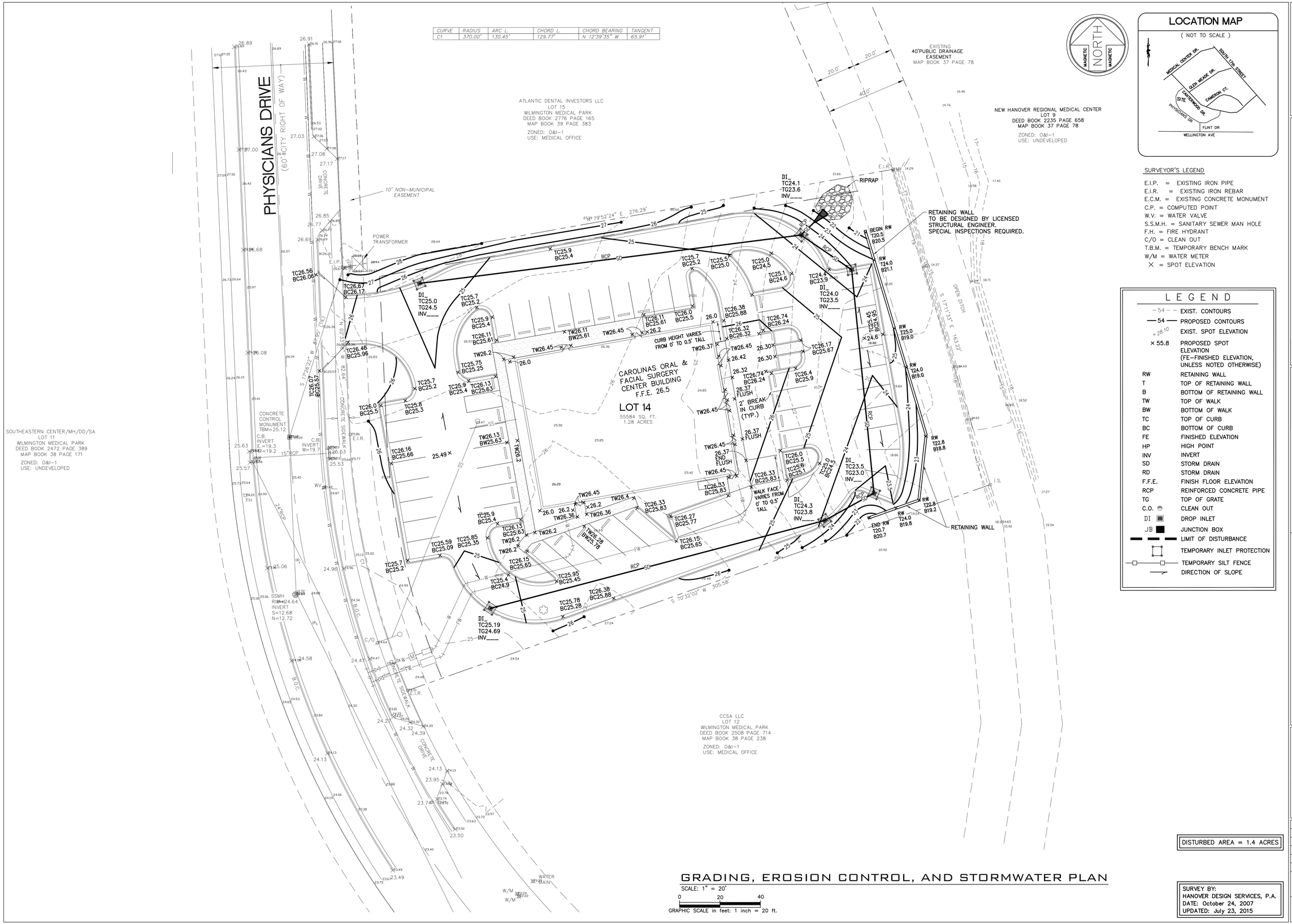

LOCATION MAP

(NOT TO SCALE)

SURVEYOR'S LEGEND

E.I.P. = EXISTING IRON PIPE
E.I.R. = EXISTING IRON REBAR
E.C.M. = EXISTING CONCRETE MONUMENT
C.P. = COMPUTED POINT
W.V. = WATER VALVE
S.S.M.H. = SANITARY SEWER MAN HOLE
F.H. = FIRE HYDRANT
C/O = CLEAN OUT
T.B.M. = TEMPORARY BENCH MARK
W/M = WATER METER
× = SPOT ELEVATION

LEGEND

–54– –	EXIST. CONTOURS
—54—	PROPOSED CONTOURS
× 28.10	EXIST. SPOT ELEVATION
× 55.8	PROPOSED SPOT ELEVATION (FE–FINISHED ELEVATION, UNLESS NOTED OTHERWISE)
RW	RETAINING WALL
T	TOP OF RETAINING WALL
B	BOTTOM OF RETAINING WALL
TW	TOP OF WALK
BW	BOTTOM OF WALK
TC	TOP OF CURB
BC	BOTTOM OF CURB
FE	FINISHED ELEVATION
HP	HIGH POINT
INV	INVERT
SD	STORM DRAIN
RD	STORM DRAIN
F.F.E.	FINISH FLOOR ELEVATION
RCP	REINFORCED CONCRETE PIPE
TG	TOP OF GRATE
C.O.	CLEAN OUT
DI	DROP INLET
JB	JUNCTION BOX
	LIMIT OF DISTURBANCE
	TEMPORARY INLET PROTECTION
	TEMPORARY SILT FENCE
	DIRECTION OF SLOPE

DISTURBED AREA = 1.4 ACRES

GRADING, EROSION CONTROL, AND STORMWATER PLAN

SCALE: 1" = 20'

0 20 40

GRAPHIC SCALE in feet: 1 inch = 20 ft.

SURVEY BY:
HANOVER DESIGN SERVICES, P.A.
DATE: October 24, 2007
UPDATED: July 23, 2015

REVISIONS

DATE	No.	COMMENT

CRISER TROUTMAN TANNER
CONSULTING ENGINEERS
3809 Peachtree Ave., Suite 102
Wilmington, NC 28403
910.397.2929 Ph.
910.397.2971 Fax
www.ctdcteengineering.com
Firm License Number: F-0113

CRISER TROUTMAN TANNER

OWNER / DEVELOPER / APPLICANT
CAROLINAS ORAL & FACIAL SURGERY CENTER, INC.
ADDRESS:
1122 MEDICAL CENTER DRIVE
WILMINGTON, NORTH CAROLINA 28403
PH: 910-762-2618
FX: 910-763-5173

PROJECT:
CAROLINAS ORAL & FACIAL SURGERY CENTER
ADDRESS:
1305 PHYSICIANS DRIVE
WILMINGTON, NORTH CAROLINA 28403

SEAL

NOT FOR CONSTRUCTION

DESIGNED BY:	MARK T. ARCURI
DRAWN BY:	HWL
QUALITY CONTROL:	MTA
SCALE:	NOTED
FILE NUMBER:	7517.00
DATE:	03–16–16

GRADING, EROSION CONTROL, AND STORMWATER PLAN

SHEET NUMBER:
C3

CURVE	RADIUS	ARC L.	CHORD L.	CHORD BEARING	TANGENT
C1	370.00'	130.45'	129.77'	N 12°39'35" W	65.91'

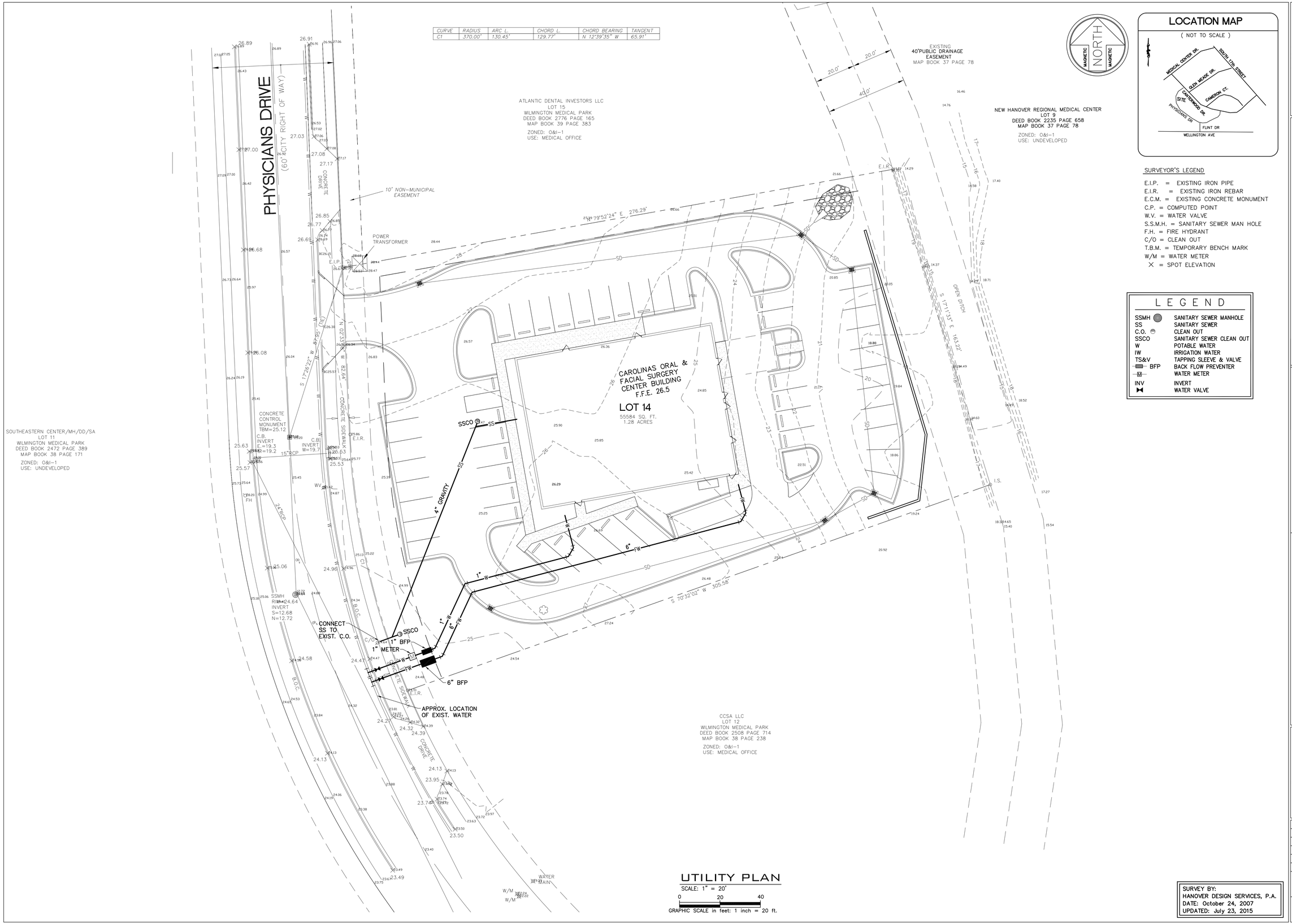

UTILITY PLAN

SCALE: 1" = 20'

0 20 40

GRAPHIC SCALE in feet: 1 inch = 20 ft.

LOCATION MAP

(NOT TO SCALE)

SURVEYOR'S LEGEND

E.I.P. = EXISTING IRON PIPE
E.I.R. = EXISTING IRON REBAR
E.C.M. = EXISTING CONCRETE MONUMENT
C.P. = COMPUTED POINT
W.V. = WATER VALVE
S.S.M.H. = SANITARY SEWER MAN HOLE
F.H. = FIRE HYDRANT
C/O = CLEAN OUT
T.B.M. = TEMPORARY BENCH MARK
W/M = WATER METER
X = SPOT ELEVATION

LEGEND

SSMH	SANITARY SEWER MANHOLE
SS	SANITARY SEWER
C.O.	CLEAN OUT
SSCO	SANITARY SEWER CLEAN OUT
W	POTABLE WATER
IW	IRRIGATION WATER
TS&V	TAPPING SLEEVE & VALVE
BFP	BACK FLOW PREVENTER
M	WATER METER
INV	INVERT
	WATER VALVE

SURVEY BY:
HANOVER DESIGN SERVICES, P.A.
DATE: October 24, 2007
UPDATED: July 23, 2015

REVISIONS

DATE	NO	COMMENT

CRISER TROUTMAN TANNER
CONSULTING ENGINEERS
3809 Peachtree Ave., Suite 102
Wilmington, NC 28403
910.397.2929 Ph.
910.397.2971 Fax
www.ctt@cttengineering.com
Firm License Number: F-0113

CRISER TROUTMAN TANNER

OWNER / DEVELOPER / APPLICANT
CAROLINAS ORAL & FACIAL SURGERY CENTER, INC.
ADDRESS:
1122 MEDICAL CENTER DRIVE
WILMINGTON, NORTH CAROLINA 28403
PH: 910-762-2618
FX: 910-763-5173

PROJECT:
CAROLINAS ORAL & FACIAL SURGERY CENTER
ADDRESS:
1305 PHYSICIANS DRIVE
WILMINGTON, NORTH CAROLINA 28403

SEAL

NOT FOR CONSTRUCTION

DESIGNED BY:	MARK T. ARCURI
DRAWN BY:	HWL
QUALITY CONTROL:	MTA
SCALE:	NOTED
FILE NUMBER:	7517.00
DATE:	03-16-16

UTILITY PLAN

SHEET NUMBER:
C4

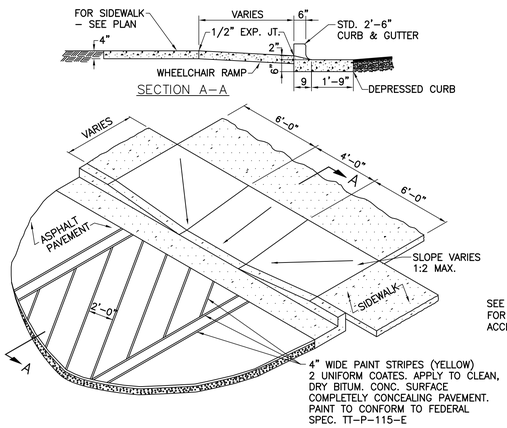

WHEELCHAIR RAMP DETAILS

SCALE: N.T.S.

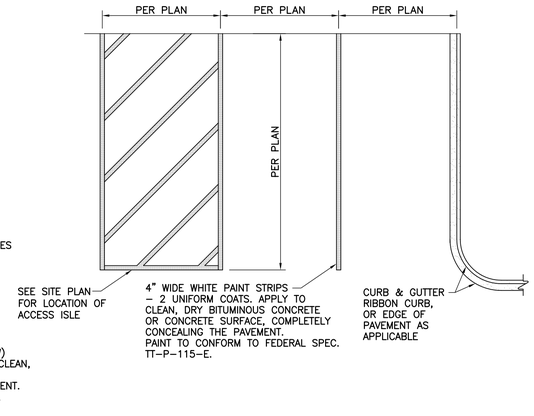

PAINT STRIPE DETAIL

SCALE: N.T.S.

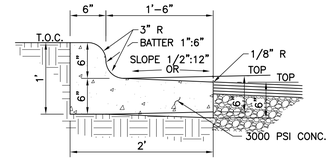

2'-0" CURB AND GUTTER DETAIL

SCALE: N.T.S.

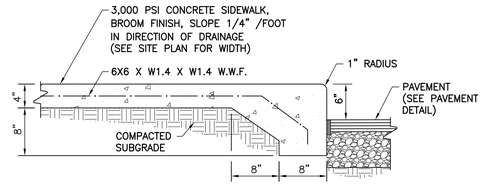

TURNED DOWN SIDEWALK CROSS SECTION

SCALE: N.T.S.

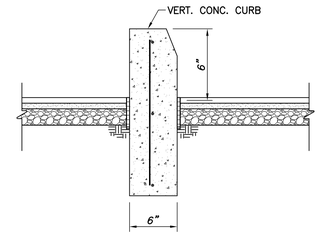

VERTICAL CONCRETE CURB

SCALE: N.T.S.

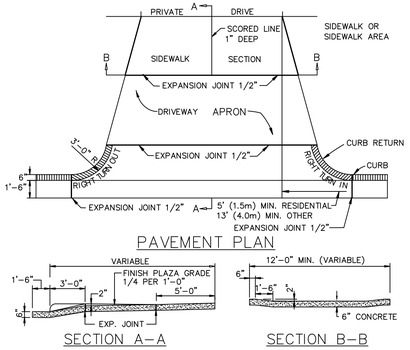

ENTRANCE DETAIL

SCALE: N.T.S.

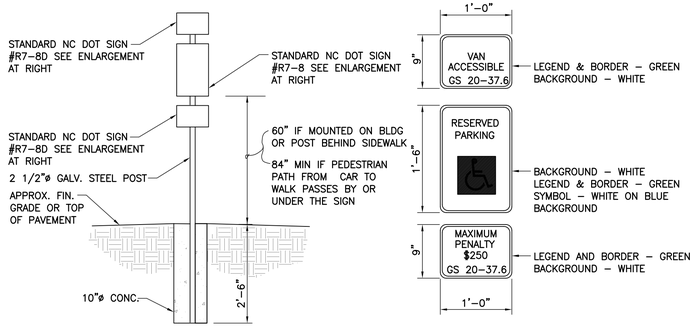

HANDICAPPED SIGN

SCALE: N.T.S.

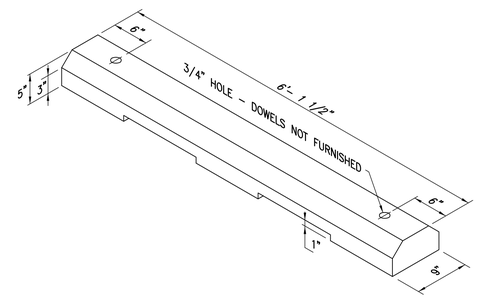

CONCRETE PARKING BUMPER

SCALE: N.T.S.

DATE	No	COMMENT

REVISIONS

CRISER TROUTMAN TANNER
CONSULTING ENGINEERS
3809 Peachtree Ave., Suite 102
Wilmington, NC 28403
910.397.2929 Ph.
910.397.2971 Fax
www.ctcriserengineering.com
Firm License Number: F-0213

CRISER TROUTMAN TANNER

OWNER / DEVELOPER / APPLICANT
CAROLINAS ORAL & FACIAL SURGERY CENTER, INC.
ADDRESS:
1122 MEDICAL CENTER DRIVE
WILMINGTON, NORTH CAROLINA 28403
PH: 910–762–2618
FX: 910–763–5173

PROJECT:
CAROLINAS ORAL & FACIAL SURGERY CENTER
ADDRESS:
1305 PHYSICIANS DRIVE
WILMINGTON, NORTH CAROLINA 28403

SEAL

NOT FOR CONSTRUCTION

DESIGNED BY:	MARK T. ARCURI
DRAWN BY:	HWL
QUALITY CONTROL:	MTA
SCALE:	NOTED
FILE NUMBER:	7517.00
DATE:	03–16–16

CIVIL DETAILS

SHEET NUMBER:
C5

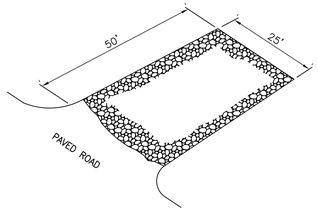

STONE PAD AT SITE EXITS TO REMOVE MUD FROM TIRES

NOTES:

1.) STONE SHALL BE 2–3 INCH WASHED STONE (6" THICK).

2.) THE ENTRANCE SHALL BE MAINTAINED TO PREVENT TRACKING OR FLOWING OF SEDIMENT ONTO PUBLIC RIGHTS–OF–WAY. THIS MAY REQUIRE PERIODIC TOP DRESSING WITH ADDITIONAL STONE AND REPAIR AND/OR CLEANOUT OF ANY MEASURES USED TO TRAP SEDIMENT.

3.) WHEN NECESSARY WHEELS SHALL BE CLEANED TO REMOVE SEDIMENT PRIOR TO ENTRANCE ONTO PUBLIC RIGHT–OF–WAY. WASHING SHALL BE DONE ON AN AREA STABILIZED WITH CRUSHED STONE WHICH DRAINS INTO AN APPROVED SEDIMENT CONTROLLING STRUCTURE. USE SAND BAGS, GRAVEL, BOARDS OR OTHER APPROVED METHODS TO PREVENT SEDIMENT FROM ENTERING ANY STORM DRAIN, DITCH, OR WATER–COURSE.

4.) ALL SEDIMENT SPILLED, DROPPED, WASHED OR TRACKED ONTO PUBLIC RIGHTS–OF–WAY MUST BE REMOVED IMMEDIATELY.

TEMPORARY CONSTRUCTION ENTRANCE

SCALE: N.T.S.

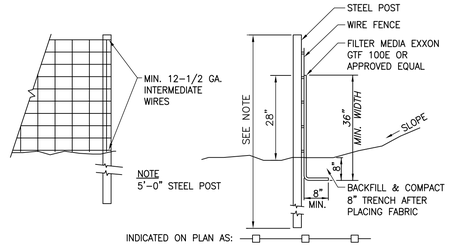

NOTES:

1.) WIRE FENCE SHALL BE A MIN. OF 32" IN WIDTH AND SHALL HAVE A MIN. OF SIX LINE WIRES WITH 12" STAY SPACING. BOTTOM PORTION OF WIRE FENCE SHALL BE BURIED 6".

2.) FILTER FABRIC SHALL MEET OR EXCEED 150 LBS. GRAB TENSILE (ASTM–D–1682), 180 PSI. BURST (ASTM–D–2263) AND 70 ON COE E.O.S. TEST.

3.) STEEL POST SHALL BE 5'–0' IN HEIGHT AND BE OF THE SELF–FASTENER TYPE.

4.) STEEL POSTS FOR SILT FENCE SHALL BE NO WIDER THAN 8' APART O.C. WITH WIRE BACKING.

5.) CONTRACTOR TO FIELD LOCATE AS NECESSARY TO CONTROL SURFACE EROSION.

TEMPORARY SILT FENCE

SCALE: N.T.S.

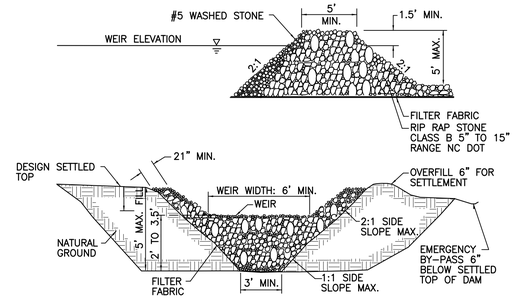

SEDIMANT TRAP SECTIONS

SCALE: N.T.S.

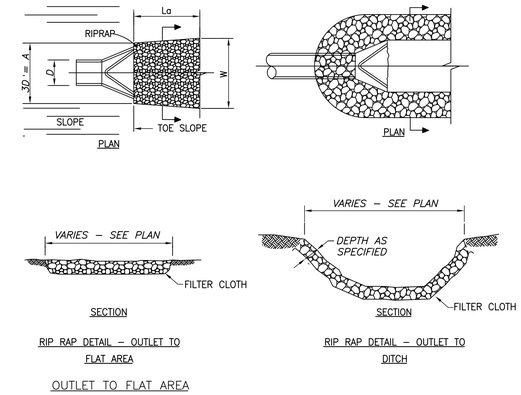

RIP RAP DETAIL – OUTLET TO FLAT AREA

RIP RAP DETAIL – OUTLET TO DITCH

OUTLET TO FLAT AREA

RIP RAP DETAILS

SCALE: N.T.S.

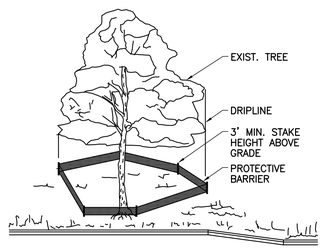

NOTES:

1. TREES TO BE SAVED WILL BE CLEARLY MARKED PRIOR TO CONSTRUCTION AND A PROTECTIVE BARRIER IS TO BE INSTALLED AT THE DRIPLINE. DRIP LINE – THE AREA OF SOIL DIRECTLY BENEATH THE TREE EXTENDING OUT TO THE TIPS OF THE OUTERMOST BRANCHES.
2. NO CONSTRUCTION EQUIPMENT SHALL BE ALLOWED ON SITE UNTIL ALL TREE PROTECTION FENCING AND SILT FENCING HAS BEEN INSTALLED AND APPROVED
3. TREE PROTECTIVE FENCING TO BE MAINTAINED THROUGHOUT THE DURATION OF THE PROJECT.
4. LAND CLEARING AND CONSTRUCTION CONTRACTORS SHALL RECEIVE ADEQUATE INSTRUCTION ON TREE PROTECTION REQUIREMENTS AND METHODS.

METHOD OF TREE PROTECTION DURING CONSTRUCTION

SCALE: N.T.S.

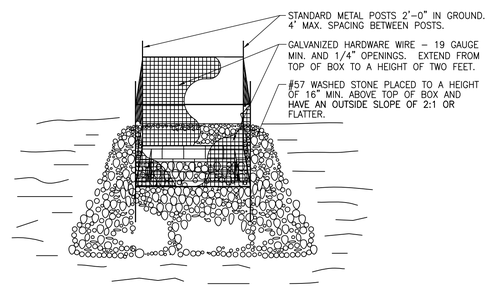

INLET SEDIMENT CONTROL

SCALE: N.T.S.

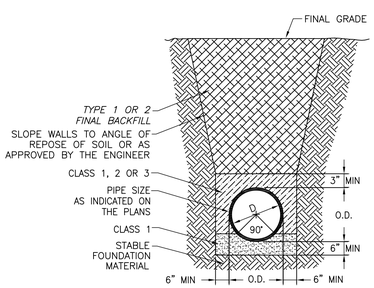

PIPE TRENCH DETAIL

SCALE: N.T.S.

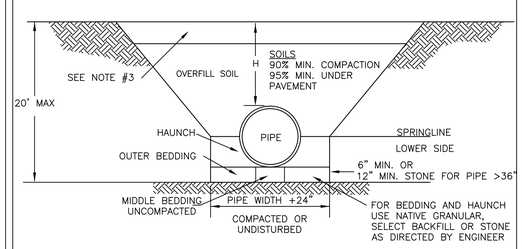

NOTES:

1. CONTRACTOR SHALL ENSURE BOTTOM OF TRENCH IS SUITABLE FOR PIPE INSTALLATION AND DOES NOT REQUIRE FOUNDATION CONDITIONING STONE.

2. CONTRACTOR TO INSTALL BEDDING AND PIPE BEFORE INSTALLING HAUNCH AND THEN OVERFILL. SOILS SHALL BE INSTALLED IN 6"–8" LIFTS AND COMPACTED TO MIN. % DENSITY AS DETERMINED BY THE STANDARD PROCTOR ASTM D–698–A METHOD.

3. WHERE IN PAVEMENT, CONTRACTOR SHALL ADHERE TO CITY STREET CUT POLICY AND SD 1–04 OR SD 1–05 FOR ROAD AND PAVEMENT REBUILD.

4. SOIL SHALL BE COMPACTED BY A MECHANIZED TAMP (I.E. JUMPING JACK). HOWEVER, VIBRATORY ROLLERS > 18" WIDTH MAY BE USED FOR LARGER EXCAVATIONS. THE PLATE TAMP METHOD SHALL NOT BE USED.

5. THIS DETAIL IS REPRESENTATIVE AND PIPE TRENCH DESIGN IS SUBJECT TO SPECIFIC SOIL CATEGORY (I, II, III), AND INSTALLATION TYPE (1, 2, 3, 4), AS DIRECTED BY THE ENGINEER AND SITE CONDITIONS.

	STANDARD DETAIL	CITY OF WILMINGTON NORTH CAROLINA
DATE: MAY, 2013	PIPE TRENCH TYPICAL	CITY OF WILMINGTON ENGINEERING OFFICE 212 OPERATIONS CENTER DRIVE WILMINGTON N.C. 28412 (910) 341–7807
DRAWN: JSR		
CHECKED: BDR, P.E.		
SCALE: NOT TO SCALE		SD 1-07

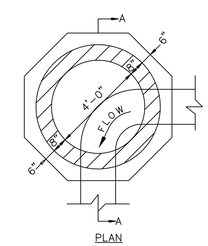

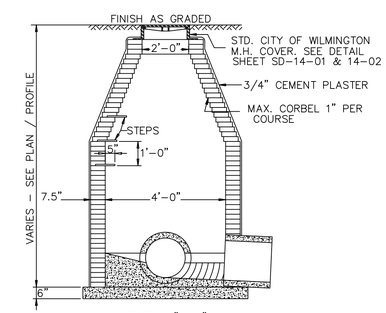

SECTION "A–A"

	STANDARD DETAIL	CITY OF WILMINGTON NORTH CAROLINA
DATE: 2001	GUIDELINES FOR STORM DRAIN MANHOLE	CITY OF WILMINGTON ENGINEERING PO BOX 1810 WILMINGTON, NC 28402 (910) 341–7807
DRAWN BY JSR/CMR		
CHECKED BY B.P., P.E.		
SCALE NOT TO SCALE		SD 2-03

DATE	No	COMMENT

REVISIONS

CRISER TROUTMAN TANNER
CONSULTING ENGINEERS
3809 Peachtree Ave., Suite 102
Wilmington, NC 28403
910.397.2929 Ph.
910.397.2971 Fax
www.ctcengineering.com
Firm License Number: F-0113

CRISER TROUTMAN TANNER

OWNER / DEVELOPER / APPLICANT
CAROLINAS ORAL & FACIAL SURGERY CENTER, INC.
ADDRESS: 1122 MEDICAL CENTER DRIVE WILMINGTON, NORTH CAROLINA 28403
PH: 910–762–2618
FX: 910–763–5173

PROJECT:
CAROLINAS ORAL & FACIAL SURGERY CENTER
ADDRESS: 1305 PHYSICIANS DRIVE WILMINGTON, NORTH CAROLINA 28403

SEAL

NOT FOR CONSTRUCTION

DESIGNED BY:	MARK T. ARCURI
DRAWN BY:	HWL
QUALITY CONTROL:	MTA
SCALE:	NOTED
FILE NUMBER:	7517.00
DATE:	03–16–16

CIVIL DETAILS

SHEET NUMBER:
C6

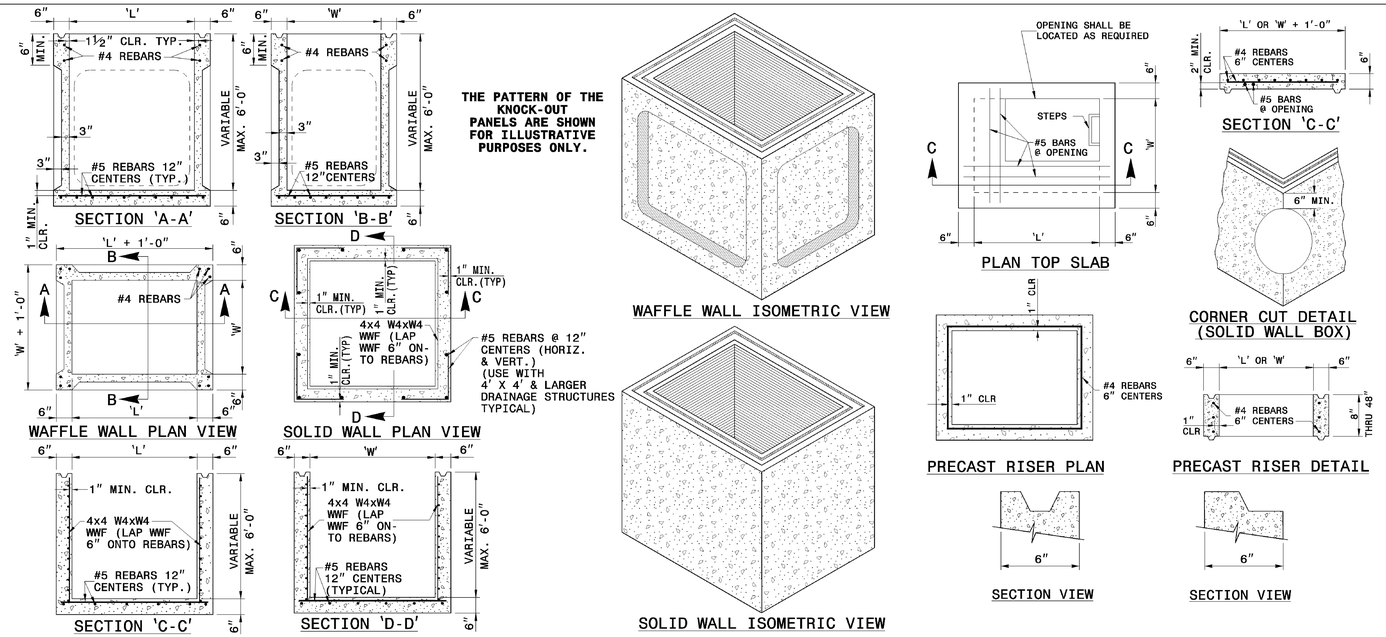

PRECAST DRAINAGE STRUCTURES (SOLID AND WAFFLE WALL)

SCALE: N.T.S. [NC DOT STANDARD DETAIL 840.45]

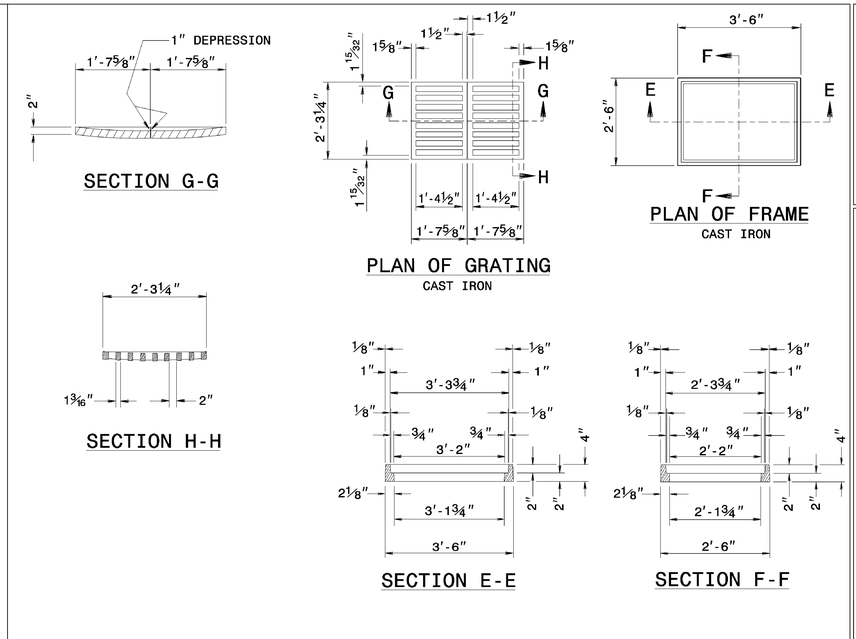

DROP INLET FRAME AND GRATES

SCALE: N.T.S. (12" THRU 30" PIPE) [NC DOT STANDARD DETAIL 840.16 – 1 OF 1]

GENERAL NOTES:

* THIS PRECAST BOX MAY BE USED FOR THE FOLLOWING STANDARDS: 840.01, 840.02, 840.04, 840.05, 840.11, 840.12, 840.14, 840.15, 840.17, 840.18, 840.19, 840.26, 840.27, 840.28, 840.31, 840.32 AND 840.41.
* USE 4000 PSI CONCRETE.
* PROVIDE ALL REINFORCING STEEL WHICH MEETS ASTM A615 FOR GRADE 60 AND WELDED WIRE FABRIC CONFORMING TO ASTM A185.
* LIMIT MAXIMUM DEPTH TO TOP OF BOTTOM SLAB FOR WAFFLE WALL STRUCTURE TO 10'-0"; LIMIT SOLID WALL STRUCTURE TO 15'-0".
* PLACE LIFT HOLES OR PINS IN ACCORDANCE WITH OSHA STANDARD 1926.704.
* CUT OR FORM OPENINGS FOR PIPE TO PROVIDE REQUIRED SIZE AND LOCATION. ORIENT WAFFLE WALL STRUCTURES SO THAT PIPES ENTER THROUGH THE KNOCKOUT/WAFFLE PANELS ONLY. PIPES MAY ENTER THROUGH THE CORNERS OF SOLID WALL BOXES IF A MINIMUM OF 6" OF WALL IS PROVIDED ABOVE THE HOLE.
* ALL ELEMENTS PRECAST TO MEET ASTM C913.
* FRAME AND GRATE HEIGHT MAY BE ADJUSTED WITH CONCRETE OR BRICK IN ACCORDANCE WITH STANDARD 840.25.
* PROVIDE PRECAST STRUCTURES OVER 4'-0" IN DEPTH WITH STEPS AS DIRECTED BY THE ENGINEER.
* WELDED WIRE FABRIC MAY BE SUBSTITUTED FOR REBAR AS LONG AS THE SAME AREA OF STEEL IS PROVIDED.
* SEAL JOINTS WITH A FLEXIBLE BUTYL RUBBER BASE CONFORMING TO FEDERAL SPECIFICATION SS-S-21A, AASHTO M-198, TYPE B - BUTYL RUBBER.
* LIMIT MAXIMUM STRUCTURE SIZE TO INSIDE CLEAR DIMENSIONS OF 5'-0" X 5'-0".
* THE OUTSIDE PIPE DIAMETER PLUS 2" OR THE OPENING REQUIRED FOR FRAME AND GRATE IS THE MINIMUM STRUCTURE SIZE WHICHEVER IS GREATER.
* USE FRAME AND COVER AS INDICATED ON THE PLANS. REINFORCE OPENING AS SHOWN ON THIS SHEET.

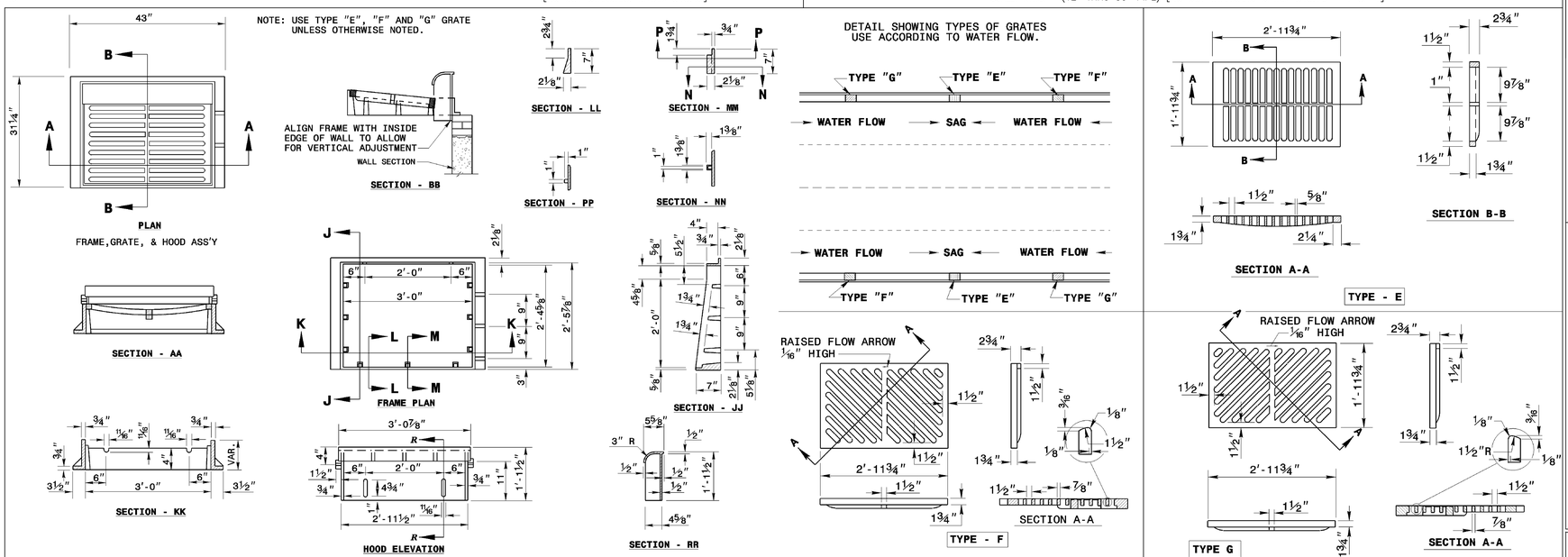

CATCH BASIN FRAME, GRATES, AND HOOD

SCALE: N.T.S. [NC DOT STANDARD DETAIL 840.03]

NOTES:

STRUCTURES:

1. PRECAST STRUCTURES SHALL MEET NCDOT 840.45 OR PRIOR APPROVED EQUIVALENT.
2. BRICK BUILT CATCH BASINS CAN ALTERNATIVELY BE USED, AND SHALL MEET NCDOT 840.01, OR PRIOR APPROVED EQUIVALENT.
3. CONCRETE CATCH BASINS CAN ALTERNATIVELY BE USED, AND SHALL MEET NCDOT 840.02, OR PRIOR APPROVED EQUIVALENT.
4. CONCRETE DROP INLETS CAN ALTERNATIVELY BE USED, AND SHALL MEET NCDOT 840.14, OR PRIOR APPROVED EQUIVALENT.
5. BRICK BUILT DROP INLETS CAN ALTERNATIVELY BE USED, AND SHALL MEET NCDOT 840.15, OR PRIOR APPROVED EQUIVALENT.

CASTINGS:

1. CATCH BASIN CASTINGS SHALL BE NCDOT 840.03, OR PRIOR APPROVED EQUIVALENT.
2. DROP INLET CASTINGS SHALL BE NCDOT 840.16, OR PRIOR APPROVED EQUIVALENT.
3. STORM DRAIN MANHOLE CASTINGS SHALL BE NCDOT 840.54, OR PRIOR APPROVED EQUIVALENT.

OTHER:

1. ORIENTATION OF STORM DRAIN INLETS ON PLAN ARE FOR THE GRATE AND/OR CASTINGS. MINIMUM STRUCTURE SIZE IS 2' X 2' PLAN DIMENSION. CONTRACTOR SHALL PROVIDE BOXES LARGER THAN MINIMUM SIZE, ORIENT THE BOX/STRUCTURE, AND/OR PROVIDE TRANSITION TOPS AS NECESSARY TO ACCEPT THE PIPE SIZES AND TO ACHIEVE THE PIPE ALIGNMENTS AS SHOWN ON THE PLAN. PIPES SHALL NOT CONNECT AT BOX CORNERS WITHOUT PRIOR APPROVAL FROM THE ENGINEER. SUMPS SHALL BE ZERO INCHES UNLESS OTHERWISE SHOWN. THERE SHALL BE NO MAN STEPS UNLESS OTHERWISE SHOWN.

DATE	No	COMMENT

REVISIONS

CRISER TROUTMAN TANNER
CONSULTING ENGINEERS
3809 Peachtree Ave., Suite 102
Wilmington, NC 28403
910.397.2929 Ph.
910.397.2971 Fax
www.criseretroutmanengineering.com
Firm License Number: F-0113

CRISER TROUTMAN TANNER

OWNER / DEVELOPER / APPLICANT
CAROLINAS ORAL & FACIAL SURGERY CENTER, INC.
ADDRESS: 1122 MEDICAL CENTER DRIVE
WILMINGTON, NORTH CAROLINA 28403
PH: 910-762-2618
FX: 910-763-5173

PROJECT:
CAROLINAS ORAL & FACIAL SURGERY CENTER
ADDRESS: 1305 PHYSICIANS DRIVE
WILMINGTON, NORTH CAROLINA 28403

SEAL

NOT FOR CONSTRUCTION

DESIGNED BY:	MARK T. ARCURI
DRAWN BY:	HWL
QUALITY CONTROL:	MTA
SCALE:	NOTED
FILE NUMBER:	7517.00
DATE:	03-16-16

CIVIL DETAILS

SHEET NUMBER:
C7

NOTES:
1. NO JOINT SHALL BE INSTALLED BETWEEN THE MAIN SERVICE TAP AND THE METER STOP. ALL SERVICES SHALL BE INSTALLED PERPENDICULAR TO MAIN.
2. SERVICE SADDLES ON PVC MAINS SHALL BE WIDE BAND BRASS BODY: SADDLE McDONALD 3801 OR EQUIVALENT.
3. METER BOXES SUSCEPTIBLE TO TRAFFIC SHALL CONFORM TO ASTM A48, CLASS 30B AND AASHTO H20 LOAD RATING STANDARDS (SIP MODEL 4240 OR APPROVED EQUIVALENT).

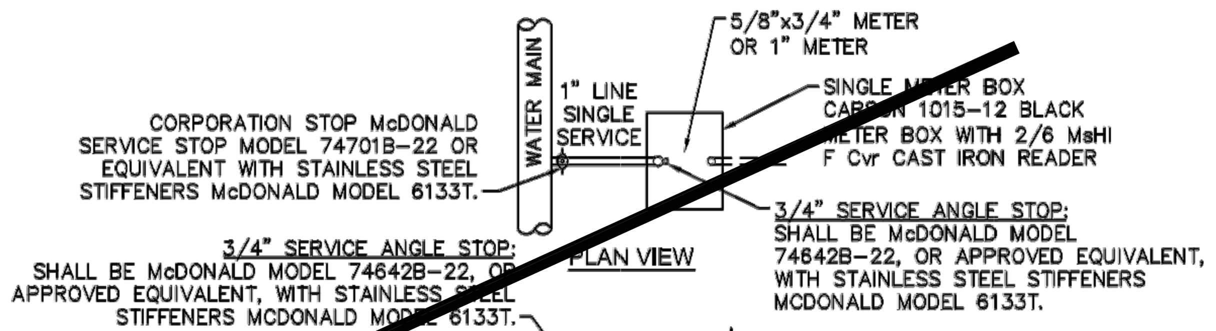

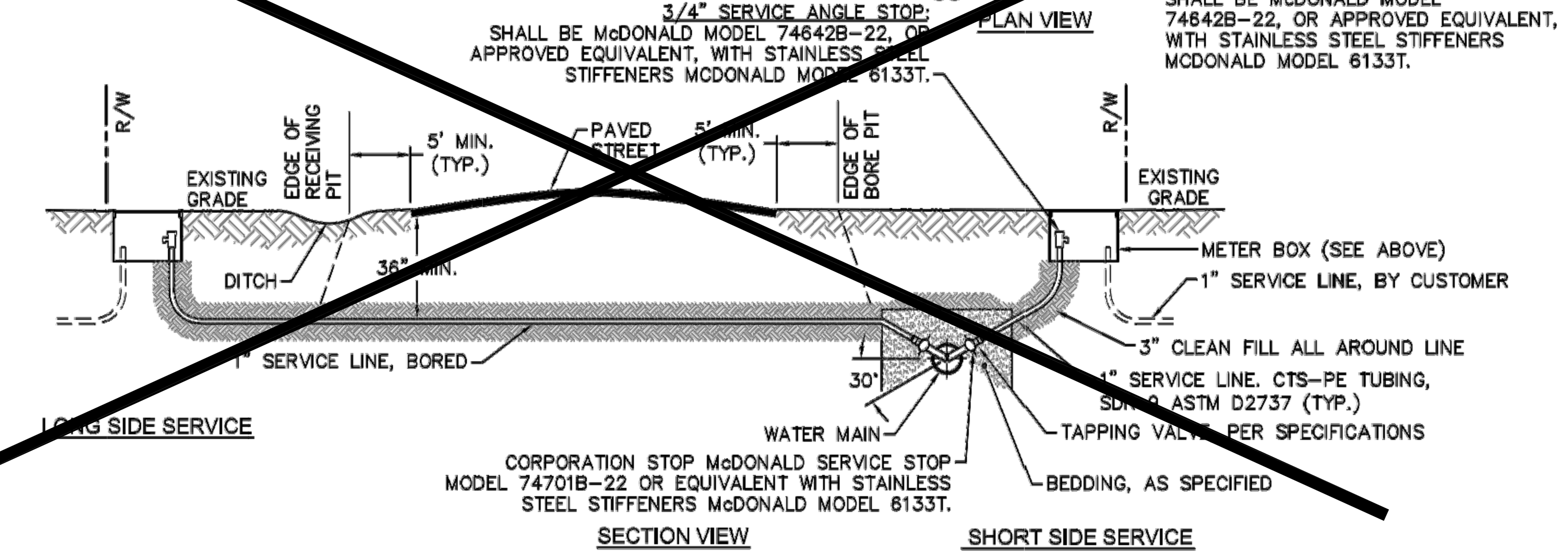

SINGLE SERVICE CONNECTION

TYPICAL WATER SERVICE CONNECTION FOR RESIDENTIAL SINGLE FAMILY HOME ON CFPUA WATER SYSTEM

NOT TO SCALE

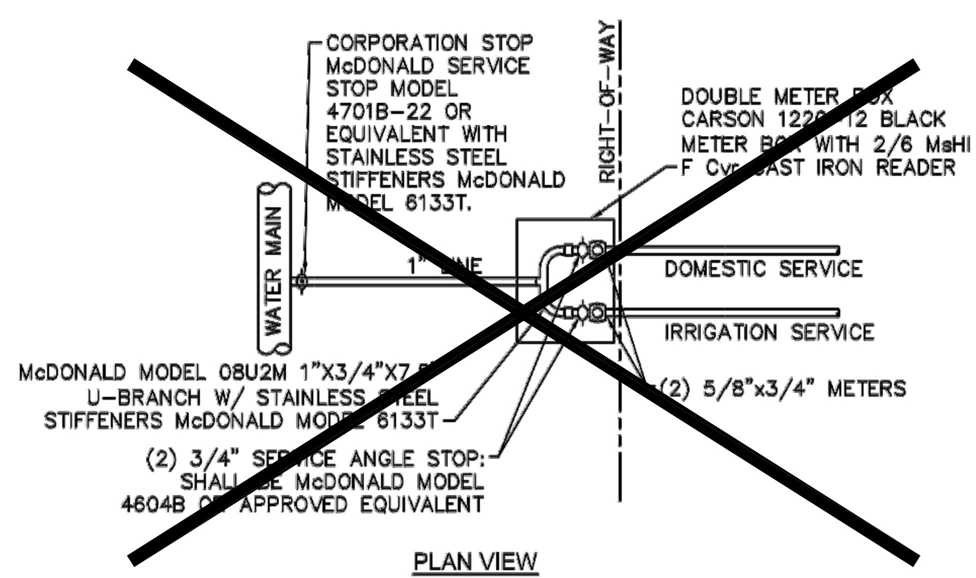

DOUBLE SERVICE CONNECTION

(ONE DOMESTIC SERVICE PER TAP)

NOT TO SCALE

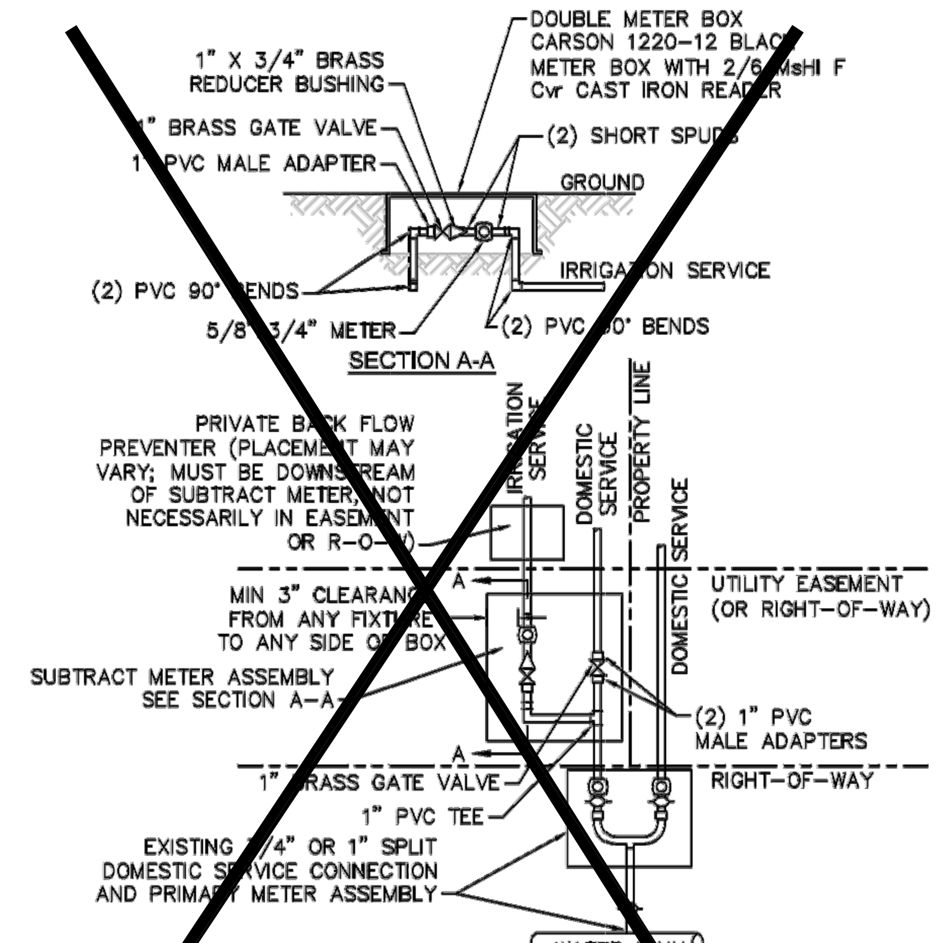

NOTES:
1. BEYOND THE PRIMARY DOMESTIC METER ASSEMBLY, CFPUA IS ONLY RESPONSIBLE FOR METER AND WASHERS OF SUBTRACT METER ASSEMBLY.
2. ALL PIPE AND FITTINGS UP TO FINAL SERVICE LINE TO BE 1" EXCLUDING METERS.

PLAN VIEW

DOUBLE SERVICE CONNECTION USING SUBTRACT METER

(MULTIPLE DOMESTIC SERVICES PER TAP)

NOT TO SCALE

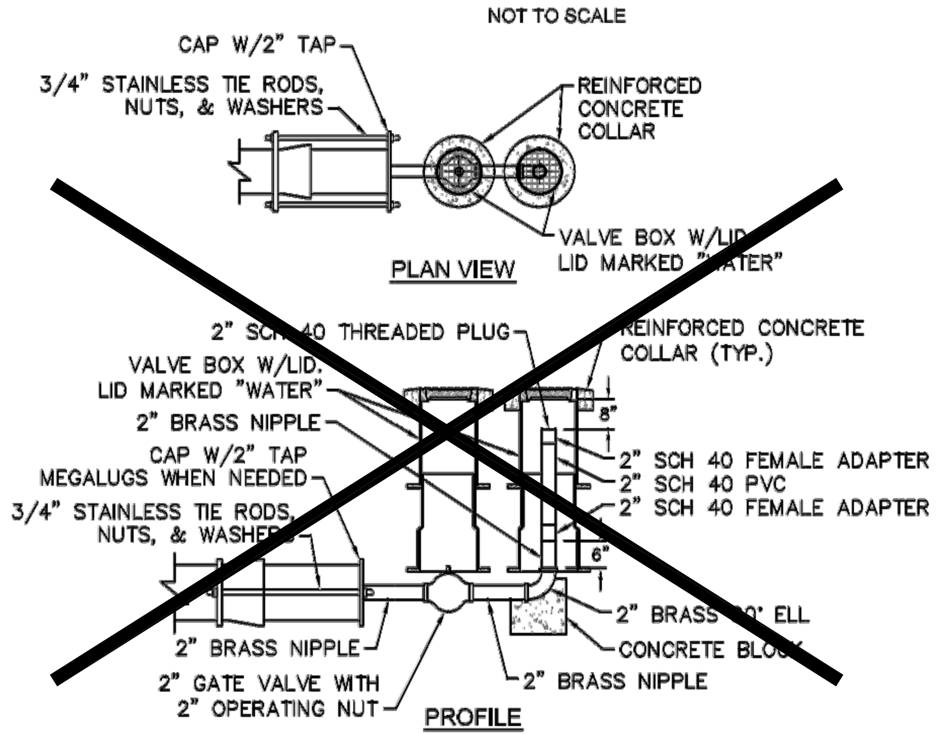

2" BLOW-OFF

NOT TO SCALE

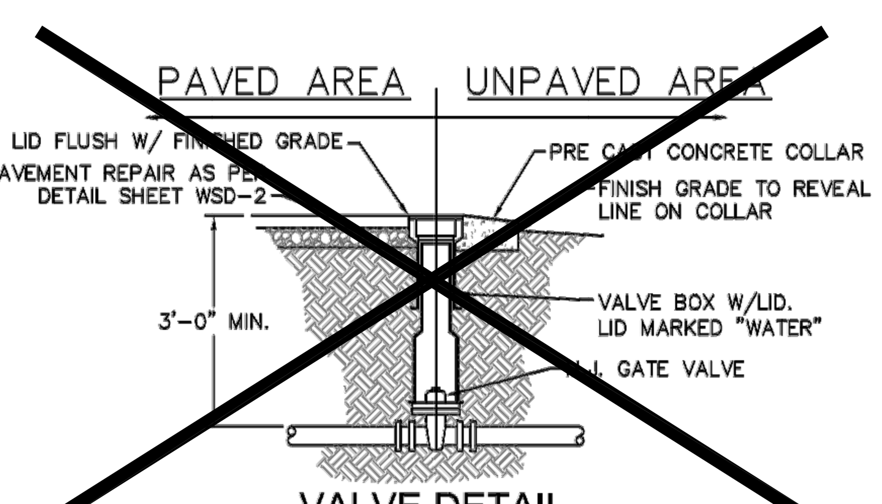

VALVE DETAIL

NOT TO SCALE

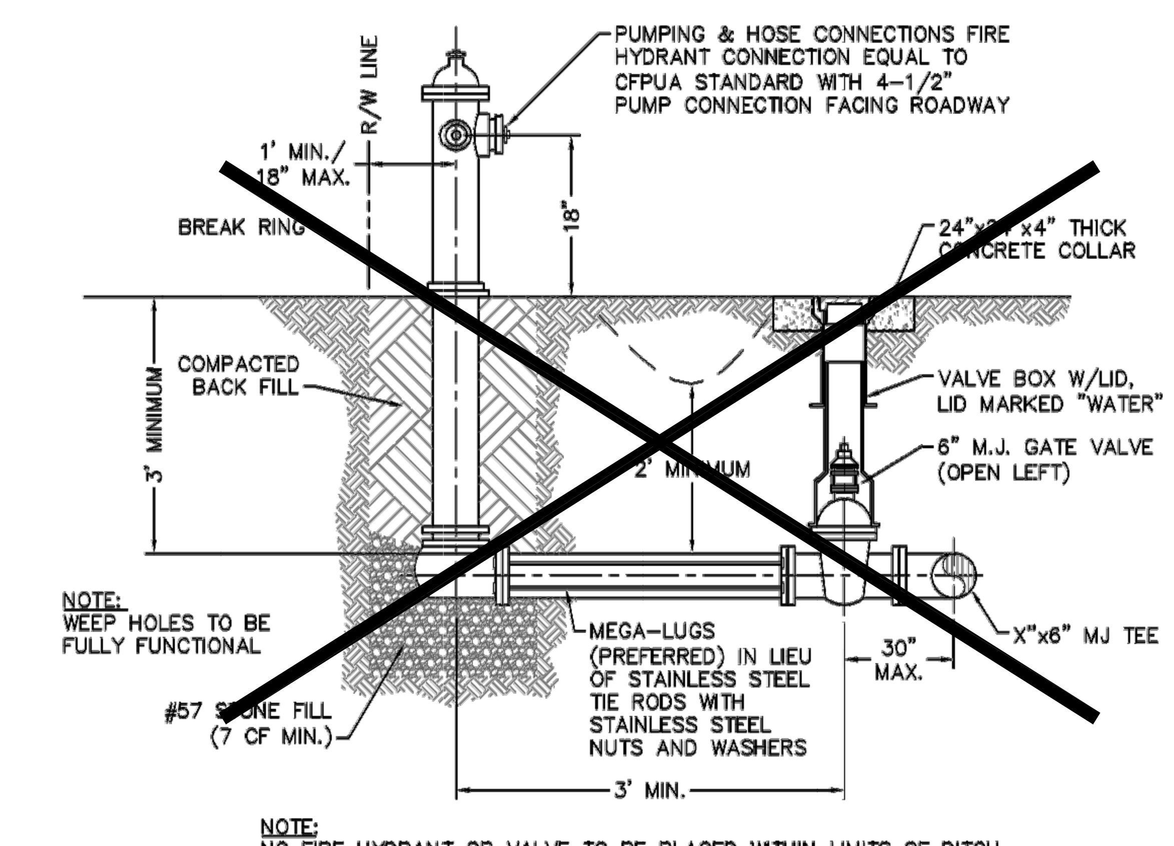

NOTE:
WEEP HOLES TO BE FULLY FUNCTIONAL

NOTE:
NO FIRE HYDRANT OR VALVE TO BE PLACED WITHIN LIMITS OF DITCH.

FIRE HYDRANT ASSEMBLY

NOT TO SCALE

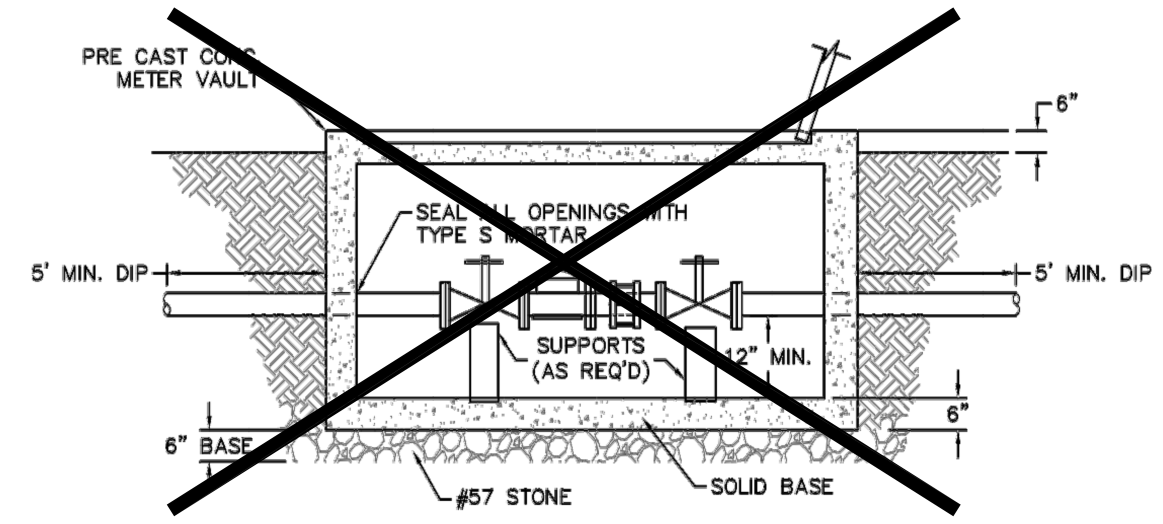

METER VAULT SECTION A-A

NOT TO SCALE

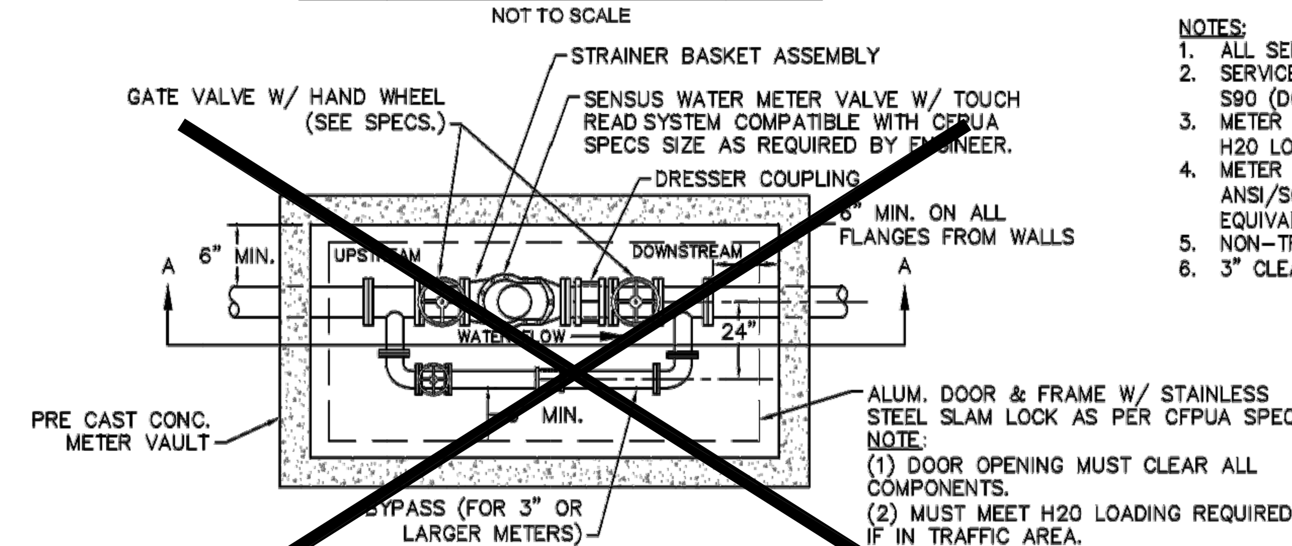

WATER METER VAULT

FOR WATER METERS LARGER THAN 2"

NOT TO SCALE

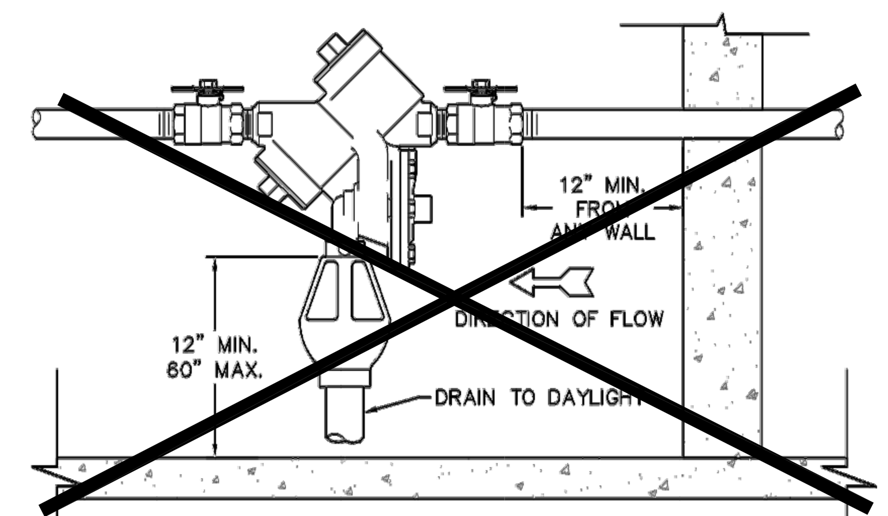

NOTE:
MUST BE MIN. 36" AWAY FROM ANY ELECTRICAL PANEL

INDOOR HORIZONTAL INSTALLATION

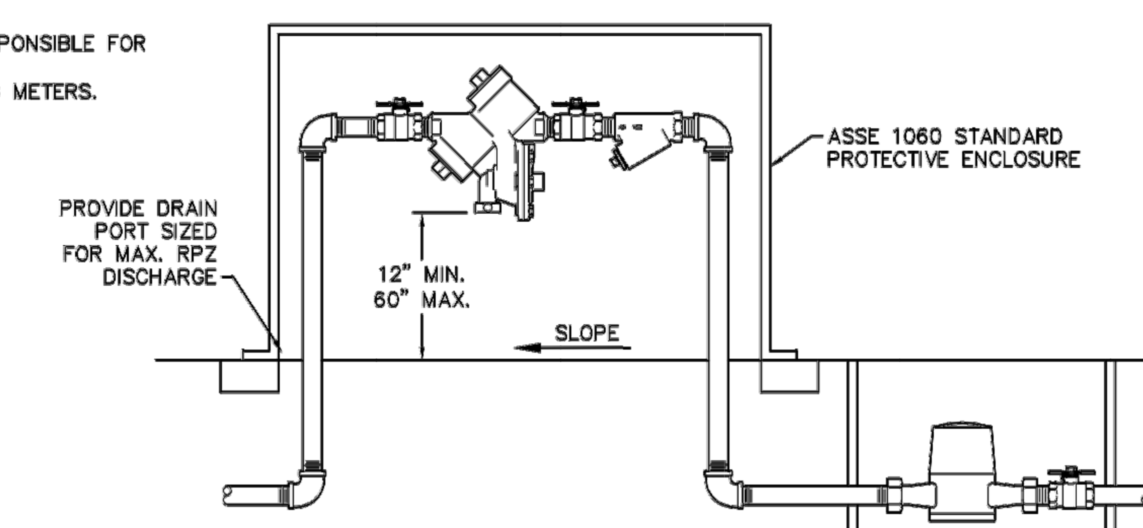

NOTE:
1. MUST BE MIN. 36" AWAY FROM ANY ELECTRICAL PANEL.
2. VALVE REQUIRED DOWNSTREAM OF BACKFLOW ASSEMBLY.
3. VERTICAL INSTALLATION SHALL BE DESIGNED AND SUBMITTED TO CFPUA ESMD FOR APPROVAL.

OUTDOOR HORIZONTAL INSTALLATION

REDUCED PRESSURE PRINCIPLE ASSEMBLY

NOT TO SCALE

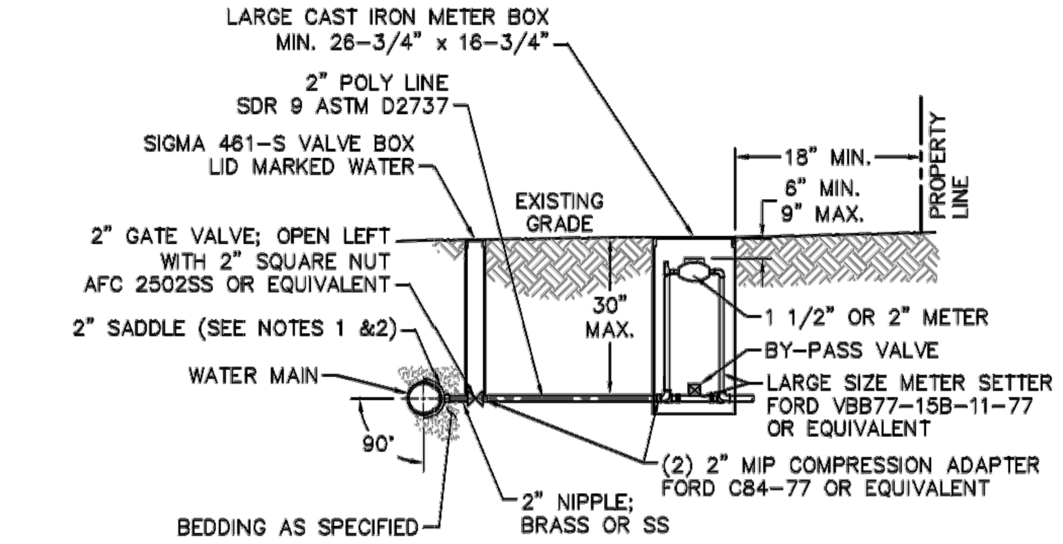

NOTES:
1. ALL SERVICES SHALL BE INSTALLED PERPENDICULAR TO MAIN.
2. SERVICE SADDLES ON PVC MAINS SHALL BE WIDE BAND BRASS BODY: McDONALD 3800, FORD S90 (DOUBLE STRAP) OR EQUIVALENT.
3. METER BOXES SUSCEPTIBLE TO TRAFFIC SHALL CONFORM TO ASTM A48, CLASS 30B AND AASHTO H20 LOAD RATING STANDARDS (OLDCASTLE PRECAST MODEL B1730 OR APPROVED EQUIVALENT).
4. METER BOXES SUSCEPTIBLE TO INCIDENTAL, NON-DELIBERATE TRAFFIC SHALL CONFORM TO ANSI/SCTE 77 TIER 15 LOAD RATING STANDARDS (SYNERTECH MODEL DUO 17x30 OR APPROVED EQUIVALENT).
5. NON-TRAFFIC METER BOXES SHALL BE SIGMA MB2203 OR APPROVED EQUIVALENT.
6. 3" CLEAN FILL REQUIRED ALL AROUND 2" POLY SERVICE LINE.

LARGE METER

FOR 1-1/2" OR 2" WATER SERVICES

NOT TO SCALE

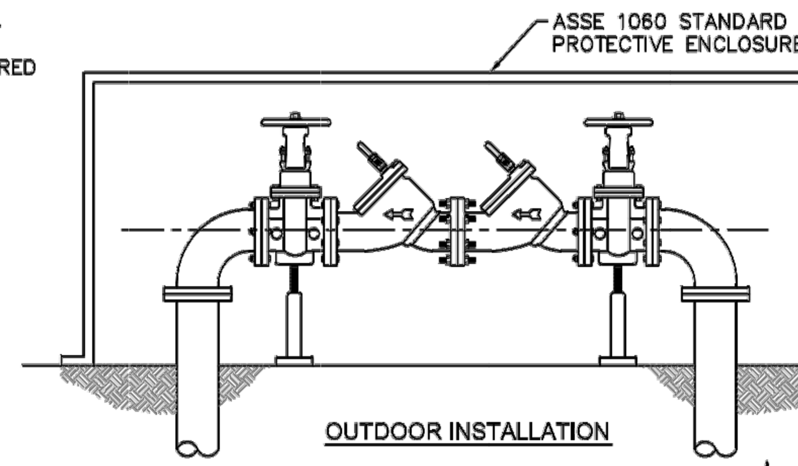

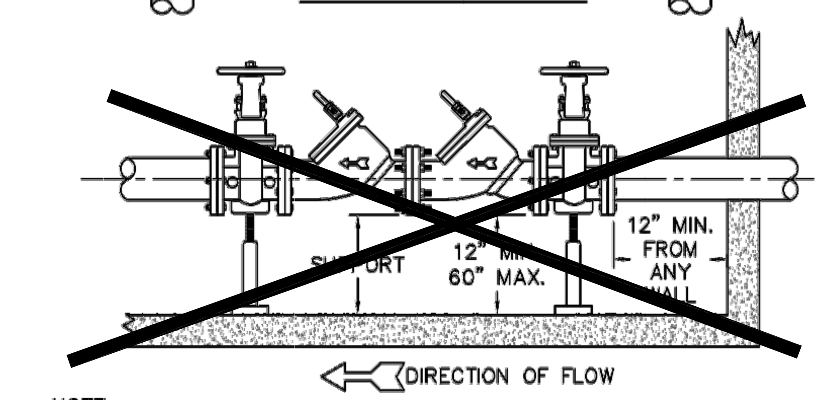

NOTE:
1. MUST BE MIN. 36" AWAY FROM ANY ELECTRICAL PANEL.
2. VALVE REQUIRED DOWNSTREAM OF BACKFLOW ASSEMBLY.
3. VERTICAL INSTALLATION SHALL BE DESIGNED AND SUBMITTED TO CFPUA ESMD FOR APPROVAL

INDOOR INSTALLATION

DOUBLE CHECK VALVE ASSEMBLY

NOT TO SCALE

GENERAL NOTES:
1. NO EXCAVATED MATERIAL SHALL BE PLACED IN ANY STREAM, DITCH OR DRAINAGE-WAY.
2. THE CONTRACTOR IS RESPONSIBLE FOR LOCATING ALL UNDERGROUND UTILITIES BEFORE ANY CONSTRUCTION BEGINS.
3. THE CONTRACTOR IS RESPONSIBLE FOR TEMPORARY SEDIMENT AND EROSION CONTROL MEASURES WHILE CONSTRUCTION IS IN PROGRESS.
4. THE CONTRACTOR IS RESPONSIBLE FOR STABILIZATION OF ALL DISTURBED AREAS.
5. THE CONTRACTOR IS RESPONSIBLE FOR LAY DOWN AND STOCKPILE AREAS (TO ARRANGE AND ENSURE COMPLIANCE WITH ALL LOCAL AND STATE REGULATIONS).

THE DETAILS SHOWN HEREON SUPERCEDE CFPUA WRITTEN TECHNICAL SPECIFICATIONS VERSIONS 1.00 - 1.04

REV:	DESCRIPTION:	DATE:
1	Single Service Connection, Double Service Connection, and Large Meter Revised	10/26/12
2	Single Service Connection and Fire Hydrant Details Revised	7/23/13

CFPUA WATER DISTRIBUTION SYSTEM

STANDARD DETAILS

CAPE FEAR PUBLIC UTILITY AUTHORITY
235 GOVERNMENT CENTER DRIVE
WILMINGTON, NC 28403
OFFICE: (910)332-6560

Stewardship. Sustainability. Service.

DATE:	1/9/12
SCALE:	N/A
DRAWN BY:	CFPUA
CHECKED BY:	CFPUA
PROJECT NO.:	

SHEET NO: WSD-1

DATE	NO	COMMENT

REVISIONS

CRISER TROUTMAN TANNER
CONSULTING ENGINEERS
3809 Peachtree Ave., Suite 102
Wilmington, NC 28403
910.397.2929 Ph.
910.397.2971 Fax
www/ctt@cttengineering.com
Firm License Number: F-0113

CRISER TROUTMAN TANNER

OWNER / DEVELOPER / APPLICANT
CAROLINAS ORAL & FACIAL SURGERY CENTER, INC.
ADDRESS:
1122 MEDICAL CENTER DRIVE
WILMINGTON, NORTH CAROLINA 28403
PH: 910-762-2618
FX: 910-763-5173

PROJECT:
CAROLINAS ORAL & FACIAL SURGERY CENTER
ADDRESS:
1305 PHYSICIANS DRIVE
WILMINGTON, NORTH CAROLINA 28403

SEAL

NOT FOR CONSTRUCTION

DESIGNED BY:	MARK T. ARCURI
DRAWN BY:	HWL
QUALITY CONTROL:	MTA
SCALE:	NOTED
FILE NUMBER:	7517.00
DATE:	03-16-16

CIVIL DETAILS

SHEET NUMBER: C8