CAROLINA BAY AT AUTUMN HALL, PHI
OLD GARDEN ROAD MANSION FLATS
REVISION

MX DEVELOPMENT

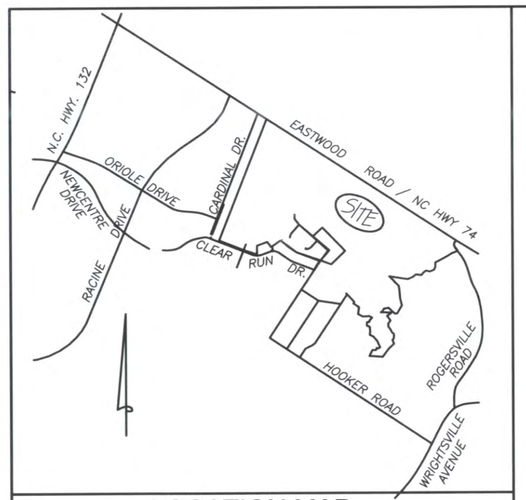

LOCATION MAP
NOT TO SCALE

REV	7.13.16	DELETED BUILDING TYPE 1. REV. NUMBER OF REMAINING BUILDINGS AND LOT LAYOUT, REV. GRADES. REV. SITE DATA.	
REV	6/13/12	ADDED LOT NUMBERS	BY
SYMBOL	DATE	DESCRIPTION	BY

REVISIONS

©2016 NORRIS & TUNSTALL

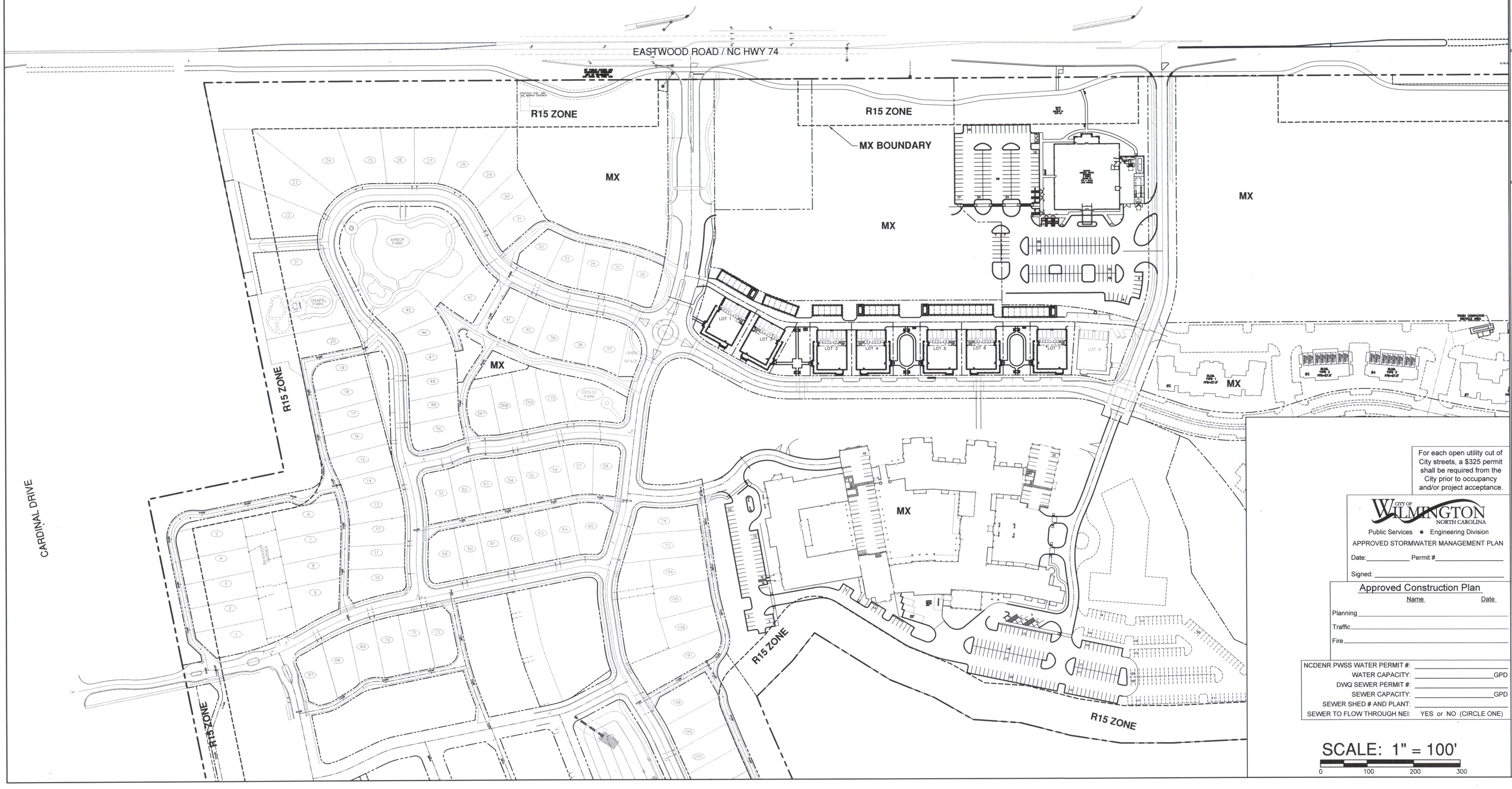

For each open utility cut of City streets, a $325 permit shall be required from the City prior to occupancy and/or project acceptance.

CITY OF WILMINGTON NORTH CAROLINA
Public Services • Engineering Division
APPROVED STORMWATER MANAGEMENT PLAN
Date:_____ Permit #_____
Signed:_____

Approved Construction Plan

	Name	Date
Planning		
Traffic		
Fire		

NCDENR PWSS WATER PERMIT #: _____
WATER CAPACITY: _____ GPD
DWQ SEWER PERMIT #: _____
SEWER CAPACITY: _____ GPD
SEWER SHED # AND PLANT: _____
SEWER TO FLOW THROUGH NEI: YES or NO (CIRCLE ONE)

SCALE: 1" = 100'
0 100 200 300

COVER SHEET
CAROLINA BAY AT AUTUMN HALL, PHI
OLD GARDEN ROAD MANSION FLATS REVISION
AUTUMN HALL TOWN CENTER
WILMINGTON, NORTH CAROLINA 28403

OWNER:
CAROLINA BAY OF WILMINGTON, LLC
BILL SCHOETTELKOTTE
DIRECTOR OF CONSTRUCTION
2334 S. 41ST STREET
WILMINGTON, NC 28403
910 815-3122

NORRIS & TUNSTALL
CONSULTING ENGINEERS, INC.
1127 FLORAL PARKWAY
SUITE 300 & 400
WILMINGTON, NC, 28403
PHONE (910) 343-9653
FAX (910) 343-9604
licence #C-3641

16033

DES. JST
CKD. JPN
DRWN. NKS
DATE 7/13/16

NORTH CAROLINA PROFESSIONAL SEAL 19851 ENGINEER JOHN S. TUNSTALL 7/13/16

C0

ojects\2005\05150 Autumn Hall Muli-Use\05150 Plans\dwg\05150.master.r31.dwg, 7/13/2016 3:03:32 PM

BUILDING DATA

MANSION FLAT CONDOMINIUM	STORIES	AREA	QUANTITY	HEIGHT	CONSTRUCTION TYPE	NO. OF UNITS	BEDROOMS PER UNIT	ROOF AREA SF/ BUILDING	PARKING PER BUILDING	APPROX. BLDG. DIMS AT WIDEST POINT
TYPE 2	3	13,459 SF	8	39'	VB–SPRINKLED	6	2	6,671 SF	6	95' X 73'
TOTAL		107,672 SF	8			48	96	53,368 SF	48	

GARAGE	AREA	PARKING	HEIGHT	APPROX. BLDG. DIMS	CONSTRUCTION TYPE	GENERATOR
G1	1,748 SF	6	–	23' X 76'	–	352 SF
G2	1,748 SF	6		23' X 76'		NO
G3	1,449 SF	5		23' X 63'		NO
G4	1,748 SF	6		23' X 76'		352 SF
G5	3,197 SF	11		23' X 139'		352 SF
G6	2,323 SF	8		23' X 101'		352 SF
TOTAL	12,213 SF	42				1,408 SF

LEGEND

	PROPERTY LINE/DISTURBED AREA LIMITS
	DISTURBED AREA LIMITS
TSF	TEMPORARY SILT FENCE
SD SD	PROPOSED STORMDRAIN PIPE
W W	PROPOSED WATERLINE
	PROPOSED SANITARY SEWER
X 29.00	PROPOSED FINISH GRADE SPOT ELEVATION
	FLARED END SECTION WITH RIP–RAP ENERGY DISSIPATOR
DI	DROP INLET WITH INLET PROTECTION (DI)
CI	CURB INLET WITH INLET PROTECTION (CI)
	PROPOSED FIRE HYDRANT
35	EXISTING CONTOUR
24.12	EXISTING SPOT ELEVATION
22"P	EXISTING TREE
22"P	EXISTING TREE TO BE REMOVED
22"P	EXISTING TREE TO BE SAVED AND PROTECTED
	ASPHALT
	NEW CONCRETE/SIDEWALK
	OPEN SPACE/COMMON SPACE (INCLUDES SIDEWALK
	FOUNDATION PLANTING AREA

PARCEL ID, MAP ID, ADDRESS, ACREAGE, OWNER

R05000–004–120–000
314707.69.8332.000
5511 OLD GARDEN RD.
COMMON AREA
1.13 ACRES
CAROLINA BAY/GARDEN FLATS HOA INC.

R05000–004–111–000
314707.69.7426.000
5503 OLD GARDEN RD.
LOT 1
0.28 ACRES
CAROLINA BAY PROPERTIES OF WILM. LLC

R05000–004–112–000
314707.69.7397.000
5509 OLD GARDEN RD.
LOT 2
0.24 ACRES
CAROLINA BAY PROPERTIES OF WILM. LLC

R05000–004–113–000
314707.69.9311.000
5519 OLD GARDEN RD.
LOT 3
0.23 ACRES
CAROLINA BAY PROPERTIES OF WILM. LLC

R05000–004–114–000
314707.69.9286.000
5525 OLD GARDEN RD.
LOT 4
0.22 ACRES
CAROLINA BAY PROPERTIES OF WILM. LLC

R05000–004–115–000
314707.79.0262.000
5533 OLD GARDEN RD.
LOT 5
0.22 ACRES
CAROLINA BAY PROPERTIES OF WILM. LLC

R05000–004–116–000
314707.79.1138.000
5537 OLD GARDEN RD.
LOT 6
0.23 ACRES
CAROLINA BAY PROPERTIES OF WILM. LLC

R05000–004–117–000
314707.79.2152.000
5543 OLD GARDEN RD.
LOT 7
0.23 ACRES
CAROLINA BAY PROPERTIES OF WILM. LLC

R05000–004–118–000
314707.79.3028.000
5549 OLD GARDEN RD.
LOT 8
0.23 ACRES
CAROLINA BAY PROPERTIES OF WILM. LLC

R05000–004–119–000
314707.79.4012.000
5553 OLD GARDEN RD.
LOT 9
0.30 ACRES
CAROLINA BAY/GARDEN FLATS HOA, INC

CAROLINA BAY AT AUTUMN HALL

USE:	CONDOMINIUMS
SITE AREA TOTAL:	3.36 ACRES (146,592 SF)
ZONING:	MX
BUILDING SETBACKS MX: (REQUIRED)	20' MIN. FROM MX BOUNDARY 50' MIN. FROM US AND NC HIGHWAYS AND MAJOR THOROUGHFARES INTERIOR: NO MINIMUM, WITHIN 10' OF INTERNAL STREET R/W PREFERED. 20' MIN. BETWEEN BUILDINGS
BUILDING SETBACKS MX: (PROPOSED)	390'± MIN. FROM MX BOUNDARY NORTH
CAMA LAND USE:	WATERSHED RESOURCE PROTECTION
DISTURBED AREA:	3.42 ACRES
BUILDING SIZE:	REFER TO CHART PROVIDED
BUILDING LOT COVERAGE:	44.73%

PARKING REQUIREMENT MAXIMUM, NO MINUMUM REQUIREMENT IN MX ZONE
PARKING REQUIRED:
RESIDENTIAL: 2.5 SPACES PER UNIT MAX. 2.0 SPACES MIN. (2 BEDROOM)
RESIDENTIAL: 48 UNITS X 2.5 = 120 SPACES MAX.
48 UNITS X 2.0 = 96 SPACES MIN.

PARKING PROVIDED: 96 SPACES
HC PARKING REQUIRED: 4 SPACES PROVIDED: 8 SPACES
BICYCLE PARKING REQUIRED: 5 SPACES PROVIDED: 15 SPACES

IMPERVIOUS AREA:

CONDOS TOTAL:	53,368 SF (ROOF AREA)
GARAGES AND GENERATOR PAD TOTAL:	13,621 SF
ASPHALT, CONCRETE, CURB & GUTTER:	25,000 SF
SIDEWALK:	2,851 SF
TOTAL:	94,840 SF
% SITE IMPERVIOUS AREA:	64.70%

LANDSCAPING: (SEE LANDSCAPE PLAN)
15 TREES PER DISTURBED ACRE
LANDSCAPING REQUIREMENTS FOR MX ZONE ARE PER O&I REGULATIONS
INTERIOR LANDSCAPING REQUIRED: 12% = 3,120 SF
(26,000 SF ASPHALT, CONCRETE CURB AND GUTTER)
INTERIOR LANDSCAPING PROVIDED: 3,200 SF

FOUNDATION PLANTING REQUIREMENTS:
B1: 73 X 39 X .12 = 342 SF
95 X 39 X .12 =445 SF
B2: 73 X 39 X .12 = 342 SF
B3: 73 X 39 X .12 = 342 SF
B4: 73 X 39 X .12 = 342 SF
B5: 73 X 39 X .12 = 342 SF
B6: 73 X 39 X .12 = 342 SF
B7: 73 X 39 X .12 = 342 SF
B8: 73 X 39 X .12 = 342 SF
95 X 39 X .12 =445 SF

COMMON SPACE REQUIRED (10% FOR MX): 20,605 SF TOTAL
COMMON SPACE PROVIDED:
OPEN SPACE REQUIRED (25% FOR MX):
OPEN SPACE PROVIDED: 21,942 SF PROVIDED

TRASH REMOVAL SHALL BE BY HANDCART

For each open utility cut of City streets, a $325 permit shall be required from the City prior to occupancy and/or project acceptance.

CITY OF WILMINGTON NORTH CAROLINA
Public Services • Engineering Division
APPROVED STORMWATER MANAGEMENT PLAN
Date:_____ Permit #_____
Signed: _____

Approved Construction Plan

	Name	Date
Planning		
Traffic		
Fire		

NCDENR PWSS WATER PERMIT #: _____
WATER CAPACITY: _____GPD
DWQ SEWER PERMIT #: _____
SEWER CAPACITY: _____GPD
SEWER SHED # AND PLANT: _____
SEWER TO FLOW THROUGH NEI: YES or NO (CIRCLE ONE)

REV	SYMBOL	DATE	DESCRIPTION	BY
		7/13/16	DELETED BUILDING TYPE 1. REV. NUMBER OF REMAINING BUILDINGS AND LOT LAYOUT, REV. GRADES, RELY, SITE DATA.	

©2016 NORRIS & TUNSTALL

SITE DATA PLAN
CAROLINA BAY AT AUTUMN HALL, PHI
OLD GARDEN ROAD MANSION FLATS REVISION
AUTUMN HALL TOWN CENTER
WILMINGTON, NORTH CAROLINA 28403

OWNER:
CAROLINA BAY OF WILMINGTON, LLC
BILL SCHOETTELKOTTE
DIRECTOR OF CONSTRUCTION
2334 S. 41ST STREET
WILMINGTON, NC 28403
910 815-3122

NORRIS & TUNSTALL
CONSULTING ENGINEERS, INC.
1127 FLORAL PARKWAY
SUITE 300 & 400
WILMINGTON, NC, 28403
PHONE (910) 343–9653
FAX (910) 343–9604
licence #C–3641

16033

DES.	JST
CKD.	JPN
DRWN.	NKS
DATE	7/13/16

NORTH CAROLINA REGISTERED PROFESSIONAL SEAL 19851 ENGINEER JOHN S. TUNSTALL II
7/13/16

C1

rojects\2005\05150 Autumn Hall Mul–Use\05150 Plans\dwg\05150_master_c31.dwg, 7/13/2016 3:04:28 PM

LOCATION MAP
NOT TO SCALE

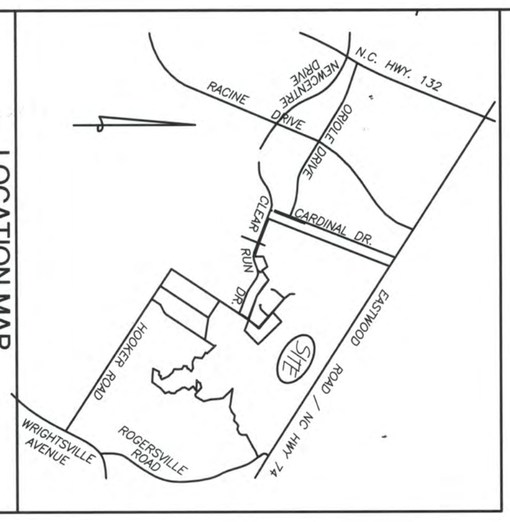

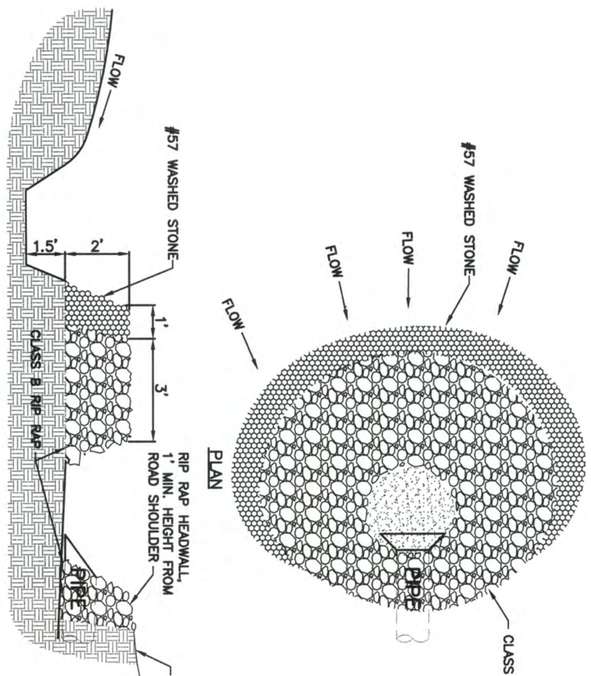

NOTE:
1. PROJECT CONSTRUCTION AND GRADING WILL NOT DISTURB ANY WETLAND RESOURCES.

SCALE: 1" =40'
0 40 80 120

DUNGANNON BLVD.
100' R/W
PVMT. VARIES

CAROLINA BAY DRIVE
60'R/W, 22'PVMT.

AUTUMN HALL
TRACT 3B-2
MAP BOOK 53 PAGE 19

AUTUMN HALL
TRACT 3B-3
MAP BOOK 53 PAGE 19

NOVANT MEDICAL OFFICE BUILDING 2 STORY 40,000 SF FFE = 34.00 (193 PARKS)

OLD GARDEN RD. 50' PUBLIC R/W

TEMP. GRAVEL CONSTRUCTION ENTRANCE.

DISTURBED AREA LIMITS

TIE INTO EXISTING DRIVE ENTRANCE.

DROP FOUNDATION TO BELOW EX. GRADE

RETAINING WALL DESIGN BY OTHERS

12" FES WITH ROCK PIPE INLET PROTECTION I=27.00

12" FES WITH ROCK PIPE INLET PROTECTION I=26.50

PROPERTY LINE SHALL BE DISTURBED AREA LIMITS

INSTALL TEMP. SILT FENCE ALONG ROW.

REMOVE EX. CURB AND GUTTER AND SIDEWALK. TIE NEW ASPHALT AND SIDEWALK INTO EXISTING.

NEW I IN=20.00(E) T=26.00 I=15.93
INSTALL CONCRETE COLLAR AT EX. DI. FORM CURB AROUND EX. DI.

EX. DI-A3NW2 T=26.00

REV	7.13.16	DELETED BUILDING TYPE 1. REV. NUMBER OF REMAINING BUILDINGS AND LOT LAYOUT, REV. GRADES. REV. SITE DATA.
SYMBOL	DATE	DESCRIPTION BY

REVISIONS

© 2016 NORRIS & TUNSTALL

For each open utility cut of City streets, a $325 permit shall be required from the City prior to occupancy and/or project acceptance.

CITY OF WILMINGTON NORTH CAROLINA
Public Services • Engineering Division
APPROVED STORMWATER MANAGEMENT PLAN
Date:_____ Permit #_____
Signed:_____

Approved Construction Plan

	Name	Date
Planning		
Traffic		
Fire		

NCDENR PWSS WATER PERMIT #:
WATER CAPACITY: _____ GPD
DWQ SEWER PERMIT #:
SEWER CAPACITY: _____ GPD
SEWER SHED # AND PLANT:
SEWER TO FLOW THROUGH NEI: YES or NO (CIRCLE ONE)

C2

JOHN S. TUNSTALL — NORTH CAROLINA — PROFESSIONAL ENGINEER — SEAL 19851

16033

DES. JST
CKD. JPN
DRWN. NKS
DATE 7/13/16

NORRIS & TUNSTALL
CONSULTING ENGINEERS, INC.
902 MARKET STREET
WILMINGTON, NC, 28401
PHONE (910) 343-9653
FAX (910) 343-9604
licence #C-3641

OWNER:
CAROLINA BAY OF WILMINGTON, LLC
BILL SCHOETTELKOTTE
DIRECTOR OF CONSTRUCTION
2334 S. 41ST STREET
WILMINGTON, NC 28403
910 815-3122

GRADING, DRAINAGE AND EROSION CONTROL PLAN
CAROLINA BAY AT AUTUMN HALL, PHI
OLD GARDEN ROAD MANSION FLATS REVISION
AUTUMN HALL TOWN CENTER
WILMINGTON, NORTH CAROLINA 28403

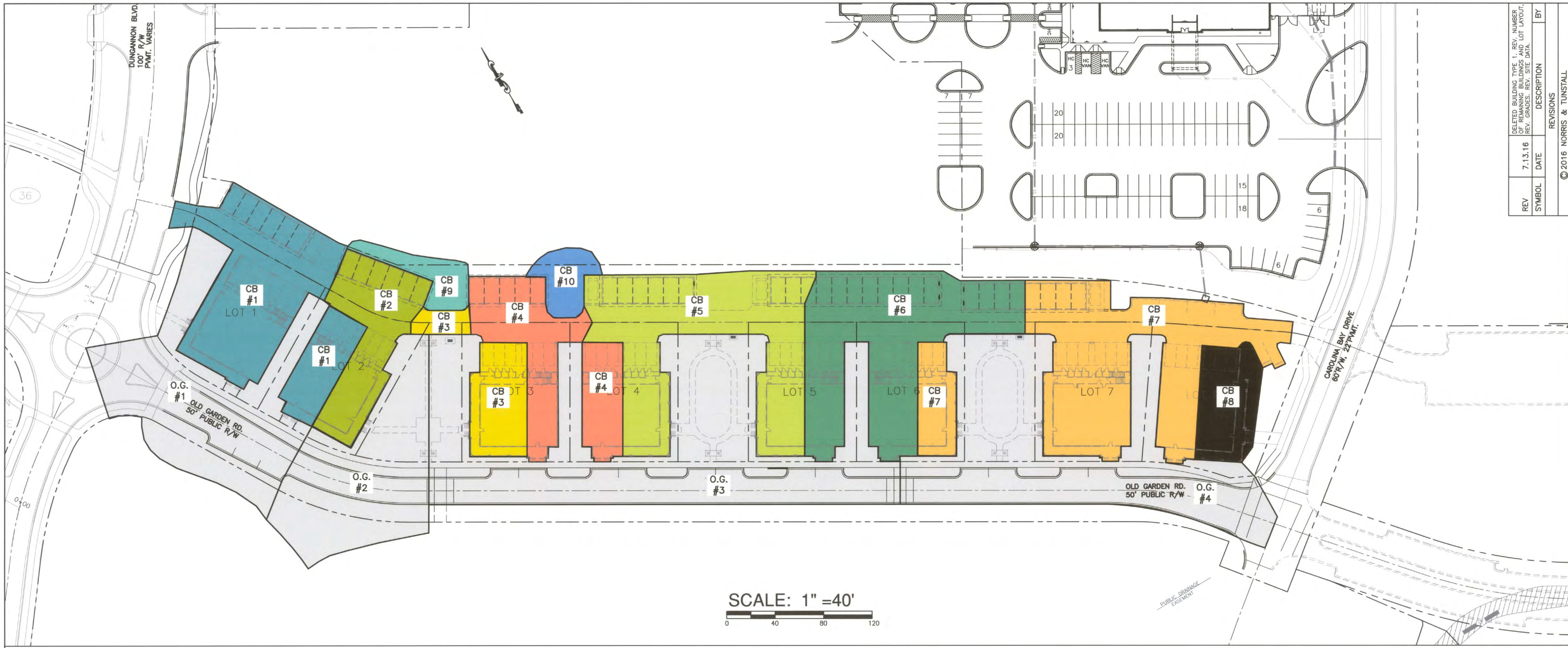

SCALE: 1" =40'

0 40 80 120

DRAINAGE AREA TABLE

	AREA	IMP.
O.G. #1	18,243 SF	7,527 SF
O.G. #2	14,408 SF	3,914 SF
O.G. #3	30,697 SF	14,235 SF
O.G. #4	23,571 SF	12,075 SF
C.B. #1	16,630 SF	15,802 SF
C.B. #2	6,887 SF	6,887 SF
C.B. #3	5,220 SF	5,220 SF
C.B. #4	9,795 SF	9,795 SF
C.B. #5	16,941 SF	15,360 SF
C.B. #6	16,554 SF	16,100 SF
C.B. #7	20,867 SF	20,867 SF
C.B. #8	4,558 SF	3,536 SF
C.B. #9	2,275 SF	0 SF
C.B. #10	2,171 SF	0 SF

CITY OF WILMINGTON NORTH CAROLINA
Public Services • Engineering Division
APPROVED STORMWATER MANAGEMENT PLAN
Date:_____ Permit #_____
Signed: _____

Approved Construction Plan

	Name	Date
Planning		
Traffic		
Fire		

NCDENR PWSS WATER PERMIT #: _____
WATER CAPACITY: _____GPD
DWQ SEWER PERMIT #: _____
SEWER CAPACITY: _____GPD
SEWER SHED # AND PLANT: _____
SEWER TO FLOW THROUGH NEI: YES or NO (CIRCLE ONE)

For each open utility cut of City streets, a $325 permit shall be required from the City prior to occupancy and/or project acceptance.

REV	DATE	DESCRIPTION	BY
SYMBOL	7.13.16	DELETED BUILDING TYPE 1, REV. NUMBER OF REMAINING BUILDINGS AND LOT LAYOUT, REV. GRADES. REV. SITE DATA.	

© 2016 NORRIS & TUNSTALL

DRAINAGE AREA PLAN
CAROLINA BAY AT AUTUMN HALL, PHI
OLD GARDEN ROAD MANSION FLATS REVISION
AUTUMN HALL TOWN CENTER
WILMINGTON, NORTH CAROLINA 28403

OWNER:
CAROLINA BAY OF WILMINGTON, LLC
BILL SCHOETTELKOTTE
DIRECTOR OF CONSTRUCTION
2334 S. 41ST STREET
WILMINGTON, NC 28403
910 815 3122

NORRIS & TUNSTALL
CONSULTING ENGINEERS, INC.
902 MARKET STREET
WILMINGTON, NC, 28401
PHONE (910) 343-9653
FAX (910) 343-9604
licence #C-3641

16033

DES. JST
CKD. JPN
DRWN. NKS
DATE 7/13/16

NORTH CAROLINA PROFESSIONAL SEAL 19851 ENGINEER JOHN S. TUNSTALL

C2.1

Projects\2015\15150 Autumn Hall Multi-Use\15150 Plans\dwg\15150-master.r31.dwg, 7/13/2016 3:16:15 PM

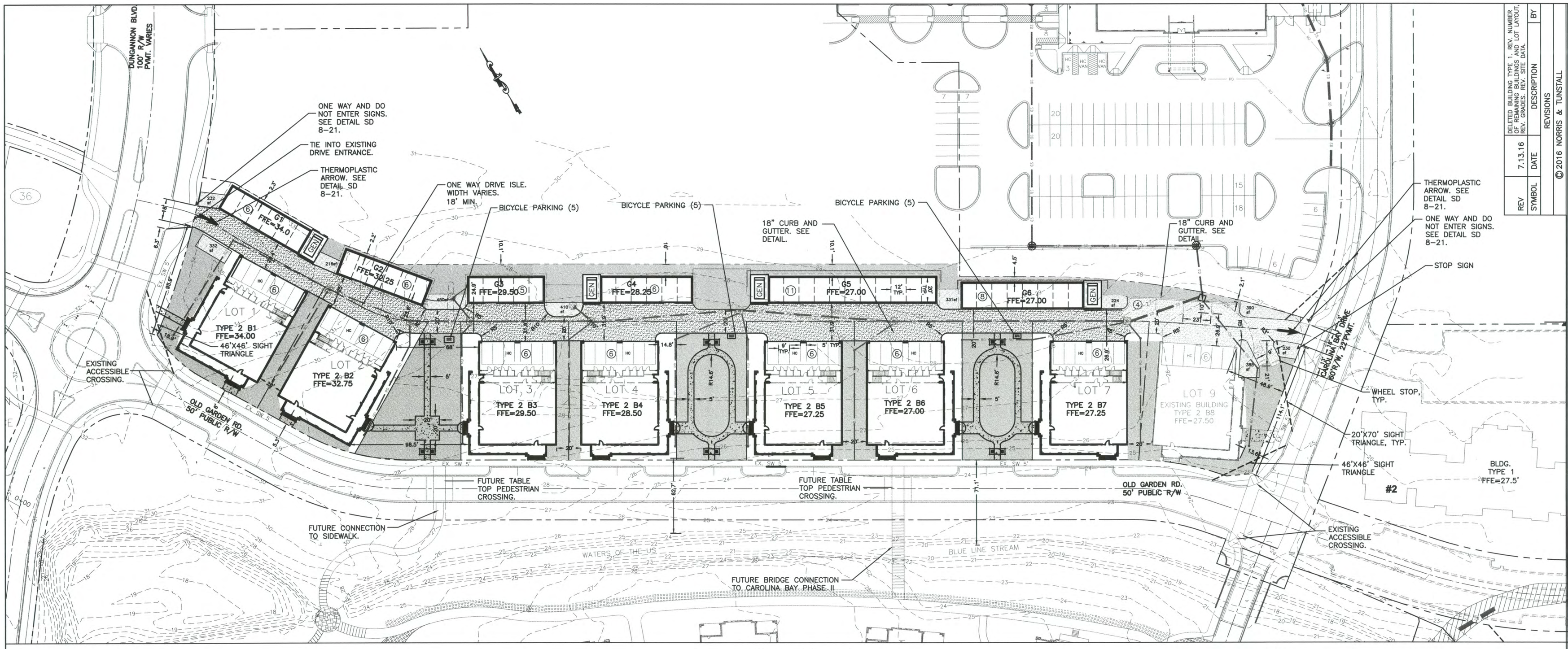

SCALE: 1" =40'

0 40 80 120

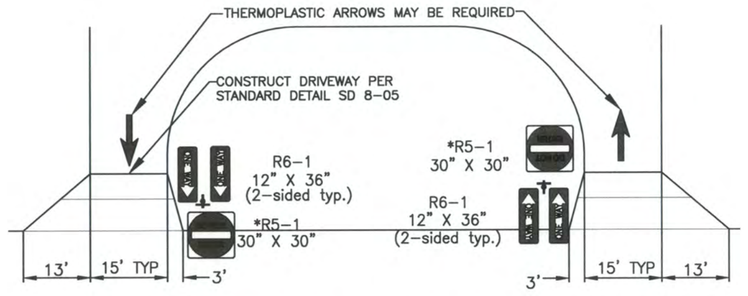

*SEE ENLARGEMENT BELOW RIGHT
STANDARD ONE-WAY DRIVEWAY PAIR (no curb on street)

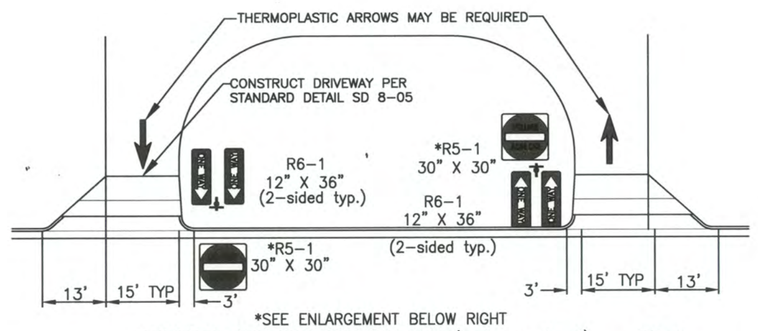

*SEE ENLARGEMENT BELOW RIGHT
STANDARD ONE-WAY DRIVEWAY PAIR (curb on street)

*R5-1

STANDARD ONE-WAY DRIVEWAY
SD 8-21

LEGEND

- ASPHALT
- NEW CONCRETE/SIDEWALK
- OPEN SPACE/COMMON SPACE (INCLUDES SIDEWALK)
- FOUNDATION PLANTING AREA

NOTES:
1. TRASH REMOVAL SHALL BE BY HANDCART
2. IF THESE UNITS ARE SOLD AT ANY POINT, THE BUYER MUST RECEIVE A SUBDIVISION STREET DISCLOSURE STATEMENT.

For each open utility cut of City streets, a $325 permit shall be required from the City prior to occupancy and/or project acceptance.

CITY OF WILMINGTON NORTH CAROLINA
Public Services • Engineering Division
APPROVED STORMWATER MANAGEMENT PLAN
Date:_____ Permit #_____
Signed: _____

Approved Construction Plan

	Name	Date
Planning		
Traffic		
Fire		

NCDENR PWSS WATER PERMIT #: _____
WATER CAPACITY: _____GPD
DWQ SEWER PERMIT #: _____
SEWER CAPACITY: _____GPD
SEWER SHED # AND PLANT: _____
SEWER TO FLOW THROUGH NEI: YES or NO (CIRCLE ONE)

REV	DATE	DESCRIPTION	BY
	7.13.16	DELETED BUILDING TYPE 1, REV. NUMBER OF REMAINING BUILDINGS AND LOT LAYOUT. REV. GRADES. REV. SITE DATA.	

REVISIONS

© 2016 NORRIS & TUNSTALL

LAYOUT PLAN
CAROLINA BAY AT AUTUMN HALL, PHI
OLD GARDEN ROAD MANSION FLATS REVISION
AUTUMN HALL TOWN CENTER
WILMINGTON, NORTH CAROLINA 28403

OWNER:
CAROLINA BAY OF WILMINGTON, LLC
BILL SCHOETTELKOTTE
DIRECTOR OF CONSTRUCTION
2334 S. 41ST STREET
WILMINGTON, NC 28403
910 815-3122

NORRIS & TUNSTALL
CONSULTING ENGINEERS, INC.
902 MARKET STREET
WILMINGTON, NC, 28401
PHONE (910) 343-9653
FAX (910) 343-9604
licence #C-3641

16033

DES. JST
CKD. JPN
DRWN. NKS

DATE 7/13/16

NORTH CAROLINA PROFESSIONAL SEAL 19851 ENGINEER JOHN S. TUNSTALL

C3

J:\Projects\2005\05150 Autumn Hall Muli-Use\05150 Plans\dwg\05150_master_r31.dwg, 7/13/2016 3:07:11 PM

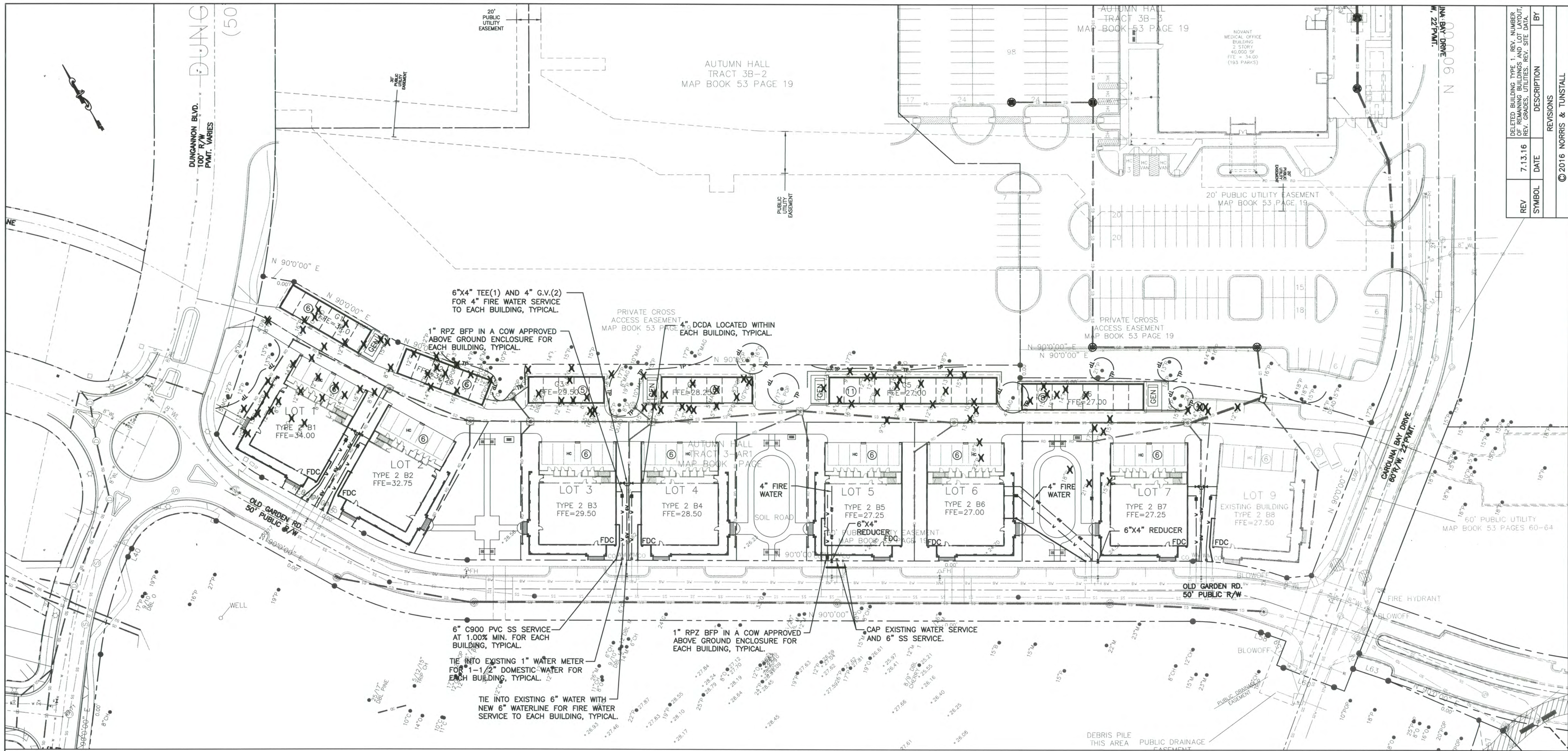

SCALE: 1" =40'

0 40 80 120

UTILITY NOTES FOR FIRE HYDRANTS:

1. FIRE HYDRANTS MUST BE WITHIN 150' OF THE FIRE DEPARTMENT CONNECTION.
2. THE FIRE DEPARTMENT CONNECTION MUST BE WITHIN 40' OF FIRE APPARATUS PLACEMENT.
3. LANDSCAPING AND PARKING CANNOT BLOCK OR IMPEDE THE FIRE DEPARTMENT CONNECTIONS OR FIRE HYDRANTS. A 3' CLEAR SPACE SHALL BE MAINTAINED AROUND THE CIRCUMFERENCE OF THE FIRE HYDRANT CONNECTION AND THE FIRE HYDRANT.
4. FIRE HYDRANTS MUST BE LOCATED WITHIN 8' OF THE CURB.
5. NEW HYDRANTS MUST BE AVAILABLE FOR USE PRIOR TO CONSTRUCTION OF THE BUILDINGS.
6. NEW HYDRANTS MUST BE BROUGHT INTO SERVICE PRIOR TO COMBUSTIBLE MATERIALS BEING DELIVERED TO THE JOB SITE.
7. THE CONTRACTOR SHALL MAINTAIN AN ALL WEATHER ACCESS FOR EMERGENCY VEHICLES AT ALL TIMES DURING CONSTRUCTION.
8. TEMPORARY STREET SIGNS SHALL BE INSTALLED AT EACH STREET INTERSECTION WHEN CONSTRUCTION OF NEW ROADWAYS ALLOWS PASSAGE BY VEHICLES.
9. UNDERGROUND FIRE LINE AND PRIVATE WATER MAINS MUST BE PERMITTED AND INSPECTED BY THE WILMINGTON FIRE DEPARTMENT FROM THE PUBLIC RIGHT-OF-WAY TO THE BUILDING. CONTACT THE WILMINGTON FIRE DEPARTMENT DIVISION OF FIRE AND LIFE SAFETY AT 910-343-0696 FOR ADDITIONAL INFORMATION.
10. A MINIMUM OF 5' SHALL SEPARATE UNDERGROUND FIRE LINES OR PRIVATE WATER MAINS FROM OTHER UNDERGROUND UTILITIES.
11. HYDRANTS SHALL BE OF SUFFICIENT NUMBERS TO ACCOMODATE BASE FIRE FLOW REQUIREMENTS OF THE STRUCTURE.
12. BUILDING CONSTRUCTION TYPE: VB SPRINKLED

WATER USAGE: 48 TWO BEDROOM UNITS AT 240 GPD PER UNIT=11,520 GPD
SEWER USAGE: 48 TWO BEDROOM UNITS AT 240 GPD PER UNIT=11,520 GPD

(NCDENR 15A NCAL 2T RULES)

BUILDING TYPE: VB-SPRINKLED

For each open utility cut of City streets, a $325 permit shall be required from the City prior to occupancy and/or project acceptance.

CITY OF WILMINGTON NORTH CAROLINA
Public Services • Engineering Division
APPROVED STORMWATER MANAGEMENT PLAN
Date:_____ Permit #_____
Signed: _____

Approved Construction Plan

	Name	Date
Planning		
Traffic		
Fire		

NCDENR PWSS WATER PERMIT #: _____
WATER CAPACITY: _____ GPD
DWQ SEWER PERMIT #: _____
SEWER CAPACITY: _____ GPD
SEWER SHED # AND PLANT: _____
SEWER TO FLOW THROUGH NEI: YES or NO (CIRCLE ONE)

REV	DATE	DESCRIPTION	BY
	7.13.16	DELETED BUILDING TYPE 1, REV. NUMBER REMARKS, BUILDING LAYOUT, REV. GRADES, UTILITIES, REV. SITE DATA.	

REVISIONS

© 2016 NORRIS & TUNSTALL

UTILITY PLAN
CAROLINA BAY AT AUTUMN HALL, PHI
OLD GARDEN ROAD MANSION FLATS REVISION
AUTUMN HALL TOWN CENTER
WILMINGTON, NORTH CAROLINA 28403

OWNER:
CAROLINA BAY OF WILMINGTON, LLC
BILL SCHOETTELKOTTE
DIRECTOR OF CONSTRUCTION
2334 S. 41ST STREET
WILMINGTON, NC 28403
910 815-3122

NORRIS & TUNSTALL
CONSULTING ENGINEERS, INC.
902 MARKET STREET
WILMINGTON, NC, 28401
PHONE (910) 343-9653
FAX (910) 343-9604
licence #C-3641

16033

DES. JST
CKD. JPN
DRWN. NKS

DATE 7/13/16

NORTH CAROLINA PROFESSIONAL SEAL 19851 ENGINEER JOHN S. TUNSTALL II

C4

...Projects\2005\05150 Autumn Hall Mull-Use\05150 Plans\dwg\05150.master.r31.dwg, 7/13/2016 3:09:38 PM

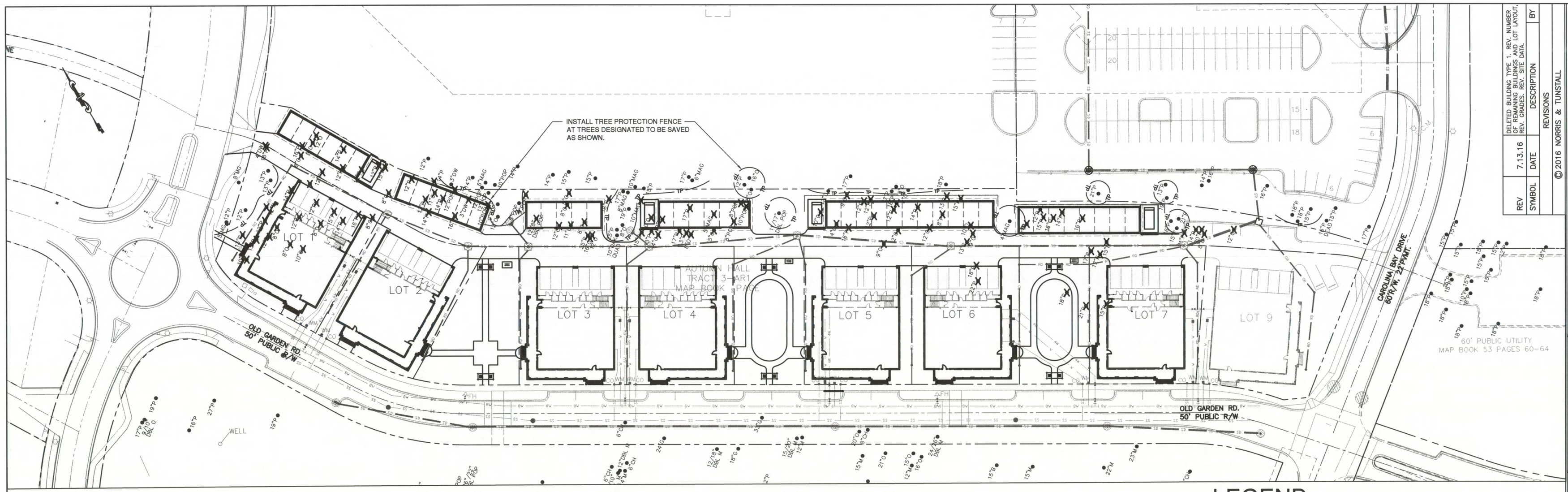

SCALE: 1" =40'

0 40 80 120

LEGEND

22"P ●	EXISTING TREE
22"P ✖	EXISTING TREE TO BE REMOVED
22"P ◉	EXISTING TREE TO BE SAVED AND PROTECTED

TREE REMOVAL TABLE (MAY 2012)

SIGNIFICANT PINES	REGULATED PINES	REGULATED OAKS	REGULATED DOGWOODS	REGULATED POPLARS	REGULATED MAGNOLIAS	SIGNIFICANT MAGNOLIAS
25" (1)	12" (16)	8" (12)	4" (1)	8" (3)	5" (1)	10" (1)
	13" (7)	9" (3)		9" (1)		
	14" (8)	10" (5)		10" (2)		
	15" (6)	11" (2)		12" (2)		
	16" (4)	12" (6)				
	17" (4)	14" (2)				
	18" (6)	15" (2)				
	19" (1)	16" (3)				
	20" (1)					
	21" (2)					
	22" (1)					

15 TREES REQUIRED PER ACRE DISTURBED

TREE REMOVAL TABLE (APRIL 2016)

REGULATED PINES
18" (1)

1. NO LAND DISTURBANCE INCLUDING TREE REMOVAL IS TO OCCUR OUTSIDE THE PROPOSED PROPERTY/DISTURBED AREA LINE SHOWN ON THE PLANS.

2. PROTECTIVE FENCING IS TO BE PROPERLY MAINTAINED THROUGHOUT THE DURATION OF THE PROJECT.

3. LAND CLEARING AND CONSTRUCTION CONTRACTORS SHALL RECEIVE ADEQUATE INSTRUCTION ON TREE PROTECTION REQUIREMENTS AND METHODS.

4. ANY TREES AND / OR AREAS DESIGNATED TO BE PROTECTED MUST BE PROPERLY BARRICADED WITH FENCING AND PROTECTED THROUGHOUT CONSTRUCTION TO INSURE THAT NO CLEARING AND GRADING OR STAGING OF MATERIALS WILL OCCUR IN THOSE AREAS.

5. NO EQUIPMENT IS ALLOWED ON THE SITE UNTIL ALL TREE PROTECTION FENCING AND SILT FENCING HAS BEEN INSTALLED AND APPROVED.

6. EXISTING TREES AND EXISTING VEGETATION WITHIN THE PROJECT AREA SHALL BE SAVED TO THE GREATEST EXTENT POSSIBLE. THE CONTRACTOR IS RESPONSIBLE FOR INSTALLING TREE PROTECTION FENCING AROUND THE EXISTING TREES BEING SAVED PRIOR TO BEGINNING ANY CONSTRUCTION WORK. THE CONTRACTOR SHALL SAWCUT ANY PERIMETER TREE ROOTS THAT CONFLICT WITH GRADING OPERATIONS. EXISTING TREES WILL BE REMOVED FROM THE SITE AS REQUIRED FOR CONSTRUCTION OF PONDS, ROADWAYS, ROAD IMPROVEMENTS, AND UTILITY INSTALLATION. ALL THE EXISTING VEGETATION AND TREES WILL REMAIN OUTSIDE THE DISTURBED AREA/CONSTRUCTION LIMITS.

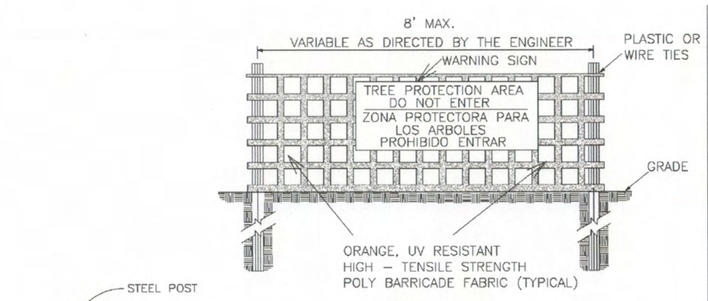

NOTES:

1. THE TREE PROTECTION FENCING SHALL NOT BE VIOLATED FOR THE ENTIRE DURATION OF THE PROJECT WITHOUT APPROVAL FROM URBAN FORESTRY STAFF.
2. WARNING SIGNS TO BE MADE OF DURABLE, WEATHERPROOF MATERIAL. LETTERS TO BE 3" HIGH, MINIMUM, CLEARLY LEGIBLE AND SPACED AS DETAILED.
3. SIGNS SHALL BE PLACED AT 50' MAXIMUM INTERVALS. PLACE A SIGN AT EACH END OF LINEAR TREE PROTECTION AND 50' ON CENTER THEREAFTER. FOR TREE PROTECTION AREAS LESS THAN 100' IN PERIMETER, PROVIDE NO LESS THAN TWO SIGNS PER PROTECTION AREA.
4. ATTACH SIGNS SECURELY TO FENCE POSTS AND FABRIC. MAINTAIN TREE PROTECTION FENCE AND SIGNS THROUGHOUT DURATION OF PROJECT.
5. TREE PROTECTION FENCING AND SIGNAGE SHALL BE REMOVED AFTER CONSTRUCTION.
8. ADDITIONAL SIGNS MAY BE REQUIRED BY CITY OF WILMINGTON, BASED ON ACTUAL FIELD CONDITIONS.

NOTE:
THE CRITICAL ROOT ZONE (CRZ) OF A TREE IS WHERE THE MAJORITY OF A TREE'S ROOTS LAY. 85% OF MOST TREE ROOTS ARE FOUND IN THE TOP 24" OF THE SOIL AND SUPPLY THE MAJORITY OF NUTRIENTS AND WATER. GENERALLY, ROOTS SPREAD OUT 2–3X THE HEIGHT OF THE TREE.

NOTE:
CROWN OF THE TREE IS NEEDED FOR LEAF GROWTH TO PRODUCE OXYGEN, FILTER THE AIR, REDUCE WIND AND SOFTEN NOISE. DO NOT DISFIGURE CROWN WITH INTENSIVE PRUNING.

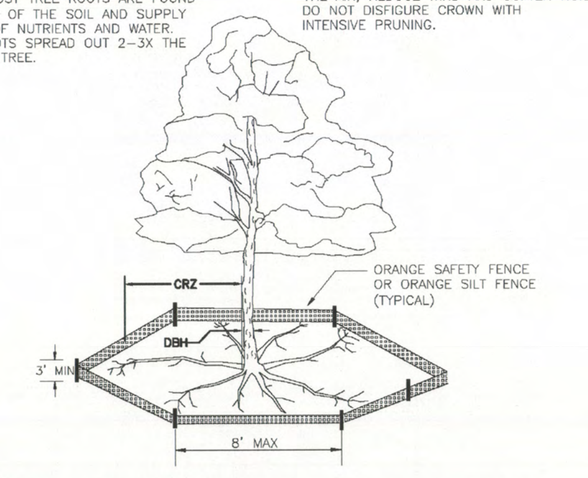

NOTES:
1. PROTECT CRITICAL ROOT ZONE (CRZ) OF TREES PRIOR TO CONSTRUCTION. CLEARLY MARK THE TREES AND ERECT A PROTECTIVE BARRIER AT THE CRZ. BARRIER SHALL BE MAINTAINED UNTIL CONSTRUCTION IS COMPLETE.
2. CRZ RADIUS IS 1 FT PER INCH OF TREE DIAMETER AT BREAST HEIGHT (DBH).
3. IF CONSTRUCTION OCCURS WITHIN THE CRZ, AT LEAST 12" OF MULCH AND/OR LOGGING MATTS SHALL BE PLACED WHERE MACHINERY MANEUVERS TO REDUCE SOIL COMPACTION IN THIS ZONE.
4. WHERE SIDEWALKS AND PATHWAYS PASS WITHIN CRZ, EXTRA CARE SHALL BE TAKEN TO AVOID DAMAGE TO THE ROOTS. ALTERNATE CONSTRUCTION METHODS, SUCH AS A REINFORCED SIDEWALK, SHALL BE IMPLEMENTED AS NECESSARY.
5. FOR ALL TREES, CUTTING OF LARGE STRUCTURAL ROOTS LOCATED NEAR THE BASE OF THE TRUNK IS PROHIBITED. DO NOT COMPACT SOIL BENEATH TREES. NO VEHICLE SHALL BE ALLOWED TO PARK UNDER TREES. NO MATERIALS OR EQUIPMENT SHALL BE STORED BENEATH TREES. DAMAGING THE BARK WITH LAWNMOWERS, CONSTRUCTION EQUIPMENT, OR ANYTHING ELSE IS PROHIBITED. CONTRACTOR SHALL REPAIR DAMAGE TO TREES.
6. FAILING TO INSTALL OR MAINTAIN PROTECTION MEASURES SHALL RESULT IN A STOP WORK ORDER AND FINE OF $500/DAY. DISTURBANCE OTHER THAN THAT ALLOWED ON THE APPROVED PLAN WILL REQUIRE OWNER TO POST A LETTER OF CREDIT FOR 3 YRS FOR TREE MITIGATION.

TREE PROTECTION DETAILS

For each open utility cut of City streets, a $325 permit shall be required from the City prior to occupancy and/or project acceptance.

CITY OF WILMINGTON NORTH CAROLINA
Public Services ● Engineering Division
APPROVED STORMWATER MANAGEMENT PLAN
Date:_____ Permit #_____
Signed: _____

Approved Construction Plan

	Name	Date
Planning		
Traffic		
Fire		

NCDENR PWSS WATER PERMIT #: _____
WATER CAPACITY: _____GPD
DWQ SEWER PERMIT #: _____
SEWER CAPACITY: _____GPD
SEWER SHED # AND PLANT: _____
SEWER TO FLOW THROUGH NEI: YES or NO (CIRCLE ONE)

REV	DATE	DESCRIPTION	BY
	7.13.16	DELETED BUILDING TYPE 1, REV. NUMBER OF REMAINING BUILDINGS AND LOT LAYOUT. REV. GRADES. REV. SITE DATA.	

REVISIONS

©2016 NORRIS & TUNSTALL

TREE PLAN
CAROLINA BAY AT AUTUMN HALL, PHI
OLD GARDEN ROAD MANSION FLATS REVISION
AUTUMN HALL TOWN CENTER
WILMINGTON, NORTH CAROLINA 28403

OWNER:
CAROLINA BAY OF WILMINGTON, LLC
BILL SCHOETTELKOTTE
DIRECTOR OF CONSTRUCTION
2334 S. 41ST STREET
WILMINGTON, NC 28403
910 815-3122

NORRIS & TUNSTALL
CONSULTING ENGINEERS, INC.
902 MARKET STREET
WILMINGTON, NC, 28401
PHONE (910) 343-9653
FAX (910) 343-9604
licence #C-3641

16033

DES.	JST
CKD.	JPN
DRWN.	NKS
DATE	7/13/16

NORTH CAROLINA PROFESSIONAL SEAL 19851 ENGINEER JOHN S. TUNSTALL

C5

rojects\2005\05150 Autumn Hall Mull-Use\05150 Plans\dwg\05150master-31.dwg, 7/13/2016 3:11:27 PM

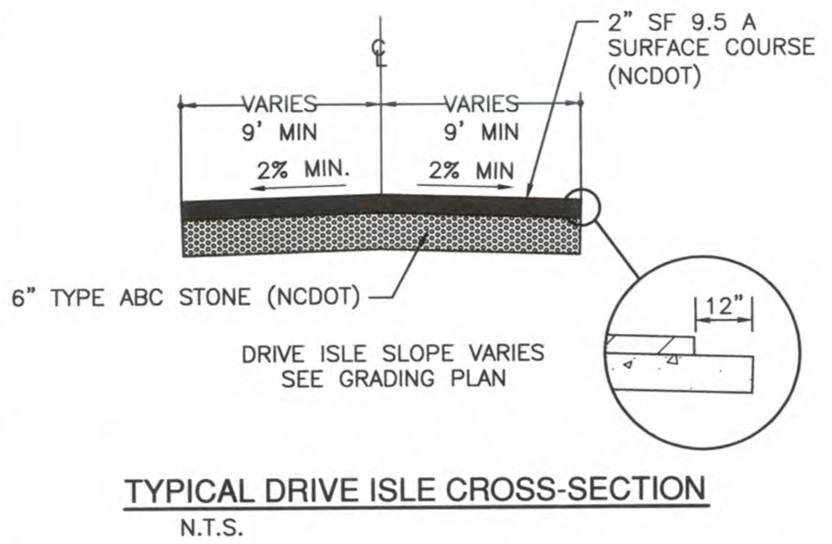

TYPICAL DRIVE ISLE CROSS-SECTION
N.T.S.

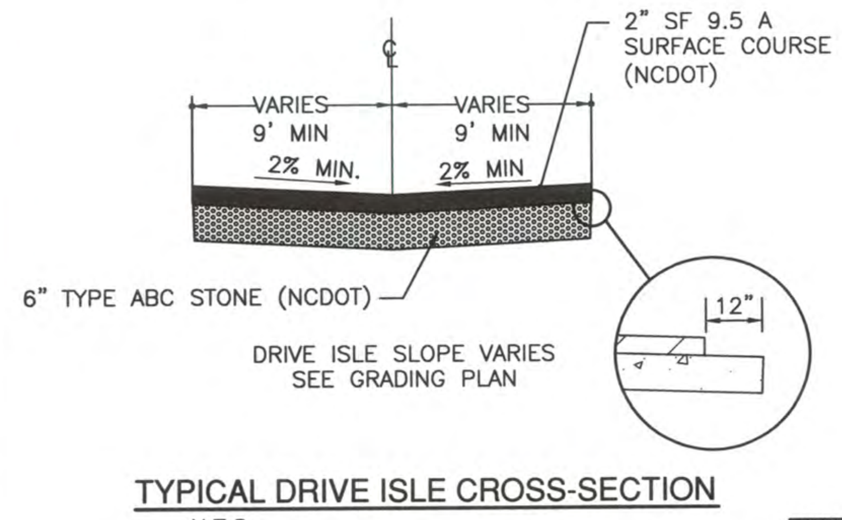

TYPICAL DRIVE ISLE CROSS-SECTION
N.T.S.

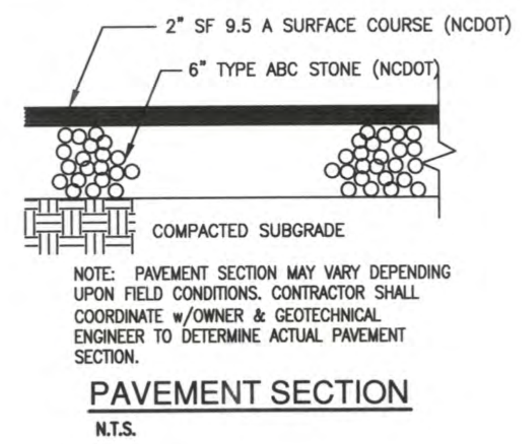

PAVEMENT SECTION
N.T.S.

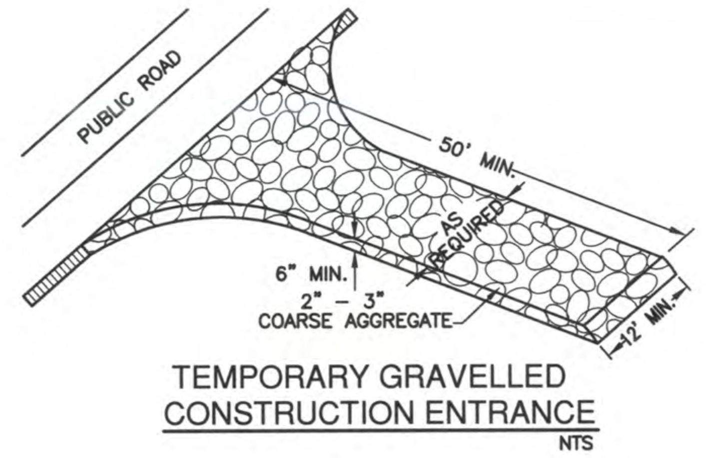

TEMPORARY GRAVELLED CONSTRUCTION ENTRANCE
NTS

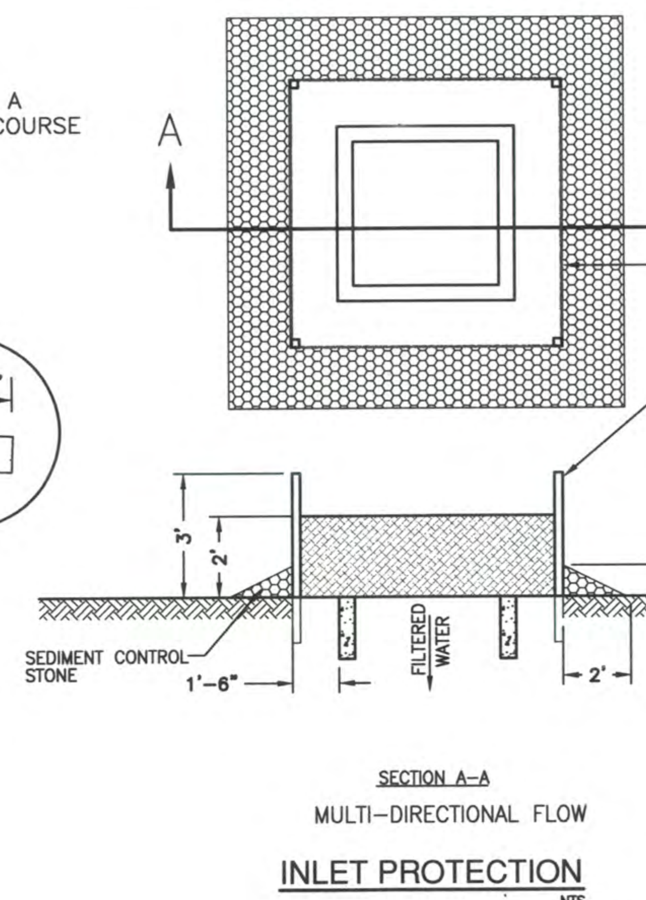

NOTES:

1. SEDIMENT CONTROL STONE SHALL BE #5 OR #57 AND SHALL BE PAID FOR AT THE CONTRACT UNIT PRICE PER TON "SEDIMENT CONTROL STONE." STONE SHALL BE 16" TO 18" DEEP.
2. WIRE MESH SHALL BE HARDWARE CLOTH 19 GAGE MIN. AND SHALL HAVE 1/4" MESH OPENINGS.

INLET PROTECTION
NTS

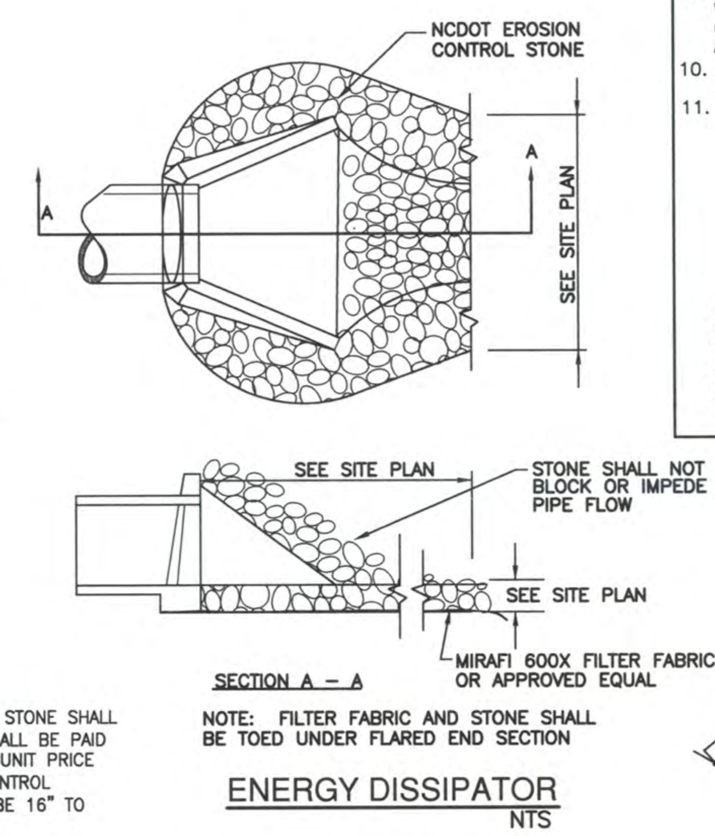

NOTE: FILTER FABRIC AND STONE SHALL BE TOED UNDER FLARED END SECTION

ENERGY DISSIPATOR
NTS

TEMPORARY/PERMANENT GRASS SPECIFICATION

1. CHISEL COMPACTED AREAS AND SPREAD TOPSOIL 3 INCHES DEEP OVER ADVERSE SOIL CONDITIONS.
2. RIP THE ENTIRE AREA TO A 6 INCH DEPTH.
3. REMOVE ALL ROCKS, ROOTS AND OTHER OBSTRUCTIONS LEAVING SURFACES SMOOTH AND UNIFORM.
4. APPLY AGRICULTURAL LIME AND FERTILIZER UNIFORMLY AND MIX WITH SOIL.
   LIME: 45 LBS. PER 1000 S.F.
   PHOSPHOROUS: 20 LBS PER 1000 S.F.
   FERTILIZER: 17 LBS. PER 1000 S.F.
5. CONTINUE TILLAGE UNTIL A WELL PULVERIZED, FIRM, UNIFORM SEED BED IS PREPARED 4–6 INCHES DEEP.
6. SEED ON A FRESHLY PREPARED SEED BED AND COVER SEED LIGHTLY. 2 – 3 LBS PER 1000 S.F. (SEE MIXTURE BELOW)
7. MULCH IMMEDIATELY AFTER SEEDING AND ANCHOR MULCH.
   GRAIN STRAW & HAY AT 75 TO 100 LBS PER 1000 S.F.
   WOOD CHIPS AT 500 LBS. PER 1000 S.F.
   JUTE & MESH AS PER MANUFACTURER
8. ASPHALT FOR ANCHORING MULCH SHALL BE TYPE SS–1 EMULSION AND APPLIED AT A RATE OF 1000 GAL. PER ACRE FOR SLOPE STABILIZATION, AND 150 GAL. PER TON OF STRAW FOR ANCHORING STRAW.
9. INSPECT ALL SEEDED AREAS AND MAKE NECESSARY REPAIRS OR RESEED WITHIN THE PLANTING SEASON, IF POSSIBLE. IF GRASS STAND SHOULD BE OVER 60% DAMAGED, REESTABLISH FOLLOWING ORIGINAL LIME, FERTILIZER AND SEEDING RATES.
10. CONSULT CONSERVATION INSPECTOR ON MAINTENANCE, TREATMENT, AND FERTILIZATION AFTER PERMANENT COVER IS ESTABLISHED.
11. SEED FOR TEMPORARY AND PERMANENT APPLICATIONS SHALL BE:

20%	CARPET GRASS
28%	BERMUDA GRASS
20%	TURF FESCUE
10%	CREEPING RED FESCUE
20%	ANNUAL RYE GRAIN

*BERMUDA SEED SHALL BE HULLED FOR WARM WEATHER PLANTING. PURITY OF SEED SHALL BE A MIN. OF 98% AND GERMINATION SHALL BE A MIN. OF 85%.

ALL DISTURBED AREA SHALL BE SEEDED WITHIN 7–14 DAYS OF THE COMPLETION OF GRADING. SEE EROSION CONTROL AND MAINTENANCE NOTES. CONSULT CONSERVATION ENGINEER OR SOIL CONSERVATION SERVICE FOR ADDITIONAL INFORMATION CONCERNING OTHER ALTERNATIVES FOR VEGETATION OF DENUDED AREAS. THE ABOVE VEGETATION RATES ARE THOSE WHICH DO WELL UNDER LOCAL CONDITIONS, OTHER SEEDING SCHEDULES MAY BE POSSIBLE.

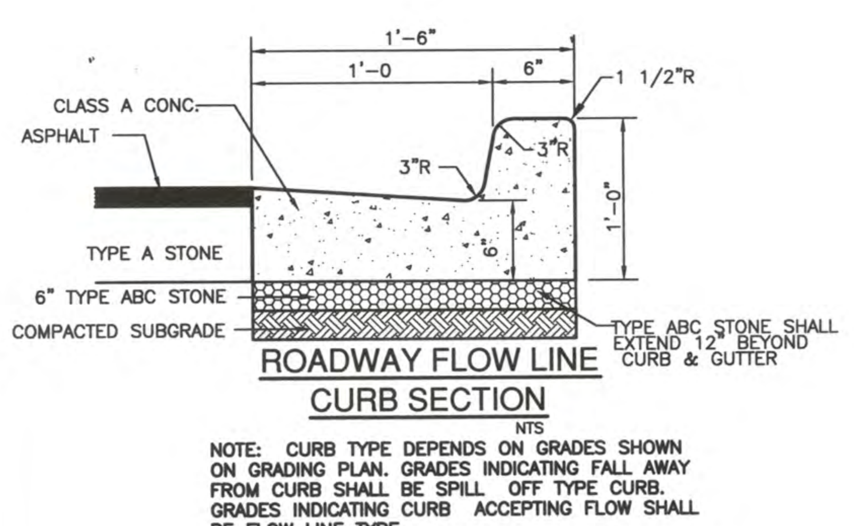

ROADWAY FLOW LINE CURB SECTION
NTS

NOTE: CURB TYPE DEPENDS ON GRADES SHOWN ON GRADING PLAN. GRADES INDICATING FALL AWAY FROM CURB SHALL BE SPILL OFF TYPE CURB. GRADES INDICATING CURB ACCEPTING FLOW SHALL BE FLOW LINE TYPE.

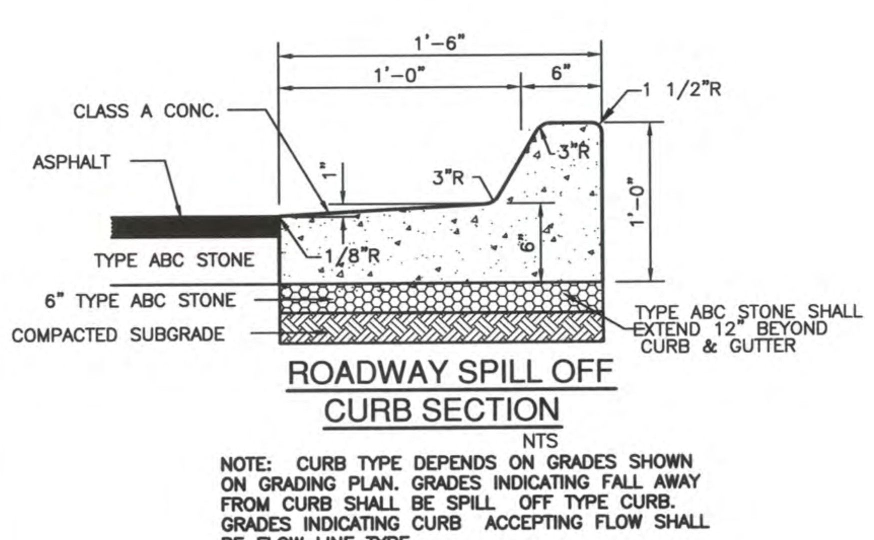

ROADWAY SPILL OFF CURB SECTION
NTS

NOTE: CURB TYPE DEPENDS ON GRADES SHOWN ON GRADING PLAN. GRADES INDICATING FALL AWAY FROM CURB SHALL BE SPILL OFF TYPE CURB. GRADES INDICATING CURB ACCEPTING FLOW SHALL BE FLOW LINE TYPE.

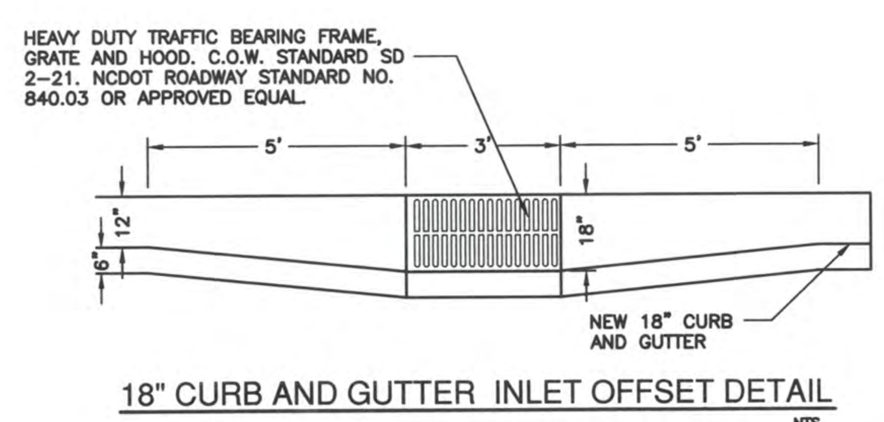

18" CURB AND GUTTER INLET OFFSET DETAIL
NTS

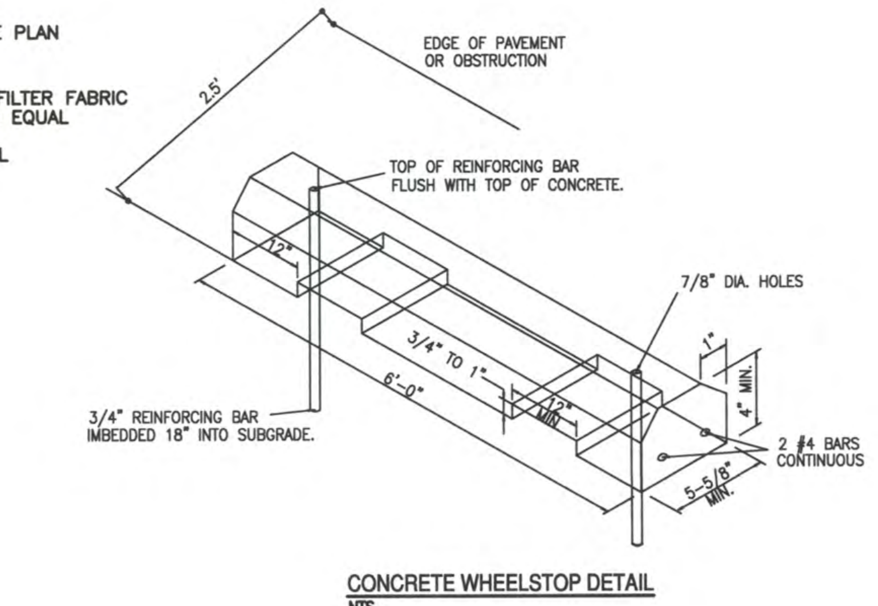

CONCRETE WHEELSTOP DETAIL
NTS

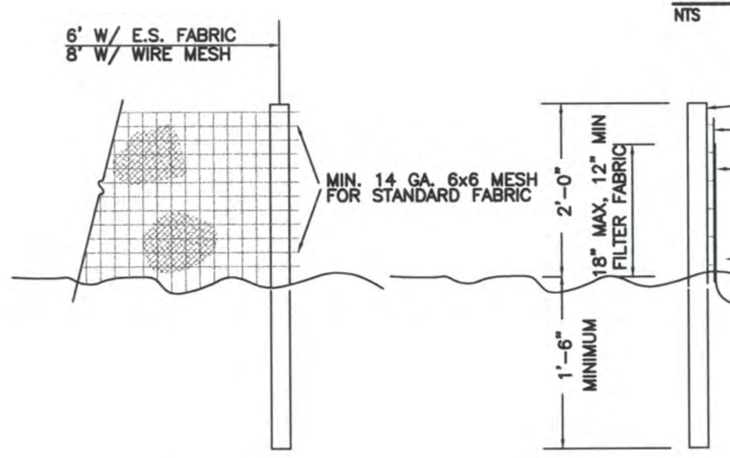

NOTES:

1. SYN. FENCE FABRIC SHALL BE MIN. OF 30" IN WIDTH WITH 30 LB/IN TENSILE STRENGTH FOR STANDARD FABRIC AND 50 LB/IN FOR EXTRA STRENGTH.
2. FABRIC SHALL BE CONTINUOUS LENGTH. IF JOINTS ARE NECESSARY, LAP FABRIC POST TO POST.
3. STEEL POST SHALL BE MIN 4' IN HEIGHT AND BE OF THE SELF–FASTENER STEEL ANGLE TYPE.

TEMPORARY SILT FENCE
NTS

NOTES:
1. SIDEWALK THICKNESS SHALL BE 4" UNLESS NOTED OTHERWISE.
2. CONTRACTION JOINTS (C.J.) SPACE SAME AS SIDEWALK WIDTH.
3. THICKEN SIDEWALK TO 6" AT DRIVEWAYS.
4. THICKEN SIDEWALK TO 6" IN LAST 3' WHERE IT ABUTS PAVEMENT WITH NO CURB.
5. 1/2" EXPANSION JOINT (E.J.) AND SNAP CAP EXPANSION JOINT COVERS ARE REQUIRED AT 50' MAX. AT SIDEWALK JUNCTIONS, AT STRUCTURES, AND AS NOTED ON SITE PLAN.
6. PROVIDE A LAYER OF 15# BLDG. FELT BETWEEN WALK AND ADJACENT PARALLELING CURB OR STRUCTURE.

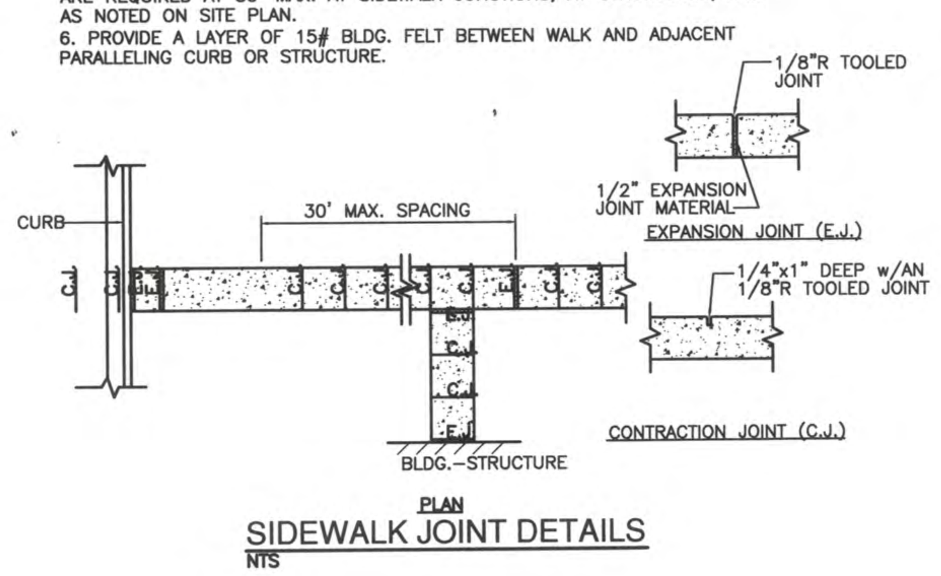

SIDEWALK JOINT DETAILS
NTS

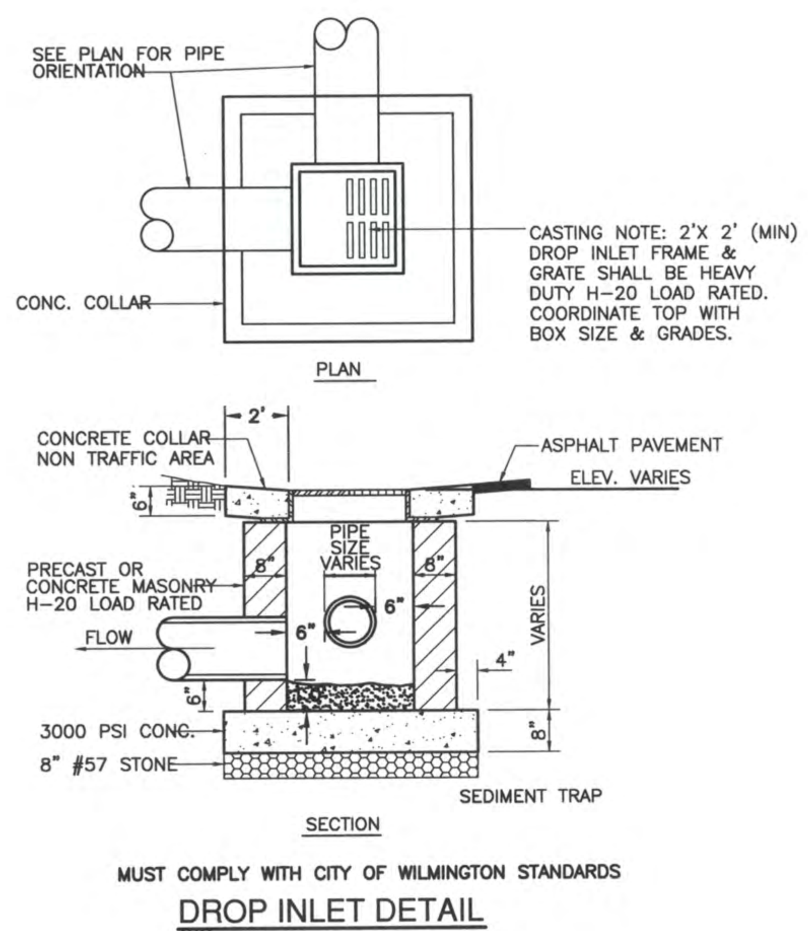

MUST COMPLY WITH CITY OF WILMINGTON STANDARDS

DROP INLET DETAIL
NTS

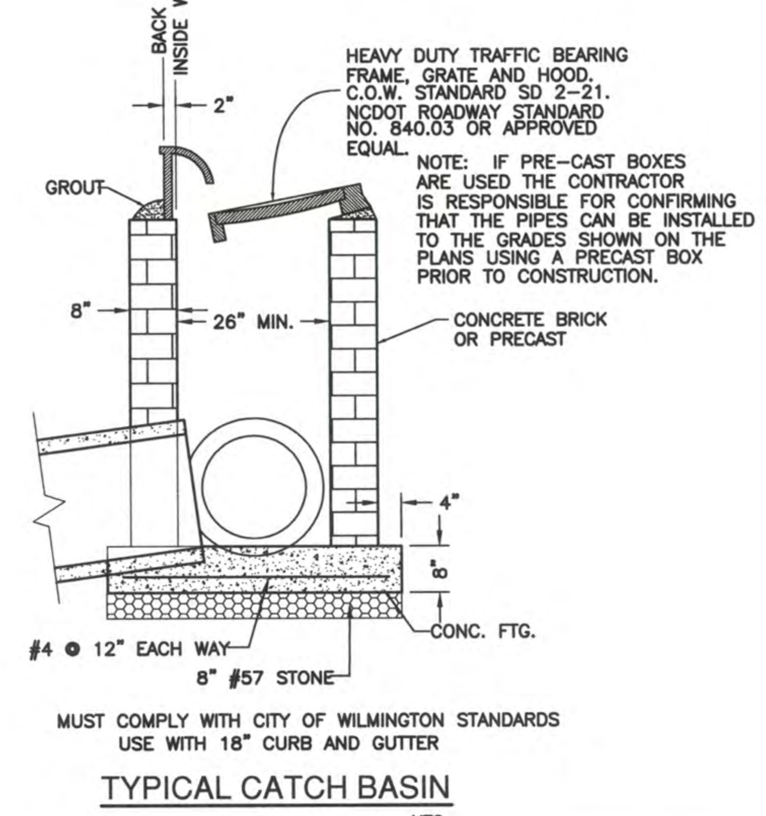

MUST COMPLY WITH CITY OF WILMINGTON STANDARDS USE WITH 18" CURB AND GUTTER

TYPICAL CATCH BASIN
NTS

CITY OF WILMINGTON STANDARD NOTES:

1. CONTACT THE NORTH CAROLINA ONE CALL CENTER PRIOR TO DOING ANY DIGGING AT 1–800–632–4949.
2. PRIOR TO ANY CLEARING, GRADING OR CONSTRUCTION ACTIVITY, TREE PROTECTION FENCING WILL BE INSTALLED AROUND PROTECTED TREES OR GROVES OF TREES AND NO CONSTRUCTION WORKERS, TOOLS, MATERIALS, OR VEHICLES ARE PERMITTED WITHIN THE TREE PROTECTION FENCING;
3. ALL PAVEMENT MARKINGS IN PUBLIC RIGHTS–OF–WAY AND FOR DRIVEWAYS ARE TO BE THERMOPLASTIC AND MEET CITY AND/OR NCDOT STANDARDS.
4. ALL PARKING STALL MARKINGS AND LANE ARROWS WITHIN THE PARKING AREAS SHALL BE WHITE.
5. INSTALL REFLECTORS PER CITY AND NCDOT STANDARDS. TRAFFIC ENGINEERING MUST APPROVE OF PAVEMENT MARKING LAYOUT PRIOR TO ACTUAL STRIPING.
6. ALL TRAFFIC CONTROL SIGNS AND MARKINGS OFF THE RIGHT–OF–WAY ARE TO BE MAINTAINED BY THE PROPERTY OWNER IN ACCORDANCE WITH MUTCD STANDARDS.
7. TRAFFIC CONTROL DEVICES (INCLUDING SIGNS AND PAVEMENT MARKINGS) IN AREAS OPEN TO PUBLIC TRAFFIC ARE TO MEET MUTCD (MANUAL ON UNIFORM TRAFFIC CONTROL DEVICES) STANDARDS.
8. IT SHALL BE THE RESPONSIBILITY OF THE SUBDIVIDER TO ERECT OFFICIAL STREET NAME SIGNS AT ALL INTERSECTIONS ASSOCIATED WITH THE SUBDIVISION IN ACCORDANCE WITH THE TECHNICAL STANDARDS AND SPECIFICATIONS MANUAL. THE SUBDIVIDER MAY ACQUIRE AND ERECT OFFICIAL STREET NAME SIGNS OR MAY CHOOSE TO CONTRACT WITH THE CITY TO INSTALL THE STREET SIGNS AND THE SUBDIVIDER SHALL PAY THE COST OF SUCH INSTALLATION. CONTACT TRAFFIC ENGINEERING AT 341–7888 TO DISCUSS INSTALLATION OF TRAFFIC AND STREET NAME SIGNS. POSTED STREET NAMES MUST BE APPROVED PRIOR TO INSTALLATION OF STREET NAME SIGNS.
9. CONTACT TRAFFIC ENGINEERING AT 341–7888 FORTY–EIGHT HOURS PRIOR TO ANY EXCAVATION IN THE RIGHT–OF–WAY.
10. A UTILITY CUT PERMIT IS REQUIRED FOR EACH OPEN CUT OF A CITY STREET. CONTACT 341–5888 FOR MORE DETAILS. IN CERTAIN CASES AN ENTIRE RESURFACING OF THE AREA BEING OPEN CUT MAY BE REQUIRED.
11. ANY BROKEN OR MISSING SIDEWALK PANELS, DRIVEWAY PANELS, AND CURBING WILL BE REPLACED.
12. CONTACT TRAFFIC ENGINEERING AT 341–7888 TO DISCUSS STREET LIGHTING OPTIONS.
13. PROJECT SHALL COMPLY WITH CFPUA CROSS CONNECTION CONTROL REQUIREMENTS. WATER METER(S) CANNOT BE RELEASED UNTIL ALL REQUIREMENTS ARE MET AND THE STATE HAS GIVEN THEIR FINAL APPROVAL. CALL 343–3910 FOR INFORMATION.
14. IF THE CONTRACTOR DESIRES CFPUA WATER FOR CONSTRUCTION HE SHALL APPLY IN ADVANCE FOR THIS SERVICE AND MUST PROVIDE A REDUCED PRESSURE ZONE (RPZ) BACKFLOW PREVENTION DEVICE ON THE DEVELOPER'S SIDE OF THE WATER METER BOX.
15. ANY IRRIGATION SYSTEM SUPPLIED BY CFPUA WATER SHALL COMPLY WITH CFPUA CROSS CONNECTION CONTROL REGULATIONS. CALL 332–6558 FOR INFORMATION.
16. ANY BACKFLOW PREVENTION DEVICES REQUIRED BY CFPUA WILL NEED TO BE ON THE LIST OF APPROVED DEVICES BY USCFCCCHR OR ASSE.
17. WHEN PVC WATER MAINS AND/OR POLYETHYLENE SERVICES ARE PROPOSED, THE PIPES ARE TO BE MARKED WITH NO. 10 INSULATED SINGLE STRAND COPPER WIRE INSTALLED THE ENTIRE LENGTH AND SECURED TO ALL VALVES. THIS WIRE IS TO BE ACCESSIBLE AT ALL FIRE HYDRANTS AND WATER METER BOXES TO AID IN FUTURE LOCATION OF FACILITIES.
18. THE NUMBER AND SPACING OF DRIVEWAYS FOR ALL INTERCONNECTED SITES WILL BE DETERMINED BY THE COMBINED FRONTAGE OF THE INTERCONNECTED PROPERTIES.
19. UNDERGROUND FIRE LINE MUST BE PERMITTED AND INSPECTED BY THE WILMINGTON FIRE DEPARTMENT FROM THE PUBLIC ROW TO THE BUILDING. CONTACT THE WILMINGTON FIRE DEPARTMENT DIVISION OF FIRE AND LIFE SAFETY AT 910–343–0696 FOR ADDITIONAL INFORMATION.
20. A LANDSCAPE PLAN INDICATING THE LOCATION OF REQUIRED STREET TREES SHALL BE SUBMITTED TO THE CITY OF WILMINGTON TRAFFIC ENGINEER DIVISION AND PARKS AND RECREATIN DEPARTMENT FOR REVIEW AND APPROVAL PRIOR TO THE RECORDING OF THE FINAL PLAT.
21. IF AND IRRIGATION SYSTEM IS PLANNED FOR THE SITE, UTILIZE MOISTURE SENSORS.
22. ALL PROPOSED VEGETATION WITHIN THE SIGHT TRIANGLES SHALL NOT INTERFERE WITH CLEAR VISUAL SIGHT LINES FROM 30"–10'.
23. PLEASE CONSIDER INCORPORATING XERIC LANDSCAPING FOR ALL NEW LANDSCAPING.

EROSION CONTROL NOTES AND MAINTENANCE PLAN:

1. ALL EROSION AND SEDIMENT CONTROL MEASURES WILL BE CHECKED FOR STABILITY AND OPERATION FOLLOWING EVERY RUNOFF–PRODUCING RAINFALL, BUT IN NO CASE, LESS THAN ONCE EVERY WEEK AND WITHIN 24 HOURS OF EVERY HALF–INCH RAINFALL.

2. ALL POINTS OF EGRESS WILL HAVE CONSTRUCTION ENTRANCES THAT WILL BE PERIODICALLY TOP–DRESSED WITH AN ADDITIONAL 2 INCHES OF #4 STONE TO MAINTAIN PROPER DEPTH. THEY WILL BE MAINTAINED IN A CONDITION TO PREVENT MUD OR SEDIMENT FROM LEAVING THE SITE. IMMEDIATELY REMOVE OBJECTIONABLE MATERIAL SPILLED WASHED OR TRACKED ONTO THE CONSTRUCTION ENTRANCE OR ROADWAYS.

3. SEDIMENT WILL BE REMOVED FROM HARDWARE CLOTH AND GRAVEL INLET PROTECTION, BLOCK AND GRAVEL INLET PROTECTION, ROCK DOUGHNUT INLET PROTECTION AND ROCK PIPE INLET PROTECTION WHEN THE DESIGNED STORAGE CAPACITY HAS BEEN HALF FILLED WITH SEDIMENT. ROCK WILL BE CLEANED OR REPLACED WHEN THE SEDIMENT POOL NO LONGER DRAINS AS DESIGNED. DEBRIS WILL BE REMOVED FROM THE ROCK AND HARDWARE CLOTH TO ALLOW PROPER DRAINAGE. SILT SACKS WILL BE EMPTIED ONCE A WEEK AND AFTER EVERY RAIN EVENT. SEDIMENT WILL BE REMOVED FROM AROUND WATTLES, BEAVER DAMS, DANDY SACKS AND SOCKS ONCE A WEEK AND AFTER EVERY RAIN EVENT.

4. SEDIMENT WILL BE REMOVED FROM BEHIND THE SEDIMENT FENCE WHEN IT BECOMES HALF FILLED. THE SEDIMENT FENCE WILL BE REPAIRED AS NECESSARY TO MAINTAIN A BARRIER. STAKES MUST BE STEEL. STAKE SPACING WILL BE 6 FEET MAX. WITH THE USE OF EXTRA STRENGTH FABRIC, WITHOUT WIRE BACKING. STAKE SPACING WILL BE 8 FEET MAX. WHEN STANDARD STRENGTH FABRIC AND WIRE BACKING ARE USED. IF ROCK FILTERS ARE DESIGNED AT LOW POINTS IN THE SEDIMENT FENCE, THE ROCK WILL BE REPAIRED OR REPLACED IF IT BECOMES HALF–FULL OF SEDIMENT, NO LONGER DRAINS AS DESIGNED OR IS DAMAGED.

5. LAND QUALITY REQUIRES:
ALL SEEDED AREAS WILL BE FERTILIZED, RESEEDED AS NECESSARY, AND MULCHED, ACCORDING TO SPECIFICATIONS IN THE VEGETATIVE PLAN, TO MAINTAIN A VIGOROUS, DENSE VEGETATIVE COVER. ALL SLOPES WILL BE STABILIZED WITHIN 21 CALENDAR DAYS. ALL OTHER AREAS WILL BE STABILIZED WITHIN 15 WORKING DAYS.
WATER QUALITY REQUIRES:
ALL SEEDED AREAS WILL BE FERTILIZED, RESEEDED AS NECESSARY AND MULCHED ACCORDING TO SPECIFICATIONS IN THE VEGETATIVE PLAN TO MAINTAIN A VIGOROUS, DENSE VEGETATIVE COVER. ALL PERIMETER DIKES, SWALES, DITCHES, PERIMETER SLOPES, ALL SLOPES STEEPER THAN 3' HORIZONTAL TO 1' VERTICAL (3:1) AND ALL HIGH QUALITY WATER (HQW) ZONES SHALL BE PROVIDED TEMPORARY OR PERMANENT STABILIZATION WITH GROUND COVER AS SOON AS PRACTICABLE BUT IN ANY EVENT WITHIN SEVEN (7) CALENDAR DAYS FROM THE LAST LAND–DISTURBING ACTIVITY. ALL OTHER DISTURBED AREAS SHALL BE PROVIDED TEMPORARY OR PERMANENT STABILIZATION WITH GROUND COVER AS SOON AS PRACTICABLE BUT IN ANY EVENT WITHIN FOURTEEN (14) CALENDAR DAYS FROM THE LAST LAND–DISTURBING ACTIVITY.

SITE WORK NOTES:

1. THE CONTRACTOR SHALL VISIT THE SITE TO BECOME FAMILIAR WITH FIELD CONSTRUCTION CONDITIONS.
2. CONTRACTOR SHALL COORDINATE WORK WITHIN NCDOT AND LOCAL RIGHT OF WAYS WITH PROPER AUTHORITIES AND SHALL MEET ANY REQUIREMENTS AS TO TRAFFIC CONTROL AND CONNECTION TO EXISTING STREETS.
3. CLEARING AND GRUBBING: REMOVE ALL TREES AS REQUIRED UNLESS OTHERWISE NOTED TO REMAIN, STUMPS, ROOTS, SHRUBBERY, ASPHALT, CONCRETE, STRUCTURES, BURIED UTILITIES, STORAGE TANKS, ETC. WITHIN LIMITS OF CONSTRUCTION.
4. STRIPPING: BEFORE EXCAVATING OR FILLING, REMOVE ALL TOPSOIL, WOOD, LEAVES, AND ANY OTHER UNSUITABLE MATERIAL.
5. MUCKING: REMOVE ANY SOFT, ORGANIC SILT MATERIALS AND EXISTING BURIED CONSTRUCTION DEBRIS AS REQUIRED AND FILL TO SUBGRADE ELEVATIONS WITH A CLEAN SELECT–FILL COMPACTED AS SPECIFIED.
6. DISPOSAL: CLEARED, GRUBBED, STRIPPED OR EXCAVATED SPOIL SHALL BE REMOVED FROM SITE AND DISPOSED OF IN ACCORDANCE WITH ALL APPLICABLE LOCAL AND STATE CODES.
7. BORROW MATERIAL: THE CONTRACTOR SHALL FURNISH BORROW MATERIAL REQUIRED FROM OFF SITE AND OBTAIN ALL REQUIRED PERMITS ASSOCIATED WITH BORROW OPERATIONS.
8. FILL AND COMPACTION: AFTER STRIPPING THOSE AREAS DESIGNATED TO RECEIVE FILL SHOULD BE PROOFROLLED. THE TOP 8" OF SUBGRADE SHALL BE COMPACTED TO AT LEAST 98% OF MAXIMUM DENSITY AT OPTIMUM MOISTURE CONTENT. ANY AREA WHICH PUMPS OR RUTS EXCESSIVELY SHOULD BE UNDERCUT AND REPLACED WITH A CLEAN, SILTY OR CLAYEY SAND HAVING A UNIFIED SOIL CLASSIFICATION OF SP, SM, OR SC. FILL MATERIAL 5" OUTSIDE OF BUILDING AREAS SHALL THEN BE PLACED IN LAYERS NOT TO EXCEED 8" AND COMPACTED TO AT LEAST 95% OF THE STANDARD PROCTOR MAXIMUM DRY DENSITY (ASTM D–698) WITH THE UPPER 12 INCHES OF SUBGRADE BEING COMPACTED TO 98% OF THE STANDARD PROCTOR MAXIMUM DRY DENSITY. FILL MATERIALS WITHIN BUILDING AREAS TO A LINE OUTSIDE THE BUILDING AREAS SHALL BE PLACED IN LAYERS NOT TO EXCEED 8" AND COMPACTED TO AT LEAST 98% OF THE STANDARD PROCTOR MAXIMUM DRY DENSITY (ASTM D–698) WITH THE UPPER 12 INCHES OF SUBGRADE BEING COMPACTED IN 6 INCH LAYERS TO 100% OF THE STANDARD PROCTOR MAXIMUM DRY DENSITY. IN AREAS WHERE NO STRUCTURAL FILL IS TO BE PLACED THE UPPER 12 INCHES OF IN–PLACE SUBGRADE SHOULD BE COMPACTED TO AT LEAST 98% OF THE STANDARD PROCTOR MAXIMUM DRY DENSITY. IF THE MATERIAL IS TOO DRY TO COMPACT TO THE REQUIRED DENSITY EACH LAYER SHALL BE WETTED IN ACCORDANCE WITH COMPACTION REQUIREMENTS. IF THE MATERIAL IS TOO WET TO SECURE PROPER COMPACTION, IT SHALL BE HARROWED REPEATEDLY OR OTHERWISE AERATED WITH SUITABLE EQUIPMENT UNTIL OPTIMUM MOISTURE CONTENT IS OBTAINED. FILL SHALL BE PLACED IN SUCH A MANNER THAT THE SURFACE WILL DRAIN READILY AT ALL TIMES. SEE STRUCTURAL NOTES AND SOILS REPORT FOR ADDITIONAL REQUIREMENTS.
9. LAYOUT: THE CONTRACTOR SHALL PROVIDE ALL LAYOUT REQUIRED TO CONSTRUCT HIS WORK.
10. THE CONTRACTOR IS RESPONSIBLE FOR THE LOCATION AND PROTECTION OF EXISTING UTILITIES DURING CONSTRUCTION.
11. EXISTING BOUNDARY AND TOPOGRAPHIC INFORMATION FROM SURVEY BY ARNOLD CARSON P.A. AND PROVIDED BY OWNER.
12. THE CONTRACTOR SHALL VERIFY DIMENSIONS AT JOBSITE.
13. THE CONTRACTOR IS RESPONSIBLE FOR THE COORDINATION OF RELOCATION OR DISCONNECTION OF ALL EXISTING UTILITIES WITH APPLICABLE AGENCIES AND AUTHORITIES.
14. ALL PAVEMENT AND BASE MATERIALS AND WORKMANSHIP SHALL CONFORM TO NCDOT STANDARDS.
15. WATER AND SEWER SERVICES SHALL BE INSTALLED TO MEET LOCAL AND STATE PLUMBING CODES. METER AND TAPS SHALL MEET ALL LOCAL REQUIREMENTS.
16. ALL AREAS SHALL BE GRADED FOR POSITIVE DRAINAGE.
17. SEE SOILS REPORT FOR ADDITIONAL REQUIREMENTS.
18. CONTRACTOR SHALL NOTE THAT EARTHWORK QUANTITIES ARE HIS RESPONSIBILITY. PLANS DO NOT REPRESENT A BALANCED EARTHWORK CONDITION.
19. REINF. CONC. PIPE SHALL BE CLASS III W/RUBBER GASKETED JOINT OR "RAM NECK". INSTALL PER MANUFACTURER'S REQUIREMENTS.
20. USE WHITE LANE MARKING PAINT FOR ALL PAVEMENT MARKINGS. PAINT SHALL BE A CHLORINATED RUBBER ALKYD, FS TT–P–115, TYPE III, FACTORY MIXED, QUICK DRYING, NON–BLEEDING. THERMOPLASTIC MARKINGS REQUIRED WITHIN CITY AND NCDOT ROW.
21. REFER TO THE PLUMBING DRAWINGS FOR LOCATION AND INVERTS OF NEW WASTE AND WATER LINES.
22. SEE PLUMBING SHEETS FOR LOCATION AND INVERTS OF CONDENSATE AND ROOF DRAINS. THE GENERAL CONTRACTOR IS RESPONSIBLE TO CONNECT THESE LINES TO THE UNDERGROUND DOWNSPOUT DRAIN AT THE REQUIRED DEPTH TO DRAIN. ALL UNDERGROUND DOWNSPOUT DRAINS SHALL HAVE A MINIMUM SLOPE OF 1% AND BE SCH 40 PVC PIPE.
23. THE FINISHED GROUND ELEVATION AT THE BUILDING PERIMETER SHALL BE A MINIMUM OF 6 INCHES BELOW THE BUILDING FINISH FLOOR ELEVATION EXCEPT AT ENTRANCES AND ENTRANCE TRANSITIONS. SEE GRADING PLAN.

For each open utility cut of City streets, a $325 permit shall be required from the City prior to occupancy and/or project acceptance.

CITY OF WILMINGTON NORTH CAROLINA
Public Services • Engineering Division
APPROVED STORMWATER MANAGEMENT PLAN
Date: ________ Permit # ________
Signed: ________

Approved Construction Plan

	Name	Date
Planning		
Traffic		
Fire		

NCDENR PWSS WATER PERMIT #: ________
WATER CAPACITY: ________ GPD
DWQ SEWER PERMIT #: ________
SEWER CAPACITY: ________ GPD
SEWER SHED # AND PLANT: ________
SEWER TO FLOW THROUGH NEI: YES or NO (CIRCLE ONE)

REV	SYMBOL	DATE	DESCRIPTION	BY
		7.13.16	DELETED BUILDING TYPE 1, REV. NUMBER OF REMAINING BUILDINGS AND LOT LAYOUT, REV. GRADES, REV. SITE DATA.	

REVISIONS

©2016 NORRIS & TUNSTALL

NOTES AND DETAILS
CAROLINA BAY AT AUTUMN HALL, PHI
OLD GARDEN ROAD MANSION FLATS REVISION
AUTUMN HALL TOWN CENTER
WILMINGTON, NORTH CAROLINA 28403

OWNER:
CAROLINA BAY OF WILMINGTON, LLC
BILL SCHOETTELKOTTE
DIRECTOR OF CONSTRUCTION
2334 S. 41ST STREET
WILMINGTON, NC 28403
910 815-3122

NORRIS & TUNSTALL
CONSULTING ENGINEERS, INC.
902 MARKET STREET PHONE (910) 343-9653
WILMINGTON, NC, 28401 FAX (910) 343-9604
licence #C-3641

16033

DES. JST
CKD. JPN
DRWN. NKS
DATE 7/13/16

NORTH CAROLINA PROFESSIONAL ENGINEER SEAL 19851 JOHN S. TUNSTALL

C6

ojects\2005\05150 Autumn Hall Muli-Use\05150 Plans\dwg\05150.master.r31.dwg, 7/13/2016 3:12:08 PM

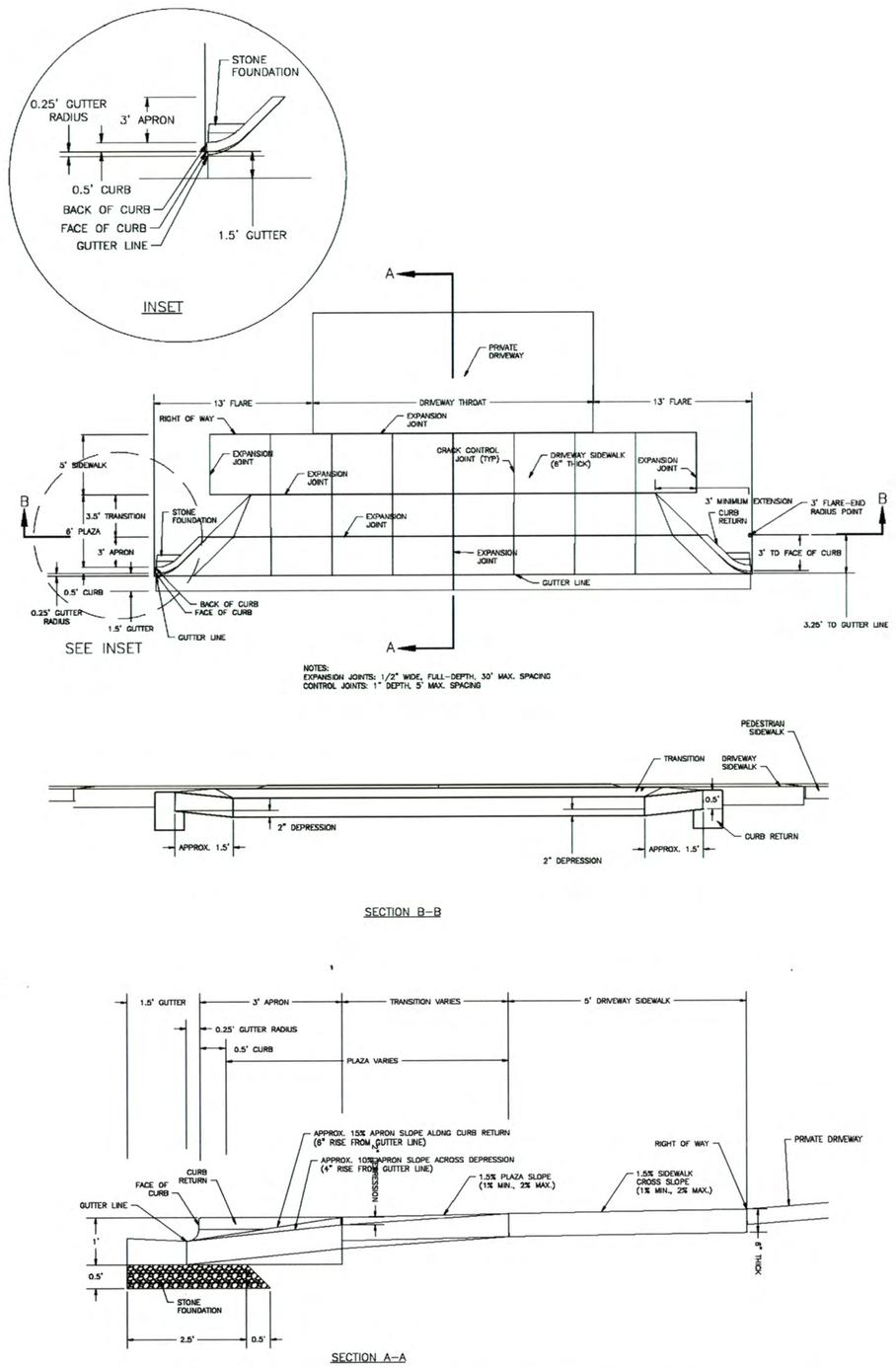

STANDARD CITY OF WILMINGTON DRIVE WAY DETAIL

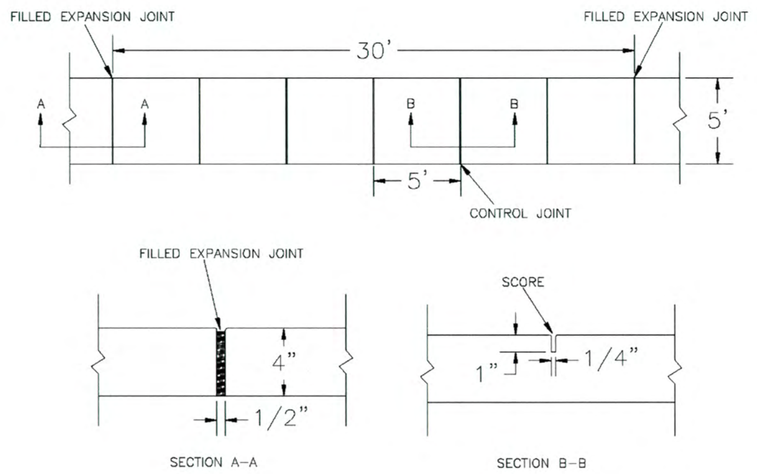

NOTES:

1. JOINT MATERIAL TO COMPLY WITH CURRENT NCDOT STANDARDS.
2. SANITARY SEWER CLEAN-OUTS, WATER METERS, MANHOLES, AND VALVE LIDS TO BE LOCATED OUTSIDE SIDEWALK WHERE FEASIBLE.
3. MINIMUM SIDEWALK WIDTH TO BE 6' MINIMUM IF PLACED AT BACK OF CURB.
4. CONCRETE FOR ALL SIDEWALKS (EXCEPT ANY PORTION CONTAIN WITHIN A DRIVEWAY APRON) SHALL BE CLASS "A" – 3,000 PSI.
5. MINIMUM REPLACEMENT FOR REPAIRS IS A 5' X 5' PANEL
6. 4" STONE BASE MAY BE REQUIRED FOR POOR SOIL CONDITIONS
7. MINIMUM DEPTH FOR TUNNELING BELOW SIDEWALK IS 12"
8. MAX ADJACENT GROUND SLOPE WITHOUT RAILING IS 2:1
9. MIN GRADE FOR PROPER DRAINAGE IS 1% IN AT LEAST 1 DIRECTION. MAX CROSS SLOPE IS 2%. MAX LONGITUDINAL SLOPE IS 8.3%, 10% IF LIMITED BY EXISTING CONDITIONS, OR NO GREATER THAN THE SLOPE OF THE EXISTING ADJACENT ROAD.

STANDARD SIDEWALK DETAIL

For each open utility cut of City streets, a $325 permit shall be required from the City prior to occupancy and/or project acceptance.

CITY OF WILMINGTON NORTH CAROLINA

Public Services • Engineering Division

APPROVED STORMWATER MANAGEMENT PLAN

Date:_____ Permit #_____

Signed: _____

Approved Construction Plan

	Name	Date
Planning		
Traffic		
Fire		

NCDENR PWSS WATER PERMIT #: _____

WATER CAPACITY: _____GPD

DWQ SEWER PERMIT #: _____

SEWER CAPACITY: _____GPD

SEWER SHED # AND PLANT: _____

SEWER TO FLOW THROUGH NEI: YES or NO (CIRCLE ONE)

REV	DATE	DESCRIPTION	BY
	7.13.16	DELETED BUILDING TYPE 1, REV. NUMBER OF REMAINING BUILDINGS AND LOT LAYOUT. REV. GRADES. REV. SITE DATA.	

SYMBOL REVISIONS

© 2016 NORRIS & TUNSTALL

NOTES AND DETAILS
CAROLINA BAY AT AUTUMN HALL, PHI
OLD GARDEN ROAD MANSION FLATS REVISION
AUTUMN HALL TOWN CENTER
WILMINGTON, NORTH CAROLINA 28403

OWNER:
CAROLINA BAY OF WILMINGTON, LLC
BILL SCHOETTELKOTTE
DIRECTOR OF CONSTRUCTION
2334 S. 41ST STREET
WILMINGTON, NC 28403
910 815-3122

NORRIS & TUNSTALL
CONSULTING ENGINEERS, INC.
902 MARKET STREET
WILMINGTON, NC, 28401
PHONE (910) 343-9653
FAX (910) 343-9604
licence #C-3641

16033

DES.	JST
CKD.	JPN
DRWN.	NKS
DATE	7/13.16

NORTH CAROLINA PROFESSIONAL SEAL 19851 ENGINEER JOHN S. TUNSTALL

C7

rojects\2005\05150 Autumn Hall Mull-Use\05150 Plans\dwg\05150_master(31.dwg, 7/13/2016 3:13:02 PM

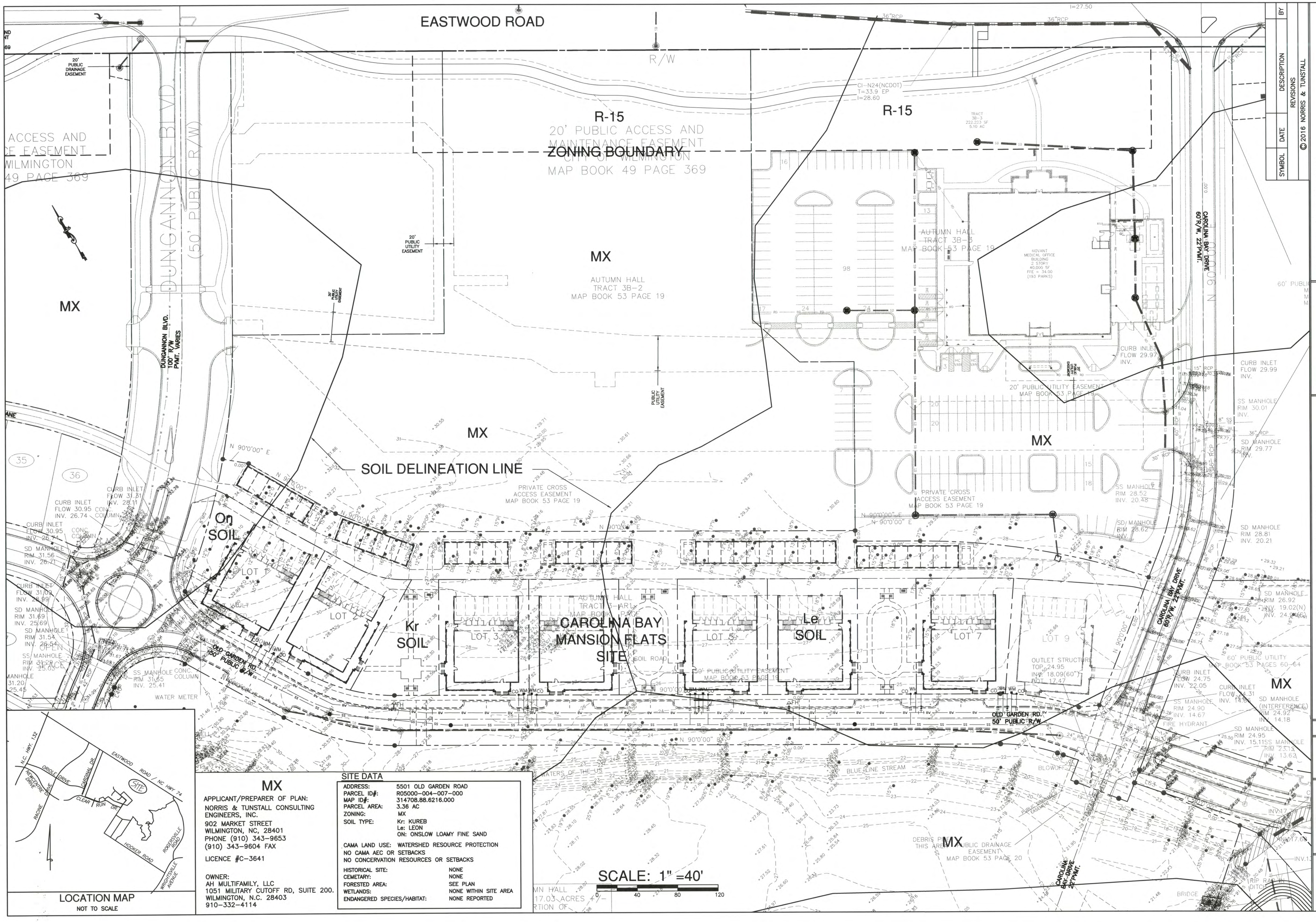

MX

APPLICANT/PREPARER OF PLAN:
NORRIS & TUNSTALL CONSULTING ENGINEERS, INC.
902 MARKET STREET
WILMINGTON, NC, 28401
PHONE (910) 343-9653
(910) 343-9604 FAX

LICENCE #C-3641

OWNER:
AH MULTIFAMILY, LLC
1051 MILITARY CUTOFF RD, SUITE 200.
WILMINGTON, N.C. 28403
910-332-4114

SITE DATA

ADDRESS:	5501 OLD GARDEN ROAD
PARCEL ID#:	R05000-004-007-000
MAP ID#:	314708.88.6216.000
PARCEL AREA:	3.36 AC
ZONING:	MX
SOIL TYPE:	Kr: KUREB Le: LEON ON: ONSLOW LOAMY FINE SAND
CAMA LAND USE:	WATERSHED RESOURCE PROTECTION
NO CAMA AEC OR SETBACKS	
NO CONCERVATION RESOURCES OR SETBACKS	
HISTORICAL SITE:	NONE
CEMETARY:	NONE
FORESTED AREA:	SEE PLAN
WETLANDS:	NONE WITHIN SITE AREA
ENDANGERED SPECIES/HABITAT:	NONE REPORTED

SYMBOL	DATE	DESCRIPTION	BY

REVISIONS

© 2016 NORRIS & TUNSTALL

SITE INVENTORY PLAN
CAROLINA BAY AT AUTUMN HALL, PHI
OLD GARDEN ROAD MANSION FLATS REVISION
AUTUMN HALL TOWN CENTER
WILMINGTON, NORTH CAROLINA 28403

OWNER:
CAROLINA BAY OF WILMINGTON, LLC
BILL SCHOETTELKOTTE
DIRECTOR OF CONSTRUCTION
2334 S. 41ST STREET
WILMINGTON, NC 28403
910 815-3122

NORRIS & TUNSTALL
CONSULTING ENGINEERS, INC.
902 MARKET STREET
WILMINGTON, NC, 28401
PHONE (910) 343-9653
FAX (910) 343-9604
licence #C-3641

16033

DES.	JST
CKD.	JPN
DRWN.	NKS
DATE	7/13/16

NORTH CAROLINA PROFESSIONAL SEAL 19851 ENGINEER JOHN S. TUNSTALL

I.1