CAROLINA BAY AT AUTUMN HALL PHASE II

MX DEVELOPMENT

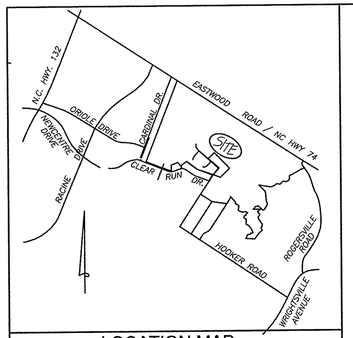

LOCATION MAP
NOT TO SCALE

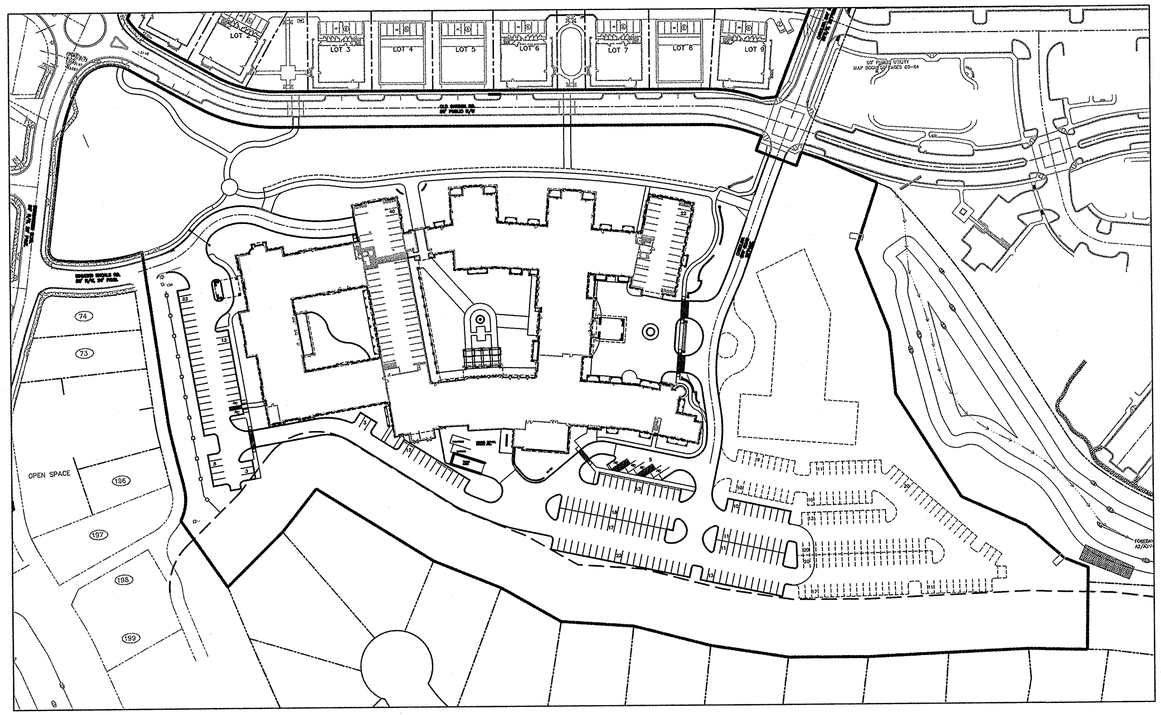

SCALE: 1" = 100'
0 100 200 300

LEGEND

- PROPERTY LINE/DISTURBED AREA LIMITS
- DISTURBED AREA LIMITS
- TSF — TEMPORARY SILT FENCE
- SD — PROPOSED STORMDRAIN PIPE
- W — PROPOSED WATERLINE
- PROPOSED SANITARY SEWER
- X 29.00 — PROPOSED FINISH GRADE SPOT ELEVATION
- FLARED END SECTION WITH RIP-RAP ENERGY DISSIPATOR
- DROP INLET WITH INLET PROTECTION (DI)
- CURB INLET WITH INLET PROTECTION (CI)
- PROPOSED FIRE HYDRANT
- 35 — EXISTING CONTOUR
- 24.12 — EXISTING SPOT ELEVATION
- 22"P — EXISTING TREE
- 22"P — EXISTING TREE TO BE REMOVED
- 22"P — EXISTING TREE TO BE SAVED AND PROTECTED
- ASPHALT
- NEW CONCRETE/SIDEWALK
- OPEN SPACE
- COMMON SPACE
- FOUNDATION PLANTING AREA

For each open utility cut of City streets, a $325 permit shall be required from the City prior to occupancy and/or project acceptance.

NCDENR PWSS WATER PERMIT #: _____
WATER CAPACITY: _____ GPD
DWQ SEWER PERMIT #: _____
SEWER CAPACITY: _____ GPD
SEWER SHED # AND PLANT: _____
SEWER TO FLOW THROUGH NEI: YES or NO (CIRCLE ONE)

CITY OF WILMINGTON NORTH CAROLINA
Public Services • Engineering Division
APPROVED STORMWATER MANAGEMENT PLAN
Date: _____ Permit # _____
Signed: _____

Approved Construction Plan

	Name	Date
Planning		
Traffic		
Fire		

CAROLINA BAY AT AUTUMN HALL PHASE II

USE:	CONTINUING CARE RETIREMENT COMMUNITY
ADDRESS:	630 CAROLINA BAY ROAD
PARCEL ID#:	R05000-004-011-000
MAP ID#:	314707.68.8597.000
SITE AREA:	17.16 ACRES (747,490 SF)
ZONING:	MX/R-15
BUILDING SETBACKS MX: (REQUIRED)	20' MIN. FROM MX BOUNDARY 50' MIN. FROM US AND NC HIGHWAYS AND MAJOR THOROUGHFARES INTERIOR: NO MINIMUM, WITHIN 10' OF INTERNAL STREET R/W PREFERED. 20' MIN. BETWEEN BUILDINGS
BUILDING SETBACKS MX: (PROPOSED)	20' MIN. FROM MX BOUNDARY SOUTH
CAMA LAND USE:	WATERSHED RESOURCE PROTECTION
DISTURBED AREA:	9.70 AC
PROPOSED BUILDING:	
BUILDING SIZE:	333,500 SF
LEVEL 1:	111,166±
LEVEL 2:	111,166±
LEVEL 3:	111,166±
BUILDING HEIGHT:	46'8" MAX.
RENTAL INDEPENDENT LIVING UNITS:	122 UNITS/69 (1) BED/53 (2) BED 175 BEDS TOTAL
ASSISTED LIVING/MEMORY SUPPORT/NURSING UNITS:	100 UNITS/70 STUDIO (1 BED)/30 1 BED 100 BEDS TOTAL
BUILDING CONSTRUCTION TYPE:	5A, 2A (ASSISTED LIVING)
BUILDING LOT COVERAGE:	44%

PARKING REQUIRED

PARKING REQUIREMENT MAXIMUM, NO MINUMUM REQUIREMENT IN MX ZONE

RESIDENTIAL: MAX. 2.5 SPACES PER UNIT, MIN. 1.5 SPACES (1 BEDROOM), 2 SPACES (2 BEDROOM)
MAX: 120 UNITS X 2.5 = 300 SPACES
MIN: NOT REQUIRED

ASSISTED LIVING: GROUP HOME RESIDENTIAL: MAX. NO REQUIREMENT, MIN. 1 SPACE PER 4 BEDS PLUS 1 SPACE PER STAFF PERSON. (STAFF=80) (NOT REQUIRED IN MX)

MAX: NO REQUIREMENT
MIN: NOT REQUIRED IN MX

TOTAL PARKING REQUIRED: MAX.=300 SPACES/NO REQUIREMENT, MIN.=NO REQUIREMENT

PARKING PROVIDED

PARKING PROVIDED (OUTDOOR): 179 SPACES, 6 ARE HC ACCESSIBLE
PARKING PROVIDED (INDOOR): 62 SPACES, 3 ARE HC ACCESSIBLE
TOTAL PARKING PROVIDED: 241
TOTAL HC ACCESSIBLE REQUIRED 7 PROVIDED: 9
BICYCLE PARKING REQUIRED AND PROVIDED: 15 SPACES

IMPERVIOUS AREA:

PROPOSED BUILDING:	133,000 SF	(ROOF AREA)
PARKING AREA ASPHALT, CURB AND GUTTER:	80,000 SF	
PARKING AREA SIDEWALK:	5,800 SF	
SERVICE AREA:	6,100 SF	
COURTYARD AREAS:	25,000 SF	
CAROLINA BAY RD.:	9,600 SF	
DIAMOND SHOALS RD.:	6,700 SF	
NEIGHBORHOOD WALKWAY, SIDEWALKS:	14,200 SF	
TOTAL:	280,400 SF	
% SITE IMPERVIOUS AREA:	37%	

LANDSCAPING: (SEE LANDSCAPE PLAN)
15 TREES PER DISTURBED ACRE: 9.85 AC DISTURBED=148 TREES

LANDSCAPING REQUIREMENTS FOR MX ZONE ARE PER O&I REGULATIONS
IMPERVIOUS SURFACE PARKING AREA=85,800
REQUIRED INTERIOR LANDSCAPING=14%
INTERIOR LANDSCAPING REQUIRED: 12,012 SF
INTERIOR LANDSCAPING PROVIDED: 12,084 SF

FOUNDATION PLANTING REQUIREMENTS: 12% FACE OF BUILDING X HEIGHT. SEE LANDSCAPE PLAN

COMMON SPACE REQUIRED (10% FOR MX)
COMMON SPACE PROVIDED ON SITE: 108,196 SF

OPEN SPACE REQUIRED (25% FOR MX)
OPEN SPACE PROVIDED ON SITE: 116,070 SF

SYMBOL	DATE	DESCRIPTION	BY
		REVISIONS	

© 2012 NORRIS & TUNSTALL

COVER SHEET
CAROLINA BAY AT AUTUMN HALL PHASE II
630 CAROLINA BAY RD.
AUTUMN HALL TOWN CENTER
WILMINGTON, NORTH CAROLINA 28403

OWNER:
CAROLINA BAY OF WILMINGTON, LLC
BILL SCHOETTELKOTTE
DIRECTOR OF CONSTRUCTION
2234 S. 41ST STREET
WILMINGTON, NC 28403
910 815-3122

NORRIS & TUNSTALL
CONSULTING ENGINEERS, INC.
1127 FLORAL PARKWAY
SUITE 400
WILMINGTON, NC, 28403
PHONE (910) 343-9653
FAX (910) 343-9604
office@nteng.com
licence #C-0641

DESIGN DEVELOPMENT

12028

DES.	JST
CKD.	JPN
DRWN.	NKS
DATE	7/19/13

NORTH CAROLINA PROFESSIONAL ENGINEER SEAL 19851 JOHN S. TUNSTALL

C0

T:\Projects\2005\05150 Autumn Hall Multi-Use\05150 Plans\dwg\05150.master-22.dwg, 7/16/2013 9:51:30 AM

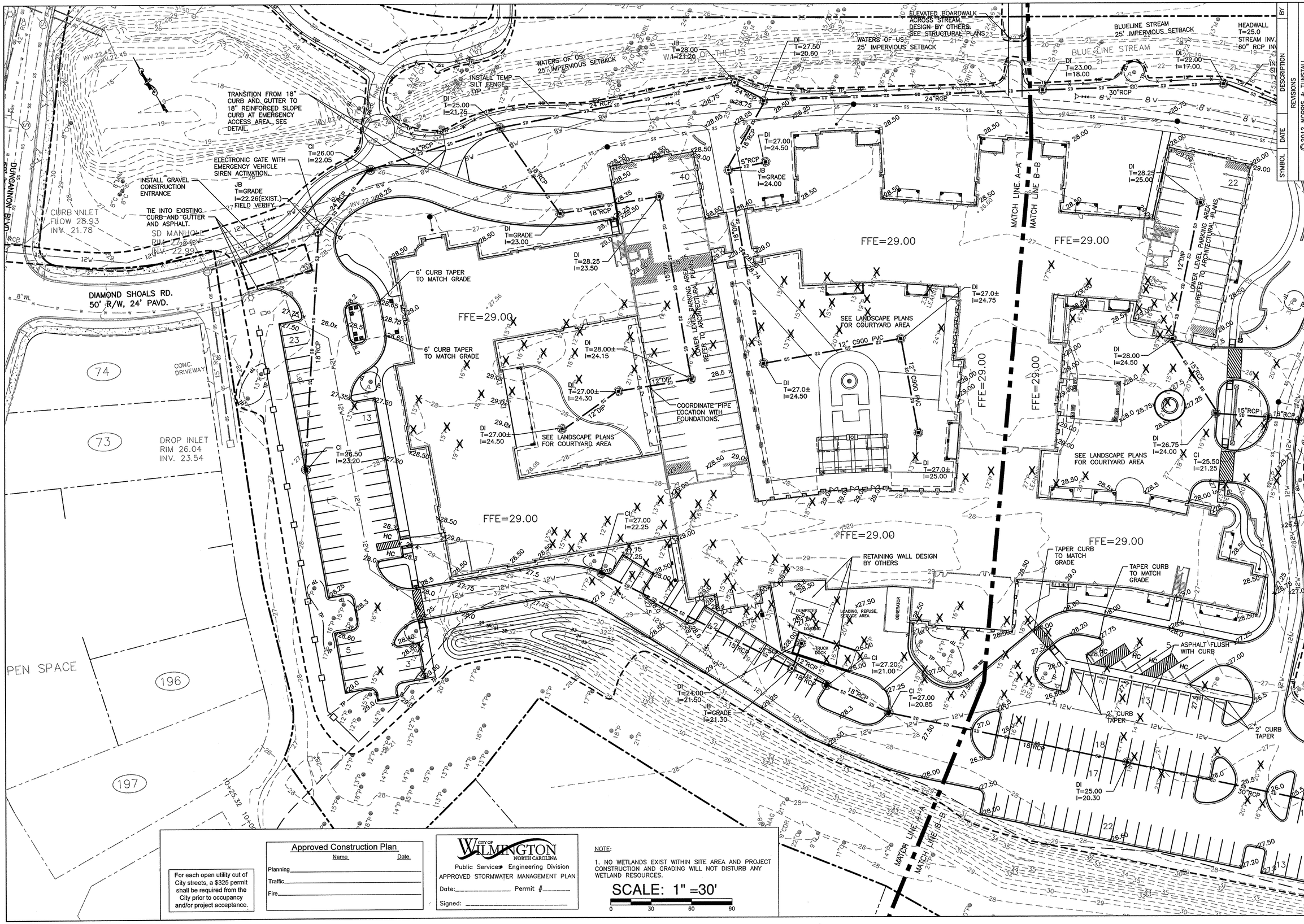

For each open utility cut of City streets, a $325 permit shall be required from the City prior to occupancy and/or project acceptance.	Approved Construction Plan Name Date Planning_____ Traffic_____ Fire_____	CITY OF WILMINGTON NORTH CAROLINA Public Services Engineering Division APPROVED STORMWATER MANAGEMENT PLAN Date:_____ Permit #_____ Signed: _____

NOTE:

1. NO WETLANDS EXIST WITHIN SITE AREA AND PROJECT CONSTRUCTION AND GRADING WILL NOT DISTURB ANY WETLAND RESOURCES.

SCALE: 1" =30'

0 30 60 90

SYMBOL	DATE	REVISIONS DESCRIPTION	BY

©2012 NORRIS & TUNSTALL

GRADING, DRAINAGE AND EROSION CONTROL PLAN
CAROLINA BAY AT AUTUMN HALL PHASE II
630 CAROLINA BAY RD.
AUTUMN HALL TOWN CENTER
WILMINGTON, NORTH CAROLINA 28403

OWNER:
CAROLINA BAY OF WILMINGTON, LLC
BILL SCHOETTELKOTTE
DIRECTOR OF CONSTRUCTION
2334 S. 41ST STREET
WILMINGTON, NC 28403
910 815-3122

NORRIS & TUNSTALL
CONSULTING ENGINEERS, INC.
1127 FLORAL PARKWAY
SUITE 400
WILMINGTON, NC, 28403
PHONE (910) 343-9653
FAX (910) 343-9604
office@nrtengr.com
licence #C-3641

DESIGN DEVELOPMENT

12028

DES.	JST
CKD.	JPN
DRWN.	NKS
DATE	7/19/13

NORTH CAROLINA PROFESSIONAL ENGINEER SEAL 19651 JOHN S. TUNSTALL

C1.1

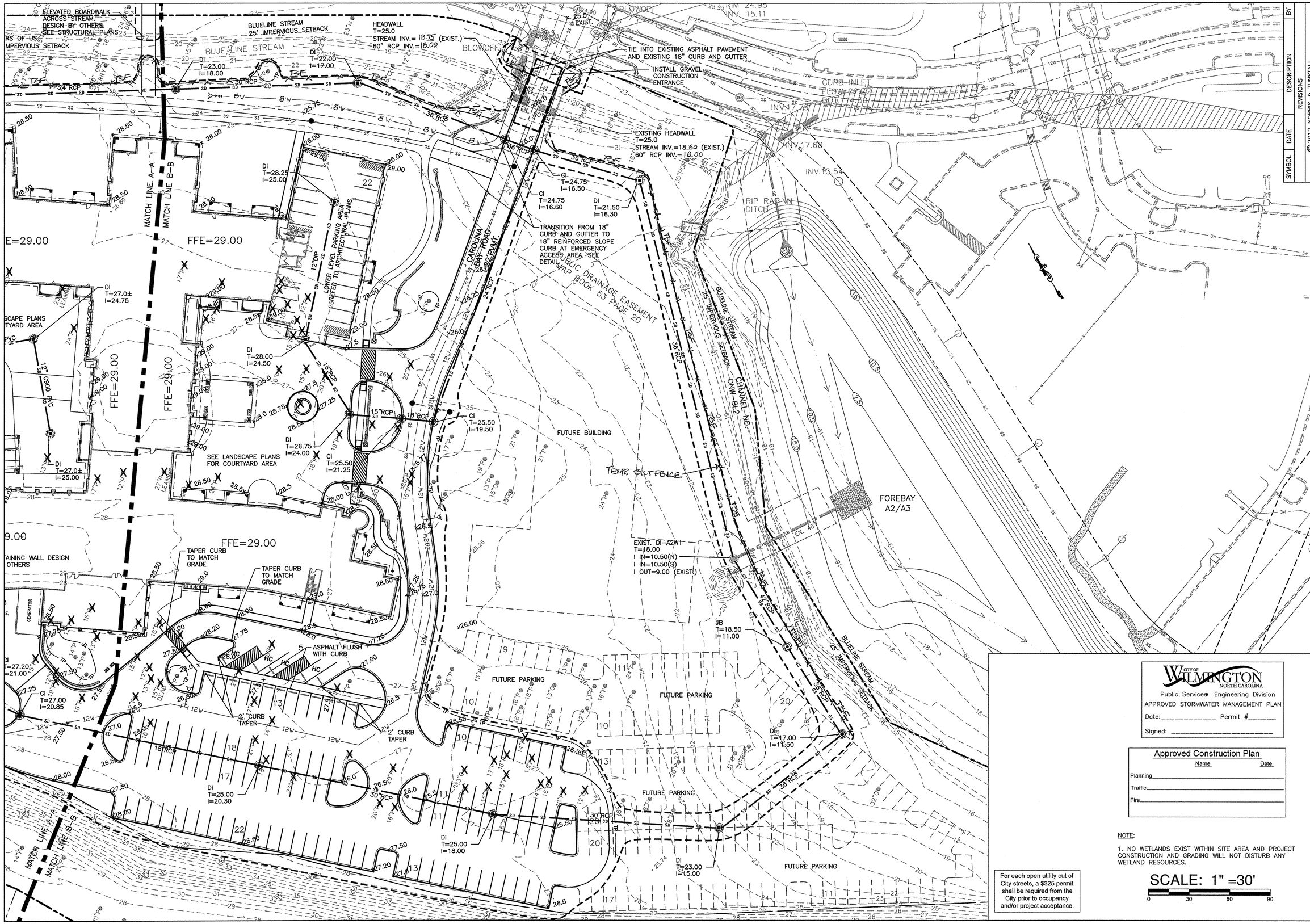

For each open utility cut of City streets, a $325 permit shall be required from the City prior to occupancy and/or project acceptance.

CITY OF WILMINGTON NORTH CAROLINA
Public Services Engineering Division
APPROVED STORMWATER MANAGEMENT PLAN
Date:_____ Permit #_____
Signed: _____

Approved Construction Plan

	Name	Date
Planning		
Traffic		
Fire		

NOTE:

1. NO WETLANDS EXIST WITHIN SITE AREA AND PROJECT CONSTRUCTION AND GRADING WILL NOT DISTURB ANY WETLAND RESOURCES.

SCALE: 1" =30'

0 30 60 90

SYMBOL	DATE	DESCRIPTION	BY
		REVISIONS	

©2012 NORRIS & TUNSTALL

GRADING, DRAINAGE AND EROSION CONTROL PLAN
CAROLINA BAY AT AUTUMN HALL PHASE II
630 CAROLINA BAY RD.
AUTUMN HALL TOWN CENTER
WILMINGTON, NORTH CAROLINA 28403

OWNER:
CAROLINA BAY OF WILMINGTON, LLC
BILL SCHOETTELKOTTE
DIRECTOR OF CONSTRUCTION
2334 S. 41ST STREET
WILMINGTON, NC 28403
910 815-3122

NORRIS & TUNSTALL
CONSULTING ENGINEERS, INC.
1127 FLORAL PARKWAY
SUITE 400
WILMINGTON, NC, 28403
PHONE (910) 343-9653
FAX (910) 343-9604
office@nteng.com
licence #C-3641

DESIGN DEVELOPMENT

12028

DES.	JST
CKD.	JPN
DRWN.	NKS
DATE	7/19/13

NORTH CAROLINA PROFESSIONAL SEAL 19851 ENGINEER JOHN P. TUNSTALL

C1.2

I:\Projects\2005\05150 Autumn Hall Mult-Use\05150 Plans\dwg\05150.master.r22.dwg, 7/17/2013 7:47:51 AM

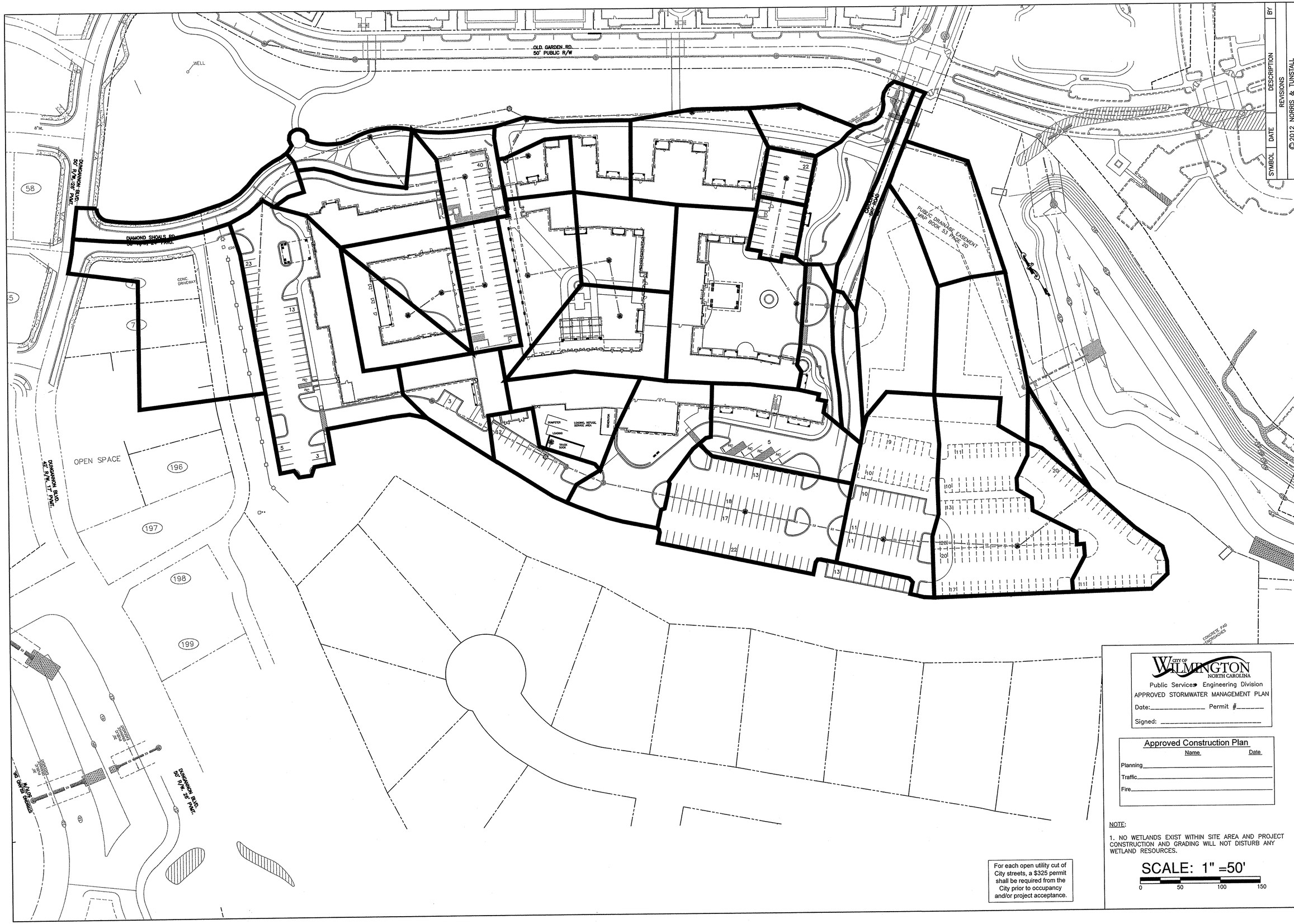

For each open utility cut of City streets, a $325 permit shall be required from the City prior to occupancy and/or project acceptance.

CITY OF WILMINGTON NORTH CAROLINA
Public Services Engineering Division
APPROVED STORMWATER MANAGEMENT PLAN
Date:_____ Permit #_____
Signed: _____

Approved Construction Plan

	Name	Date
Planning		
Traffic		
Fire		

NOTE:

1. NO WETLANDS EXIST WITHIN SITE AREA AND PROJECT CONSTRUCTION AND GRADING WILL NOT DISTURB ANY WETLAND RESOURCES.

SCALE: 1" =50'

0 50 100 150

SYMBOL	DATE	DESCRIPTION	BY

REVISIONS

© 2012 NORRIS & TUNSTALL

DRAINAGE AREA PLAN
CAROLINA BAY AT AUTUMN HALL PHASE II
630 CAROLINA BAY RD.
AUTUMN HALL TOWN CENTER
WILMINGTON, NORTH CAROLINA 28403

OWNER:
CAROLINA BAY OF WILMINGTON, LLC
BILL SCHOETTELKOTTE
DIRECTOR OF CONSTRUCTION
2334 S. 41ST STREET
WILMINGTON, NC 28403
910 815-3122

NORRIS & TUNSTALL
CONSULTING ENGINEERS, INC.
1127 FLORAL PARKWAY
SUITE 400
WILMINGTON, NC, 28403
PHONE (910) 343-9653
FAX (910) 343-9604
office@nkteng.com
licence #C-3641

DESIGN DEVELOPMENT

12028

DES.	JST
CKD.	JPN
DRWN.	NKS
DATE	7/19/13

NORTH CAROLINA PROFESSIONAL SEAL 19851 ENGINEER JOHN S. TUNSTALL

C1.3

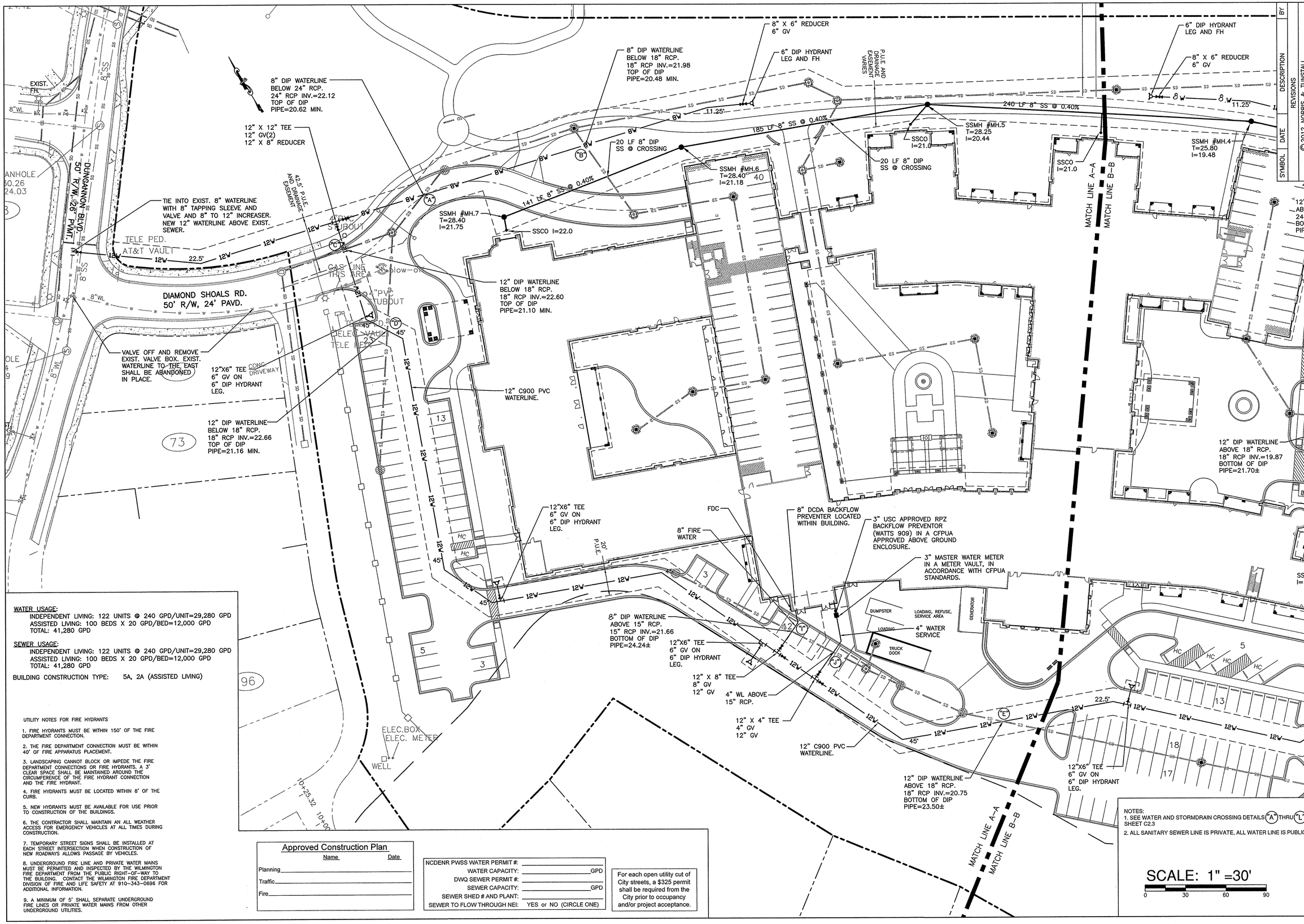

WATER USAGE:
INDEPENDENT LIVING: 122 UNITS @ 240 GPD/UNIT=29,280 GPD
ASSISTED LIVING: 100 BEDS X 20 GPD/BED=12,000 GPD
TOTAL: 41,280 GPD

SEWER USAGE:
INDEPENDENT LIVING: 122 UNITS @ 240 GPD/UNIT=29,280 GPD
ASSISTED LIVING: 100 BEDS X 20 GPD/BED=12,000 GPD
TOTAL: 41,280 GPD

BUILDING CONSTRUCTION TYPE: 5A, 2A (ASSISTED LIVING)

UTILITY NOTES FOR FIRE HYDRANTS

1. FIRE HYDRANTS MUST BE WITHIN 150' OF THE FIRE DEPARTMENT CONNECTION.

2. THE FIRE DEPARTMENT CONNECTION MUST BE WITHIN 40' OF FIRE APPARATUS PLACEMENT.

3. LANDSCAPING CANNOT BLOCK OR IMPEDE THE FIRE DEPARTMENT CONNECTIONS OR FIRE HYDRANTS. A 3' CLEAR SPACE SHALL BE MAINTAINED AROUND THE CIRCUMFERENCE OF THE FIRE HYDRANT CONNECTION AND THE FIRE HYDRANT.

4. FIRE HYDRANTS MUST BE LOCATED WITHIN 8' OF THE CURB.

5. NEW HYDRANTS MUST BE AVAILABLE FOR USE PRIOR TO CONSTRUCTION OF THE BUILDINGS.

6. THE CONTRACTOR SHALL MAINTAIN AN ALL WEATHER ACCESS FOR EMERGENCY VEHICLES AT ALL TIMES DURING CONSTRUCTION.

7. TEMPORARY STREET SIGNS SHALL BE INSTALLED AT EACH STREET INTERSECTION WHEN CONSTRUCTION OF NEW ROADWAYS ALLOWS PASSAGE BY VEHICLES.

8. UNDERGROUND FIRE LINE AND PRIVATE WATER MAINS MUST BE PERMITTED AND INSPECTED BY THE WILMINGTON FIRE DEPARTMENT FROM THE PUBLIC RIGHT-OF-WAY TO THE BUILDING. CONTACT THE WILMINGTON FIRE DEPARTMENT DIVISION OF FIRE AND LIFE SAFETY AT 910-343-0696 FOR ADDITIONAL INFORMATION.

9. A MINIMUM OF 5' SHALL SEPARATE UNDERGROUND FIRE LINES OR PRIVATE WATER MAINS FROM OTHER UNDERGROUND UTILITIES.

Approved Construction Plan

	Name	Date
Planning		
Traffic		
Fire		

NCDENR PWSS WATER PERMIT #: _____
WATER CAPACITY: _____ GPD
DWQ SEWER PERMIT #: _____
SEWER CAPACITY: _____ GPD
SEWER SHED # AND PLANT: _____
SEWER TO FLOW THROUGH NEI: YES or NO (CIRCLE ONE)

For each open utility cut of City streets, a $325 permit shall be required from the City prior to occupancy and/or project acceptance.

NOTES:
1. SEE WATER AND STORMDRAIN CROSSING DETAILS "A" THRU "L" SHEET C2.3
2. ALL SANITARY SEWER LINE IS PRIVATE, ALL WATER LINE IS PUBLIC

SCALE: 1" =30'
0 30 60 90

SYMBOL	DATE	DESCRIPTION	BY

REVISIONS

©2012 NORRIS & TUNSTALL

UTILITY PLAN
CAROLINA BAY AT AUTUMN HALL PHASE II
630 CAROLINA BAY RD.
AUTUMN HALL TOWN CENTER
WILMINGTON, NORTH CAROLINA 28403

OWNER:
CAROLINA BAY OF WILMINGTON, LLC
BILL SCHOETTELKOTTE
DIRECTOR OF CONSTRUCTION
2334 S. 41ST STREET
WILMINGTON, NC 28403
910 815-3122

NORRIS & TUNSTALL
CONSULTING ENGINEERS, INC.
1127 FLORAL PARKWAY
SUITE 400
WILMINGTON, NC, 28403
PHONE (910) 343-9653
FAX (910) 343-9604
office@nteng.com
licence #C-3641

DESIGN DEVELOPMENT

12028

DES.	JST
CKD.	JPN
DRWN.	NKS
DATE	7/19/13

NORTH CAROLINA PROFESSIONAL SEAL 19651 ENGINEER JOHN S. TUNSTALL

C2.1

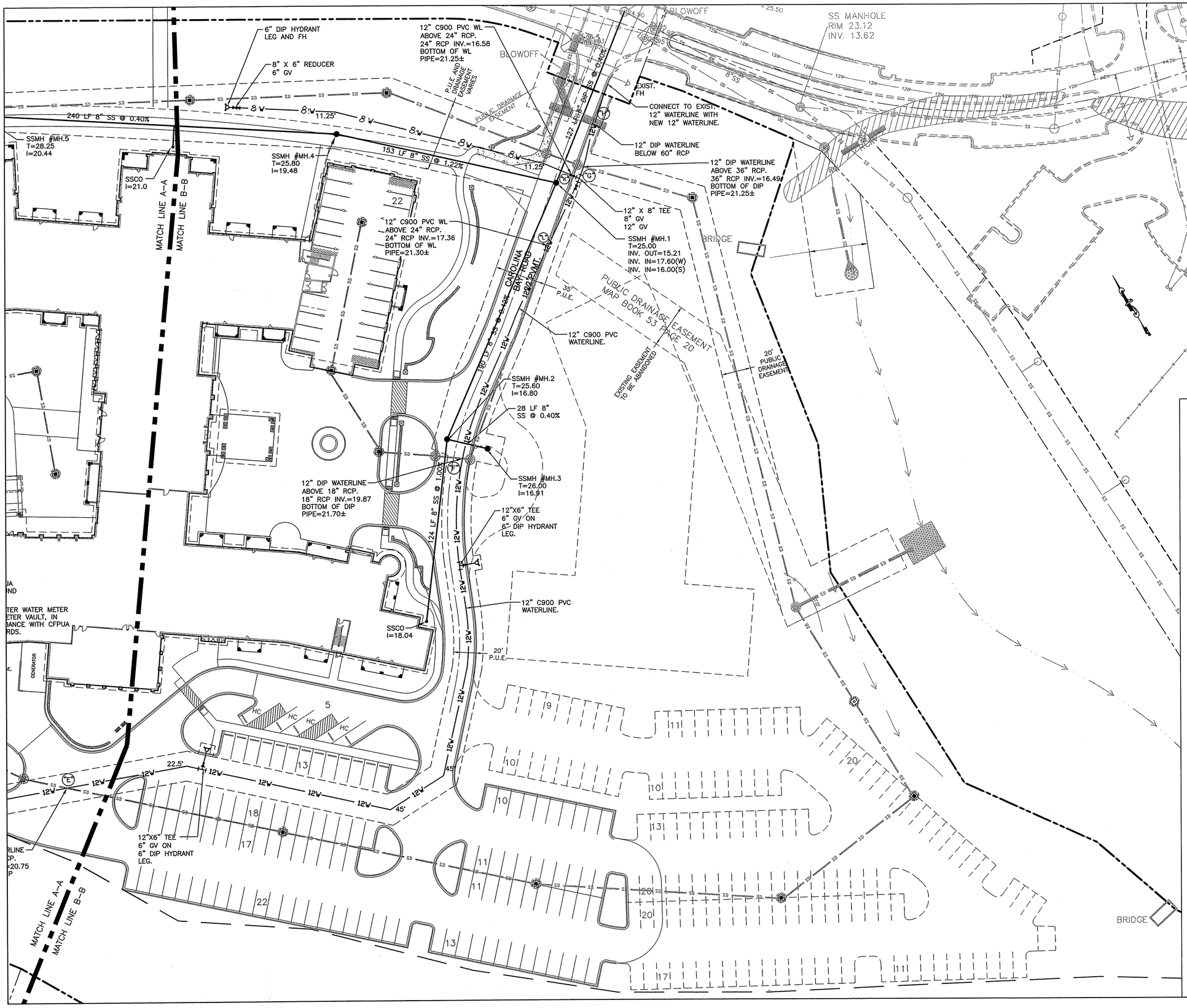

For each open utility cut of City streets, a $325 permit shall be required from the City prior to occupancy and/or project acceptance.

Approved Construction Plan

	Name	Date
Planning		
Traffic		
Fire		

NCDENR PWSS WATER PERMIT #:	
WATER CAPACITY:	GPD
DWQ SEWER PERMIT #:	
SEWER CAPACITY:	GPD
SEWER SHED # AND PLANT:	
SEWER TO FLOW THROUGH NEI:	YES or NO (CIRCLE ONE)

NOTES:
1. SEE WATER AND STORMDRAIN CROSSING DETAILS "A" THRU "L" SHEET C2.3
2. ALL SANITARY SEWER LINE IS PRIVATE, ALL WATER LINE IS PUBLIC

UTILITY NOTES FOR FIRE HYDRANTS

1. FIRE HYDRANTS MUST BE WITHIN 150' OF THE FIRE DEPARTMENT CONNECTION.

2. THE FIRE DEPARTMENT CONNECTION MUST BE WITHIN 40' OF FIRE APPARATUS PLACEMENT.

3. LANDSCAPING CANNOT BLOCK OR IMPEDE THE FIRE DEPARTMENT CONNECTIONS OR FIRE HYDRANTS. A 3' CLEAR SPACE SHALL BE MAINTAINED AROUND THE CIRCUMFERENCE OF THE FIRE HYDRANT CONNECTION AND THE FIRE HYDRANT.

4. FIRE HYDRANTS MUST BE LOCATED WITHIN 8' OF THE CURB.

5. NEW HYDRANTS MUST BE AVAILABLE FOR USE PRIOR TO CONSTRUCTION OF THE BUILDINGS.

6. THE CONTRACTOR SHALL MAINTAIN AN ALL WEATHER ACCESS FOR EMERGENCY VEHICLES AT ALL TIMES DURING CONSTRUCTION.

7. TEMPORARY STREET SIGNS SHALL BE INSTALLED AT EACH STREET INTERSECTION WHEN CONSTRUCTION OF NEW ROADWAYS ALLOWS PASSAGE BY VEHICLES.

8. UNDERGROUND FIRE LINE AND PRIVATE WATER MAINS MUST BE PERMITTED AND INSPECTED BY THE WILMINGTON FIRE DEPARTMENT FROM THE PUBLIC RIGHT-OF-WAY TO THE BUILDING. CONTACT THE WILMINGTON FIRE DEPARTMENT DIVISION OF FIRE AND LIFE SAFETY AT 910-343-0696 FOR ADDITIONAL INFORMATION.

9. A MINIMUM OF 5' SHALL SEPARATE UNDERGROUND FIRE LINES OR PRIVATE WATER MAINS FROM OTHER UNDERGROUND UTILITIES.

SCALE: 1" =30'

0 30 60 90

SYMBOL	DATE	DESCRIPTION	BY
		REVISIONS	

©2012 NORRIS & TUNSTALL

UTILITY PLAN
CAROLINA BAY AT AUTUMN HALL PHASE II
630 CAROLINA BAY RD.
AUTUMN HALL TOWN CENTER
WILMINGTON, NORTH CAROLINA 28403

OWNER:
CAROLINA BAY OF WILMINGTON, LLC
BILL SCHOETTELKOTTE
DIRECTOR OF CONSTRUCTION
2334 S. 41ST STREET
WILMINGTON, NC 28403
910 815-3122

NORRIS & TUNSTALL
CONSULTING ENGINEERS, INC.
1127 FLORAL PARKWAY
SUITE 400
WILMINGTON, NC. 28403
PHONE (910) 343-9653
FAX (910) 343-9604
office@nte.com
licence #C-3641

DESIGN DEVELOPMENT

12028

DES.	JST
CKD.	JPN
DRWN.	NKS
DATE	7/19/13

NORTH CAROLINA PROFESSIONAL ENGINEER SEAL 19851 JOHN P. TUNSTALL

C2.2

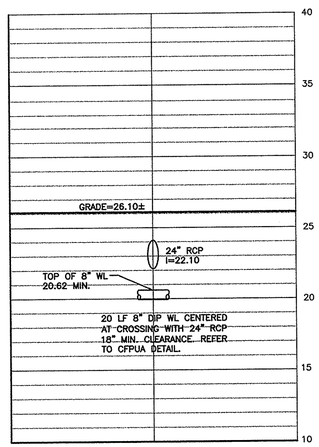

WATER/STORM DRAIN CROSSING "A"

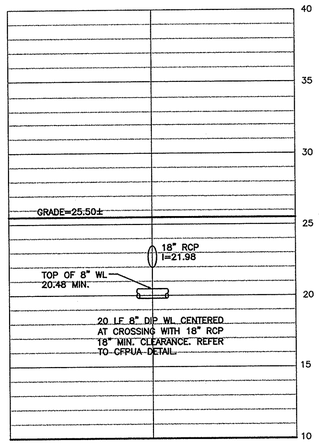

WATER/STORM DRAIN CROSSING "B"

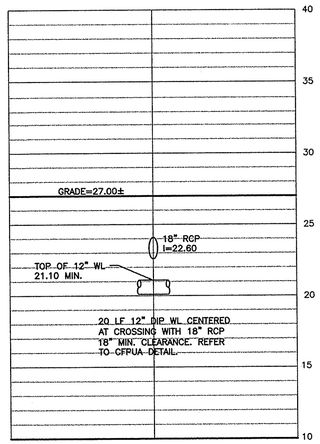

WATER/STORM DRAIN CROSSING "C"

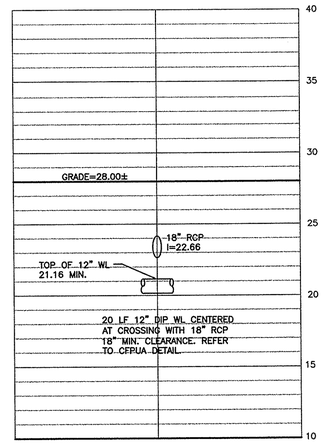

WATER/STORM DRAIN CROSSING "D"

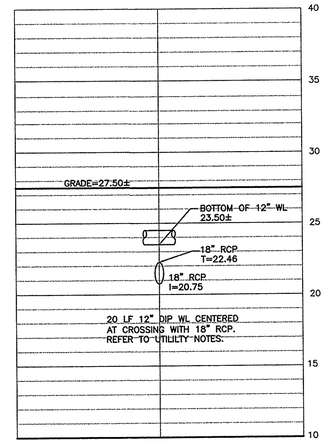

WATER/STORM DRAIN CROSSING "E"

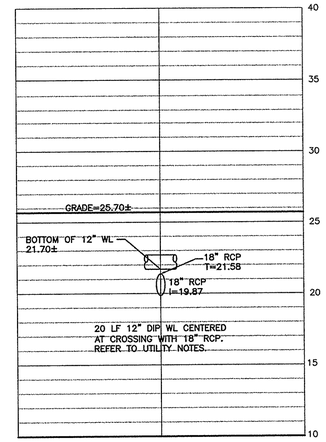

WATER/STORM DRAIN CROSSING "F"

WATERLINE/STORMDRAIN CROSSINGS

HORIZ. 1" = 50'
VERT. 1" = 5'

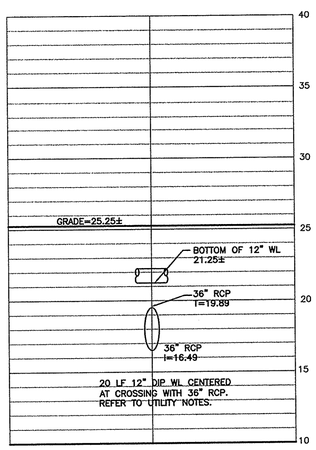

WATER/STORM DRAIN CROSSING "G"

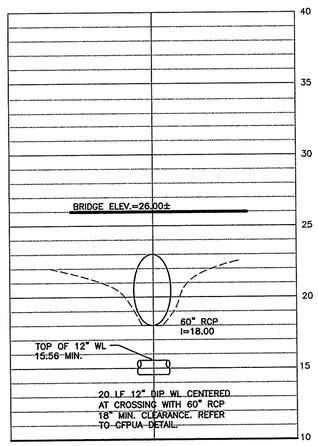

WATER/STORM DRAIN CROSSING "H"

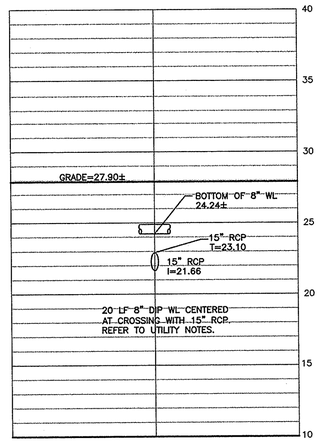

WATER/STORM DRAIN CROSSING "I"

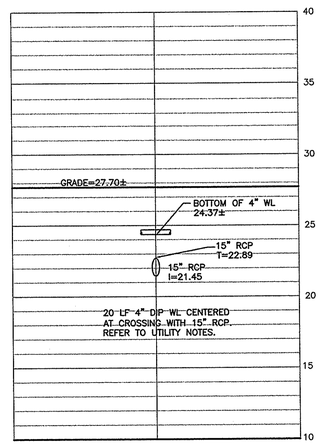

WATER/STORM DRAIN CROSSING "J"

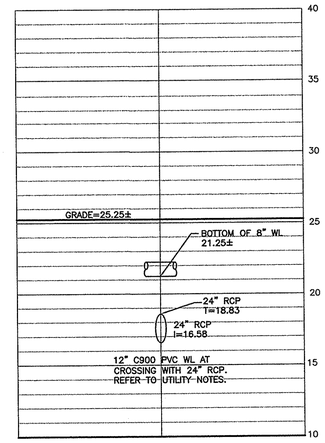

WATER/STORM DRAIN CROSSING "K"

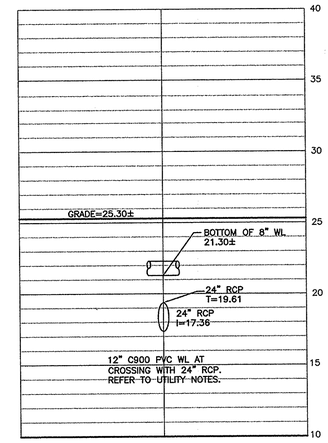

WATER/STORM DRAIN CROSSING "L"

WATERLINE/STORMDRAIN CROSSINGS

HORIZ. 1" = 50'
VERT. 1" = 5'

For each open utility cut of City streets, a $325 permit shall be required from the City prior to occupancy and/or project acceptance.

NCDENR PWSS WATER PERMIT #: _____
WATER CAPACITY: _____ GPD
DWQ SEWER PERMIT #: _____
SEWER CAPACITY: _____ GPD
SEWER SHED # AND PLANT: _____
SEWER TO FLOW THROUGH NEI: YES or NO (CIRCLE ONE)

Approved Construction Plan

	Name	Date
Planning		
Traffic		
Fire		

SCALE: 1" =30'

0 30 60 90

SYMBOL	DATE	DESCRIPTION	BY

REVISIONS

© 2012 NORRIS & TUNSTALL

UTILITY PLAN
CAROLINA BAY AT AUTUMN HALL PHASE II
630 CAROLINA BAY RD.
AUTUMN HALL TOWN CENTER
WILMINGTON, NORTH CAROLINA 28403

OWNER:
CAROLINA BAY OF WILMINGTON, LLC
BILL SCHOETTELKOTTE
DIRECTOR OF CONSTRUCTION
2304 S. 41ST STREET
WILMINGTON, NC 28403
910 815-3122

NORRIS & TUNSTALL
CONSULTING ENGINEERS, INC.
1127 FLORAL PARKWAY
SUITE 400
WILMINGTON, NC, 28403
PHONE (910) 343-9653
FAX (910) 343-9604
office@nteng.com
licence #C-3641

DESIGN DEVELOPMENT

12028

DES.	JST
CKD.	JPN
DRWN.	NKS
DATE	7/19/13

NORTH CAROLINA PROFESSIONAL SEAL 19851 ENGINEER JOHN S. TUNSTALL

C2.3

F:\Projects\2005\05150 Autumn Hall Mull-Use\05150 Plans\dwg\05150.master.r22.dwg, 7/17/2013 7:52:16 AM

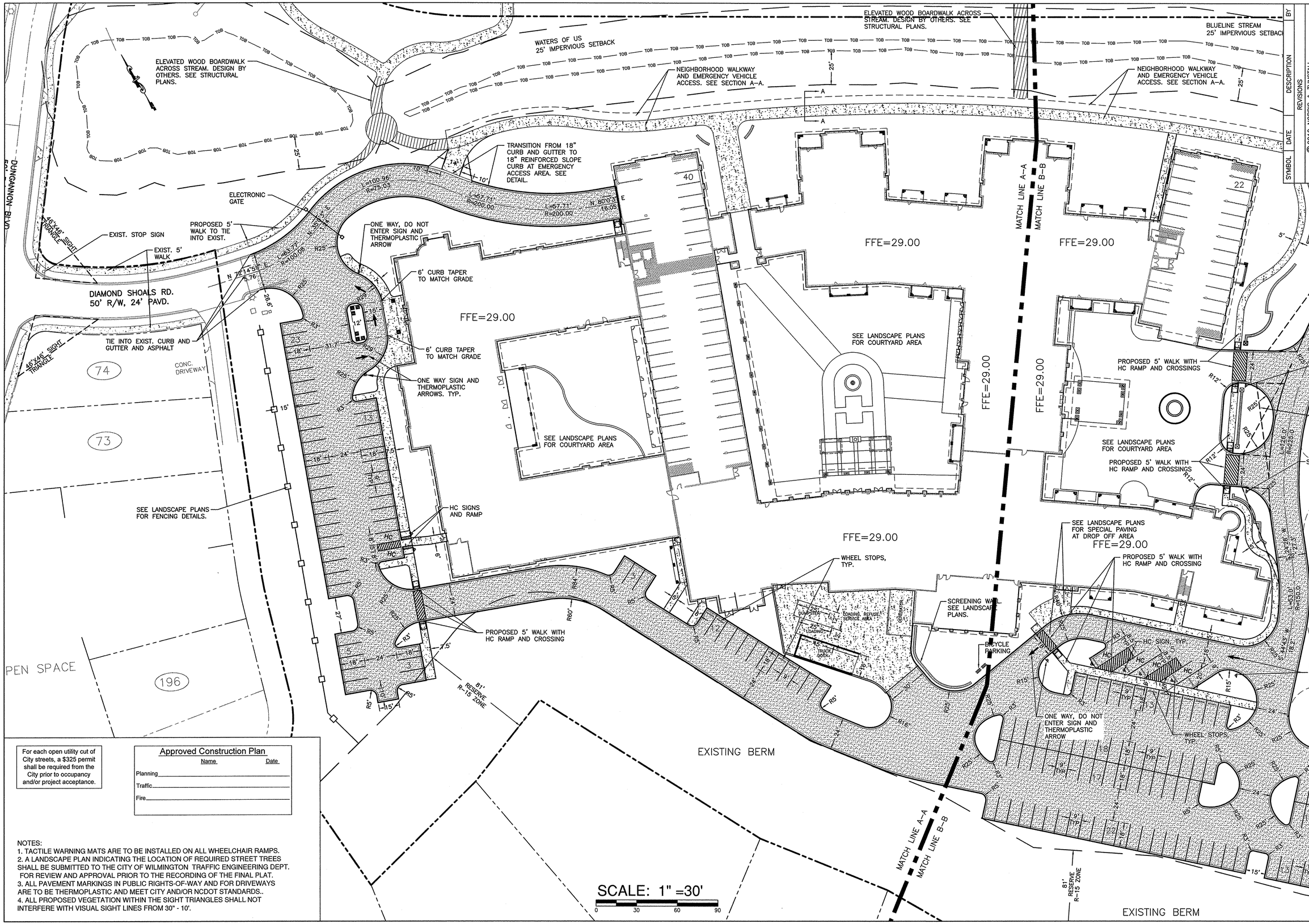

For each open utility cut of City streets, a $325 permit shall be required from the City prior to occupancy and/or project acceptance.

Approved Construction Plan

	Name	Date
Planning		
Traffic		
Fire		

NOTES:
1. TACTILE WARNING MATS ARE TO BE INSTALLED ON ALL WHEELCHAIR RAMPS.
2. A LANDSCAPE PLAN INDICATING THE LOCATION OF REQUIRED STREET TREES SHALL BE SUBMITTED TO THE CITY OF WILMINGTON TRAFFIC ENGINEERING DEPT. FOR REVIEW AND APPROVAL PRIOR TO THE RECORDING OF THE FINAL PLAT.
3. ALL PAVEMENT MARKINGS IN PUBLIC RIGHTS-OF-WAY AND FOR DRIVEWAYS ARE TO BE THERMOPLASTIC AND MEET CITY AND/OR NCDOT STANDARDS..
4. ALL PROPOSED VEGETATION WITHIN THE SIGHT TRIANGLES SHALL NOT INTERFERE WITH VISUAL SIGHT LINES FROM 30" - 10'.

SYMBOL	DATE	DESCRIPTION	BY
		REVISIONS	

© 2012 NORRIS & TUNSTALL

LAYOUT PLAN
CAROLINA BAY AT AUTUMN HALL PHASE II
630 CAROLINA BAY RD.
AUTUMN HALL TOWN CENTER
WILMINGTON, NORTH CAROLINA 28403

OWNER:
CAROLINA BAY OF WILMINGTON, LLC
BILL SCHOETTELKOTTE
DIRECTOR OF CONSTRUCTION
2334 S. 41ST STREET
WILMINGTON, NC 28403
910 815-3122

NORRIS & TUNSTALL
CONSULTING ENGINEERS, INC.
1127 FLORAL PARKWAY
SUITE 400
WILMINGTON, NC, 28403
PHONE (910) 343-9653
FAX (910) 343-9604
office@nt-eng.com
licence #C-3641

DESIGN DEVELOPMENT

12028

DES.	JST
CKD.	JPN
DRWN.	NKS
DATE	7/16/13

NORTH CAROLINA PROFESSIONAL SEAL 19851 ENGINEER JOHN P. TUNSTALL

C3.1

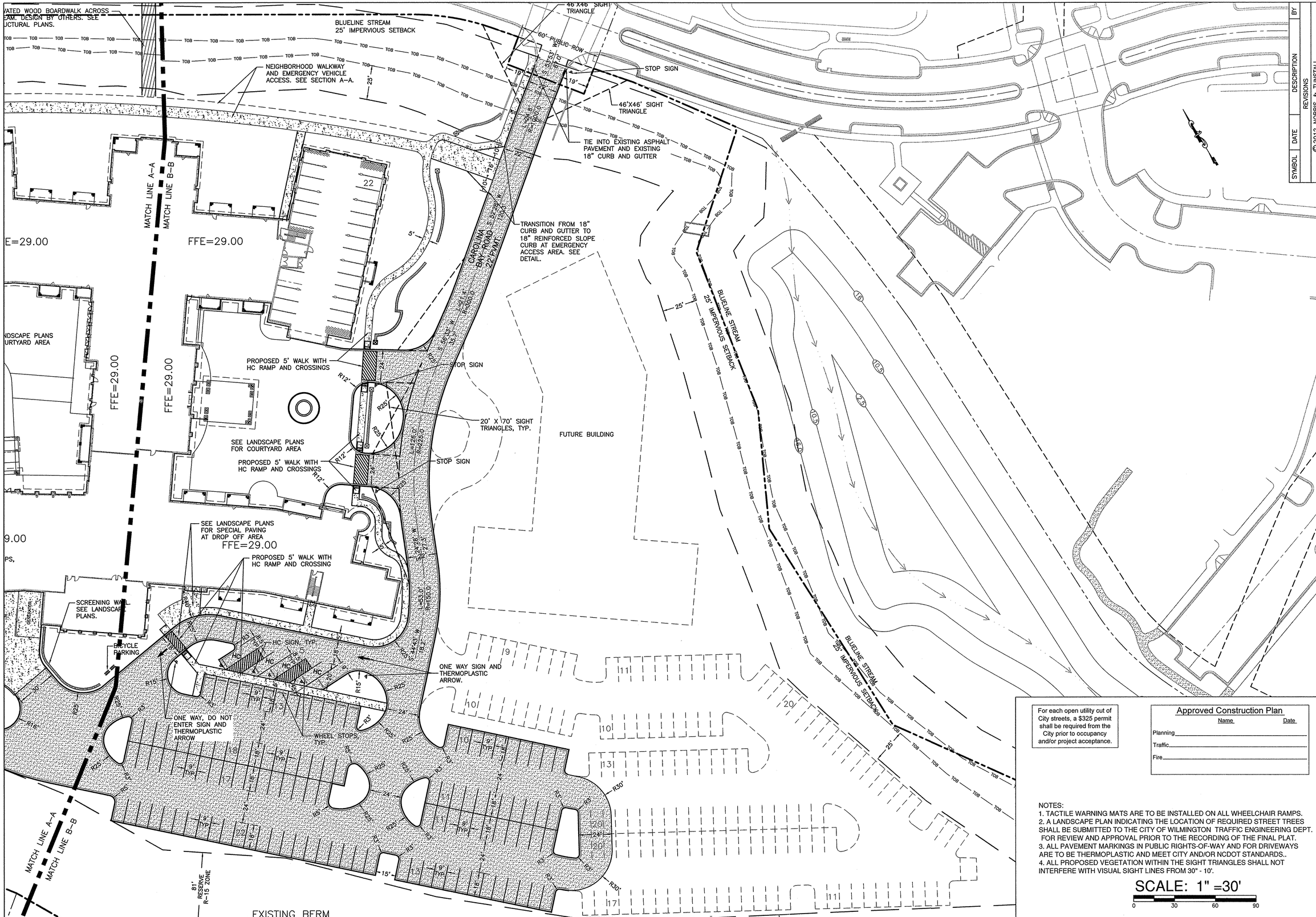

SYMBOL	DATE	DESCRIPTION	BY
		REVISIONS	

©2012 NORRIS & TUNSTALL

LAYOUT PLAN
CAROLINA BAY AT AUTUMN HALL PHASE II
630 CAROLINA BAY RD.
AUTUMN HALL TOWN CENTER
WILMINGTON, NORTH CAROLINA 28403

OWNER:
CAROLINA BAY OF WILMINGTON, LLC
BILL SCHOETTELKOTTE
DIRECTOR OF CONSTRUCTION
2334 S. 41ST STREET
WILMINGTON, NC 28403
910 815-3122

NORRIS & TUNSTALL
CONSULTING ENGINEERS, INC.
1127 FLORAL PARKWAY
SUITE 400
WILMINGTON, NC, 28403
PHONE (910) 343-9653
FAX (910) 343-9604
office@nt-eng.com
licence #C-3641

For each open utility cut of City streets, a $325 permit shall be required from the City prior to occupancy and/or project acceptance.

Approved Construction Plan

	Name	Date
Planning		
Traffic		
Fire		

NOTES:
1. TACTILE WARNING MATS ARE TO BE INSTALLED ON ALL WHEELCHAIR RAMPS.
2. A LANDSCAPE PLAN INDICATING THE LOCATION OF REQUIRED STREET TREES SHALL BE SUBMITTED TO THE CITY OF WILMINGTON TRAFFIC ENGINEERING DEPT. FOR REVIEW AND APPROVAL PRIOR TO THE RECORDING OF THE FINAL PLAT.
3. ALL PAVEMENT MARKINGS IN PUBLIC RIGHTS-OF-WAY AND FOR DRIVEWAYS ARE TO BE THERMOPLASTIC AND MEET CITY AND/OR NCDOT STANDARDS..
4. ALL PROPOSED VEGETATION WITHIN THE SIGHT TRIANGLES SHALL NOT INTERFERE WITH VISUAL SIGHT LINES FROM 30" - 10'.

SCALE: 1" =30'
0 30 60 90

DESIGN DEVELOPMENT

12028

DES.	JST
CKD.	JPN
DRWN.	NKS
DATE	7/19/13

NORTH CAROLINA PROFESSIONAL SEAL 19651 ENGINEER JOHN S. TUNSTALL

C3.2

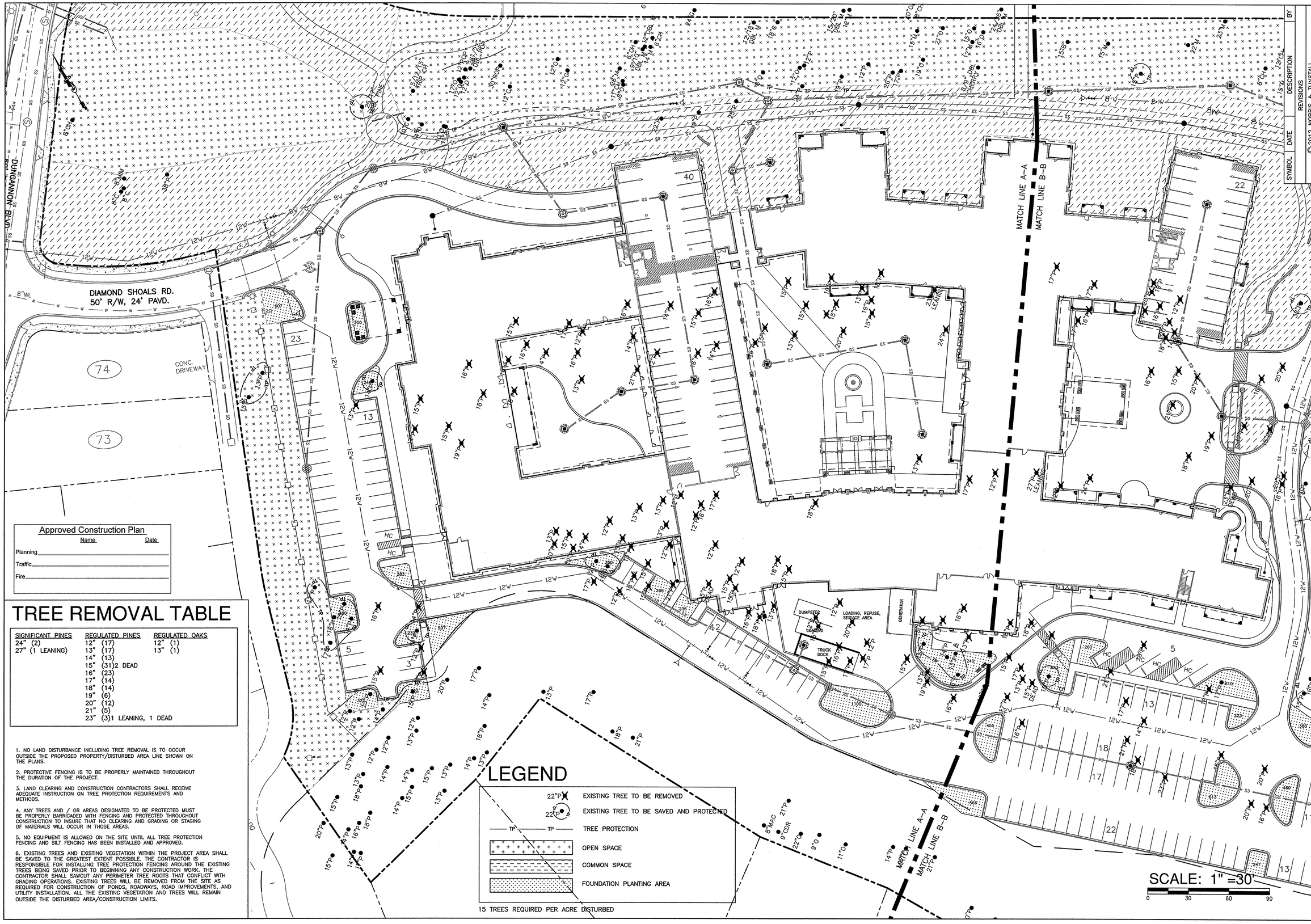

Approved Construction Plan

	Name	Date
Planning		
Traffic		
Fire		

TREE REMOVAL TABLE

SIGNIFICANT PINES	REGULATED PINES	REGULATED OAKS
24" (2)	12" (17)	12" (1)
27" (1 LEANING)	13" (17)	13" (1)
	14" (13)	
	15" (31)2 DEAD	
	16" (23)	
	17" (14)	
	18" (14)	
	19" (6)	
	20" (12)	
	21" (5)	
	23" (3)1 LEANING, 1 DEAD	

1. NO LAND DISTURBANCE INCLUDING TREE REMOVAL IS TO OCCUR OUTSIDE THE PROPOSED PROPERTY/DISTURBED AREA LINE SHOWN ON THE PLANS.

2. PROTECTIVE FENCING IS TO BE PROPERLY MAINTAINED THROUGHOUT THE DURATION OF THE PROJECT.

3. LAND CLEARING AND CONSTRUCTION CONTRACTORS SHALL RECEIVE ADEQUATE INSTRUCTION ON TREE PROTECTION REQUIREMENTS AND METHODS.

4. ANY TREES AND / OR AREAS DESIGNATED TO BE PROTECTED MUST BE PROPERLY BARRICADED WITH FENCING AND PROTECTED THROUGHOUT CONSTRUCTION TO INSURE THAT NO CLEARING AND GRADING OR STAGING OF MATERIALS WILL OCCUR IN THOSE AREAS.

5. NO EQUIPMENT IS ALLOWED ON THE SITE UNTIL ALL TREE PROTECTION FENCING AND SILT FENCING HAS BEEN INSTALLED AND APPROVED.

6. EXISTING TREES AND EXISTING VEGETATION WITHIN THE PROJECT AREA SHALL BE SAVED TO THE GREATEST EXTENT POSSIBLE. THE CONTRACTOR IS RESPONSIBLE FOR INSTALLING TREE PROTECTION FENCING AROUND THE EXISTING TREES BEING SAVED PRIOR TO BEGINNING ANY CONSTRUCTION WORK. THE CONTRACTOR SHALL SAWCUT ANY PERIMETER TREE ROOTS THAT CONFLICT WITH GRADING OPERATIONS. EXISTING TREES WILL BE REMOVED FROM THE SITE AS REQUIRED FOR CONSTRUCTION OF PONDS, ROADWAYS, ROAD IMPROVEMENTS, AND UTILITY INSTALLATION. ALL THE EXISTING VEGETATION AND TREES WILL REMAIN OUTSIDE THE DISTURBED AREA/CONSTRUCTION LIMITS.

LEGEND

- 22"P — EXISTING TREE TO BE REMOVED
- 22"P — EXISTING TREE TO BE SAVED AND PROTECTED
- TP — TREE PROTECTION
- OPEN SPACE
- COMMON SPACE
- FOUNDATION PLANTING AREA

15 TREES REQUIRED PER ACRE DISTURBED

SYMBOL	DATE	DESCRIPTION	BY

REVISIONS

© 2012 NORRIS & TUNSTALL

TREE AND LANDSCAPE PLAN
CAROLINA BAY AT AUTUMN HALL PHASE II
630 CAROLINA BAY RD.
AUTUMN HALL TOWN CENTER
WILMINGTON, NORTH CAROLINA 28403

OWNER:
CAROLINA BAY OF WILMINGTON, LLC
BILL SCHOETTELKOTTE
DIRECTOR OF CONSTRUCTION
2234 S. 41ST STREET
WILMINGTON, NC 28403
910 815-3122

NORRIS & TUNSTALL
CONSULTING ENGINEERS, INC.
1127 FLORAL PARKWAY
SUITE 400
WILMINGTON, NC, 28403
PHONE (910) 343-9653
FAX (910) 343-9604
office@nsteng.com
licence #C-3641

DESIGN DEVELOPMENT

12028

DES. JST
CKD. JPN
DRWN. NKS

DATE 7/19/13

NORTH CAROLINA PROFESSIONAL SEAL 19851 ENGINEER JOHN S. TUNSTALL

C4.1

F:\Projects\2005\05150 Autumn Hall Mull-Use\05150 Plans\dwg\05150_master-22.dwg, 7/16/2013 10:53:50 AM

1. NO LAND DISTURBANCE INCLUDING TREE REMOVAL IS TO OCCUR OUTSIDE THE PROPOSED PROPERTY/DISTURBED AREA LINE SHOWN ON THE PLANS.

2. PROTECTIVE FENCING IS TO BE PROPERLY MAINTAINED THROUGHOUT THE DURATION OF THE PROJECT.

3. LAND CLEARING AND CONSTRUCTION CONTRACTORS SHALL RECEIVE ADEQUATE INSTRUCTION ON TREE PROTECTION REQUIREMENTS AND METHODS.

4. ANY TREES AND / OR AREAS DESIGNATED TO BE PROTECTED MUST BE PROPERLY BARRICADED WITH FENCING AND PROTECTED THROUGHOUT CONSTRUCTION TO INSURE THAT NO CLEARING AND GRADING OR STAGING OF MATERIALS WILL OCCUR IN THOSE AREAS.

5. NO EQUIPMENT IS ALLOWED ON THE SITE UNTIL ALL TREE PROTECTION FENCING AND SILT FENCING HAS BEEN INSTALLED AND APPROVED.

6. EXISTING TREES AND EXISTING VEGETATION WITHIN THE PROJECT AREA SHALL BE SAVED TO THE GREATEST EXTENT POSSIBLE. THE CONTRACTOR IS RESPONSIBLE FOR INSTALLING TREE PROTECTION FENCING AROUND THE EXISTING TREES BEING SAVED PRIOR TO BEGINNING ANY CONSTRUCTION WORK. THE CONTRACTOR SHALL SAWCUT ANY PERIMETER TREE ROOTS THAT CONFLICT WITH GRADING OPERATIONS. EXISTING TREES WILL BE REMOVED FROM THE SITE AS REQUIRED FOR CONSTRUCTION OF PONDS, ROADWAYS, ROAD IMPROVEMENTS, AND UTILITY INSTALLATION. ALL THE EXISTING VEGETATION AND TREES WILL REMAIN OUTSIDE THE DISTURBED AREA/CONSTRUCTION LIMITS.

LEGEND

- 22"P — EXISTING TREE TO BE REMOVED
- 22"P — EXISTING TREE TO BE SAVED AND PROTECTED
- TP — TREE PROTECTION
- OPEN SPACE
- COMMON SPACE
- FOUNDATION PLANTING AREA

15 TREES REQUIRED PER ACRE DISTURBED

SYMBOL	DATE	DESCRIPTION	BY
		REVISIONS	

© 2012 NORRIS & TUNSTALL

Approved Construction Plan

	Name	Date
Planning		
Traffic		
Fire		

MATCH LINE A–A
MATCH LINE B–B

CAROLINA BAY ROAD

SCALE: 1" =30'

0 30 60 90

TREE AND LANDSCAPE PLAN
CAROLINA BAY AT AUTUMN HALL PHASE II
630 CAROLINA BAY RD.
AUTUMN HALL TOWN CENTER
WILMINGTON, NORTH CAROLINA 28403

OWNER:
CAROLINA BAY OF WILMINGTON, LLC
BILL SCHOETTELKOTTE
DIRECTOR OF CONSTRUCTION
2334 S. 41ST STREET
WILMINGTON, NC 28403
910 815-3122

NORRIS & TUNSTALL
CONSULTING ENGINEERS, INC.
1127 FLORAL PARKWAY
SUITE 400
WILMINGTON, NC, 28403
PHONE (910) 343-9653
FAX (910) 343-9604
office@nt-eng.com
licence #C-3641

DESIGN DEVELOPMENT

12028

DES.	JST
CKD.	JPN
DRWN.	NKS
DATE	7/19/13

NORTH CAROLINA PROFESSIONAL SEAL 19851 ENGINEER JOHN P. TUNSTALL

C4.2

7:\Projects\2005\05150 Autumn Hall Mixed-Use\05150 Plans\dwg\05150.master.r22.dwg, 7/16/2013 10:54:18 AM

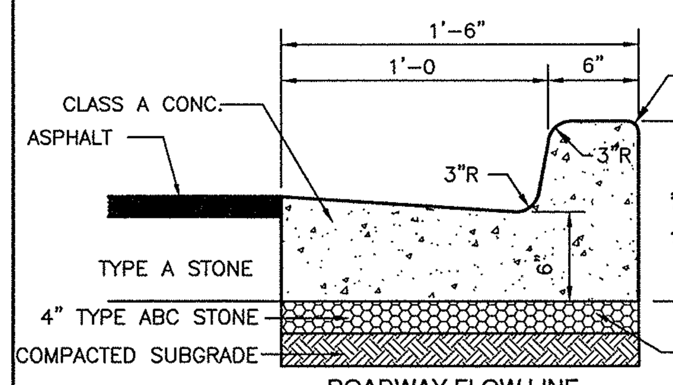

ROADWAY FLOW LINE
CURB SECTION ON SITE
NTS

NOTE: CURB TYPE DEPENDS ON GRADES SHOWN ON GRADING PLAN. GRADES INDICATING FALL AWAY FROM CURB SHALL BE SPILL OFF TYPE CURB. GRADES INDICATING CURB ACCEPTING FLOW SHALL BE FLOW LINE TYPE.

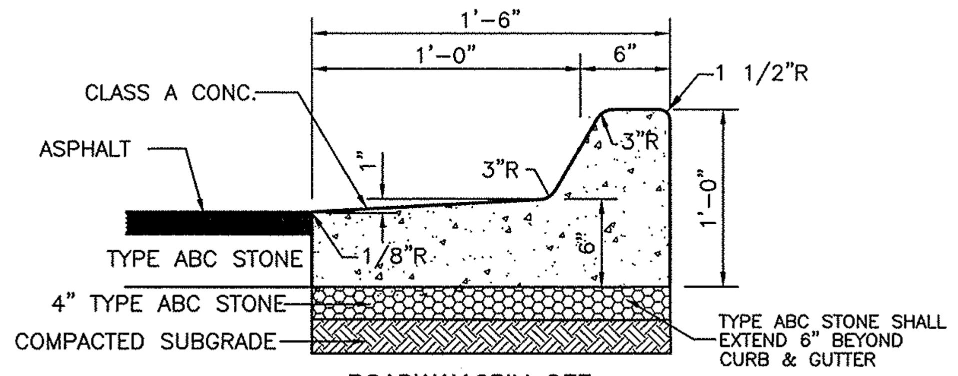

ROADWAY SPILL OFF
CURB SECTION ON SITE
NTS

NOTE: CURB TYPE DEPENDS ON GRADES SHOWN ON GRADING PLAN. GRADES INDICATING FALL AWAY FROM CURB SHALL BE SPILL OFF TYPE CURB. GRADES INDICATING CURB ACCEPTING FLOW SHALL BE FLOW LINE TYPE.

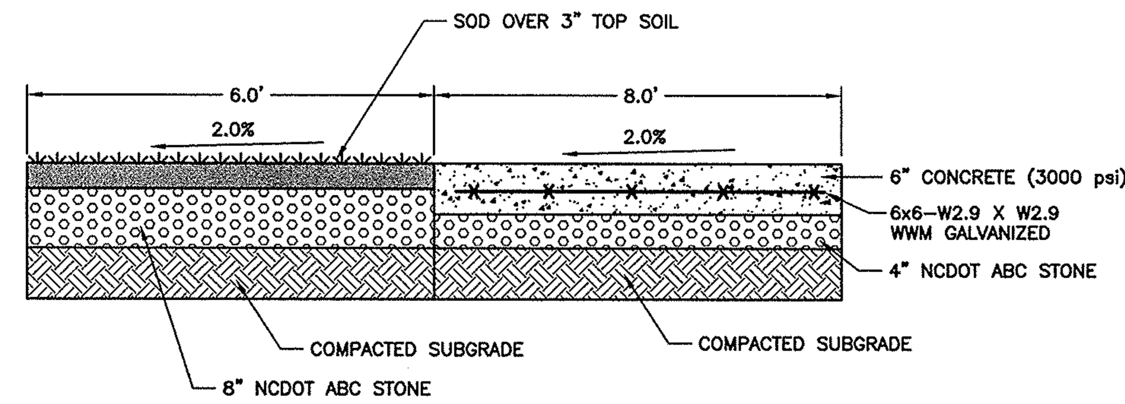

SECTION A-A
NEIGHBORHOOD WALK/EMERGENCY VEHICLE ACCESS
NTS

CITY OF WILMINGTON STANDARD NOTES

1. CONTACT THE NORTH CAROLINA ONE CALL CENTER PRIOR TO DOING ANY DIGGING AT 1-800-632-4949.
2. PRIOR TO ANY CLEARING, GRADING OR CONSTRUCTION ACTIVITY, TREE PROTECTION FENCING WILL BE INSTALLED AROUND PROTECTED TREES OR GROVES OF TREES AND NO CONSTRUCTION WORKERS, TOOLS, MATERIALS, OR VEHICLES ARE PERMITTED WITHIN THE TREE PROTECTION FENCING;
3. ALL PAVEMENT MARKINGS IN PUBLIC RIGHTS-OF-WAY AND FOR DRIVEWAYS ARE TO BE THERMOPLASTIC AND MEET CITY AND/OR NCDOT STANDARDS.
4. ALL PARKING STALL MARKINGS AND LANE ARROWS WITHIN THE PARKING AREAS SHALL BE WHITE.
5. INSTALL REFLECTORS PER CITY AND NCDOT STANDARDS. TRAFFIC ENGINEERING MUST APPROVE OF PAVEMENT MARKING LAYOUT PRIOR TO ACTUAL STRIPING.
6. ALL TRAFFIC CONTROL SIGNS AND MARKINGS OFF THE RIGHT-OF-WAY ARE TO BE MAINTAINED BY THE PROPERTY OWNER IN ACCORDANCE WITH MUTCD STANDARDS.
7. TRAFFIC CONTROL DEVICES (INCLUDING SIGNS AND PAVEMENT MARKINGS) IN AREAS OPEN TO PUBLIC TRAFFIC ARE TO MEET MUTCD (MANUAL ON UNIFORM TRAFFIC CONTROL DEVICES) STANDARDS.
8. IT SHALL BE THE RESPONSIBILITY OF THE SUBDIVIDER TO ERECT OFFICIAL STREET NAME SIGNS AT ALL INTERSECTIONS ASSOCIATED WITH THE SUBDIVISION IN ACCORDANCE WITH THE TECHNICAL STANDARDS AND SPECIFICATIONS MANUAL. THE SUBDIVIDER MAY ACQUIRE AND ERECT OFFICIAL STREET NAME SIGNS OR MAY CHOOSE TO CONTRACT WITH THE CITY TO INSTALL THE STREET SIGNS AND THE SUBDIVIDER SHALL PAY THE COST OF SUCH INSTALLATION. CONTACT TRAFFIC ENGINEERING AT 341-7888 TO DISCUSS INSTALLATION OF TRAFFIC AND STREET NAME SIGNS. POSTED STREET NAMES MUST BE APPROVED PRIOR TO INSTALLATION OF STREET NAME SIGNS.
9. CONTACT TRAFFIC ENGINEERING AT 341-7888 FOURTY-EIGHT HOURS PRIOR TO ANY EXCAVATION IN THE RIGHT-OF-WAY.
10. A UTILITY CUT PERMIT IS REQUIRED FOR EACH OPEN CUT OF A CITY STREET. CONTACT 341-5888 FOR MORE DETAILS. IN CERTAIN CASES AN ENTIRE RESURFACING OF THE AREA BEING OPEN CUT MAY BE REQUIRED.
11. ANY BROKEN OR MISSING SIDEWALK PANELS, DRIVEWAY PANELS, AND CURBING WILL BE REPLACED.
12. CONTACT KAREN DIXON AT 341-7888 TO DISCUSS STREET LIGHTING OPTIONS.
13. PROJECT SHALL COMPLY WITH CFPUA CROSS CONNECTION CONTROL REQUIREMENTS. WATER METER(S) CANNOT BE RELEASED UNTIL ALL REQUIREMENTS ARE MET AND THE STATE HAS GIVEN THEIR FINAL APPROVAL. CALL 343-3910 FOR INFORMATION.
14. IF THE CONTRACTOR DESIRES CFPUA WATER FOR CONSTRUCTION HE SHALL APPLY IN ADVANCE FOR THIS SERVICE AND MUST PROVIDE A REDUCED PRESSURE ZONE (RPZ) BACKFLOW PREVENTION DEVICE ON THE DEVELOPER'S SIDE OF THE WATER METER BOX.
15. ANY IRRIGATION SYSTEM SUPPLIED BY CFPUA WATER SHALL COMPLY WITH CFPUA CROSS CONNECTION CONTROL REGULATIONS. CALL 332-6558 FOR INFORMATION.
16. ANY BACKFLOW PREVENTION DEVICES REQUIRED BY CFPUA WILL NEED TO BE ON THE LIST OF APPROVED DEVICES BY USCFCCCHR OR ASSE.
17. WHEN PVC WATER MAINS AND/OR POLYETHYLENE SERVICES ARE PROPOSED, THE PIPES ARE TO BE MARKED WITH NO. 10 INSULATED SINGLE STRAND COPPER WIRE INSTALLED THE ENTIRE LENGTH AND SECURED TO ALL VALVES. THIS WIRE IS TO BE ACCESSIBLE AT ALL FIRE HYDRANTS AND WATER METER BOXES TO AID IN FUTURE LOCATION OF FACILITIES.
18. THE NUMBER AND SPACING OF DRIVEWAYS FOR ALL INTERCONNECTED SITES WILL BE DETERMINED BY THE COMBINED FRONTAGE OF THE INTERCONNECTED PROPERTIES.
19. UNDERGROUND FIRE LINE MUST BE PERMITTED AND INSPECTED BY THE WILMINGTON FIRE DEPARTMENT FROM THE PUBLIC ROW TO THE BUILDING. CONTACT THE WILMINGTON FIRE DEPARTMENT DIVISION OF FIRE AND LIFE SAFETY AT 910-343-0696 FOR ADDITIONAL INFORMATION.

SITE WORK NOTES:

1. THE CONTRACTOR SHALL VISIT THE SITE TO BECOME FAMILIAR WITH FIELD CONSTRUCTION CONDITIONS.
2. CONTRACTOR SHALL COORDINATE WORK WITHIN NCDOT AND LOCAL RIGHT OF WAYS WITH PROPER AUTHORITIES AND SHALL MEET ANY REQUIREMENTS AS TO TRAFFIC CONTROL AND CONNECTION TO EXISTING STREETS.
3. CLEARING AND GRUBBING: REMOVE ALL TREES AS REQUIRED UNLESS OTHERWISE NOTED TO REMAIN, STUMPS, ROOTS, SHRUBBERY, ASPHALT, CONCRETE, STRUCTURES, BURIED UTILITIES, STORAGE TANKS, ETC. WITHIN LIMITS OF CONSTRUCTION.
4. STRIPPING: BEFORE EXCAVATING OR FILLING, REMOVE ALL TOPSOIL, WOOD, LEAVES, AND ANY OTHER UNSUITABLE MATERIAL.
5. MUCKING: REMOVE ANY SOFT, ORGANIC SILT MATERIALS AND EXISTING BURIED CONSTRUCTION DEBRIS AS REQUIRED AND FILL TO SUBGRADE ELEVATIONS WITH A CLEAN SELECT-FILL COMPACTED AS SPECIFIED.
6. DISPOSAL: CLEARED, GRUBBED, STRIPPED OR EXCAVATED SPOIL SHALL BE REMOVED FROM SITE AND DISPOSED OF IN ACCORDANCE WITH ALL APPLICABLE LOCAL AND STATE CODES.
7. BORROW MATERIAL: THE CONTRACTOR SHALL FURNISH BORROW MATERIAL REQUIRED FROM OFF SITE AND OBTAIN ALL REQUIRED PERMITS ASSOCIATED WITH BORROW OPERATIONS.
8. FILL AND COMPACTION: AFTER STRIPPING THOSE AREAS DESIGNATED TO RECEIVE FILL SHOULD BE PROOFROLLED. THE TOP 8" OF SUBGRADE SHALL BE COMPACTED TO AT LEAST 98% OF MAXIMUM DENSITY AT OPTIMUM MOISTURE CONTENT. ANY AREA WHICH PUMPS OR RUTS EXCESSIVELY SHOULD BE UNDERCUT AND REPLACED WITH A CLEAN, SILTY OR CLAYEY SAND HAVING A UNIFIED SOIL CLASSIFICATION OF SP, SM, OR SC. FILL MATERIAL 5" OUTSIDE OF BUILDING AREAS SHALL THEN BE PLACED IN LAYERS NOT TO EXCEED 8" AND COMPACTED TO AT LEAST 95% OF THE STANDARD PROCTOR MAXIMUM DRY DENSITY (ASTM D-698) WITH THE UPPER 12 INCHES OF SUBGRADE BEING COMPACTED TO 98% OF THE STANDARD PROCTOR MAXIMUM DRY DENSITY. FILL MATERIALS WITHIN BUILDING AREAS TO A LINE OUTSIDE THE BUILDING AREAS SHALL BE PLACED IN LAYERS NOT TO EXCEED 8" AND COMPACTED TO AT LEAST 98% OF THE STANDARD PROCTOR MAXIMUM DRY DENSITY (ASTM D-698) WITH THE UPPER 12 INCHES OF SUBGRADE BEING COMPACTED IN 6 INCH LAYERS TO 100% OF THE STANDARD PROCTOR MAXIMUM DRY DENSITY. IN AREAS WHERE NO STRUCTURAL FILL IS TO BE PLACED THE UPPER 12 INCHES OF IN-PLACE SUBGRADE SHOULD BE COMPACTED TO AT LEAST 98% OF THE STANDARD PROCTOR MAXIMUM DRY DENSITY. IF THE MATERIAL IS TOO DRY TO COMPACT TO THE REQUIRED DENSITY EACH LAYER SHALL BE WETTED IN ACCORDANCE WITH COMPACTION REQUIREMENTS. IF THE MATERIAL IS TOO WET TO SECURE PROPER COMPACTION, IT SHALL BE HARROWED REPEATEDLY OR OTHERWISE AERATED WITH SUITABLE EQUIPMENT UNTIL OPTIMUM MOISTURE CONTENT IS OBTAINED. FILL SHALL BE PLACED IN SUCH A MANNER THAT THE SURFACE WILL DRAIN READILY AT ALL TIMES. SEE STRUCTURAL NOTES AND SOILS REPORT FOR ADDITIONAL REQUIREMENTS.
9. LAYOUT: THE CONTRACTOR SHALL PROVIDE ALL LAYOUT REQUIRED TO CONSTRUCT HIS WORK.
10. THE CONTRACTOR IS RESPONSIBLE FOR THE LOCATION AND PROTECTION OF EXISTING UTILITIES DURING CONSTRUCTION.
11. EXISTING BOUNDARY AND TOPOGRAPHIC INFORMATION FROM SURVEY BY MICHAEL UNDERWOOD AND ASSOC. PA AND PROVIDED BY OWNER.
12. THE CONTRACTOR SHALL VERIFY DIMENSIONS AT JOBSITE.
13. THE CONTRACTOR IS RESPONSIBLE FOR THE COORDINATION OF RELOCATION OR DISCONNECTION OF ALL EXISTING UTILITIES WITH APPLICABLE AGENCIES AND AUTHORITIES.
14. ALL PAVEMENT AND BASE MATERIALS AND WORKMANSHIP SHALL CONFORM TO NCDOT STANDARDS.
15. WATER AND SEWER SERVICES SHALL BE INSTALLED TO MEET LOCAL AND STATE PLUMBING CODES. METER AND TAPS SHALL MEET ALL LOCAL REQUIREMENTS.
16. ALL AREAS SHALL BE GRADED FOR POSITIVE DRAINAGE.
17. SEE SOILS REPORT FOR ADDITIONAL REQUIREMENTS.
18. CONTRACTOR SHALL NOTE THAT EARTHWORK QUANTITIES ARE HIS RESPONSIBILITY. PLANS DO NOT REPRESENT A BALANCED EARTHWORK CONDITION.
19. REINF. CONC. PIPE SHALL BE CLASS III W/RUBBER GASKETED JOINT OR "RAM NECK". INSTALL PER MANUFACTURER'S REQUIREMENTS.
20. USE WHITE LANE MARKING PAINT FOR ALL PAVEMENT MARKINGS. PAINT SHALL BE A CHLORINATED RUBBER ALKYD, FS TT-P-115, TYPE III, FACTORY MIXED, QUICK DRYING, NON-BLEEDING.
21. REFER TO THE PLUMBING DRAWINGS FOR LOCATION AND INVERTS OF NEW WASTE AND WATER LINES.
22. SEE PLUMBING SHEETS FOR LOCATION AND INVERTS OF CONDENSATE AND ROOF DRAINS. THE GENERAL CONTRACTOR IS RESPONSIBLE TO CONNECT THESE LINES TO THE UNDERGROUND DOWNSPOUT DRAIN AT THE REQUIRED DEPTH TO DRAIN. ALL UNDERGROUND DOWNSPOUT DRAINS SHALL HAVE A MINIMUM SLOPE OF 1% AND BE C900 PVC PIPE

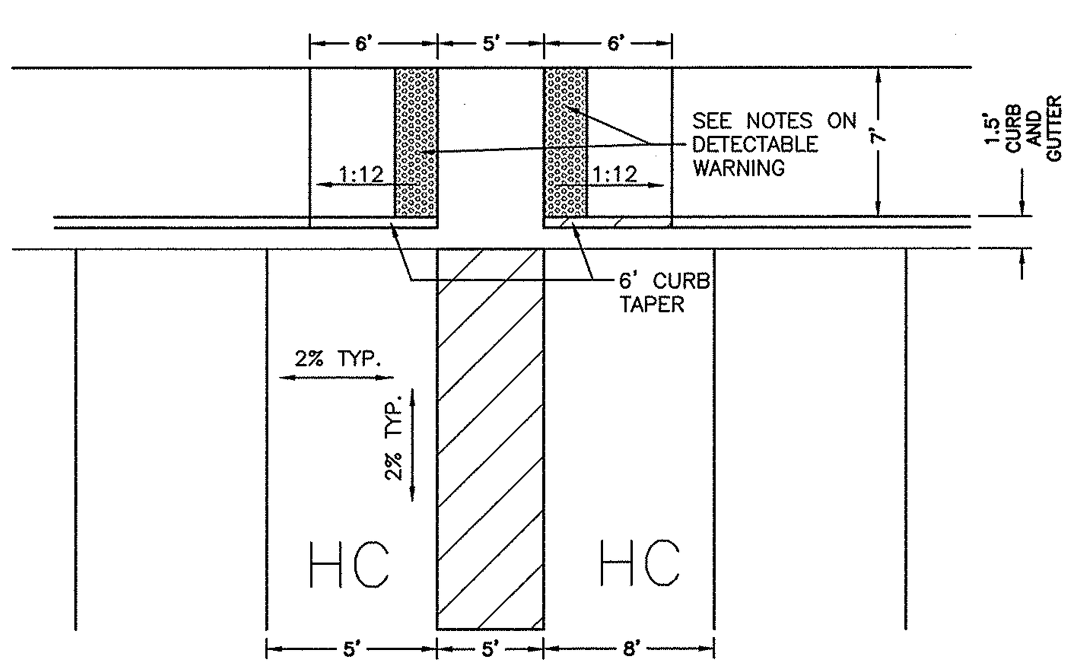

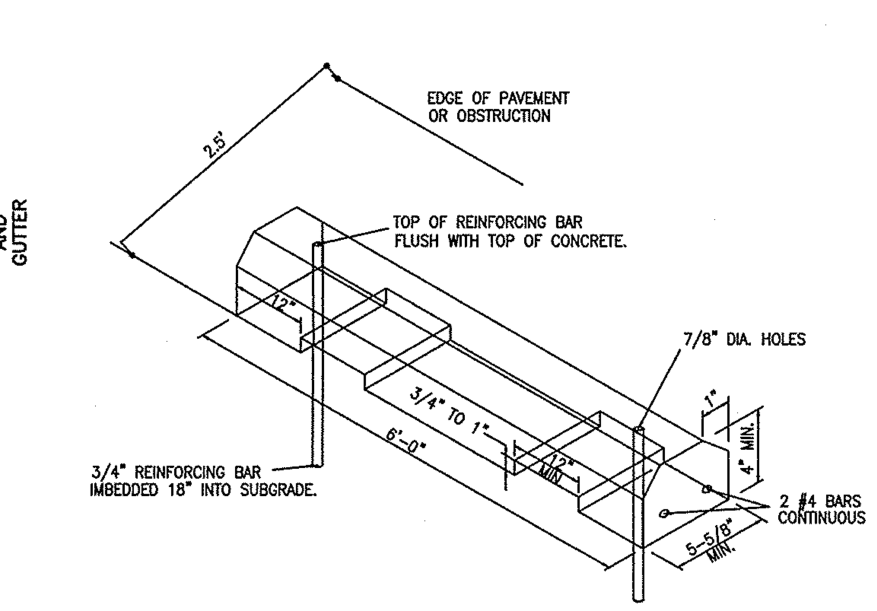

CONCRETE WHEELSTOP DETAIL
NTS

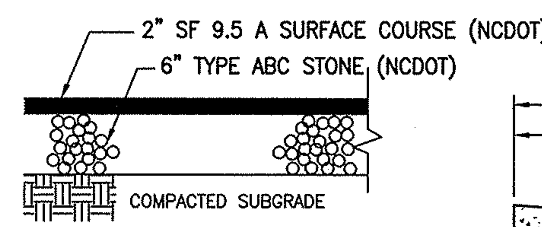

NOTE: PAVEMENT SECTION MAY VARY DEPENDING UPON FIELD CONDITIONS. CONTRACTOR SHALL COORDINATE w/OWNER & GEOTECHNICAL ENGINEER TO DETERMINE ACTUAL PAVEMENT SECTION.

ASPHALT PAVEMENT SECTION
N.T.S.

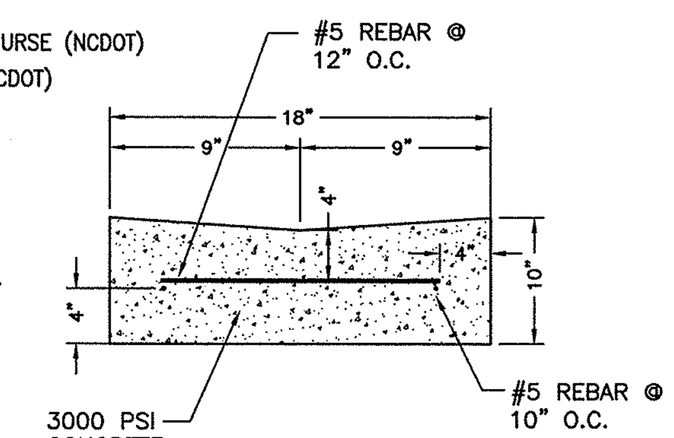

REINFORCED VALLEY GUTTER DETAIL
NTS

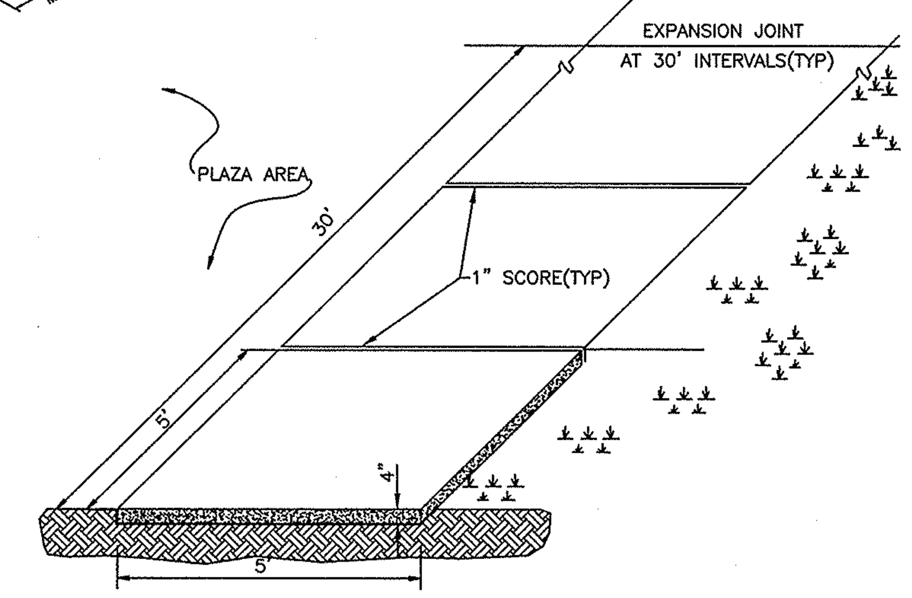

STANDARD SIDEWALK DETAIL
SD 8-15
NOT TO SCALE

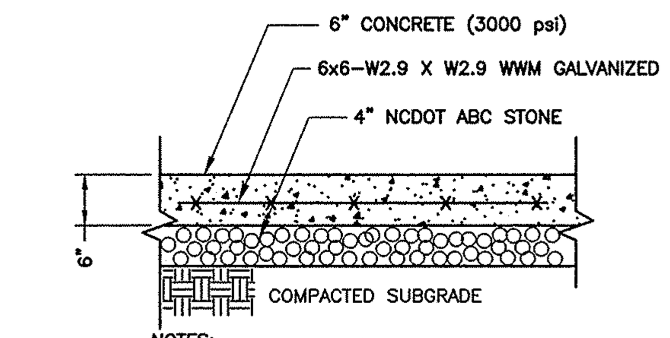

NOTES:
1. CONTROL JOINTS SHALL BE EVERY 15 FT. (MAX.) AND EXPANSION JOINTS SHALL BE EVERY 50 FT. (MAX).
2. PAVEMENT SECTION MAY VARY DEPENDING UPON FIELD CONDITIONS. THE PAVING CONTRACTOR SHALL COORDINATE WITH OWNER REPRESENTATIVE AND GEOTECHNICAL ENGINEER TO DETERMINE ACTUAL PAVEMENT SECTION.

HEAVY DUTY CONCRETE PAVEMENT SECTION
NTS

NOTES:
1. SIDEWALK THICKNESS SHALL BE 4" UNLESS NOTED OTHERWISE.
2. CONTRACTION JOINTS (C.J.) SPACE SAME AS SIDEWALK WIDTH.
3. THICKEN SIDEWALK TO 6" AT DRIVEWAYS.
4. THICKEN SIDEWALK TO 6" IN LAST 3' WHERE IT ABUTS PAVEMENT WITH NO CURB.
5. 1/2" EXPANSION JOINT (E.J.) AND SNAP CAP EXPANSION JOINT COVERS ARE REQUIRED AT 50' MAX. AT SIDEWALK JUNCTIONS, AT STRUCTURES, AND AS NOTED ON SITE PLAN.
6. PROVIDE A LAYER OF 15# BLDG. FELT BETWEEN WALK AND ADJACENT PARALLELING CURB OR STRUCTURE.

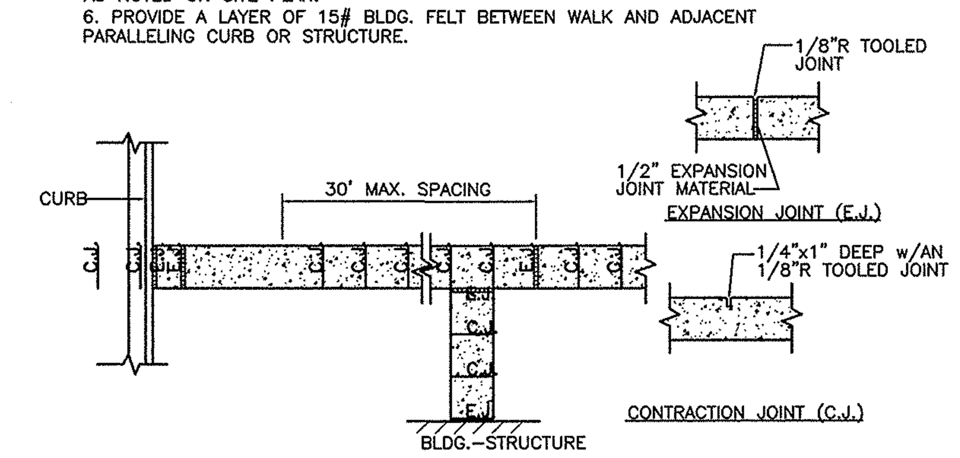

SIDEWALK JOINT DETAILS
NTS

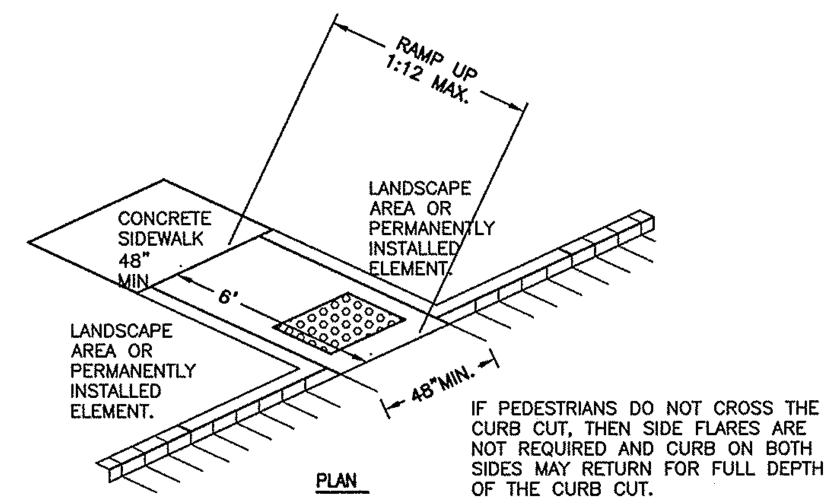

* SEE NOTES ON DETECTABLE WARNING

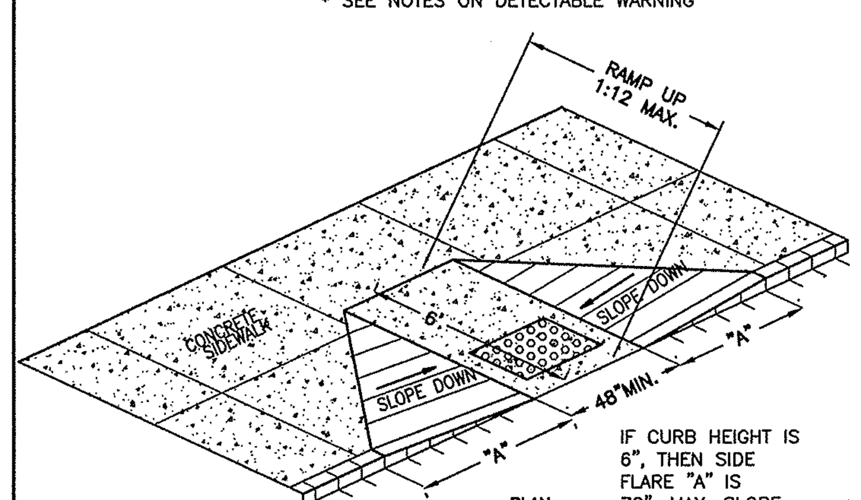

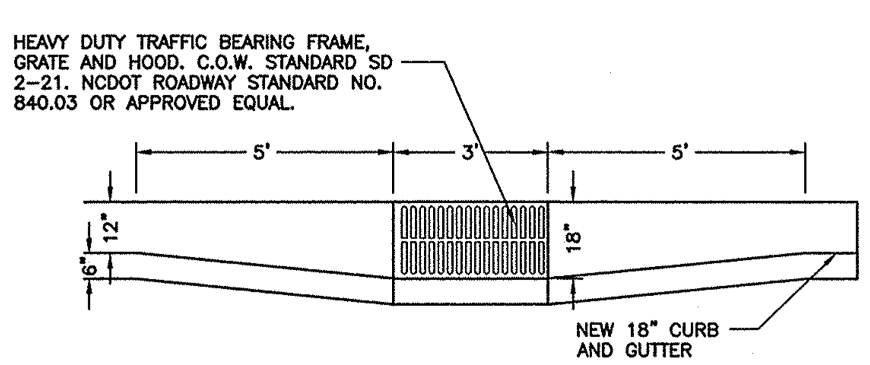

18" CURB AND GUTTER INLET OFFSET DETAIL
NTS

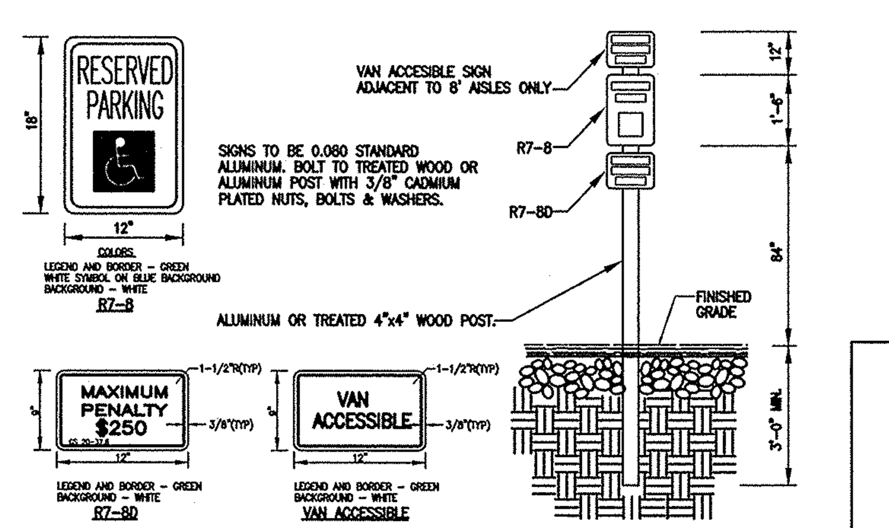

TYPICAL HANDICAPPED SIGN DETAIL
NTS

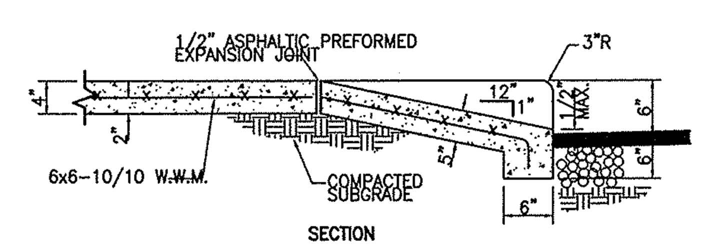

SECTION
WHEEL CHAIR RAMP

NOTE:
1. RAMP SHALL HAVE A DETECTABLE WARNING COMPLYING WITH ADA GUIDELINES:
2. THE DETECTABLE WARNINGS AT CURB RAMPS SHALL BE 24 INCHES MINIMUM IN THE DIRECTION OF TRAVEL AND EXTEN THE FULL WIDTH OF THE CURB RAMP OR FLUSH SURFACE.
3. MARKED CROSSINGS THAT ARE RAISED TO THE SAME LEVEL AS THE ADJOINING SIDEWALK SHALL BE PRECEDED BY A 24 INCH DEEP DETECTABLE WARNING EXTENDING THE FULL WIDTH OF THE MARKED CROSSING.
4. DETECTABLE WARNINGS SHALL CONSIST OF RAISED TRUNCATED DOMES WITH A DIAMETER OF NOMINAL 0.9 IN (23 MM), A HEIGHT OF NOMINAL 0.2 IN (5 MM) AND A CENTER-TO-CENTER SPACING OF NOMINAL 2.35 IN (60 MM) AND SHALL CONTRAST VISUALLY WITH ADJOINING SURFACES, EITHER LIGHT-ON-DARK, OR DARK-ON-LIGHT. THE MATERIAL USED TO PROVIDE CONTRAST SHOULD CONTRAST BY AT LEAST 70% - REFER TO ADA GUIDELINES FOR DEFINITION OF "CONTRAST".
5. THE MATERIAL USED TO PROVIDE CONTRAST SHALL BE AN INTEGRAL PART OF THE WALKING SURFACE. DETECTABLE WARNINGS USED ON INTERIOR SURFACES SHALL DIFFER FROM ADJOINING WALKING SURFACES IN RESILIENCY OR SOUND-ON-CANE CONTACT.

TYPICAL SIDEWALK AND
WHEEL CHAIR RAMP DETAIL
NTS

GENERAL NOTES

I. LOCATION OF WHEELCHAIR RAMPS:

1. IN ACCORDANCE WITH THE RATIFIED HOUSE BILL 1296, ALL STREET CURBS IN NORTH CAROLINA BEING CONSTRUCTED OR RECONSTRUCTED FOR MAINTENANCE PROCEDURES, TRAFFIC OPERATIONS, REPAIRS, CORRECTION OF UTILITIES OR ALTERED FOR ANY REASON AFTER SEPTEMBER 1, 1973 SHALL PROVIDE WHEELCHAIR RAMPS FOR THE PHYSICALLY HANDICAPPED AT ALL INTERSECTIONS WHERE BOTH CURB AND GUTTERS AND SIDEWALKS ARE PROVIDED AND AT OTHER MAJOR POINTS OF PEDESTRIAN FLOW.
2. WHEELCHAIR RAMPS SHOULD BE LOCATED AS INDICATED IN DETAIL DRAWINGS, HOWEVER EXISTING LIGHT POLES, FIRE HYDRANTS, DROP INLETS, ETC. MAY AFFECT PLACEMENT.

II. CONSTRUCTION NOTES:

1. NO SLOPE SHALL EXCEED 1"=1" (12:1) ON THE RAMP OR SIDEWALK.
2. IN NO CASE SHALL THE WIDTH OF WHEELCHAIR RAMPS BE LESS THAN 40" (3'-4"). WIDTHS MAY EXCEED 40" IF NECESSARY.
3. USE CLASS "A" CONCRETE WITH THE SURFACE HAVING A ROUGH, NON-SKID TYPE FINISH.
4. 1/2" EXPANSION JOINT WILL BE REQUIRED WHERE THE CONCRETE WHEELCHAIR RAMP JOINS ANY RIGID PAVEMENT OR STRUCTURE.
5. CONSTRUCTION METHODS SHALL CONFORM WITH THOSE OF THE GOVERNING BODY WHICH HAS JURISDICTION OF THE PARTICULAR STREET.

III. ADDITIONAL NOTES:

1. THE INSIDE PEDESTRIAN CROSSWALK LINES SHALL BE ESTABLISHED BY BISECTING THE INTERSECTION RADII WHERE MARKED (SEE NOTE 6).
2. THE WHEELCHAIR RAMP SHALL BE LOCATED SO THAT THE BEGINNING OF THE WHEEL CHAIR RAMP WILL BE TWO FEET FROM THE INSIDE PEDESTRIAN CROSSWALK LINE.
3. THE WIDTH OF THE PEDESTRIAN CROSSWALK SHALL BE 10 FEET UNLESS A GREATER WIDTH IS REQUIRED TO ACCOMMODATE THE PEDESTRIAN TRAFFIC.
4. STOP BARS SHALL BE USED WHERE IT IS IMPORTANT TO INDICATE THE POINT BEHIND WHICH VEHICLES ARE REQUIRED TO STOP IN COMPLIANCE WITH A TRAFFIC SIGNAL, STOP SIGN, OR OTHER LEGAL REQUIREMENTS.
5. PARKING SHALL BE ELIMINATED A MINIMUM OF 20 FEET BACK OF PEDESTRIAN CROSSWALK.
6. ALL PAVEMENT MARKINGS SHALL BE IN ACCORDANCE WITH THE LATEST EDITION OF THE MANUAL OF UNIFORM TRAFFIC CONTROL DEVICES, PUBLISHED BY THE FEDERAL HIGHWAY ADMINISTRATION. THIS IS AVAILABLE FROM THE SUPERINTENDENT OF DOCUMENTS, U.S GOVERNMENT PRINTING OFFICE, WASHINGTON, D.C. 20402.

GUIDELINES FOR WHEELCHAIR RAMPS
CITY OF WILMINGTON SD 8-09

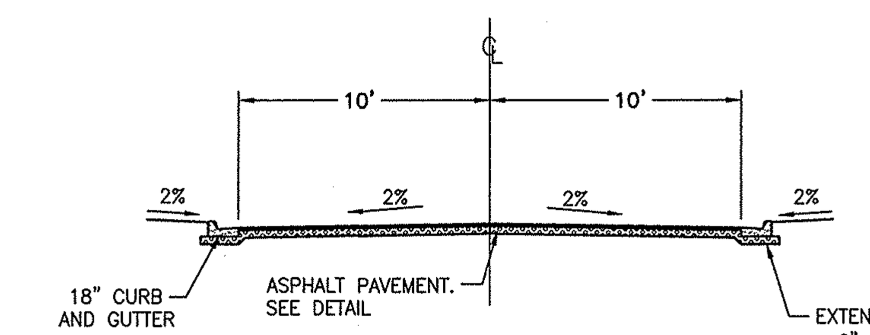

CAROLINA BAY RD.
STREET SECTION

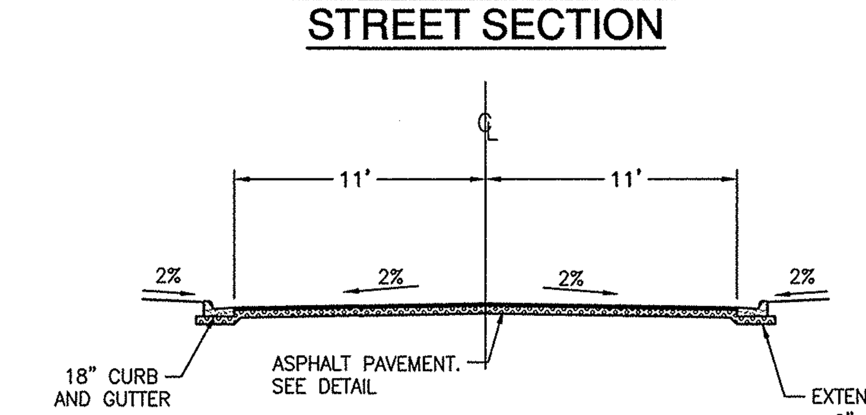

DIAMOND SHOALS RD.
STREET SECTION

Approved Construction Plan

	Name	Date
Planning		
Traffic		
Fire		

CITY OF WILMINGTON NORTH CAROLINA
Public Services Engineering Division
APPROVED STORMWATER MANAGEMENT PLAN
Date:____________ Permit #______
Signed: ______________________

SYMBOL	DATE	DESCRIPTION	BY

REVISIONS

© 2012 NORRIS & TUNSTALL

NOTES AND DETAILS
CAROLINA BAY AT AUTUMN HALL PHASE II
630 CAROLINA BAY RD.
AUTUMN HALL TOWN CENTER
WILMINGTON, NORTH CAROLINA 28403

OWNER:
CAROLINA BAY OF WILMINGTON, LLC
BILL SCHOETTELKOTTE
DIRECTOR OF CONSTRUCTION
2334 S. 41ST STREET
WILMINGTON, NC 28403
910 815-3122

NORRIS & TUNSTALL
CONSULTING ENGINEERS, INC.
1127 FLORAL PARKWAY
SUITE 400
WILMINGTON, NC, 28403
PHONE (910) 343-9653
FAX (910) 343-9604
office@nkteng.com
licence #C-3641

DESIGN DEVELOPMENT

12028

DES.	JST
CKD.	JPN
DRWN.	NKS
DATE	7/19/13

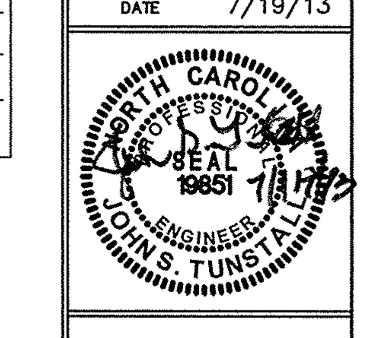

C5.1

F:\Projects\2005\05150 Autumn Hall Muli-Use\05150 Plans\dwg\05150.master.r22.dwg, 7/16/2013 10:54:46 AM

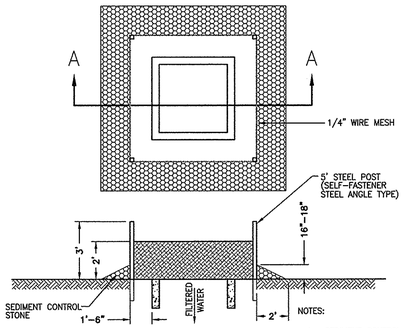

SECTION A-A

MULTI-DIRECTIONAL FLOW

INLET PROTECTION

NTS

NOTES:

1. SEDIMENT CONTROL STONE SHALL BE #5 OR #57 AND SHALL BE PAID FOR AT THE CONTRACT UNIT PRICE PER TON "SEDIMENT CONTROL STONE." STONE SHALL BE 16" TO 18" DEEP.
2. WIRE MESH SHALL BE HARDWARE CLOTH 19 GAGE MIN. AND SHALL HAVE 1/4" MESH OPENINGS.

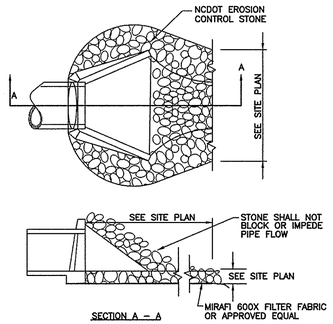

SECTION A – A

NOTE: FILTER FABRIC AND STONE SHALL BE TOED UNDER FLARED END SECTION

ENERGY DISSIPATOR

NTS

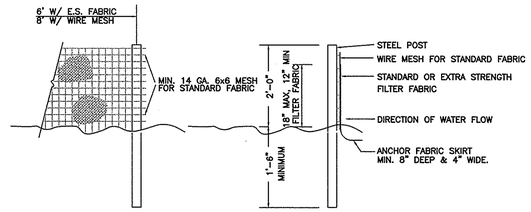

NOTES:

1. SYN. FENCE FABRIC SHALL BE MIN. OF 30" IN WIDTH WITH 30 LB/IN TENSILE STRENGTH FOR STANDARD FABRIC AND 50 LB/IN FOR EXTRA STRENGTH.
2. FABRIC SHALL BE CONTINUOUS LENGTH. IF JOINTS ARE NECESSARY, LAP FABRIC POST TO POST.
3. STEEL POST SHALL BE MIN 4' IN HEIGHT AND BE OF THE SELF-FASTENER STEEL ANGLE TYPE.

TEMPORARY SILT FENCE

NTS

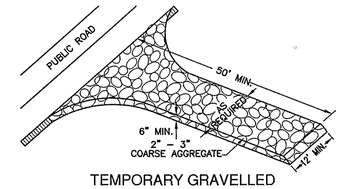

TEMPORARY GRAVELLED CONSTRUCTION ENTRANCE

NTS

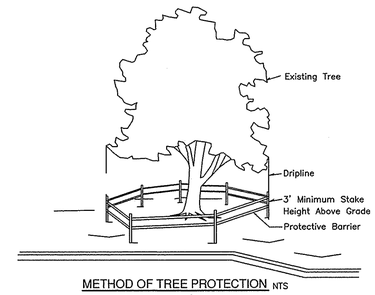

METHOD OF TREE PROTECTION

NTS

CLEARLY mark the trees to be saved prior to construction and erect a protective barrier at the dripline.

Dripline–The area of soil directly beneath the tree extending out to the tips of the outermost branches.

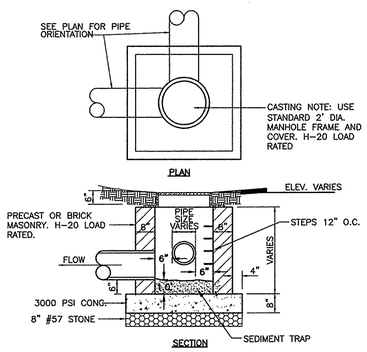

SECTION

MUST COMPLY WITH CITY OF WILMINGTON STANDARDS

JUNCTION BOX DETAIL

NTS

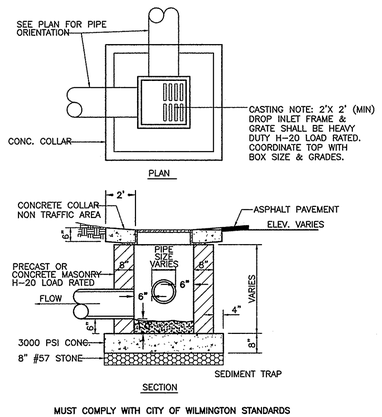

SECTION

MUST COMPLY WITH CITY OF WILMINGTON STANDARDS

DROP INLET DETAIL

NTS

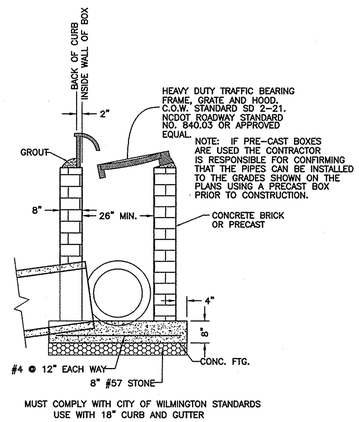

NOTE: IF PRE-CAST BOXES ARE USED THE CONTRACTOR IS RESPONSIBLE FOR CONFIRMING THAT THE PIPES CAN BE INSTALLED TO THE GRADES SHOWN ON THE PLANS USING A PRECAST BOX PRIOR TO CONSTRUCTION.

MUST COMPLY WITH CITY OF WILMINGTON STANDARDS USE WITH 18" CURB AND GUTTER

TYPICAL CATCH BASIN

NTS

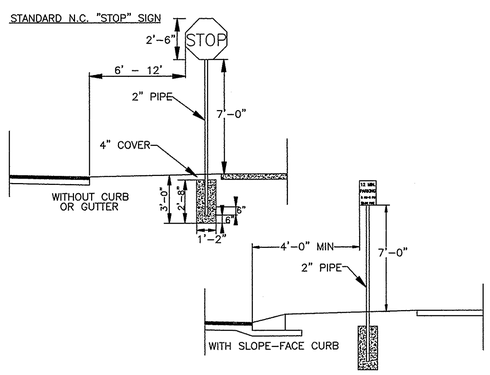

STANDARD INFORMATION SIGN

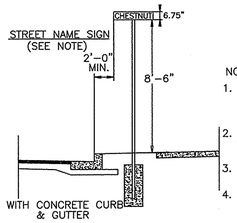

NOTES:

1. STREET NAME SIGNS SHALL BE A MINIMUM OF 6" EXTRUDED ALUMINUM BLADES USING A MINUMUM OF 4" C SERIES LETTERING IN REFLECTIVE SILVER & REFLECTIVE GREEN BACKGROUND.
2. ALL REFLECTIVE SIGNS SHALL BE MADE OF ENGINEERING GRADE OR HIGH INTENSITY GRADE REFLECTIVE SHEETING OR APPROVED EQUIVALENT.
3. ALL SIGNS PLACED IN RIGHT-OF-WAY WILL BE APPROVED BY TRAFFIC ENGINEERING DIVISION.
4. ALL FOOTINGS TYPICAL FOR ALL SIGNS, WHICH NEED TO BE ANCHORED IN CONCRETE.

STANDARD SIGN INSTALLATION LOCATION SD 15-03

NOT TO SCALE

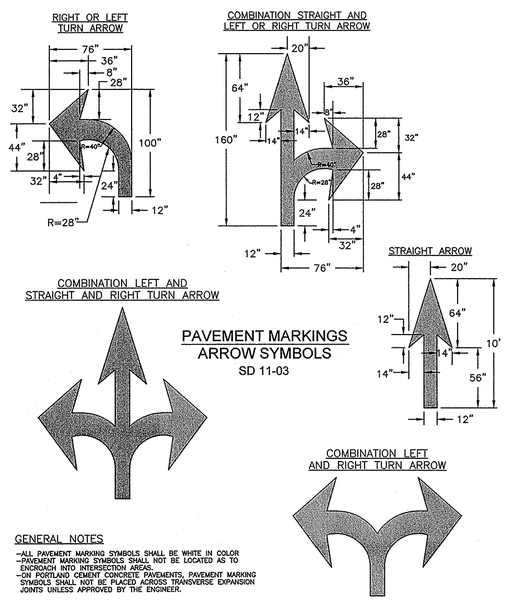

PAVEMENT MARKINGS ARROW SYMBOLS

SD 11-03

GENERAL NOTES

–ALL PAVEMENT MARKING SYMBOLS SHALL BE WHITE IN COLOR
–PAVEMENT MARKING SYMBOLS SHALL NOT BE LOCATED AS TO ENCROACH INTO INTERSECTION AREAS.
–ON PORTLAND CEMENT CONCRETE PAVEMENTS, PAVEMENT MARKING SYMBOLS SHALL NOT BE PLACED ACROSS TRANSVERSE EXPANSION JOINTS UNLESS APPROVED BY THE ENGINEER.

EROSION CONTROL NOTES AND MAINTENANCE PLAN

1. All erosion and sediment control measures will be checked for stability and operation following every runoff-producing rainfall, but in no case, less than once every week and within 24 hours of every half-inch rainfall.
2. All points of egress will have construction entrances that will be periodically top-dressed with an additional 2 inches of #4 stone to maintain proper depth. They will be maintained in a condition to prevent mud or sediment from leaving the site. Immediately remove objectionable material spilled washed or tracked onto the construction entrance or roadways.
3. Sediment will be removed from hardware cloth and gravel inlet protection, block and gravel inlet protection, rock doughnut inlet protection and rock pipe inlet protection when the designed storage capacity has been half filled with sediment. Rock will be cleaned or replaced when the sediment pool no longer drains as designed. Debris will be removed from the rock and hardware cloth to allow proper drainage. Silt sacks will be emptied once a week and after every rain event. Sediment will be removed from around beaver dams, dandy sacks and socks once a week and after every rain event.
4. Diversion ditches will be cleaned out immediately to remove sediment or obstructions from the flow area. The diversion ridges will also be repaired. Swales must be temporarily stabilized within 21 calendar days of cease of any phase of activity associated with a swale.
5. Sediment will be removed from behind the sediment fence when it becomes half filled. The sediment fence will be repaired as necessary to maintain a barrier. Stakes must be steel. Stake spacing will be 6 feet max. with the use of extra strength fabric, without wire backing. Stake spacing will be 8 feet max. when standard strength fabric and wire backing are used. If rock filters are designed at low points in the sediment fence, the rock will be repaired or replaced if it becomes half-full of sediment, no longer drains as designed or is damaged.
6. Sediment will be removed from the sediment basin pond forebay when the design storage capacity has been half filled with sediment and at the end of construction.

Land Quality Requires:

7. All seeded areas will be fertilized, reseeded as necessary and mulched according to specifications in the vegetative plan to maintain a vigorous, dense vegetative cover. All slopes will be stabilized within 21 calendar days. All other areas will be stabilized within 15 working days.

Water Quality Requires:

8. All seeded areas will be fertilized, reseeded as necessary and mulched according to specifications in the vegetative plan to maintain a vigorous, dense vegetative cover. All perimeter dikes, swales, ditches, perimeter slopes, all slopes steeper than 3' horizontal to 1' vertical (3:1) and all high quality water (HQW) zones shall be provided temporary or permanent stabilization with ground cover as soon as practicable but in any event within seven (7) calendar days from the last land-disturbing activity. All other disturbed areas shall be provided temporary or permanent stabilization with ground cover as soon as practicable but in any event within fourteen (14) calendar days from the last land-disturbing activity.
9. Flocculants will be used to address turbidity issues. The pumps, tanks, hoses and inject systems will be checked for problems or turbid discharges daily.

Approved Construction Plan

	Name	Date
Planning		
Traffic		
Fire		

CITY OF WILMINGTON NORTH CAROLINA
Public Services Engineering Division
APPROVED STORMWATER MANAGEMENT PLAN
Date:_____ Permit #_____
Signed: _____

SYMBOL	DATE	DESCRIPTION	BY
		REVISIONS	

©2012 NORRIS & TUNSTALL

NOTES AND DETAILS
CAROLINA BAY AT AUTUMN HALL PHASE II
630 CAROLINA BAY RD.
AUTUMN HALL TOWN CENTER
WILMINGTON, NORTH CAROLINA 28403

OWNER:
CAROLINA BAY OF WILMINGTON, LLC
BILL SCHOETTELKOTTE
DIRECTOR OF CONSTRUCTION
2334 S. 41ST STREET
WILMINGTON, NC 28403
910 815-3122

NORRIS & TUNSTALL
CONSULTING ENGINEERS, INC.
1127 FLORAL PARKWAY
SUITE 400
WILMINGTON, NC, 28403
PHONE (910) 343-9653
FAX (910) 343-9604
office@nrtteng.com
licence #C-3641

DESIGN DEVELOPMENT

12028

DES.	JST
CKD.	JPN
DRWN.	NKS
DATE	7/19/13

NORTH CAROLINA PROFESSIONAL SEAL 19657 ENGINEER JOHN S. TUNSTALL

C5.2

F:\Projects\2005\05150 Autumn Hall Mixed-Use\05150 Plans\dwg\05150.master-22.dwg, 7/18/2013 10:54:57 AM

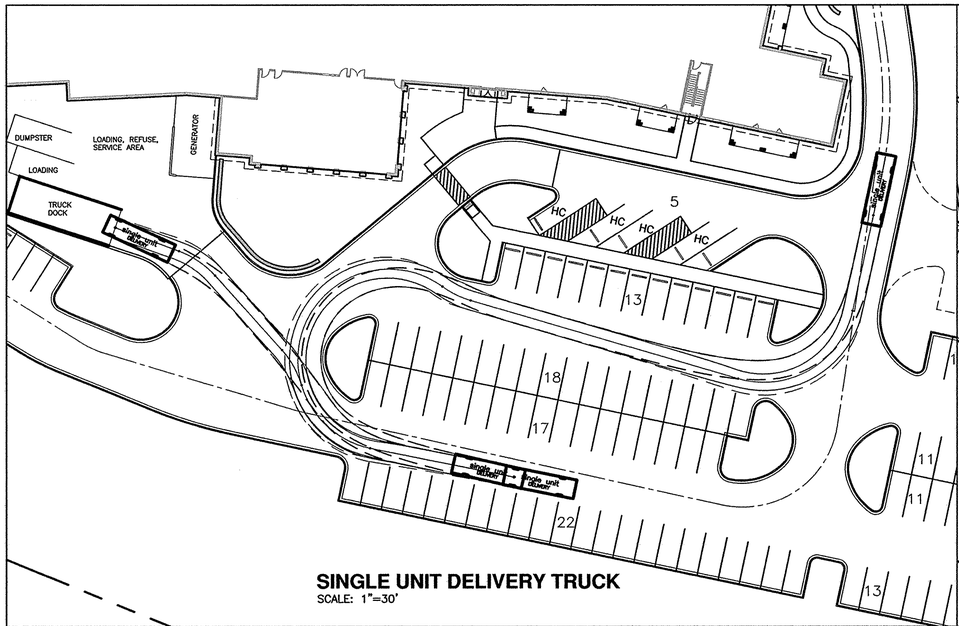

SINGLE UNIT DELIVERY TRUCK
SCALE: 1"=30'

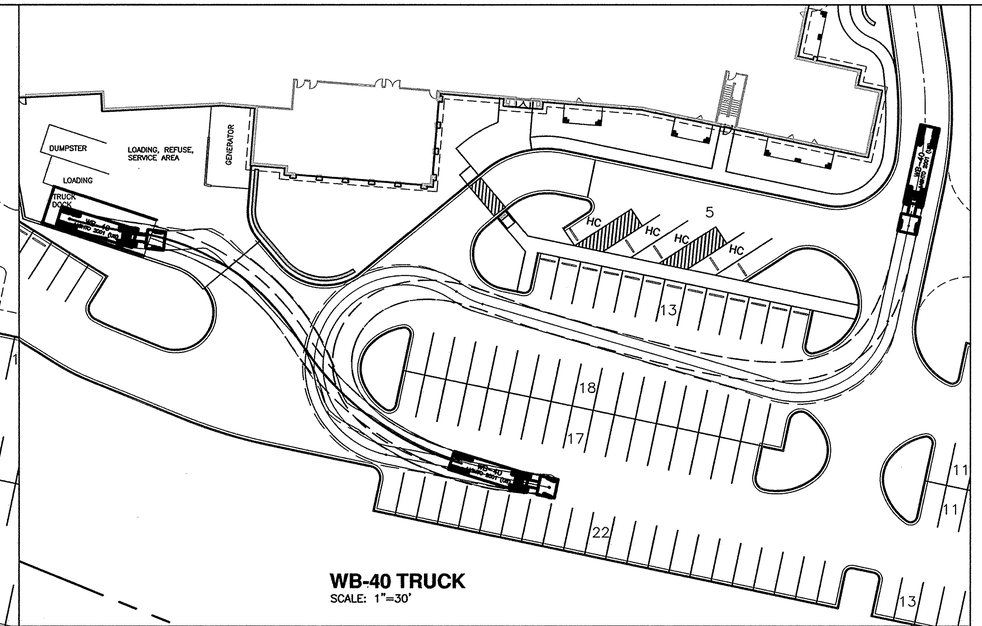

WB-40 TRUCK
SCALE: 1"=30'

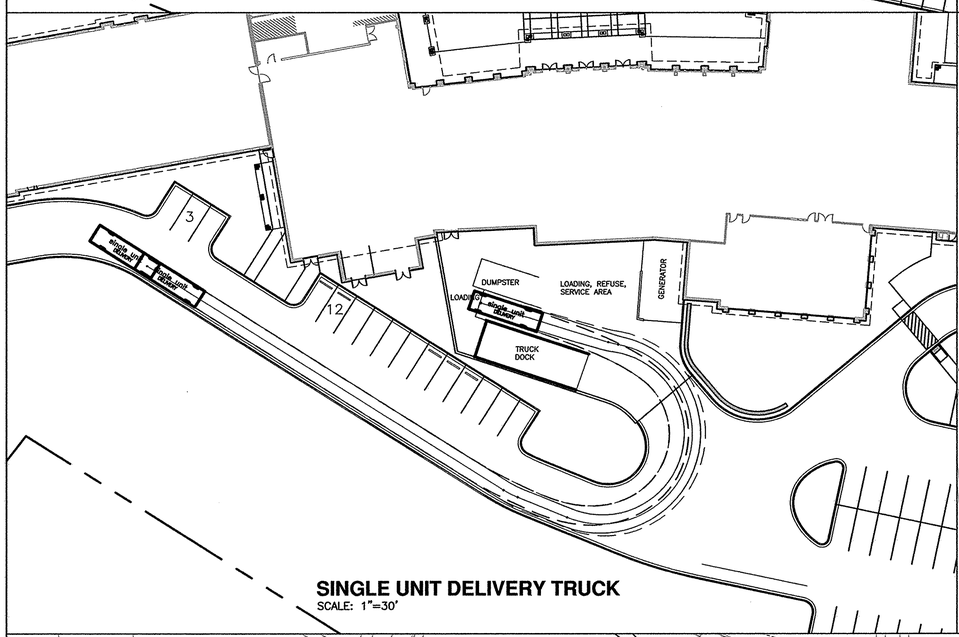

SINGLE UNIT DELIVERY TRUCK
SCALE: 1"=30'

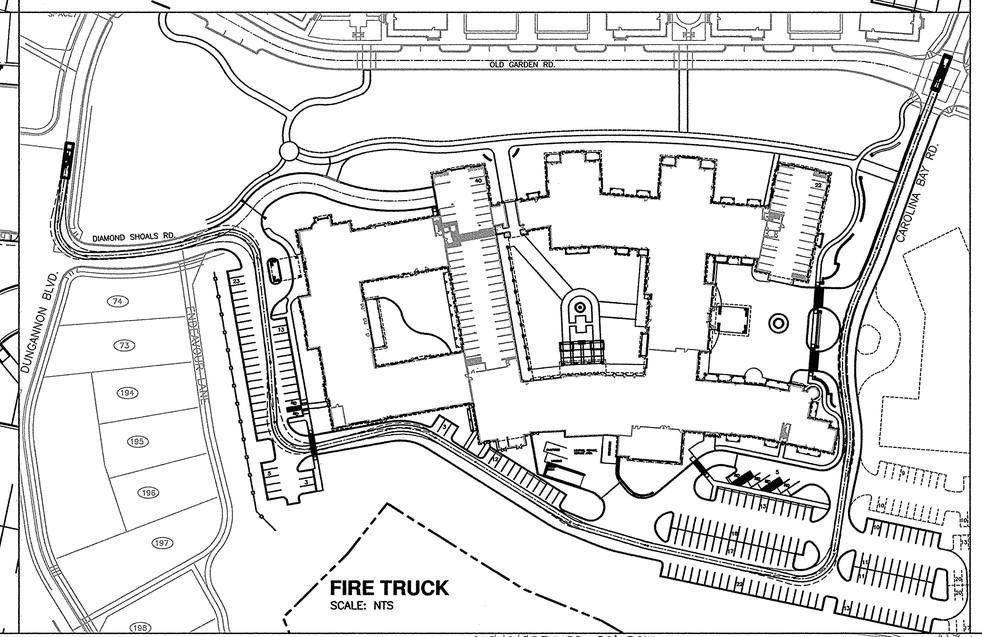

FIRE TRUCK
SCALE: NTS

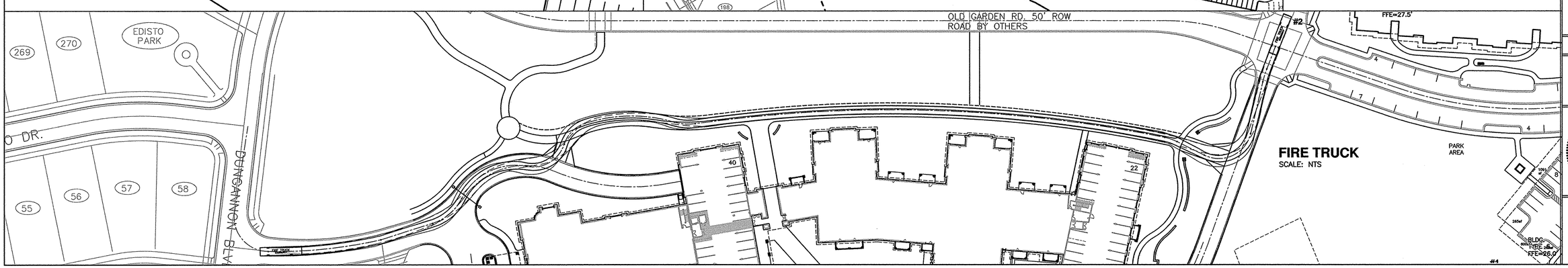

FIRE TRUCK
SCALE: NTS

SYMBOL	DATE	DESCRIPTION	BY
		REVISIONS	

© 2013 NORRIS & TUNSTALL

TRUCK TURN DETAILS
CAROLINA BAY AT AUTUMN HALL PHASE II
630 CAROLINA BAY RD.
AUTUMN HALL TOWN CENTER
WILMINGTON, NORTH CAROLINA 28403

OWNER:
CAROLINA BAY OF WILMINGTON, LLC
BILL SCHOETTELKOTTE
DIRECTOR OF CONSTRUCTION
2334 S. 41ST STREET
WILMINGTON, NC 28403
910 815-3122

NORRIS & TUNSTALL
CONSULTING ENGINEERS, INC.
1127 FLORAL PARKWAY
SUITE 400
WILMINGTON, NC, 28403
PHONE (910) 343-9653
FAX (910) 343-9604
office@nteng.com
licence #C-3641

12028

DES.	JST
CKD.	JPN
DRWN.	NKS
DATE	7/19/13

NORTH CAROLINA PROFESSIONAL SEAL 19851 ENGINEER JOHN S. TUNSTALL

C5.3

MX ZONE

MX ZONE

MX ZONE

MX ZONE

MX ZONE

MX ZONE

MX

R-15

R-15

R-15

R-15

R-15

R-15

Kr
SOIL

Ly
SOIL

Kr
SOIL

OLD GARDEN ROAD

DUNCANNON BLVD.

CAROLINA BAY RD.

DIAMOND SHOALS RD.
(60' PUBLIC R/W)

ENDEAVOUR LANE

ZONING BOUNDARY

SOIL DELINEATION LINE

WATERS OF THE US
25' IMPERVIOUS
SETBACK

BLUE LINE STREAM
25' IMPERVIOUS
SETBACK

AUTUMN HALL
TRACT 3-AR2-17.03 ACRES +/-
A PORTION OF
TRACT 3-A
MAP BOOK 52 PAGE 15
AND A PORTION OF TRACT 3B-3B
MAP BOOK 53 PAGES 60-64

AUTUMN HALL
PHASE 1B
MAP BOOK PAGES 96-109

AUTUMN HALL
TRACT 3B-3B
MAP BOOK 53 PAGES 60-64

AUTUMN HALL
TRACT 3-A
MAP BOOK 52 PAGE 15
(REMAINDER PORTION)

AUTUMN HALL
TRACT 3-A
MAP BOOK 52 PAGE 15
(REMAINDER PORTION)

COLLEGE ACRES
SECTION 5
MAP BOOK 23 PAGE 43

For each open utility cut of City streets, a $325 permit shall be required from the City prior to occupancy and/or project acceptance.

Approved Construction Plan

	Name	Date
Planning		
Traffic		
Fire		

LOCATION MAP
NOT TO SCALE

APPLICANT/PREPARER OF PLAN:
NORRIS & TUNSTALL CONSULTING ENGINEERS, INC.
1127 FLORAL PARKWAY SUITE 300 & 400
WILMINGTON, NC, 28403
LICENCE #C-3641

OWNER:
CAROLINA BAY OF WILMINGTON, LLC
BILL SCHOETTELKOTTE
DIRECTOR OF CONSTRUCTION
2334 S. 41ST STREET WILMINGTON,
NC 28403 910 815-3122

SURVEYOR:
MICHAEL UNDERWOOD and ASSOCIATES, PA
3963 MARKET STREET, SUITE C-3
WILMINGTON, NC 28403
PHONE: 910-815-0650
FAX: 910-815-0393
E-MAIL: mua@bzdc.rr.com

SITE DATA

ADDRESS:	630 CAROLINA BAY RD.
PARCEL ID#:	R05000-004-011-000
MAP ID#:	314707.68.8597.000
PARCEL AREA:	17.16 AC
ZONING:	MX/R-15
SOIL TYPE:	Kr: KUREB Ly: LYNN HAVEN FINE SAND
CAMA LAND USE:	WATERSHED RESOURCE PROTECTION
CAMA AEC:	WATERS OF US AND BLUE LINE STREAM SEE PLAN
CONCERVATION RESOURCES OR SETBACKS:	SEE PLAN
HISTORICAL SITE:	NONE
CEMETARY:	NONE
FORESTED AREA:	SEE PLAN
WETLANDS:	NONE WITHIN SITE AREA
ENDANGERED SPECIES/HABITAT:	NONE REPORTED

NOTE:STORMWATER FLOWS TO BRADLEY CREEK WHICH HAS A NC DENR CLASSIFICATION OF "C" "SW" "HQW"

SCALE: 1" =40'
0 40 80 120

SYMBOL	DATE	DESCRIPTION	BY
		REVISIONS	

©2012 NORRIS & TUNSTALL

SITE INVENTORY PLAN
CAROLINA BAY AT AUTUMN HALL PHASE II
630 CAROLINA BAY RD.
AUTUMN HALL TOWN CENTER
WILMINGTON, NORTH CAROLINA 28403

OWNER:
CAROLINA BAY OF WILMINGTON, LLC
BILL SCHOETTELKOTTE
DIRECTOR OF CONSTRUCTION
2334 S. 41ST STREET
WILMINGTON, NC 28403
910 815-3122

NORRIS & TUNSTALL
CONSULTING ENGINEERS, INC.
1127 FLORAL PARKWAY
SUITE 400
WILMINGTON, NC, 28403
PHONE (910) 343-9653
FAX (910) 343-9604
office@nteng.com
licence #C-3641

DESIGN DEVELOPMENT

12028

DES.	JST
CKD.	JPN
DRWN.	NKS
DATE	7/19/13

NORTH CAROLINA PROFESSIONAL SEAL 19851 ENGINEER JOHN P. TUNSTALL

I.1

F:\Projects\2005\05150 Autumn Hall Multi-Use\05150 Plans\dwg\05150.master-22.dwg, 7/16/2013 9:46:57 AM

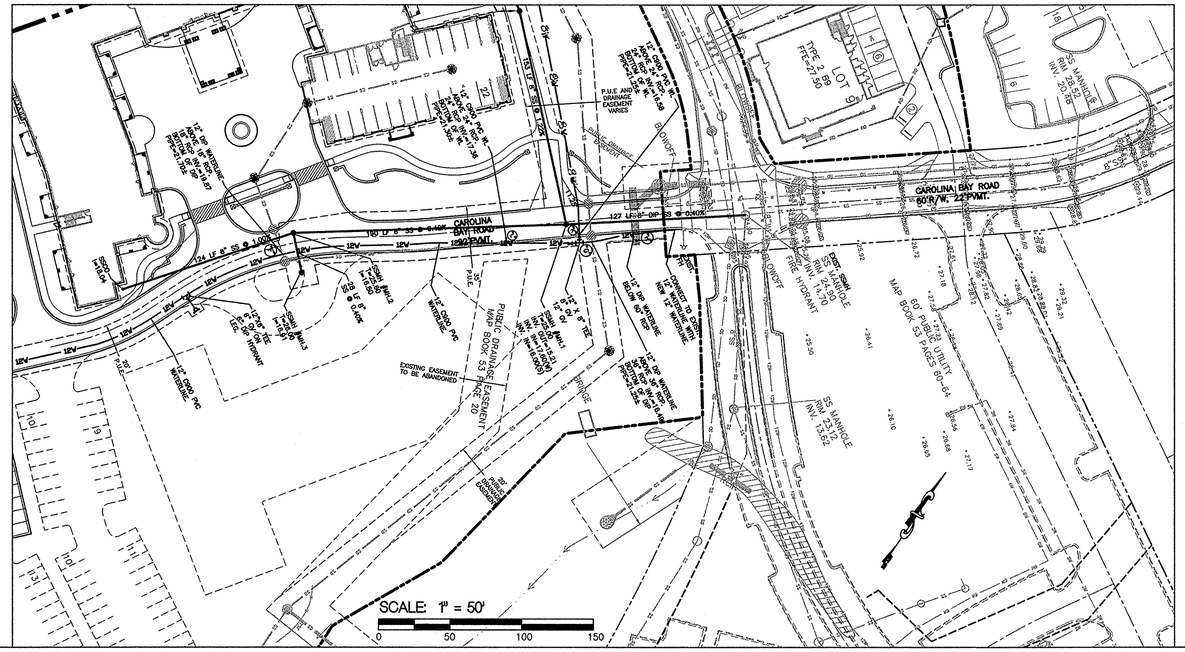

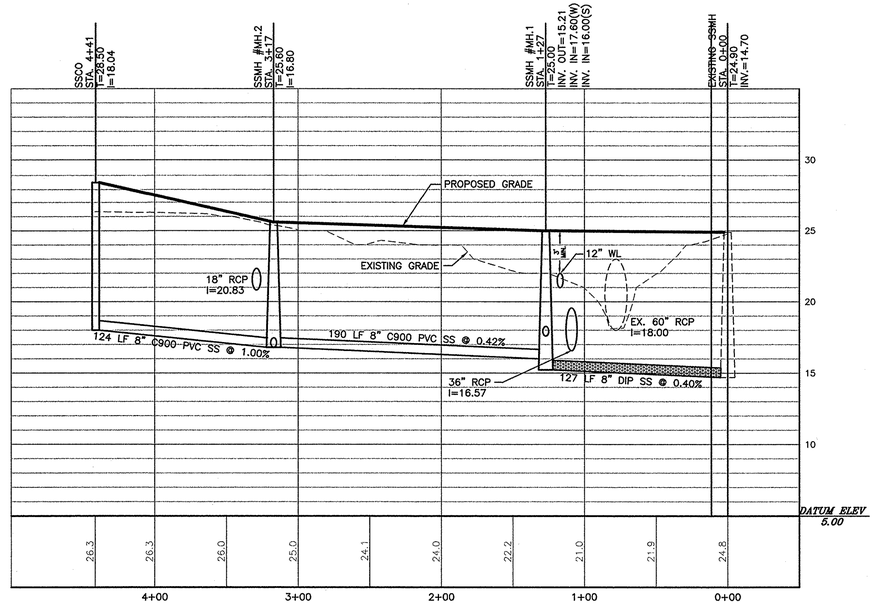

LINE 1

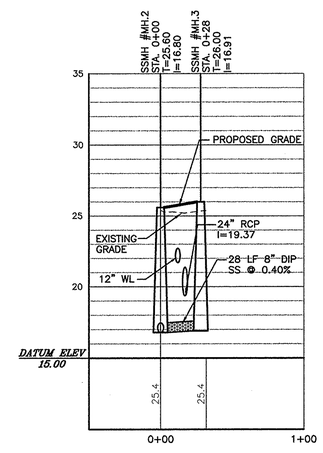

For each open utility cut of City streets, a $325 permit shall be required from the City prior to occupancy and/or project acceptance.

Approved Construction Plan

	Name	Date
Planning		
Traffic		
Fire		

NCDENR PWSS WATER PERMIT #:	
WATER CAPACITY:	GPD
DWQ SEWER PERMIT #:	
SEWER CAPACITY:	GPD
SEWER SHED # AND PLANT:	
SEWER TO FLOW THROUGH NEI:	YES or NO (CIRCLE ONE)

UTILITY NOTES:

1. LATERAL SEPARATION OF SEWERS AND WATER MAINS. WATER MAINS SHALL BE LAID AT LEAST 10 FEET LATERALLY FROM EXISTING OR PROPOSED SEWERS, UNLESS LOCAL CONDITIONS OR BARRIERS PREVENT A 10 FOOT LATERAL SEPARATION-IN WHICH CASE:

(A) THE WATER MAIN IS LAID IN A SEPARATE TRENCH, WITH THE ELEVATION OF THE BOTTOM OF THE WATER MAIN AT LEAST 18 INCHES ABOVE THE TOP OF THE SEWER; OR

(B) THE WATER MAIN IS LAID IN THE SAME TRENCH AS THE SEWER WITH THE WATER MAIN LOCATED AT ONE SIDE ON A BENCH OF UNDISTURBED EARTH, AND WITH THE ELEVATION OF THE BOTTOM OF THE WATER MAIN AT LEAST 18 INCHES ABOVE THE TOP OF THE SEWER.

2. CROSSING A WATER MAIN OVER A SEWER. WHENEVER IT IS NECESSARY FOR A WATER MAIN TO CROSS OVER A SEWER, THE WATER MAIN SHALL BE LAID AT SUCH AN ELEVATION THAT THE BOTTOM OF THE WATER MAIN IS AT LEAST 18 INCHES ABOVE THE TOP OF THE SEWER, UNLESS LOCAL CONDITIONS OR BARRIERS PREVENT AN 18 INCH VERTICAL SEPARATION-IN WHICH CASE BOTH THE WATER MAIN AND THE SEWER SHALL BE CONSTRUCTED OF FERROUS MATERIALS AND WITH JOINTS THAT ARE EQUIVALENT TO WATER MAIN STANDARDS FOR A DISTANCE OF 10 FEET ON EACH SIDE OF THE POINT OF CROSSING.

3. CROSSING A WATER MAIN UNDER A SEWER. WHENEVER IT IS NECESSARY FOR A WATER MAIN TO CROSS UNDER A SEWER, BOTH THE WATER MAIN AND THE SEWER SHALL BE CONSTRUCTED OF FERROUS MATERIALS AND WITH JOINTS EQUIVALENT TO WATER MAIN STANDARDS FOR A DISTANCE OF 10 FEET ON EACH SIDE OF THE POINT OF CROSSING. A SECTION OF WATER MAIN PIPE SHALL BE CENTERED AT THE POINT OF CROSSING.

4. THE FOLLOWING SHOULD BE FOLLOWED IN THE CASES OF GRAVITY SEWER UNDER STORM DRAIN:
- LESS THAN 12" OF SEPARATION BETWEEN STORM DRAIN AND GRAVITY SEWER, STORM DRAIN MUST BE BRIDGED.
- 12" TO 24" OF SEPARATION BETWEEN STORM DRAIN AND GRAVITY SEWER, GRAVITY SEWER CAN BE DIP OR STORM DRAIN CAN BE BRIDGED.
- GREATER THAN 24" OF SEPARATION BETWEEN STORM DRAIN AND GRAVITY SEWER NO BRIDGING OR DIP REQUIRED.

5. RESTRAINING/BLOCKING: THE PLUGS, CAPS, TEES AND BENDS DEFLECTING 22-1/2 DEGREES OR MORE EITHER VERTICALLY OR HORIZONTALLY ON WATER LINES 6 INCHES IN DIAMETER OF LARGER SHALL BE PROVIDED WITH THRUST BLOCKING OF "MEGALUG" RETAINER GLAND AT EACH JOINT, INSTALLED PER MANUFACTURER'S REQUIREMENTS.

CFPUA STANDARD NOTES:

1. SEWER GUARDS REQUIRED AT ALL MANHOLES. STAINLESS STEEL SEWER GUARDS REQUIRED AT MANHOLES LOCATED IN TRAFFIC AREAS.
2. WELLS IN CONFLICT ARE TO BE RELOCATED.
3. SERVICES SHALL BE PERPENDICULAR TO MAIN AND TERMINATE AT RIGHT OF WAY LINE. SERVICES IN CUL-DE-SAC ARE REQUIRED TO BE PERPENDICULAR, OR MUST ORIGINATE IN MANHOLE AND TERMINATE AT RIGHT OF WAY LINE.
4. ALL SERVICES TYING INTO DUCTILE IRON MAINS SHALL BE CONSTRUCTED OF CLASS 50, D.I.P. 401 PROTECTO CERAMIC LINED.
5. 10' UTILITIES EASEMENT IS PROVIDED ALONG THE FRONTAGE OF ALL LOTS AND AS SHOWN.
6. NO FLEXIBLE COUPLINGS SHALL BE USED.
7. ALL WATER AND SEWER MAINS OUTSIDE ROW WILL REQUIRE A UTILITY EASEMENT.
8. WATER METERS AND FIRST CLEAN-OUTS SHALL BE 18" MIN. INSIDE ROW/EASEMENT AS PER CFPUA DETAILS.

HORIZ. 1" = 50'
VERT. 1" = 5'

REV NO.	DESCRIPTION	DATE
	REVISIONS	

NORTH CAROLINA PROFESSIONAL SEAL 19851 ENGINEER JOHN S. TUNSTALL

Cape Fear Public Utility Authority
Stewardship. Sustainability. Service.

NORRIS & TUNSTALL
CONSULTING ENGINEERS, INC.
1127 FLORAL PARKWAY
SUITE 400
WILMINGTON, NC, 28403
PHONE (910) 343-9653
FAX (910) 343-9604
licence #C-0220

SANITARY SEWER PLAN AND PROFILE
CAROLINA BAY AT AUTUMN HALL PHII
630 CAROLINA BAY DR.
WILMINGTON, N. C.

DATE:	7/19/13
SCALE:	1" = 50' 1" = 5'
DRAWN:	NKS
CHECKED:	JST
PROJECT NO:	12028

SHEET NO:
PR1

F:\Projects\2005\05150 Autumn Hall Mall-Usa\05150 Plans\dwg\05150.master(22.dwg, 7/17/2013 7:53:22 AM

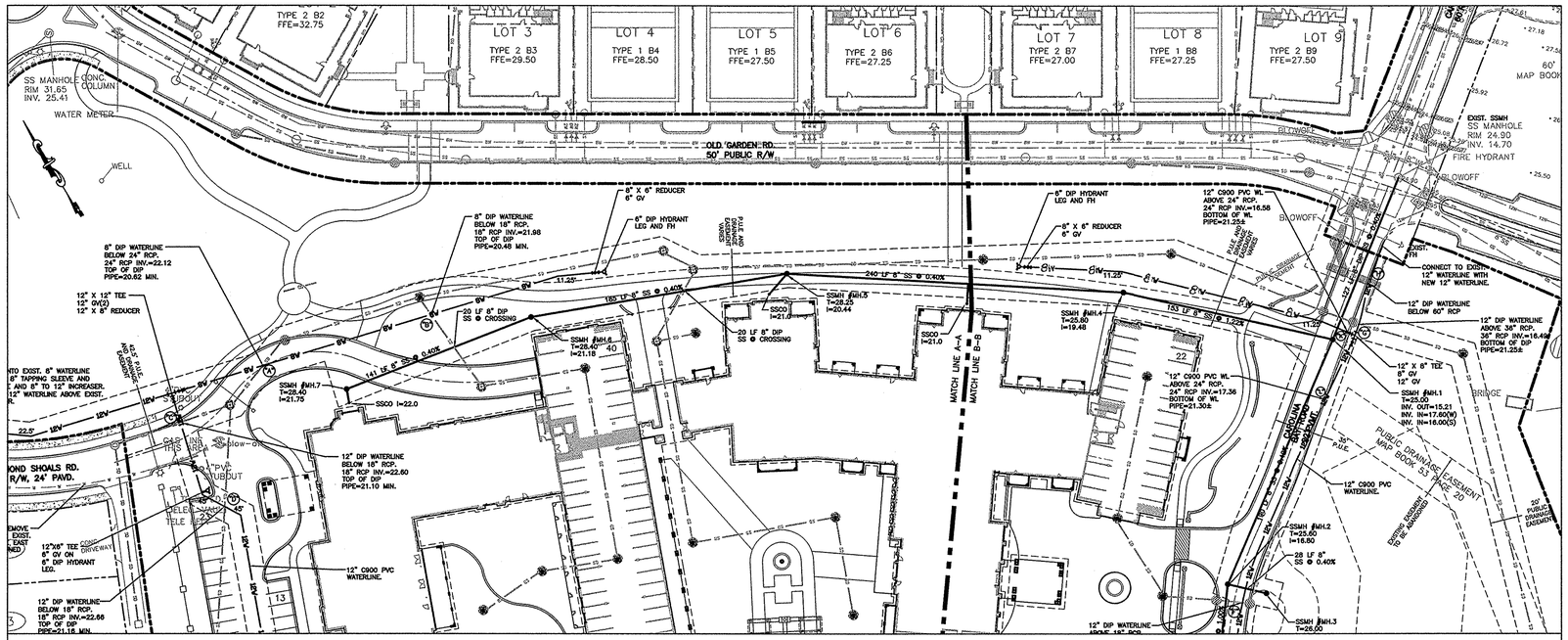

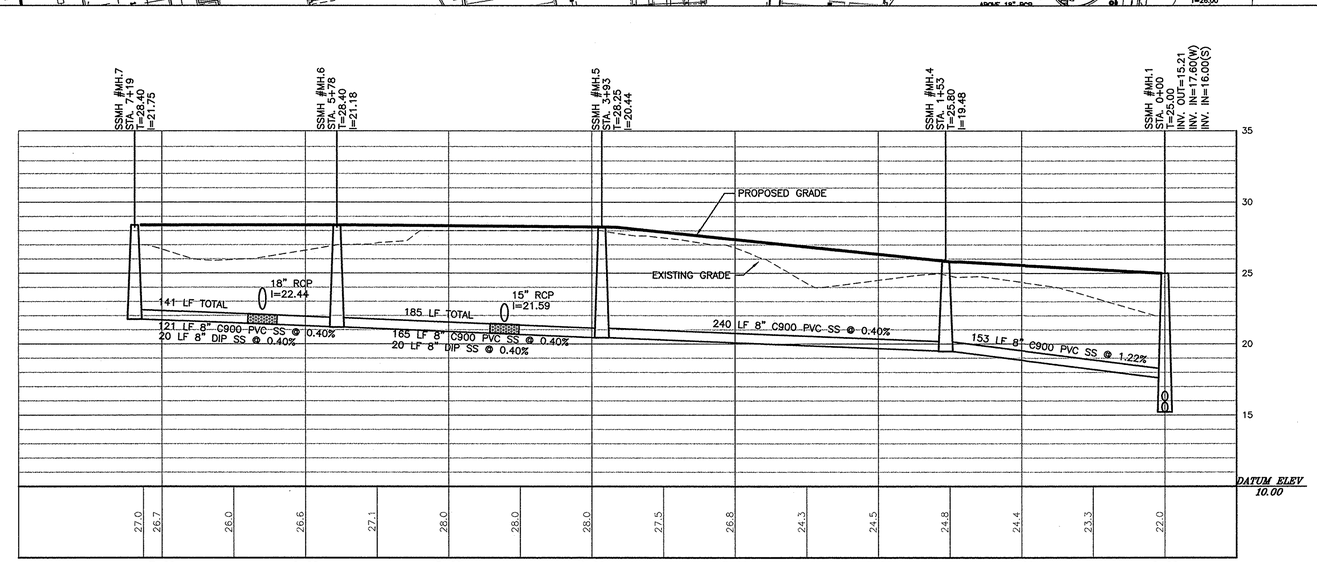

LINE 2

UTILITY NOTES:

1. LATERAL SEPARATION OF SEWERS AND WATER MAINS. WATER MAINS SHALL BE LAID AT LEAST 10 FEET LATERALLY FROM EXISTING OR PROPOSED SEWERS, UNLESS LOCAL CONDITIONS OR BARRIERS PREVENT A 10 FOOT LATERAL SEPARATION—IN WHICH CASE:

(A) THE WATER MAIN IS LAID IN A SEPARATE TRENCH, WITH THE ELEVATION OF THE BOTTOM OF THE WATER MAIN AT LEAST 18 INCHES ABOVE THE TOP OF THE SEWER; OR

(B) THE WATER MAIN IS LAID IN THE SAME TRENCH AS THE SEWER WITH THE WATER MAIN LOCATED AT ONE SIDE ON A BENCH OF UNDISTURBED EARTH, AND WITH THE ELEVATION OF THE BOTTOM OF THE WATER MAIN AT LEAST 18 INCHES ABOVE THE TOP OF THE SEWER.

2. CROSSING A WATER MAIN OVER A SEWER. WHENEVER IT IS NECESSARY FOR A WATER MAIN TO CROSS OVER A SEWER, THE WATER MAIN SHALL BE LAID AT SUCH AN ELEVATION THAT THE BOTTOM OF THE WATER MAIN IS AT LEAST 18 INCHES ABOVE THE TOP OF THE SEWER, UNLESS LOCAL CONDITIONS OR BARRIERS PREVENT AN 18 INCH VERTICAL SEPARATION—IN WHICH CASE BOTH THE WATER MAIN AND THE SEWER SHALL BE CONSTRUCTED OF FERROUS MATERIALS AND WITH JOINTS THAT ARE EQUIVALENT TO WATER MAIN STANDARDS FOR A DISTANCE OF 10 FEET ON EACH SIDE OF THE POINT OF CROSSING.

3. CROSSING A WATER MAIN UNDER A SEWER. WHENEVER IT IS NECESSARY FOR A WATER MAIN TO CROSS UNDER A SEWER, BOTH THE WATER MAIN AND THE SEWER SHALL BE CONSTRUCTED OF FERROUS MATERIALS AND WITH JOINTS EQUIVALENT TO WATER MAIN STANDARDS FOR A DISTANCE OF 10 FEET ON EACH SIDE OF THE POINT OF CROSSING. A SECTION OF WATER MAIN PIPE SHALL BE CENTERED AT THE POINT OF CROSSING.

4. THE FOLLOWING SHOULD BE FOLLOWED IN THE CASES OF GRAVITY SEWER UNDER STORM DRAIN:
- LESS THAN 12" OF SEPARATION BETWEEN STORM DRAIN AND GRAVITY SEWER, STORM DRAIN MUST BE BRIDGED.
- 12" TO 24" OF SEPARATION BETWEEN STORM DRAIN AND GRAVITY SEWER, GRAVITY SEWER CAN BE DIP OR STORM DRAIN CAN BE BRIDGED.
- GREATER THAN 24" OF SEPARATION BETWEEN STORM DRAIN AND GRAVITY SEWER NO BRIDGING OR DIP REQUIRED.

5. RESTRAINING/BLOCKING: THE PLUGS, CAPS, TEES AND BENDS DEFLECTING 22-1/2 DEGREES OR MORE EITHER VERTICALLY OR HORIZONTALLY ON WATER LINES 6 INCHES IN DIAMETER OF LARGER SHALL BE PROVIDED WITH THRUST BLOCKING OF "MEGALUG" RETAINER GLAND AT EACH JOINT, INSTALLED PER MANUFACTURER'S REQUIREMENTS.

CFPUA STANDARD NOTES:

1. SEWER GUARDS REQUIRED AT ALL MANHOLES. STAINLESS STEEL SEWER GUARDS REQUIRED AT MANHOLES LOCATED IN TRAFFIC AREAS.
2. WELLS IN CONFLICT ARE TO BE RELOCATED.
3. SERVICES SHALL BE PERPENDICULAR TO MAIN AND TERMINATE AT RIGHT OF WAY LINE. SERVICES IN CUL-DE-SAC ARE REQUIRED TO BE PERPENDICULAR, OR MUST ORIGINATE IN MANHOLE AND TERMINATE AT RIGHT OF WAY LINE.
4. ALL SERVICES TYING INTO DUCTILE IRON MAINS SHALL BE CONSTRUCTED OF CLASS 50, D.I.P. 401 PROTECTO CERAMIC LINED.
5. 10' UTILITIES EASEMENT IS PROVIDED ALONG THE FRONTAGE OF ALL LOTS AND AS SHOWN.
6. NO FLEXIBLE COUPLINGS SHALL BE USED.
7. ALL WATER AND SEWER MAINS OUTSIDE ROW WILL REQUIRE A UTILITY EASEMENT.
8. WATER METERS AND FIRST CLEAN-OUTS SHALL BE 18" MIN. INSIDE ROW/EASEMENT AS PER CFPUA DETAILS.

For each open utility cut of City streets, a $325 permit shall be required from the City prior to occupancy and/or project acceptance.

Approved Construction Plan

	Name	Date
Planning		
Traffic		
Fire		

NCDENR PWSS WATER PERMIT #:	
WATER CAPACITY:	/ GPD
DWQ SEWER PERMIT #:	
SEWER CAPACITY:	GPD
SEWER SHED # AND PLANT:	
SEWER TO FLOW THROUGH NEI:	YES or NO (CIRCLE ONE)

HORIZ. 1" = 50'
VERT. 1" = 5'

REV NO.	DESCRIPTION	DATE
	REVISIONS	

NORTH CAROLINA PROFESSIONAL SEAL 19851 ENGINEER JOHN S. TUNSTALL

Cape Fear Public Utility Authority
Stewardship. Sustainability. Service.

NORRIS & TUNSTALL
CONSULTING ENGINEERS, INC.
1127 FLORAL PARKWAY
SUITE 400
WILMINGTON, NC, 28403
PHONE (910) 343-9653
FAX (910) 343-9604
licence #C-0520

SANITARY SEWER PLAN AND PROFILE
CAROLINA BAY AT AUTUMN HALL PHII
630 CAROLINA BAY DR.
WILMINGTON, N. C.

DATE:	7/19/13
SCALE:	1" = 50' 1" = 5'
DRAWN:	NKS
CHECKED:	JST
PROJECT NO:	12028

SHEET NO:
PR2

F:\Projects\2005\05150 Autumn Hall Mul-Use\05150 Plans\dwg\05150.master.22.dwg, 7/17/2013 7:53:52 AM