CITY OF WILMINGTON FIRE DEPARTMENT

FIRE STATION No. 3

WILMINGTON, NORTH CAROLINA

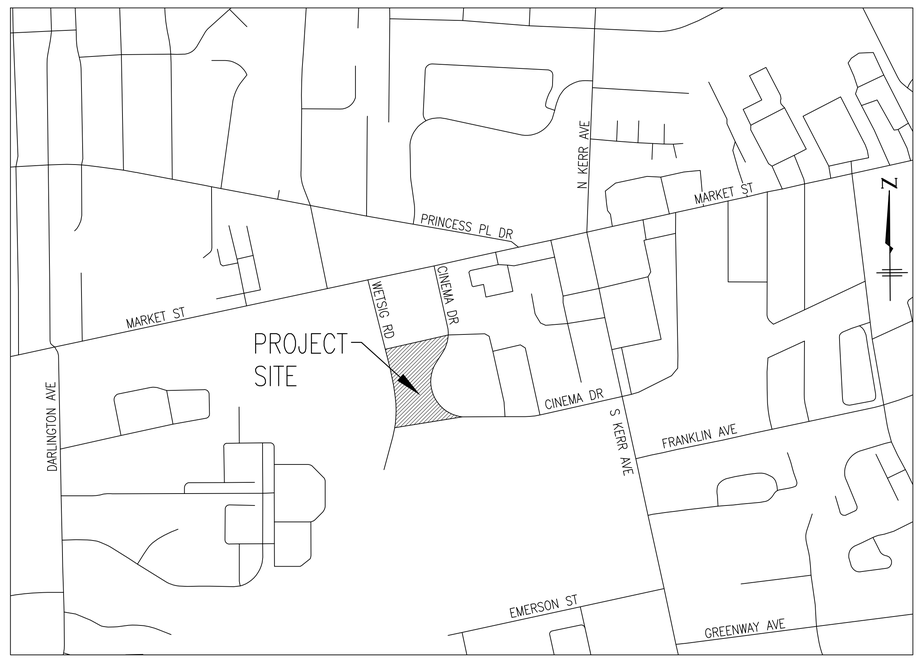

VICINITY MAP

0 500 1000
250 750

SCALE: 1"=500'

BECKER MORGAN GROUP

ARCHITECTURE
PLANNING

Wilmington, NC
3205 Randall Parkway, Suite 211
Wilmington, NC 28403
910.341.7600

Salisbury, MD
312 West Main St. Suite 300
Salisbury, MD 21801
410.546.9100

Dover, DE
309 S Governors Ave
Dover, DE 19904
302.734.7950

www.beckermorgan.com

CATLIN
Engineers and Scientists

220 Old Dairy Road
Wilmington, NC 28405

Corporate Licensure No. for
Engineering Services C-0585

PROJECT TITLE

CITY OF WILMINGTON FIRE DEPARTMENT

FIRE STATION No. 3
114 CINEMA DRIVE
WILMINGTON, NC 28403

SHEET TITLE

COVER SHEET

ISSUE BLOCK

MARK	DATE	DESCRIPTION
	X	X

PROJECT NO:	2012169.00
DATE:	8/14/2013
SCALE:	
DRAWN BY: BLM, DSL	PROJ MGR: GMJ

GI-001

COPYRIGHT © 2013

LEGEND

EXISTING	NEW
(EI*) EXISTING IRON *PIPE/*ROD/*POINT	
(MGF) MAG NAIL FOUND	
(RBS) REBAR SET	
(ECM) EXISTING CONCRETE MONUMENT	
R/W EXISTING RIGHT-OF-WAY MONUMENT	
NCGS EXISTING NCGS MONUMENT	
WM WATER METER	
WV WATER VALVE	
FIRE HYDRANT	
FDC FIRE DEPARTMENT CONNECTION	
ICV IRRIGATION CONTROL VALVE	
W WATER MANHOLE	
W WELL (AS NOTED)	
ARV AIR RELEASE VALVE	
BO BLOW-OFF VALVE	
D STORM DRAIN MANHOLE	
CATCH BASIN	
DROP / YARD INLET	
FLARED END SECTION	
S SEWER MANHOLE	S
SEWER CLEAN-OUT	
UTILITY POLE	
GUY WIRE ANCHOR	
ELC ELECTRIC PEDESTAL	
ELECTRIC METER	
LIGHT / LIGHT POLE	
E ELECTRIC MANHOLE	
FO FIBER OPTIC MARKER	
TEL TELEPHONE PEDESTAL	
T TELEPHONE MANHOLE / VAULT	
GV GAS METER	
GAS VALVE	
GM GAS MARKER	
MB MAIL BOX	
SIGN	
BOLLARD	
U UTILITY MANHOLE	
BORE BORE HOLE LOCATION	
∘ 34.3 GROUND SHOT ELEVATION	
BENCHMARK	
LIMITS OF DISTURBANCE	LOD
24.20 + SPOT SHOT ELEVATION	24.20 +
MATCH GRADE	MG +
OAK	
SWEET GUM	
PINE	
CYPRESS\CEDAR	
MAGNOLIA	
MAPLE	

EXISTING	NEW
SURVEYED LINES (BOUNDARY)	
LINES PER RECORD DATA	
LINES NOT SURVEYED (ADJOINERS)	
RIGHT-OF-WAY FENCE	
FENCE	
CENTER LINE OF ROAD	
BREAKLINE	
STORM PIPE	
OHE OVERHEAD ELECTRIC	
32 MINOR CONTOUR WITH ELEVATION	32
30 MAJOR CONTOUR WITH ELEVATION	30
RIPRAP	
T PAINT MARK (AT&T)	
TEL PAINT MARK (TELECOMMUNICATION)	

GENERAL NOTES

1. THE CITY HAS MADE ALL POSSIBLE ATTEMPTS TO LOCATE EXISTING UTILITIES. IT IS THE CONTRACTOR'S RESPONSIBILITY TO FIELD-VERIFY THE LOCATIONS OF ALL UTILITIES PRIOR TO CONSTRUCTION BY OBSERVATION, ELECTRONIC DEVICES, HAND DIGGING AND PERSONAL CONTACT WITH THE UTILITY COMPANIES. NOTIFY THE CITY OF ANY CONFLICTS. ANY DAMAGE TO UTILITIES INCURRED DURING CONSTRUCTION IS THE RESPONSIBILITY OF THE CONTRACTOR AND WILL BE REPAIRED AT THE CONTRACTOR'S EXPENSE. CONTRACTOR IS RESPONSIBLE FOR FINES OR LOST SERVICE REVENUE. CONTACT "CAROLINA ONE CALL" (1-800-632-4949) AND AFFECTED UTILITY OWNES.
2. THE CONTRACTOR SHALL VISIT THE SITE AND BECOME FAMILIARIZED WITH EXISTING CONDITIONS BOTH ON AND IMMEDIATELY ADJACENT TO THE SITE.
3. MUCKING: CONTRACTOR SHALL COORDINATE WITH CITY REPRESENTATIVES AND THEIR GEOTECHNICAL REPRESENTATIVE TO COORDINATE REMOVAL OF ANY SOFT AREAS.
4. DISPOSAL: CLEARED, GRUBBED, STRIPPED OR OTHER WASTE MATERIAL SHALL BE REMOVED FROM SITE AND DISPOSED OF IN A PROPERLY PERMITTED FACILITY.
5. MAINTAIN EROSION AND SEDIMENT CONTROL PROCEDURES DURING THE ENTIRE CONSTRUCTION PERIOD. CONTROL DEBRIS AND LOOSE SOIL ON ADJACENT STREETS THROUGH DAILY CLEANING.
6. THE CONTRACTOR SHALL BE RESPONSIBLE TO COORDINATE DISCONNECTION/RECONNECTION AND/OR THE RELOCATION OF ALL EXISTING UTILITIES WITH UTILITY OWNER.
7. THE CONTRACTOR SHALL FIELD VERIFY ALL DIMENSIONS AT THE SITE. FURTHERMORE THE CONTRACTOR SHALL REPORT ALL DISCREPANCIES OR QUESTIONS TO THE CITY PRIOR TO INSTALLATION.
8. ALL PAVEMENT BASE AND SUBGRADE SHALL CONFORM TO NCDOT STANDARDS INCLUDING WORKMANSHIP, MATERIALS AND EQUIPMENT AND IN ACCORDANCE WITH THE SPECIFICATIONS. APPROPRIATE BARRICADES, SIGNS, LIGHTS OR OTHER TRAFFIC CONTROL DEVICES SHALL BE PROVIDED IN ACCORDANCE WITH NCDOT AND MUTCD STANDARDS.
9. TOPSOIL SHALL BE STOCKPILED SEPARATE FROM EXCAVATED MATERIAL, ONSITE AND READY FOR REUSE.
10. EXISTING TOPOGRAPHY, STRUCTURES, UTILITIES AND SITE FEATURES ARE GENERALLY SHOWN SCREENED AND/OR LIGHT LINES. NEW FINISH GRADE, STRUCTURES, UTILITIES AND SITE FEATURES ARE GENERALLY SHOWN AS HEAVY LINES.

GEOTECHNICAL NOTES:

1. GEOTECHNICAL SUBSURFACE CONDITIONS OF THIS PROJECT CAN BE FOUND IN THE GEOTECHNICAL REPORT PREPARED BY CATLIN ENGINEERS AND SCIENTISTS DATED AUGUST 2013.
2. INFORMATION CONTAINED IN THE GEOTECHNICAL REPORT IS LIMITED, BASED ON DATA OBTAINED FROM BORING LOGS AND LABORATORY TESTING THAT SHOW SUBSURFACE CONDITIONS ONLY AT THE SPECIFIC LOCATION AND TIME INVESTIGATED AND ONLY TO THE DEPTH PENETRATED. SUBSURFACE CONDITIONS AND GROUNDWATER LEVELS AT OTHER LOCATIONS OR DEPTHS MAY DIFFER FROM CONDITIONS OCCURRING AT INVESTIGATED LOCATIONS. THE PASSAGE OF TIME MAY ALSO RESULT IN CHANGED CONDITIONS AT THESE LOCATIONS. IF, DURING CONSTRUCTION, SUBSURFACE CONDITIONS ARE FOUND TO VARY FROM THOSE DESCRIBED IN THE GEOTECHNICAL REPORT, GEOTECHNICAL RECOMMENDATIONS SHOULD BE RE-EVALUATED.
3. THE GEOTECHNICAL REPORT INCLUDES BOTH FACTUAL AND INTERPRETED INFORMATION. FACTUAL INFORMATION IS DEFINED AS OBJECTIVE DATA BASED ON DIRECT OBSERVATIONS, SUCH AS BORING LOGS AND LABORATORY TESTING RESULTS. INTERPRETED INFORMATION OR GEOTECHNICAL ENGINEERING INTERPRETATION IS BASED ON THE ENGINEERING JUDGMENT, CORRELATION OR EXTRAPOLATION FROM FACTUAL INFORMATION. NO WARRANTIES, EXPLICIT OR IMPLIED, ARE PROVIDED FOR INTERPRETED INFORMATION.

SURVEY NOTE:

1. EXISTING TOPOGRAPHIC SURVEY DATA SHOWN WAS SURVEYED BY ATLANTIC COAST SURVEY, PLLC, WILMINGTON, N.C.. HORIZONTAL REFERENCE DATUM NAD 83. VERTICAL DATUM NAVD 88.

ABBREVIATIONS

BOB	BOTTOM OF BOX
BLDG	BUILDING
CO	CLEAN OUT
CY	CUBIC YARD(S)
CONC	CONCRETE
DB	DEED BOOK
DP	DEEP POINT
E	EXISTING
EIP	EXISTING IRON PIPE
EIPP	EXISTING IRON PIPE (PINCHED TOP)
EIR	EXISTING IRON ROD
EL	ELEVATION
ELV	ELEVATION
EOG	EDGE OF GRAVEL
EOP	EDGE OF PAVEMENT
EVCE	END VERTICAL CURVE ELEVATION
EVCS	END VERTICAL CURVE STATION
EG	EDGE OF GRAVEL
EX	EXISTING
FDC	FIRE DEPARTMENT CONNECTION
FF	FINISHED FLOOR
FO	FIBER OPTIC
GOVT	GOVERNMENT
HH	HANDHOLE
INV	INVERT
LOD	LIMITS OF DISTURBANCE
MB	MAP BOOK / CABINET
MGF	MAG NAIL FOUND
MON	MONUMENT
MP	MAP POINT
N/F	NOW OR FORMERLY
NCGS	NORTH CAROLINA GEODETIC SURVEY
MG	MATCH GRADE
MJ	MECHANICAL JOINT
NCDENR	NORTH CAROLINA DEPARTMENT OF ENVIRONMENTAL AND NATURAL RESOURCES
OICC	OFFICER IN CHARGE OF CONSTRUCTION
PG	PAGE
PC	POINTS OF CURVATURE
PT	POINTS OF TANGENCY
PVC	POINT OF VERTICAL CURVATURE
PVI	POINT OF VERTICAL INTERSECTION
R	RADIUS
RBS	REBAR SET
RCP	REINFORCED CONCRETE PIPE
RDD	RANGE DEVELOPMENT DIVISION
REQD	REQUIRED
ROW	RIGHT OF WAY
SDMH	STORM DRAIN MANHOLE
SSMH	SANITARY SEWER MANHOLE
STA	STATION
TYP	TYPICAL
UNO	UNLESS NOTED OTHERWISE
W/	WITH

BECKER MORGAN GROUP
ARCHITECTURE PLANNING
Wilmington, NC
3205 Randall Parkway, Suite 211
Wilmington, NC 28403
910.341.7600
Salisbury, MD
312 West Main St. Suite 300
Salisbury, MD 21801
410.546.9100
Dover, DE
309 S Governors Ave
Dover, DE 19904
302.734.7950
www.beckermorgan.com

CATLIN Engineers and Scientists
220 Old Dairy Road
Wilmington, NC 28405
Corporate Licensure No. for Engineering Services C-0585

PROJECT TITLE

CITY OF WILMINGTON FIRE DEPARTMENT

FIRE STATION No. 3
114 CINEMA DRIVE
WILMINGTON, NC 28403

SHEET TITLE

GENERAL NOTES, LEGEND AND ABBREVIATIONS

ISSUE BLOCK

MARK	DATE	DESCRIPTION
	X	X

PROJECT NO:	2012169.00
DATE:	8/14/2013
SCALE:	
DRAWN BY: BLM, DSL	PROJ MGR: GMJ

GI-002

COPYRIGHT © 2013

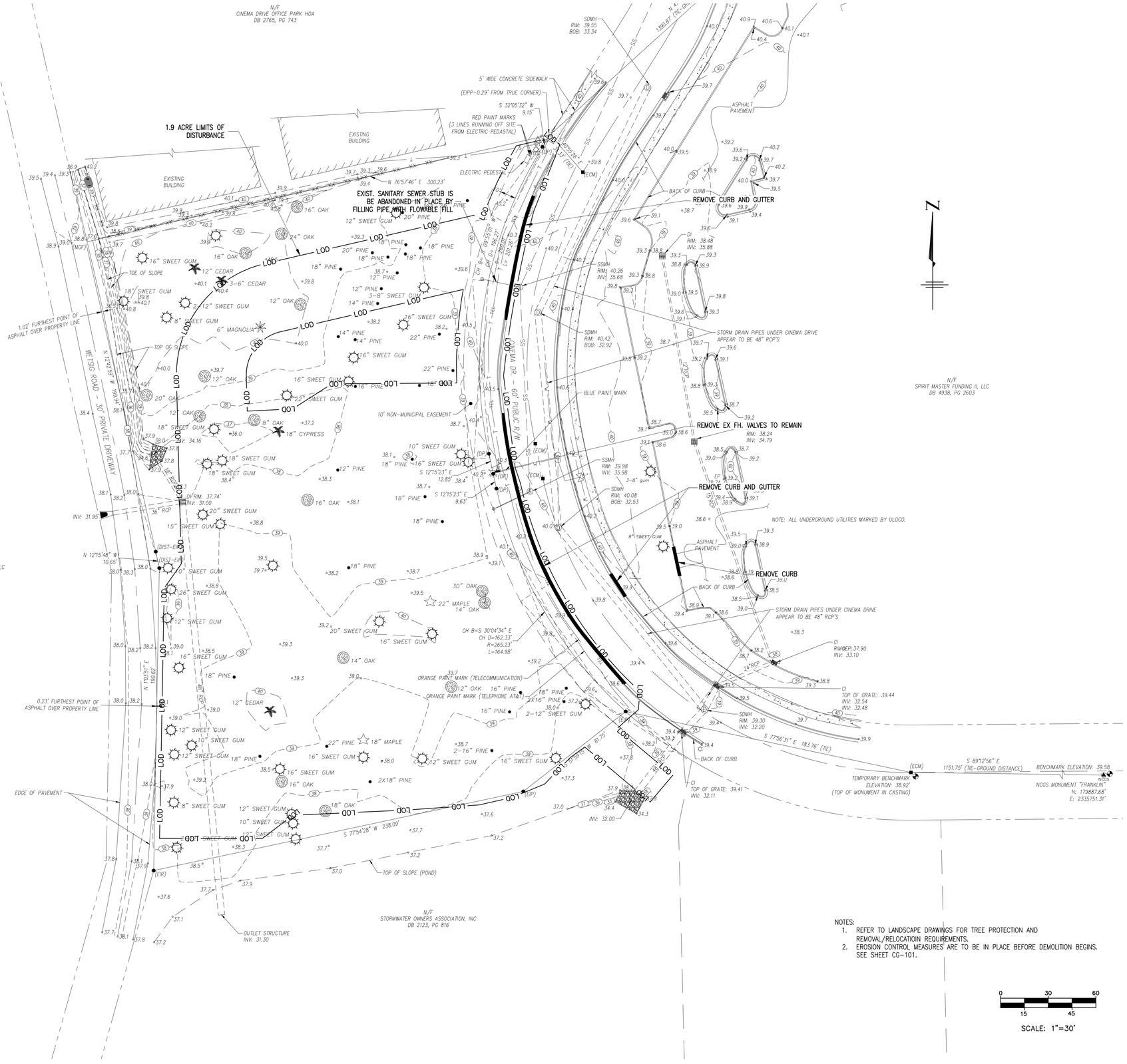

NOTES:

1. REFER TO LANDSCAPE DRAWINGS FOR TREE PROTECTION AND REMOVAL/RELOCATIOIN REQUIREMENTS.
2. EROSION CONTROL MEASURES ARE TO BE IN PLACE BEFORE DEMOLITION BEGINS. SEE SHEET CG-101.

0 30 60
15 45
SCALE: 1"=30'

BECKER MORGAN GROUP
ARCHITECTURE PLANNING
Wilmington, NC
3205 Randall Parkway, Suite 211
Wilmington, NC 28403
910.341.7600
Salisbury, MD
312 West Main St. Suite 300
Salisbury, MD 21801
410.546.9100
Dover, DE
309 S Governors Ave
Dover, DE 19904
302.734.7950
www.beckermorgan.com

CATLIN
Engineers and Scientists
220 Old Dairy Road
Wilmington, NC 28405
Corporate Licensure No. for Engineering Services C-0585

PROJECT TITLE

CITY OF WILMINGTON FIRE DEPARTMENT

FIRE STATION No. 3

114 CINEMA DRIVE
WILMINGTON, NC 28403

SHEET TITLE

EXISTING CONDITIONS AND DEMOLITION PLAN

ISSUE BLOCK

MARK	DATE	DESCRIPTION
	X	X

PROJECT NO:	2012169.00
DATE:	8/14/2013
SCALE:	
DRAWN BY: BLM, DSL	PROJ MGR: GMJ

CD-101

COPYRIGHT © 2013

SITE DATA

AREA = 2.26 ACRES
PIN # R04914-005-021-000
ZONING = RB (REGIONAL BUSINESS)
PRINCIPAL USAGE = FIRE STATION
CAMA LAND USE CLASSIFICATION = URBAN
PROPOSED BUILDING AREA = 14,620 SF
BUILDING HEIGHT = 26'

BUILDING SET BACK REQUIREMENTS
FRONT YARD ..... 25' ..... 55' PROPOSED
REAR YARD ..... 12.5' ..... 62' PROPOSED
SIDE YARD ..... NONE ..... 32' PROPOSED

OFF STREET PARKING REQUIREMENTS
MIN. SPACE SIZE = 8.5' WIDE x 18' LONG
NUMBER OF SPACES REQUIRED
PUBLIC MEETING ROOM
1 SPACE PER 4 SEATS
(72 SEATS / 4) = 18 SPACES
FIRE STATION CREW
1 SPACE PER 2 PERSONS
(36 / 2) = 18 SPACES

TOTAL PARKING SPACES REQUIRED = 36

SPACES PROVIDED: 23 -9x18' SPACES
12 - EXISTING SHARED SPACES
+ 2 - HANDICAPPED SPACES
37 TOTAL SPACES

COVERAGE (PROPOSED)
BUILDING ROOF LINE ..... 14,620 SF = 14.85%
CONC. ..... 3,152 SF
ASPHALT AND CURB ..... 27,879 SF
TOTAL ..... 45,651 SF = 46.37%

ALLOWABLE IMPERVIOUS PER NCDENR PERMIT SW960321 = 90%

WATER SYSTEM OWNER = CAPE FEAR PUBLIC UTILITY AUTHORITY
CURRENT WATER USE = 0 GPD
PROPOSED WATER USE = 1,200 GPD

SANITARY SEWER OWNER = CAPE FEAR PUBLIC UTILITY ATHORITY
CURRENT SEWER USE = 0 GPD
PROPOSED SEWER USE = 1,200 GPD

ROLL OUTS WILL BE USED FOR SOLID WASTE

NO WETLANDS HAVE BEEN IDENTIFIED WITHIN THE PROJECT AREA
NO HISTORIC OR ARCHAEOLOGICAL SITES HAVE BEEN IDENTIFIED WITHIN THE PROJECT AREA

PROJECT SITE'S USGS SOIL TYPES = (Se) SEAGATE FINE SAND

SEE LANDSCAPE PLAN FOR LANDSCAPE REQUIREMENTS

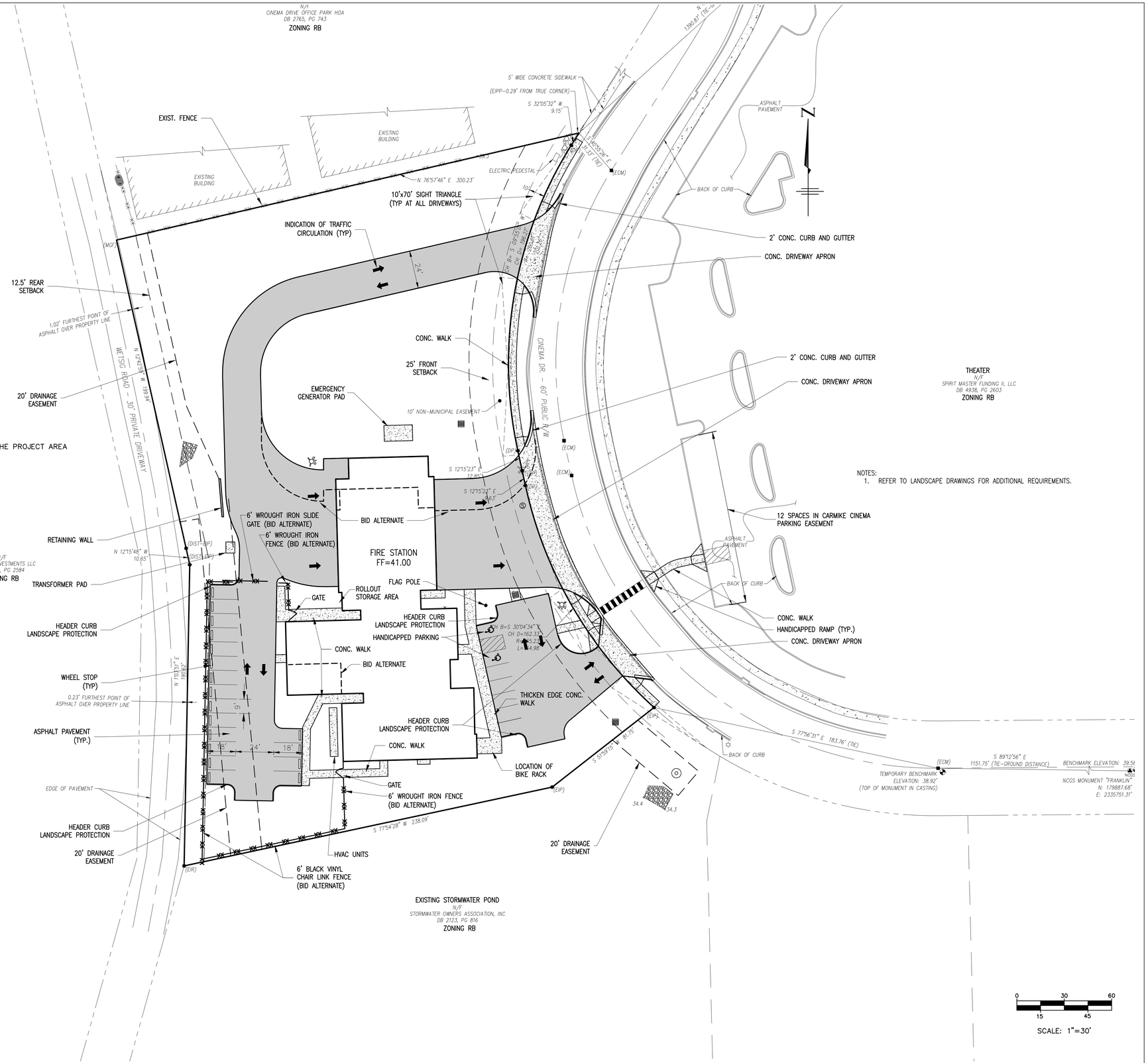

NOTES:
1. REFER TO LANDSCAPE DRAWINGS FOR ADDITIONAL REQUIREMENTS.

BECKER MORGAN GROUP
ARCHITECTURE PLANNING
Wilmington, NC
3205 Randall Parkway, Suite 211
Wilmington, NC 28403
910.341.7600
Salisbury, MD
312 West Main St. Suite 300
Salisbury, MD 21801
410.546.9100
Dover, DE
309 S Governors Ave
Dover, DE 19904
302.734.7950
www.beckermorgan.com

CATLIN
Engineers and Scientists
220 Old Dairy Road
Wilmington, NC 28405
Corporate Licensure No. for Engineering Services C-0585

PROJECT TITLE
CITY OF WILMINGTON FIRE DEPARTMENT
FIRE STATION No. 3
114 CINEMA DRIVE
WILMINGTON, NC 28403

SHEET TITLE
SITE PLAN

ISSUE BLOCK

MARK	DATE	DESCRIPTION
	X	X

PROJECT NO:	2012169.00
DATE:	8/14/2013
SCALE:	
DRAWN BY: BLM, DSL	PROJ MGR: GMJ

CS-101

COPYRIGHT © 2013

EROSION CONTROL MAINTENANCE PLAN

1. ALL EROSION AND SEDIMENT CONTROL PRACTICES WILL BE CHECKED FOR STABILITY AND OPERATION FOLLOWING EVERY RUNOFF – PRODUCING RAINFALL BUT IN NO CASE LESS THAN ONCE EVERY WEEK. ANY NEEDED REPAIRS WILL BE MADE IMMEDIATELY TO MAINTAIN ALL PRACTICES AS DESIGNED.
2. INSPECT SEDIMENT TRAPS AT LEAST WEEKLY AND AFTER EACH SIGNIFICANT RAINFALL EVENT AND REPAIR IMMEDIATELY. REMOVE SEDIMENT, AND RESTORE THE TRAP TO ITS ORIGINAL DIMENSIONS WHEN THE SEDIMENT HAS ACCUMULATED TO ONE–HALF THE DESIGN DEPTH OF THE TRAP. PLACE THE SEDIMENT THAT IS REMOVED IN DESIGNATED DISPOSAL AREA, AND REPLACE THE PART OF THE GRAVEL FACING THAT IS IMPAIRED BY SEDIMENT
3. SEDIMENT WILL BE REMOVED FROM BEHIND THE SEDIMENT FENCE WHEN IT BECOMES ABOUT 0.5 FEET DEEP AT THE FENCE. THE SEDIMENT FENCE WILL BE REPAIRED OR REPLACED AS NECESSARY TO MAINTAIN A BARRIER.
4. ALL AREAS WILL BE FERTILIZED, RESEEDED AS NECESSARY, AND MULCHED ACCORDING TO SPECIFICATIONS IN THE VEGETATIVE PLAN TO MAINTAIN A VIGOROUS, DENSE VEGETATIVE COVER.
5. GRAVEL CONSTRUCTION ENTRANCE TO BE CLEANED WHEN SEDIMENT ACCUMULATIONS ARE VISIBLE OR SEDIMENT IS DEPOSITED ON THE ASPHALT AND STONE WILL BE PERIODICALLY TOP DRESSED WITH 2 INCHES OF #4 STONE TO MAINTAIN 6 INCH DEPTH.
7. INSPECT INLETS AT LEAST WEEKLY AND AFTER EACH SIGNIFICANT (1½" OR GREATER) RAINFALL EVENT. CLEAR THE WIRE OF ANY DEBRIS OR OTHER OBJECTS TO PROVIDE ADEQUATE FLOW FOR SUBSEQUENT RAINS. TAKE CARE NOT TO DAMAGE OR UNDERCUT THE WIRE MESH DURING SEDIMENT REMOVAL. REPLACE STONE AS NEEDED.

EROSION CONTROL NOTES

1. ANY CONSTRUCTION ACTIVITY BEYOND THE 1.9 ACRE LIMITS SHOWN ON THE PLAN IS A VIOLATION OF THE STATE EROSION CONTROL ORDINANCE AND IS SUBJECT TO FINES.
2. CONTRACTOR SHALL REMOVE ALL TREES AND VEGETATION WITHIN ROAD RIGHT OF WAYS UNLESS OTHERWISE DESIGNATED TO REMAIN.
3. CONTRACTOR SHALL RAKE AND REMOVE ROOTS, STUMPS, VEGETATION, DEBRIS, EXISTING STRUCTURES ABOVE AND BELOW GRADE, ORGANIC MATERIAL OR ANY OTHER UNSUITABLE MATERIAL WITH IN THE LIMITS OF CONSTRUCTION.
4. CONTRACTOR SHALL COORDINATE WITH OWNER AND THEIR GEOTECHNICAL REPRESENTATIVE TO COORDINATE REMOVAL OF ANY UNSUITABLE SOILS.
5. CLEARED, GRUBBED, STRIPPED OR OTHER WASTE MATERIALS SHALL BE REMOVED FROM THE SITE AND DISPOSED OF IN A PROPERLY PERMITTED FACILITY.
6. THE CONTRACTOR SHALL FURNISH ANY REQUIRED BORROW MATERIALS FROM A PROPERLY PERMITTED OFF–SITE FACILITY.
7.

a) SOIL STABILIZATION SHALL BE ACHIEVED ON ANY AREA OF A SITE WHERE LAND–DISTURBING ACTIVITIES HAVE TEMPORARILY OR PERMANENTLY CEASED ACCORDING TO THE FOLLOWING SCHEDULE:

i) ALL PERIMETER DIKES, SWALES, DITCHES, PERIMETER SLOPES AND ALL SLOPES STEEPER THAN 3 HORIZONTAL TO 1 VERTICAL (3:1) SHALL BE PROVIDED TEMPORARY OR PERMANENT STABILIZATION WITH GROUND COVER AS SOON AS PRACTICABLE BUT IN ANY EVENT WITHIN 7 CALENDAR DAYS FROM THE LAST LAND–DISTURBING ACTIVITY.

ii) ALL OTHER DISTURBED AREAS SHALL BE PROVIDED TEMPORARY OR PERMANENT STABILIZATION WITH GROUND COVER AS SOON AS PRACTICABLE BUT IN ANY EVENT WITHIN 14 CALENDAR DAYS FROM THE LAST LAND–DISTURBING ACTIVITY.

b) CONDITIONS – IN MEETING THE STABILIZATION REQUIREMENTS ABOVE, THE FOLLOWING CONDITIONS OR EXEMPTIONS SHALL APPLY:

i) EXTENSIONS OF TIME MAY BE APPROVED BY THE PERMITTING AUTHORITY BASED ON WEATHER OR OTHER SITE SPECIFIC CONDITIONS THAT MAKE COMPLIANCE IMPRACTICABLE.

ii) ALL SLOPES 50' IN LENGHT OR GREATER SHALL APPLY THE GROUND COVER WITHIN 7 DAYS EXCEPT WHEN THE SLOPE ARE STEEPER THAN 3:1, THE 7 DAY REQUIREMENT APPLIES.

iii) ANY SLOPED AREA FLATTER THAN 4:1 SHALL BE EXEMPT FROM THE 7 DAY GROUND COVER REQUIREMENT.

iv) SLOPES 10' OR LESS IN LENGTH SHALL BE EXEMPT FROM THE 7 DAY GROUND COVER REQUIREMENT.

v) ALTHOUGH STABILIZATION IS USUALLY SPECIFIED AS GROUND COVER, OTHER METHODS, SUCH AS CHEMICAL STABILIZATION, MAY BE ALLOWED ON A CASE BY CASE BASIS.

vi) FOR PORTIONS OD PROJECTS WITHIN THE SEDIMENT CONTROL COMMISSION DEFINED "HIGH QUALITY WATER ZONE" (15A NCAC 04A.0105), STABILIZATION WITH GROUND COVER SHALL BE ACHIEVED AS SOON AS PRACTICABLE BUT IN ANY EVENT ON ALL AREAS OF THE SITE WITHIN 7 CALENDAR DAYS FROM THE LAST LAND DISTURBING ACT.

vii) PORTIONS OF A SITE THAT ARE LOWER IN ELEVATION THAN ADJACENT DISCHARGE LOCATIONS AND ARE NOT EXPECTED TO DISCHARGE DURING CONSTRUCTION MAY BE EXEMPT FROM THE TEMPORARY GROUND COVER REQUIREMENTS IF IDENTIFIED ON THE APPROVED E&SC PLAN OR ADDED BY THE PERMITTING AUTHORITY.

8. ADDITIONAL MEASURES TO CONTROL EROSION AND SEDIMENT MAY BE REQUIRED BY A REPRESENTATIVE OF THE STATE ENGINEERING DEPARTMENT.
9. SLOPES SHALL BE GRADED NO STEEPER THAN 3:1.
10. ADDITIONAL DEVICES MAY BE REQUIRED AS AGREED UPON BY THE FIELD INSPECTOR, ENGINEER, AND OWNER.
11. IF ACTIVE CONSTRUCTION CEASES IN ANY AREA FOR MORE THAN 15 CALENDAR DAYS, ALL DISTURBED AREAS MUST BE SEEDED, MULCHED, AND TACKED UNLESS WRITTEN APPROVAL IS GRANTED BY THE EROSION CONTROL OFFICER.

CONSTRUCTION SEQUENCE

1. OBTAIN ALL NECESSARY PERMIT APPROVALS PRIOR TO ANY LAND DISTURBING ACTIVITY.
2. HOLD A PRE–CONSTRUCTION MEETING WITH THE EROSION CONTROL INSPECTOR.
3. INSTALL GRAVEL CONSTRUCTION ENTRANCE, INLET PROTECTION AND SILT FENCE, COMMENCE DEMOLITION, CLEARING AND ROUGH GRADING.
4. ROUGH GRADE SITE AND INSTALL UNDERGROUND UTILITIES.
5. INSTALL CURBING AND ROADWAY BASE AND BEGIN BUILDING CONSTRUCTION.
6. ONCE BUILDING EXTERIOR WORK IS NEAR COMPLETE, PAVE ROADWAYS AND PARKING AREAS AND POUR CONC. WALKS.
7. PROVIDE TEMPORARY PROTECTION MEASURES AND DEVICES AS REQUIRED UNTIL UNDERGROUND UTILITIES AND PAVEMENT IS COMPLETE AND FINAL GRADES ARE STABILIZED WITH TEMPORARY VEGETATIVE COVER.
8. STABILIZE (FERTILIZE, SEED, AND MULCH) ALL DISTURBED AREAS AS SOON AS FINAL GRADES ARE ESTABLISHED.
9. ONCE CONSTRUCTION IS COMPLETE AND ALL DISTURBED AREAS ARE STABILIZED, OBTAIN NCDENR'S APPROVAL TO REMOVE TEMPORARY EROSION CONTROL MEASURES.

GRADING NOTES

1. INITIATE EROSION CONTROL SEQUENCE BEFORE BEGINNING CLEARING, GRUBBING AND GRADING OPERATIONS.
2. CLEAR AREAS TO BE GRADED OF ALL VEGETATION. PROTECT VEGETATION BEYOND GRADING LIMITS.
3. STRIP TOPSOIL TO FULL DEPTH IN AREAS TO BE GRADED AND STOCKPILE.
4. COMPACT ALL FILL AREAS TO 95% OF MAXIMUM DENSITY.
5. ALL BANKS AND SWALE SIDE SLOPES SHALL BE GRADED WITH NO GREATER THAN 3:1 SLOPES.
6. ALL AREAS ARE TO BE GRADED SO THAT NO AREAS OF STANDING WATER OCCUR.
7. PROPOSED SPOT ELEVATIONS ARE SHOWN AT FINISHED GRADE.
8. OPERATOR SHALL FIELD VERIFY EXISTING TOPOGRAPHY IN RELATION TO THE PROPOSED GRADES TO ENSURE DRAINAGE IN THE DIRECTIONS INDICATED ON THE PLAN.

TEMPORARY SEEDING

GRASS TYPE	AMOUNT/ 1000 S.F.	TIME OF SEEDING	INITIAL
RYE GRAIN	1–2 LBS.	NOV. THRU JAN.	25 LBS. 10–10–10
BROWNTOP MILLET	1–2 LBS.	JUNE THRU AUG.	25 LBS. 10–10–10

PERMANENT SEEDING

GRASS TYPE	AMOUNT/ 1000 S.F.	TIME OF SEEDING	INITIAL
BERMUDA, COMMON	1–2 LBS.	APRIL THRU JUNE	25 LBS. 10–10–10
FESCUE, TALL (KENTUCKY 31)	5–7 LBS.	JUNE THRU AUG. FEB. THRU OCT.	25 LBS. 10–10–10
SERICEA LESPEDEZA (SLOPES)	1–2 LBS.	MARCH THRU APRIL	25 LBS. 10–10–10

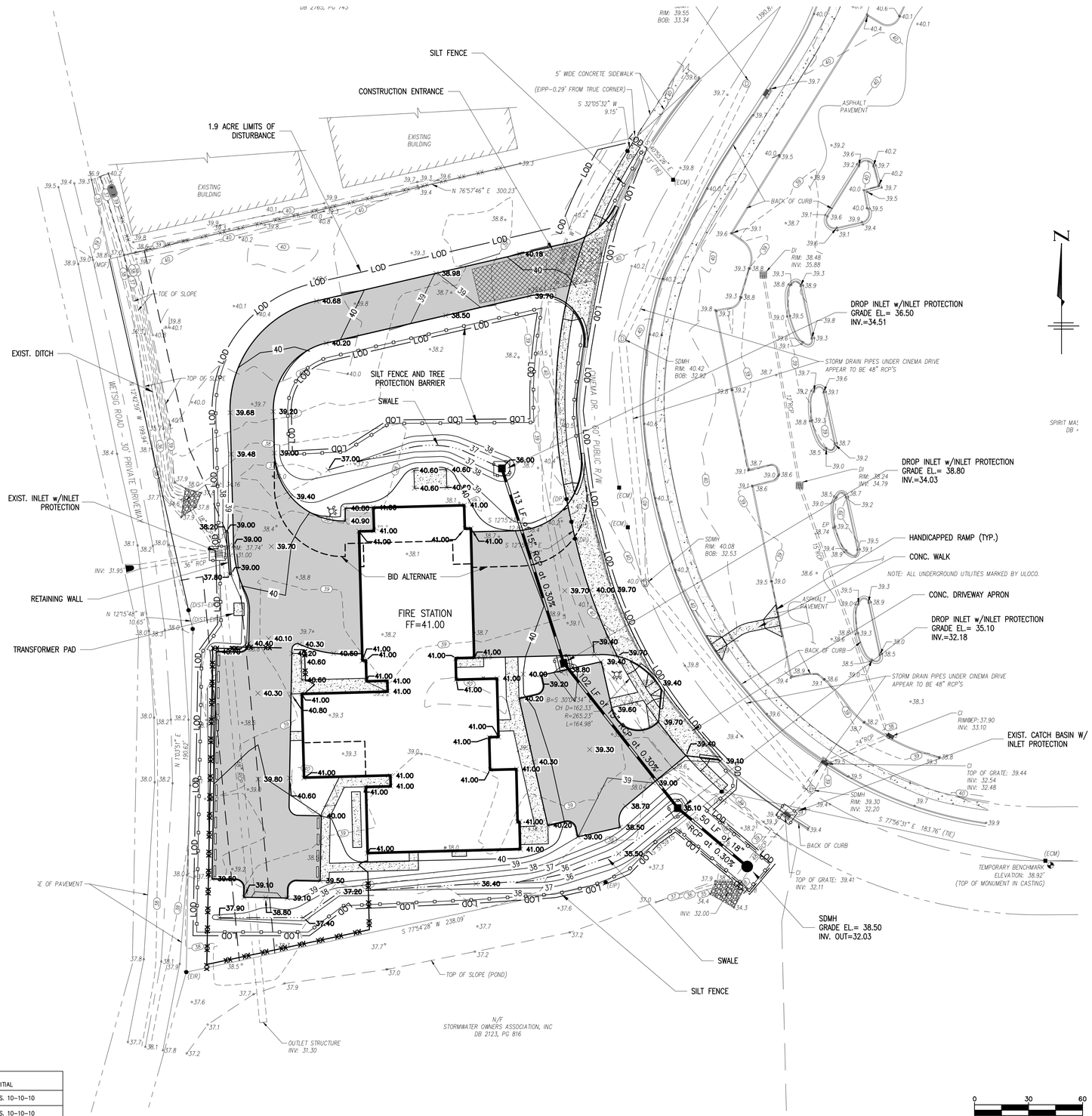

BECKER MORGAN GROUP
ARCHITECTURE PLANNING
Wilmington, NC
3205 Randall Parkway, Suite 211
Wilmington, NC 28403
910.341.7600
Salisbury, MD
312 West Main St. Suite 300
Salisbury, MD 21801
410.546.9100
Dover, DE
309 S Governors Ave
Dover, DE 19904
302.734.7950
www.beckermorgan.com

CATLIN Engineers and Scientists
220 Old Dairy Road
Wilmington, NC 28405
Corporate Licensure No. for Engineering Services C-0585

PROJECT TITLE

CITY OF WILMINGTON FIRE DEPARTMENT

FIRE STATION No. 3
114 CINEMA DRIVE
WILMINGTON, NC 28403

SHEET TITLE

GRADING, DRAINAGE & EROSION CONTROL PLAN

ISSUE BLOCK

MARK	DATE	DESCRIPTION
	X	X

PROJECT NO: 2012169.00
DATE: 8/14/2013
SCALE:
DRAWN BY: BLM, DSL PROJ MGR: GMJ

CG-101

COPYRIGHT © 2013

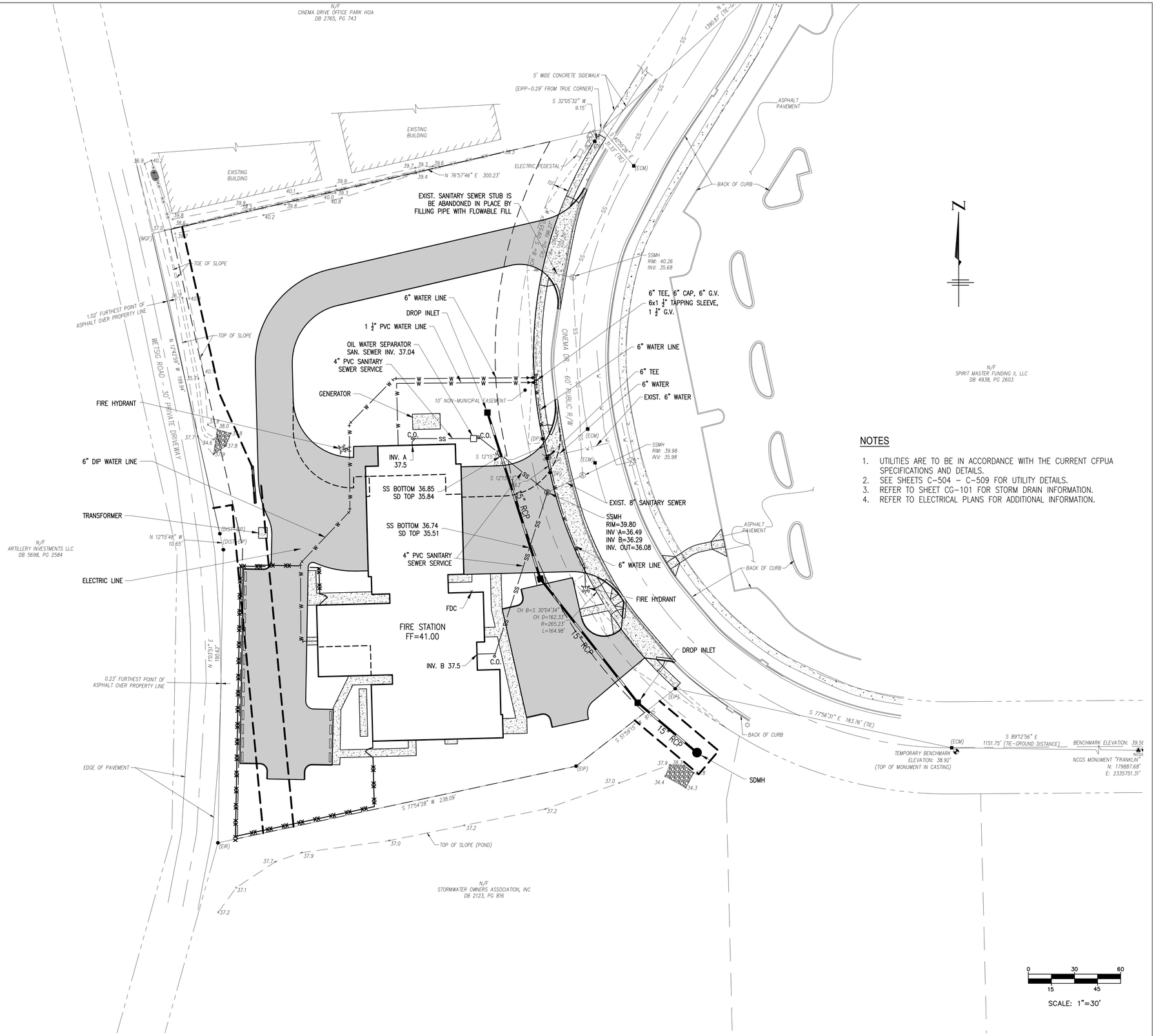

NOTES

1. UTILITIES ARE TO BE IN ACCORDANCE WITH THE CURRENT CFPUA SPECIFICATIONS AND DETAILS.
2. SEE SHEETS C-504 – C-509 FOR UTILITY DETAILS.
3. REFER TO SHEET CG-101 FOR STORM DRAIN INFORMATION.
4. REFER TO ELECTRICAL PLANS FOR ADDITIONAL INFORMATION.

BECKER MORGAN GROUP
ARCHITECTURE PLANNING
Wilmington, NC
3205 Randall Parkway, Suite 211
Wilmington, NC 28403
910.341.7600
Salisbury, MD
312 West Main St. Suite 300
Salisbury, MD 21801
410.546.9100
Dover, DE
309 S Governors Ave
Dover, DE 19904
302.734.7950
www.beckermorgan.com

CATLIN
Engineers and Scientists
220 Old Dairy Road
Wilmington, NC 28405
Corporate Licensure No. for Engineering Services C-0585

PROJECT TITLE

CITY OF WILMINGTON FIRE DEPARTMENT

FIRE STATION No. 3

114 CINEMA DRIVE
WILMINGTON, NC 28403

SHEET TITLE

UTILITY PLAN

ISSUE BLOCK

MARK	DATE	DESCRIPTION
	X	X

PROJECT NO:	2012169.00
DATE:	8/14/2013
SCALE:	
DRAWN BY: BLM, DSL	PROJ MGR: GMJ

CU-101

COPYRIGHT © 2013

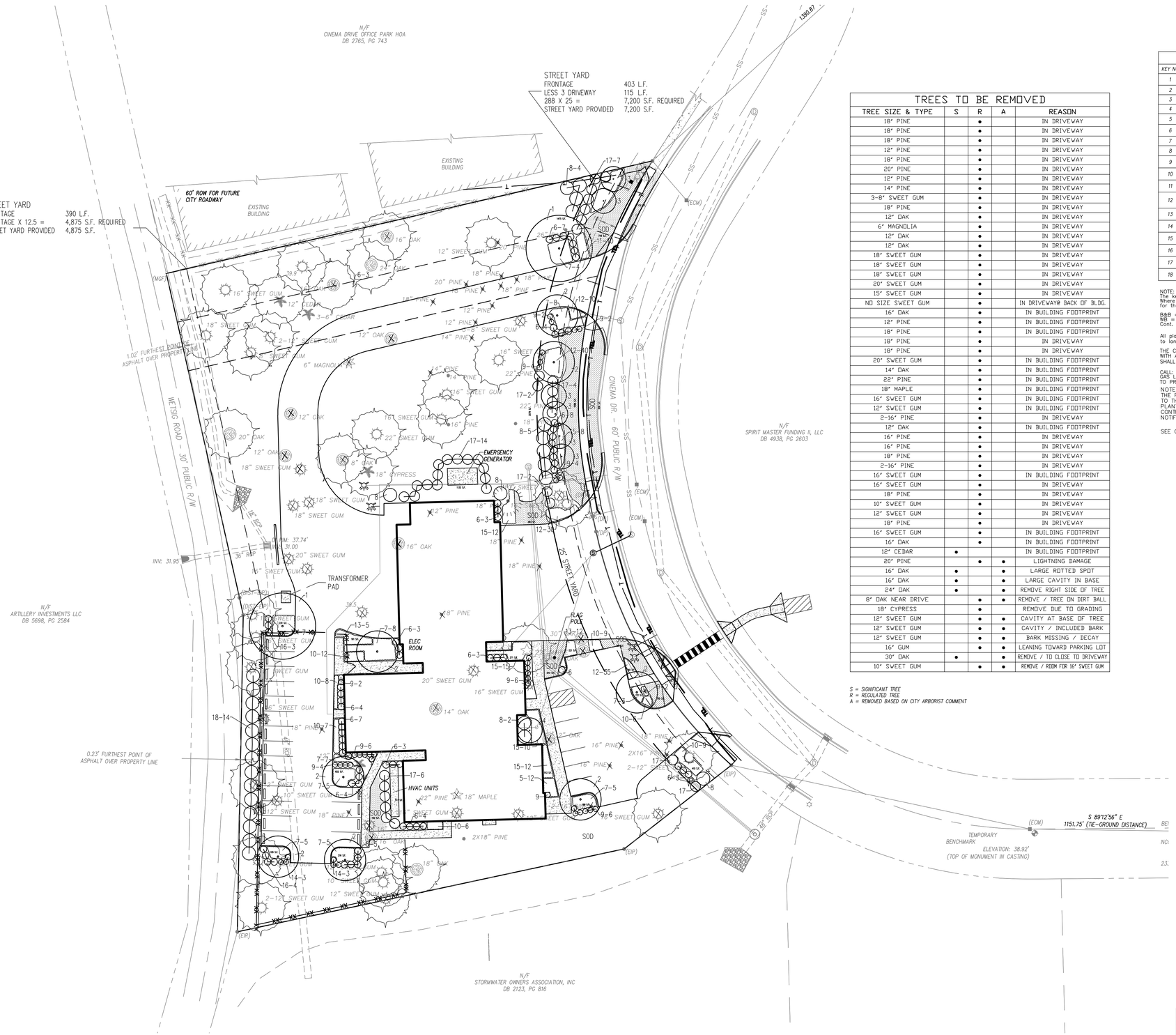

TREES TO BE REMOVED

TREE SIZE & TYPE	S	R	A	REASON
18" PINE		●		IN DRIVEWAY
18" PINE		●		IN DRIVEWAY
18" PINE		●		IN DRIVEWAY
12" PINE		●		IN DRIVEWAY
18" PINE		●		IN DRIVEWAY
20" PINE		●		IN DRIVEWAY
12" PINE		●		IN DRIVEWAY
14" PINE		●		IN DRIVEWAY
3-8" SWEET GUM		●		IN DRIVEWAY
18" PINE		●		IN DRIVEWAY
12" OAK		●		IN DRIVEWAY
6" MAGNOLIA		●		IN DRIVEWAY
12" OAK		●		IN DRIVEWAY
12" OAK		●		IN DRIVEWAY
18" SWEET GUM		●		IN DRIVEWAY
18" SWEET GUM		●		IN DRIVEWAY
18" SWEET GUM		●		IN DRIVEWAY
20" SWEET GUM		●		IN DRIVEWAY
15" SWEET GUM		●		IN DRIVEWAY
NO SIZE SWEET GUM		●		IN DRIVEWAY@ BACK OF BLDG.
16" OAK		●		IN BUILDING FOOTPRINT
12" PINE		●		IN BUILDING FOOTPRINT
18" PINE		●		IN BUILDING FOOTPRINT
18" PINE		●		IN DRIVEWAY
18" PINE		●		IN DRIVEWAY
20" SWEET GUM		●		IN BUILDING FOOTPRINT
14" OAK		●		IN BUILDING FOOTPRINT
22" PINE		●		IN BUILDING FOOTPRINT
18" MAPLE		●		IN BUILDING FOOTPRINT
16" SWEET GUM		●		IN BUILDING FOOTPRINT
12" SWEET GUM		●		IN BUILDING FOOTPRINT
2-16" PINE		●		IN DRIVEWAY
12" OAK		●		IN BUILDING FOOTPRINT
16" PINE		●		IN DRIVEWAY
16" PINE		●		IN DRIVEWAY
18" PINE		●		IN DRIVEWAY
2-16" PINE		●		IN DRIVEWAY
16" SWEET GUM		●		IN BUILDING FOOTPRINT
16" SWEET GUM		●		IN DRIVEWAY
18" PINE		●		IN DRIVEWAY
10" SWEET GUM		●		IN DRIVEWAY
12" SWEET GUM		●		IN DRIVEWAY
18" PINE		●		IN DRIVEWAY
16" SWEET GUM		●		IN BUILDING FOOTPRINT
16" OAK		●		IN BUILDING FOOTPRINT
12" CEDAR	●			IN BUILDING FOOTPRINT
20" PINE		●	●	LIGHTNING DAMAGE
16" OAK	●		●	LARGE ROTTED SPOT
16" OAK	●		●	LARGE CAVITY IN BASE
24" OAK	●		●	REMOVE RIGHT SIDE OF TREE
8" OAK NEAR DRIVE		●	●	REMOVE / TREE ON DIRT BALL
18" CYPRESS		●		REMOVE DUE TO GRADING
12" SWEET GUM		●	●	CAVITY AT BASE OF TREE
12" SWEET GUM		●	●	CAVITY / INCLUDED BARK
12" SWEET GUM		●	●	BARK MISSING / DECAY
16" GUM		●	●	LEANING TOWARD PARKING LOT
30" OAK	●		●	REMOVE / TO CLOSE TO DRIVEWAY
10" SWEET GUM		●	●	REMOVE / ROOM FOR 16" SWEET GUM

S = SIGNIFICANT TREE
R = REGULATED TREE
A = REMOVED BASED ON CITY ARBORIST COMMENT

CINEMA DRIVE FIRE STATION PLANT LIST

KEY NO.	QUANTITY	BOTANICAL NAME	COMMON NAME	ROOT	CAL.	HT.	REMARKS
1	2	QUERCUS VIRGINIANA	LIVE OAK	WB	2 1/2"-3"	10"-12"	
2	9	PRUNUS SERRULATA	YOSHINO CHERRY	WB	2 1/2"-3"	10"-12"	
3	6	LAGERSTROEMIA INDICA	CREPE MYRTLE	WB		8'-10'	VAR. MUSKAGEE
4	1	ACER PALMATUM	JAPANESE MAPLE	25 GAL.	2 1/2"	8'-0"	VAR. BLOODGOOD
5	20	OPHIOPOGON JAPONICUS	MONDO GRASS	1 GAL.			1' O.C.
6	55	ILEX VOMITORIA NANA	DWARF YAUPON	3 GAL.			4' O.C.
7	54	JUNIPERUS DAVURICA PARSONI	PARSONS JUNIPER	3 GAL.			5' O.C.
8	21	PITTOSPORUM TOBIRA	PITTOSPORUM	7 GAL.			8' O.C.
9	38	PITTOSPORUM TOBIRA NANA	WHEELER'S DWARF	3 GAL.			3' O.C.
10	57	HEMEROCALLIS HYBRIDA	DAYLILLY	1 GAL.			3" O.C. STELLA D'ORE
11	10	HEMEROCALLIS HYBRIDA	DAYLILLY	1 GAL.			3' O.C. HYPERION
12	115	MUHLENBERGIA CAPILLARIS	PINK MUHLY GRASS	3 GAL.			2' O.C.
13	17	CALAMAGROSTIS BRACHYTRICHA	KOREAN FEATHER REED GRASS	1 GAL.			2' O.C.
14	6	PANICUM VIRGATUM	CLOUD NINE TALL SWITCHGRASS	3 GAL.			3' O.C.
15	49	PENNISETUM ALOPECUROIDES "CASSIAN"	DWARF FOUNTAIN GRASS	3 GAL.			3' O.C.
16	7	PENNISETUM ALOPECUROIDES "FOXTROT"	GIANT FOUNTAIN GRASS	3 GAL.			3' O.C.
17	38	OSMANTHUS X FORTUNEI	FORTUNE TEA OLIVE	10 GAL.			6' O.C.
18	14	PYRACANTHA COCCINEA	SCARLET FIRETHORN	7 GAL.			8' O.C.

NOTE:
The key number refers to the Plant List. Where there is only one number, it is the key number and the Quantity is one. Where there are two numbers connected by a dash, the first is the key number and the second is the quantity required for the planting bed indicated.

B&B = Ball and Burlap
WB = Wire Basket
Cont. = Container grown

All plant bed areas shall be covered in a minimum of 3" of premium chocolate mulch.(Sample & source to be provided to landscape architect for approval)

THE CONTRACTOR IS RESPONSIBLE FOR LOCATING AND FLAGGING ALL UNDERGROUND UTILITIES PRIOR TO PROCEEDING WITH ANY EXCAVATION WORK. IF ANY DAMAGE IS DONE TO EXISTING OR NEW UTILITIES, ALL NECESSARY REPAIRS SHALL BE THE RESPONSIBILITY OF THE CONTRACTOR WITH NO COST TO THE OWNER.

CALL: 1-800-632-4949 TO LOCATE UNDERGROUND UTILITIES PRIOR TO ANY EXCAVATION. GAS LINES ARE LOCATED ON SITE. CONTRACTOR TO VERIFY WITH OWNER OR OWNERS REPRESENTATIVE PRIOR TO PROCEEDING WITH ANY EXCAVATION.

NOTE:
THE PLANT QUANTITIES SHOWN ON THE PLANT LIST ARE PROVIDED AS A CONVENIENCE TO THE CONTRACTOR. IN THE EVENT THERE IS A DIFFERANCE IN QUANTITY BETWEEN PLANT QUANTITIES IN THE PLANT LIST AND PLANT QUANTITIES ON THE PLAN, THE CONTRACTOR SHALL USE THE QUANTITY SHOWN ON THE PLAN. THE CONTRACTOR SHALL NOTIFY THE LANDSCAPE ARCHITECT OF ANY QUANTITY DIFFERANCE.

SEE CIVIL DRAWING FOR LOCATION AND DETAIL OF TREE PROTECTION FENCING

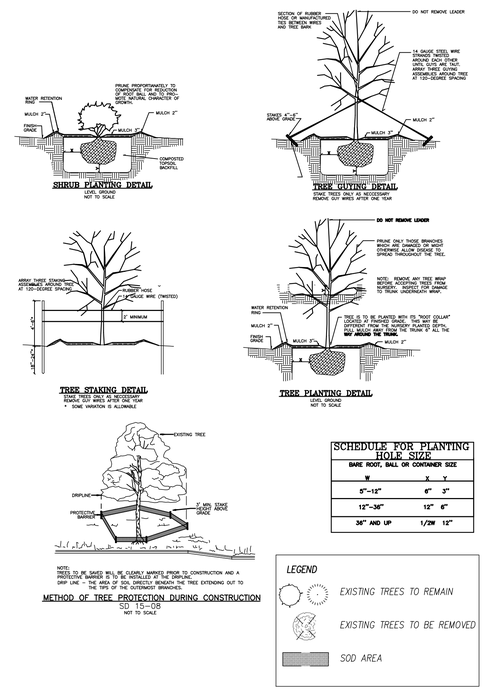

SCHEDULE FOR PLANTING HOLE SIZE		
BARE ROOT, BALL OR CONTAINER SIZE		
W	X	Y
9"-12"	6"	3"
12"-36"	12"	6"
36" AND UP	1/2W	12"

LEGEND
EXISTING TREES TO REMAIN
EXISTING TREES TO BE REMOVED
SOD AREA

HTCA
Howard T. Capps & Associates, Inc.
Land Planning Landscape Architecture
4326 Breezewood Drive, Suite 102
Wilmington, North Carolina 28412
Phone: (910) 793-7708

GRAPHIC SCALE
0 15 30 60 90
SCALE: 1"=30'

BECKER MORGAN GROUP
ARCHITECTURE PLANNING
Wilmington, NC
3205 Randall Parkway, Suite 211
Wilmington, NC 28403
910.341.7600
Salisbury, MD
312 West Main St. Suite 300
Salisbury, MD 21801
410.546.9100
Dover, DE
309 S Governors Ave
Dover, DE 19904
302.734.7950
www.beckermorgan.com

HOWARD T. CAPPS & ASSOCIATES, INC. C-97
NORTH CAROLINA 2009 HOWARD CAPPS

NOT FOR CONSTRUCTION

PROJECT TITLE

FIRE STATION No. 3
114 CINEMA DRIVE
WILMINGTON, NC 28403

SHEET TITLE

LANDSCAPE PLAN

ISSUE BLOCK		
	X	X
MARK	DATE	DESCRIPTION

PROJECT NO:	2012169.00
DATE:	10/29/2013
SCALE:	
DRAWN BY: RHC	PROJ MGR: HTC

L1

COPYRIGHT © 2013

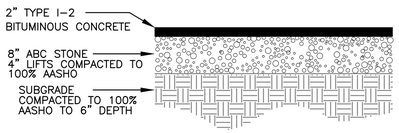

ASPHALT PAVEMENT SECTION

NOT TO SCALE

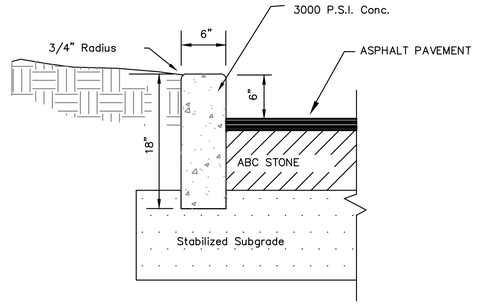

HEADER CURB DETAIL

NOT TO SCALE

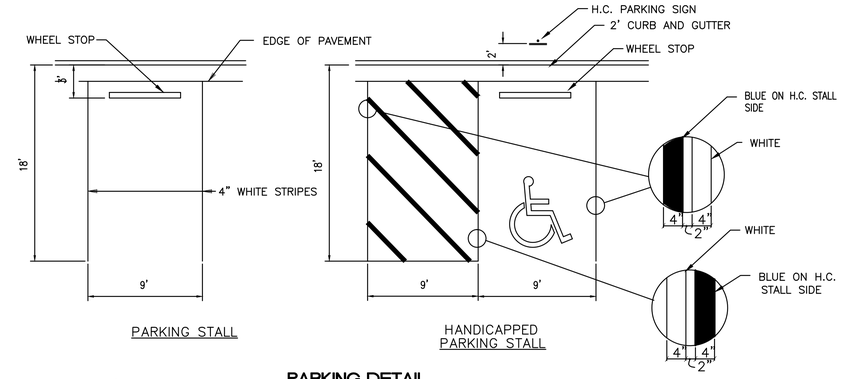

PARKING DETAIL

NOT TO SCALE

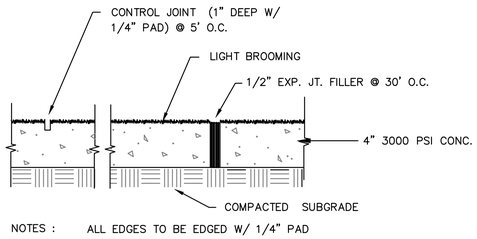

NOTES : ALL EDGES TO BE EDGED W/ 1/4" PAD

CONCRETE WALK SECTION

NOT TO SCALE

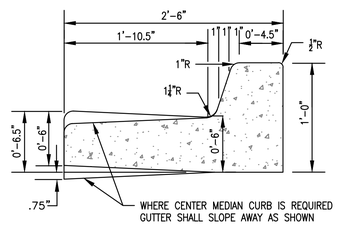

STANDARD CURB SECTION TYPE "A"

NOT TO SCALE

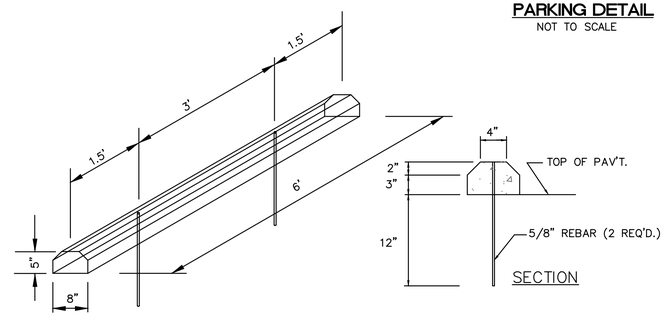

WHEEL STOP DETAIL

NOT TO SCALE

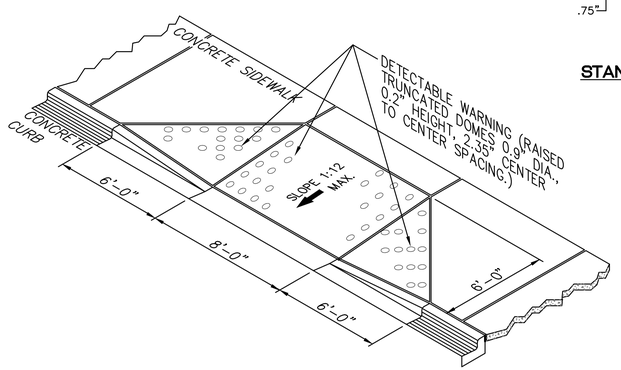

HANDICAPPED RAMP

NOT TO SCALE

NOTES:
1. DETECTABLE WARNING DOMES SHALL COVER 2'-0" LENGTH AND FULL WIDTH OF THE RAMP FLOOR AS SHOWN ON THE DETAILS.
2. OBTAIN 70% CONTRAST VISIBILITY WITH ADJOINING SURFACE, EITHER LIGHT-ON-DARK, OR DARK-ON-LIGHT SEQUENCE COVERING THE ENTIRE RAMP.

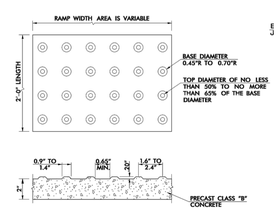

DETECTABLE WARNING DOMES

NOT TO SCALE

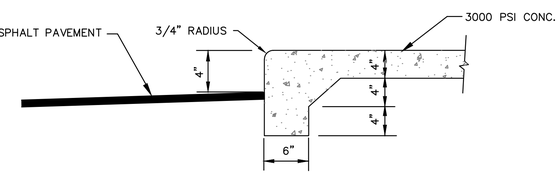

THICKENED EDGE SIDE WALK

NOT TO SCALE

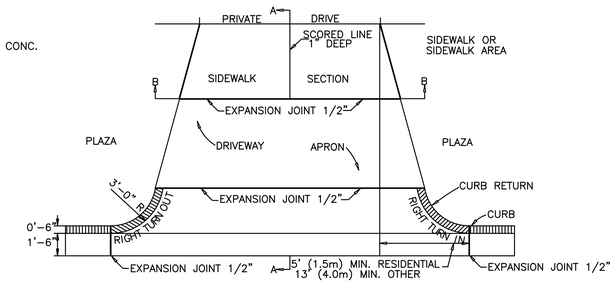

PAVEMENT PLAN

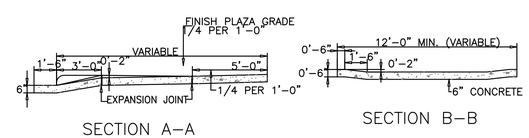

SECTION A–A

SECTION B–B

STANDARD DRIVEWAY DETAIL

NOT TO SCALE

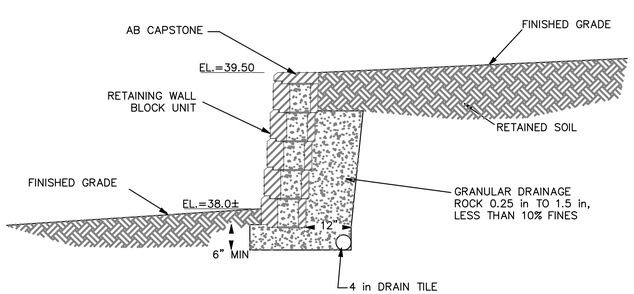

RETAINING WALL SECTION

NOT TO SCALE

BECKER MORGAN GROUP

ARCHITECTURE PLANNING

Wilmington, NC
3205 Randall Parkway, Suite 211
Wilmington, NC 28403
910.341.7600

Salisbury, MD
312 West Main St. Suite 300
Salisbury, MD 21801
410.546.9100

Dover, DE
309 S Governors Ave
Dover, DE 19904
302.734.7950

www.beckermorgan.com

CATLIN Engineers and Scientists

220 Old Dairy Road
Wilmington, NC 28405

Corporate Licensure No. for Engineering Services C-0585

PROJECT TITLE

CITY OF WILMINGTON FIRE DEPARTMENT

FIRE STATION No. 3
114 CINEMA DRIVE
WILMINGTON, NC 28403

SHEET TITLE

DETAILS

ISSUE BLOCK

MARK	DATE	DESCRIPTION
	X	X

PROJECT NO:	2012169.00
DATE:	8/14/2013
SCALE:	
DRAWN BY: BLM, DSL	PROJ MGR: GMJ

C-501

COPYRIGHT © 2013

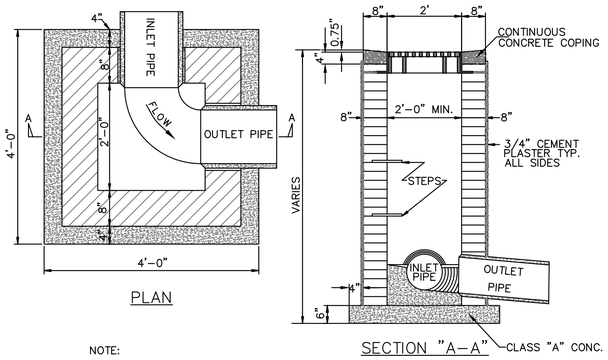

NOTE:
FRAME AND GRATE TO BE STANDARD CITY OF WILMINGTON CAST IRON FRAME AND GRATE PER SD 14-04

GRILL BASIN

NOT TO SCALE

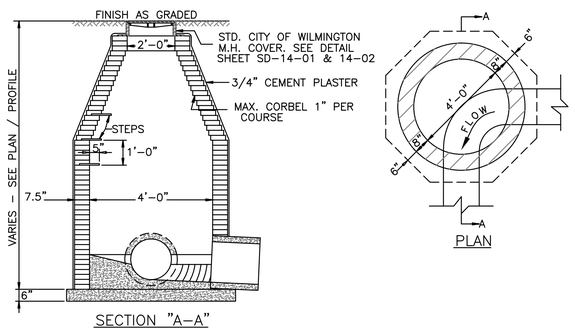

GUIDELINES FOR STORM DRAIN MANHOLE

NOT TO SCALE

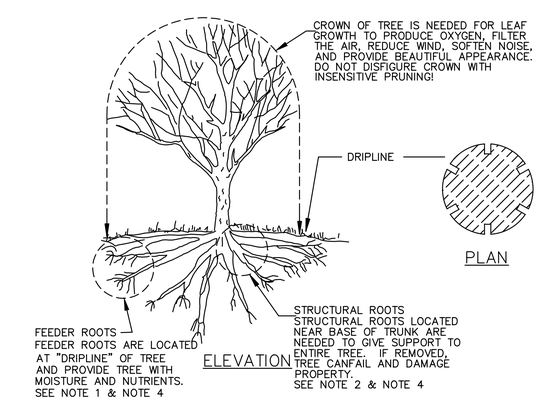

TREE PROTECTION DURING CONSTRUCTION

1. DO NOT COMPACT SOIL BENEATH TREES. NO VEHICLE SHALL BE ALLOWED TO PARK UNDER TREES. NO HEAVY MATERIALS SHALL BE STORED BENEATH TREES. RESULTS OF COMPACTION CAUSE WATER AND AIR NOT TO REACH THE ROOTS AND THE TREE WILL DIE. THESE "FEEDING ROOTS" OCCUR WELL AWAY FROM THE BASE OF THE TREE TO THE EDGE OF THE OVERHEAD BRANCH CANOPY. DAMAGING THE BARK WITH LAWNMOWERS, CONSTRUCTION EQUIPMENT, OR ANYTHING ELSE IS PROHIBITED. APROTECTIVE BARRIER SHOULD PREVENT DAMAGE FROM OCCURING DURING CONSTRUCTION.
2. NO CUTTING OF LARGE STRUCTURAL ROOTS LOCATED NEAR THE BASE OF THE TRUNK. THESE ARE ESSENTIAL IN SUPPORTING THE TREE AND HOLDING IT UPRIGHT IN HIGH WINDS. REMOVAL OF THESE ROOTS ALONG ONE SIDE IS OFTEN DONE BECAUSE OF A WALK, PAVING OR BUILDING WHICH IS BEING CONSTRUCTED.
3. AVOID CUT AND FILL WITHIN DIAMETER OF TREE CROWN DURING EXCAVATION.

METHOD OF TREE PROTECTION DURING CONSTRUCTION

NOT TO SCALE

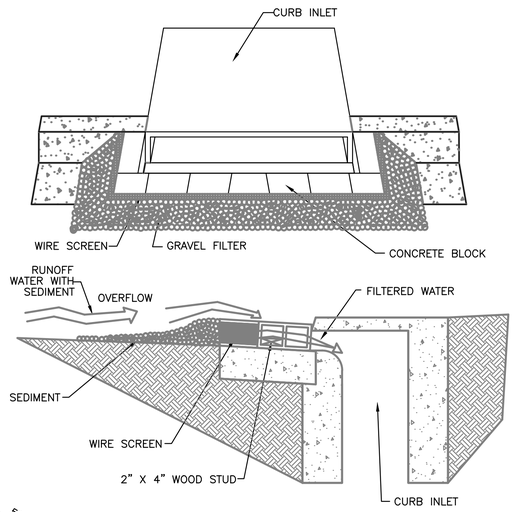

CURB INLET PROTECTION

NOT TO SCALE

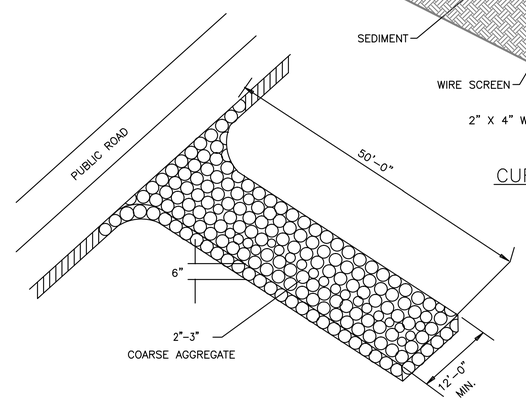

CONSTRUCTION ENTRANCE/EXIT

NOT TO SCALE

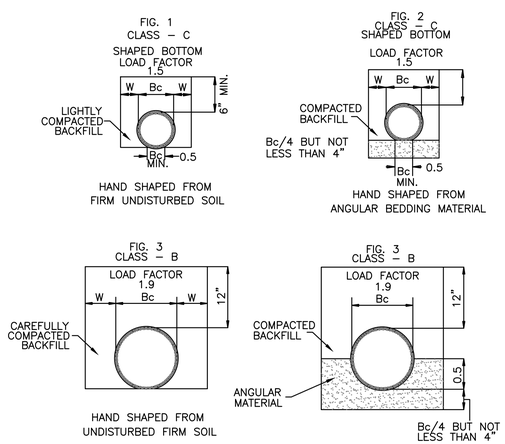

GUIDELINES FOR BEDDING DETAILS, STORM SEWER CLASSES (B + C)

NOT TO SCALE

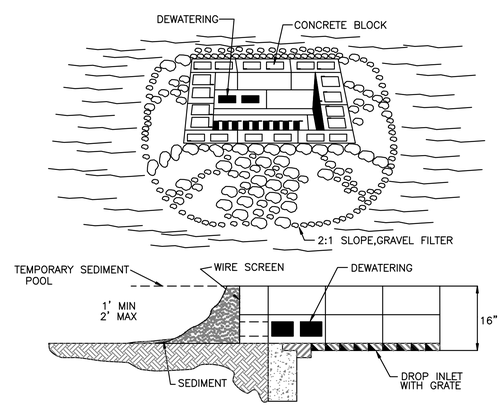

CONSTRUCTION SPECIFICATIONS

1. LAY ONE BLOCK ON EACH SIDE OF THE STRUCTURE ON ITS SIDE IN THE BOTTOM ROW TO ALLOW POOL DRAINAGE. THE FOUNDATION SHOULD BE EXCAVATED AT LEAST 2" BELOW THE CREST OF THE STORM DRAIN. PLACE THE BOTTOM ROW OF BLOCKS AGAINST THE EDGE OF THE STORM DRAIN FOR LATERAL SUPPORT AND TO AVOID WASHOUTS WHEN OVERFLOW OCCURS. IF NEEDED, GIVE LATERAL SUPPORT TO SUBSEQUENT ROWS BY PLACING 2x4 WOOD STUDS THROUGH BLOCK OPENINGS.
2. CAREFULLY FIT HARDWARE CLOTH OR COMPARABLE WIRE MESH WITH 1/2-INCH OPENINGS OVER ALL BLOCK OPENINGS TO HOLD GRAVEL IN PLACE.
3. USE CLEAN GRAVEL, 3/4 TO 1/2-INCH IN DIAMETER, PLACED 2 INCHES BELOW THE TOP OF THE BLOCK ON A 2:1 SLOPE OR FLATTER AND SMOOTH IT TO AN EVEN GRADE. D.O.T #57 WASHED STONE IS RECOMMENDED.

DROP INLET PROTECTION

NOT TO SCALE

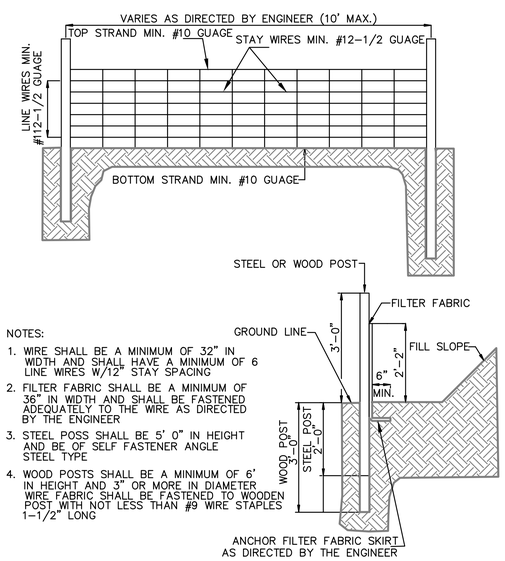

NOTES:

1. WIRE SHALL BE A MINIMUM OF 32" IN WIDTH AND SHALL HAVE A MINIMUM OF 6 LINE WIRES W/12" STAY SPACING
2. FILTER FABRIC SHALL BE A MINIMUM OF 36" IN WIDTH AND SHALL BE FASTENED ADEQUATELY TO THE WIRE AS DIRECTED BY THE ENGINEER
3. STEEL POSS SHALL BE 5' 0" IN HEIGHT AND BE OF SELF FASTENER ANGLE STEEL TYPE
4. WOOD POSTS SHALL BE A MINIMUM OF 6' IN HEIGHT AND 3" OR MORE IN DIAMETER WIRE FABRIC SHALL BE FASTENED TO WOODEN POST WITH NOT LESS THAN #9 WIRE STAPLES 1-1/2" LONG

GUIDELINES FOR TEMPORARY SILT FENCE DETAIL

NOT TO SCALE

BECKER MORGAN GROUP
ARCHITECTURE PLANNING
Wilmington, NC
3205 Randall Parkway, Suite 211
Wilmington, NC 28403
910.341.7600
Salisbury, MD
312 West Main St. Suite 300
Salisbury, MD 21801
410.546.9100
Dover, DE
309 S Governors Ave
Dover, DE 19904
302.734.7950
www.beckermorgan.com

CATLIN Engineers and Scientists
220 Old Dairy Road
Wilmington, NC 28405
Corporate Licensure No. for Engineering Services C-0585

PROJECT TITLE

CITY OF WILMINGTON FIRE DEPARTMENT

FIRE STATION No. 3
114 CINEMA DRIVE
WILMINGTON, NC 28403

SHEET TITLE

DETAILS

ISSUE BLOCK

MARK	DATE	DESCRIPTION
	X	X

PROJECT NO: 2012169.00
DATE: 8/14/2013
SCALE:
DRAWN BY: BLM, DSL | PROJ MGR: GMJ

C-502

COPYRIGHT © 2013

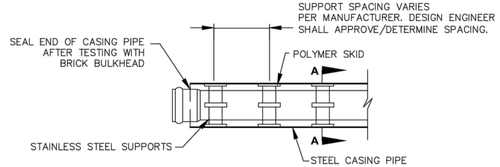

NOTE: PIPE SUPPORT TO BE PLACED TO PROVIDE PROPER SUPPORT, ALIGNMENT, AND GRADE AS SPECIFIED. CONTINUOUS SUPPORTS MAY BE USED AS ALTERNATIVE. OIL, GREASE, OR PETROLEUM PRODUCT MAY NOT BE USED AS LUBRICANT.

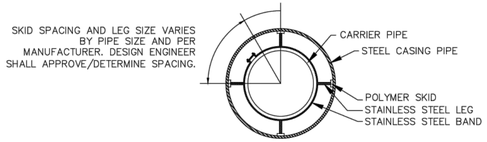

SECTION A-A

NOT TO SCALE

PIPE CASING SUPPORT DETAIL

NOT TO SCALE

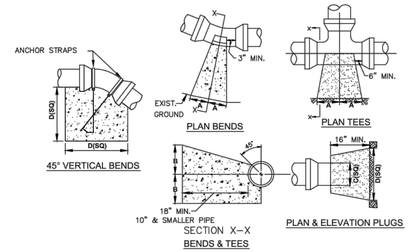

SIZE	90° BENDS		45° BENDS		22 1/2° BENDS		TEES/PLUGS		45°VERT. BENDS
	A	B	A	B	A	B	A	B	
3"	8"	6"	5"	6"	3"	7"	6"	8"	27"
4"	8"	9"	5"	8"	3"	11"	6"	9"	28"
6"	14"	11"	9"	9"	8"	8"	12"	9"	36"
8"	16"	16"	12"	12"	10"	13"	14"	13"	42"
10"	18"	22"	15"	14"	14"	16"	18"	15"	50"
12"	20"	28"	18"	17"	16"	16"	22"	18"	62"
14"	26"	29"	21"	19"	18"	18"	26"	20"	72"
16"	33"	29"	25"	21"	20"	21"	32"	21"	83"
18"	40"	30"	28"	24"	22"	23"	36"	24"	88"

NOTES:
1. BASED ON 160 PSI TEST PRESSURE AND 2000 PSF SOIL BEARING CAPACITY.
2. ALL BEARING SURFACES TO BE CARRIED TO UNDISTURBED GROUND.
3. USE MEG–A–LUG (PREFERRED) IN LIEU OF BLOCKING AND RODDING.

THRUST BLOCK DETAIL

NOT TO SCALE

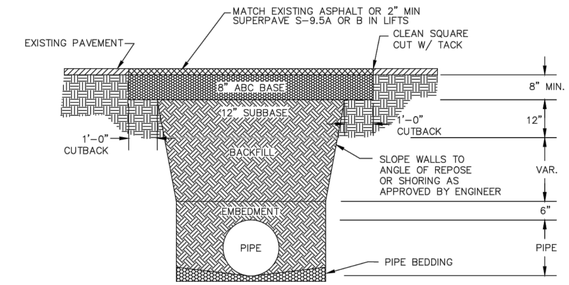

NOTES:
1. BACKFILL SHALL BE SUITABLE MATERIAL THAT IS FREE FROM HEAVY CLAY, GUMBOS, DEBRIS, ORGANICS AND LITTLE TO NO EXCESSIVE MOISTURE.
2. SELECT BACKFILL MAY BE SUBSTITUTED OR REQUIRED BY CITY TO ACHIEVE COMPACTION, (I.E. #57, ABC, CRUSHED LIMESTONE, CLEAN SAND, FLOWABLE FILL, ETC).
3. 8–INCH OF ABC BASE MATERIAL SHALL BE USED ON CITY STREETS.
4. BACKFILL AND BASE MATERIALS SHALL BE COMPACTED 12" MINIMUM LIFTS
5. SOIL SHALL BE COMPACTED BY A MECHANIZED TAMPER (I.E JUMPING JACK), HOWEVER, VIBRATORY ROLLERS > 18" WIDTH MAY BE USED FOR LARGER EXCAVATIONS. THE PLATE TAMP METHOD SHALL NOT BE USED.
6. ALL APPROVED CASTINGS SHALL BE SET FLUSH TO GRADE AND SUPPORTED IF APPLICABLE.
7. ABC BASE AND SUBBASE COMPACTED TO 98% AND BACKFILL AND EMBEDMENT COMPACTED TO 90% AS DETERMINED BY THE MODIFIED PROCTOR AASHTO METHOD T–99.
8. 1–FOOT CUTBACKS OF ASPHALT SHALL BE PREPARED ON UNDISTURBED SOIL. MINIMUM ASPHALT DENSITY IS 90%.

PAVEMENT REPAIR WHERE PIPE INSTALLED

(FOR PRIVATE ROADS AND PAVED AREAS;
CONTRACTOR TO MEET MIN. REQUIREMENTS AS DEFINED BY
RIGHT-OF-WAY OWNER FOR PUBLIC ROAD REPAIRS)

NOT TO SCALE

NOTE:
PAVEMENT WIDTH AND LOCATION IN R/W VARIES. SEE PLAN FOR INDIVIDUAL LOCATION.

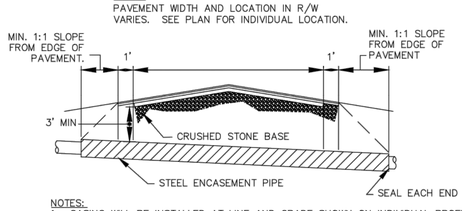

NOTES:
1. CASING WILL BE INSTALLED AT LINE AND GRADE SHOWN ON INDIVIDUAL PROFILE FOR EACH CROSSING. BORING/JACKING TO LINE AND GRADE IS REQUIRED.
2. TRACER WIRE SHALL BE CONTINUED THROUGH CASING

TYPICAL BORING/JACKING DETAIL

NOT TO SCALE

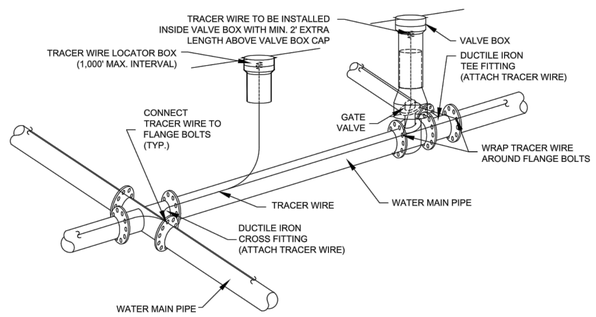

NOTES:
1. TRACER WIRE SHALL BE #10 COPPER SOLID CORE COPPER WIRE WITH GAS AND OIL RESISTANT INSULATION
2. WIRE SHALL BE STRAPPED TO ALL PVC WATER MAIN PIPING WITH DUCT TAPE AT 12-FT. INTERVALS.
3. SECURE WIRE TO ALL TEE AND CROSS FITTINGS.
4. ALL WIRE SPLICES SHALL HAVE WATER PROOF WIRE CONNECTIONS.

TRACER WIRE DETAIL

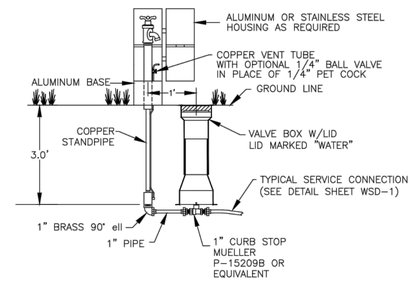

SAMPLING STATION

NOT TO SCALE

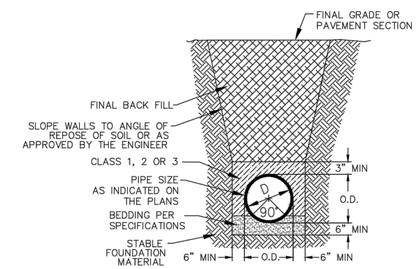

CL 50 DUCTILE IRON DR 18 PVC PIPE TRENCH DETAIL

NOT TO SCALE

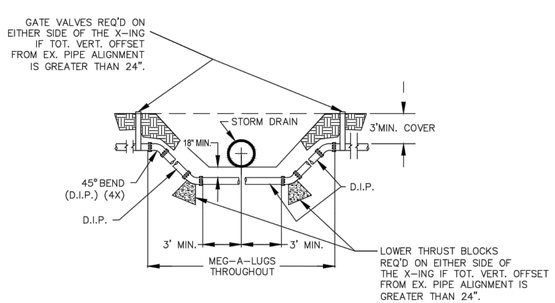

NOTE: USE D.I.P. (CL50 OR BETTER)

WATER MAIN DITCH & STORM DRAIN CROSSING

NOT TO SCALE

GENERAL NOTES:

1. NO EXCAVATED MATERIAL SHALL BE PLACED IN ANY STREAM, DITCH OR DRAINAGE–WAY.
2. THE CONTRACTOR IS RESPONSIBLE FOR LOCATING ALL UNDERGROUND UTILITIES BEFORE ANY CONSTRUCTION BEGINS.
3. THE CONTRACTOR IS RESPONSIBLE FOR TEMPORARY SEDIMENT AND EROSION CONTROL MEASURES WHILE CONSTRUCTION IS IN PROGRESS.
4. THE CONTRACTOR IS RESPONSIBLE FOR STABILIZATION OF ALL DISTURBED AREAS.
5. THE CONTRACTOR IS RESPONSIBLE FOR LAY DOWN & STOCKPILE AREAS (TO ARRANGE AND ENSURE COMPLIANCE WITH ALL LOCAL AND STATE REGULATIONS).

THE DETAILS SHOWN HEREON SUPERCEDE CFPUA WRITTEN TECHNICAL SPECIFICATIONS VERSIONS 1.00 - 1.04

REV:	DESCRIPTION:	DATE:

CFPUA WATER DISTRIBUTION SYSTEM

STANDARD DETAILS

CAPE FEAR PUBLIC UTILITY AUTHORITY
235 GOVERNMENT CENTER DRIVE
WILMINGTON, NC 28403
OFFICE: (910)332-6560
Stewardship. Sustainability. Service.

DATE: 1/9/12
SCALE: N/A
DRAWN BY: CFPUA
CHECKED BY: CFPUA
PROJECT NO. :

SHEET NO: WSD-2

BECKER MORGAN GROUP
ARCHITECTURE PLANNING
Wilmington, NC
3205 Randall Parkway, Suite 211
Wilmington, NC 28403
910.341.7600
Salisbury, MD
312 West Main St. Suite 300
Salisbury, MD 21801
410.546.9100
Dover, DE
309 S Governors Ave
Dover, DE 19904
302.734.7950
www.beckermorgan.com

CATLIN Engineers and Scientists
220 Old Dairy Road
Wilmington, NC 28405
Corporate Licensure No. for Engineering Services C-0585

PROJECT TITLE

CITY OF WILMINGTON FIRE DEPARTMENT

FIRE STATION No. 3
114 CINEMA DRIVE
WILMINGTON, NC 28403

SHEET TITLE

UTILITY DETAILS

ISSUE BLOCK

MARK	DATE	DESCRIPTION
	X	X

PROJECT NO: 2012169.00
DATE: 8/14/2013
SCALE:
DRAWN BY: BLM, DSL | PROJ MGR: GMJ

C-508

COPYRIGHT © 2013

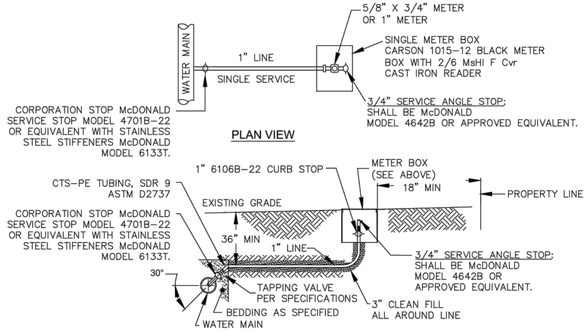

NOTES:
1. NO JOINT SHALL BE INSTALLED BETWEEN THE MAIN SERVICE TAP AND THE METER STOP. ALL SERVICES SHALL BE INSTALLED PERPENDICULAR TO MAIN.
2. SERVICE SADDLES ON PVC MAINS SHALL BE WIDE BAND BRASS BODY: SADDLE McDONALD 3801 OR EQUIVALENT
3. METER BOXES SUSCEPTIBLE TO TRAFFIC SHALL CONFORM TO ASTM A48, CLASS 30B AND AASHTO H20 LOAD RATING STANDARDS (SIP MODEL 4240 OR APPROVED EQUIVALENT)

SINGLE SERVICE CONNECTION

TYPICAL WATER SERVICE CONNECTION FOR RESIDENTIAL SINGLE FAMILY HOME ON CFPUA WATER SYSTEM

NOT TO SCALE

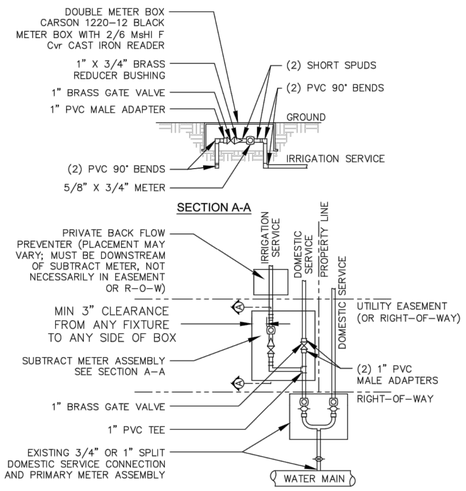

NOTES:
-BEYOND THE PRIMARY DOMESTIC METER ASSEMBLY, CFPUA IS ONLY RESPONSIBLE FOR METER AND WASHERS OF SUBTRACT METER ASSEMBLY
-ALL PIPE AND FITTINGS UP TO FINAL SERVICE LINE TO BE 1" EXCLUDING METERS

PLAN VIEW

DOUBLE SERVICE CONNECTION USING SUBTRACT METER

(MULTIPLE DOMESTIC SERVICES PER TAP)

NOT TO SCALE

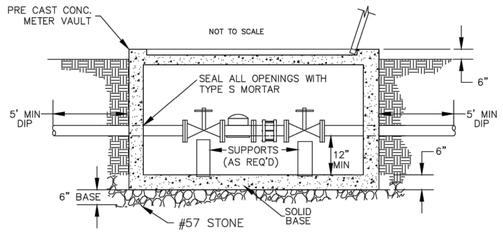

METER VAULT SECTION A-A

NOT TO SCALE

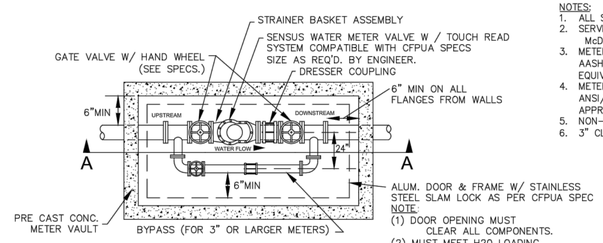

NOTE:
(1) DOOR OPENING MUST CLEAR ALL COMPONENTS.
(2) MUST MEET H20 LOADING REQ. IF IN TRAFFIC AREA.

WATER METER VAULT

FOR WATER METERS LARGER THAN 2"

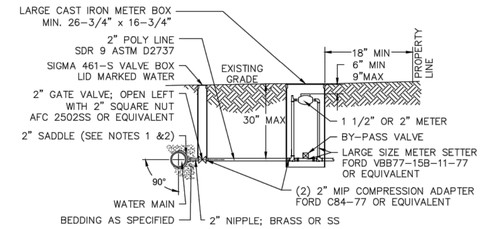

NOTES:
1. ALL SERVICES SHALL BE INSTALLED PERPENDICULAR TO MAIN.
2. SERVICE SADDLES ON PVC MAINS SHALL BE WIDE BAND BRASS BODY: McDONALD 3800, FORD S90 (DOUBLE STRAP) OR EQUIVALENT.
3. METER BOXES SUSCEPTIBLE TO TRAFFIC SHALL CONFORM TO ASTM A48, CLASS 30B AND AASHTO H20 LOAD RATING STANDARDS (OLDCASTLE PRECAST MODEL B1730 OR APPROVED EQUIVALENT).
4. METER BOXES SUSCEPTIBLE TO INCIDENTAL, NON-DELIBERATE TRAFFIC SHALL CONFORM TO ANSI/SCTE 77 TIER 15 LOAD RATING STANDARDS (SYNERTECH MODEL DUO 17x30 OR APPROVED EQUIVALENT).
5. NON-TRAFFIC METER BOXES SHALL BE SIGMA MB2203 OR APPROVED EQUIVALENT.
6. 3" CLEAN FILL REQUIRED ALL AROUND 2" POLY SERVICE LINE.

LARGE METER

FOR 1 1/2" OR 2" WATER SERVICES

NOT TO SCALE

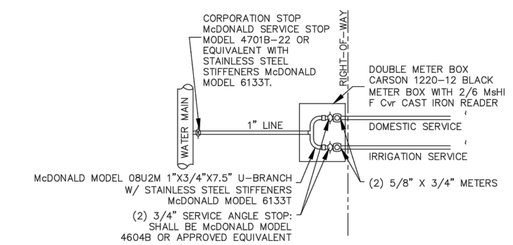

PLAN VIEW

DOUBLE SERVICE CONNECTION

(ONE DOMESTIC SERVICE PER TAP)

NOT TO SCALE

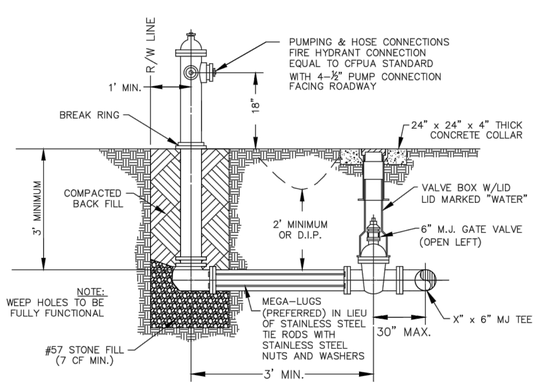

FIRE HYDRANT ASSEMBLY

NOT TO SCALE

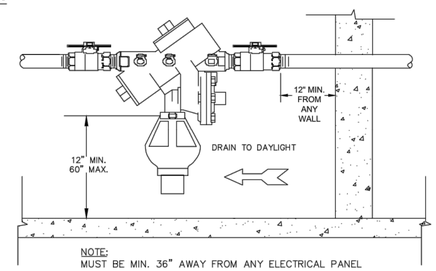

NOTE:
MUST BE MIN. 36" AWAY FROM ANY ELECTRICAL PANEL

INDOOR HORIZONTAL INSTALLATION

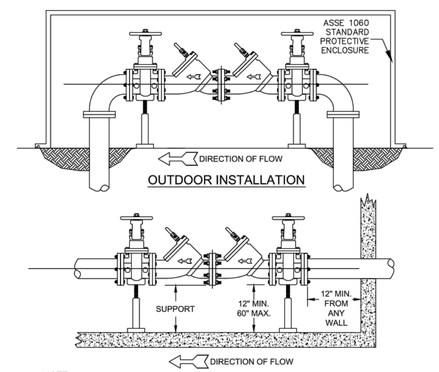

NOTE:
1. MUST BE MIN. 36" AWAY FROM ANY ELECTRICAL PANEL
2. VALVE REQ'D DOWNSTREAM OF BACKFLOW ASSEMBLY
3. VERTICAL INSTALLATION SHALL BE DESIGNED AND SUBMITTED TO CFPUA ESMD FOR APPROVAL

INDOOR INSTALLATION

DOUBLE CHECK VALVE ASSEMBLY

NOT TO SCALE

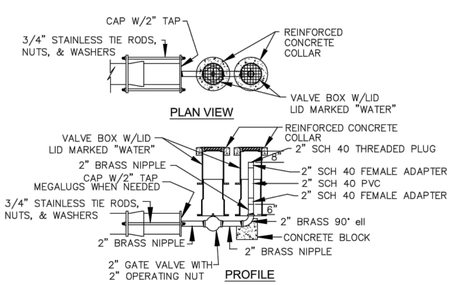

2" BLOW-OFF

NOT TO SCALE

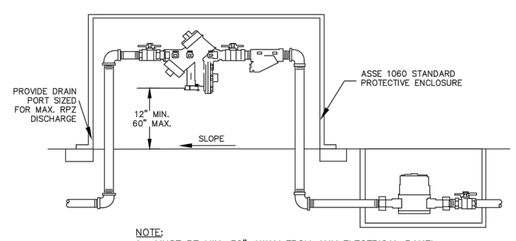

NOTE:
1. MUST BE MIN. 36" AWAY FROM ANY ELECTRICAL PANEL
2. VALVE REQ'D DOWNSTREAM OF BACKFLOW ASSEMBLY
3. VERTICAL INSTALLATION SHALL BE DESIGNED AND SUBMITTED TO CFPUA ESMD FOR APPROVAL

OUTDOOR HORIZONTAL INSTALLATION

REDUCED PRESSURE PRINCIPLE ASSEMBLY

NOT TO SCALE

GENERAL NOTES:

1. NO EXCAVATED MATERIAL SHALL BE PLACED IN ANY STREAM, DITCH OR DRAINAGE-WAY.
2. THE CONTRACTOR IS RESPONSIBLE FOR LOCATING ALL UNDERGROUND UTILITIES BEFORE ANY CONSTRUCTION BEGINS.
3. THE CONTRACTOR IS RESPONSIBLE FOR TEMPORARY SEDIMENT AND EROSION CONTROL MEASURES WHILE CONSTRUCTION IS IN PROGRESS.
4. THE CONTRACTOR IS RESPONSIBLE FOR STABILIZATION OF ALL DISTURBED AREAS.
5. THE CONTRACTOR IS RESPONSIBLE FOR LAY DOWN & STOCKPILE AREAS (TO ARRANGE AND ENSURE COMPLIANCE WITH ALL LOCAL AND STATE REGULATIONS).

THE DETAILS SHOWN HEREON SUPERCEDE CFPUA WRITTEN TECHNICAL SPECIFICATIONS VERSIONS 1.00 - 1.04

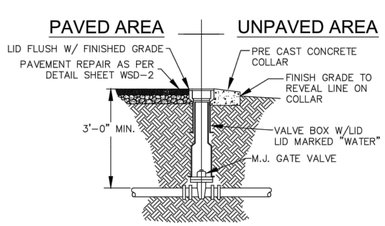

VALVE DETAIL

NOT TO SCALE

REV:	DESCRIPTION:	DATE:
1	Single Service Connection, Double Service Connection, and Large Meter Revised	10/26/12

CFPUA WATER DISTRIBUTION SYSTEM

STANDARD DETAILS

CAPE FEAR PUBLIC UTILITY AUTHORITY
235 GOVERNMENT CENTER DRIVE
WILMINGTON, NC 28403
OFFICE: (910)332-6560
Stewardship. Sustainability. Service.

DATE: 1/9/12
SCALE: N/A
DRAWN BY: CFPUA
CHECKED BY: CFPUA
PROJECT NO. :

SHEET NO: WSD-1

BECKER MORGAN GROUP
ARCHITECTURE PLANNING
Wilmington, NC
3205 Randall Parkway, Suite 211
Wilmington, NC 28403
910.341.7600
Salisbury, MD
312 West Main St. Suite 300
Salisbury, MD 21801
410.546.9100
Dover, DE
309 S Governors Ave
Dover, DE 19904
302.734.7950
www.beckermorgan.com

CATLIN Engineers and Scientists
220 Old Dairy Road
Wilmington, NC 28405
Corporate Licensure No. for Engineering Services C-0585

PROJECT TITLE

CITY OF WILMINGTON FIRE DEPARTMENT

FIRE STATION No. 3
114 CINEMA DRIVE
WILMINGTON, NC 28403

SHEET TITLE

UTILITY DETAILS

ISSUE BLOCK

MARK	DATE	DESCRIPTION
	X	X

PROJECT NO: 2012169.00
DATE: 8/14/2013
SCALE:
DRAWN BY: BLM, DSL | PROJ MGR: GMJ

C-507

COPYRIGHT © 2013

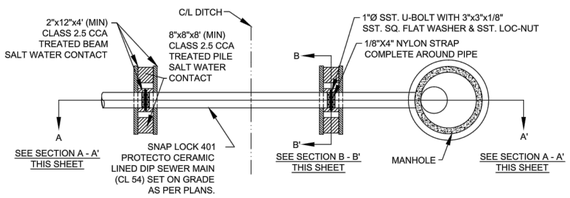

NOTES:

(1) PILES AND PILE DRIVING SHALL CONFORM TO NCDOT STANDARD SPECIFICATIONS FOR ROADS AND STRUCTURES, JANUARY 2002, SECTIONS 445, 450, 1082-2 & 1084-2

(2) CENTERLINE OF BOLTS TO BE A MINIMUM OF 3" FROM OUTSIDE EDGE OF TIMBER. BOLTS TO BE A MINIMUM OF 3" CENTERLINE TO CENTERLINE

(3) ALL STAINLESS STEEL SHALL BE 316. STAINLESS STRAP TO BE COLD FORMED.

(4) PILE SHALL NOT OBSTRUCT FLOW OR CAUSE EROSION OF DITCH/STREAM BANK.

(5) MIN. CLASS 54 DIP-ENGINEER MUST DESIGN LOADING.

(6) DESIGN SHALL BE APPROVED BY CFPUA

PILE AND BENT

NOT TO SCALE

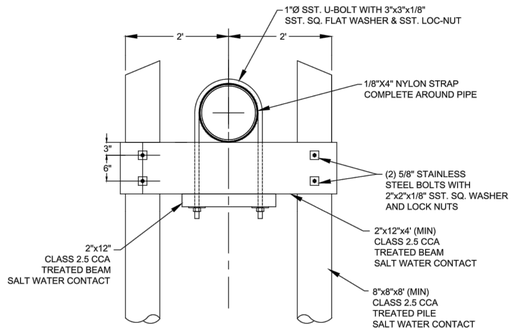

PILE AND BENT SECTION B - B'

NOT TO SCALE

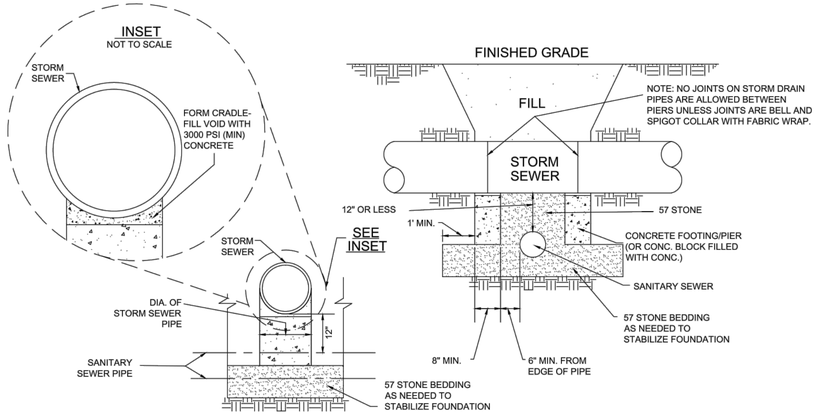

STRUCTURAL BRIDGING DETAIL FOR STORMWATER OVER GRAVITY SEWER INSTALLATIONS WITH LESS THAN 12" SEPARATION

NOT TO SCALE

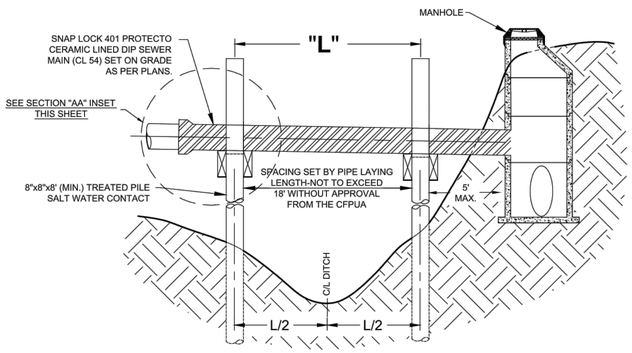

PILE AND BENT SECTION A - A'

NOT TO SCALE

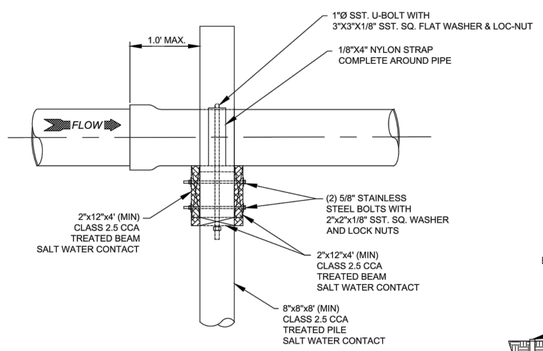

PILE AND BENT SECTION A - A' INSET

NOT TO SCALE

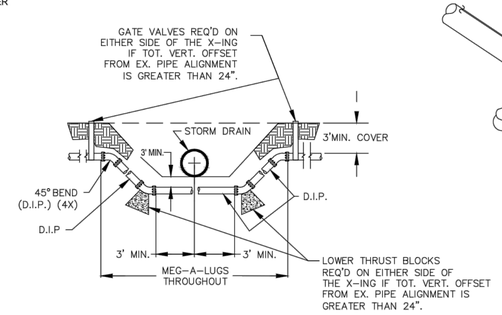

NOTE: USE D.I.P. (CL50 OR BETTER)

FORCE MAIN DITCH & STORM DRAIN CROSSING

NOT TO SCALE

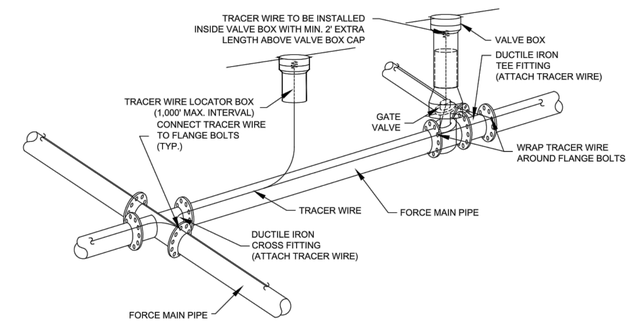

NOTES:
1. TRACER WIRE SHALL BE #10 COPPER SOLID CORE COPPER WIRE WITH GAS AND OIL RESISTANT INSULATION
2. WIRE SHALL BE STRAPPED TO ALL PVC FORCE MAIN PIPING WITH DUCT TAPE AT 12-FT. INTERVALS.
3. SECURE WIRE TO ALL TEE AND CROSS FITTINGS.
4. ALL WIRE SPLICES SHALL HAVE WATER PROOF WIRE CONNECTIONS.

TRACER WIRE DETAIL

NOT TO SCALE

GENERAL NOTES:

1. NO EXCAVATED MATERIAL SHALL BE PLACED IN ANY STREAM, DITCH OR DRAINAGE-WAY.
2. THE CONTRACTOR IS RESPONSIBLE FOR LOCATING ALL UNDERGROUND UTILITIES BEFORE ANY CONSTRUCTION BEGINS.
3. THE CONTRACTOR IS RESPONSIBLE FOR TEMPORARY SEDIMENT AND EROSION CONTROL MEASURES WHILE CONSTRUCTION IS IN PROGRESS.
4. THE CONTRACTOR IS RESPONSIBLE FOR STABILIZATION OF ALL DISTURBED AREAS.
5. THE CONTRACTOR IS RESPONSIBLE FOR LAY DOWN & STOCKPILE AREAS (TO ARRANGE AND INSURE COMPLIANCE WITH ALL LOCAL AND STATE REGULATIONS).

THE DETAILS SHOWN HEREON SUPERCEDE CFPUA WRITTEN TECHNICAL SPECIFICATIONS VERSIONS 1.00 - 1.04

REV:	DESCRIPTION:	DATE:

CFPUA SANITARY SEWER

STANDARD DETAILS

CAPE FEAR PUBLIC UTILITY AUTHORITY
235 GOVERNMENT CENTER DRIVE
WILMINGTON, NC 28403
OFFICE: (910)332-6560
Stewardship. Sustainability. Service.

DATE: 1/9/12
SCALE: N/A
DRAWN BY: CFPUA
CHECKED BY: CFPUA
PROJECT NO. :

SHEET NO: SSD-3

BECKER MORGAN GROUP
ARCHITECTURE PLANNING
Wilmington, NC
3205 Randall Parkway, Suite 211
Wilmington, NC 28403
910.341.7600
Salisbury, MD
312 West Main St. Suite 300
Salisbury, MD 21801
410.546.9100
Dover, DE
309 S Governors Ave
Dover, DE 19904
302.734.7950
www.beckermorgan.com

CATLIN Engineers and Scientists
220 Old Dairy Road
Wilmington, NC 28405
Corporate Licensure No. for Engineering Services C-0585

PROJECT TITLE

CITY OF WILMINGTON FIRE DEPARTMENT

FIRE STATION No. 3
114 CINEMA DRIVE
WILMINGTON, NC 28403

SHEET TITLE

UTILITY DETAILS

ISSUE BLOCK

MARK	DATE	DESCRIPTION
	X	X

PROJECT NO:	2012169.00
DATE:	8/14/2013
SCALE:	
DRAWN BY: BLM, DSL	PROJ MGR: GMJ

C-506

COPYRIGHT © 2013

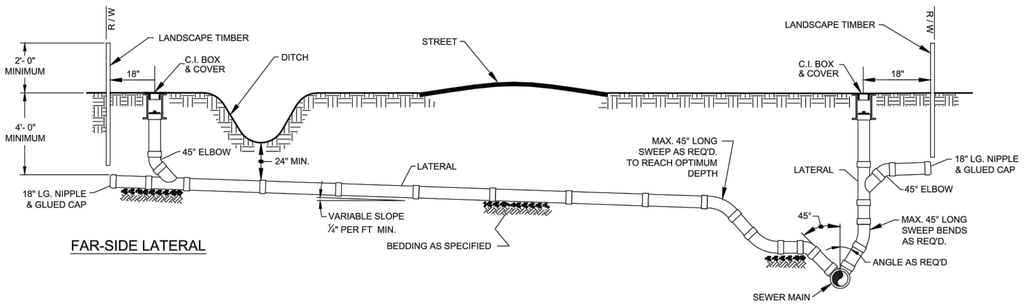

FAR-SIDE LATERAL

NEAR-SIDE LATERAL WITH RIGHT-OF-WAY RESTRICTIONS

NOTE: FOR PRIVATE 8" SERVICES, MANHOLES ARE REQUIRED FOR TIE–IN TO MAIN

STANDARD SERVICE CONNECTION TO SANITARY SEWER

NOT TO SCALE

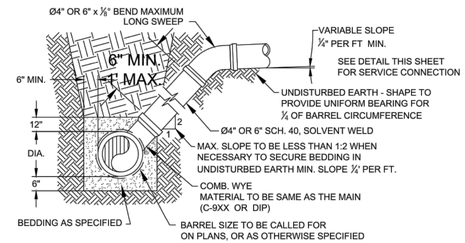

NOTE: FOR PRIVATE 8" SERVICES, MANHOLES ARE REQUIRED FOR TIE–IN TO MAIN

STANDARD SERVICE LATERAL

(MAIN DEPTH LESS THAN 8ft)

NOT TO SCALE

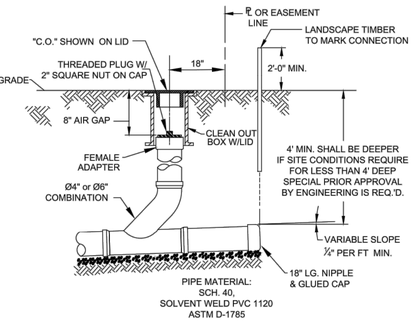

NOTE: FOR PRIVATE 8" SERVICES, MANHOLES ARE REQUIRED FOR TIE–IN TO MAIN

SERVICE CONNECTION & CLEAN-OUT

NOT TO SCALE

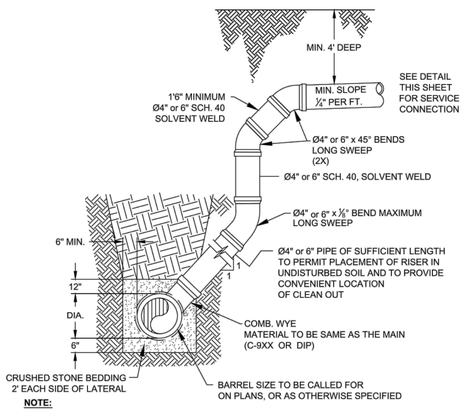

NOTE:
SPECIAL CARE SHALL BE TAKEN DURING BACKFILL OPERATIONS. THE RISER SHALL BE PLUMB AND TRUE AT ALL TIMES, AND REST ON FIRM, STABLE FOUNDATION.

FOR PRIVATE 8" SERVICES, MANHOLES ARE REQUIRED FOR TIE–IN TO MAIN

DEEP SERVICE LATERAL

(MAIN DEPTH GREATER THAN 8ft)

NOT TO SCALE

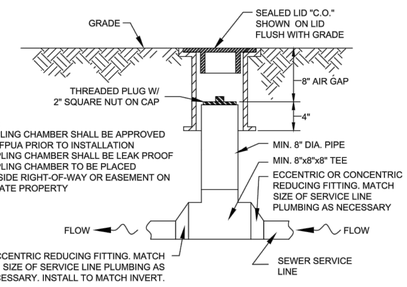

NOTES:
1. SAMPLING CHAMBER SHALL BE APPROVED BY CFPUA PRIOR TO INSTALLATION
2. SAMPLING CHAMBER SHALL BE LEAK PROOF
3. SAMPLING CHAMBER TO BE PLACED OUTSIDE RIGHT-OF-WAY OR EASEMENT ON PRIVATE PROPERTY

SAMPLING CHAMBER

NOT TO SCALE

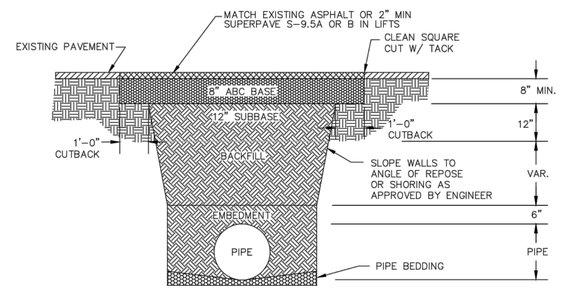

NOTES:
1. BACKFILL SHALL BE SUITABLE MATERIAL THAT IS FREE FROM HEAVY CLAY, GUMBOS, DEBRIS, ORGANICS AND LITTLE TO NO EXCESSIVE MOISTURE.
2. SELECT BACKFILL MAY BE SUBSTITUTED OR REQUIRED BY CITY TO ACHIEVE COMPACTION, (I.E. #57, ABC, CRUSHED LIMESTONE, CLEAN SAND, FLOWABLE FILL, ETC).
3. 8–INCH OF ABC BASE MATERIAL SHALL BE USED ON CITY STREETS.
4. BACKFILL AND BASE MATERIALS SHALL BE COMPACTED 12" MINIMUM LIFTS
5. SOIL SHALL BE COMPACTED BY A MECHANIZED TAMPER (I.E JUMPING JACK), HOWEVER, VIBRATORY ROLLERS > 18" WDTH MAY BE USED FOR LARGER EXCAVATIONS. THE PLATE TAMP METHOD SHALL NOT BE USED.
6. ALL APPROVED CASTINGS SHALL BE SET FLUSH TO GRADE AND SUPPORTED IF APPLICABLE.
7. ABC BASE AND SUBBASE COMPACTED TO 98% AND BACKFILL AND EMBEDMENT COMPACTED TO 90% AS DETERMINED BY THE MODIFIED PROCTOR AASHTO METHOD T–99.
8. 1–FOOT CUTBACKS OF ASPHALT SHALL BE PREPARED ON UNDISTURBED SOIL. MINIMUM ASPHALT DENSITY IS 90%

PAVEMENT REPAIR WHERE PIPE INSTALLED

(FOR PRIVATE ROADS AND PAVED AREAS;
CONTRACTOR TO MEET MIN. REQUIREMENTS AS DEFINED BY
RIGHT-OF-WAY OWNER FOR PUBLIC ROAD REPAIRS)

NOT TO SCALE

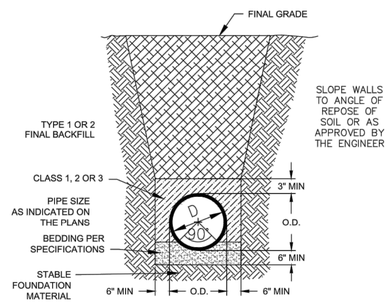

CL 50 DUCTILE IRON DR 18 PVC PIPE TRENCH DETAIL

NOT TO SCALE

NOTE:
PAVEMENT WIDTH AND LOCATION IN R/W VARIES. SEE PLAN FOR INDIVIDUAL LOCATION.

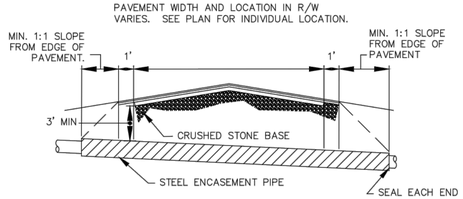

NOTES:
1. CASING WILL BE INSTALLED AT LINE AND GRADE SHOWN ON INDIVIDUAL PROFILE FOR EACH CROSSING. BORING/JACKING TO LINE AND GRADE IS REQUIRED.
2. TRACER WIRE SHALL BE CONTINUED THROUGH CASING

TYPICAL BORING/JACKING DETAIL

NOT TO SCALE

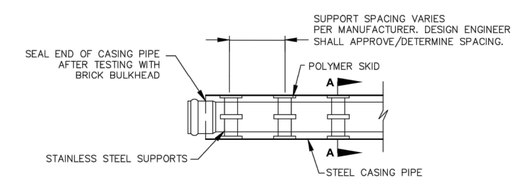

NOTE: PIPE SUPPORT TO BE PLACED TO PROVIDE PROPER SUPPORT, ALIGNMENT, AND GRADE AS SPECIFIED. CONTINUOUS SUPPORTS MAY BE USED AS ALTERNATIVE. OIL, GREASE, OR PETROLEUM PRODUCT MAY NOT BE USED AS LUBRICANT.

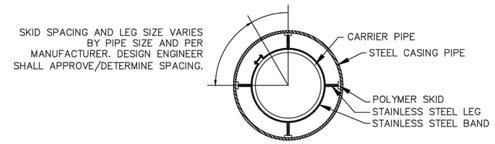

SECTION A-A

NOT TO SCALE

PIPE CASING SUPPORT DETAIL

NOT TO SCALE

GENERAL NOTES:

1. NO EXCAVATED MATERIAL SHALL BE PLACED IN ANY STREAM, DITCH OR DRAINAGE-WAY.
2. THE CONTRACTOR IS RESPONSIBLE FOR LOCATING ALL UNDERGROUND UTILITIES BEFORE ANY CONSTRUCTION BEGINS.
3. THE CONTRACTOR IS RESPONSIBLE FOR TEMPORARY SEDIMENT AND EROSION CONTROL MEASURES WHILE CONSTRUCTION IS IN PROGRESS.
4. THE CONTRACTOR IS RESPONSIBLE FOR STABILIZATION OF ALL DISTURBED AREAS.
5. THE CONTRACTOR IS RESPONSIBLE FOR LAY DOWN & STOCKPILE AREAS (TO ARRANGE AND INSURE COMPLIANCE WITH ALL LOCAL AND STATE REGULATIONS).

THE DETAILS SHOWN HEREON SUPERCEDE CFPUA WRITTEN TECHNICAL SPECIFICATIONS VERSIONS 1.00 - 1.04

REV:	DESCRIPTION:	DATE:
1	SAMPLING CHAMBER REVISED	10/26/12

CFPUA SANITARY SEWER

STANDARD DETAILS

CAPE FEAR PUBLIC UTILITY AUTHORITY
235 GOVERNMENT CENTER DRIVE
WILMINGTON, NC 28403
OFFICE: (910)332-6560
Stewardship. Sustainability. Service.

DATE: 1/9/12
SCALE: N/A
DRAWN BY: CFPUA
CHECKED BY: CFPUA
PROJECT NO. :

SHEET NO: SSD-2

BECKER MORGAN GROUP
ARCHITECTURE PLANNING
Wilmington, NC
3205 Randall Parkway, Suite 211
Wilmington, NC 28403
910.341.7600
Salisbury, MD
312 West Main St. Suite 300
Salisbury, MD 21801
410.546.9100
Dover, DE
309 S Governors Ave
Dover, DE 19904
302.734.7950
www.beckermorgan.com

CATLIN Engineers and Scientists
220 Old Dairy Road
Wilmington, NC 28405
Corporate Licensure No. for Engineering Services C-0585

PROJECT TITLE

CITY OF WILMINGTON FIRE DEPARTMENT

FIRE STATION No. 3
114 CINEMA DRIVE
WILMINGTON, NC 28403

SHEET TITLE

UTILITY DETAILS

ISSUE BLOCK

MARK	DATE	DESCRIPTION
	X	X

PROJECT NO: 2012169.00
DATE: 8/14/2013
SCALE:
DRAWN BY: BLM, DSL | PROJ MGR: GMJ

C-505

COPYRIGHT © 2013

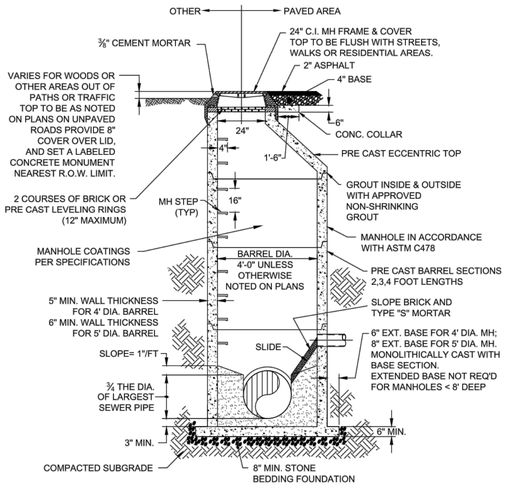

PRECAST CONCRETE OFFSET MANHOLE TYPICAL

(LESS THAN 30" DROP)
NOT TO SCALE

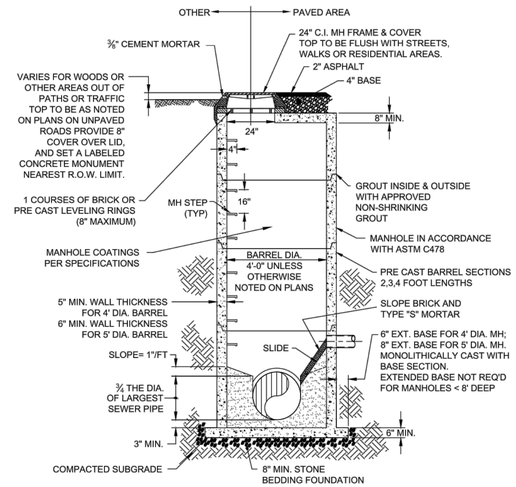

PRECAST CONCRETE FLAT TOP MANHOLE TYPICAL

(LESS THAN 30" DROP)
NOT TO SCALE

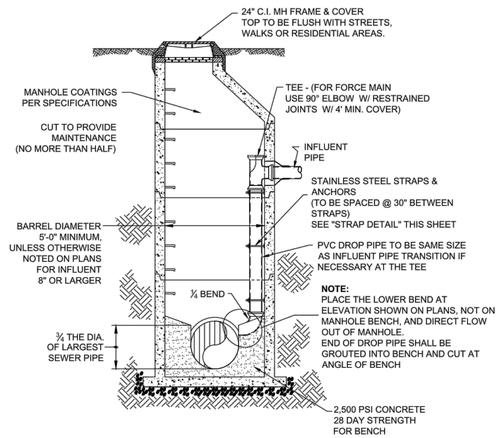

DROP MANHOLE

(MORE THAN 30" DROP)
NOT TO SCALE

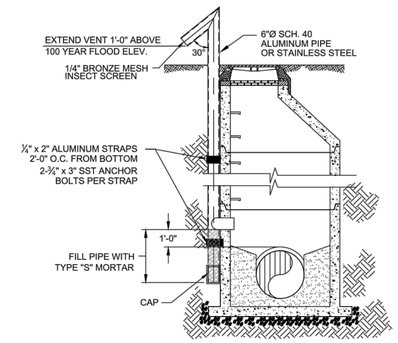

STANDARD VENT MANHOLE

NOT TO SCALE

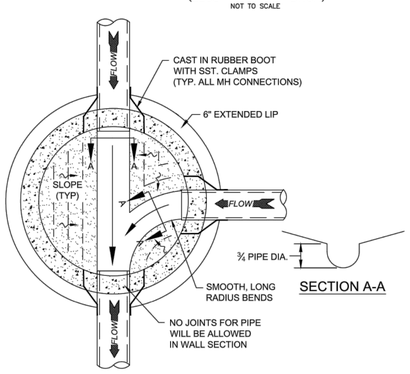

MANHOLE FLOOR PLAN

NOT TO SCALE

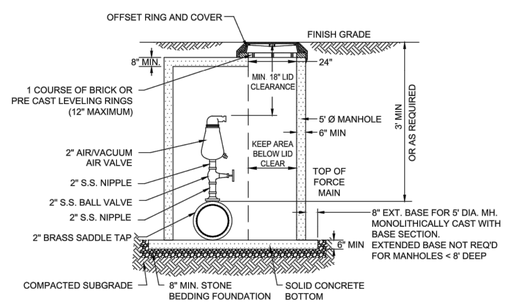

NOTES:
1. CONTRACTOR TO INSTALL VALVE & MANHOLE AT SUFFICIENT DEPTH TO ALLOW FOR ACCESS.
2. FORCE MAIN TO BE OFFSET IN MANHOLE TO KEEP AREA BELOW LID CLEAR.
3. REFER TO SPECIFICATIONS FOR ADDITIONAL DETAILS.
4. USE CAST IN RUBBER BOOT WITH SST. CLAMPS FOR ALL MH CONNECTIONS INCLUDING FORCE MAIN.

AIR / VACUUM AND AIR RELEASE COMBINATION VALVE

NOT TO SCALE

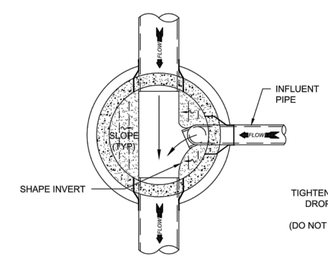

DROP MANHOLE FLOOR PLAN

NOT TO SCALE

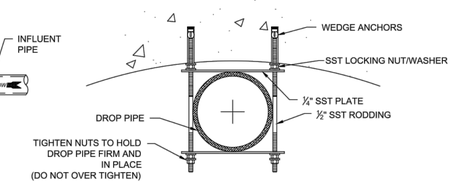

NOTE: ALL PARTS TO BE SST.

STRAP DETAIL

NOT TO SCALE

CAPE FEAR PUBLIC UTILITY AUTHORITY STANDARD SEWER NOTES:

1. SEWER GUARDS REQUIRED AT ALL MANHOLES. STAINLESS STEEL SEWER GUARDS REQUIRED AT MANHOLES LOCATED IN TRAFFIC AREAS.
2. SERVICES SHALL BE PERPENDICULAR TO MAIN AND TERMINATE AT RIGHT-OF-WAY LINE. SERVICES IN CUL-DE-SACS ARE REQUIRED TO BE PERPENDICULAR, OR MUST ORIGINATE IN MANHOLE AND TERMINATE AT RIGHT-OF-WAY LINE.
3. ALL SERVICES TYING INTO DUCTILE IRON MAINS SHALL BE CONSTRUCTED OF CLASS 50, DIP, WITH PROTECTO 401 CERAMIC EPOXY LINING.
4. MINIMUM 10' UTILITIES EASEMENT PROVIDED ALONG THE FRONTAGE OF ALL LOTS AND AS SHOWN FOR NEW DEVELOPMENTS.
5. NO FLEXIBLE COUPLINGS SHALL BE USED.
6. ALL STAINLESS STEEL FASTENERS SHALL BE 316.

STANDARD SEWER NOTES

(REQUIRED ON ALL SEWER PLAN AND PROFILE SHEETS)

GENERAL NOTES:

1. NO EXCAVATED MATERIAL SHALL BE PLACED IN ANY STREAM, DITCH OR DRAINAGE-WAY.
2. THE CONTRACTOR IS RESPONSIBLE FOR LOCATING ALL UNDERGROUND UTILITIES BEFORE ANY CONSTRUCTION BEGINS.
3. THE CONTRACTOR IS RESPONSIBLE FOR TEMPORARY SEDIMENT AND EROSION CONTROL MEASURES WHILE CONSTRUCTION IS IN PROGRESS.
4. THE CONTRACTOR IS RESPONSIBLE FOR STABILIZATION OF ALL DISTURBED AREAS.
5. THE CONTRACTOR IS RESPONSIBLE FOR LAY DOWN & STOCKPILE AREAS (TO ARRANGE AND INSURE COMPLIANCE WITH ALL LOCAL AND STATE REGULATIONS).

THE DETAILS SHOWN HEREON SUPERCEDE CFPUA WRITTEN TECHNICAL SPECIFICATIONS VERSIONS 1.00 - 1.04

REV:	DESCRIPTION:	DATE:
1	AIR / VACUUM AND AIR RELEASE COMBINATION VALVE REVISED	10/26/12
2	STANDARD SEWER NOTE #6 REVISED	12/10/12

CFPUA SANITARY SEWER

STANDARD DETAILS

CAPE FEAR PUBLIC UTILITY AUTHORITY
235 GOVERNMENT CENTER DRIVE
WILMINGTON, NC 28403
OFFICE: (910)332-6560
Stewardship. Sustainability. Service.

DATE: 1/9/12
SCALE: N/A
DRAWN BY: CFPUA
CHECKED BY: CFPUA
PROJECT NO.:

SHEET NO: SSD-1

BECKER MORGAN GROUP
ARCHITECTURE PLANNING
Wilmington, NC
3205 Randall Parkway, Suite 211
Wilmington, NC 28403
910.341.7600
Salisbury, MD
312 West Main St. Suite 300
Salisbury, MD 21801
410.546.9100
Dover, DE
309 S Governors Ave
Dover, DE 19904
302.734.7950
www.beckermorgan.com

CATLIN Engineers and Scientists
220 Old Dairy Road
Wilmington, NC 28405
Corporate Licensure No. for Engineering Services C-0585

PROJECT TITLE

CITY OF WILMINGTON FIRE DEPARTMENT

FIRE STATION No. 3
114 CINEMA DRIVE
WILMINGTON, NC 28403

SHEET TITLE

UTILITY DETAILS

ISSUE BLOCK

MARK	DATE	DESCRIPTION
	X	X

PROJECT NO: 2012169.00
DATE: 8/14/2013
SCALE:
DRAWN BY: BLM, DSL | PROJ MGR: GMJ

C-504

COPYRIGHT © 2013

TAG NUMBER:

SPECIFICATIONS (OS-50)
1. 4" inlet/outlets Sch. 40. (No-Hub)
2. Max flow rate: 50 GPM
3. Liquid capacity: 52 Gallons (7 cu. ft.)
4. Max oil capacity: 34.1 Gallons
5. Sand capacity : 12.5 Gallons
6. Unit weight w/std. covers: 100 lbs.
7. 2,000 lb. load rated, bolted, gas/water tight composite covers.
8. Maximum operating temperature 190˚F continuous.

TeleGlide Riser Order Guide		
Riser Range	OS-50	
	SR24	LR24
0"-3 1/2"	0	0
>3 1/2"-22"	1	0
>22"-37"	0	1

OPTIONS
- ☐ **SR24** -Teleglide short adjustable riser (Qty. = _____)
- ☐ **LR24** - Teleglide long adjustable riser (Qty. = _____)
- ☐ **MPT** - Male pipe thread connections
- ☐ **PS3** - 3" Plain End inlet/outlet connection
- ☐ **C24H** - Highway rated bolted compostie cover
- ☐ **C24HP** - H20 load rated pickable cast iron cover
- ☐ **AK50** - High water table 304 stainless anchor kit
- ☐ **CC-24 -** Clamping collar kit
- ☐ **CS1** - Clean sweep coalescing media
- ☐ **DO2** - 2" oil draw-off connection

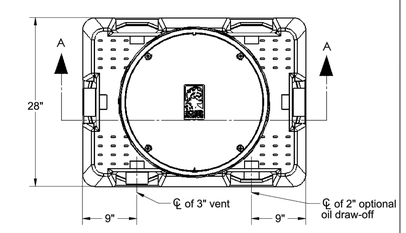

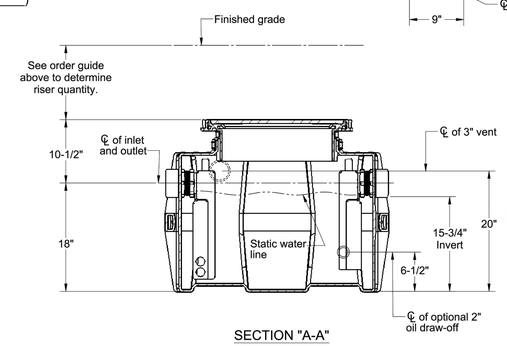

SECTION "A-A"

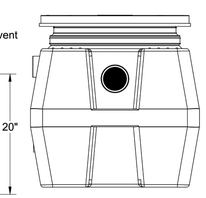

END VIEW

Signature of Approval: _____

Company: _____

Date of Approval: _____

Specifying Engineer: _____

Engineering Firm: _____

PART NUMBER: OS-50

DESCRIPTION:
OIL RESERVE SERIES POLYETHYLENE OIL/SAND SEPARATOR 50 GPM, 52 LIQUID GALLONS, 34.1 GALLON OIL STORAGE

SUBMITTAL SHEET

Schier Products
9500 Woodend Road
Edwardsville, KS 66111
Tel: 800-827-7119
Fax: 800-827-9664
www.schierproducts.com

Made in the U.S.A

SCHIER PRODUCTS
Pioneering Drain Line Purity

DWG BY: TEU	DATE: 1/6/12	REV: 2 - 5/7/13	MATL: PE

grease interceptors | oil separators | solids interceptors | chemical waste tanks | grease systems

PROPRIETARY AND CONFIDENTIAL
THE INFORMATION CONTAINED IN THIS DRAWING IS THE SOLE PROPERTY OF **SCHIER PRODUCTS**. ANY REPRODUCTION IN PART OR AS A WHOLE WITHOUT THE WRITTEN PERMISSION OF **SCHIER PRODUCTS** IS PROHIBITED.

BECKER MORGAN GROUP
ARCHITECTURE PLANNING
Wilmington, NC
3205 Randall Parkway, Suite 211
Wilmington, NC 28403
910.341.7600
Salisbury, MD
312 West Main St. Suite 300
Salisbury, MD 21801
410.546.9100
Dover, DE
309 S Governors Ave
Dover, DE 19904
302.734.7950
www.beckermorgan.com

CATLIN Engineers and Scientists
220 Old Dairy Road
Wilmington, NC 28405
Corporate Licensure No. for Engineering Services C-0585

PROJECT TITLE
CITY OF WILMINGTON FIRE DEPARTMENT
FIRE STATION No. 3
114 CINEMA DRIVE
WILMINGTON, NC 28403

SHEET TITLE
DETAILS

ISSUE BLOCK

MARK	DATE	DESCRIPTION
	X	X

PROJECT NO:	2012169.00
DATE:	8/14/2013
SCALE:	
DRAWN BY: BLM, DSL	PROJ MGR: GMJ

C-503

COPYRIGHT © 2013

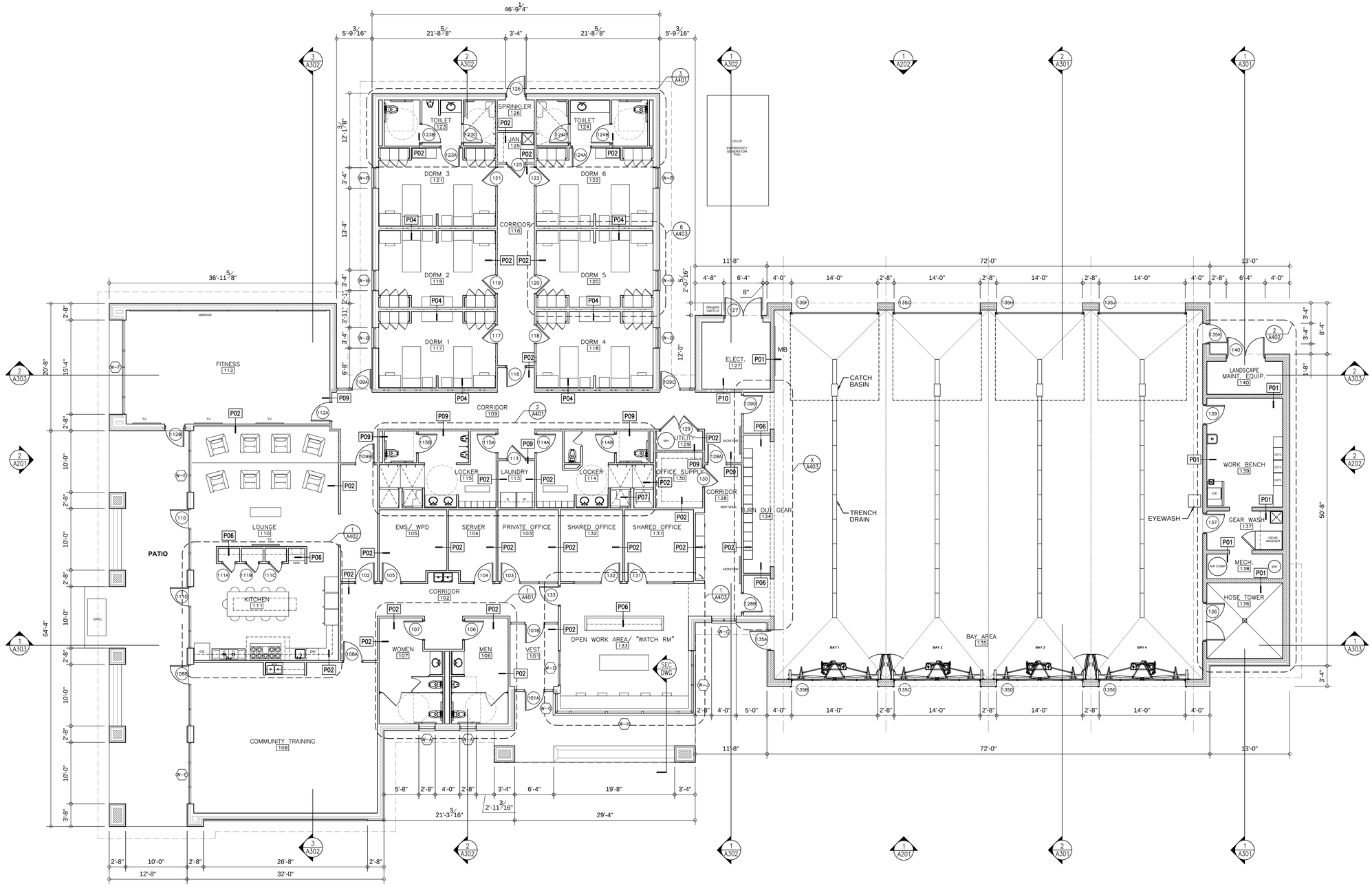

1 A101 FLOOR PLAN

SCALE: 1/8" = 1'-0"

NORTH

BECKER MORGAN GROUP

ARCHITECTURE PLANNING

Wilmington, NC
3205 Randall Parkway, Suite 211
Wilmington, NC 28403
910.341.7600

Salisbury, MD
312 West Main St. Suite 300
Salisbury, MD 21801
410.546.9100

Dover, DE
309 S Governors Ave
Dover, DE 19904
302.734.7950

www.beckermorgan.com

SCHEMATIC PRICING SET
NOT FOR CONSTRUCTION

PROJECT TITLE

CITY OF WILMINGTON FIRE DEPARTMENT

FIRE STATION No. 3
114 CINEMA DRIVE
WILMINGTON, NC 28403

SHEET TITLE

FLOOR PLAN

ISSUE BLOCK

MARK	DATE	DESCRIPTION
	X	X

PROJECT NO:	2012169.00
DATE:	9/17/2013
SCALE:	
DRAWN BY: LML, KAG	PROJ MGR: LML

A101

COPYRIGHT © 2013

2 NORTH ELEVATION
A202 SCALE: 1/8" = 1'-0"

1 WEST ELEVATION
A202 SCALE: 1/8" = 1'-0"

01 BRICK VENEER
02 BRICK ROWLOCK
03 MANUFACTURED STONE UNITS
04 ALUMINUM DOOR & FRAME SYSTEM
05 CAST STONE
06 METAL CLADDING
07 STANDING SEAM METAL ROOF
08 CITY OF WILMINGTON FIRE DEPARTMENT SIGNAGE
09 ALUMINUM WINDOW FRAME SYSTEM
10 PRECAST LINTEL
11 FIRE HOUSE NUMBER SIGNAGE
12 BI-FOLD HIGH SPEED DOORS
13 LIGHTING FIXTURE (SEE ELECTRICAL)
14 SOLDIER COURSE
15 METAL COPING
16 PRECAST CAP
17 LOUVERS
18 OVERHEAD GARAGE DOOR
19 GUTTERS & DOWNSPOUTS
20 CALCIUM SILICATE MASONRY UNITS

BECKER MORGAN GROUP
ARCHITECTURE PLANNING
Wilmington, NC
3205 Randall Parkway, Suite 211
Wilmington, NC 28403
910.341.7600
Salisbury, MD
312 West Main St. Suite 300
Salisbury, MD 21801
410.546.9100
Dover, DE
309 S Governors Ave
Dover, DE 19904
302.734.7950
www.beckermorgan.com

SCHEMATIC PRICING SET
NOT FOR CONSTRUCTION

PROJECT TITLE
CITY OF WILMINGTON FIRE DEPARTMENT
FIRE STATION No. 3
114 CINEMA DRIVE
WILMINGTON, NC 28403

SHEET TITLE
BUILDING ELEVATIONS

ISSUE BLOCK

MARK	DATE	DESCRIPTION
	X	X

PROJECT NO: 2012169.00
DATE: 9/17/2013
SCALE:
DRAWN BY: LML, KAG PROJ MGR: LML

A202

COPYRIGHT © 2013

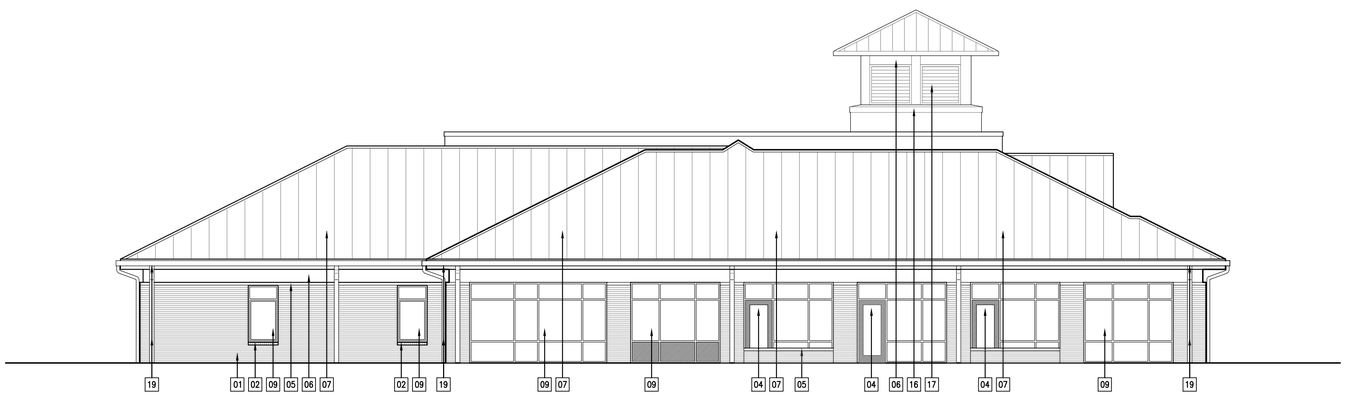

2 A201 SOUTH ELEVATION

SCALE: 1/8" = 1'-0"

01 BRICK VENEER
02 BRICK ROWLOCK
03 MANUFACTURED STONE UNITS
04 ALUMINUM DOOR & FRAME SYSTEM
05 CAST STONE
06 METAL CLADDING
07 STANDING SEAM METAL ROOF
08 CITY OF WILMINGTON FIRE DEPARTMENT SIGNAGE
09 ALUMINUM WINDOW FRAME SYSTEM
10 PRECAST LINTEL
11 FIRE HOUSE NUMBER SIGNAGE
12 BI-FOLD HIGH SPEED DOORS
13 LIGHTING FIXTURE (SEE ELECTRICAL)
14 SOLDIER COURSE
15 METAL COPING
16 PRECAST CAP
17 LOUVERS
18 OVERHEAD GARAGE DOOR
19 GUTTERS & DOWNSPOUTS
20 CALCIUM SILICATE MASONRY UNITS

1 A201 EAST ELEVATION

SCALE: 1/8" = 1'-0"

BECKER MORGAN GROUP

ARCHITECTURE
PLANNING

Wilmington, NC
3205 Randall Parkway, Suite 211
Wilmington, NC 28403
910.341.7600

Salisbury, MD
312 West Main St. Suite 300
Salisbury, MD 21801
410.546.9100

Dover, DE
309 S Governors Ave
Dover, DE 19904
302.734.7950

www.beckermorgan.com

SCHEMATIC PRICING SET
NOT FOR CONSTRUCTION

PROJECT TITLE

CITY OF WILMINGTON FIRE DEPARTMENT

FIRE STATION No. 3
114 CINEMA DRIVE
WILMINGTON, NC 28403

SHEET TITLE

BUILDING ELEVATIONS

ISSUE BLOCK

MARK	DATE	DESCRIPTION
	X	X

PROJECT NO: 2012169.00
DATE: 9/17/2013
SCALE:
DRAWN BY: LML, KAG | PROJ MGR: LML

A201

COPYRIGHT © 2013