NOTES:
1) CONTRACTOR SHALL FIELD VERIFY SIZE, MATERIAL, INVERTS AND LOCATION OF ALL EXISTING UTILITIES PRIOR TO INSTALLATION OF PROPOSED CONNECTIONS.
2) TACTILE WARNING MATS ARE TO BE INSTALLED ON ALL WHEELCHAIR RAMPS.
3) ALL PAVEMENT MARKINGS IN PUBLIC RIGHTS–OF–WAY AND FOR DRIVEWAYS ARE TO BE THERMOPLASTIC AND MEET CITY AND/OR NCDOT STANDARDS.
4) ALL TRAFFIC CONTROL SIGNS AND MARKINGS OFF THE RIGHT–OF–WAY ARE TO BE MAINTAINED BY THE PROPERTY OWNER IN ACCORDANCE WITH MUTCD STANDARDS.
5) ALL PARKING STALL MARKINGS AND LANE ARROWS WITHIN THE PARKING AREAS SHALL BE WHITE.
6) ALL SIGNS AND PAVEMENT MARKINGS IN AREAS OPEN TO PUBLIC TRAFFIC ARE TO MEET MUTCD (MANUAL ON UNIFORM TRAFFIC CONTROL DEVICES) STANDARDS.
7) A UTILITY CUT PERMIT IS REQUIRED FOR EACH OPEN CUT OF A CITY STREET. CONTACT 341–5888 FOR MORE DETAILS. IN CERTAIN CASES AN ENTIRE RESURFACING OF THE AREA BEING OPEN CUT MAY BE REQUIRED.
8) INSTALL REFLECTORS PER CITY AND NCDOT STANDARDS. TRAFFIC ENGINEERING MUST APPROVE OF PAVEMENT MARKING LAYOUT PRIOR TO ACTUAL STRIPING.
9) CONTACT TRAFFIC ENGINEERING AT 341–7888 FORTY–EIGHT HOURS PRIOR TO ANY EXCAVATION IN THE RIGHT OF WAY.
10) PRIOR TO ANY CLEARING, GRADING, OR CONSTRUCTION ACTIVITY, TREE PROTECTION FENCING WILL BE INSTALLED AROUND PROTECTED TREES OR GROVES OF TREES.
11) NO CONSTRUCTION WORKERS, TOOLS MATERIALS OR VEHICLES ARE PERMITTED WITHIN THE TREE PROTECTION FENCING.
12) ALL PROPOSED VEGETATION WITHIN THE SIGHT TRIANGLES SHALL NOT INTERFERE WITH CLEAR VISUAL SIGHT LINES FROM 30"–10'.
12) SITE LIGHTING WILL NOT SHINE ONTO ADJACENT RESIDENTIALLY ZONED OR USED PROPERTIES.
13) NO WETLANDS EXIST ON SITE.
14) ALL ROOF DRAINS WILL BE DIRECTED TO THE STORMWATER COLLECTION SYSTEM.
15) NO TREES LOCATED WITHIN THE LIMITS OF DISTURBANCE.
16) DUMPSTER SCREENING TO BE 6' IN HEIGHT ALONG FRONT SIDE OF LOT AND 8' IN HEIGHT ALONG THE SIDE OR REAR PROPERTY LINE.

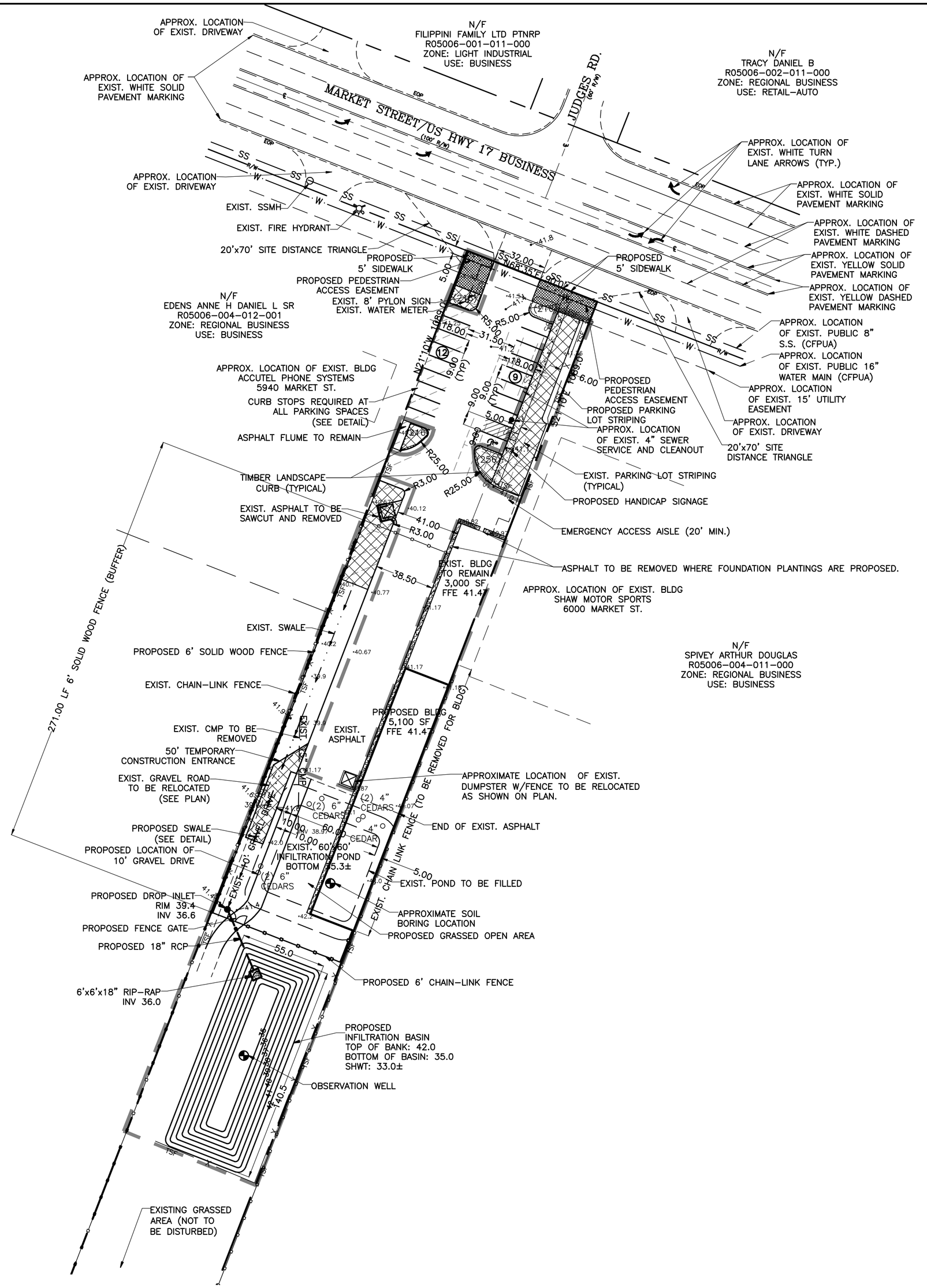

SITE DATA:

PROPERTY OWNER:	LEWIS PROPERTIES OF WILMINGTON, LLC
PROJECT ADDRESS:	5942 MARKET ST.
PIN NUMBER:	R05006–004–012–000
LATITUDE & LONGITUDE:	N34°15'05" W77°51'15"
AREA NOT IN A FEMA 100–YEAR FLOOD ZONE.	
ZONING DISTRICT:	RB–REGIONAL BUSINESS
DISTURBED AREA	.95 AC
CAMA LAND USE:	UBRAN
REQUIRED BUILDING SETBACKS	FRONT: 25' REAR: 15' SIDE: 0'
PROPOSED BUILDING SETBACKS	FRONT: 165' REAR: 653' SIDE: 0'/60'
TRACT AREA	98,009 SF (2.24 AC)
BUILDING USE	SHOOTING RANGE
EXISTING BUILDING AREA	3,000 SF
PROPOSED BUILDING AREA (GROSS)	5,100 SF
BUILDING LOT COVERAGE (8,100/98,009)	8.3%
NUMBER OF BUILDINGS	1
NUMBER OF UNITS	1
BUILDING HEIGHT	18'
NUMBER OF STORIES	1

EXISTING IMPERVIOUS AREAS:	
EXISTING BUILDING	3,000 SF
EXISTING GRAVEL ROAD	4,555 SF
EXISTING ASPHALT	22,025 SF
EXISTING ASPHALT TO BE REMOVED	4,705 SF
EXISTING ASPHALT TO REMAIN	17,320 SF
EXISTING IMPERVIOUS AREAS	24,875 SF (25.4%)

PROPOSED IMPERVIOUS AREAS: (ON–SITE)	
PROPOSED BUILDING FOOTPRINT	5,100 SF
PROPOSED ASPHALT + CURB	0 SF
PROPOSED CONCRETE (SIDEWALK/DUMPSTER)	1,115 SF
FUTURE ON–SITE IMPERVIOUS	450 SF
PROPOSED IMPERVIOUS AREA	6,665 SF (6.8%)
PROPOSED + EXISTING IMPERVIOUS AREA	31,540 SF (32.2%)

PARKING REQUIRED: (PRIVATE RECREATION)	
MINIMUM: 1/400 (8,100/400)	21 SPACES
MAXIMUM: 1/400 (8,100/200)	41 SPACES
PARKING PROVIDED:	21 SPACES
HANDICAP SPOTS REQUIRED (1–25 SPOTS= 1 HANDICAP SPOT) 24 SPOTS/25=.96	PROPOSED 1 HANIDCAP SPOT

PUBLIC WATER AND SEWER BY CFPUA	
EXISTING WATER FLOW:	330 GPD
EXISTING SEWER FLOW:	300 GPD
PROPOSED WATER FLOW: (100 GPD/1,000 SF x 8,100 x 110%)	891 GPD
PROPOSED SEWER FLOW: (100 GPD/1000 SF x 8,100 SF)	810 GPD

*NOTE: NO INCREASE IN EXISTING WATER OR SEWER SERVICE PIPE SIZE TO BUILDING.

TOTAL ASPHALT+CURB	17,915 SF
20% INTERIOR SHADING REQUIRED	3,583 SF
INTERIOR SHADING PROVIDED	4,242 SF

LEGEND

- EXIST. SPOT ELEVATION (×31.73)
- PROPOSED SPOT ELEVATION (←31.2)
- PROPERTY LINE (BOUNDARY)
- RIGHT OF WAY
- LIMITS OF DISTURBANCE
- TEMPORARY SILT FENCE (TSF X TSF)
- EXIST. CHAIN LINK FENCE
- PROPOSED 6' SOLID WOOD FENCE
- PROPOSED RUN–OFF ARROWS
- EXIST. CONCRETE AREA
- PROPOSED CONCRETE AREA
- DEMO
- STREETYARD
- FOUNDATION PLANTINGS

SITE PLAN
BAR SCALE 1"=40'

40' 20' 0' 40' 80' 120'

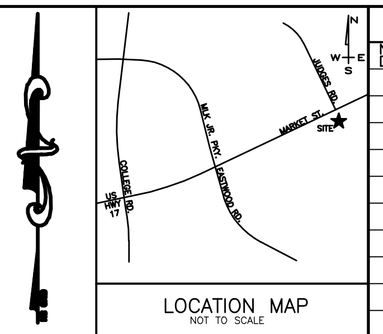

LOCATION MAP
NOT TO SCALE

REVISIONS		
No./ Date	Description	By

BULLZEYE SHOOTING SPORTS
SITE, GRADING, DRAINAGE, EROSION CONTROL, STORMWATER MANAGEMENT, AND UTILITY PLAN
WILMINGTON, NORTH CAROLINA

TRIPP ENGINEERING, P.C.
419 Chestnut Street
Wilmington, North Carolina 28401
Phone 910–763–5100
Fax 910–763–5631

© 2012 TRIPP ENGINEERING, P.C.
NC LICENSE No. C–1427

DATE 02–11–13
DESIGN PGT
DRAWN EJW

C1
SHEET 1 OF 3
12029

Approved Construction Plan

	Name	Date
Planning		
Traffic		
Fire		

CITY OF WILMINGTON NORTH CAROLINA
Public Services • Engineering Division
APPROVED DRAINAGE PLAN
Date:_____ Permit #_____
Signed: _____

For each open utility cut of City streets, a $325 permit shall be required from the City prior to occupancy and/or project acceptance.

NOTES:
1) CONTRACTOR SHALL FIELD VERIFY SIZE, MATERIAL, INVERTS AND LOCATION OF ALL EXISTING UTILITIES PRIOR TO INSTALLATION OF PROPOSED CONNECTIONS.
2) TACTILE WARNING MATS ARE TO BE INSTALLED ON ALL WHEELCHAIR RAMPS.
3) ALL PAVEMENT MARKINGS IN PUBLIC RIGHTS-OF-WAY AND FOR DRIVEWAYS ARE TO BE THERMOPLASTIC AND MEET CITY AND/OR NCDOT STANDARDS.
4) ALL TRAFFIC CONTROL SIGNS AND MARKINGS OFF THE RIGHT-OF-WAY ARE TO BE MAINTAINED BY THE PROPERTY OWNER IN ACCORDANCE WITH MUTCD STANDARDS.
5) ALL PARKING STALL MARKINGS AND LANE ARROWS WITHIN THE PARKING AREAS SHALL BE WHITE.
6) ALL SIGNS AND PAVEMENT MARKINGS IN AREAS OPEN TO PUBLIC TRAFFIC ARE TO MEET MUTCD (MANUAL ON UNIFORM TRAFFIC CONTROL DEVICES) STANDARDS.
7) A UTILITY CUT PERMIT IS REQUIRED FOR EACH OPEN CUT OF A CITY STREET. CONTACT 341-5888 FOR MORE DETAILS. IN CERTAIN CASES AN ENTIRE RESURFACING OF THE AREA BEING OPEN CUT MAY BE REQUIRED.
8) INSTALL REFLECTORS PER CITY AND NCDOT STANDARDS. TRAFFIC ENGINEERING MUST APPROVE OF PAVEMENT MARKING LAYOUT PRIOR TO ACTUAL STRIPING.
9) CONTACT TRAFFIC ENGINEERING AT 341-7888 FORTY-EIGHT HOURS PRIOR TO ANY EXCAVATION IN THE RIGHT OF WAY.
10) PRIOR TO ANY CLEARING, GRADING, OR CONSTRUCTION ACTIVITY, TREE PROTECTION FENCING WILL BE INSTALLED AROUND PROTECTED TREES OR GROVES OF TREES.
11) NO CONSTRUCTION WORKERS, TOOLS MATERIALS OR VEHICLES ARE PERMITTED WITHIN THE TREE PROTECTION FENCING.
12) ALL PROPOSED VEGETATION WITHIN THE SIGHT TRIANGLES SHALL NOT INTERFERE WITH CLEAR VISUAL SIGHT LINES FROM 30"-10'.
13) NO WETLANDS EXIST ON SITE.
14) ALL ROOF DRAINS WILL BE DIRECTED TO THE STORMWATER COLLECTION SYSTEM.
15) DUMPSTER SCREENING TO BE 6' IN HEIGHT ALONG FRONT SIDE OF LOT AND 8' IN HEIGHT ALONG THE SIDE OR REAR PROPERTY LINE.

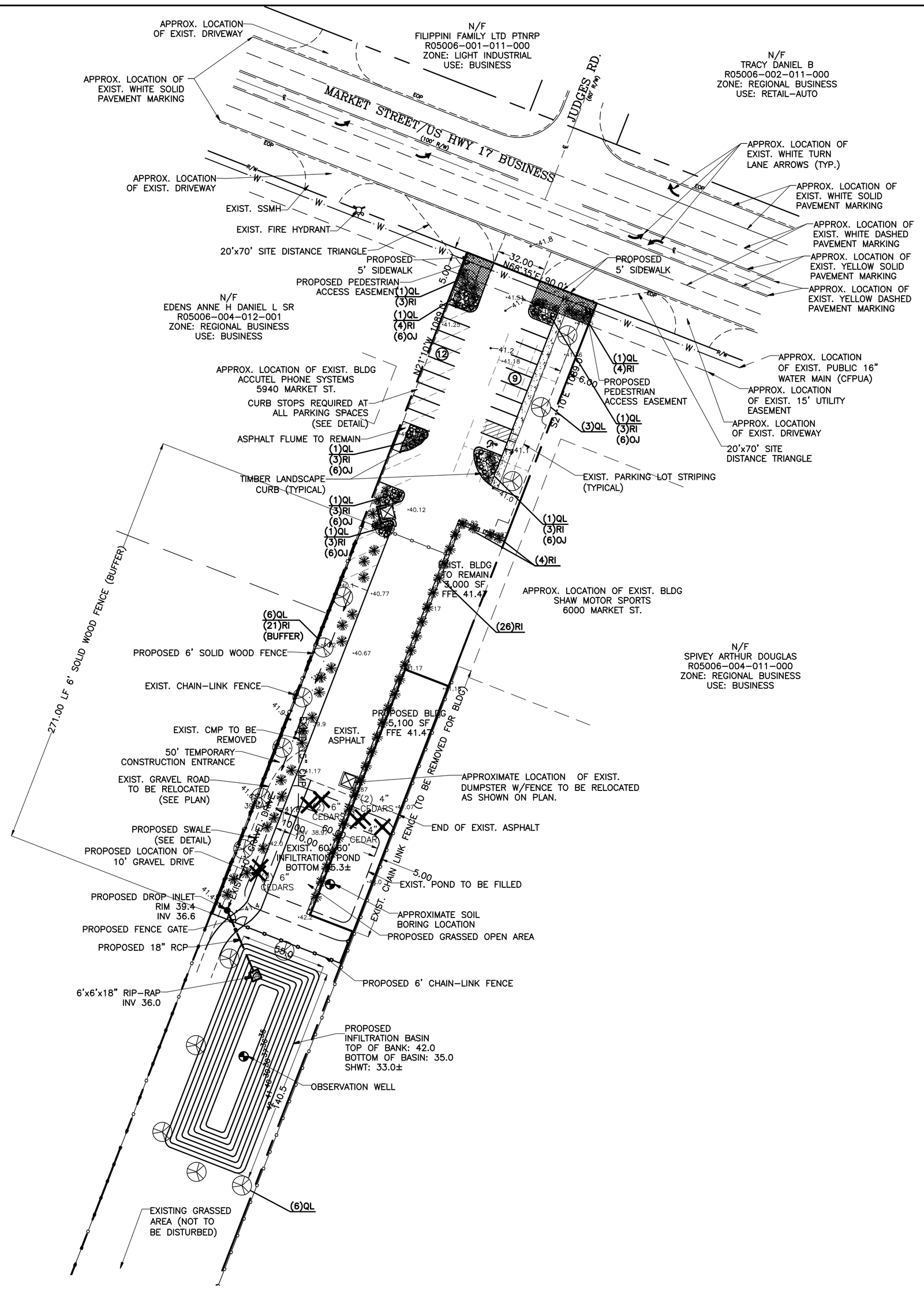

SITE DATA:

PROPERTY OWNER: LEWIS PROPERTIES OF WILMINGTON, LLC	
PROJECT ADDRESS:	5942 MARKET ST.
PIN NUMBER:	R05006-004-012-000
LATITUDE & LONGITUDE:	N34°15'05" W77°51'15"
AREA NOT IN A FEMA 100-YEAR FLOOD ZONE.	
ZONING DISTRICT:	RB-REGIONAL BUSINESS
DISTURBED AREA	.95 AC
CAMA LAND USE:	UBRAN
REQUIRED BUILDING SETBACKS	FRONT: 25' REAR: 15' SIDE: 0'
PROPOSED BUILDING SETBACKS	FRONT: 165' REAR: 653' SIDE: 0'/60'
TRACT AREA	98,009 SF (2.24 AC)
BUILDING USE	SHOOTING RANGE
EXISTING BUILDING AREA	3,000 SF
PROPOSED BUILDING AREA (GROSS)	5,100 SF
BUILDING LOT COVERAGE (8,100/98,009)	8.3%
NUMBER OF BUILDINGS	1
NUMBER OF UNITS	1
BUILDING HEIGHT	18'
NUMBER OF STORIES	1
EXISTING IMPERVIOUS AREAS:	
EXISTING BUILDING	3,000 SF
EXISTING GRAVEL ROAD	4,555 SF
EXISTING ASPHALT	22,025 SF
EXISTING ASPHALT TO BE REMOVED	4,705 SF
EXISTING ASPHALT TO REMAIN	17,320 SF
EXISTING IMPERVIOUS AREAS	24,875 SF (25.4%)
PROPOSED IMPERVIOUS AREAS: (ON-SITE)	
PROPOSED BUILDING FOOTPRINT	5,100 SF
PROPOSED ASPHALT + CURB	0 SF
PROPOSED CONCRETE (SIDEWALK/DUMPSTER)	1,115 SF
FUTURE ON-SITE IMPERVIOUS	450 SF
PROPOSED IMPERVIOUS AREA	6,665 SF (6.8%)
PROPOSED + EXISTING IMPERVIOUS AREA	31,540 SF (32.2%)

PARKING REQUIRED: (PRIVATE RECREATION)	
MINIMUM: 1/400 (8,100/400)	21 SPACES
MAXIMUM: 1/400 (8,100/200)	41 SPACES
PARKING PROVIDED:	21 SPACES
HANDICAP SPOTS REQUIRED (1-25 SPOTS= 1 HANDICAP SPOT) 24 SPOTS/25=.96	PROPOSED 1 HANIDCAP SPOT
PUBLIC WATER AND SEWER BY CFPUA	
EXISTING WATER FLOW:	330 GPD
EXISTING SEWER FLOW:	300 GPD
PROPOSED WATER FLOW: (100 GPD/1,000 SF x 8,100 x 110%)	891 GPD
PROPOSED SEWER FLOW: (100 GPD/1000 SF x 8,100 SF)	810 GPD

*NOTE: NO INCREASE IN EXISTING WATER OR SEWER SERVICE PIPE SIZE TO BUILDING.

TOTAL ASPHALT+CURB	17,915 SF
20% INTERIOR SHADING REQUIRED	3,583 SF
INTERIOR SHADING PROVIDED	4,242 SF

TOTAL ASPHALT+CURB	17,320 SF
20% INTERIOR SHADING REQUIRED	3,464 SF
INTERIOR SHADING PROVIDED (6 INTERIOR ISLAND TREES @707 SF EA.)	4,242 SF

PROPOSED PLANT LIST

O.C. - "ON CENTER" CAL. - "CALIPER AT 6" ABOVE GRADE" GAL. - "GALLON CONTAINER"

KEY	NO.	TYPE	COMMON NAME	SCIENTIFIC NAME	MIN. SIZE	PLANTING REMARKS
QL	23	LARGE SHADE TREE	LAUREL OAK	QUERCUS LAURIFOLIA	2" CAL.	AS SHOWN
RI	56	SHRUB	INDIAN HAWTHORNE	RAPHIOLEPIS INDICA	1 GAL.	AS SHOWN
OJ	36	GROUND COVER	MONDO GRASS	OPHIOPOGON JAPONICUS	1 GAL.	AS SHOWN
RI	21	SHRUB	INDIAN HAWTHORNE	RAPHIOLEPIS INDICA	3' HEIGHT	LOCATED IN BUFFERYARD

	REQUIRED	PROPOSED
STREETYARD (MARKET): 90-35.43*25/2= 682 SF	2 TREE(S) 7 SHRUB(S)	2 TREE(S) 7 SHRUB(S)
DISTURBED AREA: .95 Ac. (15 TREES PER DISTURBED ACRE)	15 TREES	15 TREES
FOUNDATION PLANTINGS: (NORTH) 30x18x12%	65 SF	74 SF (SEE PLAN)
FOUNDATION PLANTINGS: (WEST) 270x18x12%	583 SF	675 SF (SEE PLAN)

LEGEND

- EXIST. SPOT ELEVATION (×31.73)
- PROPOSED SPOT ELEVATION (31.2)
- PROPERTY LINE (BOUNDARY)
- RIGHT OF WAY
- LIMITS OF DISTURBANCE
- TEMPORARY SILT FENCE (TSF X TSF)
- PROPOSED RUN-OFF ARROWS
- EXIST. CONCRETE AREA
- PROPOSED CONCRETE AREA
- DEMO
- EXIST. TREES
- TREES TO BE REMOVED

SITE PLAN
BAR SCALE 1"=40'
40' 20' 0' 40' 80' 120'

Approved Construction Plan

	Name	Date
Planning		
Traffic		
Fire		

CITY OF WILMINGTON NORTH CAROLINA
Public Services • Engineering Division
APPROVED DRAINAGE PLAN
Date:_____ Permit #_____
Signed: _____

For each open utility cut of City streets, a $325 permit shall be required from the City prior to occupancy and/or project acceptance.

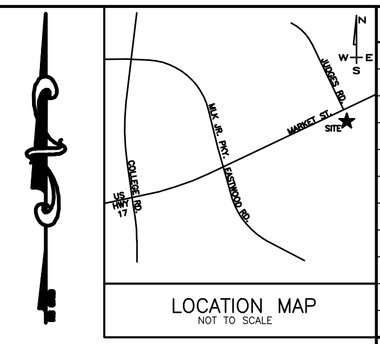

LOCATION MAP
NOT TO SCALE

REVISIONS		
No./Date	Description	By

BULLZEYE SHOOTING SPORTS
WILMINGTON, NORTH CAROLINA

LANDSCAPE PLAN

TRIPP ENGINEERING, P.C.
419 Chestnut Street
Wilmington, North Carolina 28401
Phone 910-763-5100
Fax 910-763-5631

© 2012 TRIPP ENGINEERING, P.C.
NC LICENSE NO: C-1427

DATE 02-11-13
DESIGN PGT
DRAWN EJW

L1

12029

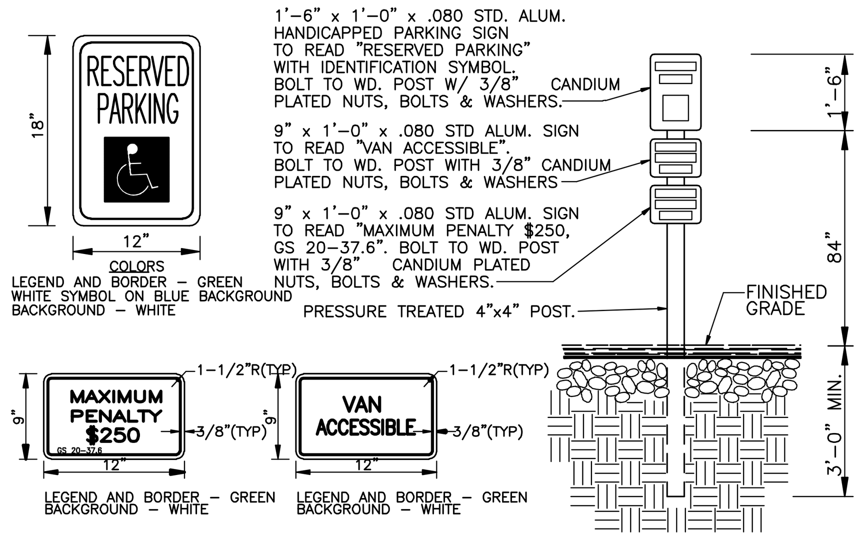

TYPICAL HANDICAPPED SIGN DETAIL

NTS

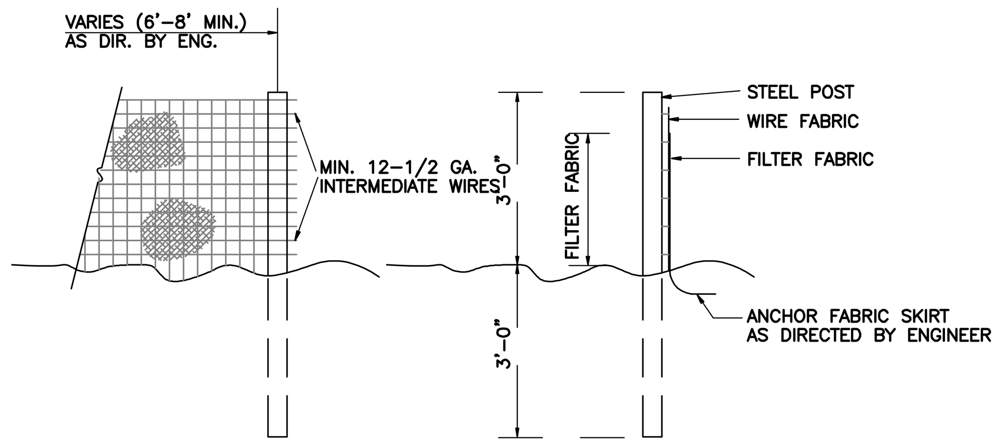

NOTES:

1. FENCE FABRIC SHALL BE A MIN. OF 32" IN WIDTH AND SHALL HAVE A MIN. OF SIX LINE WIRES WITH 12" STAY SPACING.
2. FABRIC SHALL BE FOR EROSION CONTROL AND MIN. OF 36" IN WIDTH. FABRIC SHALL BE FASTENED ADEQUATELY TO THE WIRE FABRIC AS DIRECTED BY THE ENGINEER.
3. STEEL POST SHALL BE 5'-0" IN HEIGHT AND BE OF THE SELF-FASTENER STEEL ANGLE TYPE.

TEMPORARY SILT FENCE

NTS

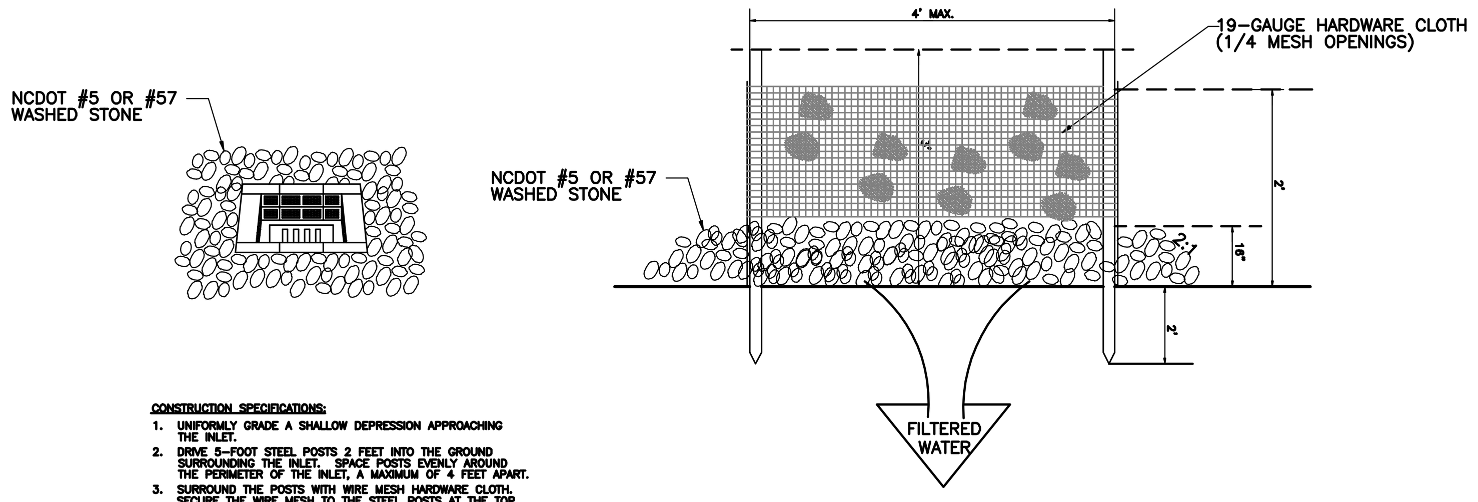

CONSTRUCTION SPECIFICATIONS:

1. UNIFORMLY GRADE A SHALLOW DEPRESSION APPROACHING THE INLET.
2. DRIVE 5-FOOT STEEL POSTS 2 FEET INTO THE GROUND SURROUNDING THE INLET. SPACE POSTS EVENLY AROUND THE PERIMETER OF THE INLET, A MAXIMUM OF 4 FEET APART.
3. SURROUND THE POSTS WITH WIRE MESH HARDWARE CLOTH. SECURE THE WIRE MESH TO THE STEEL POSTS AT THE TOP, MIDDLE, AND BOTTOM. PLACINGA 2-FOOT FLAP OF WIRE MESH UNDER THE GRAVEL FOR ANCHORING IS RECOMMENDED.
4. PLACE CLEAN GRAVEL (NCDOT #5 OR #57 STONE) ON A 2:1 SLOPE WITH A HEIGHT OF 16 INCHES AROUND THE WIRE, AND SMOOTH TO AN EVEN GRADE.
5. ONCE THE CONTRIBUTING DRAINAGE AREA HAS BEEN STABILIZED, REMOVE ACCUMULATED SEDIMENT, AND ESTABLISH FINAL GRADING ELEVATIONS.
6. COMPACT THE AREA PROPERLY AND STABILIZED IT WITH GROUNDCOVER.

MAINTENANCE:

INSPECT INLETS AT LEAST WEEKLY AND AFTER EACH SIGNIFICANT (½ INCH OR GREATER) RAINFALL EVENT. CLEAR THE MESH WIRE OF ANY DEBRIS OR OTHER OBJECTS TO PROVIDE ADEQUATE FLOW FOR SUBSEQUENT RAINS. TAKE CARE NOT TO DAMAGE OR UNDERCUT THE WIRE MESH DURING SEDIMENT REMOVAL. REPLACE STONE AS NEEDED.

HARDWARE CLOTH AND GRAVEL INLET PROTECTION

NTS

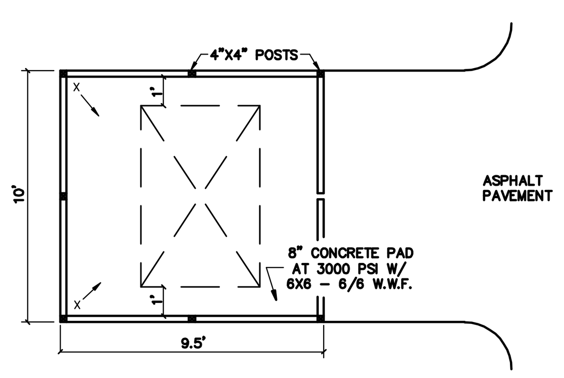

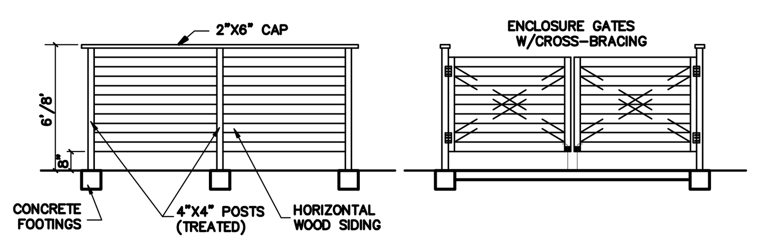

NOTE: DUMPSTER HEIGHT TO BE 6' IN HEIGHT ALONG THE FRONT OR CORNER SIDE OF LOT AND 8' IN HEIGHT ALONG SIDE OR REAR PROPERTY LINE.

DUMPSTER PAD & ENCLOSURE DETAIL

NTS

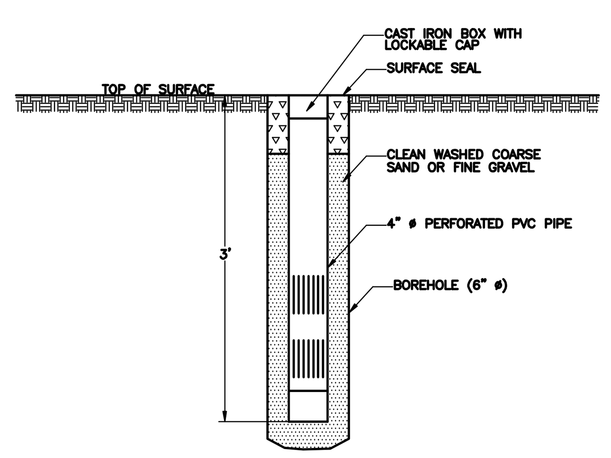

OBSERVATION WELL DETAIL

NTS

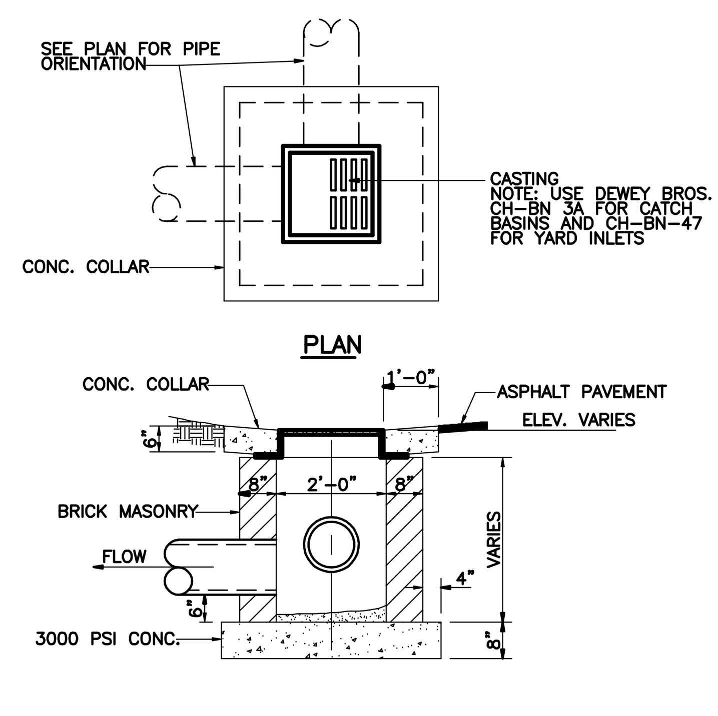

DROP INLET DETAIL

NTS

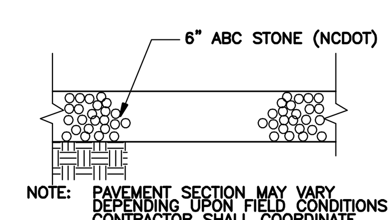

NOTE: PAVEMENT SECTION MAY VARY DEPENDING UPON FIELD CONDITIONS. CONTRACTOR SHALL COORDINATE W/OWNER & GEOTECHNICAL ENGINEER TO DETERMINE ACTUAL PAVEMENT SECTION.

GRAVEL ROAD SECTION

NTS

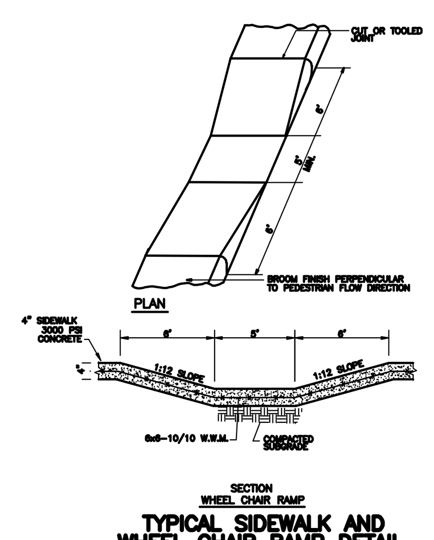

TYPICAL SIDEWALK AND WHEEL CHAIR RAMP DETAIL

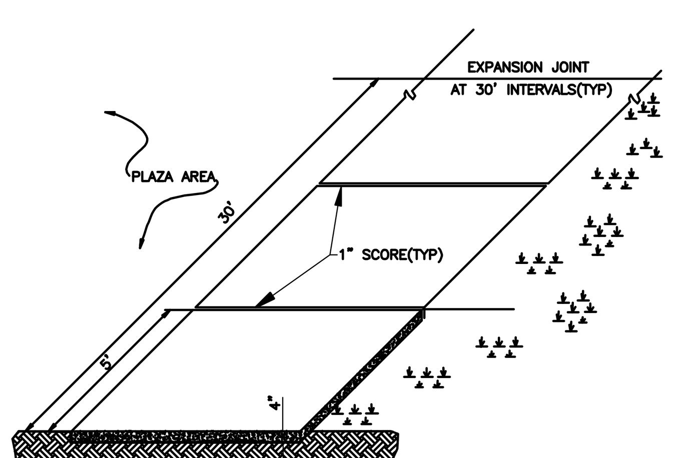

STANDARD SIDEWALK DETAIL

SD 8-15

NOT TO SCALE

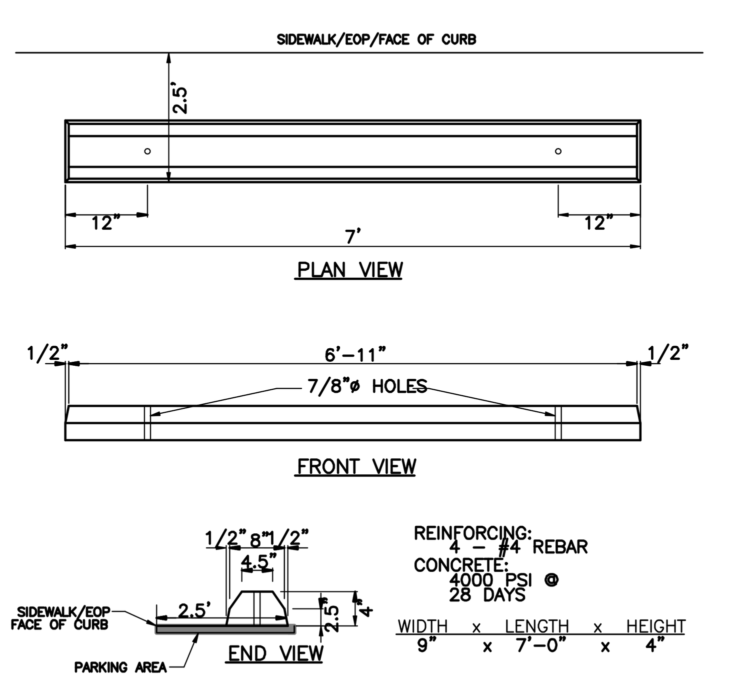

NOTE: WHEEL STOP NOT TO EXCEED 4" IN HEIGHT.

WHEEL STOP DETAIL

NTS

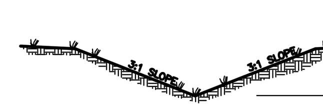

TYPICAL GRASS SWALE

NTS

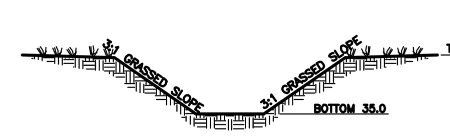

NOTE: 4" OF CLEAN SAND TO BE PLACED IN BOTTOM OF INFILTRATION BASIN AT ELEVATION 34.67.

INFILTRATION BASIN DETAIL

NTS

NOTES:

1. SIDEWALK THICKNESS SHALL BE 4" UNLESS NOTED OTHERWISE.
2. CONTRACTION JOINTS (C.J.) SPACE SAME AS SIDEWALK WIDTH.
3. THICKEN SIDEWALK TO 6" AT DRIVEWAYS.
4. THICKEN SIDEWALK TO 6" IN LAST 3' WHERE IT ABUTS PAVEMENT WITH NO CURB.
5. 1/2" EXPANSION JOINT (E.J.) REQUIRED AT 30' MAX. AT SIDEWALK JUNCTIONS, AT STRUCTURES, AND AS NOTED ON SITE PLAN.
6. PROVIDE A LAYER OF 15# BLDG. FELT BETWEEN WALK AND ADJACENT PARALLELING CURB OR STRUCTURE.
7. REINFORCE w/6x6-10/10 W.W.M.

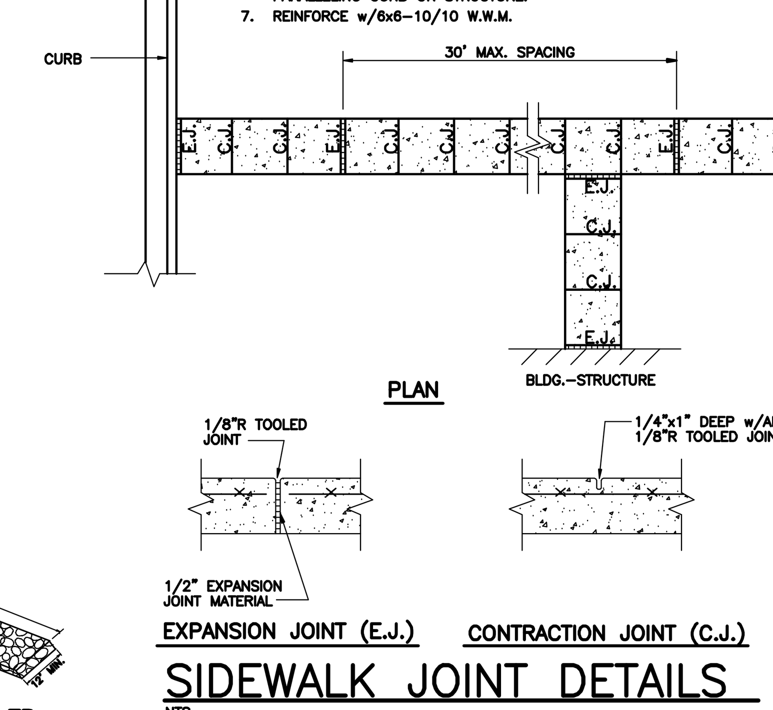

SIDEWALK JOINT DETAILS

NTS

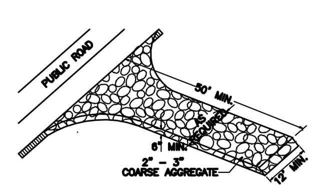

TEMPORARY GRAVELED CONSTRUCTION ENTRANCE

NTS

SITE AREA DESCRIPTION	STABILIZATION TIMEFRAME	STABILIZATION TIMEFRAME EXCEPTIONS
PERIMETER DIKES, SWALES, DITCHES AND SLOPES	7 DAYS	NONE
HIGH QUALITY WATER (HQW) ZONES	7 DAYS	NONE
SLOPES STEEPER THAN 3:1	7 DAYS	IF SLOPES ARE 10' OR LESS IN LENGTH AND ARE NOT STEEPER THAN 2:1, 14 DAYS ARE ALLOWED.
SLOPES 3:1 OR FLATTER	14 DAYS	7 DAYS FOR SLOPES GREATER THAN 50 FEET IN LENGTH
ALL OTHER AREAS WITH SLOPES FLATTER THAN 4:1	14 DAYS	NONE (EXCEPT FOR PERIMETERS AND HQW ZONES)

NPDES GROUND STABILIZATION CRITERIA

NTS

LATE WINTER & EARLY SPRING TEMPORARY GRASSING DETAIL

SEEDING MIXTURE

SPECIES	RATE (lb/acre)
Rye (grain)	120
Annual lespedeza (Kobe in Piedmont and Coastal Plain, Korean in Mountains)	50

Omit annual lespedeza when duration of temporary cover is not to extend beyond June.

SEEDING DATES:

Mountains – Above 2500 ft: Feb. 15–May 15
Below 2500 ft: Feb. 1–May 1
Piedmont – Jan. 1–May 1
Coastal Plain – Dec. 1–Apr. 15

SOIL AMENDMENTS

Follow recommendations of soil tests or apply 2,000 lb/acre ground agricultural limestone and 750 lb/acre 10-10-10 fertilizer.

MULCH

APPLY 4,000 LB/ACRE STRAW. ANCHOR STRAW BY TACKING WITH ASPHALT, NETTING, OR A MULCH ANCHORING TOOL. A DISK WITH BLADES SET NEARLY STRAIGHT CAN BE USED AS A MULCH ANCHORING TOOL.

MAINTENANCE

Refertilize if growth is not fully adequate. Reseed, refertilize and mulch immediately following erosion or other damage.

TEMPORARY SUMMER GRASSING DETAIL

SEEDING MIXTURE

SPECIES	RATE (lb/acre)
GERMAN MILLET	40

IN THE PIEDMONT AND MOUNTAINS, A SMALL-STEMMED SUNDANGRASS MAY BE SUBSTITUTED AT A RATE OF 50 LB/ACRE.

SEEDING NOTES

MOUNTAINS – MAY 15–AUG. 15
PIEDMONT – MAY 1–AUG. 15
COASTAL PLAN – APR. 15–AUG. 15

SOIL AMENDMENTS

FOLLOW RECOMMENDATIONS OF SOIL TESTS OR APPLY 2,000 LB/ACRE GROUND AGRICULTURAL LIMESTONE AND 750 LB/ACRE 10-10-10 FERTILIZER.

MULCH

APPLY 4,000 LB/ACRE STRAW. ANCHOR STRAW BY TACKING WITH ASPHALT, NETTING, OR A MULCH ANCHORING TOOL. A DISK WITH BLADES SET NEARLY STRAIGHT CAN BE USED AS A MULCH ANCHORING TOOL.

MAINTENANCE

REFERTILIZE IF GROWTH IS NOT FULLY ADEQUATE. RESEED, REFERTILIZE AND MULCH IMMEDIATELY FOLLOWING EROSION OR OTHER DAMAGE.

TEMPORARY FALL GRASSING DETAIL

SEEDING MIXTURE

SPECIES	RATE (lb/acre)
Rye (grain)	120

SEEDING NOTES

MOUNTAINS – AUG. 15–DEC. 15
COASTAL PLAN and PIEDMONT – AUG. 15–DEC 30

SOIL AMENDMENTS

FOLLOW SOIL TESTS OR APPLY 2,000 LB/ACRE GROUND AGRICULTURAL LIMESTONE AND 1,000 LB/ACRE 10-10-10 FERTILIZER.

MULCH

APPLY 4,000 LB/ACRE STRAW. ANCHOR STRAW BY TACKING WITH ASPHALT, NETTING, OR A MULCH ANCHORING TOOL. A DISK WITH BLADES SET NEARLY STRAIGHT CAN BE USED AS A MULCH ANCHORING TOOL.

MAINTENANCE

Repair and refertilize damaged areas immediately. Topdress with 50 lb/acre of nitrogen in March. If it is necessary to extend temporary cover beyond June 15, overseed with 50 lb/acre Kobe (Piedmont and Coastal Plain) or Korean (Mountains) lespedeza in late February or early March.

FALL-WINTER PERMANENT GRASSING DETAIL

SEEDING MIXTURE

SPECIES	RATE (lb/acre)
TALL FESCUE (BLEND OF TWO OR THREE IMPROVED VARIETIES)	200
RYE (GRAIN)	25

SEEDING DATES

JANUARY – APRIL
AUGUST – DECEMBER

SOIL AMENDMENTS

APPLY LIME AND FERTILIZER ACCORDING TO SOIL TESTS, OR APPLY 3.000-5,000 lb/acre GROUND AGRICULTURAL LIMESTONE (USE THE LOWER RATE ON SANDY SOILS) AND 1,000 lb/acre 10-10-10 FERTILIZER.

MULCH

APPLY 4,000 lb/acre GRAIN STRAW OR EQUIVALENT COVER OF ANOTHER SUITABLE MULCH. ANCHOR STRAW BY TACKING WITH ASPHALT, ROVING, OR NETTING OR BY CRIMPING WITH A MULCH ANCHORING TOOL. A DISK WITH BLADES SET NEARLY STRAIGHT CAN BE USED AS A MULCH ANCHORING TOOL.

MAINTENANCE

FERTILIZE ACCORDING TO SOIL TESTS OR APPLY 40 lb/acre NITROGEN IN JANUARY OR FEBRUARY, 40 lb IN SEPTEMBER AND 40 lb IN NOVEMBER, FROM A 12-4-8, 16-4-8, OR SIMILAR TURF FERTILIZER. AVOID FERTILIZER APPLICATIONS DURING WARM WEATHER, AS THIS INCREASES STAND LOSSES TO DISEASE. RESEED, FERTILIZE, AND MULCH DAMAGED AREAS IMMEDIATELY. MOW TO A HEIGHT OF 2.5-3.5 INCHES AS NEEDED.

SPRING-SUMMER PERMANENT GRASSING DETAIL

SEEDING MIXTURE

SPECIES	RATE (lb/acre)
PENSACOLA BAHIAGRASS	50
SERICEA LESPEDEZA	30
COMMON BERMUDA GRASS	10
GERMAN MILLET	10
TALL FESCUE	50

SEEDING NOTES

1. WHERE A NEAT APPEARANCE IS DESIRED, OMIT SERICEA.
2. USE COMMON BERMUDA GRASS ONLY ON ISOLATED SITES WHERE IT CANNOT BECOME A PEST. BERMUDA GRASS MAY BE REPLACED WITH 5 lb/acre CENTIPEDE GRASS.

SEEDING DATES

APRIL 1 – JULY 15

SOIL AMENDMENTS

APPLY LIME AND FERTILIZER ACCORDING TO SOIL TESTS, OR APPLY 3,000 lb/acre GROUND AGRICULTURE LIMESTONE AND 500 lb/acre 10-10-10 FERTILIZER.

MULCH

APPLY 4,000 lb/acre GRAIN STRAWOR EQUIVALENT COVER OF ANOTHER SUITABLE MULCH. ANCHOR BY TACKING WITH ASPHALT, ROVING, OR NETTING OR BY CRIMPING WITH A MULCH ANCHORING TOOL. A DISK WITH BLADES SET NEARLY STRAIGHT CAN BE USED AS A MULCH ANCHORING TOOL.

MAINTENANCE

REFERTILIZE THE FOLLOWING APRIL WITH 50 lb/acre NITROGEN. REPEAT AS GROWTH REQUIRES. MAY BE MOWED ONLY ONCE A YEAR. WHERE A NEAT APPEARANCE IS DESIRED, OMIT SERICEA AND MOW AS OFTEN AS NEEDED.

SITE WORK NOTES

1. THE CONTRACTOR SHALL VISIT THE SITE AND BECOME FAMILIARIZED WITH EXISTING CONDITIONS BOTH ON AND IMMEDIATELY ADJACENT TO THE SITE.
2. CLEARING: CONTRACTOR SHALL REMOVE ALL TREES AND VEGETATION WITHIN LIMITS OF CONSTRUCTION UNLESS OTHERWISE DESIGNATED TO REMAIN.
3. GRUBBING AND STRIPPING: CONTRACTOR SHALL RAKE AND REMOVE ROOTS, STUMPS, VEGETATION, DEBRIS, EXISTING STRUCTURES ABOVE AND BELOW GRADE, ORGANIC MATERIAL OR ANY OTHER UNSUITABLE MATERIAL WITHIN LIMITS OF CONSTRUCTION.
4. MUCKING: CONTRACTOR SHALL COORDINATE WITH OWNER AND THEIR GEOTECHNICAL REPRESENTATIVE TO COORDINATE REMOVAL OF ANY SOFT AREAS.
5. DISPOSAL: CLEARED, GRUBBED, STRIPPED OR OTHER WASTE MATERIAL SHALL BE REMOVED FROM SITE AND DISPOSED OF IN A PROPERLY PERMITTED FACILITY.
6. FILL AND COMPACTION SHOULD COMPLY WITH GEOTECHNICAL REPORT.
7. THE CONTRACTOR SHALL NOTE THAT THE GRADING PLAN MAY NOT REPRESENT A BALANCED EARTHWORK CONDITION. THE CONTRACTOR SHALL BE RESPONSIBLE FOR CUT AND FILL QUANTITIES AND COMPLETE INSTALLATION TO SPECIFIED GRADES.
8. THE CONTRACTOR SHALL FURNISH SUITABLE BORROW MATERIAL FROM AN OFF-SITE PROPERLY PERMITTED FACILITY AS REQUIRED.
9. THE CONTRACTOR IS RESPONSIBLE FOR THE LOCATION AND PROTECTION OF ALL EXISTING UTILITIES DURING CONSTRUCTION. BEFORE COMMENCING ANY EXCAVATIONS IN OR ALONG ROADWAYS OR RIGHT-OF-WAYS, PUBLIC AREAS OR IN PRIVATE EASEMENTS, THE CONTRACTOR SHALL NOTIFY ALL APPROPRIATE PERSONNEL OF THEIR INTENT TO EXCAVATE, IN WRITING, NOT LESS THAN 10 DAYS PRIOR TO EXCAVATING.
10. THE CONTRACTOR SHALL BE RESPONSIBLE TO COORDINATE DISCONNECTION/ RECONNECTION AND/OR THE RELOCATION OF ALL EXISTING UTILITIES WITH APPROPRIATE PERSONNEL.
11. EXISTING SURVEYING PERFORMED TRIPP ENGINEERING, P.C.
12. THE CONTRACTOR SHALL FIELD VERIFY ALL DIMENSIONS AT THE SITE. FURTHERMORE THE CONTRACTOR SHALL REPORT ALL DISCREPANCIES OR QUESTIONS TO THE ENGINEER PRIOR TO INSTALLATION.
13. THE CONTRACTOR SHALL PROVIDE ANY AND ALL LAYOUT REQUIRED TO CONSTRUCT HIS WORK UNLESS OTHERWISE DIRECTED BY OWNER.
14. ALL PVC UTILITY MAINS SHALL BE INSTALLED WITH A MINIMUM OF 36" COVER AT FINAL GRADE.
15. ALL SERVICE CONNECTIONS SHALL BE INSTALLED TO MEET ALL LOCAL AND STATE CODES. METERS, TAPS, MATERIALS, WORKMANSHIP AND ALL FEES SHALL BE THE RESPONSIBILITY OF THE CONTRACTOR AND SHALL COMPLY WITH ALL REQUIREMENTS.
16. ALL PAVEMENT, BASE AND SUBGRADE SHALL CONFORM TO NCDOT STANDARDS INCLUDING WORKMANSHIP, MATERIALS AND EQUIPMENT. APPROPRIATE BARRICADES, SIGNS, LIGHTS OR OTHER TRAFFIC CONTROL DEVICES SHALL BE PROVIDED IN ACCORDANCE WITH NCDOT TO MAINTAIN SAFETY AND TWO WAY TRAFFIC.
17. ALL AREAS SHALL BE GRADED FOR POSITIVE DRAINAGE. THE CONTRACTOR SHALL REPORT ANY DISCREPANCIES TO THE ENGINEER PRIOR TO INSTALLATION. ALL AREAS SHALL BE SLOPED TO DRAIN AWAY FROM BUILDINGS AT ALL TIMES.
18. CONCRETE STORM DRAINAGE PIPE SHALL BE CLASS III WITH RUBBER GASKETED JOINTS AND INSTALLED IN ACCORDANCE WITH MANUFACTURER'S REQUIREMENTS.
19. USE WHITE LANE MARKING PAINT FOR ALL PAVEMENT MARKINGS. PAINT SHALL BE A CHLORINATED RUBBER ALKYD, FS TT-P-115, TYPE III, FACTORY MIXED, QUICK DRYING, NON BLEEDING. REFLECTIVE MATERIAL MAY BE ADDED AT OWNER'S OPTION FOR NIGHT REFLECTING.
20. DUCTILE IRON SHALL BE CLASS 50.
21. CONCRETE FOR WALKS, CURBS AND DRIVES SHALL HAVE A MINIMUM COMPRESSIVE STRENGTH OF 3000 PSI @ 28 DAYS – AIR ENTRAINED.
22. FIELD TESTING SHALL BE DONE BY AN INDEPENDENT TESTING LABORATORY PAID FOR BY THE OWNER. FURTHER TESTING REQUIRED DUE TO A FAILED TEST WILL BE PAID FOR BY THE CONTRACTOR.
23. SEE GEOTECHNICAL REPORT NO. ________, DATED ________, BY ________ ________ FOR ADDITIONAL REQUIREMENTS.

CONSTRUCTION SEQUENCE

1. NO CUT SLOPE OR FILL SLOPE SHALL EXCEED A RISE OR FALL OF ONE FOOT FOR EVERY RUN OF 3 FEET (1 VERTICAL TO 3 HORIZONTAL).
2. NO SEDIMENT WILL BE ALLOWED TO EXIT THE SITE. ALL EROSION SHALL BE CONTROLLED INCLUDING SIDE SLOPES DURING AND AFTER CONSTRUCTION.
3. INSTALL PRIMARY EROSION CONTROL MEASURES BEFORE BEGINNING CONSTRUCTION INCLUDING BUT NOT LIMITED TO GRAVELED CONSTRUCTION ENTRANCE, SILT FENCE, CHECK DAMS, ETC. INSTALL ALL SECONDARY EROSION CONTROL MEASURES AS SOON AS POSSIBLE AFTER BEGINNING CONSTRUCTION.
4. ALL EROSION CONTROL MEASURES TO BE INSPECTED AFTER EACH RAIN. SILT FENCE AND INLET PROTECTION ARE TO BE CLEANED WHEN 0.5 FEET OF SEDIMENT HAVE ACCUMULATED IN FRONT OF THE DEVICE OR WHEN THEY LEAK OR FAIL. SEDIMENT TRAPS ARE CLEANED OUT AS STATED OR WHEN HALF FULL.
5. IF APPLICABLE, CONSTRUCT PROPOSED RETENTION POND TO ACT AS A SEDIMENT BASIN DURING CONSTRUCTION. REMOVE ACCUMULATION OF SILT AS REQUIRED TO ALLOW PROPER FUNCTIONING. RESTORE POND TO DESIGN LEVELS AT THE COMPLETION OF CONSTRUCTION.
6. IF APPLICABLE, INSTALL DROP INLETS WITH INLET PROTECTION TO ACT AS SILT TRAPS DURING CONSTRUCTION. REMOVE ACCUMULATED SILT AS NEEDED TO PREVENT SILT FROM ENTERING STORM DRAIN PIPING.
7. A 4" LAYER OF TOPSOIL SHALL BE APPLIED TO ALL NEW AREAS TO BE GRASSED.
8. ALL DISTURBED AREAS WILL BE STABILIZED WITHIN 21 CALENDAR DAYS OF CEASE OF ANY PHASE OF ACTIVITY. THIS INCLUDES SLOPES, SWALES, STOCKPILES AND OTHER UNSTABILIZED AREAS.
9. MAINTAIN ALL EROSION CONTROL MEASURES UNTIL PROJECT IS COMPLETE.
10. MORE STRINGENT MEASURES MAY BE REQUIRED TO HALT EROSION IF THOSE ON THIS PLAN PROVE TO BE LESS EFFECTIVE.
11. REMOVE ALL TEMPORARY EROSION CONTROL MEASURES UPON COMPLETION OF CONSTRUCTION. ALL PERMANENT MEASURES SHALL BE WELL ESTABLISHED PRIOR TO PROJECT COMPLETION.

MAINTENANCE PLAN

1. ALL EROSION AND SEDIMENT CONTROL PRACTICES WILL BE CHECKED FOR STABILITY AND OPERATION FOLLOWING EVERY RUNOFF-PRODUCING RAINFALL, BUT IN NO CASE, LESS THAN ONCE EVERY WEEK AND WITHIN 24 HOURS OF EVERY HALF INCH RAINFALL.
2. ALL POINTS OF EGRESS WILL HAVE CONSTRUCTION ENTRANCES THAT WILL BE PERIODICALLY TOP-DRESSED WITH AN ADDITIONAL 2 INCHES OF #4 STONE TO MAINTAIN PROPER DEPTH. THEY WILL BE MAINTAINED IN A CONDITION TO PREVENT MUD OR SEDIMENT FROM LEAVING THE SITE. IMMEDIATELY REMOVE OBJECTIONABLE MATERIAL SPILLED, WASHED OR TRACKED ONTO THE CONSTRUCTION ENTRANCE OR ROADWAYS.
3. SEDIMENT WILL BE REMOVED FROM HARDWARE CLOTH AND GRAVEL INLET PROTECTION, BLOCK AND GRAVEL INLET, ROCK DOUGHNUT INLET PROTECTION AND ROCK PIPE INLET PROTECTION WHEN THE DESIGNED STORAGE CAPACITY HAS BEEN HALF FILLED WITH SEDIMENT. ROCK WILL BE CLEANED OR REPLACED WHEN THE SEDIMENT POOL NO LONGER DRAINS AS DESIGNED. DEBRIS WILL BE REMOVED FROM THE ROCK AND HARDWARE CLOTH TO ALLOW PROPER DRAINAGE. SILT SACKS WILL BE EMPTIED ONCE A WEEK AND AFTER EVERY RAIN EVENT. SEDIMENT WILL BE REMOVED FROM AROUND BEAVER DAMS, DANDY SACKS AND SOCKS ONCE A WEEK AND AFTER EVERY RAIN EVENT.
4. DIVERSION DITCHES WILL BE CLEANED OUT IMMEDIATELY TO REMOVE SEDIMENT OR OBSTRUCTIONS FROM THE FLOW AREA. THE DIVERSION RIDGES WILL ALSO BE REPAIRED. SWALES MUST BE TEMPORARILY STABILIZED WITHIN 21 CALENDAR DAYS OF CEASE OF ANY PHASE OF ACTIVITY ASSOCIATED WITH A SWALE.
5. SEDIMENT WILL BE REMOVED FROM BEHIND THE SEDIMENT FENCE WHEN IT BECOMES HALF FILLED. THE SEDIMENT FENCE WILL BE REPAIRED AS NECESSARY TO MAINTAIN A BARRIER. STAKES MUST BE STEEL. STAKE SPACING WILL BE 6 FEET MAX. WITH THE USE OF EXTRA STRENGTH FABRIC, WITHOUT WIRE BACKING. STAKE SPACING WILL BE 8 FEET MAX. WHEN STANDARD STRENGTH FABRIC AND WIRE BACKING ARE USED. IF ROCK FILTERS ARE DESIGNED AT LOW POINTS IN THE IN THE SEDIMENT FENCE THE ROCK WILL BE REPAIRED OR REPLACED IF IT BECOMES HALF FULL OF SEDIMENT, NO LONGER DRAINS AS DESIGNED OR IS DAMAGED.
6. SEDIMENT WILL BE REMOVED FROM SEDIMENT TRAPS WHEN THE DESIGNED STORAGE CAPACITY HAS BEEN HALF FILLED WITH SEDIMENT. THE ROCK WILL BE CLEANED OR REPLACED WHEN THE SEDIMENT POOL NO LONGER DRAINS OR WHEN THE ROCK IS DISLODGED. BAFFLES WILL BE REPAIRED OR REPLACED IF THEY COLLAPSE, TEAR, DECOMPOSE OR BECOME INEFFECTIVE. THEY WILL BE REPLACED PROMPTLY. SEDIMENT WILL BE REMOVED WHEN DEPOSITS REACH HALF THE HEIGHT OF THE 1ST BAFFLE. FLOATING SKIMMERS WILL BE INSPECTED WEEKLY AND WILL BE KEPT CLEAN.
7. SEDIMENT WILL BE REMOVED FROM THE SEDIMENT BASIN WHEN THE DESIGN STORAGE CAPACITY HAS BEEN HALF FILLED WITH SEDIMENT. ROCK WILL BE CLEANED OR REPLACED WHEN THE SEDIMENT POOL NO LONGER DRAINS OR IF THE ROCK IS DISLODGED. BAFFLES WILL BE REPAIRED OR REPLACED IF THEY TEAR, DECOMPOSE OR BECOME INEFFECTIVE. THEY WILL BE REPLACED PROMPTLY. SEDIMENT WILL BE REMOVED FROM BAFFLES WHEN DEPOSITS REACH HALF THE HEIGHT OF THE 1ST BAFFLE. FLOATING SKIMMERS WILL BE INSPECTED WEEKLY AND WILL BE KEPT CLEAN.
8. ALL SEEDED AREAS WILL BE FERTILIZED, RESEEDED AS NECESSARY, AND MULCHED ACCORDING TO SPECIFICATIONS IN THE VEGETATIVE PLAN TO MAINTAIN A VIGOROUS, DENSE VEGETATIVE COVER. ALL SLOPES WILL BE STABILIZED WITHIN 21 CALENDAR DAYS. ALL OTHER AREAS WILL BE STABILIZED WITHIN 15 WORKING DAYS.
9. FLOCCULATES WILL BE USED TO ADDRESS TURBIDITY ISSUES. THE PUMPS, TANKS, HOSES AND INJECTION SYSTEMS WILL BE CHECKED FOR PROBLEMS OR TURBID DISCHARGES DAILY.

Approved Construction Plan	Name	Date
Planning		
Traffic		
Fire		

CITY OF WILMINGTON NORTH CAROLINA
Public Services • Engineering Division
APPROVED DRAINAGE PLAN
Date:__________ Permit #__________
Signed: __________________

For each open utility cut of City streets, a $325 permit shall be required from the City prior to occupancy and/or project acceptance.

REVISIONS		
No./Date	Description	By

DETAILS AND NOTES

BULLZEYE SHOOTING SPORTS

WILMINGTON, NORTH CAROLINA

TRIPP ENGINEERING, P.C.
419 Chestnut Street
Wilmington, North Carolina 28401
Phone 910-763-5100
Fax 910-763-5631

© 2012 TRIPP ENGINEERING, P.C.
NC LICENSE No. C-1427

DATE 02-11-13
DESIGN PGT
DRAWN EJW

C2

SHEET 3 OF 3

12029