SITE DEVELOPMENT PLANS

OF

AMBERLEIGH SHORES

NEW HANOVER COUNTY, NC

PREPARED FOR:

FLOURNOY DEVELOPMENT COMPANY

900 BROOKSTONE CENTRE PARKWAY
COLUMBUS, GA 31904

TM# R3600-005-020-000 (PARTIAL) / -022-000

NOVEMBER 15, 2011

LAST REVISED - 12/05/12 (REV 14)

J-22667

PREPARED BY:

THOMAS & HUTTON
Engineering | Surveying | Planning | GIS | Consulting

Savannah, GA | Brunswick, GA | Charleston, SC | Myrtle Beach, SC | Wilmington, NC

Schedule of Drawings

Sheet Number	Sheet Title
C00	Cover Sheet
G1.0	Plan Revision Summary
G1.1	General Notes Legend and Index
-	Alta Survey of Amberleigh Shores - Sheet 1 of 2
-	Alta Survey of Amberleigh Shores - Sheet 2 of 2
G1.2	Clearing Plan
G1.3	Overall Concept Plan
C1.0	Layout-Staking-Signage Overall
C1.1	Layout-Staking-Signage Plan
C1.2	Layout-Staking-Signage Plan
C1.3	Layout-Staking-Signage Plan
C1.4	Layout-Staking-Signage Plan
C1.5	Layout-Staking-Signage Plan
C1.6	Layout-Staking-Signage Plan
C1.7	Layout-Staking-Signage Plan
C1.8	Layout-Staking-Signage Plan
C1.9	Layout-Staking-Signage Plan
EC.0	Erosion Control Overall
EC.1	Erosion Control Plan
EC.2	Erosion Control Plan
EC.3	Erosion Control Plan
EC.4	Erosion Control Plan
EC.5	Erosion Control Plan
EC.6	Erosion Control Plan
EC.7	Erosion Control Plan
EC.8	Erosion Control Plan
EC.9	Erosion Control Plan
C2.0	Water and Sewer Overall
C2.1	Water and Sewer Plan & Profiles
C2.2	Water and Sewer Plan & Profiles
C2.3	Water and Sewer Plan & Profiles
C2.4	Water and Sewer Plan & Profiles
1 of 4	Sanitary Sewer Standard Details
2 of 4	Sanitary Sewer Standard Details
3 of 4	Sanitary Sewer Standard Details
4 of 4	Sanitary Sewer Standard Details
1 of 2	Water Distribution System Standard Details
2 of 2	Water Distribution System Standard Details
C3.0	Grading and Drainage Overall
C3.1	Grading and Drainage Plan
C3.2	Grading and Drainage Plan
C3.3	Grading and Drainage Plan
C3.4	Grading and Drainage Plan
C3.5	Grading and Drainage Plan
C3.6	Grading and Drainage Plan
C3.7	Grading and Drainage Plan
C3.8	Grading and Drainage Plan
C3.9	Grading and Drainage Plan
C5.0	Accessible Route Plan
C6.0	Civil Site Details
C6.1	Civil Site Details
C6.2	Civil Site Details
C6.3	Civil Site Details
C6.4	Civil Site Details
C6.5	Civil Site Details
C6.6	Civil Site Details
C6.7	Civil Site Details
C6.8	Civil Site Details
C6.9	Civil Site Details
C6.10	Civil Site Details
CS.01	Civil Structural Notes
CS2.1	Wall Sections and Details
CS2.2	Wall & Outlet Structure Details
CS2.3	Baffle Wall Section and Details
CS3.1	Pond Outlet Details-Site Wall Details
L1.0	Overall Landscape Plan
L0.1A	Tree Preservation Plan
L0.1B	Tree Preservation Plan
L0.1C	Tree Calculations
L1.1	Enlarged Landscape Plan
L1.2	Enlarged Landscape Plan
L1.3	Enlarged Landscape Plan
L1.4	Enlarged Landscape Plan
L1.5	Enlarged Landscape Plan
l1.6	Enlarged Landscape Plan
L1.7	Enlarged Landscape Plan
L1.8	Landscape Details & Notes
A-5.1	Building Elevations
A-5.2	Building Elevations
A-5.2A	Building Elevations
A-5.3	Building Elevations
A-5.4	Building Elevations
A-5.5	Building Elevations
A-5.6	Building Elevations
G-2.1	Garage Elevations
G-2.2	Garage Elevations
G-2.3	Garage Elevations
PP-2.2	Pool Pavilion Elevations
SW-1	Compactor Enclosure Elevations

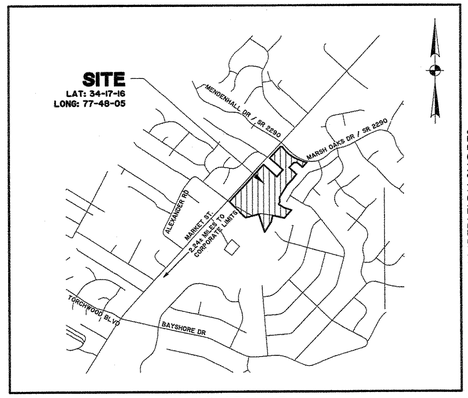

VICINITY MAP
SCALE: NOT TO SCALE

AMBERLEIGH SHORES

J-22667
11/15/11

Approved Construction Plan

	Name	Date
Planning		12/12/12
Public Utilities		
Traffic		12/12/12
Fire		12/13/12

CITY OF WILMINGTON NORTH CAROLINA
Public Services • Engineering Division
APPROVED STORMWATER MANAGEMENT PLAN
Date: 12/12/12 Permit # 2012016R2
Signed:

RECEIVED
DEC 1 1 2012
PLANNING DIVISION

REVISION HISTORY

REV. NO.	REVISION	BY	DATE
14	SEE REVISION SUMMARY ON SHEET G1.0 / ISSUE FOR CONSTRUCTION	BDR	12/05/12
13	SEE REVISION SUMMARY ON SHEET G1.0	BDR	09/13/12
12	SEE REVISION SUMMARY ON SHEET G1.0	BDR	08/27/12
11	SEE REVISION SUMMARY ON SHEET G1.0 (HUD REV)	BDR	08/07/12
10	SEE REVISION SUMMARY ON SHEET G1.0 (HUD REV)	BDR	07/24/12
9	SEE REVISION SUMMARY ON SHEET G1.0	BDR	07/20/12
8	REVISED SHEETS C1.9, C3.9 & C6.10 PER NCDOT	BDR	07/03/12
7	REVISED SHEETS C2.1, C2.3 & C2.4 PER NCDENR PWS	BDR	05/18/12
6	SEE PLAN REVISON SUMMARY SHEET G1.0	BDR	05/18/12

SUBMITTAL HISTORY

SUBMITTED TO	DATE
ISSUE REV 14 FOR CONSTRUCTION, TO OWNER & ANGENCIES	DECEMBER 2012
ISSUE REV 12 TO OWNER AND AGENCIES	08/28/12
SEND FINAL SET W/ REV 10 TO OWNER FOR UPDATED PRICING	07/25/12
CITY CONSTRUCITON RELEASE SUBMITTAL	07/24/12
2ND SUBMITTAL TO NCDENR PWS	05/18/12
2ND NCDOT ENCROACHMENT SUBMITTAL	04/25/12
CITY STORM WATER & NHC EROSION CONTROL SUBMITTAL	04/19/12
2ND CITY TRC SUBMITTAL	04/16/12
3RD CFPUA SUBMITTAL	04/04/12

811 Know what's below. Call before you dig.

THOMAS & HUTTON
Engineering | Surveying | Planning | GIS | Consulting
215 South Kerr Avenue • Unit B
Wilmington, NC 28403
p.910.332.3360 f.910.332.3361
www.thomasandhutton.com

REVISION A DESCRIPTIONS - 01/16/12

Sheet No.	Revision Comment
C00	Update Table of Contents to match sheet names.
EC.0	Delete "approved equal" references in notes.
2 of 2	Delete "approved equal" references in notes.
C6.0	Delete "approved equal" references in notes.
C6.1	Delete "approved equal" references in notes.
C6.2	Delete "approved equal" references in notes.

REVISION B DESCRIPTIONS - 01/25/12

Sheet No.	Revision Comment
C6.1	Delete "approved equal" references in notes.

REVISION 1 DESCRIPTIONS - 01/25/12

Sheet No.	Revision Comment
C00	Update Schedule of Drawings. Add sheet G1.3.
G1.1	Update General Notes, Project Information & Project Contacts.
G1.2	Increase clearing limits along Marsh Oaks Drive and add additional tree protection.
G1.3	Add Overall Concept Plan with required City of Wilmington Development Data notes. Adjust playground location. Add dog parks behind Garage C and across from Building 9 including additional sidewalks for access. Relocate compactor access to rear. Reduce size of u-turn bulb out on Market based on "SU" truck turning radii.
C1.0-C1.8	Adjust playground location. Add dog parks behind Garage C and across from Building 9 including additional sidewalks for access. Relocate compactor access to rear. Reduce size of u-turn bulb out on Market based on "SU" truck turning radii. Delete asphalt on Market Street right north bound lane. Add additional dimensions on Market St. per NCDOT requirements. Miscellaneous label revisions. Revise perimeter fence types. Graphically show detectable warning strips. Remove Accessible parking at playground per FDC. Add 24" thermoplastic stop bar & remove turn arrows at Marsh Oaks Entrance.
EC.0-EC.8	Update erosion control plans to show revised playground location and new dog parks mentioned above. Add Outlet Stabilization Structure symbols at storm discharge locations. Revise disturbance limits adjacent to Pond 2 due to removing exterior retaining wall on north side of pond. Revise disturbance limits along Marsh Oaks Drive to accommodate storm drain installation. Update clearing / disturbance limits for u-turn bulb on Market St. Show existing condition survey in u-turn area.
C2.0-C2.4	Minor layout revisions to water to avoid landscape conflicts. Delete FH at northeast corner of Building 12. Relocate MH #8 and add MH #19 to serve existing, adjacent commercial tracts per CFPUA. Revise water & sewer service locations based on coordination with MEP. Moved DCVA's inside buildings and revised notes accordingly. Delete hose bib from potable water system at compactor and add note to be supplied via irrigation system.
C3.0-C3.8	Revise grading to accommodate relocation of playground, new dog parks behind Garage C and across from Building 9, eliminate perimeter retaining wall on north side of Pond #2. Update water, sewer and building background information. Add tree protection to background. Show detectable warning strip locations. Revise inlet locations behind garage C and add YI #84. Revise grading of turn lane on Market St and eliminate overlay of existing north bound lane. Add grading information for u-turn bulb based on existing conditions survey provided.
C5.0	Revise accessibility route to accommodate new playground location and additional dog parks located behind Garage C and across from Building 9.
C6.0-C6.9	Miscellaneous revisions to details based on owner coordination. Revise NCDOT Turn Lane Pavement Section on C6.6.
CS2.2	Revise u-shape exterior wall system to be a single free standing wall.

REVISION 2 DESCRIPTIONS - 03/09/12

Sheet No.	Revision Comment
C2.0	Revise water and sewer infrastructure to be privately owned and maintained with 4" master meter (domestic) and separate, dedicated fire main loop. Add Domestic Booster Pump. Revise Fire Hydrant locations. Update Notes.
C2.1	Delete water connection to Marsh Oaks Dr. Revise watermain sizes. Revise Fire Hydrant and valve locations. Delete MH's 5 & 6. Relocate MH 4 & 8. Raise sewer from MH 1-4 and 4-8.
C2.2	Revise watermain sizes. Revise Fire Hydrant and valve locations. Delete MH 19. Raise sewer from MH 1-4 and 4-8.
C2.3	Revise watermain sizes. Add 4" domestic master meter with 6" RPZ. Add 10" RPZ for dedicated fire main loop. Revise Fire Hydrant and valve locations. Delete MH 13. Revise MH 12 & 18 location. Move water service location to left side of Bldg 8. Add Sand and Oil/Water Interceptor Detail for carwash drain.
C2.4	Revise watermain sizes. Revise Fire Hydrant and valve locations. Revise MH 16 location.

REVISION 3 DESCRIPTIONS - 03/27/12

Sheet No.	Revision Comment
C2.0	Revise Utility Note #14. Add Cross Connection Note #2.
C2.1	Raise water main crossing over sewer between MH 2 & 3.
C2.3	Change sewer material to DIP between MH 17 & 18 and specify DIP water main crossing over same sewer run. Change tee and reducer configuration at meter location.
1/4 - 4/4	Replace Sanitary Sewer Detail sheets with new issue from CFPUA
1/2 - 2/2	Replace Water Detail sheets with new issue from CFPUA

REVISION 4 DESCRIPTIONS - 04/23/12

Sheet No.	Revision Comment
Cover	Update Schedule of Drawings
G1.0	Add Plan Revision Summary sheet
G1.1	Add Accessible Ramps & Landings to Abbreviation Schedule. Delete NCDOT Overlay in Pavement Legend. Add Pervious Pavement to Pavement Legend. Update Project Information.
G1.2	Update overall clearing limits & tree protection. Add Wetland fill locations. Update notes per TRC.
G1.3	Add Asphalt multi-use trail along Market Street Frontage. Revise Accessible Parking and crosswalk locations. Delete parking space on west side of carwash. Delete 3 parking spaces across from Bldg 10 & 11 to protect buffer. Delete 2 parking spaces & add island in front of Bldg 1. Add 1 visitor parking space on west end of Bldg 1. Delete Dog Park on northeast end of Bldg 13. Add sidewalks to Fitness room & Model Apartment in Bldg 1. Revise Construction Access location. Add concrete pads at each Dog Park & playground. Increase sidewalk width to 7' in front of Bldg 1, 11, between 12 & 13 and north end of Bldg 13. Adjust location of Monument Signage Move Bldg 7, 9, 10 & 13 back 1' from the parking Adjust sidewalk location to front access of 3-Story Bldgs Decrease pavement width to garage access in 3-Story Bldgs Revise Open Space Boundaries and calculations. Update parking schedule & impervious summary in Development Data. Add bicycle parking to Development Data. Revise notes per TRC.
C1.0-C1.8	Add Asphalt multi-use trail along Market Street Frontage. Revise Accessible Parking, crosswalk locations and signage. Delete parking space on west side of carwash. Delete 3 parking spaces across from Bldg 10 & 11 to protect buffer. Delete 2 parking spaces & add island in front of Bldg 1. Add 1 visitor parking space on west end of Bldg 1. Delete Dog Park on northeast end of Bldg 13. Add sidewalks to Fitness room & Model Apartment in Bldg 1. Revise Construction Access location. Add concrete pads at each Dog Park & playground. Increase sidewalk width to 7' in front of Bldg 1, 11, between 12 & 13 and north end of Bldg 13. Adjust location of Monument Signage Move Bldg 7, 9, 10 & 13 back 1' from the parking Adjust sidewalk location to front access of 3-Story Bldgs Decrease pavement width to garage access in 3-Story Bldgs Eliminate parking bumpers Add Yield Sign at Market Street Entrance Update dimensions for the noted revisions. Revise Notes.
C1.9	Add additional sheet for multi-use path along Market Street.
EC.0	Revise Notes & Legend
EC.1-EC.8	Update Erosion Control symbol locations. Adjust Limits of Disturbance & Silt Fence locations Add miscellaneous notes and tree save area notes Add Temporary Sediment Traps 1 & 2
EC.9	Add additional sheet for erosion control measures along multi-use path adjacent to Market Street.
C3.0	Update notes.
C3.1-C3.8	Layout revisions as noted above. Raise site 10" except for entrances, ponds & tree save areas. Adjust spot grades & contours accordingly. Adjust storm inlet elevations. Add additional spot grades & flow arrows. Add accessible ramp and landing symbols. Adjust location of YI's 53-56 & 60 and GI 86 Add GI 88, YI 87 & 89, JB 43 & 90 Delete HI 43 Change pipe size from GI 45 to JB 90 from 15" RCP to 8" DIP Lowered Pond 2 bottom and normal pool elevation 1 foot. Add coordination notes for Pond walls Add Rip Rap to Pond Overflow locations Add miscellaneous coordination notes Add Retaining wall on west end of Bldg 5 Change pipe size from GI 20 to GI 19 from 18" RCP to 15" RCP Change pipe size from YI 55 to YI 54 from 15" HDPE to 12" HDPE Change pipe size from YI 52 to YI 51 from 18" HDPTE to 15" HDPE Change pipe size from YI 58 to GI 49 from 15" HDPE to 18" HDPE Change pipe size from YI 50 to GI 49 from 24" HDPE to 18" HDPE Change pipe size from GI 91 from 18" RCP to 24" RCP Change pipe size from GI 46 to GI 40 from 15" RCP to 24" RCP Delete GI 72 & 73 and associated pipe (206 LF 24" RCP & 134 LF 36" RCP)
C3.9	Add additional sheet for multi-use path adjacent to Market Street
C4.0-C4.9	Add Storm Drain Profile sheets
C5.0	Update Accessible Route based on layout revisions noted above.
C6.0	Add Silt Sack Detail
C6.1	Delete Rock Pipe Inlet Protection Detail Revise Pond Detail elevations and notes Add Perimeter Subgrade Drain to Pond 1 Detail Add Temporary Sediment Trap Details Add Skimmer Size information Revise Dimensions of Rip Rap Outlet Structures
C6.2	Add Sand and Grease Interceptor Box Detail for Trash Compactor Delete NCDOT spec requirement for Hooded Inlet (pertains to onsite inlets ONLY) Delete Subgrade Drain from Grate Inlet Detail
C6.3	Add Curb Transition Detail Revise Pavement Section Details per Geotecnical Report
C6.4	Revise sidewalk details to include provisions for 7' wide sidewalks. Add note to Raised Sidewalk detail for 4" reveal in certain locations.
C6.5	Delete all fence details. Moved to Architectural drawings. Add NCDOT Raised Reflector Details for Market Street turn lane.
C6.6	Add Market Street Path Section detail.
C6.8	Add NCDOT Pedestrian Crosswalk detail.
CS0.1-CS3.1	Revise elevations on walls and outlet structures Add Perimeter Subgrade Drain to Pond 1 wall

REVISION 5 DESCRIPTIONS - 04/23/12

Sheet No.	Revision Comment
G1.3	Update Building Coverage and Impervious Summary Notes.
C2.3	Add note #2 to Sand and Oil/Water Separator Detail.
C3.2	Add Public Drainage Easement for the 29" x 45" elliptical storm drain pipe. Revise location of SMH #78.
C3.5	Add Public Drainage Easement for the 29" x 45" elliptical storm drain pipe.

REVISION 6 DESCRIPTIONS - 05/18/12

Sheet No.	Revision Comment
G1.0	Add Revision 6 Summary
G1.1	Update Disturbance Area in chart.
G1.2	Update clearing / disturbance limits.
G1.3	Update Impervious area information.
EC.0	Revise Erosion Control Maintenance Plan notes, Construction Sequence & Stabilization notes.
EC.1-EC.8	Revise Silt Fence to go up and over fill on top of storm outlet pipes per NHC. Relocate Construction Entrance / Exit to Marsh Oaks Drive Add silt fence along existing ditch for protection until relocation pipe is installed. Add pipe for temporary ditch crossing until relocation pipe is installed. Add requirement for temporary ditch plug during filling operations.
C1.0 & C1.9	Revise Emergency access to be paved and 15' in width. Revise sidewalks adjacent to parking to be 6.5' in width. Reduce sidewalk width to 4' along access to Market St, adjacent to bldg's 6 & 8 and on west end of bldg 5. Sidewalk layout revisions in courtyard at south end of bldgs 4 & 11 and southwest of bldg 1.1 Add crosswalks and detectable warnings in front of 3-bay garage. Revise Market Street Turn lane geometry and islands per NCDOT and WMPO. Delete concrete island in center of Market St per NCDOT and WMPO. Delete u-turn bulb on Market Street per NCDOT and WMPO. Add stop sign and stop bar at Market Street exit per NCDOT. Remove 36" concrete valley gutter at Market St entrance per NCDOT. Remove crosswalk striping at Market St entrance per NCDOT. Remove Yield & Pedestrian Crossing signs at Market St. Entrance per NCDOT. Revise Market St turn lane striping per NCDOT.
C3.1 & C3.9	Revise sidewalk grades based on sidewalk revisions noted above. Revise Emergency access to be paved and 15' in width. Specify that existing driveway cut on Market be replaced per City of Wilmington standard driveway apron detail (SD8-02).
C3.7	Delete Grate Inlet 45 and associated downstream pipe (22 LF 8" DIP). Revise Trash Enclosure grading.
C5.0	Update Accessible Route based on layout revisions noted above.
C6.0	Revise Silt Fence detail to allow option for no wire backing with 6' max. stake spacing.
C6.1	Add note to pond details that require permanent vegetation prior to C/O. Add maximum length dimension to orifice. Add dimensions for Rip Rap Outlet Stabilization Structure #6.
C6.2	Add Temporary Ditch Crossing Detail. Add Temporary Ditch Plug Detail. Add City of Wilmington Standard Driveway Apron detail, SD 8-02. Delete Sand/Grease interceptor detail that was added as part of Revision 3.
C6.6	Revise NCDOT Turn Lane and Market St. Path Section details.
C6.7	Delete NCDOT detail 840.31
C6.10	Add NCDOT detail 840.34
CS2.1	Revise top of wall elevations.
CS2.2	Revise top of wall elevations.
CS3.1	Update Outfall Structure Elevation Chart.

REVISION 7 DESCRIPTIONS - 05/18/12

Sheet No.	Revision Comment
G1.0	Add Revision 7 Summary
C2.1	Add separation of utility crossings per NCDENR PWS
C2.3	Add separation of utility crossings per NCDENR PWS
C2.4	Add separation of utility crossings per NCDENR PWS

REVISION 8 DESCRIPTIONS - 07/03/12

Sheet No.	Revision Comment
G1.0	Add Revision 8 Summary
C1.9	Revise Emergency Access driveway apron width to 20' per NCDOT.
C3.9	Revise spot grades on Emergency Access driveway apron.
C6.10	Delete Shark Teeth Yield line detail.

REVISION 9 DESCRIPTIONS - 07/20/12

Sheet No.	Revision Comment
G1.0	Add Revision 9 Summary
G1.1	Update Project Map to show revised Emergency Driveway location.
G1.2	Update clearing limits based on revised Emergency Driveway location.
G1.3	Update to show revised Emergency Driveway location.
C1.0	Update to show revised Emergency Driveway location.
C1.9	Update Emergency Driveway location & associated dimensions.
EC.0	Update to show revised Emergency Driveway location.
EC.9	Update silt fence based on revised Emergency Driveway location.
C2.0	Update to show revised Emergency Driveway location.
C2.3	Update to show revised Emergency Driveway location.
C3.0	Update to show revised Emergency Driveway location.
C3.9	Revise spot grades on Emergency Access driveway apron.
C5.0	Update to show revised Emergency Driveway location.

REVISION 10 DESCRIPTIONS (HUD WETLAND REVISIONS) - 07/24/12

Sheet No.	Revision Comment
G1.0	Add Revision 10 Summary. Revision 10 consisted of the following changes per HUD to further minimize wetland impacts: -Adjusted retaining walls on each end of Bldg 5 and across from Bldgs 2 & 4 -Additionally, two parking spaces were removed across from Bldg 2 and relocated to the parking bay on north end of Bldg 3. -As part of the parking revisions the retaining wall behind Bldg 3 was extended to connect to the wall across from Bldg 2. Approximately 142 LF of additional wall.
G1.1	Update Project Map to show revisions documented above.
G1.2	Update clearing limits based on revisions documented above. Add wetland impact permit #'s to note 4.
G1.3	Updated to show revisions documented above.
C1.0	Updated to show revisions documented above.
C1.1-C1.3	Update dimensioning to show revisions documented above.
EC.0-EC.3	Update clearing limits and silt fence in location of wall revisions described above.
C2.0	Updated to show revisions documented above.
C2.3-C2.4	Updated to show revisions documented above.
C3.0	Updated to show revisions documented above.
C3.1	Update finish grade shots based on revisions noted above. Add additional retaining wall elevations on the new wall described above.
C3.2-C3.3	Update finish grade shots based on revisions noted above.
C5.0	Updated to show revisions documented above.

REVISION 11 DESCRIPTIONS - 08/07/12

Sheet No.	Revision Comment
G1.0	Add Revision 11 Summary. - Two parking spaces were made pervious in the parking bay on the north end of Building 3.
G1.3	Updated to show revisions documented above.
C1.0	Updated to show revisions documented above.
C1.1	Updated to show revisions documented above.
EC.0	Updated to show revisions documented above.
C2.0	Updated to show revisions documented above.
C2.4	Updated to show revisions documented above.
C3.0	Updated to show revisions documented above.
C3.1	Updated to show revisions documented above.
C5.0	Updated to show revisions documented above.

REVISION 12 DESCRIPTIONS - 08/27/12

Sheet No.	Revision Comment
G1.0	Add Revision 12 Summary.
CS2.3	Revise Sheet Pile material reference to "AWM" on detail 4/S2.3.
Various -	Update revision #'s per the Revision Summary on applicable sheets. The following sheets are NOT part of Revision 12: ALTA Survey (2 sheets) C1.9 EC.9 CFPUA Water & Sewer Detail Sheets (6 sheets) CS.01 CS2.1 CS2.2 CS3.1

REVISION 13 DESCRIPTIONS - 09/13/12

Sheet No.	Revision Comment
G1.0	Add Revision 13 Summary.
G1.2	Revise clearing limit location on NE corner of site for the storm pipe outfall.
EC.0	Revise clearing limit location on NE corner of site for the storm pipe outfall.
EC.7	Revise clearing limit location on NE corner of site for the storm pipe outfall.
C3.7	Add label for Storm Manhole #92 and upstream pipe.

REVISION 14 DESCRIPTIONS - 12/05/12 (ISSUE FOR CONSTRUCTION)

Sheet No.	Revision Comment
G1.0	Add Revision 14 Summary. - Revision consisted of revising the Marsh Oaks Entrance to include a turn around onsite outside of the gates per NCDOT & City of Wilmington. Revised Emergency Gate symbol and deleted concrete strip per FDC. Revise clearing limits for sewer connection to Marymount.
G1.2	Revise clearing limits for sewer connection to Marymount.
G1.3	Update to show revised Marsh Oaks Entrance, revise Impervious Summary, revise emergency gate symbol.
C1.0	Update to show revised Marsh Oaks Entrance & emergency gate symbol.
C1.3	Revise emergency gate symbol and delete concrete strip at gate.
C1.7	Revise layout dimension for Marsh Oaks Entrance Revisions.
C1.8	Revise Market Street turn lane per NCDOT Driveway Permit redlines.
C1.9	Revise emergency gate symbol and delete concrete strip at gate.
EC.0	Update to show revised Marsh Oaks Entrance, clearing limits & emergency gate symbol.
EC.3	Revise emergency gate symbol and delete concrete strip at gate.
EC.5	Revise clearing limits for sewer connection to Marymount.
EC.7	Update to show revised Marsh Oaks Entrance.
EC.9	Revise emergency gate symbol and delete concrete strip at gate.
C2.0	Update to show revised Marsh Oaks Entrance & emergency gate symbol.
C2.1	Update to show revised Marsh Oaks Entrance.
C2.3	Revise emergency gate symbol and delete concrete strip at gate.
C3.0	Update to show revised Marsh Oaks Entrance & emergency gate symbol.
C3.2	Revise inlet pipe to SMH#79 to 36" circular RCP.
C3.3	Revise emergency gate symbol and delete concrete strip at gate.
C3.5	Revise outlet pipe from SMH#74 to 36" circular RCP & add FES.
C3.7	Revise Marsh Oaks entrance grading.
C3.9	Revise emergency gate symbol and delete concrete strip at gate.
C5.0	Update to show revised Marsh Oaks Entrance & emergency gate symbol.
C6.2	Delete Hood Grate Inlet Detail. NCDOT details to be used for all Hooded inlets per details on subsequent sheets.
C6.3	Add note to Extruded Curb Detail. Revise first lift of asphalt on the Light Duty Pavement Section to be I19.0B.
C6.8	Add NCDOT standard detail 852.05 for 18" curb transition at hood curb inlets.
CS3.1	Add Grate connection detail to Outlet Structure.

Approved Construction Plan

	Name	Date
Planning	[signature]	12/12/12
Public Utilities		
Traffic	TSM	12/12/12
Fire	[signature]	12/13/12

RECEIVED
DEC 11 2012
PLANNING DIVISION

CITY OF WILMINGTON NORTH CAROLINA
Public Services ● Engineering Division
APPROVED STORMWATER MANAGEMENT PLAN
Date: 12/12/12 Permit # 2012016R2
Signed: [signature]

NORTH CAROLINA THOMAS & HUTTON ENGINEERING CO. No. F-0871 CERTIFICATE OF AUTHORIZATION

NORTH CAROLINA PROFESSIONAL SEAL 28179 ENGINEER JACK D. REEL 12/05/12

NO.	REVISIONS	BY	DATE
14	ADD REVISION 14 SUMMARY	BDR	12/05/12
13	ADD REVISION 13 SUMMARY	BDR	09/13/12
12	ADD REVISION 12 SUMMARY	BDR	08/27/12
11	ADD REVISION 11 SUMMARY	BDR	08/07/12
10	ADD REVISION 10 SUMMARY	BDR	07/24/12
9	ADD REVISION 9 SUMMARY	BDR	07/20/12
8	ADD REVISION 8 SUMMARY	BDR	07/03/12
7	ADD REVISION 7 SUMMARY	BDR	05/18/12
6	ADD REVISION 6 SUMMARY	BDR	05/18/12

THOMAS & HUTTON
Engineering | Surveying | Planning | GIS | Consulting
215 South Kerr Avenue • Unit B
Wilmington, NC 28403 • 910.332.3360
www.thomasandhutton.com
Savannah, GA | Brunswick, GA | Charleston, SC | Myrtle Beach, SC

FLOURNOY DEVELOPMENT COMPANY
NEW HANOVER COUNTY, NC
AMBERLEIGH SHORES
PLAN REVISION SUMMARY

JOB NO:	J-22667
DATE:	11/15/11
DRAWN:	BDR
DESIGNED:	BDR
REVIEWED:	JDR
APPROVED:	JDR
SCALE:	1" = 1'

G1.0

WATER LEGEND

DESCRIPTION	EXISTING	PROPOSED
WATER MAIN	10"W	10"W
SINGLE SERVICE LATERAL		
DOUBLE SERVICE LATERAL		
VALVE AND BOX		
FIRE HYDRANT W/VALVE & BOX		
POST HYDRANT		
REDUCER		
BACKFLOW PREVENTOR		
CROSS		
TEE		
90° BEND - HORIZONTAL		
45° BEND - HORIZONTAL		
22-½° BEND - HORIZONTAL		
11-¼° BEND - HORIZONTAL		
BEND - VERTICAL		
CAP		

DRAINAGE LEGEND

DESCRIPTION	EXISTING	PROPOSED
PIPE		
DITCH		
CURB INLET		
GRATE INLET		
JUNCTION BOX		
OUTLET STRUCTURE		

OTHER UTILITIES LEGEND

DESCRIPTION	EXISTING	PROPOSED
NATURAL GAS	-GAS-	
UNDERGROUND CABLE	-UGC-	
UNDERGROUND TELEPHONE	-UGFO-	
OVERHEAD ELECTRICITY	-OHP-	
UNDERGROUND ELECTRICITY	-UGP-	
PROPOSED SITE LIGHTING (BY OTHERS)		

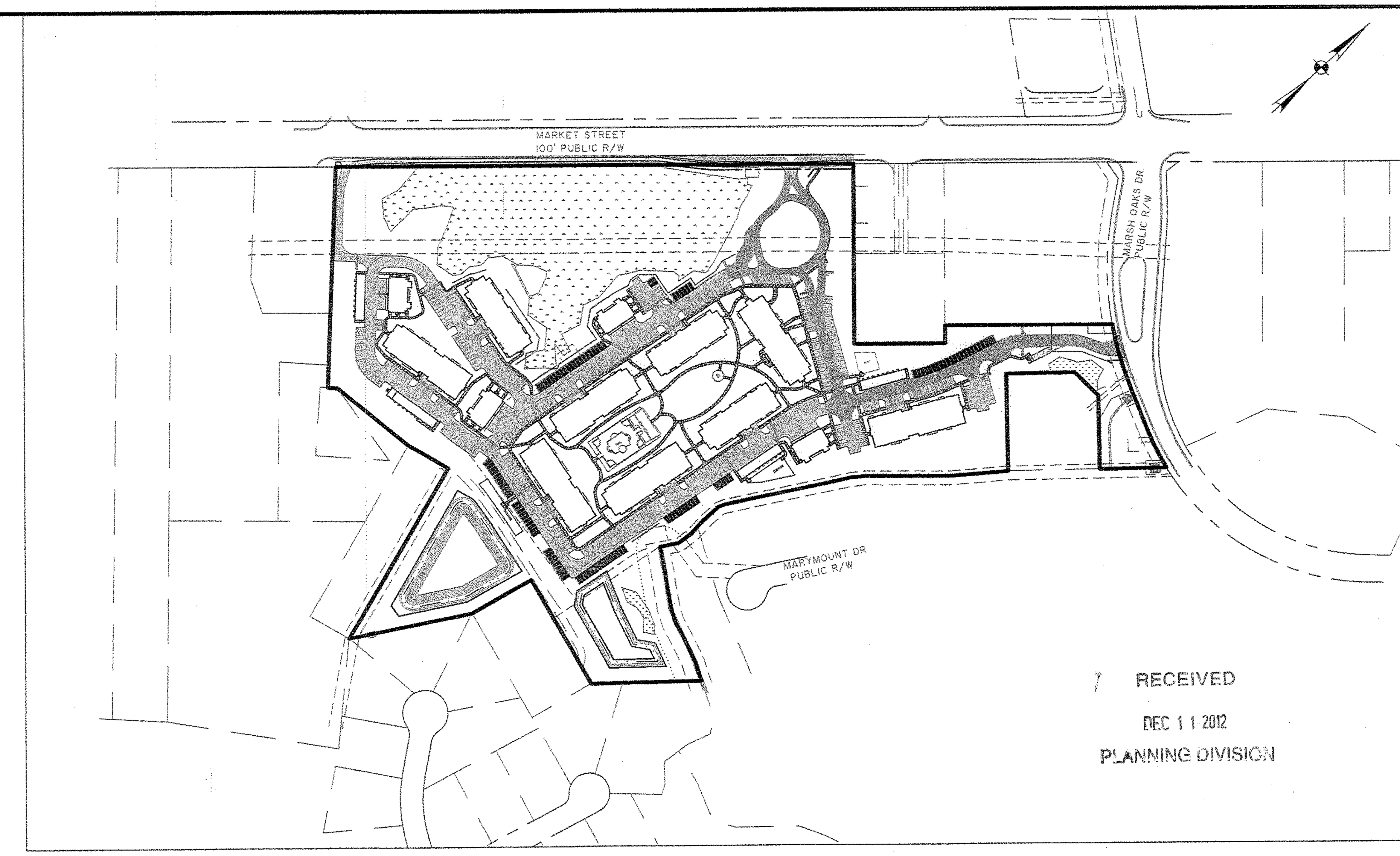

RECEIVED
DEC 1 1 2012
PLANNING DIVISION

SITE MAP

SCALE: 1" = 200'

ABBREVIATIONS

HDPE	HIGH DENSITY POLYETHYLENE		LF	LINEAR FEET		SF	SQUARE FEET
BOT	BOTTOM		MAX	MAXIMUM		SS	SANITARY SEWER
CI	CURB INLET		MIN	MINIMUM		TC	TOP OF CURB
CPP	CORRUGATED PLASTIC PIPE		MH	MANHOLE		TG	TOP OF GUTTER
DIP	DUCTILE IRON PIPE		OC	ON CENTER		TP	TOP OF PAVEMENT
EL	ELEVATION		PC	POINT OF CURVE		TW	TOP OF WALK
FG	FINISH GRADE		PH	POST HYDRANT		TYP	TYPICAL
FH	FIRE HYDRANT		PT	POINT OF TANGENT		W	WATER
FM	FORCE MAIN (SANITARY SEWER)		PVC	POLYVINYL CHLORIDE		W/	WITH
FR	FRAME		RCP	REINFORCED CONCRETE PIPE		WV	WATER VALVE
GI	GRATE INLET		RJP	RESTRAINED JOINT PIPE		YI	YARD INLET
GV	GATE VALVE		R/W	RIGHT-OF-WAY		DCVA	DOUBLE CHECK VALVE ASSEMBLY
INV	INVERT ELEVATION		SD	STORM DRAINAGE		WMV	WATER METER VAULT
JB	JUNCTION BOX		SDMH	STORM DRAINAGE MANHOLE		Ⓡ	ACCESSIBLE SIDEWALK RAMP
						Ⓛ	ACCESSIBLE SIDEWALK LANDING

SEWER LEGEND

DESCRIPTION	EXISTING	PROPOSED
GRAVITY PIPE	SS	
SINGLE SERVICE LATERAL		
DOUBLE SERVICE LATERAL		
MANHOLE		
CLEANOUT		
FORCEMAIN	10"FM 10"FM	10"FM 10"FM

PAVMENT LEGEND

- LIGHT DUTY ASPHALT PAVEMENT
- HEAVY DUTY ASPHALT PAVEMENT
- CONCRETE PAVEMENT
- SOIL DRIVEWAY
- NCDOT ASPHALT PAVEMENT
- PERVIOUS PAVEMENT MATERIAL

GENERAL NOTES

1. THE CONTRACTOR SHALL NOTIFY THE OWNER AND THE ENGINEER 48 HOURS IN ADVANCE OF ALL REQUIRED TESTS AND INSPECTIONS.
2. THE CONTRACTOR WILL NOTIFY THE ENGINEER IF UNSUITABLE MATERIAL IS DISCOVERED PRIOR TO BEGINNING ANY REMOVAL OPERATION.
3. ALL ELEVATIONS SHOWN ARE BASED ON NAVD88.
4. ALL BEARINGS AND COORDINATES SHOWN ARE BASED ON THE NORTH CAROLINA STATE PLANE COORDINATE SYSTEM NAD83.
5. CONTRACTOR IS TO VERIFY ACCURACY OF ANY TEMPORARY BENCHMARKS SHOWN PRIOR TO UTILIZING THEM FOR CONSTRUCTION.
6. THE EXISTING UNDERGROUND UTILITIES SHOWN HEREON ARE BASED UPON AVAILABLE INFORMATION. THE CONTRACTOR SHALL BE RESPONSIBLE FOR DETERMINING THE EXACT LOCATION OF ALL UTILITIES OTHER THAN THOSE SHOWN ARE ENCOUNTERED DURING CONSTRUCTION , THE CONTRACTOR SHALL NOTIFY THE ENGINEER IMMEDIATELY AND TAKE STEPS TO PROTECT THE LINE(S) AND ENSURE CONTINUED SERVICE. DAMAGE CAUSED TO EXISTING UTILITIES BY THE CONTRACTOR SHALL BE REPAIRED BY THE CONTRACTOR. ADDITIONALLY, THE CONTRACTOR SHALL CONFIRM THE CONNECTION POINTS OF NEW UTILITIES TO EXISTING UTILITIES PRIOR TO BEGINNING NEW CONSTRUCTION.
7. CONTACT NORTH CAROLINA ONE CALL CENTER PRIOR TO ANY DIGGING. 1-800-632-4949.
8. PRIOR TO ANY CLEARING, GRADING OR CONSTRUCTION ACTIVITY, TREE PROTECTION FENCING WILL BE INSTALLED AROUND PROTECTED TREES OR GROVES OF TREES AND NO CONSTRUCTION WORKERS, TOOLS, MATERIALS, OR VEHICLES ARE PERMITTED WITHIN THE TREE PROTECTION FENCING.
9. IF WORK IS SUSPENDED OR DELAYED FOR 14 DAYS, THE CONTRACTOR SHALL TEMPORARILY STABILIZE THE DISTURBED AREA AT NO ADDITIONAL COST TO THE OWNER.
10. THE CONTRACTOR SHALL INSTALL ANY BARRICADES PRIOR TO BEGINNING CONSTRUCTION.
11. ANY DAMAGE TO EXISTING PAVEMENT MUST BE REPAIRED AT CONTRACTORS EXPENSE AND TO THE SATISFACTION OF NCDOT.
12. ALL PAVEMENTS MARKINGS IN PUBLIC RIGHTS-OF-WAY AND FOR DRIVEWAYS ARE TO BE THERMOPLASTIC AND MEET CITY AND/OR NCDOT STANDARDS.
13. IT IS THE RESPONSIBILITY OF THE SUBDIVIDER TO ERECT OFFICIAL STREET NAME SIGNS AT ALL INTERSECTIONS ASSOCIATED WITH THE SUBDIVISION IN ACCORDANCE WITH THE CITY OF WILMINGTON TECHNICAL STANDARDS AND SPECIFICATIONS MANUAL. THE SUBDIVIDER MAY ACQUIRE AND ERECT OFFICIAL STREET NAME SIGNS OR MAY CHOOSE TO CONTRACT WITH THE CITY TO INSTALL THE STREET SIGNS. SUBDIVIDER SHALL PAY THE COST OF SUCH INSTALLATION.
14. ALL TRAFFIC CONTROL DEVICES (INCLUDING SIGNS AND PAVEMENT MARKINGS) IN AREAS OPEN TO PUBLIC TRAFFIC SHALL BE IN ACCORDANCE WITH THE MANUAL ON "UNIFORM TRAFFIC CONTROL DEVICES FOR STREETS AND HIGHWAYS", CURRENT EDITION.
15. CONTACT CITY OF WILMINGTON TRAFFIC ENGINEERING, 341-7888, TO ENSURE ALL TRAFFIC SIGNAL FACILITIES AND EQUIPMENT ARE SHOWN ON THE PLAN.
16. CONTACT TRAFFIC ENGINEERING AT 341-7888 48 HOURS IN ADVANCE PRIOR TO ANY EXCAVATION IN THE PUBLIC RIGHT-OF-WAY.
17. ANY BROKEN OR MISSING SIDEWALK PANELS WILL BE REPLACED.
18. CONTACT KAREN DIXON AT 341-7888 TO DISCUSS STREET LIGHTING OPTIONS.
19. ALL RIGHT-OF-WAY SHALL MEET NCDOT STANDARD SPECIFICATIONS. A PRE-CONSTRUCTION MEETING MUST BE HELD WITH NCDOT PRIOR TO BEGINNING ANY WORK WITHIN THE PUBLIC RIGHT-OF-WAY.
20. ALL LOTS WITHIN THE DEVELOPMENT SHALL BE FILLED AND HAVE POSITIVE DRAINAGE TO THE APPROPRIATE EASEMENT OR RIGHT-OF-WAY AS APPROVED ON THE PLANS PRIOR TO THE ISSUANCE OF ANY BUILDING PERMITS OR FINAL ACCEPTANCE OF THE RIGHT-OF-WAYS BY THE CITY/COUNTY WHERE FIELD INSPECTIONS ARE REQUIRED. THE CONTRACTOR SHALL PROVIDE A MINIMUM OF 48 HOURS IN ADVANCE TO SCHEDULE SUCH INSPECTIONS.
21. A COMPLETE SET OF APPROVED DRAWINGS AND SPECIFICATIONS MUST BE MAINTAINED ON SITE AT ALL TIMES THAT THE CONTRACTOR IS PERFORMING WORK. THESE DRAWINGS SHALL BE MADE AVAILABLE UPON REQUEST.
22. ANY REVISIONS DURING CONSTRUCTION WHICH ALTER THE LAYOUT, CONSTRUCTION METHODS, RIGHT-OF-WAY LOCATION OR UTILITIES MUST BE SUBMITTED AND APPROVED IN WRITING BY THE ENGINEER.
23. THE CONTRACTOR IS RESPONSIBLE FOR OBTAINING ALL CONSTRUCTION PERMITS NECESSARY FROM OTHER RESPONSIBLE AGENCIES.
24. ALL TREES SHOWING DISTURBANCE WITHIN THE PROTECTED ROOT ZONE SHALL BE PRUNED AND FERTILIZED AT THE DIRECTION OF A CERTIFIED ARBORIST.
25. STORMWATER POND CONTOURS SHOWN HEREIN WILL PROVIDE A DEPTH ONE FOOT GREATER THAN NECESSARY FOR STORM WATER MANAGEMENT. THIS IS TO PROVIDE FOR ONE FOOT OF SILT BUILDUP DURING CONSTRUCTION OF ANY AREA OF ANY POND WHICH SILTS MORE THAN ONE FOOT ABOVE DESIGNED BOTTOM ELEVATION SHALL BE RESTORED TO THE MINIMUM ACCEPTABLE DEPTH OF ONE FOOT LESS THAN ORIGINAL CONSTRUCTED DEPTH.
26. ALL AT GRADE UTILITIES ARE TO BE OUT OF THE CURB LINE.
27. CONTRACTOR WILL BE REQUIRED TO ADJUST MANHOLE FRAMES TO MATCH FINAL GRADE AT NO ADDITIONAL COST.
23. CONTRACTOR SHALL GRADE AREAS TO DRAIN FOR POSITIVE FLOW PRIOR TO FINAL APPROVAL.
24. ALL DRAINAGE WILL BE MADE FUNCTIONAL DAILY AS WORK PROGRESSES.
25. EACH EXISTING ROAD WILL BE CLEANED UP AND RESTORED DAILY.
26. NEW PAVEMENT TO BE FLUSH WITH EDGE OF EXISTING PAVEMENT.
27. ALL STORM DRAIN PIPE INVERTS IN AND OUT ARE THE SAME AS THE BOX INVERT UNLESS OTHERWISE NOTED ON THE PLAN SHEETS AND/OR PROFILES.
28. ALL WATER AND SEWER MATERIALS AND CONSTRUCTION SHALL COMPLY WITH CFPUA STANDARDS AND SPECIFICATIONS.
29. DRY UTILITY PLACEMENT SEQUENCE:
    - 29.1. COORDINATE SCHEDULE WITH ALL UTILITY PROVIDERS;
    - 29.2. ESTABLISH FINAL GRADE;
    - 29.3. POWER WILL PLACE THEIR CABLE FIRST (APPROX. 36" COVER)
    - 29.4. CABLE/TELEPHONE WILL THEN PLACE THEIR CABLE (APPROX. 24" COVER)
30. SEE INDIVIDUAL PLAN SHEETS FOR ADDITIONAL NOTES.

PROJECT CONTACTS:

OWNER:
FLOURNOY DEVELOPMENT COMPANY
900 BROOKSTONE CENTRE PARKWAY
COLUMBUS, GA 31904
(704) 324-4150

ENGINEER:
THOMAS & HUTTON
215 SOUTH KERR AVENUE
WILMINGTON, NC 28403
(910) 332-3360

SURVEYOR:
COX SURVEYORS & ASSOCIATES, PLLC
4761 HWY 501 WEST, SUITE 2
MYRTLE BEACH, SC 29579
(843) 236-7200

PLANNING & ZONING:
CITY OF WILMINGTON
305 CHESTNUT STREET
WILMINGTON, NC 28402
(910) 254-0900

STORMWATER:
CITY OF WILMINGTON
305 CHESTNUT STREET
WILMINGTON, NC 28402
(910) 341-5818

WATER/SEWER:
CAPE FEAR PUBLIC UTILITY AUTHORITY (CFPUA)
235 GOVERNMENT CENTER DRIVE
WILMINGTON, NC 28403
(910) 332-6560

EROSION CONTROL:
NEW HANOVER COUNTY
230 GOVERNMENT CENTER DRIVE
WILMINGTON, NC 28403
(910) 798-7139

AT&T:
LINDA LASHLEY - (910) 341-1624
STEVE DAYVAULT - (910) 392-8712
102 NORTH 4TH STREET
WILMINGTON, NC 28401

TIME WARNER:
BILL DYKES
3809 SHIPYARD BOULEVARD
WILMINGTON, NC 28403
(910) 772-5771

PROGRESS ENERGY:
KEVIN LEATHERWOOD
5700 HOLLY SHELTER ROAD
CASTLE HAYNE, NC 28429
(910) 602-4304

PROJECT INFORMATION

LOCATION:	7910 MARKET STREET, NEW HANOVER COUNTY, NC
TMS:	R03600-005-020-000 (PORTION), R03600-005-022-000
ZONING:	PROPOSED CITY MF-M & CB / EXISTING R-15 & B-2 (NHC)
FLOOD ZONE:	"X" (F.I.R.M. MAP NO. 3720316900J, PANEL NO. 3169 DATED APRIL 3, 2006)
CAMA LAND USE CLASS.	TRANSITION / WATERSHED RESOURCE PROTECTION
PROPERTY ACREAGE:	26.57 ACRES (26.45 MF-M / 0.12 CB)
DISTURBED AREA:	17.6± ACRES
RECEIVING STREAM / CLASSIFICAITON	PAGES CREEK; SA/HQW, INDEX 18-87-22
PROJECT DESCRIPTION	CONSTRUCTION OF 282 MULTI-FAMILY DWELLING UNITS, ASSOCIATED PARKING, DRAINAGE, WATER & SEWER INFRASTRUCTURE. SEE PLAN SHEET G1.3 FOR ADDITIONAL SITE DATA.

North Carolina
One Call Center
Call Before You Dig
"It's The Law"
1-800-632-4949

Approved Construction Plan

	Name	Date
Planning	[signature]	12/12/12
Public Utilities		
Traffic	[signature]	12/12/12
Fire	[signature]	12/13/12

CITY OF WILMINGTON NORTH CAROLINA
Public Services • Engineering Division
APPROVED STORMWATER MANAGEMENT PLAN
Date: 12/12/12 Permit # 2012016R2
Signed: [signature]

NORTH CAROLINA THOMAS & HUTTON ENGINEERING CO. No. F-0871 CERTIFICATE OF AUTHORIZATION

NORTH CAROLINA PROFESSIONAL SEAL 28179 ENGINEER JACK D. REEL 8/27/12

NO.	REVISIONS	BY	DATE
12	ADD PREVIOUS REVISION NOTES	BDR	08/27/12
10	SEE PLAN REVISON SUMMARY SHEET G1.0	BDR	07/24/12
9	SEE PLAN REVISON SUMMARY SHEET G1.0	BDR	07/20/12
6	SEE PLAN REVISON SUMMARY SHEET G1.0	BDR	05/18/12
4	UPDATE ABBREVIATIONS/ADD PERVIOUS PVMT	BDR	04/23/12
1	UPDATE GEN. NOTES, PROJECT INFO. & CONTACTS	BDR	01/25/12

THOMAS & HUTTON
Engineering | Surveying | Planning | GIS | Consulting
215 South Kerr Avenue • Unit B
Wilmington, NC 28403 • 910.332.3360
www.thomasandhutton.com
Savannah, GA | Brunswick, GA | Charleston, SC | Myrtle Beach, SC

FLOURNOY DEVELOPMENT COMPANY
NEW HANOVER COUNTY, NC
AMBERLEIGH SHORES
GENERAL NOTES LEGEND AND INDEX

JOB NO:	J-22667
DATE:	11/15/11
DRAWN:	BDR
DESIGNED:	BDR
REVIEWED:	JDR
APPROVED:	JDR
SCALE:	########

G1.1

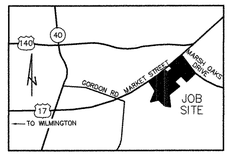

VICINITY MAP
(NOT TO SCALE)

CERTIFICATE DISCLAIMING WATER/SEWER SUITABILITY & WATER / SEWER AVAILABILITY

NOTWITHSTANDING NEW HANOVER COUNTY APPROVAL OF THIS PLAT, LOTS SHOWN ON SAID PLAT MAY NOT RECEIVE HEALTH DEPARTMENT APPROVAL FOR ON SITE SEWAGE DISPOSAL SYSTEMS, NOR FOR INDIVIDUAL WATER SUPPLY SYSTEMS, NOR DOES SUCH APPROVAL GUARANTEE THE AVAILABILITY OF WATER OR SEWER SERVICES FROM THE CAPE FEAR PUBLIC UTILITY AUTHORITY.

CERTIFICATE OF DISCLOSURE FOR PRIVATE DEVELOPMENTS

I (WE) ACKNOWLEDGE THAT NEITHER THE STATE NOR THE COUNTY SHALL BE RESPONSIBLE FOR MAINTENANCE OF ANY STREETS, PARKS, DRAINAGE, OPEN SPACE OR OTHER AREAS WHICH ARE DESIGNATED FOR PRIVATE USE. I (WE) ACKNOWLEDGE THAT PRIOR TO CONTRACTING WITH A PROSPECTIVE BUYER, I SHALL GIVE THE BUYER A WRITTEN STATEMENT WHICH DISCLOSES THE EXISTENCE AND LOCATION OF SUCH PRIVATE AREAS AND SPECIFIES THE MAINTENANCE RESPONSIBILITIES FOR SAME. WHEN APPLICABLE, THE STATEMENT SHALL DISCLOSE THAT THE STREET(S) WILL NOT BE CONSTRUCTED TO MINIMUM STANDARDS SUFFICIENT TO ALLOW THEIR INCLUSION ON THE STATE HIGHWAY SYSTEM FOR MAINTENANCE.

DATE

SIGNATURE OF OWNER(S)

CERTIFICATE OF OWNERSHIP, DEDICATION AND JURISDICTION

I (WE) HEREBY CERTIFY THAT I AM (WE ARE) THE OWNER(S) OF THE PROPERTY SHOWN AND DESCRIBED HEREON AND THAT I (WE) ADOPT THIS PLAN OF SUBDIVISION WITH MY (OUR) FREE CONSENT AND DEDICATE ALL STREETS, ALLEYS, WALKS, PARKS, CONSERVATION SPACE AND OTHER AREAS TO PUBLIC OR PRIVATE USE AS NOTED. ALL ROADS AND DRAINAGE EASEMENTS ARE DEDICATED FOR PUBLIC UTILITY PURPOSES. FURTHER, I (WE) CERTIFY THE LAND AS SHOWN HEREON IS LOCATED WITHIN THE SUBDIVISION JURISDICTION OF NEW HANOVER COUNTY

DATE

SIGNATURE OF OWNER(S)

DATE

SUBORDINATION CONSENT OF MORTGAGEE

HUD CERTIFICATION

I HEREBY CERTIFY TO THE U.S. DEPARTMENT OF HOUSING AND URBAN DEVELOPMENT (HUD), FLOURNOY DEVELOPMENT COMPANY, FIRST AMERICAN TITLE INSURANCE COMPANY, OPPENHEIMER MULTIFAMILY HOUSING & HEALTHCARE FINANCE, INC., AND TO THEIR SUCCESSORS AND ASSIGNS, THAT:

I MADE AN ON THE GROUND SURVEY PER RECORD DESCRIPTION OF THE LAND SHOWN HEREON LOCATED IN WILMINGTON, HARNETT TOWNSHIP, NEW HANOVER COUNTY, NORTH CAROLINA, ON OCTOBER 27, 2010 AND UPDATED DECEMBER 29, 2011; AND THAT IT AND THIS MAP WAS MADE IN ACCORDANCE WITH THE HUD SURVEY INSTRUCTIONS AND REPORT, HUD-92457M, AND THE REQUIREMENTS FOR AN ALTA/ACSM LAND TITLE SURVEY, AS DEFINED IN THE MINIMUM STANDARD DETAIL REQUIREMENTS FOR ALTA/ACSM LAND TITLE SURVEYS DATED 2011 MINIMUM STANDARD DETAIL REQUIREMENTS FOR ALTA/ACSM LAND TITLE SURVEYS.

TO THE BEST OF MY KNOWLEDGE, BELIEF AND INFORMATION, EXCEPT AS SHOWN HEREON: THERE ARE NO ENCROACHMENTS EITHER WAY ACROSS PROPERTY LINES AND LINES OF ACTUAL POSSESION ARE THE SAME; AND THE PREMISES ARE FREE OF ANY 100/500 YEAR RETURN FREQUENCY FLOOD HAZARD, AND SUCH FLOOD FREE CONDITION IS SHOWN ON THE FEDERAL FLOOD INSURANCE RATE MAP 3720316900J COMMUNITY OF NEW HANOVER COUNTY PANEL NO. 3169 J.

NOTES:
1) TAX PARCEL NO. R03600-005-020-000 & R03600-005-022-000.
2) ACCORDING TO F.I.R.M. MAP NO. 3720316900J, PANEL NO. 3169, DATED APRIL 3, 2006, IT IS MY OPINION THE PROPERTY SHOWN ON THIS PLAT IS LOCATED IN FLOOD ZONE X-DETERMINED TO BE OUTSIDE 0.2% ANNUAL CHANCE FLOODPLAIN AND IS SUBJECT TO REVIEW BY THE COUNTY FLOODPLAIN ADMINISTRATOR / FEMA OFFICER.
3) ALL BEARINGS AND COORDINATES SHOWN ON THIS SURVEY ARE BASED ON NORTH CAROLINA STATE PLANE COORDINATE SYSTEM NAD83, (2005 ADJUSTMENT) ON SITE CONTROL ESTABLISHED FROM GPS OBSERVATIONS WITH CORRECTIONS PROVIDED BY THE N.C. V.R.S NETWORK AND VERIFIED FROM NCGS MONUMENT "PATROL 1963." ALL DISTANCES ARE GROUND LEVEL DISTANCES, NOT GRID DISTANCES. TO CONVERT DISTANCES TO GRID DISTANCES; MULTIPLY BY COMBINED SCALE FACTOR 1.00002454.
4) THIS SURVEY IS VALID ONLY IF THE PRINT OF SAME HAS THE ORIGINAL SIGNATURE AND EMBOSSED SEAL OF THE LAND SURVEYOR.
5) NO TITLE SEARCH PERFORMED BY THIS OFFICE ON THIS DATE.
6) THE PROPERTY PLATTED HEREON IS SUBJECT TO ALL EASEMENTS AND RESTRICTIONS OF RECORD.
7) DEED REFERENCE: D.B. 681, PG. 109 & D.B. 1196, PG. 1056.
8) SUBSURFACE AND ENVIRONMENTAL CONDITIONS WERE NOT EXAMINED ON THIS DATE. THE SURVEYOR MADE A DILIGENT ATTEMPT TO LOCATE UNDERGROUND UTILITIES WHERE OBVIOUS, VISIBLE MARKS HAVE BEEN ESTABLISHED. SURVEYOR MAKES NO STATEMENT TO THE ACCURACY OF SAID MARKINGS AND THEIR SUBSEQUENT LOCATIONS SHOWN HEREON.
9) CURRENT OWNER: BAYSHORE ESTATES, INC., A NORTH CAROLINA CORPORATION.
10) WETLANDS SHOWN HEREON COMPILED FROM REFERENCE MAP NO. 13.
11) FIRST AMERICAN TITLE INSURANCE COMPANY
POLICY FILE NUMBER: NCS-451497-ATL
EFFECTIVE DATE: AUGUST 27, 2010; 10:57 AM. REVISED OCTOBER 25, 2010; 10:22 AM EDT.

SCHEDULE B – SECTION II EXCEPTIONS:

THE SURVEYOR OFFERS THE FOLLOWING OPINIONS BASED ON EVEIDENCE OF RECORDED INSTRUMENTS, FIELD OBSERVATIONS, AND PAROL EVIDENCE FROM MUNICIPALITIES AND UTILITY COMPANIES:

3. RIGHT(S) OF WAY TO BELLSOUTH RECORDED IN BOOK 2128, PAGE 313. NEW HANOVER REGISTRY DOES AFFECT SAID PREMISES AS SHOWN HEREON.

4. EASEMENTS TO CAROLINA POWER & LIGHT COMPANY
a. BOOK 862, PAGE 286, NEW HANOVER COUNTY REGISTRY, DOES AFFECT SAID PREMISES. EASEMENT IS BLANKET IN NATURE, NO WIDTH PROVIDED. LOCATION SHOWN HEREON INDICATE AREAS SURVEYOR CAN IDENTIFY BY PROVIDED INSTRUMENT. SURVEYOR CANNOT DETERMINE ENTIRE LOCATION OF EASEMENT FROM PROVIDED INSTRUMENT.
b. BOOK 639, PAGE 27 AND BOOK 672, PAGE 337, NEW HANOVER COUNTY REGISTRY, MAY AFFECT SAID PREMISES. LOCATION OF EASEMENT CANNOT BE ACCURATELY LOCATED FROM PROVIDED INSTRUMENT.
c. BOOK 560, PAGE 537, NEW HANOVER COUNTY REGISTRY, MAY AFFECT SAID PREMISES. LOCATION OF EASEMENT CANNOT BE ACCURATELY LOCATED FROM PROVIDED INSTRUMENT.
c1. BOOK 560, PAGE 567, NEW HANOVER COUNTY REGISTRY, DOES AFFECT SAID PREMISES. EASEMENT IS BLANKET IN NATURE, NO WIDTH PROVIDED. APPROXIMATE LOCATION SHOWN HEREON.
d. BOOK 278, PAGE 138, NEW HANOVER COUNTY REGISTRY, DOES AFFECT SAID PREMISES AS SHOWN HEREON.
e. BOOK 672, PAGE 337, NEW HANOVER COUNTY REGISTRY, MAY AFFECT SAID PREMISES. EASEMENT CANNOT BE ACCURATELY LOCATED FROM PROVIDED INSTRUMENT.
f. BOOK 482, PAGE 435, NEW HANOVER COUNTY REGISTRY, MAY AFFECT SAID PREMISES. LOCATION OF EASEMENT CANNOT BE ACCURATELY LOCATED FROM PROVIDED INSTRUMENT.

5. RIGHT OF WAY FOR ACCESS, INGRESS AND EGRESS OVER AN OLD DIRT IN FAVOR OF DORIS RIGGS SMITH CONTAINED IN DEED RECORDED IN BOOK 2532, PAGE 429, NEW HANOVER COUNTY REGISTRY DOES AFFECT SAID PREMISES (UNDEFINED WIDTH) AS APPROXIMATELY SHOWN HEREON.

6. RIGHT OF WAY FOR ACCESS, INGRESS AND EGRESS OVER AN OLD DIRT IN FAVOR OF BOBBY HOLT RECORDED IN BOOK 1612, PAGE 194, NEW HANOVER COUNTY REGISTRY IS SUBJECT TO SUITABLE SUBSTITUTION BY PURCHASER AND DOES AFFECT SAID PREMISES AS SHOWN HEREON.

8. RIGHTS OF OTHERS IN AND TO THE CONTINUOUS AND UNINTERRUPTED FLOW TO SPRINGS, BRANCHES, CREEKS, DITCHES AND CANALS THAT CROSS THE LAND, INCLUDING SPRING BRANCH, MARSHY BRANCH AND MIDDLE BRANCH MAY AFFECT SAID PREMISES. NO INSTRUMENT PROVIDED TO SURVEYOR INDICATING OTHER'S RIGHTS OF USE.

9. DRAINAGE EASEMENTS AS SHOWN ON MAPS RECORDED IN MAP BOOK 38, PAGES 100 AND 178, NEW HANOVER COUNTY REGISTRY DOES AFFECT SAID PREMISES AS SHOWN HEREON.

11. 30' DRAINAGE EASMENT TO THE DEPARTMENT OF TRANSPORTATION RECORDED IN BOOK 1649, PAGE 128, NEW HANOVER COUNTY REGISTRY DOES AFFECT SAID PREMISES AS SHOWN HEREON.

12. RIGHTS OF PARTIES IN POSSESION AS TENNANTS ONLY UNDER UNRECORDED LEASE(S) OR RENTAL AGREEMENTS MAY AFFECT SAID PREMISES. NO INSTRUMENT PROVIDED.

14. ACCESS EASEMENT RECORDED IN MAP BOOK 37, PAGE 101, NEW HANOVER COUNTY REGISTRY DOES AFFECT SAID PREMISES AS SHOWN ON HEREON.

15. 30' DRAINAGE EASEMENT RECORDED IN BOOK 3660, PAGE 27, NEW HANOVER COUNTY REGISTRY DOES AFFECT SAID PREMISES AS SHOWN HEREON.

16. 20' UTILITY EASEMENT TO NEW HANOVER COUNTY WATER & SEWER DISTRICT RECORDED IN BOOK 2304, PAGE 351, NEW HANOVER COUNTY REGISTRY DOES AFFECT SAID PREMISES AS SHOWN HEREON.

THIS INSTRUMENT AND REPRODUCIBLE COPIES OF THIS INSTRUMENT ARE OWNED BY COX SURVEYORS & ASSOCIATES, PLLC. REPRODUCTIONS OF THIS INSTRUMENT ARE NOT PERMITTED WITHOUT WRITTEN CONSENT OF COX SURVEYORS & ASSOCIATES, PLLC UNLESS OBTAINED THROUGH MATTERS OF PUBLIC RECORD.
ALTERATIONS TO THIS DOCUMENT ARE NOT PERMITTED.

LINE	BEARING	LENGTH
L1	N 27°43'47" E	6.49
L2	N 16°19'51" E	30.04
L3	N 04°32'59" W	63.00
L4	S 42°47'04" W	22.05
L5	S 36°42'45" W	33.50
L6	S 30°21'37" W	35.26
L7	S 21°57'54" W	16.55
L8	S 00°52'51" W	42.97
L9A	S 04°16'43" E	19.95
L9B	S 04°16'43" E	21.16
L10	S 06°05'56" W	34.50
L11	S 31°33'26" W	41.71
L12	S 58°02'59" E	57.91
L13	S 55°25'42" E	31.23
L14	S 57°34'03" E	54.43
L15	S 65°12'40" E	29.06
L16	S 75°35'10" E	33.12
L17	S 72°31'01" E	64.30
L18	S 65°15'19" E	43.59
L19	S 46°47'34" W	21.34

CERTIFICATE OF APPROVAL

NEW HANOVER COUNTY PLANNING DEPARTMENT

DATE

PLANNING DIRECTOR

REVIEW OFFICER'S CERTIFICATE

STATE OF NORTH CAROLINA NEW HANOVER COUNTY

I, _____, REVIEW OFFICER OF NEW HANOVER COUNTY, CERTIFY THAT THE MAP OR PLAT TO WHICH THIS CERTIFICATION IS AFFIXED MEETS ALL STATUTORY REQUIREMENTS FOR RECORDING.

DATE

REVIEW OFFICER

CERTIFICATE OF REGISTRATION BY REGISTER OF DEEDS

NORTH CAROLINA NEW HANOVER COUNTY

FILED FOR REGISTRATION ON THE _____ DAY OF _____, 20_____

AT _____ (A.M./P.M.) AND DULY RECORDED IN MAP BOOK _____

AT PAGE _____.

REGISTER OF DEEDS

BY

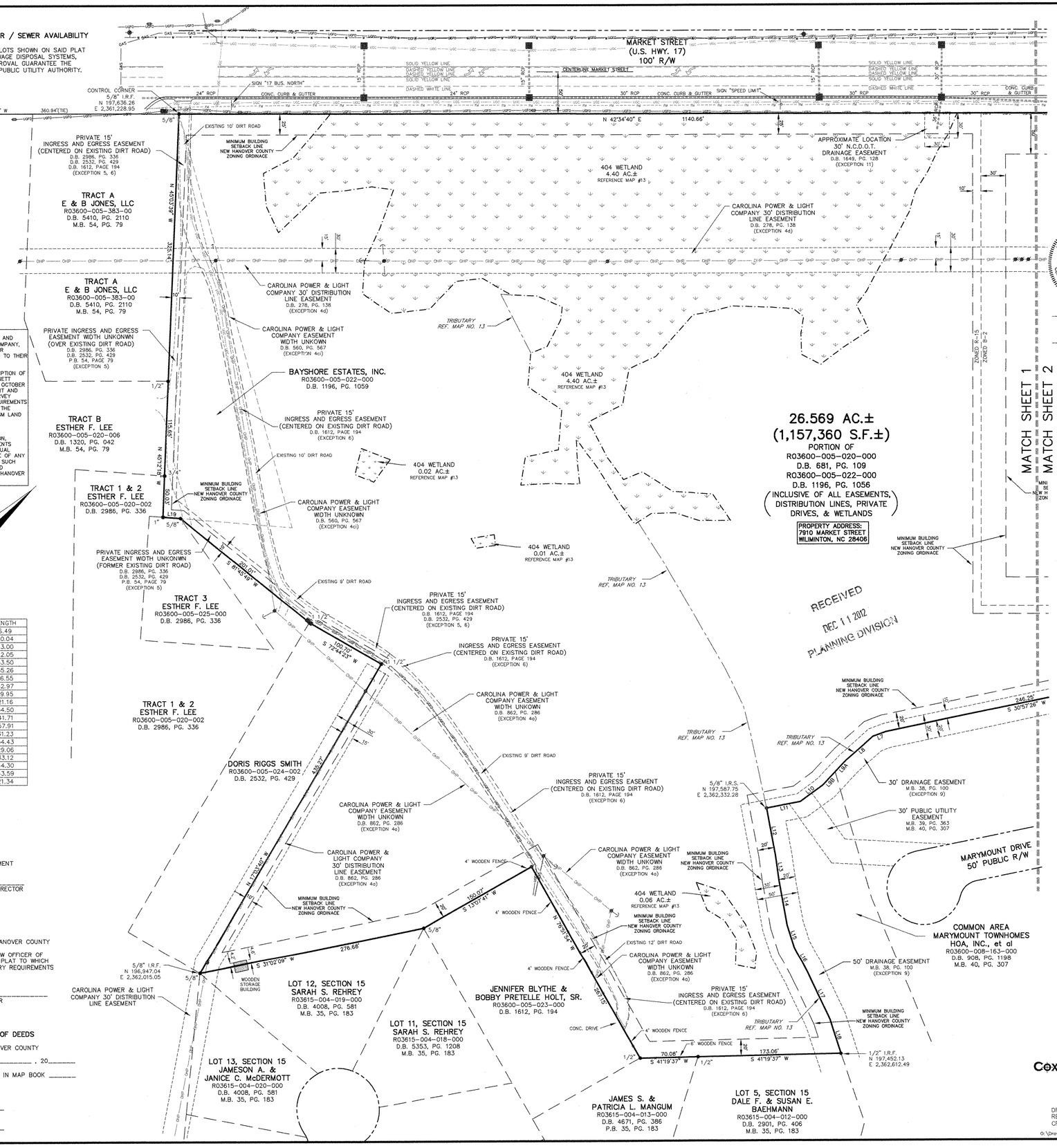

TO: THE U.S. DEPARTMENT OF HOUSING AND URBAN DEVELOPMENT (HUD), FLOURNOY DEVELOPMENT COMPANY, FIRST AMERICAN TITLE INSURANCE COMPANY, OPPENHEIMER MULTIFAMILY HOUSING & HEALTHCARE FINANCE, INC.,

THIS IS TO CERTIFY THAT THIS MAP OR PLAT AND THE SURVEY ON WHICH IT IS BASED WERE MADE IN ACCORDANCE WITH THE "MINIMUM STANDARD DETAIL REQUIREMENTS FOR ALTA/ACSM LAND TITLE SURVEYS," JOINTLY ESTABLISHED AND ADOPTED BY ALTA AND NSPS IN 2011, AND INCLUDES ITEMS 1, 2, 3, 4, 6a, 6b, 7a, 8, 9, 10a, 10b, 11b, 12, 13, 16, 17, 18, 19, 20o OF TABLE A THEREOF. THE FIELD WORK WAS COMPLETED ON DECEMBER 28, 2011.

THIS SURVEY CREATES A SUBDIVISION OF LAND WITHIN THE AREA OF A COUNTY OR MUNICIPALITY THAT HAS AN ORDINANCE THAT REGULATES PARCELS OF LAND.

FURTHERMORE: I, J. JASON COX, CERTIFY THAT THIS PLAT WAS DRAWN FROM AN ACTUAL FIELD SURVEY UNDER MY SUPERVISION (DEED DESCRIPTION RECORDED IN BOOKS NOTED ON PLAT); THAT THE BOUNDARIES NOT SURVEYED ARE CLEARLY INDICATED AS DRAWN FROM INFORMATION NOTED HEREON, THAT THE RATIO OF PRECISION AS CALCULATED IS 1 : 49,000+; THAT THIS PLAT WAS PREPARED IN ACCORDANCE WITH G.S. 47-30 AS AMENDED. WITNESS MY HAND AND SEAL THIS 29th DAY OF DECEMBER, 2011.

NORTH CAROLINA
COX SURVEYORS & ASSOCIATES, PLLC
No. P-0801
CERTIFICATE OF AUTHORIZATION

NORTH CAROLINA PROFESSIONAL SEAL L-4851 SURVEYOR J. JASON COX
12-29-2011

J. JASON COX
NORTH CAROLINA PROFESSIONAL LAND SURVEYOR
LICENSE NO. L-4851

LEGEND

- CONCRETE MONUMENT
- CABLE BOX
- COMPUTED BOUNDARY POINT
- CONTROL POINT
- CHECK VALVE
- I.R.F. IRON REBAR FOUND
- I.R.S. IRON REBAR SET
- I.P.F. IRON PIPE FOUND
- C.M.F. CONCRETE MONUMENT FOUND
- CONC. CONCRETE
- R.C.P. REINFORCED CONCRETE PIPE
- D.B. DEED BOOK
- FLOOD LAMP
- ELECTRIC BOX
- ELECTRIC METER
- GAS VALVE
- H&T HUB & TACK
- FIRE HYDRANT
- GUY WIRE
- IRRIGATION CONTROL VALVE
- IRON PIPE FOUND
- 5/8" IRON REBAR SET
- IRON REBAR FOUND
- LIGHT POLE
- M.B. MAP BOOK
- PG. PAGE
- R/W RIGHT-OF-WAY
- SANITARY MANHOLE
- SEWER CLEAN OUT
- SIGN
- TELEPHONE BOX
- UNDERGROUND FIBER-OPTIC MARKER
- –OHP– OVERHEAD ELECTRIC LINE
- –UGP– UNDERGROUND ELECTRIC LINE
- –UGC– UNDERGROUND COMMUNICATION LINE
- –UGFO– UNDERGROUND FIBER-OPTIC LINE
- –GAS– UNDERGROUND GAS LINE
- –SS– UNDERGROUND SANITARY SEWER LINE
- –W– UNDERGROUND WATER LINE
- –X– 4' CHAIN-LINK FENCE
- WATER METER
- WATER VALVE
- WATER VALVE MARKER
- BOUNDARY LINE
- RIGHT-OF-WAY LINE
- ADJACENT PROPERTY LINE
- TIE LINE
- DRAINAGE LINE

SHEET 1 OF 2
ALTA/ACSM LAND TITLE SURVEY OF

AMBERLEIGH SHORES
26.569 ACRES±
(1,157,360 S.F.±)
THE LANDS OF BAYSHORE ESTATES, INC.

PREPARED FOR:
FIRST AMERICAN TITLE INSURANCE COMPANY & FLOURNOY DEVELOPMENT COMPANY

HARNETT TOWNSHIP
NEW HANOVER COUNTY NORTH CAROLINA
60 0 30 60 120
SCALE: 1 INCH = 60 FEET

SURVEYED & MAPPED BY
COX SURVEYORS & ASSOCIATES, PLLC
4761 HWY. 501 WEST, SUITE 2
MYRTLE BEACH, SC 29579 (843) 236-7200
coxsurveyors @ sccoast.net

DRAWN BY	JJC	FIELD DATE	SEPT/2010 & DEC 2011
REVIEWED	JJC	PLAT DATE	10/27/2010
CREW CHIEF	CTB	LAST REVISED	12/29/2011

O:\Drawings-CSA\00100\00158 Amber\00158 ALTA(26-122811).dwg: 12/29/2011 1:47 PM

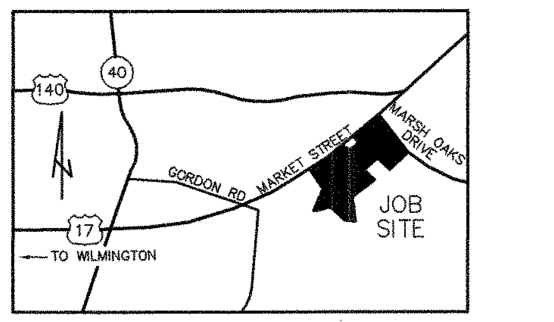

VICINITY MAP
(NOT TO SCALE)

CERTIFICATE OF REGISTRATION BY REGISTER OF DEEDS

NORTH CAROLINA NEW HANOVER COUNTY

FILED FOR REGISTRATION ON THE ______ DAY OF ________ , 20______

AT __________ (A.M./P.M.) AND DULY RECORDED IN MAP BOOK _______

AT PAGE ___________ .

REGISTER OF DEEDS

BY

REVIEW OFFICER'S CERTIFICATE

STATE OF NORTH CAROLINA NEW HANOVER COUNTY

I, ______________________________ , REVIEW OFFICER OF NEW HANOVER COUNTY, CERTIFY THAT THE MAP OR PLAT TO WHICH THIS CERTIFICATION IS AFFIXED MEETS ALL STATUTORY REQUIREMENTS FOR RECORDING.

DATE REVIEW OFFICER

CERTIFICATE OF APPROVAL

NEW HANOVER COUNTY PLANNING DEPARTMENT

DATE PLANNING DIRECTOR

CERTIFICATE DISCLAIMING WATER/SEWER SUITABILITY & WATER / SEWER AVAILABILITY

NOTWITHSTANDING NEW HANOVER COUNTY APPROVAL OF THIS PLAT, LOTS SHOWN ON SAID PLAT MAY NOT RECEIVE HEALTH DEPARTMENT APPROVAL FOR ON SITE SEWAGE DISPOSAL SYSTEMS, NOR FOR INDIVIDUAL WATER SUPPLY SYSTEMS, NOR DOES SUCH APPROVAL GUARANTEE THE AVAILABILITY OF WATER OR SEWER SERVICES FROM THE CAPE FEAR PUBLIC UTILITY AUTHORITY.

TO: THE U.S. DEPARTMENT OF HOUSING AND URBAN DEVELOPMENT (HUD), FLOURNOY DEVELOPMENT COMPANY, FIRST AMERICAN TITLE INSURANCE COMPANY, OPPENHEIMER MULTIFAMILY HOUSING & HEALTHCARE FINANCE, INC.,

THIS IS TO CERTIFY THAT THIS MAP OR PLAT AND THE SURVEY ON WHICH IT IS BASED WERE MADE IN ACCORDANCE WITH THE "MINIMUM STANDARD DETAIL REQUIREMENTS FOR ALTA/ACSM LAND TITLE SURVEYS," JOINTLY ESTABLISHED AND ADOPTED BY ALTA AND NSPS IN 2005, AND INCLUDES ITEMS 1, 2, 3, 4, 6a, 6b, 7a, 8, 9, 10a, 10b, 11b, 12, 13, 16, 17, 18, 19, 20a OF TABLE A THEREOF. THE FIELD WORK WAS COMPLETED ON DECEMBER 28, 2011.

THIS SURVEY CREATES A SUBDIVISION OF LAND WITHIN THE AREA OF A COUNTY OR MUNICIPALITY THAT HAS AN ORDINANCE THAT REGULATES PARCELS OF LAND.

FURTHERMORE: I, J. JASON COX, CERTIFY THAT THIS PLAT WAS DRAWN FROM AN ACTUAL FIELD SURVEY UNDER MY SUPERVISION (DEED DESCRIPTION RECORDED IN BOOKS NOTED ON PLAT); THAT THE BOUNDARIES NOT SURVEYED ARE CLEARLY INDICATED AS DRAWN FROM INFORMATION NOTED HEREON, THAT THE RATIO OF PRECISION AS CALCULATED IS 1 : 49,000+; THAT THIS PLAT WAS PREPARED IN ACCORDANCE WITH G.S. 47-30 AS AMENDED. WITNESS MY HAND AND SEAL THIS 29th DAY OF DECEMBER, 2011.

NORTH CAROLINA COX SURVEYORS & ASSOCIATES, PLLC No. P-0801 CERTIFICATE OF AUTHORIZATION

NORTH CAROLINA PROFESSIONAL SEAL L-4851 LAND SURVEYOR J. JASON COX 12/29/2011

J. JASON COX
NORTH CAROLINA PROFESSIONAL LAND SURVEYOR
LICENSE NO. L-4851

AMBERLEIGH SHORES
A PORTION OF THE LANDS OF
BAYSHORE ESTATES, INC.

ALL AND SINGULAR, ALL THAT CERTAIN PIECE, PARCEL OR LOT OF LAND WITH ANY IMPROVEMENTS THEREON; SITUATE, LYING AND BEING IN HARNETT TOWHSHIP, COUNTY OF NEW HANOVER, STATE OF NORTH CAROLINA; BEING BOUNDED ON THE NORTH BY MARSH OAKS DRIVE HAVING A VARIABLE RIGHT-OF-WAY, ON THE EAST BY MARYMOUNT TOWNHOMES, HOA, INC., CAPE FEAR PUBLIC UTILITY AUTHORITY, MARYMOUNT TOWNHOMES HOA, INC, et al, DALE F. & SUSAN E. BAEMANN, JAMES S. & PATRICIA L. MANGUM, JENNIFER BLYTHE & BOBBY PRETELLE HOLT, SR., AND SARA S. REHREY, ON THE SOUTH BY DORIS RIGGS SMITH, ESTHER F. LEE, AND E & B JONES, LLC, ON THE WEST BY MARKET STREET (U.S. HIGHWAY 17) HAVING A 100' RIGHT-OF-WAY, WILLIAM Q. & ROBIN S. GOODMAN, JAMES S. & BARBARA W. FURR, BAYSHORE ESTATES, INC., A NORTH CAROLINA CORPORATION, AND BEING MORE PARTICULARLY DESCRIBED AS FOLLOWS:

COMMENCING AT AN ALUMINUM MONUMENT STAMPED "MO-1 7-08" LOCATED WITHIN THE EASTERN EDGE OF RIGHT-OF-WAY OF MARKET STREET AND NORTH WESTERN RIGHT-OF-WAY OF MARSH OAKS DRIVE, HAVING A NORTH CAROLINA STATE PLANE GRID COORDINATE OF NORTH 198,893.41, EAST 2,362,381.39; THENCE A BEARING OF S 27°43'47" W, A DISTANCE OF 6.49 FEET TO A 5/8" IRON REBAR SET AND THE POINT OF BEGINNING; THENCE ALONG THE SOUTHERN EDGE OF MARSH OAKS DRIVE VARIABLE PUBLIC RIGHT-OF-WAY A BEARING OF S 80°50'37" E, A DISTANCE OF 44.40 FEET TO A 5/8" IRON REBAR SET; THENCE A BEARING OF S 37°04'05" E, A DISTANCE OF 74.59 FEET TO A 5/8" IRON REBAR SET; THENCE ALONG A CURVE TO THE LEFT, A CHORD BEARING OF S 47°09'35" E, A CHORD DISTANCE OF 249.87 FEET, (DELTA= 20°11'00", RADIUS= 713.00 FEET, ARC= 251.17 FEET) TO A 5/8" IRON REBAR SET AND POINT OF BEGINNING; THENCE ALONG A COMPOUND CURVE TO THE LEFT, A CHORD BEARING OF S 62°11'01" E, A CHORD DISTANCE OF 122.60 FEET, (DELTA= 09°51'52", RADIUS= 713.00 FEET, ARC= 122.75 FEET); THENCE ALONG A COMPOUND CURVE TO THE LEFT, A CHORD BEARING OF S 68°19'19" E, A CHORD DISTANCE OF 30.02 FEET, (DELTA= 2°24'45", RADIUS= 713.00 FEET, ARC= 30.02 FEET) TO A 5/8" IRON REBAR SET; THENCE A BEARING OF S 68°55'06" E, A DISTANCE OF 30.92 FEET TO A POINT; THENCE A BEARING OF S 68°55'06" E, A DISTANCE OF 69.22 FEET TO A 5/8" IRON REBAR SET; THENCE ALONG A CURVE TO THE LEFT, A CHORD BEARING OF S 73°56'38" E, A CHORD DISTANCE OF 87.48 FEET, (DELTA= 9°28'04", RADIUS= 530.00 FEET, ARC= 87.58 FEET) TO A 5/8" IRON REBAR FOUND, HAVING A NORTH CAROLINA STATE PLANE COORDINATE OF NORTH 198,522.66, EAST 2,362,964.21; THENCE LEAVING SAID EDGE OF MARSH OAKS DRIVE RIGHT-OF-WAY ALONG THE LANDS OF MARYMOUNT TOWNHOMES HOA, INC. A BEARING OF S 41°43'27" W, A DISTANCE OF 146.69 FEET TO A 5/8" REBAR SET; THENCE ALONG THE LANDS OF CAPE FEAR PUBLIC UTILITY AUTHORITY A BEARING OF N 48°16'33" W, A DISTANCE OF 107.17 FEET TO A POINT; THENCE A BEARING OF N 48°16'33" W, A DISTANCE OF 55.66 FEET TO A 5/8" IRON REBAR SET; THENCE A BEARING OF S 86°43'36" W, A DISTANCE OF 11.84 FEET TO A POINT; THENCE A BEARING OF S 86°43'36" W, A DISTANCE OF 61.21 FEET TO A 5/8" IRON REBAR SET; THENCE A BEARING OF S 41°43'27" W, A DISTANCE OF 150.00 FEET TO A 5/8" IRON REBAR SET; THENCE A BEARING OF S 48°16'33" E, A DISTANCE OF 214.48 FEET TO A 5/8" IRON REBAR SET; THENCE ALONG THE LANDS OF MARYMOUNT TOWNHOMES HOA, INC. A BEARING OF S 38°13'51" W, A DISTANCE OF 124.28 FEET TO A POINT; THENCE A BEARING OF S 42°47'04" W, A DISTANCE OF 22.05 FEET TO A POINT; THENCE A BEARING OF S 42°47'04" W, A DISTANCE OF 168.39 FEET TO A POINT; THENCE A BEARING OF S 36°42'45" W, A DISTANCE OF 33.50 FEET TO A POINT; THENCE A BEARING OF S 30°21'37" W, A DISTANCE OF 35.26 FEET TO A POINT; THENCE A BEARING OF S 30°57'26" W, A DISTANCE OF 246.25 FEET TO A POINT; THENCE A BEARING OF S 21°57'54" W, A DISTANCE OF 16.55 FEET TO A POINT; THENCE A BEARING OF S 00°52'51" W, A DISTANCE OF 42.97 FEET TO A POINT; THENCE A BEARING OF S 04°16'43" E, A DISTANCE OF 19.95 FEET TO A POINT; THENCE ALONG THE LANDS OF MARYMOUNT TOWNEHOMES HOA, INC., et al A BEARING OF S 04°16'43" E, A DISTANCE OF 21.16 FEET TO A POINT; THENCE A BEARING OF S 06°05'56" W, A DISTANCE OF 34.50 FEET TO A POINT; THENCE A BEARING OF S 31°33'26" W, A DISTANCE OF 41.71 FEET TO A 5/8" IRON REBAR SET, HAVING A NORTH CAROLINA STATE PLANE COORDINATE VALUE OF NORTH 197,587.75, EAST 2,362,332.28; THENCE A BEARING OF S 58°02'59" E, A DISTANCE OF 57.91 FEET TO A POINT; THENCE A BEARING OF S 55°25'42" E, A DISTANCE OF 31.23 FEET TO A POINT; THENCE A BEARING OF S 57°34'03" E, A DISTANCE OF 54.43 FEET TO A POINT; THENCE A BEARING OF S 65°12'40" E, A DISTANCE OF 29.06 FEET TO A POINT; THENCE A BEARING OF S 75°35'10" E, A DISTANCE OF 33.12 FEET TO A POINT; THENCE A BEARING OF S 72°31'01" E, A DISTANCE OF 64.30 FEET TO A POINT; THENCE A BEARING OF S 65°15'19" E, A DISTANCE OF 43.59 FEET TO A 1/2" IRON REBAR FOUND, HAVING A NORTH CAROLINA STATE PLANE COORDINATE VALUE OF NORTH 197,452.13, EAST 2,362,612.49; THENCE ALONG THE LANDS OF DALE F. & SUSAN E. BAEMANN A BEARING OF S 41°19'37" W, A DISTANCE OF 173.06 FEET TO A 1/2" IRON REBAR FOUND; THENCE ALONG THE LANDS OF JAMES S. & PATRICIA L. MANGUM A BEARING OF S 41°19'37" W, A DISTANCE OF 70.08 FEET TO A 1/2" IRON REBAR FOUND; THENCE ALONG THE LANDS OF JENNIFER BLYTHE & BOBBY PRETELLE HOLT, SR. A BEARING OF N 76°51'54" W, A DISTANCE OF 267.15 FEET TO A 5/8" IRON REBAR SET; THENCE A BEARING OF S 13°07'41" W, A DISTANCE OF 150.07 FEET TO A 5/8" IRON REBAR FOUND; THENCE ALONG THE LANDS OF SARAH S. REHREY A BEARING OF S 31°02'09" W, A DISTANCE OF 276.68 FEET TO A 5/8" IRON REBAR FOUND, HAVING A NORTH CAROLINA STATE PLANE COORDINATE VALUE OF NORTH 196,947.04, EAST 2,362,015.05; THENCE ALONG THE LANDS OF DORIS RIGGS SMITH A BEARING OF N 17°03'40" W, A DISTANCE OF 435.27 FEET TO A 1 1/2" IRON PIPE FOUND; THENCE A BEARING OF S 72°44'23" W, A DISTANCE OF 100.70 FEET TO A 1 1/2" IRON PIPE FOUND; THENCE ALONG THE LANDS OF ESTHER F. LEE (TRACT 1 & 2) A BEARING OF S 81°45'49" W, A DISTANCE OF 201.01 FEET TO A 5/8" IRON REBAR FOUND; THENCE ALONG THE LANDS OF ESTHER F. LEE (TRACT 3) A BEARING OF S 46°47'34" W, A DISTANCE OF 21.34 FEET TO A 1" IRON PIPE FOUND; THENCE ALONG THE LANDS OF ESTHER F. LEE (TRACT 1 & 2) A BEARING OF N 45°12'18" W, A DISTANCE OF 50.03 FEET TO A 3/4" IRON PIPE FOUND; THENCE ALONG THE LANDS OF ESTHER F. LEE (TRACT B) A BEARING OF N 45°12'18" W, A DISTANCE OF 115.65 FEET TO A 1/2" IRON REBAR FOUND; THENCE ALONG THE LANDS OF E & B JONES, LLC A BEARING OF N 45°03'39" W, A DISTANCE OF 325.14 FEET TO A 5/8" IRON REBAR FOUND, HAVING A NORTH CAROLINA STATE PLANE COORDINATE VALUE OF NORTH 197,636.26, EAST 2,361,228.95; THENCE ALONG THE EASTERN EDGE OF MARKET STREET (U.S. HIGHWAY 17) RIGHT-OF-WAY A BEARING OF N 42°34'40" E, A DISTANCE OF 1140.66 FEET TO A 5/8" IRON REBAR SET; THENCE ALONG THE LANDS OF WILLIAM Q. & ROBIN S. GOODMAN A BEARING OF S 47°30'43" E, A DISTANCE OF 193.31 FEET TO A 3/4" IRON PIPE FOUND; THENCE A BEARING OF S 47°30'43" E, A DISTANCE OF 6.49 FEET TO A CONCRETE MONUMENT WITH 1/2" IRON REBAR FOUND; THENCE ALONG THE LANDS JAMES S. & BARBARA W. FURR A BEARING OF S 47°30'43" E, A DISTANCE OF 200.19 FEET TO A TALL 1" IRON PIPE FOUND; THENCE A BEARING OF N 42°29'17" E, A DISTANCE OF 200.29 FEET TO A 5/8" IRON REBAR SET; THENCE A BEARING OF N 47°30'43" W, A DISTANCE OF 39.70 FEET TO A POINT; THENCE ALONG THE LANDS OF BAYSHORE ESTATES, INC., A NORTH CAROLINA CORPORATION A BEARING OF N 42°34'46" E, A DISTANCE OF 367.56 FEET TO A 5/8" IRON REBAR SET AND POINT OF BEGINNING AND CONTAINING 26.569 ACRES+/- (1,157,360 SQUARE FEET).

NOTES:
1) TAX PARCEL NO. R03600-005-020-000 & R03600-005-022-000.
2) ACCORDING TO F.I.R.M. MAP NO. 3720316900J, PANEL NO. 3169, DATED APRIL 3, 2006, IT IS MY OPINION THE PROPERTY SHOWN ON THIS PLAT IS LOCATED IN FLOOD ZONE X- DETERMINED TO BE OUTSIDE 0.2% ANNUAL CHANCE FLOODPLAIN AND IS SUBJECT TO REVIEW BY THE COUNTY FLOODPLAIN ADMINISTRATOR / FEMA OFFICER.
3) ALL BEARINGS AND COORDINATES SHOWN ON THIS SURVEY ARE BASED ON NORTH CAROLINA STATE PLANE COORDINATE SYSTEM NAD83, (2005 ADJUSTMENT) ON SITE CONTROL ESTABLISHED FROM GPS OBSERVATIONS WITH CORRECTIONS PROVIDED BY THE N.C. V.R.S NETWORK AND VERIFIED FROM NCGS MONUMENT "PATROL 1963." ALL DISTANCES ARE GROUND LEVEL DISTANCES, NOT GRID DISTANCES. TO CONVERT DISTANCES TO GRID DISTANCES; MULTIPLY BY COMBINED SCALE FACTOR 1.00002454.
4) THIS SURVEY IS VALID ONLY IF THE PRINT OF SAME HAS THE ORIGINAL SIGNATURE AND EMBOSSED SEAL OF THE LAND SURVEYOR.
5) NO TITLE SEARCH PERFORMED BY THIS OFFICE ON THIS DATE.
6) THE PROPERTY PLATTED HEREON IS SUBJECT TO ALL EASEMENTS AND RESTRICTIONS OF RECORD.
7) DEED REFERENCE: D.B. 681, PG. 109 & D.B. 1196, PG. 1056.
8) SUBSURFACE AND ENVIRONMENTAL CONDITIONS WERE NOT EXAMINED ON THIS DATE. THE SURVEYOR MADE A DILIGENT ATTEMPT TO LOCATE UNDERGROUND UTILITIES WHERE OBVIOUS, VISIBLE MARKS HAVE BEEN ESTABLISHED. SURVEYOR MAKES NO STATEMENT TO THE ACCURACY OF SAID MARKINGS AND THEIR SUBSEQUENT LOCATIONS SHOWN HEREON.
9) CURRENT OWNER: BAYSHORE ESTATES, INC., A NORTH CAROLINA CORPORATION.
10) WETLANDS SHOWN HEREON COMPILED FROM REFERENCE MAP NO. 13.
11) FIRST AMERICAN TITLE INSURANCE COMPANY
POLICY FILE NUMBER: NCS-451497-ATL
EFFECTIVE DATE: AUGUST 27, 2010; 10:57 AM. REVISED OCTOBER 25, 2010; 10:22 AM EDT.

SCHEDULE B - SECTION II EXCEPTIONS:

THE SURVEYOR OFFERS THE FOLLOWING OPINIONS BASED ON EVEIDENCE OF RECORDED INSTRUMENTS, FIELD OBSERVATIONS, AND PAROL EVIDENCE FROM MUNICIPALITIES AND UTILITY COMPANIES:

3. RIGHT(S) OF WAY TO BELLSOUTH RECORDED IN BOOK 2128, PAGE 313, NEW HANOVER REGISTRY DOES AFFECT SAID PREMISES AS SHOWN HEREON.

4. EASEMENTS TO CAROLINA POWER & LIGHT COMPANY
   a. BOOK 862, PAGE 286, NEW HANOVER COUNTY REGISTRY, DOES AFFECT SAID PREMISES. EASEMENT IS BLANKET IN NATURE, NO WIDTH PROVIDED. LOCATION SHOWN HEREON INDICATE AREAS SURVEYOR CAN IDENTIFY BY PROVIDED INSTRUMENT. SURVEYOR CANNOT DETERMINE ENTIRE LOCATION OF EASEMENT FROM PROVIDED INSTRUMENT.
   b. BOOK 639, PAGE 27 AND BOOK 672, PAGE 337, NEW HANOVER COUNTY REGISTRY, MAY AFFECT SAID PREMISES. LOCATION OF EASEMENT CANNOT BE ACCURATELY LOCATED FROM PROVIDED INSTRUMENT.
   c. BOOK 560, PAGE 537, NEW HANOVER COUNTY REGISTRY, MAY AFFECT SAID PREMISES. LOCATION OF EASEMENT CANNOT BE ACCURATELY LOCATED FROM PROVIDED INSTRUMENT.
   ci. BOOK 560, PAGE 567, NEW HANOVER COUNTY REGISTRY, DOES AFFECT SAID PREMISES. EASEMENT IS BLANKET IN NATURE, NO WIDTH PROVIDED. APPROXIMATE LOCATION SHOWN HEREON.
   d. BOOK 278, PAGE 138, NEW HANOVER COUNTY REGISTRY, DOES AFFECT SAID PREMISES AS SHOWN HEREON.
   e. BOOK 672, PAGE 337, NEW HANOVER COUNTY REGISTRY, MAY AFFECT SAID PREMISES. EASEMENT CANNOT BE ACCURATELY LOCATED FROM PROVIDED INSTRUMENT.
   f. BOOK 482, PAGE 435, NEW HANOVER COUNTY REGISTRY, MAY AFFECT SAID PREMISES. LOCATION OF EASEMENT CANNOT BE ACCURATELY LOCATED FROM PROVIDED INSTRUMENT.

5. RIGHT OF WAY FOR ACCESS, INGRESS AND EGRESS OVER AN OLD DIRT IN FAVOR OF DORIS RIGGS SMITH CONTAINED IN DEED RECORDED IN BOOK 2532, PAGE 429, NEW HANOVER COUNTY REGISTRY DOES AFFECT SAID PREMISES (UNDEFINED WIDTH) AS APPROXIMATELY SHOWN HEREON.

6. RIGHT OF WAY FOR ACCESS, INGRESS AND EGRESS OVER AN OLD DIRT IN FAVOR OF BOBBY HOLT RECORDED IN BOOK 1612, PAGE 194, NEW HANOVER COUNTY REGISTRY IS SUBJECT TO SUITABLE SUBSTITUTION BY PURCHASER AND DOES AFFECT SAID PREMISES AS SHOWN HEREON.

8. RIGHTS OF OTHERS IN AND TO THE CONTINUOUS AND UNINTERRUPTED FLOW TO SPRINGS, BRANCHES, CREEKS, DITCHES AND CANALS THAT CROSS THE LAND, INCLUDING SPRING BRANCH, MARSHY BRANCH AND MIDDLE BRANCH MAY AFFECT SAID PREMISES. NO INSTRUMENT PROVIDED TO SURVEYOR INDICATING OTHER'S RIGHTS OF USE.

9. DRAINAGE EASEMENTS AS SHOWN ON MAPS RECORDED IN MAP BOOK 38, PAGES 100 AND 178, NEW HANOVER COUNTY REGISTRY DOES AFFECT SAID PREMISES AS SHOWN HEREON.

11. 30' DRAINAGE EASMENT TO THE DEPARTMENT OF TRANSPORTATION RECORDED IN BOOK 1649, PAGE 128, NEW HANOVER COUNTY REGISTRY DOES AFFECT SAID PREMISES AS SHOWN HEREON.

12. RIGHTS OF PARTIES IN POSSESION AS TENNANTS ONLY UNDER UNRECORDED LEASE(S) OR RENTAL AGREEMENTS MAY AFFECT SAID PREMISES. NO INSTRUMENT PROVIDED.

14. ACCESS EASEMENT RECORDED IN MAP BOOK 37, PAGE 101, NEW HANOVER COUNTY REGISTRY DOES AFFECT SAID PREMISES AS SHOWN ON HEREON.

15. 30' DRAINAGE EASEMENT RECORDED IN BOOK 3660, PAGE 27, NEW HANOVER COUNTY REGISTRY DOES AFFECT SAID PREMISES AS SHOWN HEREON.

16. 20' UTILITY EASEMENT TO NEW HANOVER COUNTY WATER & SEWER DISTRICT RECORDED IN BOOK 2304, PAGE 351, NEW HANOVER COUNTY REGISTRY DOES AFFECT SAID PREMISES AS SHOWN HEREON.

THIS INSTRUMENT AND REPRODUCIBLE COPIES OF THIS INSTRUMENT ARE OWNED BY COX SURVEYORS & ASSOCIATES, PLLC. REPRODUCTIONS OF THIS INSTRUMENT ARE NOT PERMITTED WITHOUT WRITTEN CONSENT OF COX SURVEYORS & ASSOCIATES, PLLC UNLESS OBTAINED THROUGH MATTERS OF PUBLIC RECORD.
ALTERATIONS TO THIS DOCUMENT ARE NOT PERMITTED.

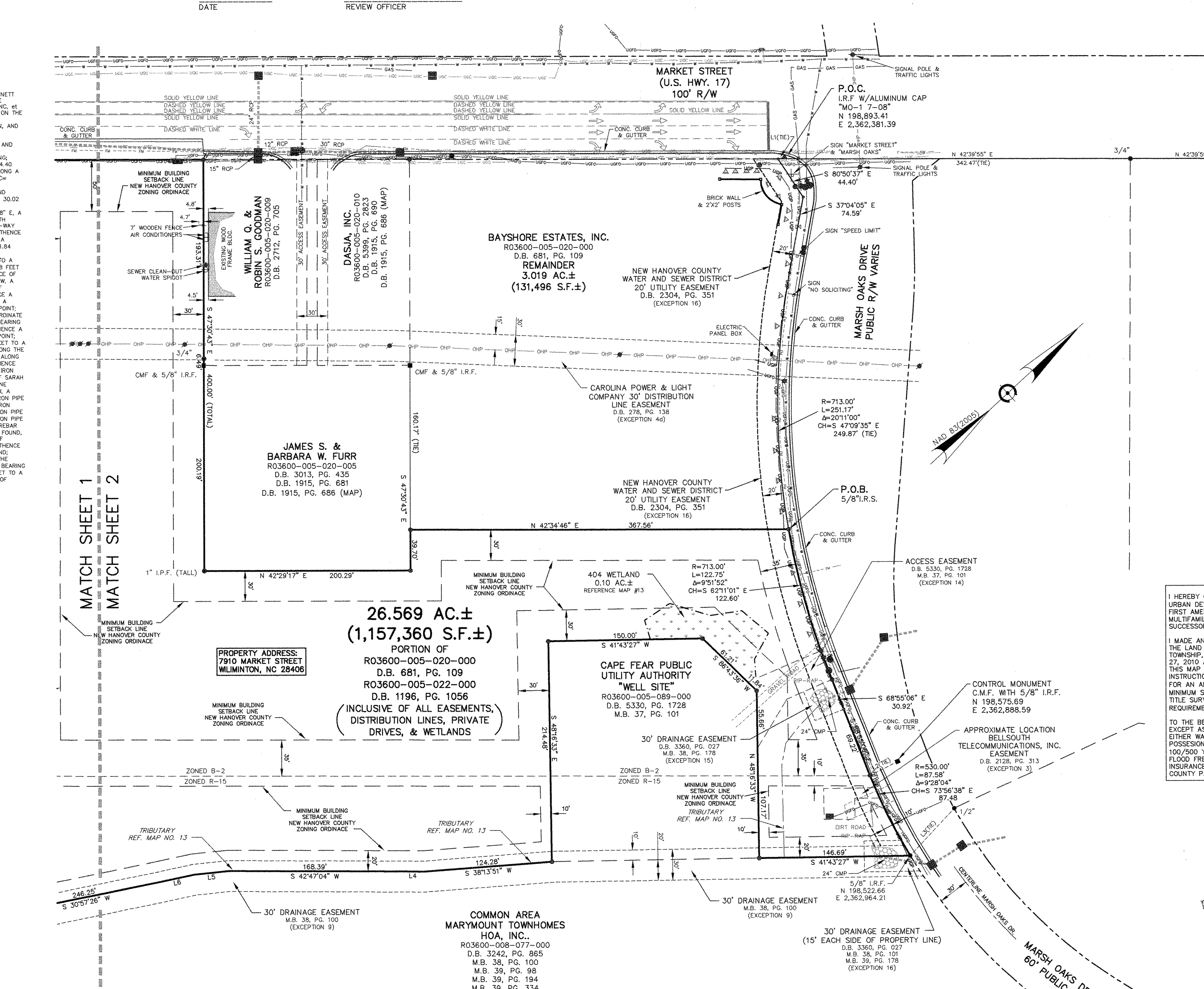

HUD CERTIFICATION

I HEREBY CERTIFY TO THE U.S. DEPARTMENT OF HOUSING AND URBAN DEVELOPMENT (HUD), FLOURNOY DEVELOPMENT COMPANY, FIRST AMERICAN TITLE INSURANCE COMPANY, OPPENHEIMER MULTIFAMILY HOUSING & HEALTHCARE FINANCE, INC., AND TO THEIR SUCCESSORS AND ASSIGNS, THAT:

I MADE AN ON THE GROUND SURVEY PER RECORD DESCRIPTION OF THE LAND SHOWN HEREON LOCATED IN WILMINGTON, HARNETT TOWNSHIP, NEW HANOVER COUNTY, NORTH CAROLINA, ON OCTOBER 27, 2010 AND UPDATED DECEMBER 29, 2011; AND THAT IT AND THIS MAP WAS MADE IN ACCORDANCE WITH THE HUD SURVEY INSTRUCTIONS AND REPORT, HUD-92457M, AND THE REQUIREMENTS FOR AN ALTA/ACSM LAND TITLE SURVEY, AS DEFINED IN THE MINIMUM STANDARD DETAIL REQUIREMENTS FOR ALTA/ACSM LAND TITLE SURVEYS DATED 2011 MINIMUM STANDARD DETAIL REQUIREMENTS FOR ALTA/ACSM LAND TITLE SURVEYS.

TO THE BEST OF MY KNOWLEDGE, BELIEF AND INFORMATION, EXCEPT AS SHOWN HEREON: THERE ARE NO ENCROACHMENTS EITHER WAY ACROSS PROPERTY LINES AND LINES OF ACTUAL POSSESION ARE THE SAME; AND THE PREMISES ARE FREE OF ANY 100/500 YEAR RETURN FREQUENCY FLOOD HAZARD, AND SUCH FLOOD FREE CONDITION IS SHOWN ON THE FEDERAL FLOOD INSURANCE RATE MAP 3720316900J COMMUNITY OF NEW HANOVER COUNTY PANEL NO. 3169 J.

RECEIVED
DEC 11 2012
PLANNING DIVISION

LEGEND

■	CONCRETE MONUMENT
●	CABLE BOX
•	COMPUTED BOUNDARY POINT
▲	CONTROL POINT
▬	CHECK VALVE
I.R.F.	IRON REBAR FOUND
I.R.S.	IRON REBAR SET
I.P.F.	IRON PIPE FOUND
C.M.F.	CONCRETE MONUMENT FOUND
CONC.	CONCRETE
R.C.P.	REINFORCED CONCRETE PIPE
D.B.	DEED BOOK
▷	FLOOD LAMP
▬	ELECTRIC BOX
━	ELECTRIC METER
⋈	GAS VALVE
H&T	HUB & TACK
⊕	FIRE HYDRANT
⟵	GUY WIRE
●	IRRIGATION CONTROL VALVE
●	IRON PIPE FOUND
●	5/8" IRON REBAR SET
●	IRON REBAR FOUND
✱	LIGHT POLE
M.B.	MAP BOOK
PG.	PAGE
R/W	RIGHT-OF-WAY
●	SANITARY MANHOLE
●	SEWER CLEAN OUT
—o—	SIGN
■	TELEPHONE BOX
⊖	UNDERGROUND FIBER-OPTIC MARKER
-OHP-	OVERHEAD ELECTRIC LINE
-UGP-	UNDERGROUND ELECTRIC LINE
-UGC-	UNDERGROUND COMMUNICATION LINE
-UGFO-	UNDERGROUND FIBER-OPTIC LINE
-GAS-	UNDERGROUND GAS LINE
-SS-	UNDERGROUND SANITARY SEWER LINE
-W-	UNDERGROUND WATER LINE
-X-	4' CHAIN-LINK FENCE
■	WATER METER
●	WATER VALVE
▲	WATER VALVE MARKER
———	BOUNDARY LINE
— — —	RIGHT-OF-WAY LINE
—— ——	ADJACENT PROPERTY LINE
- - - - -	TIE LINE
≈≈≈≈	DRAINAGE LINE

CERTIFICATE OF OWNERSHIP, DEDICATION AND JURISDICTION

I (WE) HEREBY CERTIFY THAT I AM (WE ARE) THE OWNER(S) OF THE PROPERTY SHOWN AND DESCRIBED HEREON AND THAT I (WE) ADOPT THIS PLAN OF SUBDIVISION WITH MY (OUR) FREE CONSENT AND DEDICATE ALL STREETS, ALLEYS, WALKS, PARKS, CONSERVATION SPACE AND OTHER AREAS TO PUBLIC OR PRIVATE USE AS NOTED. ALL ROADS AND DRAINAGE EASEMENTS ARE DEDICATED FOR PUBLIC UTILITY PURPOSES. FURTHER, I (WE) CERTIFY THE LAND AS SHOWN HEREON IS LOCATED WITHIN THE SUBDIVISION JURISDICTION OF NEW HANOVER COUNTY

DATE SIGNATURE OF OWNER(S)

DATE SUBORDINATION CONSENT OF MORTGAGEE

CERTIFICATE OF DISCLOSURE FOR PRIVATE DEVELOPMENTS

I (WE) ACKNOWLEDGE THAT NEITHER THE STATE NOR THE COUNTY SHALL BE RESPONSIBLE FOR MAINTENANCE OF ANY STREETS, PARKS, DRAINAGE, OPEN SPACE OR OTHER AREAS WHICH ARE DESIGNATED FOR PRIVATE USE. I (WE) ACKNOWLEDGE THAT PRIOR TO CONTRACTING WITH A PROSPECTIVE BUYER, I SHALL GIVE THE BUYER A WRITTEN STATEMENT WHICH DISCLOSES THE EXISTENCE AND LOCATION OF SUCH PRIVATE AREAS AND SPECIFIES THE MAINTENANCE RESPONSIBILITIES FOR SAME. WHEN APPLICABLE, THE STATEMENT SHALL DISCLOSE THAT THE STREET(S) WILL NOT BE CONSTRUCTED TO MINIMUM STANDARDS SUFFICIENT TO ALLOW THEIR INCLUSION ON THE STATE HIGHWAY SYSTEM FOR MAINTENANCE.

DATE

SIGNATURE OF OWNER(S)

REFERENCE MAPS:
1)"PLAT OF BAYSHORE SECTION 15 HARNET TOWNSHIP, NEW HANOVER COUNTY, NORTH CAROLINA" DATED NOV. 1, 1995, BY HANOVER DESIGN SERVICES, P.A. AND RECORDED AT M.B. 35, PG. 183, NEW HANOVER COUNTY R.O.D. OFFICE.
2)"REVISION PLAT FOR MARSH OAKS SECTION ONE HARNETT TOWNSHIP, NEW HANOVER CO., NORTH CAROLINA" DATED OCT., 1999, BY HANOVER DESIGN SERVICES, P.A AND RECORDED AT M.B. 39, PG. 178, NEW HANOVER COUNTY R.O.D. OFFICE.
3)"SURVEY PORTION OF FORMERLY S.E. KOONCE TRACT HARNETT TOWNSHIP, NEW HANOVER CO., N.C." FOR HENRY W. JOHNSON DATED JULY 20, 1995; REVISED AUG. 4, 1995, BY M.F. UNDERWOOD R.L.S. AND RECORDED AT D.B. 1915, PG. 686, NEW HANOVER COUNTY R.O.D. OFFICE.
4)"MAP OF SURVEY FOR ESTHER F. LEE TRACT A & B" DATED MAY 6, 2009, BY IGNELL W. HOOD III P.L.S. AND RECORDED AT M.B. 54, PG. 79, NEW HANOVER COUNTY R.O.D. OFFICE.
5)"PLAT OF MARSH OAKS (CLUBHOUSE SITE) HARNET TOWNSHIP, NEW HANOVER CO. NORTH CAROLINA" DATED SEPT., 1999, BY HANOVER DESIGN SERVICES, P.A. AND RECORDED AT M.B. 39, PG. 158, NEW HANOVER COUNTY R.O.D. OFFICE.
6)"MAP OF SURVEY FOR MARYMOUNT DEVELOPERS, INC. MARSH OAKS-TRACT "A" HARNET TOWNSHIP, NEW HANOVER COUNTY, NORTH CAROLINA" DATED JULY 24, 1998; REVISED AUG. 20, 1998, BY SHERWIN D. CRIBB P.L.S. AND RECORDED AT M.B. 38, PG. 100, NEW HANOVER COUNTY R.O.D. OFFICE.
7)"PHASE 3 MARYMOUNT AT MARSH OAKS A TOWNHOUSE PERFORMANCE DEVELOPMENT" DATED JUNE, 1999, BY SHERWIN D. CRIBB P.L.S. AND RECORDED AT M.B. 39, PG. 98, NEW HANOVER COUNTY R.O.D. OFFICE.
8)"PHASE 5 MARYMOUNT AT MARSH OAKS (A TOWNHOUSE DEVELOPMENT)" DATED OCT. 28, 1999, BY BY SHERWIN D. CRIBB P.L.S AND RECORDED AT M.B. 39, PG. 194, NEW HANOVER COUNTY R.O.D. OFFICE.
9)"PHASE 8 MARYMOUNT AT MARSH OAKS (A TOWNHOUSE DEVELOPMENT)" DATED FEB. 11, 2000, BY BY SHERWIN D. CRIBB P.L.S. AND RECORDED AT M.B. 39, PG. 307, NEW HANOVER COUNTY R.O.D. OFFICE.
10)"PHASE 10 MARYMOUNT AT MARSH OAKS (A PERFORMANCE DEVELOPMENT) DATED APRIL 7, 2000, BY SHERWIN D. CRIBB P.L.S AND RECORDED AT M.B. 39, PG. 334, NEW HANOVER COUNTY R.O.D. OFFICE.
11)"PHASE 11 MARYMOUNT AT MEASH OAKS (A PERFORMANCE DEVELOPMENT) DATED MAY 9, 2000, BY SHERWIN D. CRIBB P.L.S AND RECORDED AT M.B. 39, PG. 363, NEW HANOVER COUNTY R.O.D. OFFICE.
12)"PHASE 14 MARYMOUNT AT MEASH OAKS (A PERFORMANCE DEVELOPMENT) DATED OCT. 19, 2000, BY SHERWIN D. CRIBB P.L.S AND RECORDED AT M.B. 40, PG. 307, NEW HANOVER COUNTY R.O.D. OFFICE.
13)"404 WETLAND MAP OF MARSH OAKS COMMERCIAL AREA FOR BAYSHORE ESTATES, INC." DATED JULY, 2005; REVISED AUG., 2010, BY HANOVER DESIGNS SERVICES, P.A.

LINE	BEARING	LENGTH
L1	N 27°43'47" E	6.49
L2	N 16°19'51" E	30.04
L3	N 04°32'59" W	63.00
L4	S 42°47'04" W	22.05
L5	S 36°42'45" W	33.50
L6	S 30°21'37" W	35.26
L7	S 21°57'54" W	16.55
L8	S 00°52'51" W	42.97
L9A	S 04°16'43" E	19.95
L9B	S 04°16'43" E	21.16
L10	S 06°05'56" W	34.50
L11	S 31°33'26" W	41.71
L12	S 58°02'59" E	57.91
L13	S 55°25'42" E	31.23
L14	S 57°34'03" E	54.43
L15	S 65°12'40" E	29.06
L16	S 75°35'10" E	33.12
L17	S 72°31'01" E	64.30
L18	S 65°15'19" E	43.59
L19	S 46°47'34" W	21.34

SHEET 2 OF 2
ALTA/ACSM LAND TITLE SURVEY OF
AMBERLEIGH SHORES
26.569 ACRES±
(1,157,360 S.F.±)
THE LANDS OF BAYSHORE ESTATES, INC.
PREPARED FOR:
FIRST AMERICAN TITLE INSURANCE COMPANY & FLOURNOY DEVELOPMENT COMPANY
HARNETT TOWNSHIP
NEW HANOVER COUNTY NORTH CAROLINA

60 0 30 60 120
SCALE: 1 INCH = 60 FEET

SURVEYED & MAPPED BY
COX SURVEYORS & ASSOCIATES, PLLC
4761 HWY. 501 WEST, SUITE 2
MYRTLE BEACH, SC 29579 (843) 236-7200
coxsurveyors @ sccoast.net

DRAWN BY JJC FIELD DATE SEPT/2010 & DEC 2011
REVIEWED JJC PLAT DATE 10/27/2010
CREW CHIEF CTB LAST REVISED 12/29/2011

O:\Drawings-CSA\00100\00158 Amber\00158 ALTA(26-122811).dwg: 12/29/2011 1:48 PM

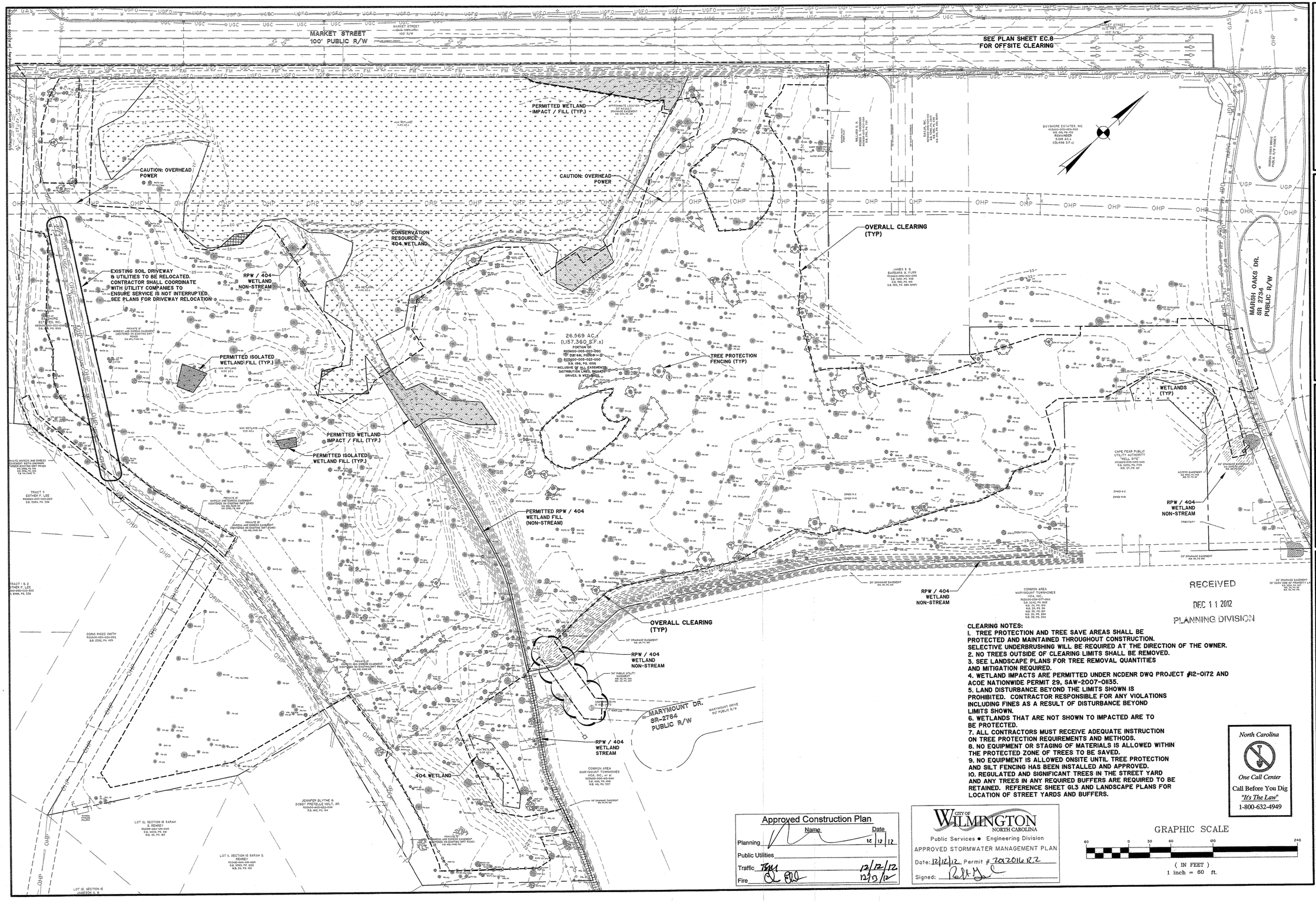

RECEIVED

DEC 11 2012

PLANNING DIVISION

CLEARING NOTES:

1. TREE PROTECTION AND TREE SAVE AREAS SHALL BE PROTECTED AND MAINTAINED THROUGHOUT CONSTRUCTION. SELECTIVE UNDERBRUSHING WILL BE REQUIRED AT THE DIRECTION OF THE OWNER.
2. NO TREES OUTSIDE OF CLEARING LIMITS SHALL BE REMOVED.
3. SEE LANDSCAPE PLANS FOR TREE REMOVAL QUANTITIES AND MITIGATION REQUIRED.
4. WETLAND IMPACTS ARE PERMITTED UNDER NCDENR DWQ PROJECT #12-0172 AND ACOE NATIONWIDE PERMIT 29, SAW-2007-0135.
5. LAND DISTURBANCE BEYOND THE LIMITS SHOWN IS PROHIBITED. CONTRACTOR RESPONSIBLE FOR ANY VIOLATIONS INCLUDING FINES AS A RESULT OF DISTURBANCE BEYOND LIMITS SHOWN.
6. WETLANDS THAT ARE NOT SHOWN TO IMPACTED ARE TO BE PROTECTED.
7. ALL CONTRACTORS MUST RECEIVE ADEQUATE INSTRUCTION ON TREE PROTECTION REQUIREMENTS AND METHODS.
8. NO EQUIPMENT OR STAGING OF MATERIALS IS ALLOWED WITHIN THE PROTECTED ZONE OF TREES TO BE SAVED.
9. NO EQUIPMENT IS ALLOWED ONSITE UNTIL TREE PROTECTION AND SILT FENCING HAS BEEN INSTALLED AND APPROVED.
10. REGULATED AND SIGNIFICANT TREES IN THE STREET YARD AND ANY TREES IN ANY REQUIRED BUFFERS ARE REQUIRED TO BE RETAINED. REFERENCE SHEET G1.3 AND LANDSCAPE PLANS FOR LOCATION OF STREET YARDS AND BUFFERS.

North Carolina
One Call Center
Call Before You Dig
"It's The Law"
1-800-632-4949

GRAPHIC SCALE

60 0 30 60 120 240

(IN FEET)
1 inch = 60 ft.

Approved Construction Plan

	Name	Date
Planning		12/12/12
Public Utilities		
Traffic	TM	12/12/12
Fire		12/13/12

CITY OF WILMINGTON NORTH CAROLINA
Public Services • Engineering Division
APPROVED STORMWATER MANAGEMENT PLAN
Date: 12/12/12 Permit # 20120116R2
Signed:

NORTH CAROLINA PROFESSIONAL ENGINEER SEAL
THOMAS ENGINEERING P.C. No. F-0871
CERTIFICATE OF AUTHORIZATION
NOLL VINCENT THOMAS
12/05/12
JAMES D. HUTTON, III
SEAL 022363

NO.	BY	DATE
14	BDR	12/05/12
13	BDR	09/25/12
12	BDR	08/27/12
10	BDR	07/24/12
9	BDR	07/20/12
6	BDR	05/16/12
4	BDR	04/23/12
1	BDR	01/25/12

REVISIONS

14 REVISE CLEARING LIMITS
13 UPDATE CLEARING LIMITS ON NE CORNER OF SITE
12 ADD PREVIOUS REVISION NOTES
10 SEE REVISION SUMMARY ON SHEET G1.0
9 REVISE CLEARING LIMITS FOR EMERGENCY ACCESS ROAD
6 UPDATE CLEARING/DISTURBANCE LIMITS
4 SEE REVISION SUMMARY ON SHEET G1.0
1 SEE REVISION SUMMARY ON SHEET G1.0

THOMAS & HUTTON
Engineering | Surveying | Planning | GIS | Consulting
215 South Kerr Avenue • Unit B
Wilmington, NC 28403 • 910.332.3360
www.thomasandhutton.com
Savannah, GA | Brunswick, GA | Charleston, SC | Myrtle Beach, SC

FLOURNOY DEVELOPMENT COMPANY
NEW HANOVER COUNTY, NC

AMBERLEIGH SHORES

CLEARING PLAN

JOB NO:	J-22667
DATE:	11/15/11
DRAWN:	BDR
DESIGNED:	BDR
REVIEWED:	JDR
APPROVED:	JDR
SCALE:	1" = 60'

G1.2

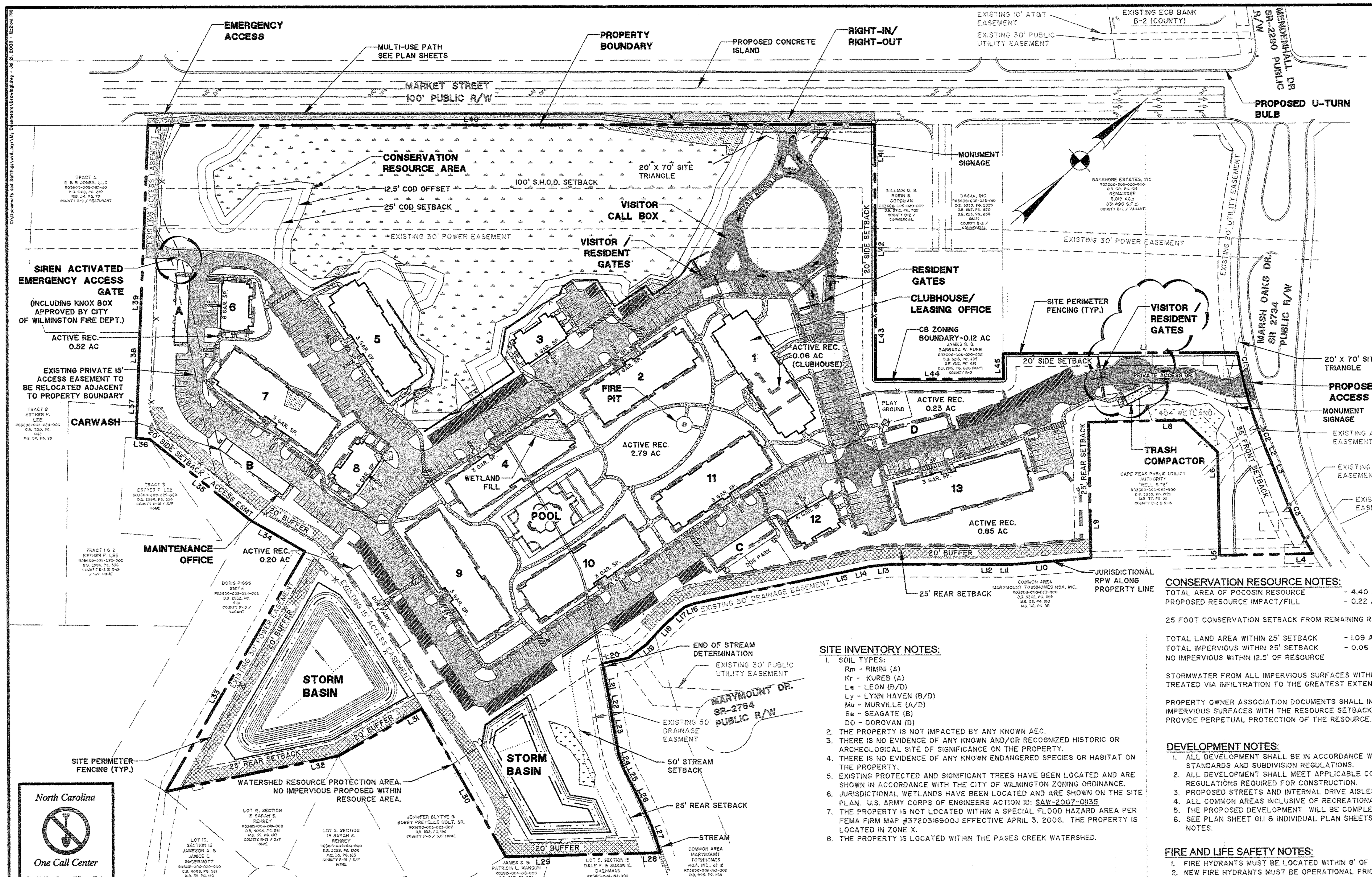

North Carolina
One Call Center
Call Before You Dig
"It's The Law"
1-800-632-4949

LEGEND:

- WETLANDS TO BE FILLED (PENDING A.C.O.E. PERMIT)
- WETLANDS TO REMAIN PRESERVED
- POCOSIN CONSERVATION RESOURCE TO REMAIN PRESERVED
- PROPOSED LANDSCAPE BUFFER
- STREAM
- PERVIOUS PAVEMENT (MATERIAL TO BE DETERMINED)
- OPEN SPACE BOUNDARIES
- STREAM STBACK

DEVELOPER:

FLOURNOY DEVELOPMENT CO.
900 BROOKSTONE CENTRE PKWY.
COLUMBUS, GEORGIA 31904
CONTACT: RYAN FOSTER
(706) 324-4000

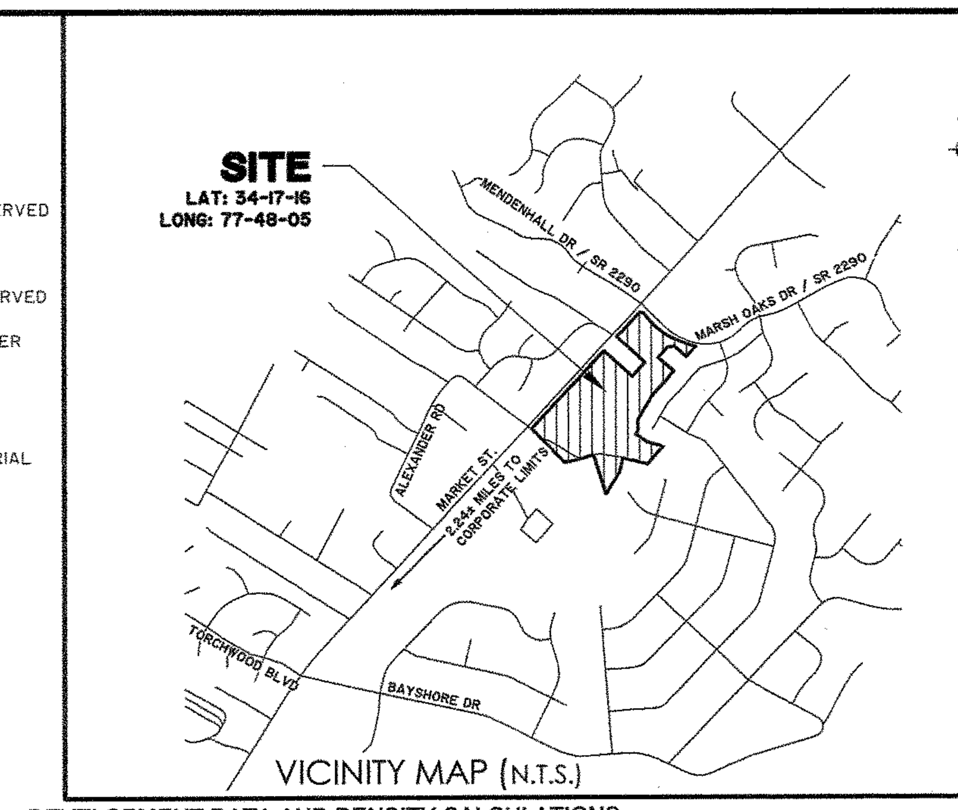

VICINITY MAP (N.T.S.)

CURVE TABLE

CURVE	RADIUS	LENGTH	CHORD	CHD BEARING	DELTA
C1	713.00'	122.75'	122.60'	S 62°41'01" E	9°51'52"
C2	713.00'	30.02'	30.02'	S 68°19'19" E	2°24'45"
C3	530.00'	87.58'	87.48'	S 73°56'38" E	9°28'04"

LINE TABLE

LINE	BEARING	DISTANCE	LINE	BEARING	DISTANCE	LINE	BEARING	DISTANCE
L1	N 42°34'46" E	367.56'	L21	S 58°02'59" E	57.91'	L41	S 47°30'43" E	193.31'
L2	S 68°55'06" E	30.92'	L22	S 55°25'42" E	31.23'	L42	S 47°30'43" E	6.49'
L3	S 68°55'06" E	69.22'	L23	S 57°34'03" E	54.43'	L43	S 47°30'43" E	200.19'
L4	S 41°43'27" W	146.69'	L24	S 65°12'40" E	29.06'	L44	N 42°29'17" E	200.29'
L5	N 48°16'33" W	107.17'	L25	S 75°35'10" E	33.12'	L45	S 47°30'43" E	39.70'
L6	N 48°16'33" W	55.66'	L26	S 72°31'01" E	64.30'			
L7	S 86°43'36" W	73.05'	L27	S 65°15'19" E	43.59'			
L8	S 41°43'27" W	150.00'	L28	N 41°19'37" E	173.06'			
L9	S 48°16'33" E	214.48'	L29	N 41°19'37" E	70.08'			
L10	S 38°13'51" W	124.28'	L30	S 76°51'54" E	267.15'			
L11	S 42°47'04" W	22.05'	L31	N 13°07'41" E	150.07'			
L12	S 42°47'04" W	168.39'	L32	N 31°02'09" E	276.68'			
L13	S 36°42'45" W	33.50'	L33	S 17°03'40" E	435.27'			
L14	S 30°21'37" W	35.26'	L34	N 72°44'23" E	100.70'			
L15	S 30°57'26" W	246.25'	L35	N 81°45'49" E	201.01'			
L16	S 21°57'54" W	16.55'	L36	N 46°47'34" E	21.34'			
L17	S 0°52'51" W	42.97'	L37	S 45°12'18" E	50.03'			
L18	S 4°16'43" E	41.11'	L38	S 45°12'18" E	115.65'			
L19	S 6°05'56" W	34.50'	L39	N 45°03'39" W	325.14'			
L20	S 31°33'26" W	41.71'	L40	N 42°34'40" E	1140.66'			

BUILDING SCEDULE

BUILDING NUMBER	BUILDING TYPE	# OF STORIES	MAX. HEIGHT	GROSS SF PER FLOOR	TOTAL GROSS SF	1 BEDROOM UNITS	2 BEDROOM UNITS	3 BEDROOM UNITS	TOTAL UNITS
1	II-A	3	39'-2"	12,736.33	38,209.00	10	13	3	26
2	III-A	3	37'-2"	11,115.33	33,346.00	9	20	0	29
3	IV	2	25'-0"	3,849.00	7,698.00	6	0	0	6
4	II-B	3	37'-2"	12,736.33	38,209.00	9	14	6	29
5	III	3	37'-2"	11,115.33	33,346.00	9	20	0	29
6	IV	2	25'-0"	3,849.00	7,698.00	6	0	0	6
7	II	3	37'-2"	12,736.33	38,209.00	9	14	6	29
8	IV	2	25'-0"	3,849.00	7,698.00	6	0	0	6
9	I	3	37'-2"	13,220.33	39,661.00	9	8	12	29
10	II	3	37'-2"	12,736.33	38,209.00	9	14	6	29
11	III	3	37'-2"	11,115.33	33,346.00	9	20	0	29
12	IV	2	25'-0"	3,849.00	7,698.00	6	0	0	6
13	I-A	3	37'-2"	13,220.33	39,661.00	9	8	12	29
GARAGE A	-	1	11'-9"	2124.40	2,124.40	-	-	-	-
GARAGE B	-	1	11'-9"	2556.60	2,556.60	-	-	-	-
GARAGE C	-	1	11'-9"	2238.40	2,238.40	-	-	-	-
GARAGE D	-	1	11'-9"	2124.40	2,124.40	-	-	-	-
POOL PAVILION	-	1	13'-11"	1272.30	1,272.30	-	-	-	-
TOTALS	-	-	-	136,444.0700	373,204.10	106	131	45	282

SITE INVENTORY NOTES:

1. SOIL TYPES:
   - Rm - RIMINI (A)
   - Kr - KUREB (A)
   - Le - LEON (B/D)
   - Ly - LYNN HAVEN (B/D)
   - Mu - MURVILLE (A/D)
   - Se - SEAGATE (B)
   - DO - DOROVAN (D)
2. THE PROPERTY IS NOT IMPACTED BY ANY KNOWN AEC.
3. THERE IS NO EVIDENCE OF ANY KNOWN AND/OR RECOGNIZED HISTORIC OR ARCHEOLOGICAL SITE OF SIGNIFICANCE ON THE PROPERTY.
4. THERE IS NO EVIDENCE OF ANY KNOWN ENDANGERED SPECIES OR HABITAT ON THE PROPERTY.
5. EXISTING PROTECTED AND SIGNIFICANT TREES HAVE BEEN LOCATED AND ARE SHOWN IN ACCORDANCE WITH THE CITY OF WILMINGTON ZONING ORDINANCE.
6. JURISDICTIONAL WETLANDS HAVE BEEN LOCATED AND ARE SHOWN ON THE SITE PLAN. U.S. ARMY CORPS OF ENGINEERS ACTION ID: SAW-2007-01135
7. THE PROPERTY IS NOT LOCATED WITHIN A SPECIAL FLOOD HAZARD AREA PER FEMA FIRM MAP #3720316900J EFFECTIVE APRIL 3, 2006. THE PROPERTY IS LOCATED IN ZONE X.
8. THE PROPERTY IS LOCATED WITHIN THE PAGES CREEK WATERSHED.

CONSERVATION RESOURCE NOTES:

TOTAL AREA OF POCOSIN RESOURCE - 4.40 AC
PROPOSED RESOURCE IMPACT/FILL - 0.22 AC

25 FOOT CONSERVATION SETBACK FROM REMAINING RESOURCE FOR RESIDENTIAL

TOTAL LAND AREA WITHIN 25' SETBACK - 1.09 AC
TOTAL IMPERVIOUS WITHIN 25' SETBACK - 0.06 (LESS THAN 25% OF SETBACK AREA, OK)
NO IMPERVIOUS WITHIN 12.5' OF RESOURCE

STORMWATER FROM ALL IMPERVIOUS SURFACES WITHIN CONSERVATION SETBACK SHALL BE TREATED VIA INFILTRATION TO THE GREATEST EXTENT PRACTICAL.

PROPERTY OWNER ASSOCIATION DOCUMENTS SHALL INCLUDE PROVISIONS TO PROHIBIT ADDITIONAL IMPERVIOUS SURFACES WITH THE RESOURCE SETBACK OTHER THAN SHOWN ON THIS PLAN AND PROVIDE PERPETUAL PROTECTION OF THE RESOURCE.

DEVELOPMENT NOTES:

1. ALL DEVELOPMENT SHALL BE IN ACCORDANCE WITH CITY OF WILMINGTON TECHNICAL STANDARDS AND SUBDIVISION REGULATIONS.
2. ALL DEVELOPMENT SHALL MEET APPLICABLE COUNTY, STATE, AND/OR FEDERAL REGULATIONS REQUIRED FOR CONSTRUCTION.
3. PROPOSED STREETS AND INTERNAL DRIVE AISLES TO BE PRIVATELY MAINTAINED.
4. ALL COMMON AREAS INCLUSIVE OF RECREATIONAL AREAS SHALL BE PRIVATELY MAINTAINED.
5. THE PROPOSED DEVELOPMENT WILL BE COMPLETED IN ONE PHASE.
6. SEE PLAN SHEET G1.1 & INDIVIDUAL PLAN SHEETS FOR ADDITIONAL CONSTRUCTION RELATED NOTES.

FIRE AND LIFE SAFETY NOTES:

1. FIRE HYDRANTS MUST BE LOCATED WITHIN 8' OF THE CURB.
2. NEW FIRE HYDRANTS MUST BE OPERATIONAL PRIOR TO CONSTRUCTION OF THE PROPOSED BUILDINGS ON THE SITE.
3. CONTRACTOR SHALL MAINTAIN AN ALL WEATHER ACCESS ROAD FOR EMERGENCY VEHICLES AT ALL TIMES DURING CONSTRUCTION.
4. TEMPORARY STREET SIGNS SHALL BE INSTALLED AT EACH INTERSECTION AT SUCH TIME CONSTRUCTION ALLOWS PASSAGE BY VEHICLES.
5. PROPOSED LANDSCAPING AND/OR PARKING SHALL NOT BLOCK OR IMPEDE THE FDC OF FIRE HYDRANTS. A 3 FOOT CLEAR SPACE SHALL BE MAINTAINED AROUND ALL FIRE HYDRANTS.
6. RESIDENTIAL BUILDINGS 1-13 WILL BE EQUIPPED WITH FIRE PROTECTION SPRINKLER SYSTEM AND FDC. BUILDINGS ARE TPYE V-A CONSTRUCTION.
7. FDC'S CAN BE NO FURTHER THAN 150' FROM A FIRE HYDRANT OR 40' FROM VEHICLE ACCESS.
8. PRIVATE FIRE LINES REQUIRE A SEPARATE PERMIT FROM WILMINGTON FIRE AND LIFE SAFETY DIVISION AT 910-343-0696.

UTILITY NOTES:

1. WATER AND SEWER SERVICE IS AVAILABLE TO THE SITE FROM CAPE FEAR PUBLIC AUTHORITY (CFPUA).
2. ALL UTILITY SERVICES SHALL BE INSTALLED UNDERGROUND INCLUDING ELECTRIC, TELECOMMUNICATION, & CATV.
3. PROJECT SHALL COMPLY WITH THE CFPUA CROSS CONNECTION CONTROL ORDINANCE.
4. ANY BACKFLOW PREVENTION DEVICES REQUIRED BY THE CFPUA WILL NEED TO BE ON THE LIST OF APPROVED DEVICES BY USCFCCHR AND THE ASSE.
5. CONTRACTOR SHALL APPLY TO THE CFPUA FOR WATER TO BE USED DURING CONSTRUCTION. CONTRACTOR SHALL BE RESPONSIBLE FOR INSTALLATION OF AN APPROVED RP BACKFLOW PREVENTION DEVICE ON THE CUSTOMERS SIDE OF THE METER.
6. WATER AND SEWER SERVICES, INCLUDING RELEASING OF WATER METERS, CANNOT BE PLACED INTO OPERATION UNTIL THE ENGINEER'S CERTIFICATION AND RECORD DRAWINGS ARE RECEIVED BY THE CFPUA AND THE "FINAL CERTIFICATION" IS ISSUED BY THE APPLICABLE DEPARTMENT OF THE NCDENR FOR BOTH WATER & SEWER.
7. ALL NEW WATER MAINS AND SERVICES SHALL BE INSTALLED WITH A CONTINUOUS 10 GAUGE INSULATED COPPER WIRE SECURELY TAPED TO THE TOP OF THE PIPE. SPLICING & ALL OTHER INSTALLATION PROCEDURES SHALL CONFIRM TO THE CFPUA SPECIFICATIONS, CURRENT EDITION.
8. THE CONTRACTOR IS RESPONSIBLE FOR THE LOCATION AND PROTECTION OF EXISTING UTILITIES DURING CONSTRUCTION. CONTACT THE NORTH CAROLINA ONE CALL CENTER AT 811.
9. CONTRACTOR IS RESPONSIBLE FOR THE REPAIR AND/OR REPLACEMENT OF ANY EXISTING PAVEMENT, CURB, UTILITIES, ETC DAMAGED DURING CONSTRUCTION ACTIVITIES. REPAIR AND/OR REPLACEMENT SHALL BE EQUAL OR BETTER QUALITY TO THE ORIGINAL ITEM.
10. PRIOR TO BEGINNING CONSTRUCTION, THE CONTRACTOR SHALL CONTACT THE APPLICABLE UTILITY COMPANIES FOR COORDINATION OF THE INSTALLATION OF ELECTRIC, CATV, TELECOMMUNICATIONS & GAS UTILITIES. FINAL GRADE MUST BE ESTABLISHED PRIOR TO UTILITIES BEING INSTALLED.
11. SOLID WASTE DISPOSAL SHALL BE COLLECTED IN A COMPACTOR.

Approved Construction Plan

	Name	Date
Planning	[signature]	12/12/12
Public Utilities		
Traffic	TSM	12/12/12
Fire	[signature]	12/13/12

CITY OF WILMINGTON NORTH CAROLINA
Public Services • Engineering Division
APPROVED STORMWATER MANAGEMENT PLAN
Date: 12/12/12 Permit # 2012016R2
Signed: [signature]

DEVELOPMENT DATA AND DENSITY CALCULATIONS:

NEW HANOVER COUNTY PARCEL #'S R3600-005-022-000 & PORTION OF R03600-005-020-000
CITY ZONING - MF-M AND CB
BUILDING SETBACKS:
FRONT - 35'
SIDE - 20'
REAR - 25'
(SETBACKS ARE BASED ON 35' BUILDING HEIGHT. BUILDING LOCATIONS FAR EXCEED THE ADDITIONAL 4' REQUIRED FOR UP TO 45' BUILDING HEIGHT.)

CAMA LAND USE CLASSIFICATION: URBAN TRANSITION & WATERSHED RESOURCE PROTECTION

SITE AREAS:
- MF-M ZONING - 26.45 AC
- CB ZONING - 0.12 AC

TOTAL SITE AREA: = 26.57 AC

MF-M DENSITY ALLOWANCE:
MF-M SITE AREA - 26.45 AC
MF-M DENSITY FACTOR x 17 UNITS/AC
TOTAL MF-M UNITS PERMITTED ON SITE = 449 UNITS
** 282 UNITS PROPOSED **
(SEE BUILDING SCHEDULE FOR UNIT BREAKDOWN)

MAXIMUM BUILDING HEIGHT = 39'-2" (BUILDING SETBACKS EXCEED REQUIRED MINIMUM. SEE PLAN)

PROPOSED BUILDINGS (SEE BUILDING SCHEDULE FOR MORE INFORMATION):
BUILDING #1 - 26 UNITS, CLUBHOUSE, OFFICE / 3-STORY
BUILDING #'S 2, 4, 5, 7, 9-11 & 13 - 29 UNITS, 3 BAY GARAGE / 3-STORY
BUILDING #'S 3, 6, 8 & 12 - 6 UNITS, 6 BAY GARAGE / 2-STORY
GARAGE BUILDINGS A & D - 8 GARAGES, 6 STORAGE UNITS / 1-STORY
GARAGE BUILDING C - 8 GARAGES (1 H/C), 6 STORAGE UNITS / 1-STORY
GARAGE BUILDING B - 8 GARAGES, MAINTENANCE OFFICE, CARWASH / 1-STORY

MAXIMUM BUILDING COVERAGE ALLOWED = 30% (345,648 S.F.)
PROPOSED BUILDING COVERAGE = 12.6% (145,107 S.F. - BUILDINGS 1-13, GARAGES A-D & PAVILION)

MINIMUM BUILDING SEPARATION = 16'

OPEN SPACE REQUIRED - (35% OF BASE SITE AREA)
BASE SITE AREA:
- GROSS SITE AREA - 26.45 AC
- LESS STORMWATER PONDS - 1.40 AC
- LESS STREAM/SURFACE WATER - 0.03 AC

TOTAL BASE SITE AREA - 25.02 AC

TOTAL REQUIRED = 25.07 AC x 35% = 8.76 AC (4.38 PASSIVE & 4.38 SHALL BE ACTIVE)

OPEN SPACE PROVIDED:
ACTIVE REC. AREA PROVIDED - 4.65 AC
PASSIVE REC. AREA PROVIDED - 6.41 AC
(BASE SITE AREA LESS ACTIVE REC., BUILDINGS, PARKING/ROADS, CONSERVATION RESOURCE, WETLANDS, BUFFERS & STREETYARDS)
TOTAL REC AREA PROVIDED - 11.06 AC

RECEIVED
DEC 11 2012
PLANNING DIVISION

TOTAL PARKING REQUIRED:
106 ONE-BEDROOM UNITS AT 1.5 SP./UNIT = 159
131 TWO-BEDROOM UNITS AT 2.0 SP./UNIT = 262
45 THREE-BEDROOM UNITS AT 2.25 SP./UNIT = 102
2759 SF CLUBHOUSE AT 1 SP./400SF = 7
3015 SF OFFICE AT 1 SP./300SF = 10
TOTAL REQUIRED = 540

TOTAL PARKING PROVIDED:
476 SURFACE SPACES (INC. 16 H/C) + 80 GARAGE SPACES (INC. 2 H/C) = 556

ACCESSIBLE PARKING REQUIRED:
2% OF THE TOTAL PARKING PROVIDED = 12
ONE AT EACH SITE AMENITY = 5 (POOL, PLAYGROUND, 2 DOGPARKS, TRASH)
ONE AT RENTAL OFFICE = 1
TOTAL ACCESSIBLE PARKING REQUIRED = 18 (1 PER EVERY 6 MUST BE VAN ACCESSIBLE)

ACCESSIBLE PARKING PROVIDED:
2 VAN ACCESSIBLE GARAGES (ONE IN BUILDING 13 & ONE IN GARAGE C)
12 VAN ACCESSIBLE SURFACE PARKING SPACES
4 ACCESSIBLE SURFACE PARKING SPACES
18 TOTAL PROVIDED

BICYCLE PARKING REQUIRED = 25
TOTAL OF 27 PROVIDED IN BREEZEWAY OF BUILDINGS. (3 BAY RACKS WILL BE IN BUILDINGS 2, 4, 5, 7, 10, 11, & 13 AND A 6 BAY RACK IN BUILDING 9.)

IMPERVIOUS SUMMARY:
ONSITE:
EXISTING SOIL DRIVEWAY TO REMAIN: 11,500 SF
NEW BUILDINGS (BLDGS 1-13, GARAGES A-D & PAVILION): 145,107 SF
NEW IMPERVIOUS PAVEMENT (INCLUDES TRASH COMPACTOR): 189,032 SF
NEW PERVIOUS PAVEMENT (0% CREDIT): 17,243 SF
NEW IMPERVIOUS SIDEWALKS (INCLUDES POOL DECK & FIRE PIT): 47,111 SF
IMPROVED EMERGENCY ACCESS: 4,180 SF
FUTURE 357SF
TOTAL ONSITE IMPERVIOUS: 414,530 SF (35.8% OF TOTAL TRACT AREA)
OFFSITE:
NEW IMPERVIOUS PAVEMENT (MARKET ST. TURN LANE & M. OAKS ENTRANCE): 8,100 SF
NEW IMPERVIOUS SIDEWALKS (PATH ALONG MARKET ST.): 9,000 SF
TOTAL NEW OFFSITE IMPERVIOUS: 17,100 SF

PROPOSED WATER & SEWER FLOWS:
0 GPD CURRENT USE
77,003 GPD PROPOSED

GRAPHIC SCALE
100 0 50 100 200 400
(IN FEET)
1 inch = 100 ft.

NORTH CAROLINA THOMAS & HUTTON ENGINEERING CO. No. F-0871 CERTIFICATE OF AUTHORIZATION

NORTH CAROLINA PROFESSIONAL ENGINEER SEAL 28179 JACK D. REEL 12/05/12

NO.	REVISIONS	BY	DATE
14	SEE REVISION SUMMARY ON SHEET G1.0	BDR	12/05/12
12	ADD PREVIOUS REVISION NOTES	BDR	08/27/12
11	SEE REVISION SUMMARY ON SHEET G1.0	BDR	08/07/12
10	SEE REVISION SUMMARY ON SHEET G1.0	BDR	07/24/12
9	REVISE EMERGENCY ACCESS DRIVEWAY LOCATION	BDR	07/20/12
6	UPDATE IMPERVIOUS IMFORMATION	BDR	05/18/12
5	REVISE BUILDING COVERAGE & IMPERVIOUS SUMMARY	BDR	04/23/12
4	SEE REVISION SUMMARY ON SHEET G1.0	BDR	04/23/12
1	SEE REVISION SUMMARY ON SHEET G1.0	BDR	01/25/12

THOMAS & HUTTON
Engineering | Surveying | Planning | GIS | Consulting
215 South Kerr Avenue • Unit B
Wilmington, NC 28403 • 910.332.3360
www.thomasandhutton.com
Savannah, GA | Brunswick, GA | Charleston, SC | Myrtle Beach, SC

FLOURNOY DEVELOPMENT COMPANY
NEW HANOVER COUNTY, NC

AMBERLEIGH SHORES

OVERALL CONCEPT PLAN

JOB NO:	J-22667
DATE:	11/15/11
DRAWN:	BDR
DESIGNED:	BDR
REVIEWED:	JDR
APPROVED:	JDR
SCALE:	#########

G1.3

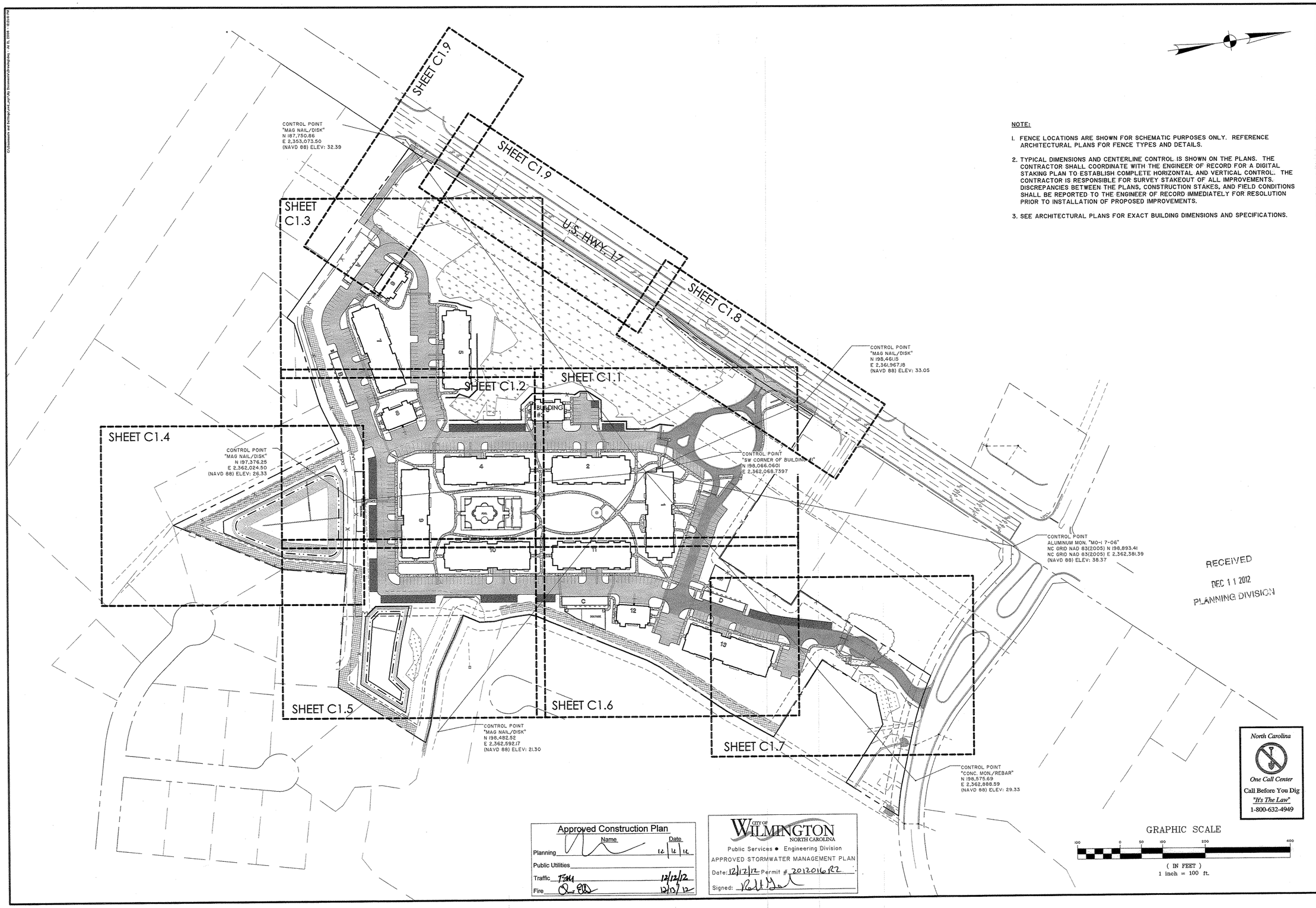

NOTE:

1. FENCE LOCATIONS ARE SHOWN FOR SCHEMATIC PURPOSES ONLY. REFERENCE ARCHITECTURAL PLANS FOR FENCE TYPES AND DETAILS.
2. TYPICAL DIMENSIONS AND CENTERLINE CONTROL IS SHOWN ON THE PLANS. THE CONTRACTOR SHALL COORDINATE WITH THE ENGINEER OF RECORD FOR A DIGITAL STAKING PLAN TO ESTABLISH COMPLETE HORIZONTAL AND VERTICAL CONTROL. THE CONTRACTOR IS RESPONSIBLE FOR SURVEY STAKEOUT OF ALL IMPROVEMENTS. DISCREPANCIES BETWEEN THE PLANS, CONSTRUCTION STAKES, AND FIELD CONDITIONS SHALL BE REPORTED TO THE ENGINEER OF RECORD IMMEDIATELY FOR RESOLUTION PRIOR TO INSTALLATION OF PROPOSED IMPROVEMENTS.
3. SEE ARCHITECTURAL PLANS FOR EXACT BUILDING DIMENSIONS AND SPECIFICATIONS.

RECEIVED
DEC 11 2012
PLANNING DIVISION

North Carolina
One Call Center
Call Before You Dig
"It's The Law"
1-800-632-4949

Approved Construction Plan

	Name	Date
Planning		12/12/12
Public Utilities		
Traffic		12/12/12
Fire		12/13/12

CITY OF WILMINGTON NORTH CAROLINA
Public Services • Engineering Division
APPROVED STORMWATER MANAGEMENT PLAN
Date: 12/12/12 Permit # 20120160122
Signed:

NORTH CAROLINA PROFESSIONAL ENGINEER SEAL 028179 JOHN D. REID

THOMAS ENGINEERING CO. NORTH CAROLINA CERTIFICATE OF AUTHORIZATION No. F-0871

NO.	REVISIONS	BY	DATE
14	SEE REVISION SUMMARY ON SHEET G1.0	BDR	12/05/12
12	ADD PREVIOUS REVISION NOTES	BDR	08/27/12
11	SEE REVISION SUMMARY ON SHEET G1.0	BDR	08/07/12
10	SEE REVISION SUMMARY ON SHEET G1.0	BDR	07/24/12
9	REVISE EMERGENCY ACCESS DRIVEWAY LOCATION	BDR	07/20/12
6	SEE REVISION SUMMARY ON SHEET G1.0	BDR	06/18/12
4	SEE REVISION SUMMARY ON SHEET G1.0	BDR	04/23/12
1	SEE REVISION SUMMARY ON SHEET G1.0	BDR	01/25/12

THOMAS & HUTTON
Engineering | Surveying | Planning | GIS | Consulting
215 South Kerr Avenue • Unit B
Wilmington, NC 28403 • 910.332.3360
www.thomasandhutton.com
Savannah, GA | Brunswick, GA | Charleston, SC | Myrtle Beach, SC

FLOURNOY DEVELOPMENT COMPANY
NEW HANOVER COUNTY, NC
AMBERLEIGH SHORES
LAYOUT - STAKING - SIGNAGE OVERALL

JOB NO:	J-22667
DATE:	11/15/11
DRAWN:	BDR
DESIGNED:	BDR
REVIEWED:	JDR
APPROVED:	JDR
SCALE:	1" = 100'

C1.0

NOTE:

1. SIGNAGE MATERIALS AND INSTALLATION SHALL BE IN ACCORDANCE WITH NCDOT AND MUTCD SPECIFICATIONS AND DETAILS, CURRENT EDITION. THE MORE RESTRICTIVE SHALL APPLY.
2. ALL PAVEMENT MARKINGS IN PUBLIC RIGHTS-OF-WAY AND FOR DRIVEWAYS ARE TO BE THERMOPLASTIC AND MEET CITY AND/OR NCDOT STANDARDS. ALL OTHER STRIPING SHALL BE A DOUBLE COAT OF STANDARD LATEX TRAFFIC PAINT.
3. ALL TRAFFIC CONTROL SIGNS AND MARKINGS OUTSIDE OF PUBLIC RIGHTS-OF-WAY ARE TO BE MAINTAINED BY THE PROPERTY OWNER TO MUTCD STANDARDS.
4. CURB AND GUTTER SHALL BE EXTRUDED CURB AND GUTTER EXCEPT WHERE NOTED.
5. GUTTER SHALL BE DEPRESSED IN 2-FEET AT ALL SIDEWALK RAMPS. SEE DETAILS.
6. DIMENSIONS TO EDGE OF PAVEMENT.

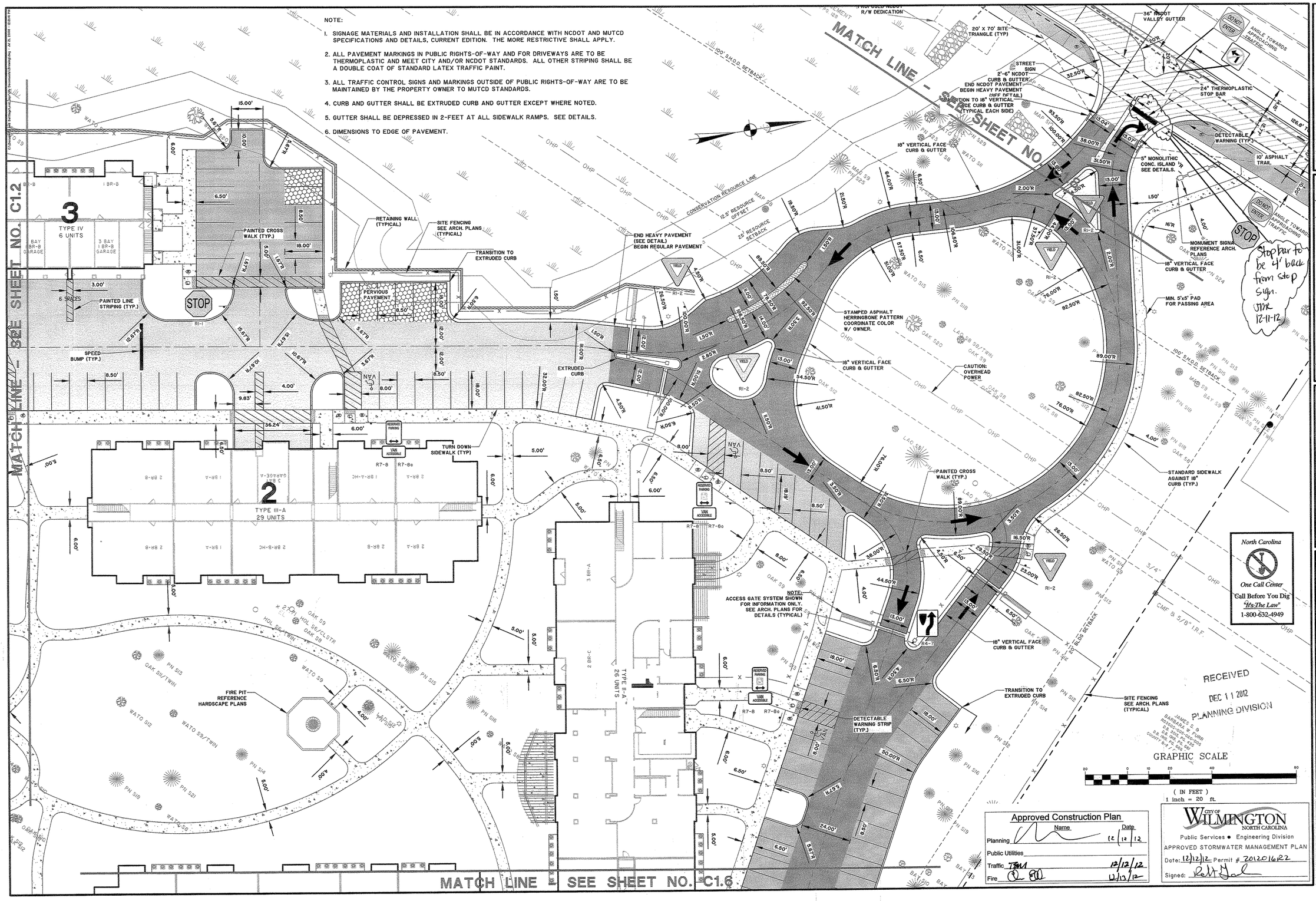

North Carolina
One Call Center
Call Before You Dig
"It's The Law"
1-800-632-4949

Approved Construction Plan

	Name	Date
Planning		12/12/12
Public Utilities		
Traffic	TM	12/12/12
Fire		12/13/12

CITY OF WILMINGTON NORTH CAROLINA
Public Services • Engineering Division
APPROVED STORMWATER MANAGEMENT PLAN
Date: 12/12/12 Permit # 20120161R2
Signed:

NORTH CAROLINA PROFESSIONAL ENGINEER SEAL THOMAS & HUTTON ENGINEERING No. P-0871 CERTIFICATE OF AUTHORIZATION

JACK DREW
9/27/12

NO.	REVISIONS	BY	DATE
12	ADD PREVIOUS REVISION NOTES	BDR	09/27/12
11	CHANGE 5 PARKING SPACES TO PERVIOUS AT BLDG 3	BDR	09/07/12
10	SEE REVISION SUMMARY ON SHEET 0.0	BDR	07/24/12
9	SEE REVISION SUMMARY ON SHEET 0.0	BDR	05/18/12
6	SEE REVISION SUMMARY ON SHEET 0.0	BDR	04/23/12
4	SEE REVISION SUMMARY ON SHEET 0.0	BDR	01/26/12

THOMAS & HUTTON
Engineering | Surveying | Planning | GIS | Consulting
215 South Kerr Avenue • Unit B
Wilmington, NC 28403 • 910.332.3360
www.thomasandhutton.com
Savannah, GA | Brunswick, GA | Charleston, SC | Myrtle Beach, SC

FLOURNOY DEVELOPMENT COMPANY
NEW HANOVER COUNTY, NC

AMBERLEIGH SHORES

LAYOUT - STAKING- SIGNAGE PLAN

JOB NO:	J-22667
DATE:	11/15/11
DRAWN:	BDR
DESIGNED:	BDR
REVIEWED:	JDR
APPROVED:	JDR
SCALE:	1" = 20'

C1.1

NOTE:

1. SIGNAGE MATERIALS AND INSTALLATION SHALL BE IN ACCORDANCE WITH NCDOT AND MUTCD SPECIFICATIONS AND DETAILS, CURRENT EDITION. THE MORE RESTRICTIVE SHALL APPLY.
2. ALL PAVEMENT MARKINGS IN PUBLIC RIGHTS-OF-WAY AND FOR DRIVEWAYS ARE TO BE THERMOPLASTIC AND MEET CITY AND/OR NCDOT STANDARDS. ALL OTHER STRIPING SHALL BE A DOUBLE COAT OF STANDARD LATEX TRAFFIC PAINT.
3. ALL TRAFFIC CONTROL SIGNS AND MARKINGS OUTSIDE OF PUBLIC RIGHTS-OF-WAY ARE TO BE MAINTAINED BY THE PROPERTY OWNER TO MUTCD STANDARDS.
4. CURB AND GUTTER SHALL BE EXTRUDED CURB AND GUTTER EXCEPT WHERE NOTED.
5. GUTTER SHALL BE DEPRESSED IN 2-FEET AT ALL SIDEWALK RAMPS. SEE DETAILS.
6. DIMENSIONS TO EDGE OF PAVEMENT.

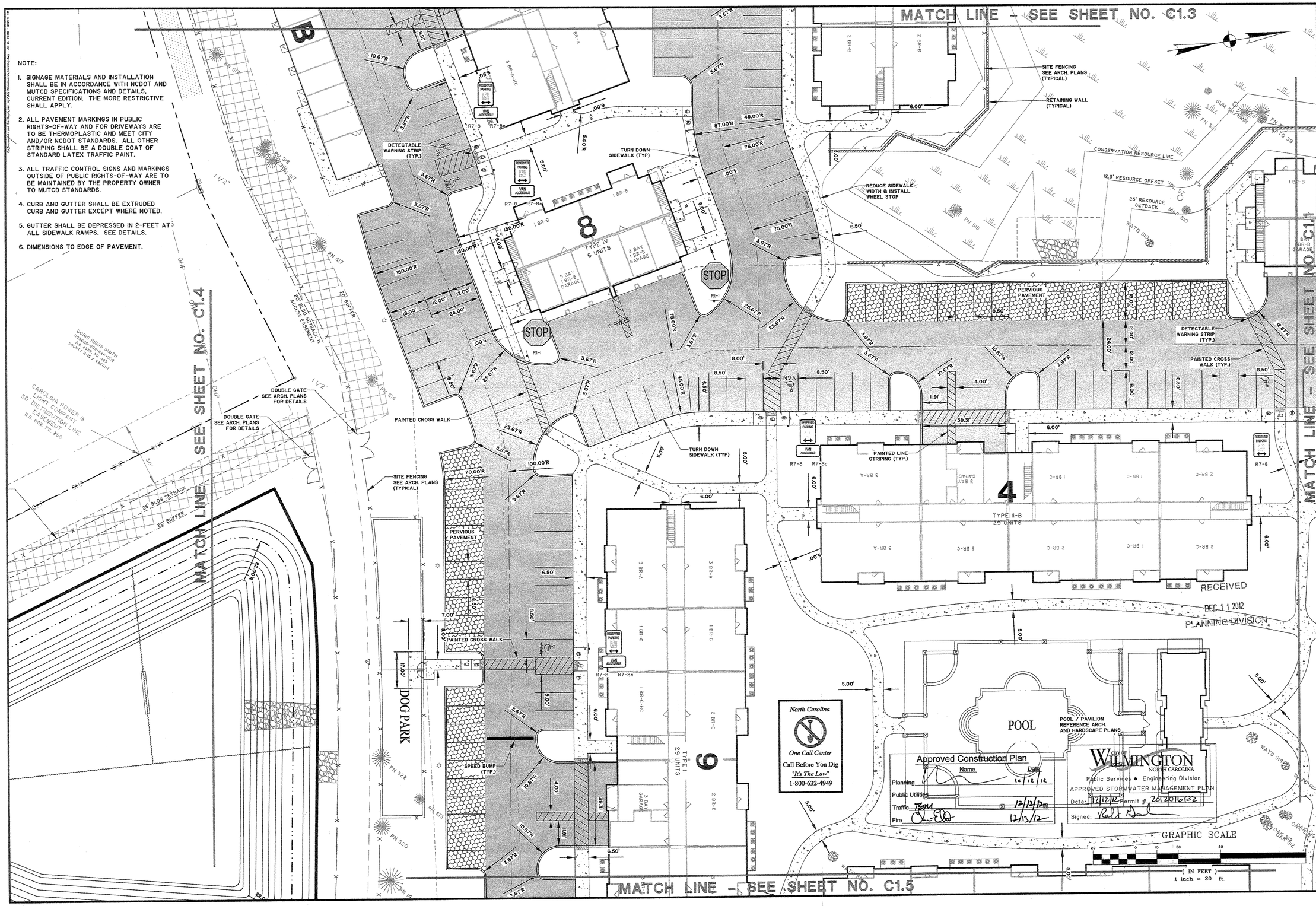

NORTH CAROLINA PROFESSIONAL ENGINEER SEAL 28179 JACK D. REEL 8/27/12

NORTH CAROLINA THOMAS & HUTTON ENGINEERING CO. No. F-0871 CERTIFICATE OF AUTHORIZATION

NO.	REVISIONS	BY	DATE
12	ADD PREVIOUS REVISION NOTES	BDR	08/27/12
10	SEE REVISION SUMMARY ON SHEET GLO	BDR	07/24/12
6	SEE REVISION SUMMARY ON SHEET GLO	BDR	05/18/12
4	SEE REVISION SUMMARY ON SHEET GLO	BDR	04/23/12
1	SEE REVISION SUMMARY ON SHEET GLO	BDR	01/25/12

THOMAS & HUTTON
Engineering | Surveying | Planning | GIS | Consulting
215 South Kerr Avenue • Unit B
Wilmington, NC 28403 • 910.332.3360
www.thomasandhutton.com
Savannah, GA | Brunswick, GA | Charleston, SC | Myrtle Beach, SC

FLOURNOY DEVELOPMENT COMPANY

NEW HANOVER COUNTY, NC

AMBERLEIGH SHORES

LAYOUT - STAKING- SIGNAGE PLAN

JOB NO:	J-22667
DATE:	11/15/11
DRAWN:	BDR
DESIGNED:	BDR
REVIEWED:	JDR
APPROVED:	JDR
SCALE:	1" = 20'

C1.2

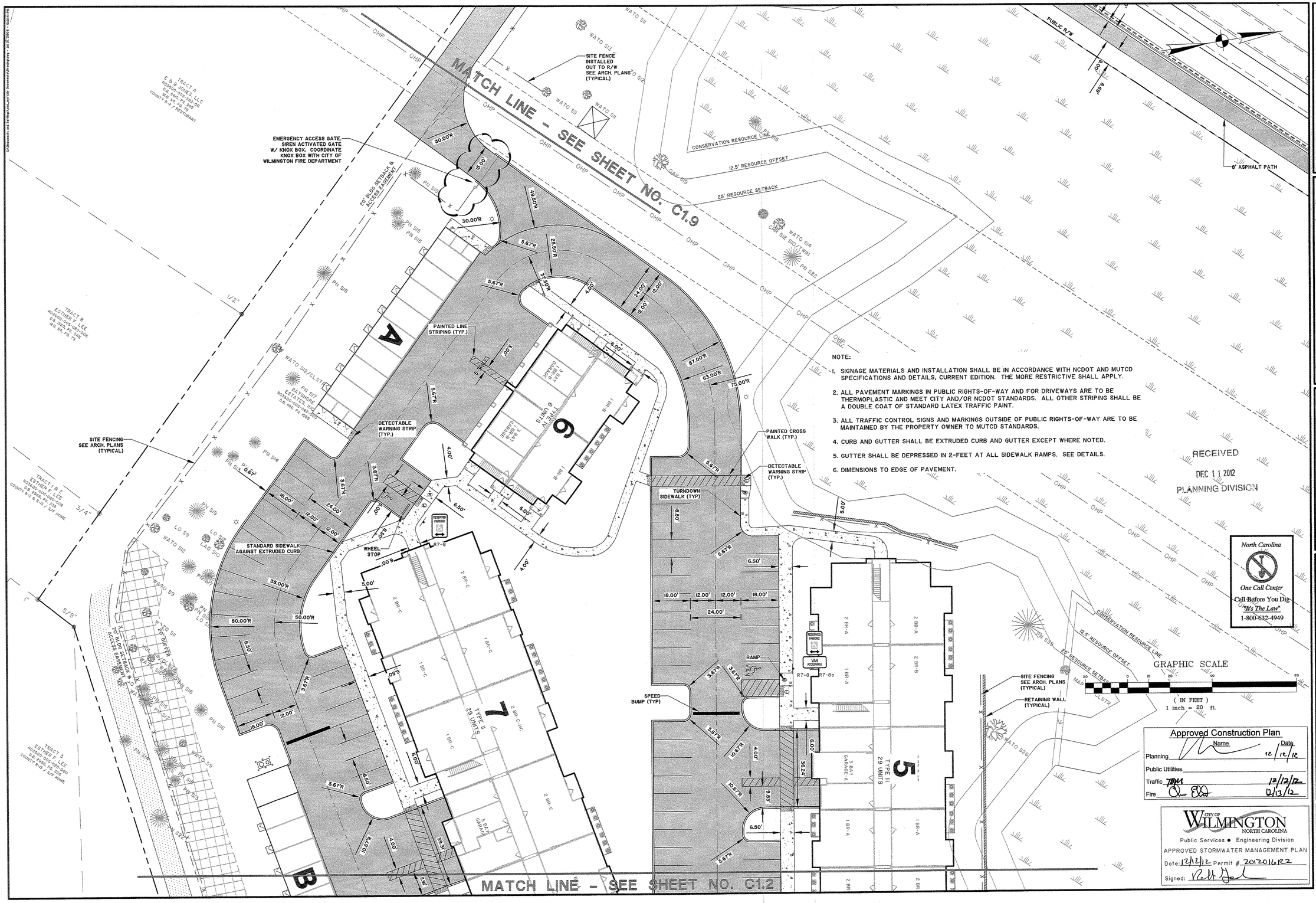

NOTE:

1. SIGNAGE MATERIALS AND INSTALLATION SHALL BE IN ACCORDANCE WITH NCDOT AND MUTCD SPECIFICATIONS AND DETAILS, CURRENT EDITION. THE MORE RESTRICTIVE SHALL APPLY.
2. ALL PAVEMENT MARKINGS IN PUBLIC RIGHTS-OF-WAY AND FOR DRIVEWAYS ARE TO BE THERMOPLASTIC AND MEET CITY AND/OR NCDOT STANDARDS. ALL OTHER STRIPING SHALL BE A DOUBLE COAT OF STANDARD LATEX TRAFFIC PAINT.
3. ALL TRAFFIC CONTROL SIGNS AND MARKINGS OUTSIDE OF PUBLIC RIGHTS-OF-WAY ARE TO BE MAINTAINED BY THE PROPERTY OWNER TO MUTCD STANDARDS.
4. CURB AND GUTTER SHALL BE EXTRUDED CURB AND GUTTER EXCEPT WHERE NOTED.
5. GUTTER SHALL BE DEPRESSED IN 2-FEET AT ALL SIDEWALK RAMPS. SEE DETAILS.
6. DIMENSIONS TO EDGE OF PAVEMENT.

RECEIVED
DEC 11 2012
PLANNING DIVISION

North Carolina
One Call Center
Call Before You Dig.
"It's The Law"
1-800-632-4949

Approved Construction Plan

	Name	Date
Planning		12/12/12
Public Utilities		
Traffic		12/12/12
Fire		12/13/12

CITY OF WILMINGTON NORTH CAROLINA
Public Services • Engineering Division
APPROVED STORMWATER MANAGEMENT PLAN
Date: 12/12/12 Permit # 20120161R2
Signed:

NO.	REVISIONS	BY	DATE
14	REV. EMERGENCY GATE SYMBOL & FENCE LOCATION	BDR	12/05/12
12	ADD PREVIOUS REVISION NOTES	BDR	08/27/12
10	SEE REVISION SUMMARY ON SHEET G.O.	BDR	07/24/12
8	SEE REVISION SUMMARY ON SHEET G.O.	BDR	06/18/12
6	SEE REVISION SUMMARY ON SHEET G.O.	BDR	04/23/12
4	SEE REVISION SUMMARY ON SHEET G.O.	BDR	03/29/12
1	SEE REVISION SUMMARY ON SHEET G.O.	BDR	02/22/12

NORTH CAROLINA PROFESSIONAL ENGINEER SEAL — THOMAS & HUTTON ENGINEERING CERTIFICATE OF AUTHORIZATION No. F-0871

NORTH CAROLINA PROFESSIONAL ENGINEER SEAL — JASON D. RIDDLE — SEAL 029715 — 12/05/12

THOMAS & HUTTON
Engineering | Surveying | Planning | GIS | Consulting
215 South Kerr Avenue • Unit B
Wilmington, NC 28403 • 910.332.3360
www.thomasandhutton.com
Savannah, GA | Brunswick, GA | Charleston, SC | Myrtle Beach, SC

FLOURNOY DEVELOPMENT COMPANY
NEW HANOVER COUNTY, NC

AMBERLEIGH SHORES

LAYOUT - STAKING- SIGNAGE PLAN

JOB NO:	J-22667
DATE:	11/15/11
DRAWN:	BDR
DESIGNED:	BDR
REVIEWED:	JDR
APPROVED:	JDR
SCALE:	1" = 20'

C1.3

NOTE:

1. SIGNAGE MATERIALS AND INSTALLATION SHALL BE IN ACCORDANCE WITH NCDOT AND MUTCD SPECIFICATIONS AND DETAILS, CURRENT EDITION. THE MORE RESTRICTIVE SHALL APPLY.
2. ALL PAVEMENT MARKINGS IN PUBLIC RIGHTS-OF-WAY AND FOR DRIVEWAYS ARE TO BE THERMOPLASTIC AND MEET CITY AND/OR NCDOT STANDARDS. ALL OTHER STRIPING SHALL BE A DOUBLE COAT OF STANDARD LATEX TRAFFIC PAINT.
3. ALL TRAFFIC CONTROL SIGNS AND MARKINGS OUTSIDE OF PUBLIC RIGHTS-OF-WAY ARE TO BE MAINTAINED BY THE PROPERTY OWNER TO MUTCD STANDARDS.
4. CURB AND GUTTER SHALL BE EXTRUDED CURB AND GUTTER EXCEPT WHERE NOTED.
5. GUTTER SHALL BE DEPRESSED IN 2-FEET AT ALL SIDEWALK RAMPS. SEE DETAILS.
6. DIMENSIONS TO EDGE OF PAVEMENT.

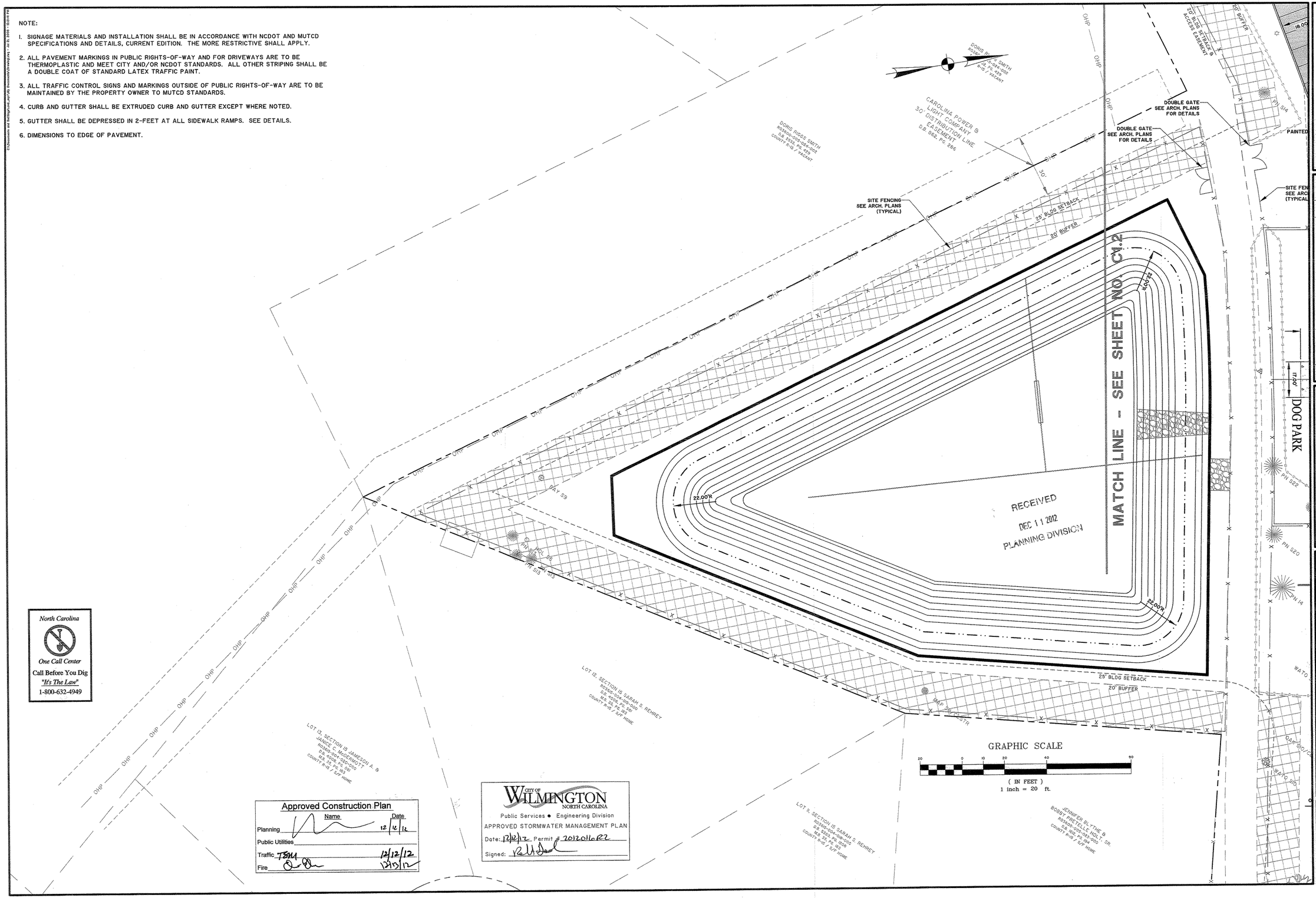

NORTH CAROLINA PROFESSIONAL ENGINEERING SEAL 9/27/12

NORTH CAROLINA PROFESSIONAL SEAL 19811 LICENSED JACKIE D. RIDDLE

NO.	REVISIONS	BY	DATE
12	ADD PREVIOUS REVISION NOTES	BDR	09/27/12
6	SEE REVISION SUMMARY ON SHEET 0.0	BDR	05/16/12
4	SEE REVISION SUMMARY ON SHEET 0.0	BDR	04/23/12
	SEE REVISION SUMMARY ON SHEET 0.0	BDR	01/23/12

THOMAS & HUTTON
Engineering | Surveying | Planning | GIS | Consulting
215 South Kerr Avenue • Unit B
Wilmington, NC 28403 • 910.332.3360
www.thomasandhutton.com
Savannah, GA | Brunswick, GA | Charleston, SC | Myrtle Beach, SC

FLOURNOY DEVELOPMENT COMPANY

NEW HANOVER COUNTY, NC

AMBERLEIGH SHORES

LAYOUT - STAKING- SIGNAGE PLAN

JOB NO:	J-22667
DATE:	11/15/11
DRAWN:	BDR
DESIGNED:	BDR
REVIEWED:	JDR
APPROVED:	JDR
SCALE:	1" = 20'

C1.4

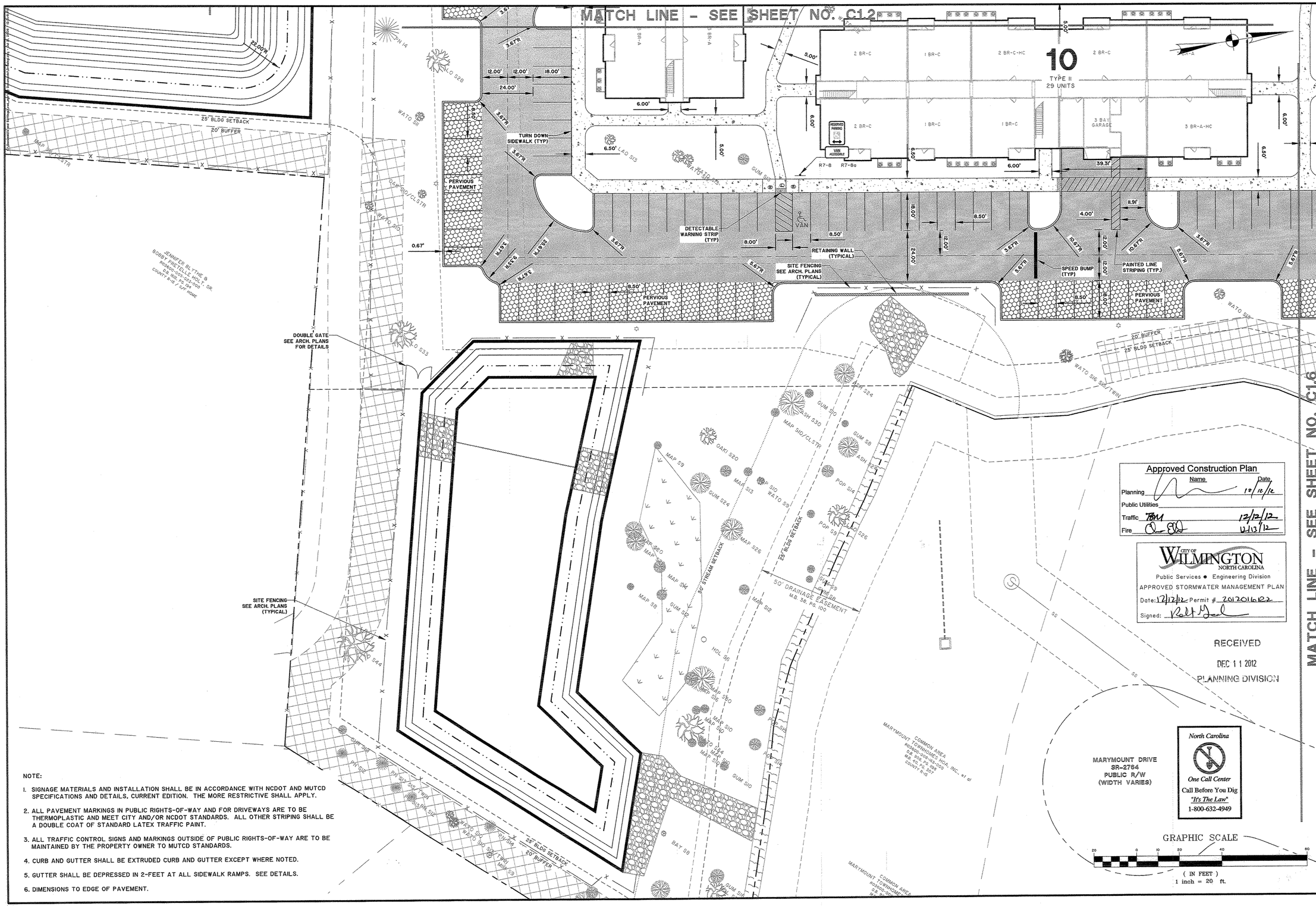

NOTE:

1. SIGNAGE MATERIALS AND INSTALLATION SHALL BE IN ACCORDANCE WITH NCDOT AND MUTCD SPECIFICATIONS AND DETAILS, CURRENT EDITION. THE MORE RESTRICTIVE SHALL APPLY.
2. ALL PAVEMENT MARKINGS IN PUBLIC RIGHTS-OF-WAY AND FOR DRIVEWAYS ARE TO BE THERMOPLASTIC AND MEET CITY AND/OR NCDOT STANDARDS. ALL OTHER STRIPING SHALL BE A DOUBLE COAT OF STANDARD LATEX TRAFFIC PAINT.
3. ALL TRAFFIC CONTROL SIGNS AND MARKINGS OUTSIDE OF PUBLIC RIGHTS-OF-WAY ARE TO BE MAINTAINED BY THE PROPERTY OWNER TO MUTCD STANDARDS.
4. CURB AND GUTTER SHALL BE EXTRUDED CURB AND GUTTER EXCEPT WHERE NOTED.
5. GUTTER SHALL BE DEPRESSED IN 2-FEET AT ALL SIDEWALK RAMPS. SEE DETAILS.
6. DIMENSIONS TO EDGE OF PAVEMENT.

Approved Construction Plan

	Name	Date
Planning		12/12/12
Public Utilities		
Traffic	TBM	12/12/12
Fire		12/13/12

CITY OF WILMINGTON NORTH CAROLINA
Public Services • Engineering Division
APPROVED STORMWATER MANAGEMENT PLAN
Date: 12/12/12 Permit # 20120106122
Signed:

RECEIVED
DEC 11 2012
PLANNING DIVISION

North Carolina
One Call Center
Call Before You Dig
"It's The Law"
1-800-632-4949

NORTH CAROLINA PROFESSIONAL SEAL 030 JOHN R. HUTTON ENGINEERING CERTIFICATE OF AUTHORITY No. F-0871

NORTH CAROLINA PROFESSIONAL SEAL 030 JOHN R. HUTTON

NO.	BY	DATE
12	BDR	08/27/12
6	BDR	05/16/12
5	BDR	04/23/12
4	BDR	01/25/12
	ADD PREVIOUS REVISION NOTES	
	SEE REVISION SUMMARY ON SHEET G.0	
	SEE REVISION SUMMARY ON SHEET G.0	
	SEE REVISION SUMMARY ON SHEET G.0	
	REVISIONS	

THOMAS & HUTTON
Engineering | Surveying | Planning | GIS | Consulting
215 South Kerr Avenue • Unit B
Wilmington, NC 28403 • 910.332.3360
www.thomasandhutton.com
Savannah, GA | Brunswick, GA | Charleston, SC | Myrtle Beach, SC

FLOURNOY DEVELOPMENT COMPANY
NEW HANOVER COUNTY, NC

AMBERLEIGH SHORES

LAYOUT - STAKING- SIGNAGE PLAN

JOB NO:	J-22667
DATE:	11/15/11
DRAWN:	BDR
DESIGNED:	BDR
REVIEWED:	JDR
APPROVED:	JDR
SCALE:	1" = 20'

C1.5

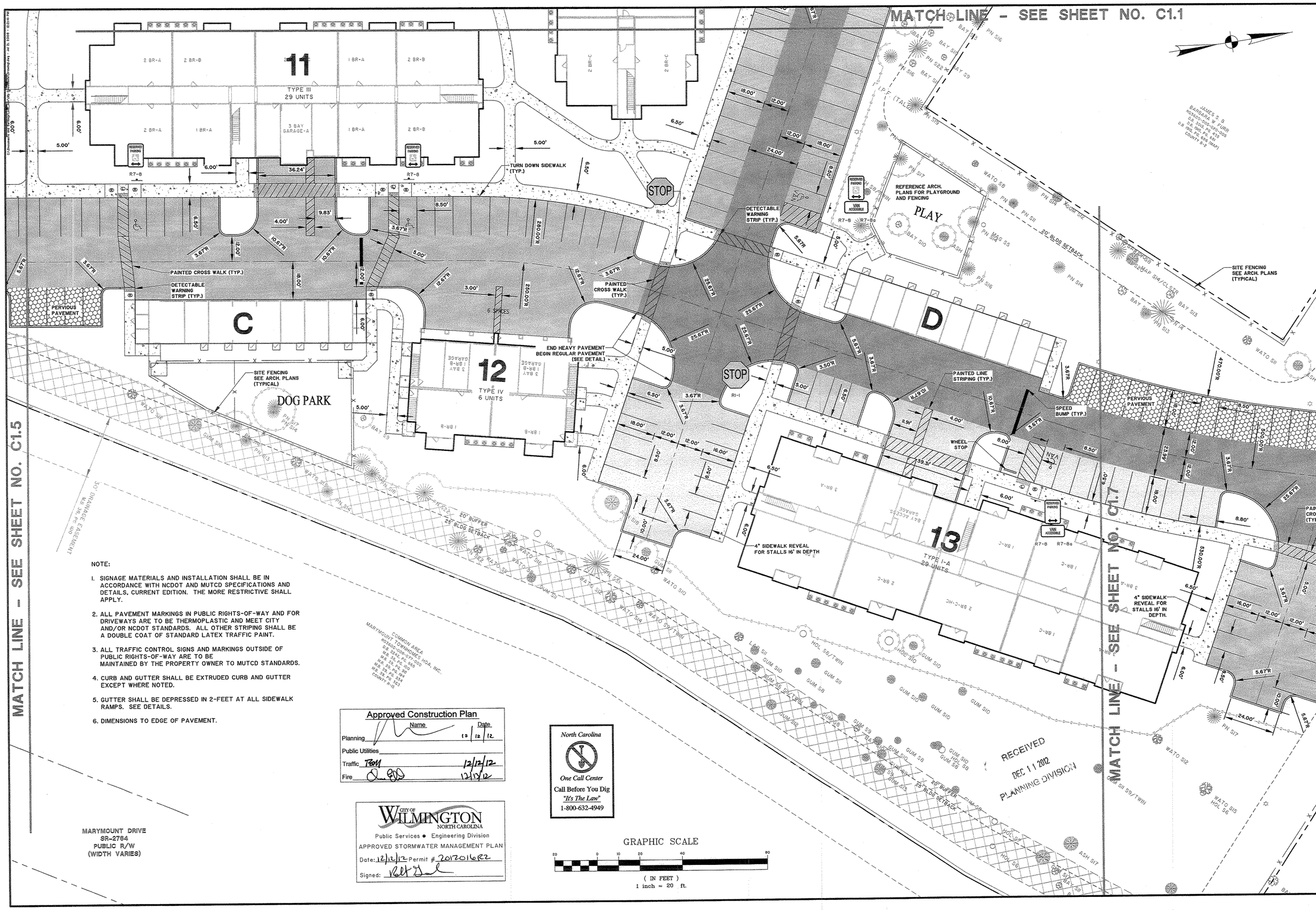

NOTE:

1. SIGNAGE MATERIALS AND INSTALLATION SHALL BE IN ACCORDANCE WITH NCDOT AND MUTCD SPECIFICATIONS AND DETAILS, CURRENT EDITION. THE MORE RESTRICTIVE SHALL APPLY.
2. ALL PAVEMENT MARKINGS IN PUBLIC RIGHTS-OF-WAY AND FOR DRIVEWAYS ARE TO BE THERMOPLASTIC AND MEET CITY AND/OR NCDOT STANDARDS. ALL OTHER STRIPING SHALL BE A DOUBLE COAT OF STANDARD LATEX TRAFFIC PAINT.
3. ALL TRAFFIC CONTROL SIGNS AND MARKINGS OUTSIDE OF PUBLIC RIGHTS-OF-WAY ARE TO BE MAINTAINED BY THE PROPERTY OWNER TO MUTCD STANDARDS.
4. CURB AND GUTTER SHALL BE EXTRUDED CURB AND GUTTER EXCEPT WHERE NOTED.
5. GUTTER SHALL BE DEPRESSED IN 2-FEET AT ALL SIDEWALK RAMPS. SEE DETAILS.
6. DIMENSIONS TO EDGE OF PAVEMENT.

Approved Construction Plan

	Name	Date
Planning		12/12/12
Public Utilities		
Traffic	TBM	12/12/12
Fire		12/12/12

CITY OF WILMINGTON NORTH CAROLINA
Public Services • Engineering Division
APPROVED STORMWATER MANAGEMENT PLAN
Date: 12/12/12 Permit # 2012016R2
Signed:

North Carolina
One Call Center
Call Before You Dig
"It's The Law"
1-800-632-4949

NORTH CAROLINA PROFESSIONAL ENGINEER SEAL 28179 JACK D. REEL 8/27/12

THOMAS & HUTTON
Engineering | Surveying | Planning | GIS | Consulting
215 South Kerr Avenue • Unit B
Wilmington, NC 28403 • 910.332.3360
www.thomasandhutton.com
Savannah, GA | Brunswick, GA | Charleston, SC | Myrtle Beach, SC

NO.	REVISIONS	BY	DATE
12	ADD PREVIOUS REVISION NOTES	BDR	08/27/12
6	SEE REVISION SUMMARY ON SHEET G1.0	BDR	05/18/12
4	SEE REVISION SUMMARY ON SHEET G1.0	BDR	04/23/12
1	SEE REVISION SUMMARY ON SHEET G1.0	BDR	01/25/12

FLOURNOY DEVELOPMENT COMPANY
NEW HANOVER COUNTY, NC

AMBERLEIGH SHORES

LAYOUT - STAKING- SIGNAGE PLAN

JOB NO:	J-22667
DATE:	11/15/11
DRAWN:	BDR
DESIGNED:	BDR
REVIEWED:	JDR
APPROVED:	JDR
SCALE:	1" = 20'

C1.6

NOTE:

1. SIGNAGE MATERIALS AND INSTALLATION SHALL BE IN ACCORDANCE WITH NCDOT AND MUTCD SPECIFICATIONS AND DETAILS, CURRENT EDITION. THE MORE RESTRICTIVE SHALL APPLY.
2. ALL PAVEMENT MARKINGS IN PUBLIC RIGHTS-OF-WAY AND FOR DRIVEWAYS ARE TO BE THERMOPLASTIC AND MEET CITY AND/OR NCDOT STANDARDS. ALL OTHER STRIPING SHALL BE A DOUBLE COAT OF STANDARD LATEX TRAFFIC PAINT.
3. ALL TRAFFIC CONTROL SIGNS AND MARKINGS OUTSIDE OF PUBLIC RIGHTS-OF-WAY ARE TO BE MAINTAINED BY THE PROPERTY OWNER TO MUTCD STANDARDS.
4. CURB AND GUTTER SHALL BE EXTRUDED CURB AND GUTTER EXCEPT WHERE NOTED.
5. GUTTER SHALL BE DEPRESSED IN 2-FEET AT ALL SIDEWALK RAMPS. SEE DETAILS.
6. DIMENSIONS TO EDGE OF PAVEMENT.

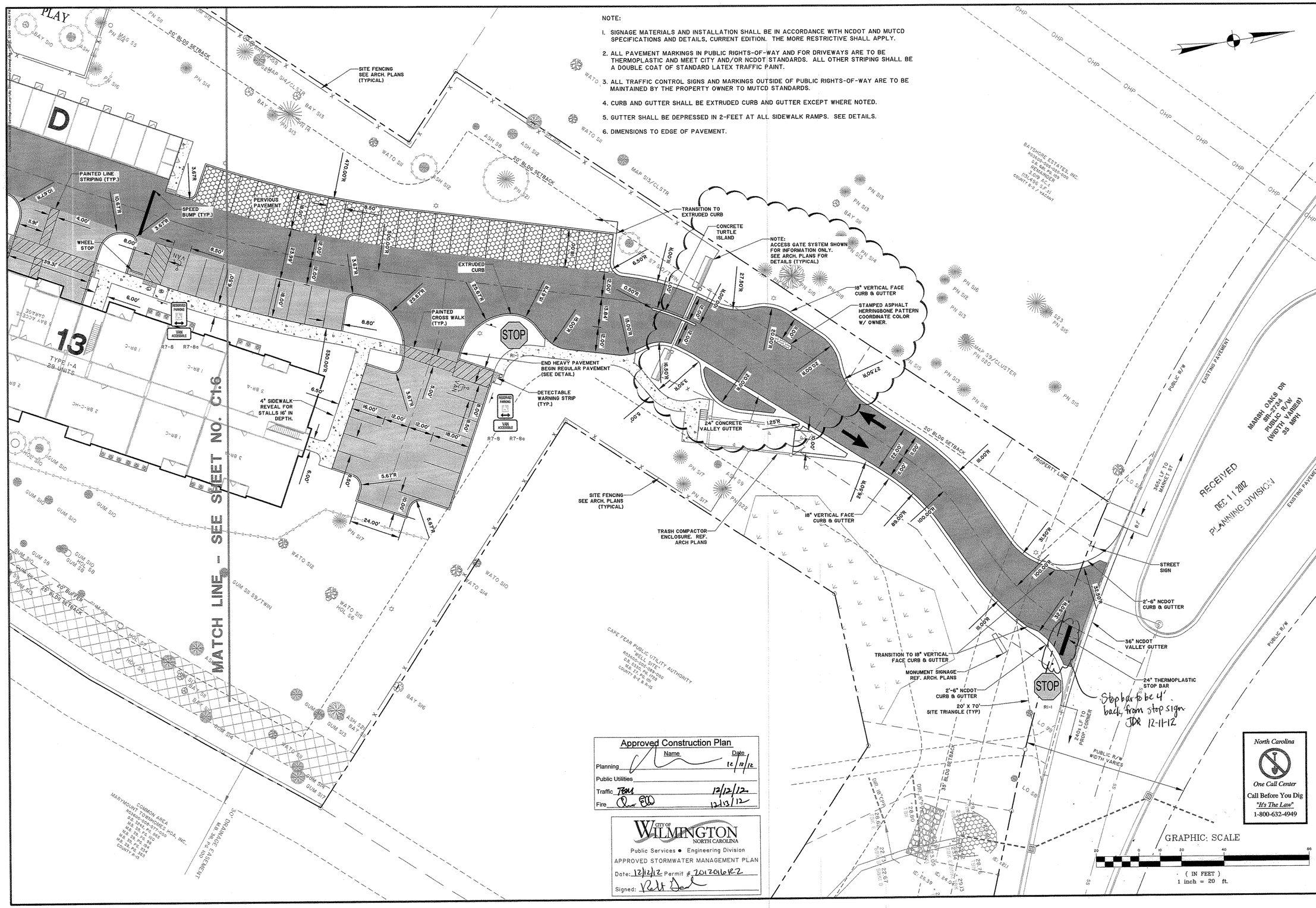

Approved Construction Plan

	Name	Date
Planning		12/12/12
Public Utilities		
Traffic	TBM	12/12/12
Fire		12/13/12

CITY OF WILMINGTON NORTH CAROLINA
Public Services • Engineering Division
APPROVED STORMWATER MANAGEMENT PLAN
Date: 12/12/12 Permit # 2012016R2
Signed:

NORTH CAROLINA PROFESSIONAL ENGINEERING CERTIFICATE OF AUTHORITY THOMAS & HUTTON ENGINEERING CO. No. F-0871

NORTH CAROLINA PROFESSIONAL SEAL 019 JACK D. DEES JR. 12/05/12

NO.	REVISIONS	BY	DATE
14	SEE REVISION SUMMARY ON SHEET G1.0	BDR	12/05/12
12	ADD PREVIOUS REVISION NOTES	BDR	08/27/12
6	SEE REVISION SUMMARY ON SHEET G1.0	BDR	06/18/12
4	SEE REVISION SUMMARY ON SHEET G1.0	BDR	04/23/12
1	SEE REVISION SUMMARY ON SHEET G1.0	BDR	01/23/12

THOMAS & HUTTON
Engineering | Surveying | Planning | GIS | Consulting
215 South Kerr Avenue • Unit B
Wilmington, NC 28403 • 910.332.3360
www.thomasandhutton.com
Savannah, GA | Brunswick, GA | Charleston, SC | Myrtle Beach, SC

FLOURNOY DEVELOPMENT COMPANY
NEW HANOVER COUNTY, NC

AMBERLEIGH SHORES

LAYOUT - STAKING- SIGNAGE PLAN

JOB NO:	J-22667
DATE:	11/15/11
DRAWN:	BDR
DESIGNED:	BDR
REVIEWED:	JDR
APPROVED:	JDR
SCALE:	1" = 20'

C1.7

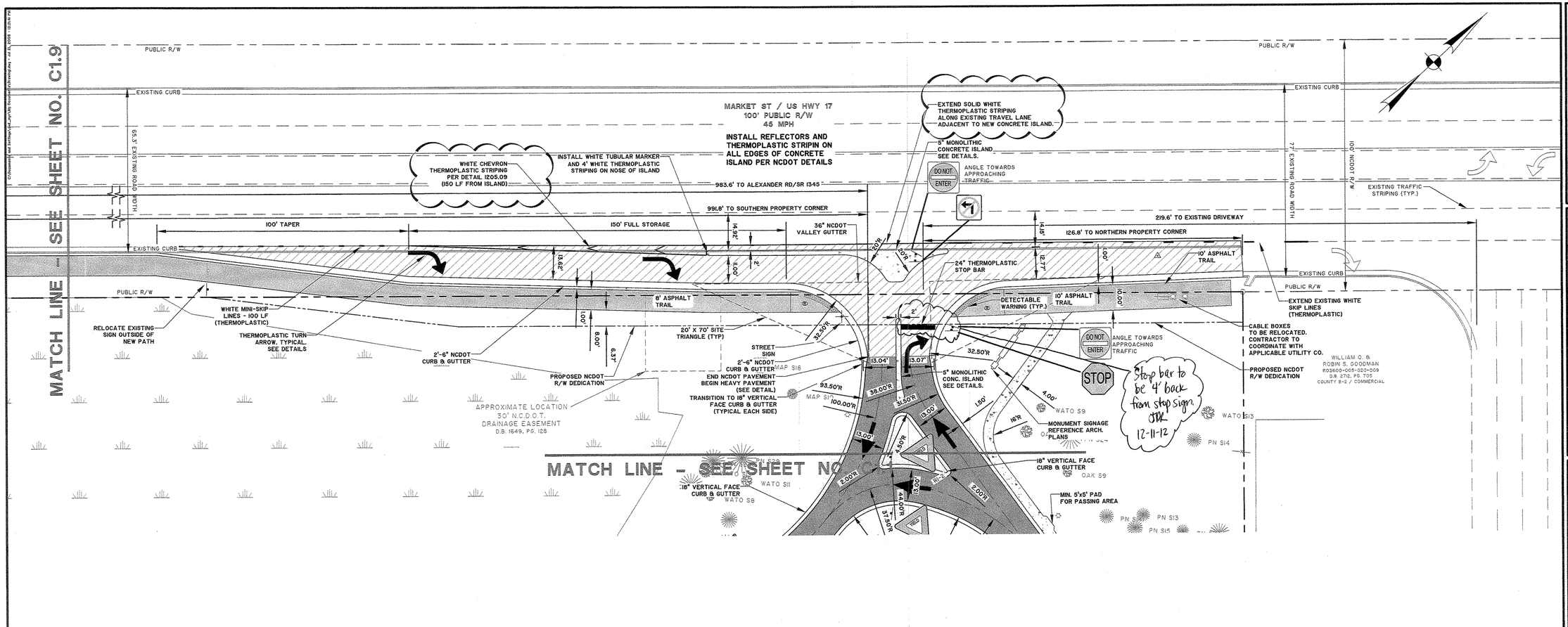

RECEIVED
DEC 11 2012
PLANNING DIVISION

GRAPHIC SCALE
20 0 10 20 40 80
(IN FEET)
1 inch = 20 ft.

North Carolina
One Call Center
Call Before You Dig
"It's The Law"
1-800-632-4949

Approved Construction Plan

	Name	Date
Planning		12/12/12
Public Utilities		
Traffic	TSM	12/12/12
Fire		12/13/12

CITY OF WILMINGTON NORTH CAROLINA
Public Services • Engineering Division
APPROVED STORMWATER MANAGEMENT PLAN
Date: 12/12/12 Permit # 20120168R2
Signed:

NORTH CAROLINA PROFESSIONAL SEAL THOMAS & HUTTON ENGINEERING No. F-0871 CERTIFICATE OF AUTHORIZATION

NORTH CAROLINA PROFESSIONAL SEAL 029 JAMES D. HUTTON JR. PROFESSIONAL ENGINEER
12/05/12

NO.	REVISIONS	BY	DATE
14	REVISE TURN LANE STRIPING PER NCDOT PERMIT	BDR	12/05/12
12	ADD PREVIOUS REVISION NOTES	BDR	09/27/12
6	SEE REVISION SUMMARY ON SHEET 8.0	BDR	05/18/12
4	SEE REVISION SUMMARY ON SHEET 8.0	BDR	04/23/12
1	SEE REVISION SUMMARY ON SHEET 8.0	BDR	01/23/12

THOMAS & HUTTON
Engineering | Surveying | Planning | GIS | Consulting
215 South Kerr Avenue • Unit B
Wilmington, NC 28403 • 910.332.3360
www.thomasandhutton.com
Savannah, GA | Brunswick, GA | Charleston, SC | Myrtle Beach, SC

FLOURNOY DEVELOPMENT COMPANY
NEW HANOVER COUNTY, NC

AMBERLEIGH SHORES

LAYOUT - STAKING- SIGNAGE PLAN

JOB NO:	J-22667
DATE:	11/15/11
DRAWN:	BDR
DESIGNED:	BDR
REVIEWED:	JDR
APPROVED:	JDR
SCALE:	########

C1.8

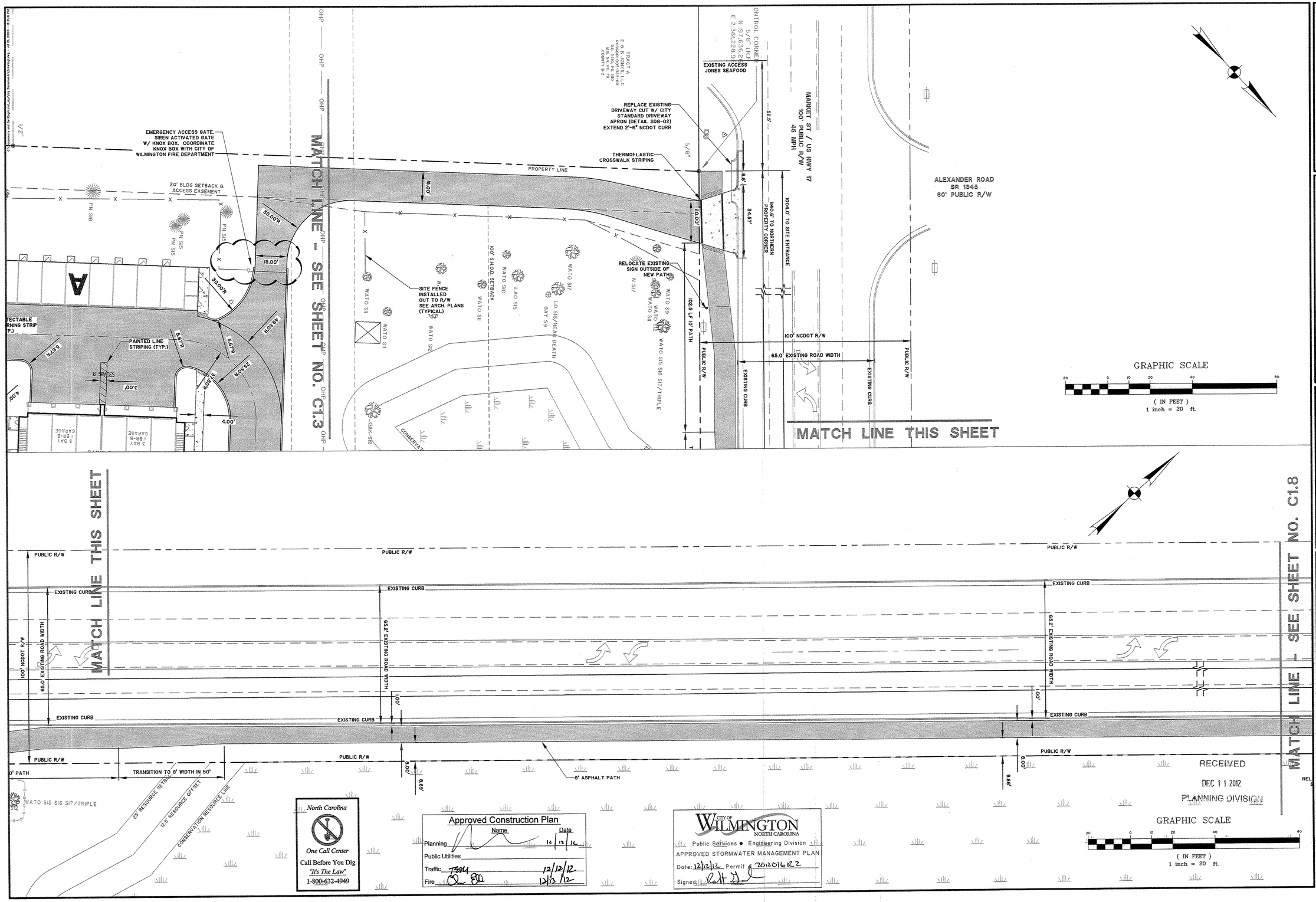

North Carolina
One Call Center
Call Before You Dig
"It's The Law"
1-800-632-4949

Approved Construction Plan

	Name	Date
Planning		12/12/12
Public Utilities		
Traffic	TEM	12/12/12
Fire		12/13/12

CITY OF WILMINGTON NORTH CAROLINA
Public Services • Engineering Division
APPROVED STORMWATER MANAGEMENT PLAN
Date: 12/12/12 Permit # 20120161R2
Signed:

NORTH CAROLINA PROFESSIONAL ENGINEERING SEAL 019681 JACK D. BRIDGER

NO.	REVISIONS	BY	DATE
14	REV. EMERGENCY GATE SYMBOL & FENCE LOCATION	BDR	12/05/12
9	REVISE EMERGENCY ACCESS DRIVEWAY LOCATION	BDR	07/20/12
8	REVISE EMERGENCY ACCESS APRON WIDTH TO 20'	BDR	07/05/12
6	SEE REVISION SUMMARY ON SHEET G1.0	BDR	05/18/12
4	SEE REVISION SUMMARY ON SHEET G1.0	BDR	04/02/12

THOMAS & HUTTON
Engineering | Surveying | Planning | GIS | Consulting
215 South Kerr Avenue • Unit B
Wilmington, NC 28403 • 910.332.3360
www.thomasandhutton.com
Savannah, GA | Brunswick, GA | Charleston, SC | Myrtle Beach, SC

FLOURNOY DEVELOPMENT COMPANY
NEW HANOVER COUNTY, NC

AMBERLEIGH SHORES

LAYOUT - STAKING- SIGNAGE PLAN

JOB NO:	J-22667
DATE:	11/15/11
DRAWN:	BDR
DESIGNED:	BDR
REVIEWED:	JDR
APPROVED:	JDR
SCALE:	1" = 20'

C1.9

I. GENERAL NOTES

1. STABILIZATION MEASURES SHALL BE INITIATED AS SOON AS PRACTICABLE IN PORTIONS OF THE SITE WHERE CONSTRUCTION ACTIVITIES HAVE TEMPORARILY OR PERMANENTLY CEASED, BUT IN CASE MORE THAN FOURTEEN (14) DAYS AFTER WORK HAS CEASED, UNLESS ACTIVITY IN THAT PORTION OF THE SITE WILL RESUME WITHIN TWENTY-ONE (21) DAYS.
2. ALL SEDIMENT AND EROSION CONTROL DEVICES SHALL BE INSPECTED EVERY SEVEN (7) DAYS OR AFTER EACH RAINFALL OCCURRENCE THAT EXCEEDS ONE-HALF (0.5) INCH. DAMAGED OR INEFFECTIVE DEVICES SHALL BE REPAIRED OR REPLACED, AS NECESSARY.
3. PROVIDE SILT FENCE AND/OR OTHER CONTROL DEVICES, AS MAY BE REQUIRED, TO CONTROL SOIL EROSION DURING UTILITY CONSTRUCTION. ALL DISTURBED AREAS SHALL BE CLEANED, GRADED AND STABILIZED WITH GRASSING IMMEDIATELY AFTER THE UTILITY INSTALLATION.
4. ALL EROSION CONTROL DEVICES SHALL BE PROPERLY MAINTAINED DURING ALL PHASES OF CONSTRUCTION UNTIL THE COMPLETION OF ALL CONSTRUCTION ACTIVITIES AND ALL DISTURBED AREAS HAVE BEEN STABILIZED. ADDITIONAL CONTROL DEVICES MAY BE REQUIRED DURING CONSTRUCTION IN ORDER TO CONTROL EROSION AND/OR OFFSITE SEDIMENTATION. ALL TEMPORARY CONTROL DEVICES SHALL BE REMOVED ONCE CONSTRUCTION IS COMPLETE AND THE SITE IS STABILIZED.
5. THE CONTRACTOR MUST TAKE NECESSARY ACTION TO MINIMIZE THE TRACKING OF MUD ONTO THE PAVED ROADWAY FROM CONSTRUCTION AREAS. THE CONTRACTOR SHALL DAILY REMOVE MUD/SOIL FROM PAVEMENT AS MAY BE REQUIRED.
6. THE FOLLOWING NOTES ARE SPECIFIED BY THE NORTH CAROLINA DEPARTMENT OF ENVIRONMENT AND NATURAL RESOURCES (DENR) AND ARE TO BE EXECUTED BY THE CONTRACTOR.
   A. ALL SEDIMENT CONTROL MEASURES SHALL BE INSPECTED AT LEAST ONCE EVERY SEVEN CALENDAR DAYS AND AFTER ANY STORM EVENT OF GREATER THAN 0.5 INCHES OF PRECIPITATION DURING ANY 24-YEAR PERIOD. ALL SEDIMENT CONTROL FEATURES SHALL BE MAINTAINED UNTIL FINAL STABILIZATION HAS BEEN OBTAINED.
   B. STABILIZATION MEASURES SHALL BE INITIATED AS SOON AS PRACTICABLE IN PORTIONS OF THE SITE WHERE CONSTRUCTION ACTIVITIES HAVE TEMPORARILY OR PERMANENTLY CEASED, BUT IN NO CASE MORE THAN 14 DAYS AFTER THE CONSTRUCTION ACTIVITY IN THAT PORTION OF THE SITE HAS TEMPORARILY OR PERMANENTLY CEASED, UNLESS ACTIVITY IN THAT PORTION OF THE SITE WILL RESUME WITHIN 21 DAYS.
7. ADDITIONAL MEASURES TO CONTROL EROSION AND SEDIMENT MAY BE REQUIRED BY THE CITY, PROJECT ENGINEER AND/OR NCDENR.
8. ANY GRADING BEYOND WHAT IS DEPICTED IN THE APPROVED AND PERMITTED PLANS IS A VIOLATION OF THE STATE'S EROSION CONTROL AND GRADING REQUIREMENTS AND MAY BE SUBJECT TO A FINE. THE CONTRACTOR SHALL BE RESPONSIBLE FOR PAYMENT OF ALL FINES DUE TO VIOLATIONS.
9. GRADING MORE THAN ONE ACRE WITHOUT AN APPROVED EROSION CONTROL PLAN IS A VIOLATION OF SEDIMENT POLLUTION CONTROL ACT AND MAY BE SUBJECT TO A FINE.
10. ALL OFF SITE BORROW MUST COME FROM A STATE APPROVED SOURCE. CONTRACTOR TO SUBMIT WRITTEN DOCUMENTATION IDENTIFYING SOURCE.
11. ALL SURPLUS MATERIAL AND DEMOLITION DEBRIS SHALL BE HAULED OFF SITE TO AN APPROVED WASTE SITE. CONTRACTOR TO SUBMIT WRITTEN DOCUMENTATION IDENTIFYING APPROVED WASTE SITE.

NOTES:

1. ALL SLOPES EXCEEDING 6:1 OR GREATER SHALL BE STABILIZED WITH EROSION CONTROL MATTING. CONTRACTOR RESPONSIBLE FOR MAINTENANCE, REPAIR AND/OR REPLACEMENT OF ALL EROSION CONTROL MEASURES AS REQUIRED THROUGHOUT CONSTRUCTION.
2. ALL TREES WITHIN DISTURBANCE LIMITS ARE TO BE REMOVED UNLESS OTHERWISE NOTED.

II. CONSTRUCTION SEQUENCE

1. INSTALL GRAVEL CONSTRUCTION EXIT, SILT FENCING, TREE PROTECTION & TEMPORARY DITCH CROSSING.
2. CLEARING AND GRUBBING.
3. CONSTRUCT SEDIMENT BASIN & TRAPS.
4. INSTALL DITCH RE-ROUTE PIPE.
5. INSTALL TEMPORARY DITCH PLUG & FILL DITCH (DRY WEATHER ONLY).
6. INSTALL REMAINING DRAINAGE CONVEYANCES & EROSION CONTROL.
7. ROUGH GRADING & SITE INFRASTRUCTURE.
8. BEGIN BUILDING CONSTRUCTION CONCURRENTLY WITH PARKING LOT CONSTRUCTION.
9. PAVING. INSTALL SILT SACKS ON INLETS WITHIN PAVED AREAS ONCE STONE BASE IS IN PLACE.
10. FINAL GRADING, GRASSING & STABILIZATION. CONVERT SEDIMENT BASIN TO INFILTRATION BASIN. RESTORE ALL DRAINAGE CONVEYANCES TO DESIGN SPECIFICATIONS UPON PROJECT COMPLETION & STABILIZATION.

III. MAINTENANCE PLAN

1. ALL EROSION AND SEDIMENT CONTROL PRACTICES WILL BE CHECKED FOR STABILITY AND OPERATION FOLLOWING EVERY RUNOFF-PRODUCING RAINFALL, BUT IN NO CASE, LESS THAN ONCE EVERY WEEK. ANY NEEDED REPAIRS WILL BE MADE IMMEDIATELY TO MAINTAIN ALL PRACTICES AS DESIGNED.
2. ALL CONSTRUCTION ENTRANCES WILL BE PERIODICALLY TOP-DRESSED WITH AN ADDITIONAL TWO (2) INCHES OF #4 STONE TO MAINTAIN PROPER DEPTH. ANY SEDIMENT THAT IS TRACKED INTO THE STREET WILL BE IMMEDIATELY REMOVED.
3. SEDIMENT WILL BE REMOVED FROM THE SEDIMENT TRAPS AND BASINS WHEN STORAGE CAPACITY HAS BEEN APPROXIMATELY 50% FILLED. GRAVEL WILL BE CLEANED OR REPLACED WHEN THE SEDIMENT POOL NO LONGER DRAINS PROPERLY.
4. SEDIMENT WILL BE REMOVED FROM BEHIND THE SEDIMENT FENCE WHEN IT BECOMES 0.5 FEET DEEP AT THE FENCE. THE SEDIMENT FENCE WILL BE REPAIRED AS NECESSARY TO MAINTAIN A BARRIER. SILT FENCE STAKES WILL BE SPACED 6 FEET APART UNLESS A WIRE BACKING IS USED WITH 8 FOOT STAKE SPACING.
5. ALL SEEDED AREAS WILL BE FERTILIZED, RESEEDED AS NECESSARY, AND MULCHED ACCORDING TO SPECIFICATIONS IN THE VEGETATIVE PLAN TO MAINTAIN A VIGOROUS, DENSE COVER.
6. SEDIMENT, STRAW, LIMBS OR OTHER DEBRIS WILL BE REMOVED FROM THE CHECK DAMS TO PREVENT CLOGGING. STONES WILL BE ADDED AS NECESSARY TO MAINTAIN DESIGN HEIGHT AND CROSS SECTION.
7. SILT SACKS MUST BE INSPECTED ONCE A WEEK AND AFTER EVERY RAINFALL. REMOVE SEDIMENT BUILD UP AFTER EACH INSPECTION OR AT THE INTERVAL SPECIFIED BY THE MANUFACTURER, WHICH EVER IS MORE RESTRICTIVE.

IV. STABILIZATION NOTES

NEW HANOVER COUNTY REQUIREMENTS - DENUDED AREAS WILL BE STABILIZED WITHIN 15 WORKING DAYS OF CEASE OF ANY PHASE OF ACTIVITY. ALL SLOPES WILL BE STABILIZED WITHIN 21 CALENDARS OF CEASE OF ANY PHASE OF ACTIVITY. THIS INCLUDES SLOPES, SWALES, STOCKPILES AND ANY OTHER UNSTABILIZED AREAS.

NPDES REQUIREMENTS - ALL DISTURBED AREAS WILL BE STABILIZED WITHIN THE TIMEFRAME SPECIFIED BELOW:
- PERIMETER DIKES, SWALES, DITCHES & SLOPES - 7 DAYS OF LAST LAND DISTURBING ACTIVITY.
- SLOPES STEEPER THAN 3:1 - WITHIN 7 DAYS OF LAST LAND DISTURBING ACTIVITY.
- ALL OTHER DENUDED AREAS - WITHIN 14 DAYS OF LAST LAND DISTURBING ACTIVITY.

V. INSPECTIONS

QUALIFIED PERSONNEL (PROVIDED BY THE DISCHARGER) WILL INSPECT DISTURBED AREAS OF THE CONSTRUCTION SITE, AREAS USED FOR STORAGE OF MATERIALS THAT ARE EXPOSED TO PRECIPITATION THAT HAVE NOT BEEN FINALLY STABILIZED, STRUCTURAL CONTROL MEASURES, AND LOCATIONS WHERE VEHICLES ENTER OR EXIT THE SITE AT LEAST ONCE EVERY SEVEN CALENDAR DAYS AND WITHIN 24 HOURS OF THE END OF A STORM THAT IS 0.5 INCHES OR GREATER. WHERE SITES HAVE BEEN FINALLY STABILIZED SUCH INSPECTIONS SHALL BE CONDUCTED AT LEAST ONCE EVERY MONTH.

DISTURBED AREAS AND AREAS USED FOR STORAGE OF MATERIALS THAT ARE EXPOSED TO PRECIPITATION SHALL BE INSPECTED FOR EVIDENCE OF, OR THE POTENTIAL FOR, POLLUTANTS ENTERING THE DRAINAGE SYSTEM. EROSION AND SEDIMENT CONTROL MEASURES IDENTIFIED IN THE PLAN SHALL BE OBSERVED TO ENSURE THAT THEY ARE OPERATING CORRECTLY. WHERE DISCHARGE LOCATIONS OR POINTS ARE ACCESSIBLE, THEY SHALL BE INSPECTED TO ASCERTAIN WHETHER EROSION CONTROL MEASURES ARE EFFECTIVE IN PREVENTING SIGNIFICANT IMPACTS TO RECEIVING WATERS. LOCATIONS WHERE VEHICLES ENTER OR EXIT THE SITE SHALL BE INSPECTED FOR EVIDENCE OF OFFSITE SEDIMENT TRACKING.

BASED ON THE RESULTS OF THE INSPECTION, THE SITE DESCRIPTION IDENTIFIED IN THE PLAN IN ACCORDANCE WITH PARAGRAPH IV.D.1. OF THE NORTH CAROLINA DEPARTMENT OF ENVIRONMENT, AND NATURAL RESOURCES NPDES GENERAL PERMIT FOR STORM WATER DISCHARGES FROM CONSTRUCTION ACTIVITIES THAT ARE CLASSIFIED AS "ASSOCIATED WITH INDUSTRIAL ACTIVITY" BY EPA REGULATION, HEREINAFTER REFERRED TO AS THE NPDES PERMIT, POLLUTION PREVENTION MEASURES IDENTIFIED IN THE PLAN IN ACCORDANCE WITH PARAGRAPH IV.D.2 OF THE NPDES PERMIT SHALL BE REVISED AS APPROPRIATE, BUT IN NO CASE LATER THAN 7 CALENDAR DAYS FOLLOWING THE INSPECTION. SUCH MODIFICATIONS SHALL PROVIDE FOR TIMELY IMPLEMENTATION OF ANY CHARGES TO THE PLAN WITHIN 7 CALENDAR DAYS FOLLOWING THE INSPECTION.

A REPORT SUMMARIZING THE SCOPE OF THE INSPECTION, NAME(S) AND QUALIFICATIONS OF PERSONNEL MAKING THE INSPECTION, THE DATE(S) OF THE INSPECTION, MAJOR OBSERVATIONS RELATING TO THE IMPLEMENTATION OF THE STORM WATER POLLUTION PREVENTION PLAN, AND ACTIONS TAKEN IN ACCORDANCE WITH PARAGRAPH IV.D.4.B OF THE NPDES PERMIT SHALL BE MADE AND RETAINED AS PART OF THE STORM WATER POLLUTION PREVENTION PLAN FOR AT LEAST THREE YEARS FROM THE DATE THE SITE IS FINALLY STABILIZED. SUCH REPORTS SHALL IDENTIFY ANY INCIDENTS OF NONCOMPLIANCE WHERE A REPORT DOES NOT IDENTIFY ANY INCIDENTS OF NON-COMPLIANCE. WHERE A REPORT DOES NOT IDENTIFY ANY INCIDENTS OF NONCOMPLIANCE, THE REPORT SHALL CONTAIN A CERTIFICATION THAT THE FACILITY IS IN COMPLIANCE WITH THE STORMWATER POLLUTION PREVENTION PLAN AND THE NPDES PERMIT REFERENCED ABOVE. THE REPORT SHALL BE SIGNED IN ACCORDANCE WITH PART VI.G. OF THE NPDES PERMIT.

5. LONG TERM MAINTENANCE OF DRAINAGE AND STORMWATER MANAGEMENT SYSTEM

THE DRAINAGE SYSTEM WILL BE OWNED AND MAINTAINED BY OWNER AFTER CONSTRUCTION IS COMPLETE.

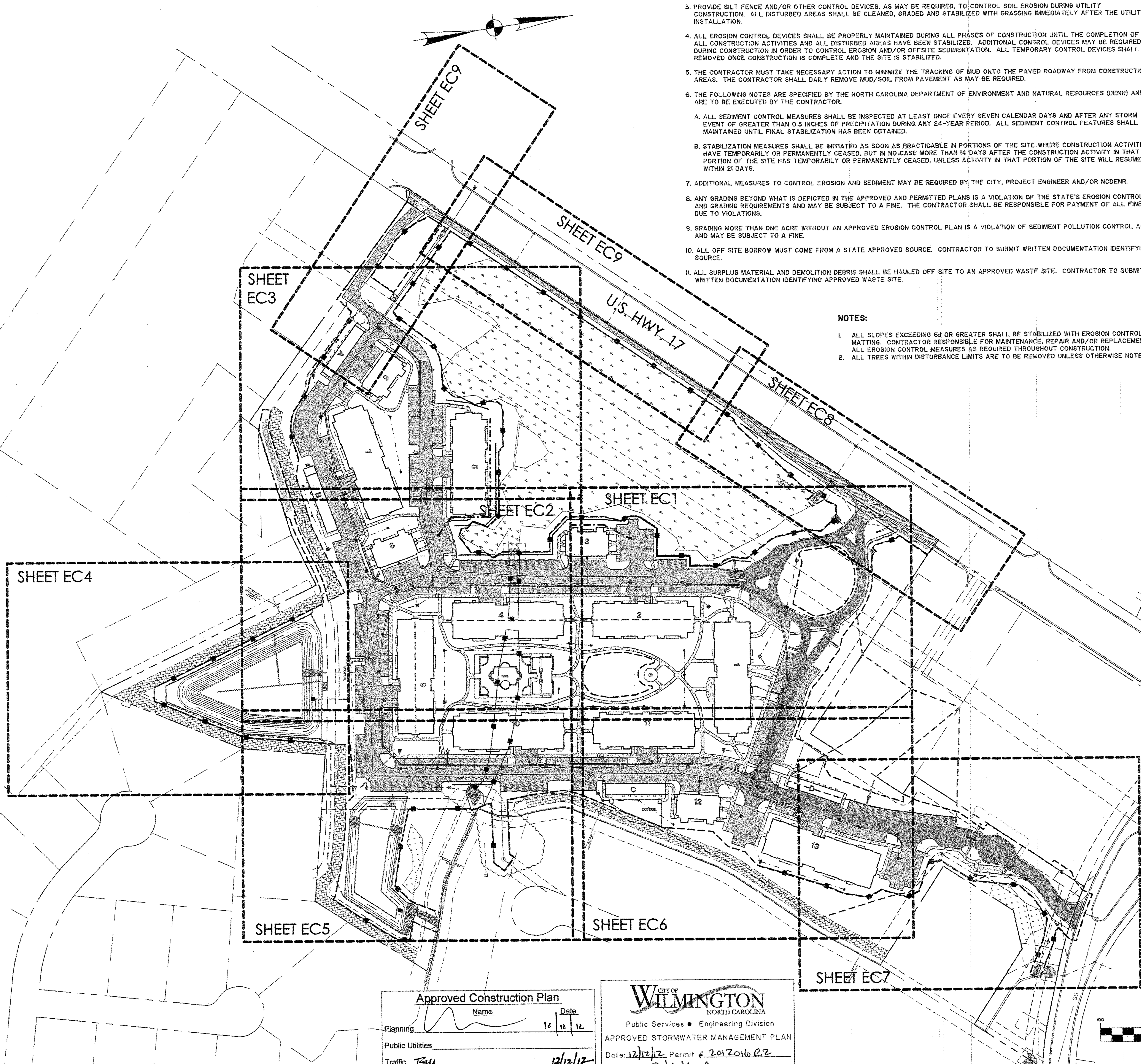

RECEIVED
DEC 11 2012
PLANNING DIVISION

EROSION CONTROL LEGEND

DESCRIPTION	PLAN SYMBOL
SILT FENCE	
LIMITS OF DISTURBANCE - 17.6 ACRES TOTAL	
LAND GRADING	
TEMPORARY GRAVEL CONSTRUCTION ENTRANCE/EXIT	
TEMPORARY SEEDING	TS
PERMANENT SEEDING	PS
RIPRAP	RR
OUTLET STABILIZATION STRUCTURE	
HARDWARE CLOTH & GRAVEL INLET PROTECTION. INSTALL SILT SACKS ON INLETS IN PAVED AREAS ONCE STONE BASE IS IN PLACE	
ROCK PIPE INLET PROTECTION	
SKIMMER SEDIMENT BASIN	
TEMPORARY SEDIMENT TRAP	
SEDIMENT BASIN/TRAP DRAINAGE LIMITS	

North Carolina
One Call Center
Call Before You Dig
"It's The Law"
1-800-632-4949

GRAPHIC SCALE
100 0 50 100 200 400
(IN FEET)
1 inch = 100 ft.

Approved Construction Plan

	Name	Date
Planning	[signature]	12/12/12
Public Utilities		
Traffic	TBM	12/12/12
Fire	[signature]	12/13/12

CITY OF WILMINGTON
NORTH CAROLINA
Public Services • Engineering Division
APPROVED STORMWATER MANAGEMENT PLAN
Date: 12/12/12 Permit # 2012016R2
Signed: [signature]

NORTH CAROLINA THOMAS & HUTTON ENGINEERING CO. No. F-0871 CERTIFICATE OF AUTHORIZATION

NORTH CAROLINA PROFESSIONAL ENGINEER 28179 JACK D. REEL 12/05/12

NO.	REVISIONS	BY	DATE
14	SEE REVISION SUMMARY ON SHEET G1.0	BDR	12/05/12
13	REVISE CLEARING & SILT FENCE LIMITS FOR STORM PIPE	BDR	09/13/12
12	ADD PREVIOUS REVISION NOTES	BDR	08/27/12
11	SEE REVISION SUMMARY ON SHEET G1.0	BDR	08/07/12
10	SEE REVISION SUMMARY ON SHEET G1.0	BDR	07/24/12
9	REVISE EMERGENCY ACCESS DRIVEWAY LOCATION	BDR	07/20/12
6	SEE REVISION SUMMARY ON SHEET G1.0	BDR	05/18/12
4	SEE REVISION SUMMARY ON SHEET G1.0	BDR	04/23/12
1	SEE REVISION SUMMARY ON SHEET G1.0	BDR	01/25/12

THOMAS & HUTTON
Engineering | Surveying | Planning | GIS | Consulting
215 South Kerr Avenue • Unit B
Wilmington, NC 28403 • 910.332.3360
www.thomasandhutton.com
Savannah, GA | Brunswick, GA | Charleston, SC | Myrtle Beach, SC

FLOURNOY DEVELOPMENT COMPANY
NEW HANOVER COUNTY, NC
AMBERLEIGH SHORES
EROSION CONTROL OVERALL

JOB NO:	J-22667
DATE:	11/15/11
DRAWN:	BDR
DESIGNED:	BDR
REVIEWED:	JDR
APPROVED:	JDR
SCALE:	1" = 100'

EC.0

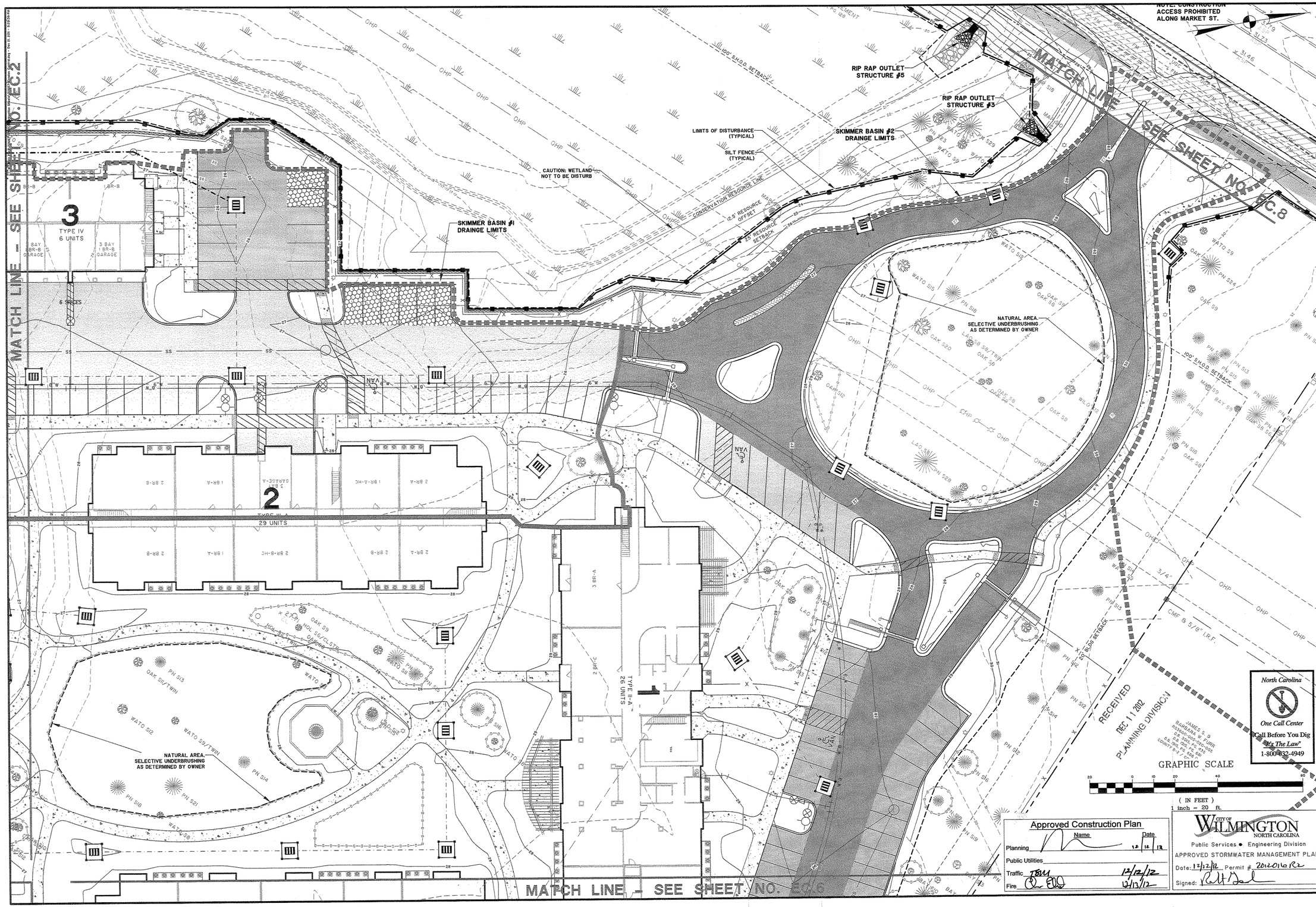

Approved Construction Plan

	Name	Date
Planning		12 12 12
Public Utilities		
Traffic	JBM	12/12/12
Fire		12/12/12

CITY OF WILMINGTON NORTH CAROLINA
Public Services • Engineering Division
APPROVED STORMWATER MANAGEMENT PLAN
Date: 12/12/12 Permit # 2012-016 R2
Signed:

THOMAS & HUTTON
Engineering | Surveying | Planning | GIS | Consulting
215 South Kerr Avenue • Unit B
Wilmington, NC 28403 • 910.332.3360
www.thomasandhutton.com
Savannah, GA | Brunswick, GA | Charleston, SC | Myrtle Beach, SC

NORTH CAROLINA PROFESSIONAL SEAL 019293 ENGINEER JACK D. ROBERTS 8/27/12

NO.	REVISIONS	BY	DATE
12	ADD PREVIOUS REVISION NOTES	BDR	08/27/12
11	CHANGE 2 PARKING SPACES TO PERVIOUS AT BLDG 3	BDR	08/07/12
10	SEE REVISION SUMMARY ON SHEET GL0	BDR	07/24/12
4	SEE REVISION SUMMARY ON SHEET GL0	BDR	04/23/12
1	SEE REVISION SUMMARY ON SHEET GL0	BDR	01/25/12

FLOURNOY DEVELOPMENT COMPANY

NEW HANOVER COUNTY, NC

AMBERLEIGH SHORES

EROSION CONTROL PLAN

JOB NO:	J-22667
DATE:	8/15/11
DRAWN:	BDR
DESIGNED:	BDR
REVIEWED:	JDR
APPROVED:	JDR
SCALE:	1" = 20'

EC.1

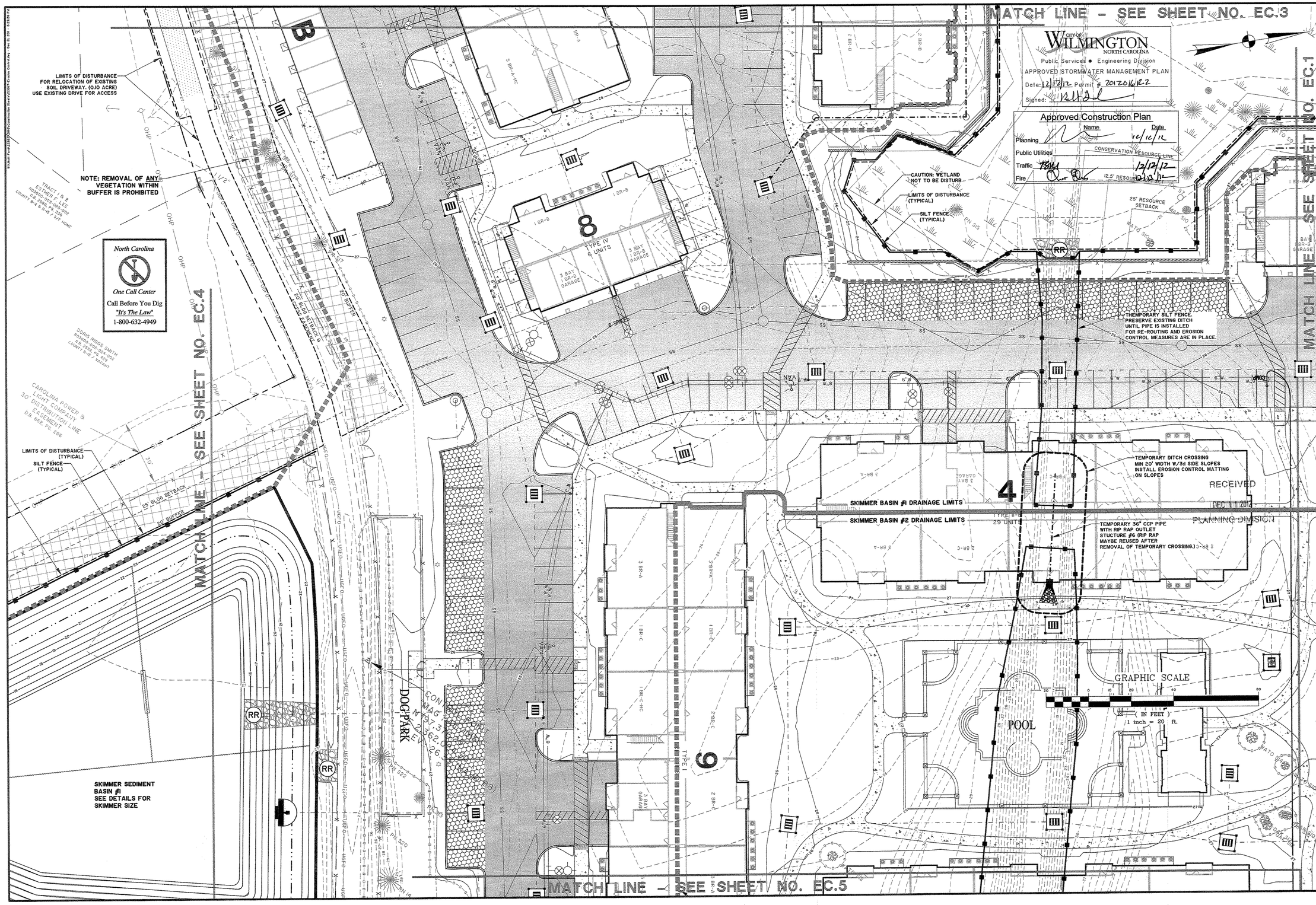

NORTH CAROLINA PROFESSIONAL SEAL THOMAS & HUTTON ENGINEERING CO. No. F-0871 CERTIFICATE OF AUTHORIZATION

NORTH CAROLINA PROFESSIONAL SEAL 28179 JACK D. FEBRUARY 8/23/12

NO.	REVISIONS	BY	DATE
12	ADD PREVIOUS REVISION NOTES	BDR	08/27/12
10	SEE REVISION SUMMARY ON SHEET SLO	BDR	07/24/12
6	SEE REVISION SUMMARY ON SHEET SLO	BDR	05/18/12
4	SEE REVISION SUMMARY ON SHEET SLO	BDR	04/23/12
1	SEE REVISION SUMMARY ON SHEET SLO	BDR	01/25/12

THOMAS & HUTTON
Engineering | Surveying | Planning | GIS | Consulting
215 South Kerr Avenue • Unit B
Wilmington, NC 28403 • 910.332.3360
www.thomasandhutton.com
Savannah, GA | Brunswick, GA | Charleston, SC | Myrtle Beach, SC

FLOURNOY DEVELOPMENT COMPANY
NEW HANOVER COUNTY, NC

AMBERLEIGH SHORES

EROSION CONTROL PLAN

JOB NO:	J-22867
DATE:	11/15/11
DRAWN:	BDR
DESIGNED:	BDR
REVIEWED:	JDR
APPROVED:	JDR
SCALE:	1" = 20'

EC.2

NO.	REVISIONS	BY	DATE
14	REV. EMERGENCY GATE SYMBOL & FENCE LOCATION	BDR	12/05/12
12	ADD PREVIOUS REVISION NOTES	BDR	08/27/12
10	SEE REVISION SUMMARY ON SHEET G1.0	BDR	07/24/12
6	SEE REVISION SUMMARY ON SHEET G1.0	BDR	05/18/12
4	SEE REVISION SUMMARY ON SHEET G1.0	BDR	04/23/12
1	SEE REVISION SUMMARY ON SHEET G1.0	BDR	01/25/12

NORTH CAROLINA PROFESSIONAL ENGINEER JACK D. REEVES 12/05/12

THOMAS & HUTTON ENGINEERING CO. No. F-0871 CERTIFICATE OF AUTHORIZATION

THOMAS & HUTTON
Engineering | Surveying | Planning | GIS | Consulting
215 South Kerr Avenue • Unit B
Wilmington, NC 28403 • 910.332.3360
www.thomasandhutton.com
Savannah, GA | Brunswick, GA | Charleston, SC | Myrtle Beach, SC

FLOURNOY DEVELOPMENT COMPANY

NEW HANOVER COUNTY, NC

AMBERLEIGH SHORES

EROSION CONTROL PLAN

JOB NO:	J-22667
DATE:	11/15/11
DRAWN:	BDR
DESIGNED:	BDR
REVIEWED:	JDR
APPROVED:	JDR
SCALE:	########

EC.3

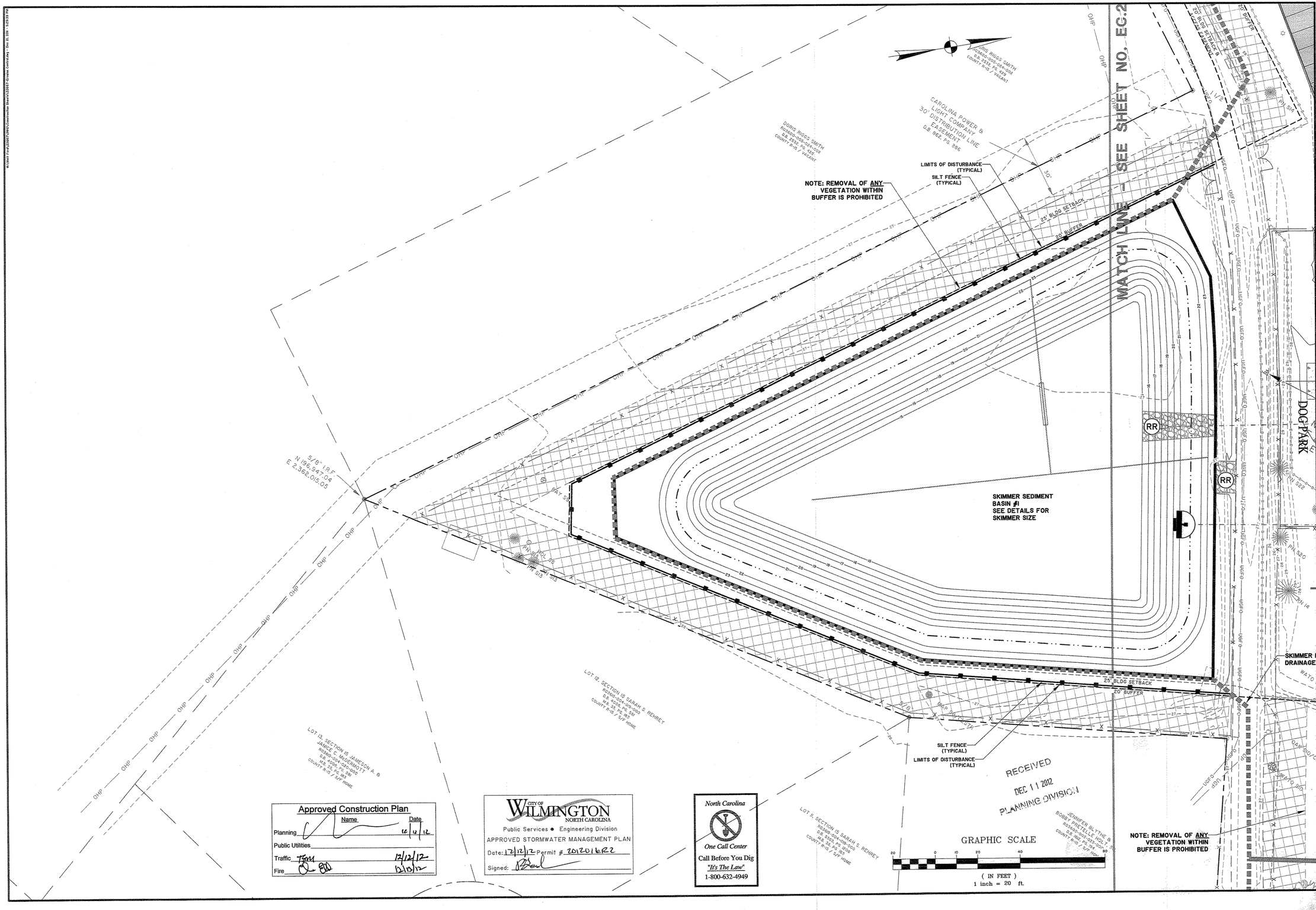

Approved Construction Plan

	Name	Date
Planning		12/12/12
Public Utilities		
Traffic	TJM	12/12/12
Fire		12/10/12

CITY OF WILMINGTON NORTH CAROLINA
Public Services • Engineering Division
APPROVED STORMWATER MANAGEMENT PLAN
Date: 12/12/12 Permit # 2012016R2
Signed:

North Carolina One Call Center
Call Before You Dig
"It's The Law"
1-800-632-4949

NORTH CAROLINA PROFESSIONAL SEAL 8/27/12 JACK D. REDFORD, JR. SUPERVISOR

NORTH CAROLINA THOMAS & HUTTON ENGINEERING CO. No. F-0871 CERTIFICATE OF AUTHORITY

NO.	BY	DATE
12	BDR	08/27/12
6	BDR	05/18/12
4	BDR	04/23/12
1	BDR	01/25/12

REVISIONS

12 ADD PREVIOUS REVISION NOTES
6 SEE REVISION SUMMARY ON SHEET G1.0
4 SEE REVISION SUMMARY ON SHEET G1.0
1 SEE REVISION SUMMARY ON SHEET G1.0

THOMAS & HUTTON
Engineering | Surveying | Planning | GIS | Consulting
215 South Kerr Avenue • Unit B
Wilmington, NC 28403 • 910.392.3360
www.thomasandhutton.com
Savannah, GA | Brunswick, GA | Charleston, SC | Myrtle Beach, SC

FLOURNOY DEVELOPMENT COMPANY

NEW HANOVER COUNTY, NC

AMBERLEIGH SHORES

EROSION CONTROL PLAN

JOB NO:	J-22667
DATE:	11/15/11
DRAWN:	BDR
DESIGNED:	BDR
REVIEWED:	JDR
APPROVED:	JDR
SCALE:	1" = 20'

EC.4

MATCH LINE - SEE SHEET NO. EC.2

MATCH LINE - SEE SHEET NO. EC.6

SKIMMER BASIN #1 DRAINAGE LIMITS

SKIMMER BASIN #2 DRAINAGE LIMITS

TYPE II
23 UNITS

TEMPORARY DITCH PLUG (SEE DETAIL). INSTALL ONCE PIPE FOR RE-ROUTING IS COMPLETE AND EROSION CONTROL MEASURES ARE IN PLACE.
NOTE: SCHEDULE INSTALLATION OF PLUG & FILLING OF DITCH SUCH THAT IT CAN BE COMPLETED PRIOR TO ANY RAIN EVENT.

THEMPORARY SILT FENCE. PRESERVE EXISTING DITCH UNTIL PIPE IS INSTALLED FOR RE-ROUTING AND EROSION CONTROL MEASURES ARE IN PLACE.

25' BLDG SETBACK
20' BUFFER

SILT FENCE (TYPICAL)
LIMITS OF DISTURBANCE (TYPICAL)

NOTE: REMOVAL OF ANY VEGETATION WITHIN BUFFER IS PROHIBITED

RIP RAP OUTLET STRUCTURE #1

LIMITS OF DISTURBANCE (TYPICAL)
SILT FENCE (TYPICAL)

SKIMMER SEDIMENT BASIN #2
SEE DETAILS FOR SKIMMER SIZE

CAUTION: WETLAND NOT TO BE DISTURBED

50' STREAM SETBACK
25' BLDG SETBACK
50' DRAINAGE EASEMENT

NOTE: REMOVAL OF ANY VEGETATION WITHIN BUFFER IS PROHIBITED

INSTALL JUTE NET WITH PERMANENT STABILIZATION IMMEDIATELY AFTER INSTALLATION.

STABILIZE WITH SOD (MATCH EXISTING TYPE)

RIP RAP OUTLET STRUCTURE #2

MARYMOUNT DRIVE
SR-2764
PUBLIC R/W
(WIDTH VARIES)

COMMON AREA
MARYMOUNT TOWNHOMES HOA, INC., et al
ROBERT-JOE-SLOAN
B.B. 9001, P.P. 1810
B.B. 9001, P.P. 1827
County R-15

JAMES S. & PATRICIA L. MANGUM
ROBERT-JOE-SLOAN
B.B. 9471, P.P. 1380
B.B. 9471, P.P. 1836
COUNTY R-15 / S.F. HOME

RECEIVED
DEC 11 2012
PLANNING DIVISION

Approved Construction Plan

	Name	Date
Planning		12/12/12
Public Utilities		
Traffic	TBM	12/12/12
Fire		12/13/12

CITY OF WILMINGTON NORTH CAROLINA
Public Services • Engineering Division
APPROVED STORMWATER MANAGEMENT PLAN
Date: 12/12/12 Permit # 20120162
Signed:

North Carolina
One Call Center
Call Before You Dig
"It's The Law"
1-800-632-4949

GRAPHIC SCALE
(IN FEET)
1 inch = 20 ft.

NORTH CAROLINA PROFESSIONAL SEAL
THOMAS & HUTTON ENGINEERING
CERTIFICATE OF AUTHORIZATION No. F-0871
NORTH CAROLINA PROFESSIONAL SEAL 019
JACK D. HUTTON III

NO.	REVISIONS	BY	DATE
14	SEE REVISION SUMMARY ON SHEET G.0	BDR	12/05/12
12	ADD PREVIOUS REVISION NO 7,8	BDR	09/27/12
6	SEE REVISION SUMMARY ON SHEET G.0	BDR	05/18/12
4	SEE REVISION SUMMARY ON SHEET G.0	BDR	04/23/12
1	SEE REVISION SUMMARY ON SHEET G.0	BDR	01/25/12

THOMAS & HUTTON
Engineering | Surveying | Planning | GIS | Consulting
215 South Kerr Avenue • Unit B
Wilmington, NC 28403 • 910.332.3360
www.thomasandhutton.com
Savannah, GA | Brunswick, GA | Charleston, SC | Myrtle Beach, SC

FLOURNOY DEVELOPMENT COMPANY

NEW HANOVER COUNTY, NC

AMBERLEIGH SHORES

EROSION CONTROL PLAN

JOB NO:	J-22667
DATE:	8/15/11
DRAWN:	BDR
DESIGNED:	BDR
REVIEWED:	JDR
APPROVED:	JDR
SCALE:	1" = 20'

EC.5

MATCH LINE - SEE SHEET NO. EC.1

MATCH LINE - SEE SHEET NO. EC.5

MATCH LINE - SEE SHEET NO. EC.7

11
TYPE III
29 UNITS

12
TYPE IV
6 UNITS

13
TYPE I-A
28 UNITS

C

D

DOG PARK

PLAY

SKIMMER BASIN #2
DRAINAGE LIMITS

NOTE: REMOVAL OF ANY VEGETATION WITHIN BUFFER IS PROHIBITED

NATURAL AREA
SELECTIVE UNDERBRUSHING
AS DETERMINED BY OWNER

20' BUFFER

25' BLDG SETBACK

SILT FENCE
(TYPICAL)

LIMITS OF DISTURBANCE
(TYPICAL)

TEMPORARY SEDIMENT
TRAP #1 DRAINAGE
LIMITS

TEMPORARY SEDIMENT
TRAP #2 DRAINAGE
LIMITS

TEMPORARY SEDIMENT
TRAP #1

TEMPORARY SEDIMENT
TRAP #2

RECEIVED
DEC 11 2012
PLANNING DIVISION

MARYMOUNT DRIVE
SR-2764
PUBLIC R/W
(WIDTH VARIES)

Approved Construction Plan

	Name	Date
Planning		12/12/12
Public Utilities		
Traffic		12/12/12
Fire		12/13/12

CITY OF WILMINGTON NORTH CAROLINA
Public Services • Engineering Division
APPROVED STORMWATER MANAGEMENT PLAN
Date: 12/12/12 Permit # 20120612 2
Signed:

North Carolina
One Call Center
Call Before You Dig
"It's The Law"
1-800-632-4949

GRAPHIC SCALE
20 0 10 20 40 80
(IN FEET)
1 inch = 20 ft.

NORTH CAROLINA PROFESSIONAL SEAL 9/27/12 THOMAS & HUTTON ENGINEERING CO. No. F-0891 CERTIFICATE OF AUTHORIZATION

NORTH CAROLINA PROFESSIONAL SEAL 9/27/12 ENGINEER JACK D. RIES

NO.	REVISIONS	BY	DATE
12	ADD PREVIOUS REVISION NOTES	BDR	08/27/12
6	SEE REVISION SUMMARY ON SHEET 6.0	BDR	06/19/12
4	SEE REVISION SUMMARY ON SHEET 6.0	BDR	04/23/12
1	SEE REVISION SUMMARY ON SHEET 6.0	BDR	02/29/12

THOMAS & HUTTON
Engineering | Surveying | Planning | GIS | Consulting
215 South Kerr Avenue • Unit B
Wilmington, NC 28403 • 910.332.3360
www.thomasandhutton.com
Savannah, GA | Brunswick, GA | Charleston, SC | Myrtle Beach, SC

FLOURNOY DEVELOPMENT COMPANY
NEW HANOVER COUNTY, NC

AMBERLEIGH SHORES

EROSION CONTROL PLAN

JOB NO:	J-22667
DATE:	11/15/11
DRAWN:	BDR
DESIGNED:	BDR
REVIEWED:	JDR
APPROVED:	JDR
SCALE:	1" = 20'

EC.6

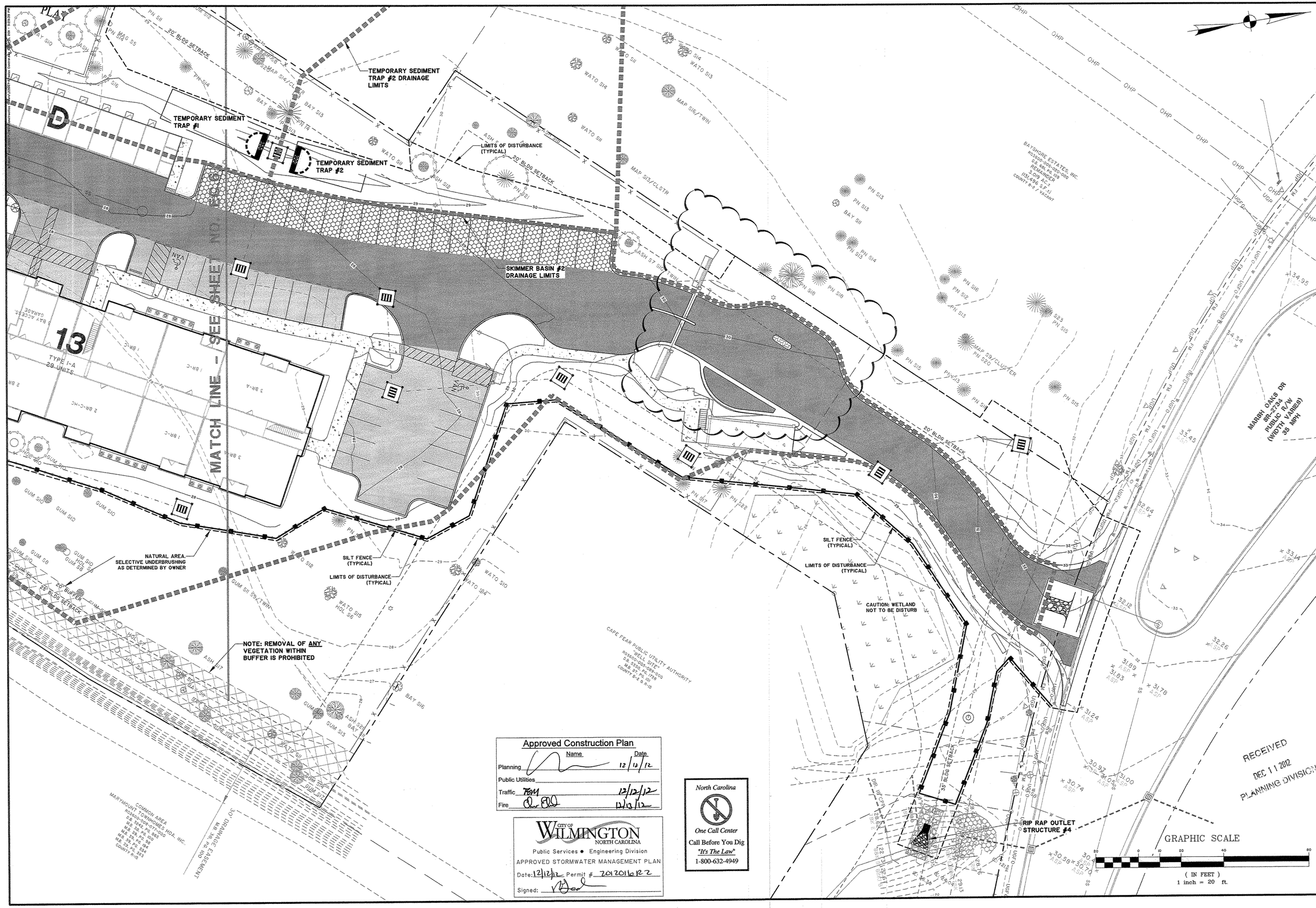

Approved Construction Plan

	Name	Date
Planning		12/12/12
Public Utilities		
Traffic	TGM	12/12/12
Fire		12/12/12

CITY OF WILMINGTON NORTH CAROLINA
Public Services • Engineering Division
APPROVED STORMWATER MANAGEMENT PLAN
Date: 12/12/12 Permit # 20120162 2
Signed:

North Carolina
One Call Center
Call Before You Dig
"It's The Law"
1-800-632-4949

RECEIVED
DEC 11 2012
PLANNING DIVISION

NORTH CAROLINA PROFESSIONAL SEAL ENGINEERING
THOMAS & HUTTON ENGINEERING CO. No. F-0887
CERTIFICATE OF AUTHORIZATION
12/05/12
JACK D. JR. JOHNSON

NO.	REVISIONS	BY	DATE
14	SEE REVISION SUMMARY ON SHEET 0.0	BDR	12/05/12
13	REVISE CLEARING & SILT FENCE LIMITS FOR STORM PIPE	BDR	09/13/12
12	ADD PREVIOUS REVISION NOTES	BDR	09/27/12
6	SEE REVISION SUMMARY ON SHEET 0.0	BDR	06/18/12
5	SEE REVISION SUMMARY ON SHEET 0.0	BDR	04/23/12
1	SEE REVISION SUMMARY ON SHEET 0.0	BDR	01/23/12

THOMAS & HUTTON
Engineering | Surveying | Planning | GIS | Consulting
215 South Kerr Avenue • Unit B
Wilmington, NC 28403 • 910.332.3360
www.thomasandhutton.com
Savannah, GA | Brunswick, GA | Charleston, SC | Myrtle Beach, SC

FLOURNOY DEVELOPMENT COMPANY
NEW HANOVER COUNTY, NC

AMBERLEIGH SHORES

EROSION CONTROL PLAN

JOB NO:	J-22667
DATE:	11/15/11
DRAWN:	BDR
DESIGNED:	BDR
REVIEWED:	JDR
APPROVED:	JDR
SCALE:	1" = 20'

EC.7

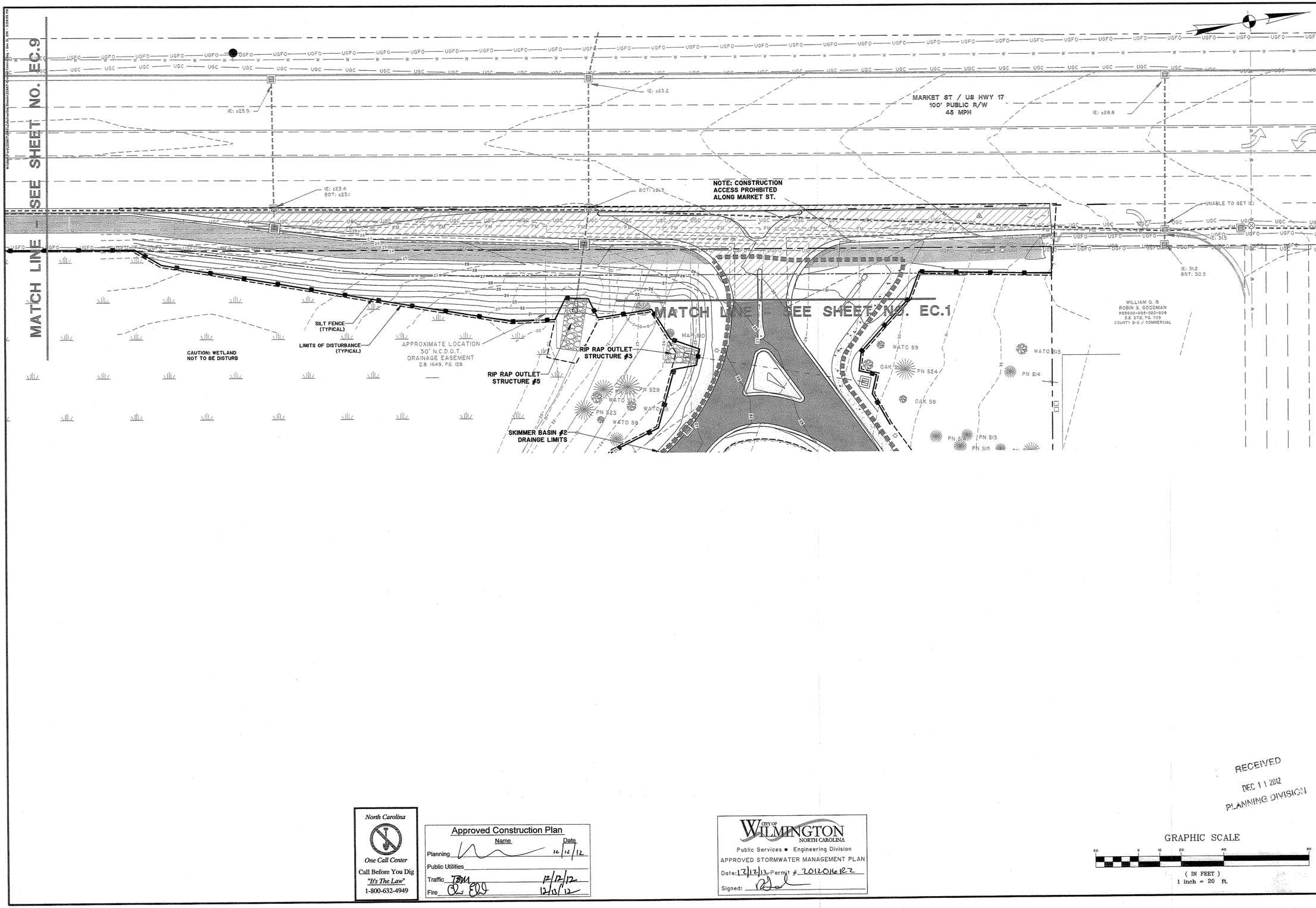

North Carolina
One Call Center
Call Before You Dig
"It's The Law"
1-800-632-4949

Approved Construction Plan

	Name	Date
Planning		12/12/12
Public Utilities		
Traffic	TBM	12/12/12
Fire		12/13/12

CITY OF WILMINGTON NORTH CAROLINA
Public Services • Engineering Division
APPROVED STORMWATER MANAGEMENT PLAN
Date: 12/12/12 Permit # 2012016R2
Signed:

RECEIVED
DEC 11 2012
PLANNING DIVISION

GRAPHIC SCALE
20 0 10 20 40 80
(IN FEET)
1 inch = 20 ft.

NORTH CAROLINA PROFESSIONAL ENGINEER SEAL 28179 JACK D. REEL
THOMAS & HUTTON ENGINEERING CO. No. F-0871 CERTIFICATE OF AUTHORIZATION

NO.	REVISIONS	BY	DATE
12	ADD PREVIOUS REVISION NOTES	BDR	08/27/12
6	SEE REVISION SUMMARY ON SHEET GI.0	BDR	05/18/12
4	SEE REVISION SUMMARY ON SHEET GI.0	BDR	04/23/12
1	SEE REVISION SUMMARY ON SHEET GI.0	BDR	01/25/12

THOMAS & HUTTON
Engineering | Surveying | Planning | GIS | Consulting
215 South Kerr Avenue • Unit B
Wilmington, NC 28403 • 910.332.3360
www.thomasandhutton.com
Savannah, GA | Brunswick, GA | Charleston, SC | Myrtle Beach, SC

FLOURNOY DEVELOPMENT COMPANY
NEW HANOVER COUNTY, NC

AMBERLEIGH SHORES

EROSION CONTROL PLAN

JOB NO:	J-22667
DATE:	11/15/11
DRAWN:	BDR
DESIGNED:	BDR
REVIEWED:	JDR
APPROVED:	JDR
SCALE:	1" = 20'

EC.8

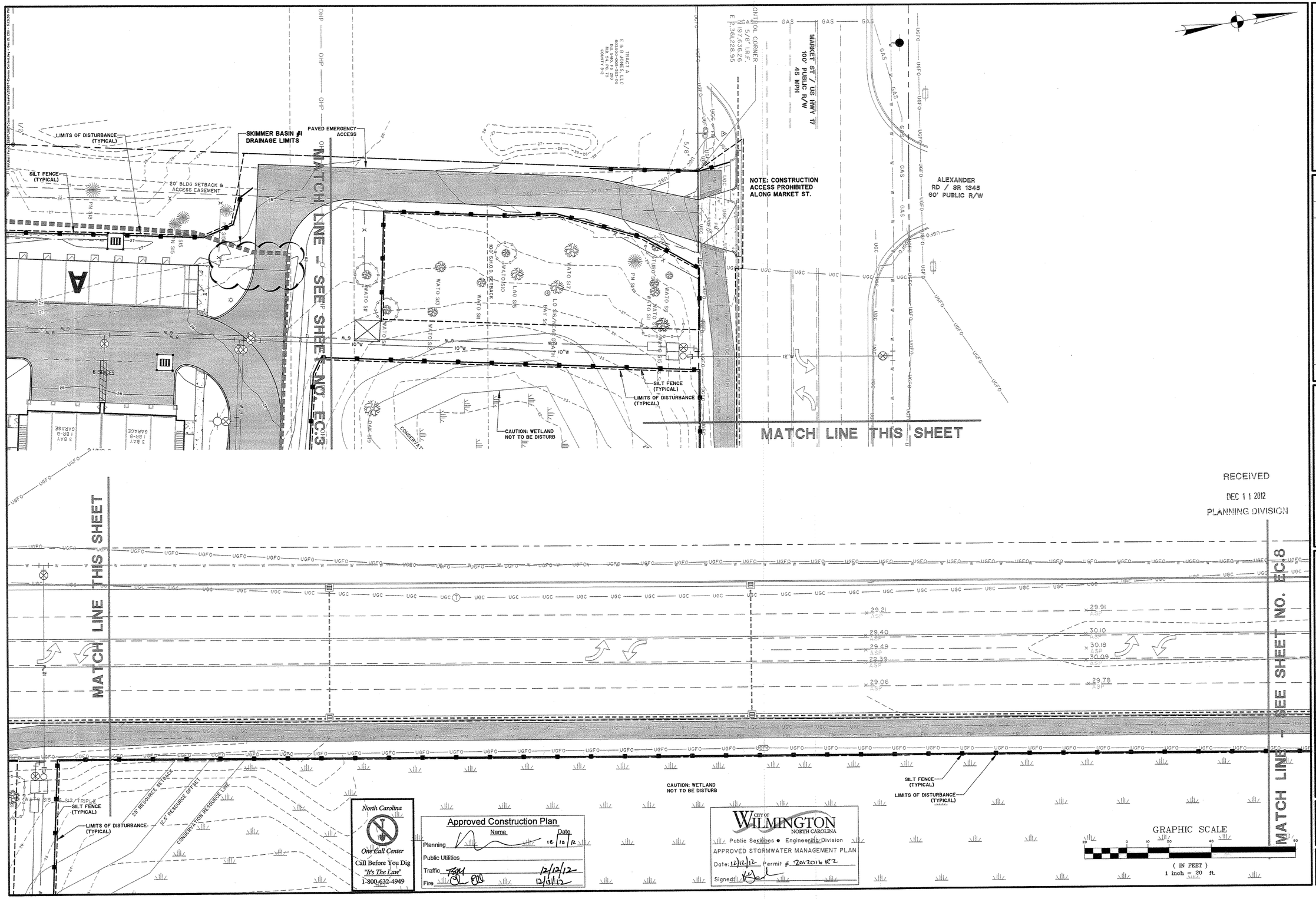

RECEIVED
DEC 1 1 2012
PLANNING DIVISION

North Carolina
One Call Center
Call Before You Dig
"It's The Law"
1-800-632-4949

Approved Construction Plan

	Name	Date
Planning		12/12/12
Public Utilities		
Traffic		12/12/12
Fire		12/13/12

CITY OF WILMINGTON
NORTH CAROLINA
Public Services • Engineering Division
APPROVED STORMWATER MANAGEMENT PLAN
Date: 12/12/12 Permit # 2012016 R2
Signed:

NORTH CAROLINA PROFESSIONAL ENGINEER 28179 JACK D. REEL 12/05/12

NORTH CAROLINA THOMAS & HUTTON ENGINEERING CO. No. F-0871 CERTIFICATE OF AUTHORIZATION

NO.	REVISIONS	BY	DATE
14	REV. EMERGENCY GATE SYMBOL & FENCE LOCATION	BDR	12/05/12
9	REVISE EMERGENCY ACCESS DRIVEWAY LOCATION	BDR	07/20/12
4	SEE REVISION SUMMARY ON SHEET G1.0	BDR	04/02/12

THOMAS & HUTTON
Engineering | Surveying | Planning | GIS | Consulting
215 South Kerr Avenue • Unit B
Wilmington, NC 28403 • 910.332.3360
www.thomasandhutton.com
Savannah, GA | Brunswick, GA | Charleston, SC | Myrtle Beach, SC

FLOURNOY DEVELOPMENT COMPANY
NEW HANOVER COUNTY, NC

AMBERLEIGH SHORES
EROSION CONTROL PLAN

JOB NO:	J-22667
DATE:	11/15/11
DRAWN:	BDR
DESIGNED:	BDR
REVIEWED:	JDR
APPROVED:	JDR
SCALE:	1" = 20'

EC.9

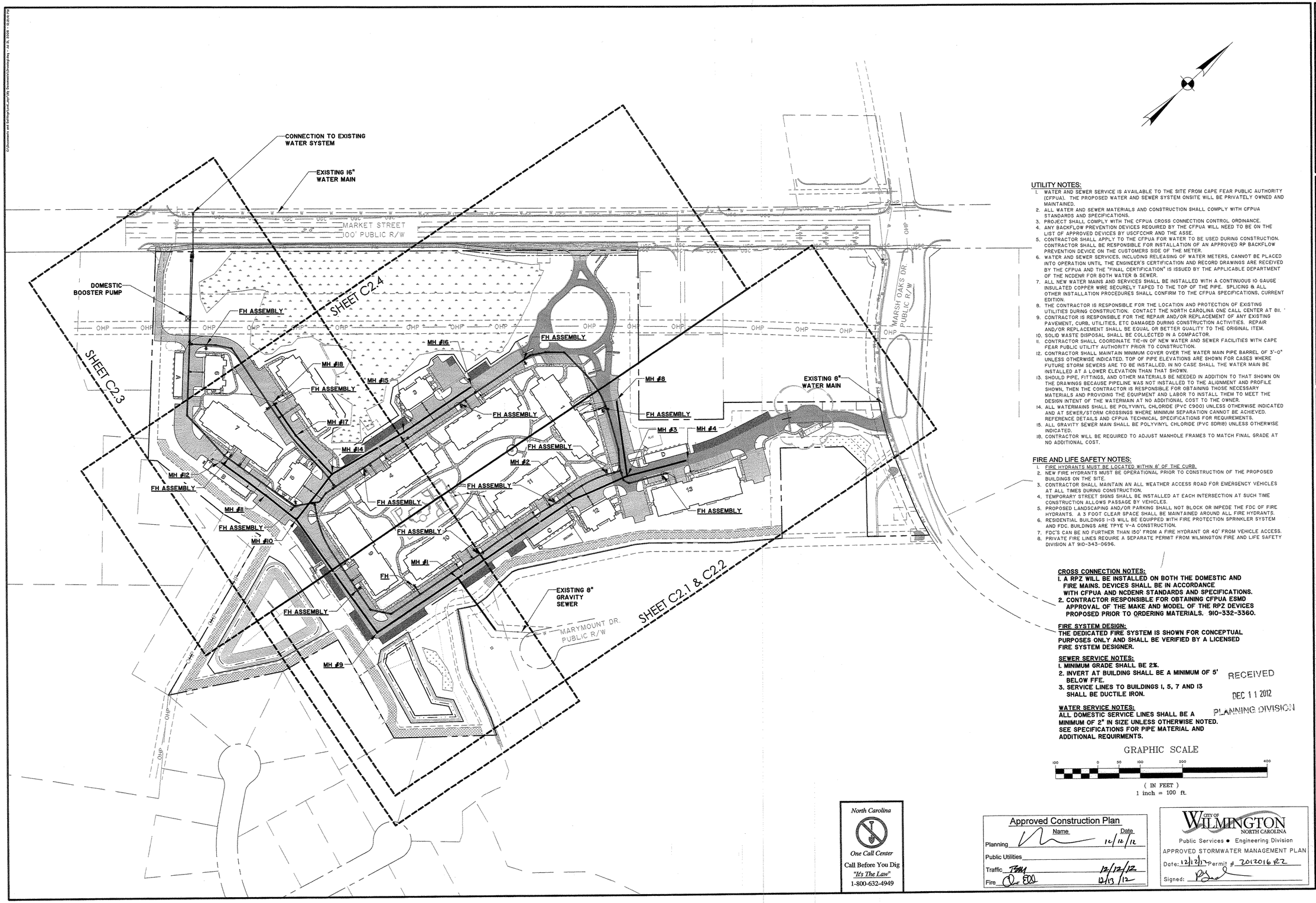

UTILITY NOTES:

1. WATER AND SEWER SERVICE IS AVAILABLE TO THE SITE FROM CAPE FEAR PUBLIC AUTHORITY (CFPUA). THE PROPOSED WATER AND SEWER SYSTEM ONSITE WILL BE PRIVATELY OWNED AND MAINTAINED.
2. ALL WATER AND SEWER MATERIALS AND CONSTRUCTION SHALL COMPLY WITH CFPUA STANDARDS AND SPECIFICATIONS.
3. PROJECT SHALL COMPLY WITH THE CFPUA CROSS CONNECTION CONTROL ORDINANCE.
4. ANY BACKFLOW PREVENTION DEVICES REQUIRED BY THE CFPUA WILL NEED TO BE ON THE LIST OF APPROVED DEVICES BY USCFCCHR AND THE ASSE.
5. CONTRACTOR SHALL APPLY TO THE CFPUA FOR WATER TO BE USED DURING CONSTRUCTION. CONTRACTOR SHALL BE RESPONSIBLE FOR INSTALLATION OF AN APPROVED RP BACKFLOW PREVENTION DEVICE ON THE CUSTOMERS SIDE OF THE METER.
6. WATER AND SEWER SERVICES, INCLUDING RELEASING OF WATER METERS, CANNOT BE PLACED INTO OPERATION UNTIL THE ENGINEER'S CERTIFICATION AND RECORD DRAWINGS ARE RECEIVED BY THE CFPUA AND THE "FINAL CERTIFICATION" IS ISSUED BY THE APPLICABLE DEPARTMENT OF THE NCDENR FOR BOTH WATER & SEWER.
7. ALL NEW WATER MAINS AND SERVICES SHALL BE INSTALLED WITH A CONTINUOUS 10 GAUGE INSULATED COPPER WIRE SECURELY TAPED TO THE TOP OF THE PIPE. SPLICING & ALL OTHER INSTALLATION PROCEDURES SHALL CONFIRM TO THE CFPUA SPECIFICATIONS, CURRENT EDITION.
8. THE CONTRACTOR IS RESPONSIBLE FOR THE LOCATION AND PROTECTION OF EXISTING UTILITIES DURING CONSTRUCTION. CONTACT THE NORTH CAROLINA ONE CALL CENTER AT 811.
9. CONTRACTOR IS RESPONSIBLE FOR THE REPAIR AND/OR REPLACEMENT OF ANY EXISTING PAVEMENT, CURB, UTILITIES, ETC DAMAGED DURING CONSTRUCTION ACTIVITIES. REPAIR AND/OR REPLACEMENT SHALL BE EQUAL OR BETTER QUALITY TO THE ORIGINAL ITEM.
10. SOLID WASTE DISPOSAL SHALL BE COLLECTED IN A COMPACTOR.
11. CONTRACTOR SHALL COORDINATE TIE-IN OF NEW WATER AND SEWER FACILITIES WITH CAPE FEAR PUBLIC UTILITY AUTHORITY PRIOR TO CONSTRUCTION.
12. CONTRACTOR SHALL MAINTAIN MINIMUM COVER OVER THE WATER MAIN PIPE BARREL OF 3'-0" UNLESS OTHERWISE INDICATED. TOP OF PIPE ELEVATIONS ARE SHOWN FOR CASES WHERE FUTURE STORM SEWERS ARE TO BE INSTALLED. IN NO CASE SHALL THE WATER MAIN BE INSTALLED AT A LOWER ELEVATION THAN THAT SHOWN.
13. SHOULD PIPE, FITTINGS, AND OTHER MATERIALS BE NEEDED IN ADDITION TO THAT SHOWN ON THE DRAWINGS BECAUSE PIPELINE WAS NOT INSTALLED TO THE ALIGNMENT AND PROFILE SHOWN, THEN THE CONTRACTOR IS RESPONSIBLE FOR OBTAINING THOSE NECESSARY MATERIALS AND PROVIDING THE EQUIPMENT AND LABOR TO INSTALL THEM TO MEET THE DESIGN INTENT OF THE WATERMAIN AT NO ADDITIONAL COST TO THE OWNER.
14. ALL WATERMAINS SHALL BE POLYVINYL CHLORIDE (PVC C900) UNLESS OTHERWISE INDICATED AND AT SEWER/STORM CROSSINGS WHERE MINIMUM SEPARATION CANNOT BE ACHIEVED. REFERENCE DETAILS AND CFPUA TECHNICAL SPECIFICATIONS FOR REQUIREMENTS.
15. ALL GRAVITY SEWER MAIN SHALL BE POLYVINYL CHLORIDE (PVC SDR18) UNLESS OTHERWISE INDICATED.
16. CONTRACTOR WILL BE REQUIRED TO ADJUST MANHOLE FRAMES TO MATCH FINAL GRADE AT NO ADDITIONAL COST.

FIRE AND LIFE SAFETY NOTES:

1. FIRE HYDRANTS MUST BE LOCATED WITHIN 8' OF THE CURB.
2. NEW FIRE HYDRANTS MUST BE OPERATIONAL PRIOR TO CONSTRUCTION OF THE PROPOSED BUILDINGS ON THE SITE.
3. CONTRACTOR SHALL MAINTAIN AN ALL WEATHER ACCESS ROAD FOR EMERGENCY VEHICLES AT ALL TIMES DURING CONSTRUCTION.
4. TEMPORARY STREET SIGNS SHALL BE INSTALLED AT EACH INTERSECTION AT SUCH TIME CONSTRUCTION ALLOWS PASSAGE BY VEHICLES.
5. PROPOSED LANDSCAPING AND/OR PARKING SHALL NOT BLOCK OR IMPEDE THE FDC OF FIRE HYDRANTS. A 3 FOOT CLEAR SPACE SHALL BE MAINTAINED AROUND ALL FIRE HYDRANTS.
6. RESIDENTIAL BUILDINGS 1-13 WILL BE EQUIPPED WITH FIRE PROTECTION SPRINKLER SYSTEM AND FDC. BUILDINGS ARE TPYE V-A CONSTRUCTION.
7. FDC'S CAN BE NO FURTHER THAN 150' FROM A FIRE HYDRANT OR 40' FROM VEHICLE ACCESS.
8. PRIVATE FIRE LINES REQUIRE A SEPARATE PERMIT FROM WILMINGTON FIRE AND LIFE SAFETY DIVISION AT 910-343-0696.

CROSS CONNECTION NOTES:

1. A RPZ WILL BE INSTALLED ON BOTH THE DOMESTIC AND FIRE MAINS. DEVICES SHALL BE IN ACCORDANCE WITH CFPUA AND NCDENR STANDARDS AND SPECIFICATIONS.
2. CONTRACTOR RESPONSIBLE FOR OBTAINING CFPUA ESMD APPROVAL OF THE MAKE AND MODEL OF THE RPZ DEVICES PROPOSED PRIOR TO ORDERING MATERIALS. 910-332-3360.

FIRE SYSTEM DESIGN:

THE DEDICATED FIRE SYSTEM IS SHOWN FOR CONCEPTUAL PURPOSES ONLY AND SHALL BE VERIFIED BY A LICENSED FIRE SYSTEM DESIGNER.

SEWER SERVICE NOTES:

1. MINIMUM GRADE SHALL BE 2%.
2. INVERT AT BUILDING SHALL BE A MINIMUM OF 5' BELOW FFE.
3. SERVICE LINES TO BUILDINGS 1, 5, 7 AND 13 SHALL BE DUCTILE IRON.

RECEIVED
DEC 11 2012
PLANNING DIVISION

WATER SERVICE NOTES:

ALL DOMESTIC SERVICE LINES SHALL BE A MINIMUM OF 2" IN SIZE UNLESS OTHERWISE NOTED. SEE SPECIFICATIONS FOR PIPE MATERIAL AND ADDITIONAL REQUIRMENTS.

GRAPHIC SCALE

100 0 50 100 200 400

(IN FEET)
1 inch = 100 ft.

North Carolina
One Call Center
Call Before You Dig
"It's The Law"
1-800-632-4949

Approved Construction Plan

	Name	Date
Planning		12/12/12
Public Utilities		
Traffic	TBM	12/12/12
Fire	EDL	12/13/12

CITY OF WILMINGTON NORTH CAROLINA
Public Services • Engineering Division
APPROVED STORMWATER MANAGEMENT PLAN
Date: 12/12/12 Permit # 2012016 R2
Signed:

NO.	REVISIONS	BY	DATE
14	SEE REVISION SUMMARY ON SHEET G1.0	BDR	12/05/12
12	ADD PREVIOUS REVISION NOTES	BDR	09/27/12
11	SEE REVISION SUMMARY ON SHEET G1.0	BDR	09/07/12
10	SEE REVISION SUMMARY ON SHEET G1.0	BDR	07/24/12
9	REVISE EMERGENCY ACCESS DRIVEWAY LOCATION	BDR	07/20/12
3	REVISE UTILITY NOTE #14	BDR	03/27/12
2	PRIVATE WATER/SEWER (SEE SHEET G1.0 FOR MORE INFO)	BDR	03/09/12
1	SEE REVISION SUMMARY ON SHEET G1.0	BDR	01/25/12

THOMAS & HUTTON
Engineering | Surveying | Planning | GIS | Consulting
215 South Kerr Avenue • Unit B
Wilmington, NC 28403 • 910.332.3360
www.thomasandhutton.com
Savannah, GA | Brunswick, GA | Charleston, SC | Myrtle Beach, SC

THOMAS & HUTTON ENGINEERING CO. No. F-0871 CERTIFICATE OF AUTHORITY NORTH CAROLINA

NORTH CAROLINA PROFESSIONAL SEAL JACK D. RIGGS 12/05/12

FLOURNOY DEVELOPMENT COMPANY
NEW HANOVER COUNTY, NC

AMBERLEIGH SHORES

WATER AND SEWER OVERALL

JOB NO:	J-22667
DATE:	11/15/11
DRAWN:	BDR
DESIGNED:	BDR
REVIEWED:	JDR
APPROVED:	JDR
SCALE:	1" = 100'

C2.0

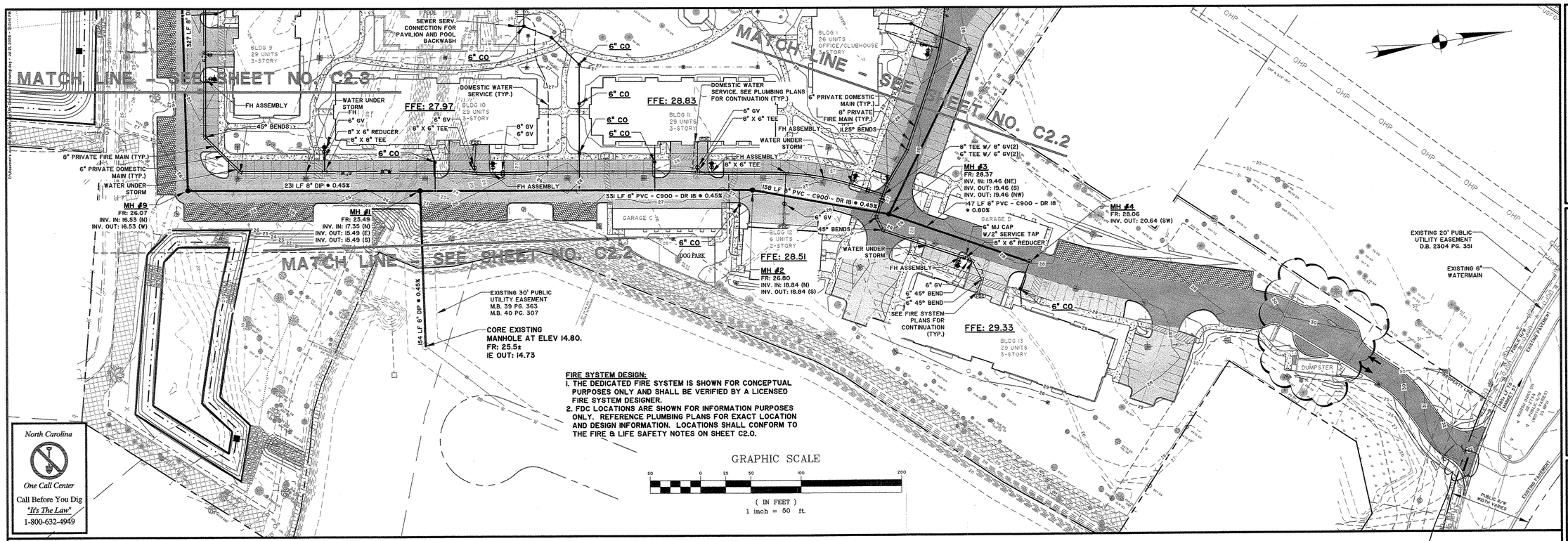

FIRE SYSTEM DESIGN:

1. THE DEDICATED FIRE SYSTEM IS SHOWN FOR CONCEPTUAL PURPOSES ONLY AND SHALL BE VERIFIED BY A LICENSED FIRE SYSTEM DESIGNER.
2. FDC LOCATIONS ARE SHOWN FOR INFORMATION PURPOSES ONLY. REFERENCE PLUMBING PLANS FOR EXACT LOCATION AND DESIGN INFORMATION. LOCATIONS SHALL CONFORM TO THE FIRE & LIFE SAFETY NOTES ON SHEET C2.0.

North Carolina
One Call Center
Call Before You Dig
"It's The Law"
1-800-632-4949

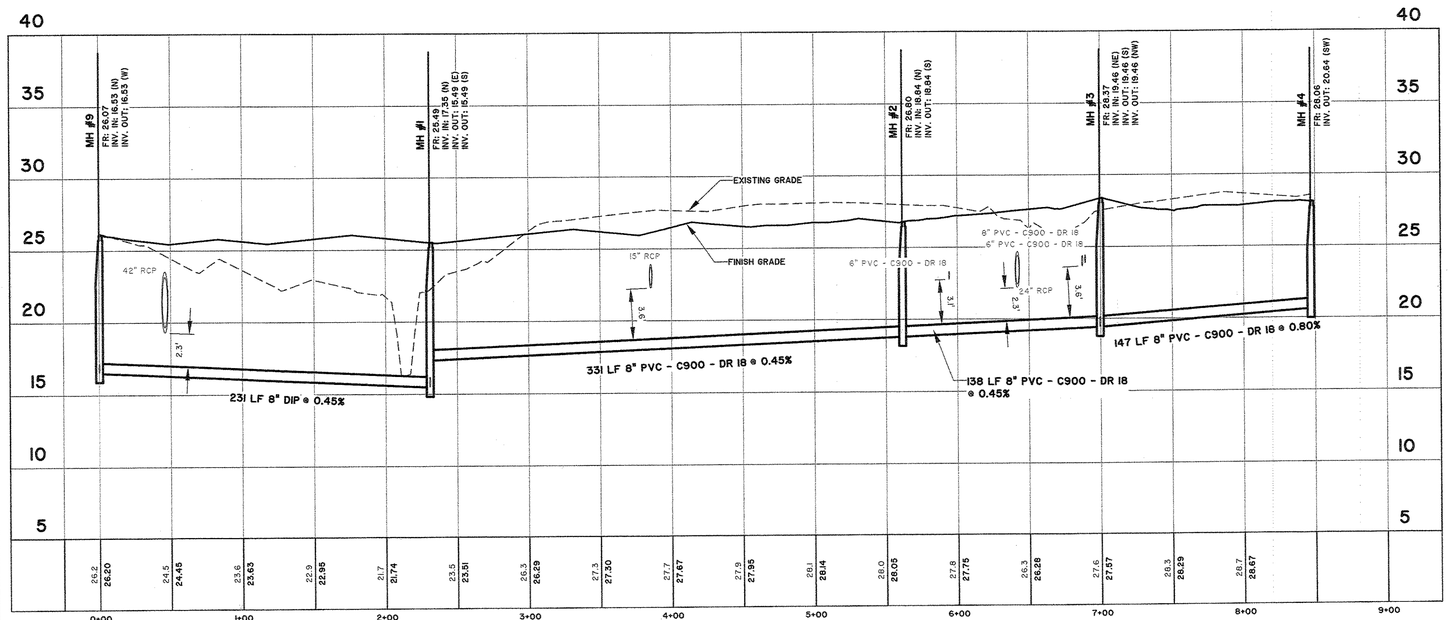

SEWER – RUN 1
STATIONS: –0+25 – 9+00
SCALE: HORZ.: 1" = 50'
VERT.: 1" = 5'

Stop bar to be 4' back from stop sign.
JDR
12-11-12

RECEIVED
DEC 11 2012
PLANNING DIVISION

Approved Construction Plan	Name	Date
Planning		12/12/12
Public Utilities		
Traffic	TBM	12/12/12
Fire		12/13/12

CITY OF WILMINGTON NORTH CAROLINA
Public Services • Engineering Division
APPROVED STORMWATER MANAGEMENT PLAN
Date: 12/12/12 Permit # 2012016R2
Signed:

NORTH CAROLINA PROFESSIONAL ENGINEER SEAL 019 THOMAS ENGINEERING CO. No. F-0871 CERTIFICATE OF AUTHORITY
NORTH CAROLINA PROFESSIONAL ENGINEER SEAL 19863 JACK D. REEVES
12/05/12

NO.	REVISIONS	BY	DATE
14	SEE REVISION SUMMARY ON SHEET G1.0	BDR	12/05/12
12	ADD PREVIOUS REVISION NOTES	BDR	08/27/12
7	ADD SEPARATION BEWTEEN CROSSINGS PER NCDENR	BDR	05/18/12
3	REVISE WATER ELEVATIONS AT SEWER CROSSINGS	BDR	03/27/12
2	PRIVATE WATER/SEWER (SEE SHEET G1.0 FOR MORE INFO)	BDR	03/09/12
1	SEE REVISION SUMMARY ON SHEET G1.0	BDR	01/25/12

THOMAS & HUTTON
Engineering | Surveying | Planning | Gas | Consulting
215 South Kerr Avenue • Unit B
Wilmington, NC 28403 • 910.332.3360
www.thomasandhutton.com
Savannah, GA | Brunswick, GA | Charleston, SC | Myrtle Beach, SC

FLOURNOY DEVELOPMENT COMPANY
NEW HANOVER COUNTY, NC
AMBERLEIGH SHORES
WATER AND SEWER PLAN & PROFILES

JOB NO:	J-22667
DATE:	11/15/11
DRAWN:	BDR
DESIGNED:	BDR
REVIEWED:	JDR
APPROVED:	JDR
SCALE:	AS NOTED

C2.1

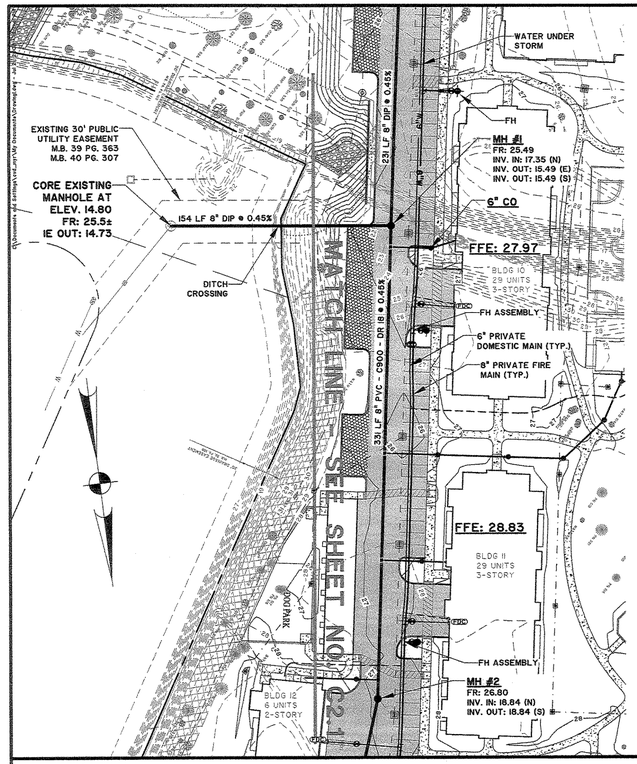

FIRE SYSTEM DESIGN:
1. THE DEDICATED FIRE SYSTEM IS SHOWN FOR CONCEPTUAL PURPOSES ONLY AND SHALL BE VERIFIED BY A LICENSED FIRE SYSTEM DESIGNER.
2. FDC LOCATIONS ARE SHOWN FOR INFORMATION PURPOSES ONLY. REFERENCE PLUMBING PLANS FOR EXACT LOCATION AND DESIGN INFORMATION. LOCATIONS SHALL CONFORM TO THE FIRE & LIFE SAFETY NOTES ON SHEET C2.0.

North Carolina
One Call Center
Call Before You Dig
"It's The Law"
1-800-632-4949

GRAPHIC SCALE
50 0 25 50 100 200
(IN FEET)
1 inch = 50 ft.

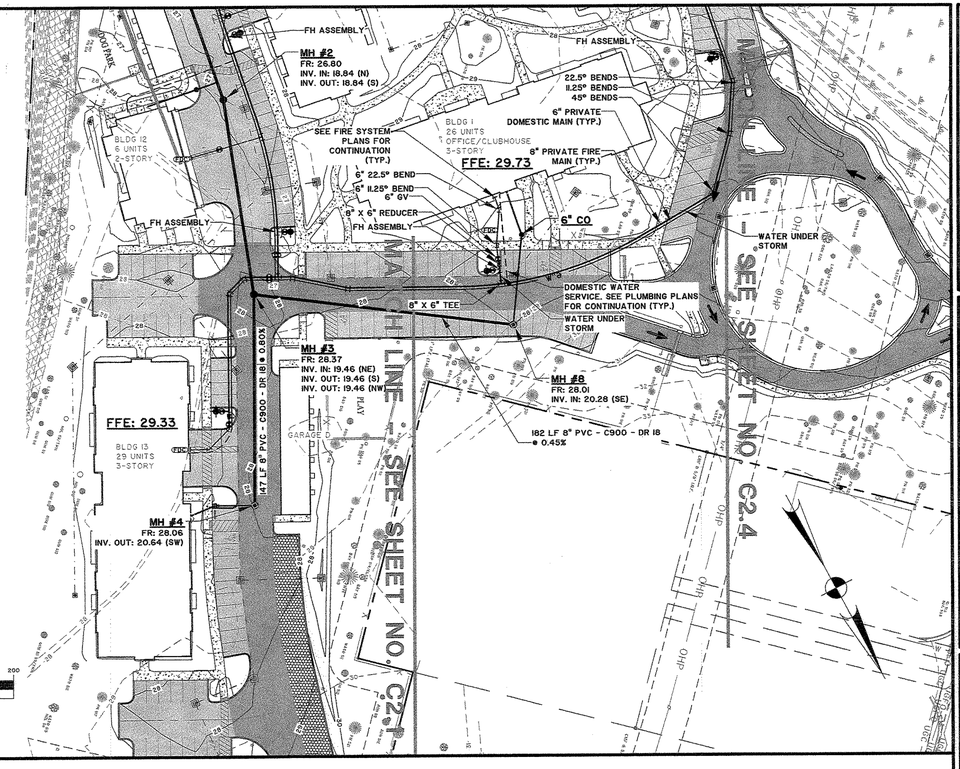

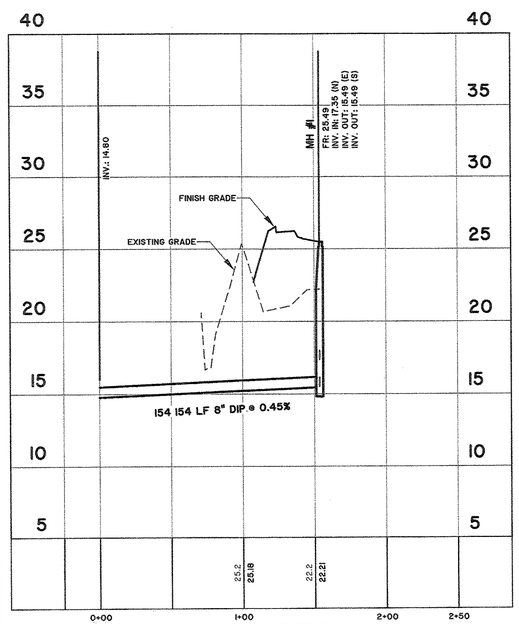

SEWER – RUN 2
STATIONS: –0+25 – 2+50
SCALE: HORZ.: 1" = 50'
VERT.: 1" = 5'

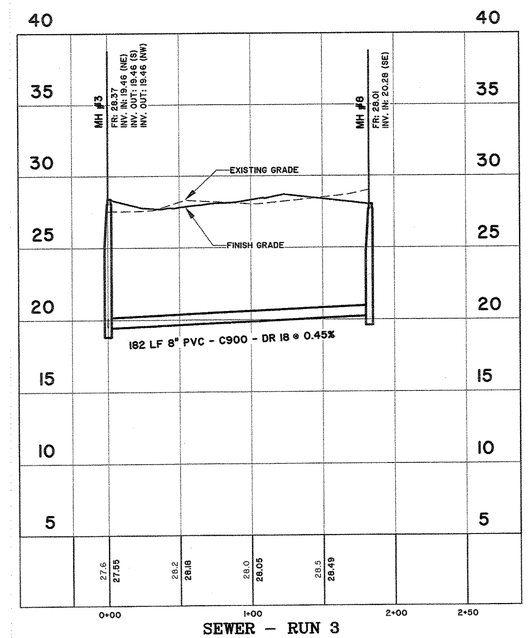

SEWER – RUN 3
STATIONS: –0+25 – 2+50
SCALE: HORZ.: 1" = 50'
VERT.: 1" = 5'

RECEIVED
DEC 11 2012
PLANNING DIVISION

Approved Construction Plan

	Name	Date
Planning		12/12/12
Public Utilities		
Traffic		12/12/12
Fire		12/12/12

CITY OF WILMINGTON NORTH CAROLINA
Public Services • Engineering Division
APPROVED STORMWATER MANAGEMENT PLAN
Date: 12/12/12 Permit # 20120166R2
Signed:

THOMAS & HUTTON ENGINEERING CO. HOLLYWOOD, NORTH CAROLINA CERTIFICATE OF AUTHORIZATION No. F-0871

NORTH CAROLINA PROFESSIONAL ENGINEER SEAL 19319 JACK D. RIGGS JR.
9/27/12

NO.	REVISIONS	BY	DATE
12	ADD PREVIOUS REVISION NOTES	BDR	09/27/12
2	PRIVATE WATER/SEWER (SEE SHEET 6.0 FOR MORE INFO)	BDR	05/09/12
1	SEE REVISION SUMMARY ON SHEET 6.0	BDR	01/26/12

THOMAS & HUTTON
Engineering | Surveying | Planning | GIS | Consulting
215 South Kerr Avenue • Unit B
Wilmington, NC 28403 • 910.332.3360
www.thomasandhutton.com
Savannah, GA | Brunswick, GA | Charleston, SC | Myrtle Beach, SC

FLOURNOY DEVELOPMENT COMPANY
NEW HANOVER COUNTY, NC
AMBERLEIGH SHORES
WATER AND SEWER PLAN & PROFILES

JOB NO:	J-22667
DATE:	11/15/11
DRAWN:	BDR
DESIGNED:	BDR
REVIEWED:	JDR
APPROVED:	JDR
SCALE:	AS NOTED

C2.2

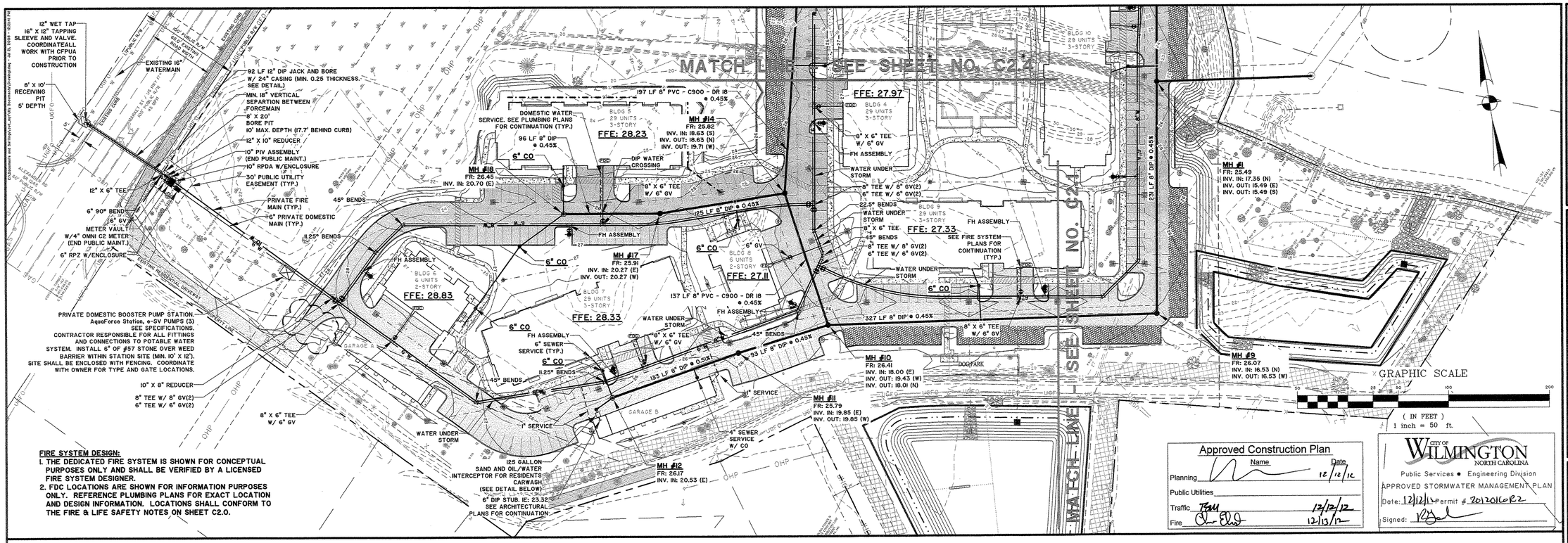

FIRE SYSTEM DESIGN:

1. THE DEDICATED FIRE SYSTEM IS SHOWN FOR CONCEPTUAL PURPOSES ONLY AND SHALL BE VERIFIED BY A LICENSED FIRE SYSTEM DESIGNER.
2. FDC LOCATIONS ARE SHOWN FOR INFORMATION PURPOSES ONLY. REFERENCE PLUMBING PLANS FOR EXACT LOCATION AND DESIGN INFORMATION. LOCATIONS SHALL CONFORM TO THE FIRE & LIFE SAFETY NOTES ON SHEET C2.0.

Approved Construction Plan

	Name	Date
Planning		12/12/12
Public Utilities		
Traffic	TAM	12/12/12
Fire		12-13-12

CITY OF WILMINGTON NORTH CAROLINA
Public Services • Engineering Division
APPROVED STORMWATER MANAGEMENT PLAN
Date: 12/12/12 Permit # 20120160R2
Signed:

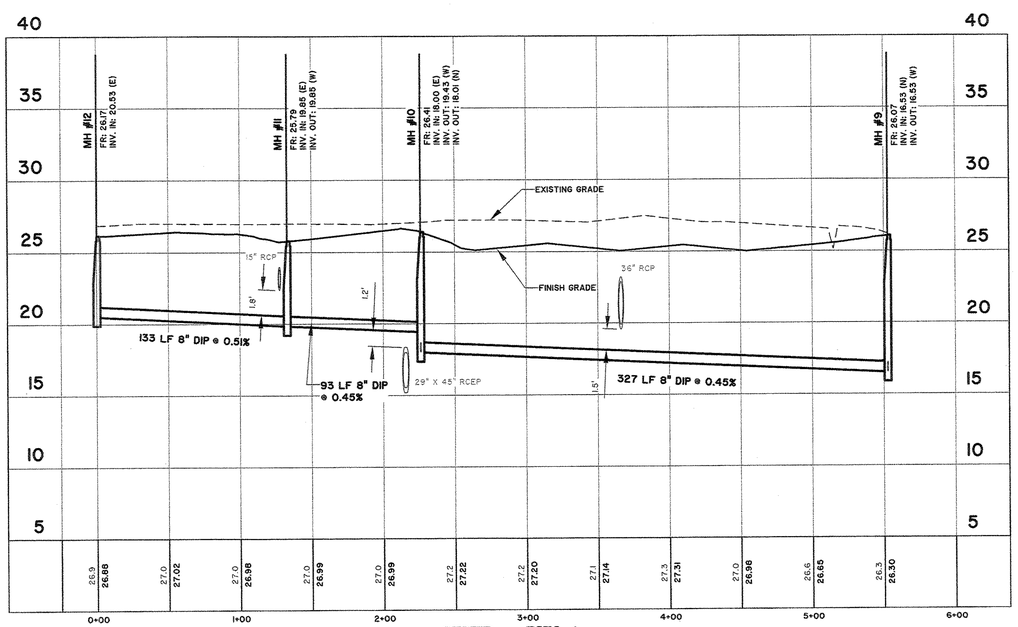

SEWER – RUN 4
STATIONS: -0+25 – 6+00
SCALE: HORZ.: 1" = 50'
VERT.: 1" = 5'

NOTE:

1. THE PRECAST MANUFACTURE IS TO PREPARE AND SUBMIT TO THE ENGINEER DESIGN DETAILS AND CALCULATIONS FOR THE STRUCTURES SHOWN BASED ON THE DESIGN CRITERIA SPECIFIED. THE DESIGN SHALL BE PERFORMED UNDER THE DIRECT SUPERVISION AND SEALED BY A PROFESSIONAL ENGINEER REGISTERED IN THE STATE OF NORTH CAROLINA EXPERIENCED IN THE DESIGN OF PRECAST CONCRETE. THE DESIGN SHALL INCLUDE PROVISIONS FOR HANDLING STRESSES AND CONSTRUCTION LOADS. REPRODUCED COPIES OF ASTM C789 "STANDARD SPECIFICATIONS FOR PRECAST REINFORCED CONCRETE BOX SECTIONS FOR CULVERTS, STORM DRAINS, AND SEWERS" WILL NOT BE ACCEPTED AS A SUBSTITUTE FOR DESIGN.
2. THE SEPARATOR SHALL HAVE A SAMPLING CHAMBER IN ACCORDANCE WITH CFPUA SANITARY SEWER DETAIL SS-2 LOCATED ON THE OUTLET DISCHARGE AND PRIOR TO MIXING WITH SANITARY WASTEWATER.

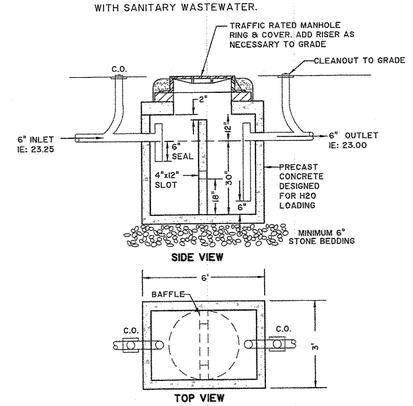

125 GALLON SAND AND OIL/WATER INTERCEPTOR
NOT TO SCALE

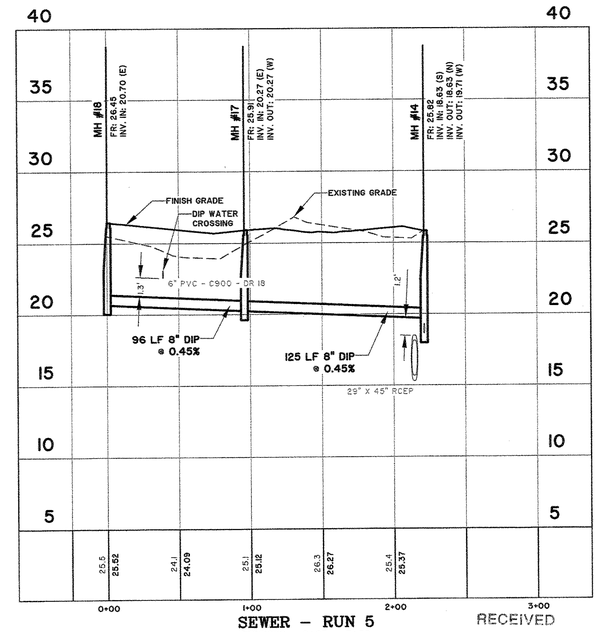

SEWER – RUN 5
STATIONS: -0+25 – 3+00
SCALE: HORZ.: 1" = 50'
VERT.: 1" = 5'

RECEIVED
DEC 1 1 2012
PLANNING DIVISION

NO.	REVISIONS	BY	DATE
14	REV. EMERGENCY GATE SYMBOL & FENCE LOCATION	BDR	12/05/12
12	ADD PREVIOUS REVISION NOTES	BDR	09/27/12
10	SEE REVISION SUMMARY ON SHEET G1.0	BDR	07/24/12
9	REVISE EMERGENCY ACCESS DRIVEWAY LOCATION	BDR	07/20/12
7	ADD SEPARATION BETWEEN CROSSINGS PER NCDENR	BDR	05/18/12
5	ADD NOTE #2 TO SEPARATOR DETAIL	BDR	04/23/12
3	CFPUA REVISIONS (SEE SHEET G1.0 FOR MORE INFO)	BDR	03/27/12
2	PRIVATE WATER/SEWER (SEE SHEET G1.0 FOR MORE INFO)	BDR	03/09/12
1	SEE REVISION SUMMARY ON SHEET G1.0	BDR	00/29/12

THOMAS & HUTTON
Engineering | Surveying | Planning | GIS | Consulting
215 South Kerr Avenue • Unit B
Wilmington, NC 28403 • 910.332.3360
www.thomasandhutton.com
Savannah, GA | Brunswick, GA | Charleston, SC | Myrtle Beach, SC

FLOURNOY DEVELOPMENT COMPANY
NEW HANOVER COUNTY, NC

AMBERLEIGH SHORES

WATER AND SEWER PLAN & PROFILES

JOB NO:	J-22667
DATE:	11/15/11
DRAWN:	BDR
DESIGNED:	BDR
REVIEWED:	JDR
APPROVED:	JDR
SCALE:	AS NOTED

C2.3

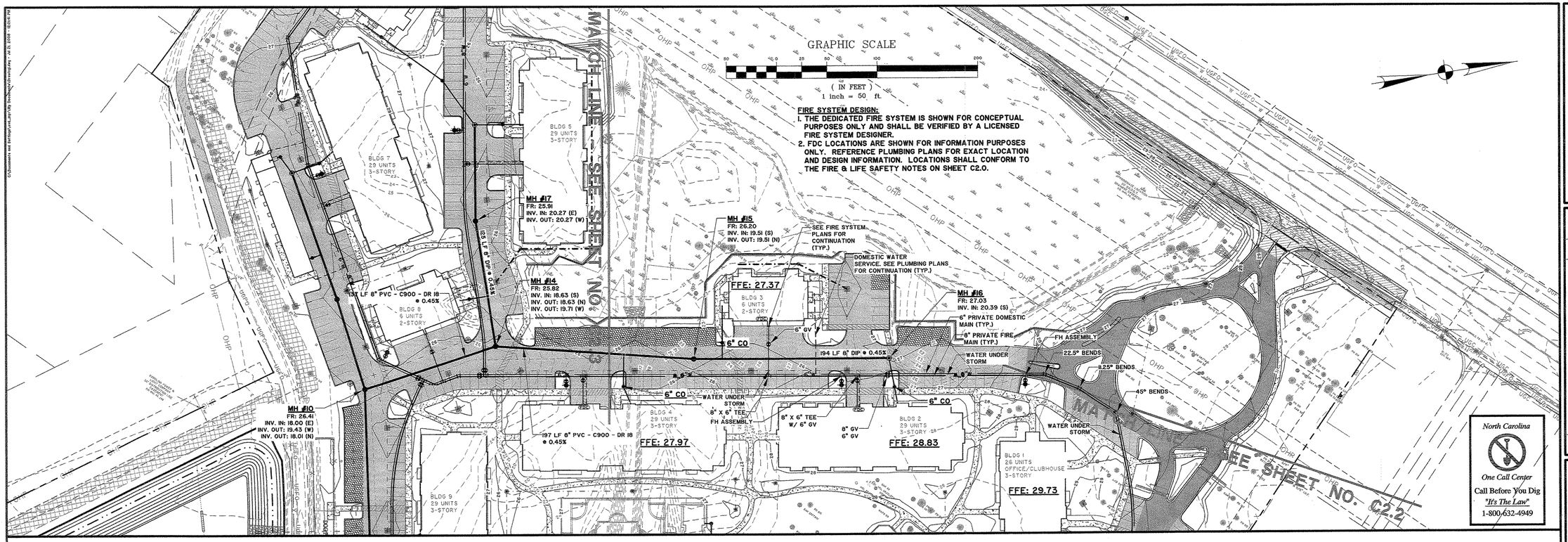

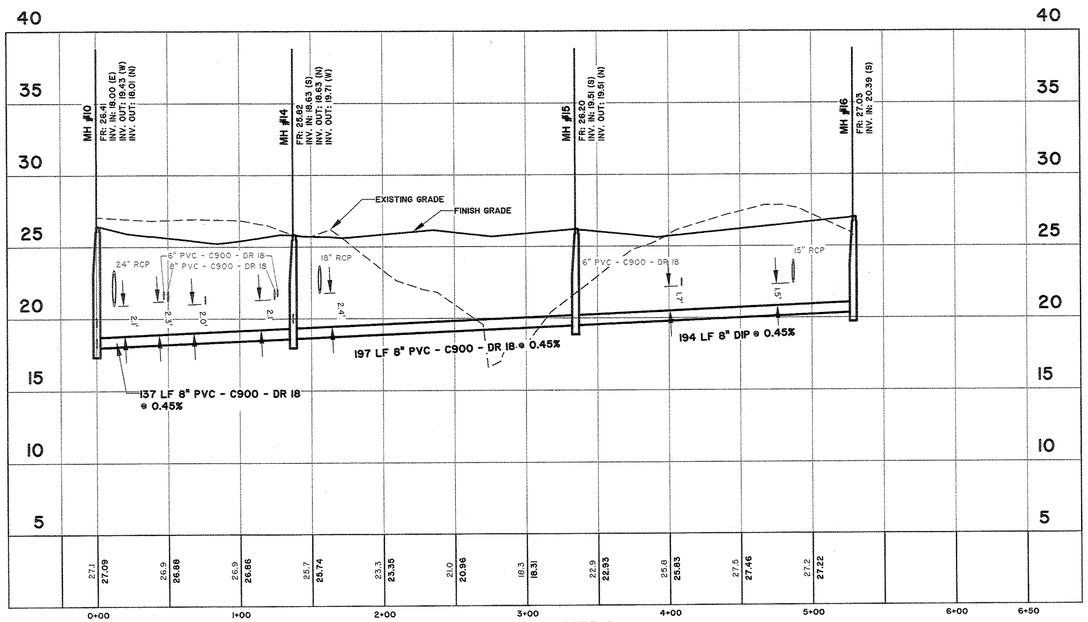

SEWER – RUN 6
STATIONS: –0+25 – 6+50
SCALE: HORZ.: 1" = 50'
VERT.: 1" = 5'

RECEIVED
DEC 11 2012
PLANNING DIVISION

Approved Construction Plan		
	Name	Date
Planning		12/12/12
Public Utilities		
Traffic		12/12/12
Fire		12/13/12

CITY OF WILMINGTON NORTH CAROLINA
Public Services • Engineering Division
APPROVED STORMWATER MANAGEMENT PLAN
Date: 12/12/12 Permit # 20120616 22
Signed:

NORTH CAROLINA PROFESSIONAL ENGINEERING SEAL 025871 JAMES D. RIDER
THOMAS & HUTTON ENGINEERING CO. No. F-0871 CERTIFICATE OF AUTHORIZATION

NO.	REVISIONS	BY	DATE
12	ADD PREVIOUS REVISION NOTES	BDR	08/27/12
11	SEE REVISION SUMMARY ON SHEET 0.0	BDR	08/07/12
10	SEE REVISION SUMMARY ON SHEET 0.0	BDR	07/24/12
7	ADD SEPARATION BETWEEN CROSSINGS PER NCDENR	BDR	05/18/12
2	SEE REVISION SUMMARY ON SHEET 0.0	BDR	03/27/12
1	SEE REVISION SUMMARY ON SHEET 0.0	BDR	01/25/12

THOMAS & HUTTON
Engineering | Surveying | Planning | GIS | Consulting
215 South Kerr Avenue • Unit B
Wilmington, NC 28403 • 910.332.3360
www.thomasandhutton.com
Savannah, GA | Brunswick, GA | Charleston, SC | Myrtle Beach, SC

FLOURNOY DEVELOPMENT COMPANY
NEW HANOVER COUNTY, NC
AMBERLEIGH SHORES
WATER AND SEWER PLAN & PROFILES

JOB NO:	J-22667
DATE:	11/15/11
DRAWN:	BDR
DESIGNED:	BDR
REVIEWED:	JDR
APPROVED:	JDR
SCALE:	AS NOTED

C2.4

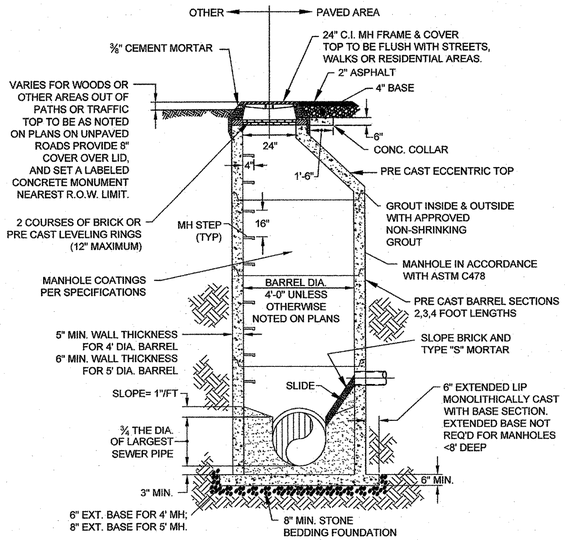

PRECAST CONCRETE OFFSET MANHOLE TYPICAL

(LESS THAN 30" DROP)
NOT TO SCALE

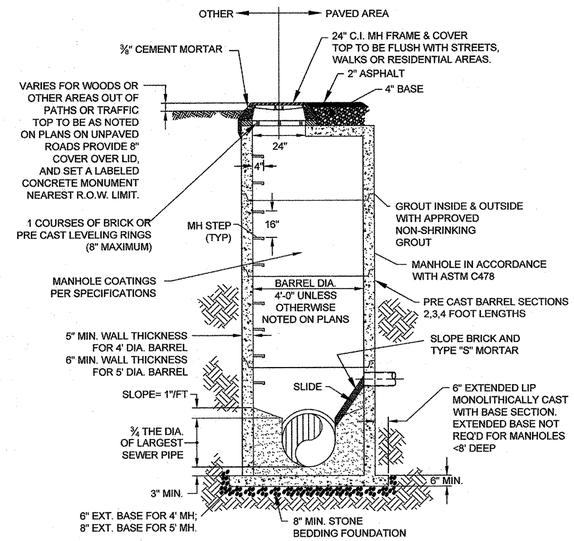

PRECAST CONCRETE FLAT TOP MANHOLE TYPICAL

(LESS THAN 30" DROP)
NOT TO SCALE

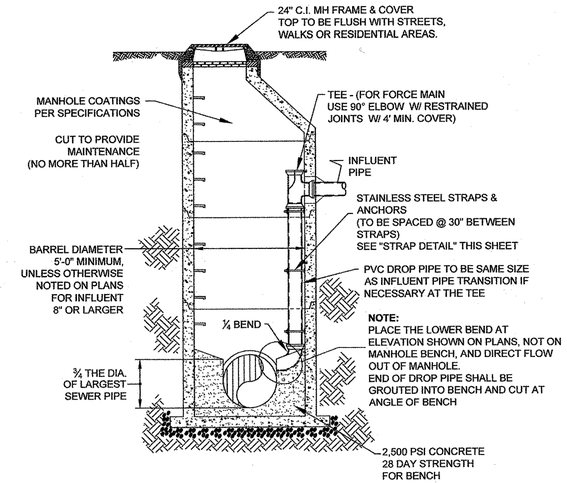

DROP MANHOLE

(MORE THAN 30" DROP)
NOT TO SCALE

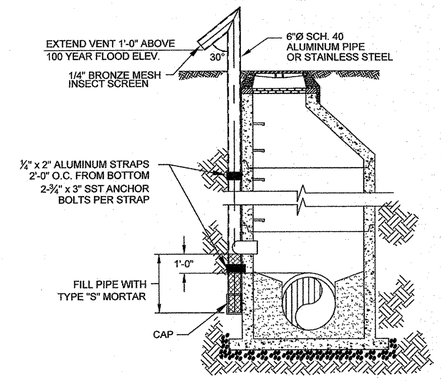

STANDARD VENT MANHOLE

NOT TO SCALE

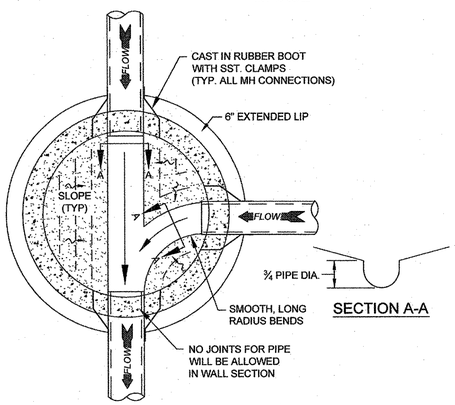

SECTION A-A

MANHOLE FLOOR PLAN

NOT TO SCALE

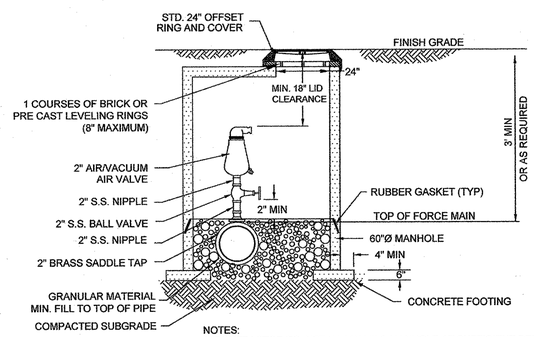

NOTES:
1. CONTRACTOR TO INSTALL VALVE & MANHOLE AT SUFFICIENT DEPTH TO ALLOW FOR ACCESS.
2. FORCE MAIN TO BE OFFSET IN MANHOLE
3. REFER TO SPECIFICATIONS FOR ADDITIONAL DETAILS.
4. USE SOLID BASE IN AREAS WITH HISTORICALLY HIGH GROUNDWATER (WITHIN 2' OF FORCE MAIN INVERT)

AIR / VACUUM AND AIR RELEASE COMBINATION VALVE

NOT TO SCALE

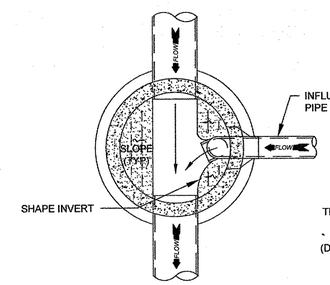

DROP MANHOLE FLOOR PLAN

NOT TO SCALE

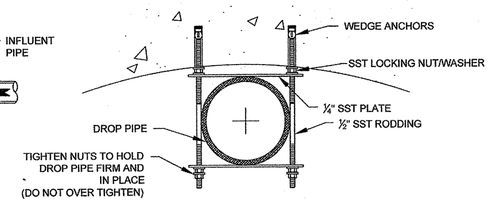

NOTE: ALL PARTS TO BE SST.

STRAP DETAIL

NOT TO SCALE

1. SEWER GUARDS REQUIRED AT ALL MANHOLES. STAINLESS STEEL SEWER GUARDS REQUIRED AT MANHOLES LOCATED IN TRAFFIC AREAS.
2. SERVICES SHALL BE PERPENDICULAR TO MAIN AND TERMINATE AT R/W LINE. SERVICES IN CUL-DE-SACS ARE REQUIRED TO BE PERPENDICULAR, OR MUST ORIGINATE IN MANHOLE AND TERMINATE AT RIGHT-OF-WAY LINE.
3. ALL SERVICES TYING INTO DUCTILE IRON MAINS SHALL BE CONSTRUCTED OF CLASS 50, DIP, WITH PROTECTO 401 CERAMIC EPOXY LINING.
4. MINIMUM 10' UTILITIES EASEMENT PROVIDED ALONG THE FRONTAGE OF ALL LOTS AND AS SHOWN FOR NEW DEVELOPMENTS.
5. NO FLEXIBLE COUPLINGS SHALL BE USED.
6. ALL STAINLESS STEEL FITTINGS SHALL BE 3/16".

STANDARD SEWER NOTES

(REQUIRED ON ALL SEWER PLAN AND PROFILE SHEETS)

RECEIVED
DEC 11 2012
PLANNING DIVISION

GENERAL NOTES:

1. NO EXCAVATED MATERIAL SHALL BE PLACED IN ANY STREAM, DITCH OR DRAINAGE-WAY.
2. THE CONTRACTOR IS RESPONSIBLE FOR LOCATING ALL UNDERGROUND UTILITIES BEFORE ANY CONSTRUCTION BEGINS.
3. THE CONTRACTOR IS RESPONSIBLE FOR TEMPORARY SEDIMENT AND EROSION CONTROL MEASURES WHILE CONSTRUCTION IS IN PROGRESS.
4. THE CONTRACTOR IS RESPONSIBLE FOR STABILIZATION OF ALL DISTURBED AREAS.
5. THE CONTRACTOR IS RESPONSIBLE FOR LAY DOWN & STOCKPILE AREAS (TO ARRANGE AND INSURE COMPLIANCE WITH ALL LOCAL AND STATE REGULATIONS).

THE DETAILS SHOWN HEREON SUPERCEDE CFPUA WRITTEN TECHNICAL SPECIFICATIONS VERSIONS 1.00 - 1.04

REV:	DESCRIPTION:	DATE:

01/03/12
NORTH CAROLINA PROFESSIONAL SEAL 028179 ENGINEER JACK DAVID REEL

SANITARY SEWER STANDARD DETAILS

SANITARY SEWER STANDARD DETAILS
SS-1

CAPE FEAR PUBLIC UTILITY AUTHORITY
235 GOVERNMENT CENTER DRIVE
WILMINGTON, NC 28403
OFFICE: (910)332-6560
Stewardship. Sustainability. Service.

DATE:	1/9/12
SCALE:	N/A
DRAWN BY:	CFPUA
CHECKED BY:	CFPUA
PROJECT NO. :	
SHEET NO:	1/4

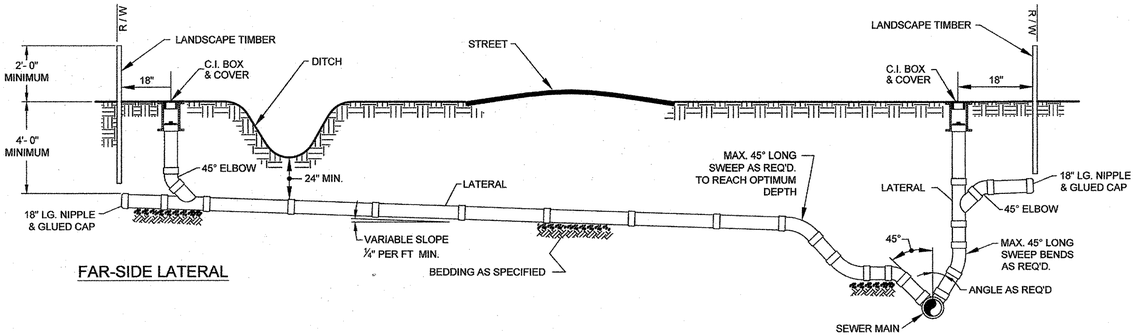

FAR-SIDE LATERAL

NEAR-SIDE LATERAL WITH RIGHT-OF-WAY RESTRICTIONS

NOTE: FOR PRIVATE 8" SERVICES, MANHOLES ARE REQUIRED FOR TIE–IN TO MAIN

STANDARD SERVICE CONNECTION TO SANITARY SEWER

NOT TO SCALE

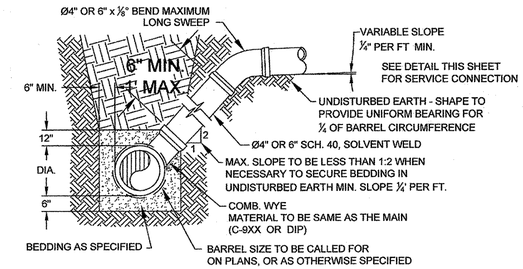

NOTE: FOR PRIVATE 8" SERVICES, MANHOLES ARE REQUIRED FOR TIE–IN TO MAIN

STANDARD SERVICE LATERAL

(MAIN DEPTH LESS THAN 8ft)

NOT TO SCALE

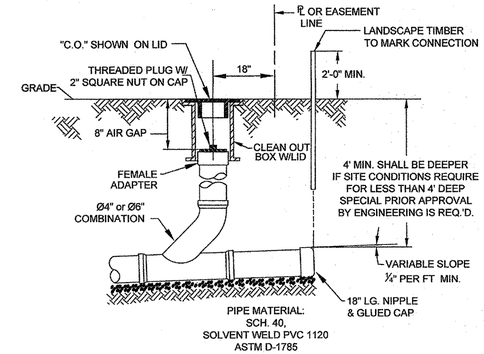

NOTE: FOR PRIVATE 8" SERVICES, MANHOLES ARE REQUIRED FOR TIE–IN TO MAIN

SERVICE CONNECTION & CLEAN-OUT

NOT TO SCALE

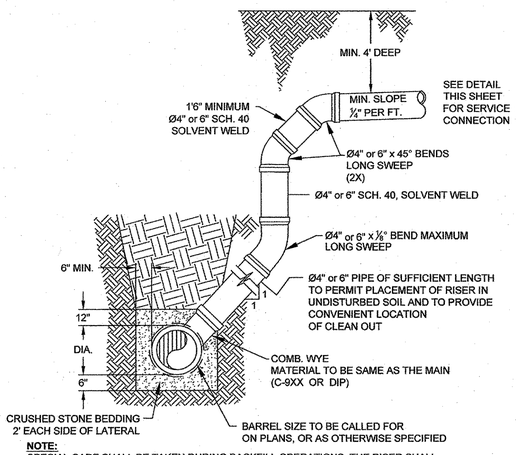

NOTE:
SPECIAL CARE SHALL BE TAKEN DURING BACKFILL OPERATIONS. THE RISER SHALL BE PLUMB AND TRUE AT ALL TIMES, AND REST ON FIRM, STABLE FOUNDATION.

FOR PRIVATE 8" SERVICES, MANHOLES ARE REQUIRED FOR TIE–IN TO MAIN

DEEP SERVICE LATERAL

(MAIN DEPTH GREATER THAN 8ft)

NOT TO SCALE

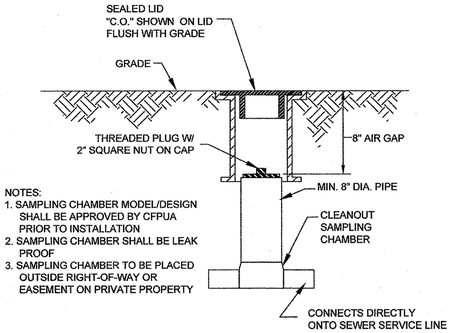

NOTES:
1. SAMPLING CHAMBER MODEL/DESIGN SHALL BE APPROVED BY CFPUA PRIOR TO INSTALLATION
2. SAMPLING CHAMBER SHALL BE LEAK PROOF
3. SAMPLING CHAMBER TO BE PLACED OUTSIDE RIGHT-OF-WAY OR EASEMENT ON PRIVATE PROPERTY

SAMPLING CHAMBER

NOT TO SCALE

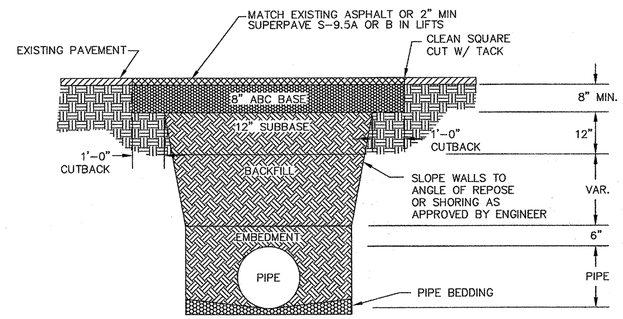

NOTES:
1. BACKFILL SHALL BE SUITABLE MATERIAL THAT IS FREE FROM HEAVY CLAY, GUMBOS, DEBRIS, ORGANICS AND LITTLE TO NO EXCESSIVE MOISTURE.
2. SELECT BACKFILL MAY BE SUBSTITUTED OR REQUIRED BY CITY TO ACHIEVE COMPACTION, (I.E. #57, ABC, CRUSHED LIMESTONE, CLEAN SAND, FLOWABLE FILL, ETC).
3. 8–INCH OF ABC BASE MATERIAL SHALL BE USED ON CITY STREETS.
4. BACKFILL AND BASE MATERIALS SHALL BE COMPACTED 12" MINIMUM LIFTS
5. SOIL SHALL BE COMPACTED BY A MECHANIZED TAMPER (I.E JUMPING JACK), HOWEVER, VIBRATORY ROLLERS > 18" WIDTH MAY BE USED FOR LARGER EXCAVATIONS. THE PLATE TAMP METHOD SHALL NOT BE USED.
6. ALL APPROVED CASTINGS SHALL BE SET FLUSH TO GRADE AND SUPPORTED IF APPLICABLE.
7. ABC BASE AND SUBBASE COMPACTED TO 98% AND BACKFILL AND EMBEDMENT COMPACTED TO 90% AS DETERMINED BY THE MODIFIED PROCTOR AASHTO METHOD T–99.
8. 1–FOOT CUTBACKS OF ASPHALT SHALL BE PREPARED ON UNDISTURBED SOIL. MINIMUM ASPHALT DENSITY IS 90%.

PAVEMENT REPAIR WHERE PIPE INSTALLED

(FOR PRIVATE ROADS AND PAVED AREAS; CONTRACTOR TO MEET MIN. REQUIREMENTS AS DEFINED BY RIGHT-OF-WAY OWNER FOR PUBLIC ROAD REPAIRS)

NOT TO SCALE

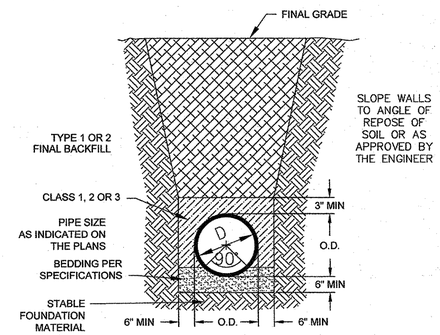

CL 50 DUCTILE IRON
DR 18 PVC
PIPE TRENCH DETAIL

NOT TO SCALE

NOTE:
PAVEMENT WIDTH AND LOCATION IN R/W VARIES. SEE PLAN FOR INDIVIDUAL LOCATION.

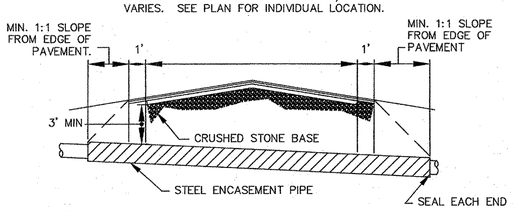

NOTES:
1. CASING WILL BE INSTALLED AT LINE AND GRADE SHOWN ON INDIVIDUAL PROFILE FOR EACH CROSSING. BORING/JACKING TO LINE AND GRADE IS REQUIRED.
2. TRACER WIRE SHALL BE CONTINUED THROUGH CASING

TYPICAL BORING/JACKING DETAIL

NOT TO SCALE

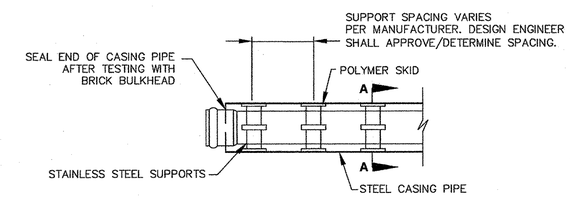

NOTE: PIPE SUPPORT TO BE PLACED TO PROVIDE PROPER SUPPORT, ALIGNMENT, AND GRADE AS SPECIFIED. CONTINUOUS SUPPORTS MAY BE USED AS ALTERNATIVE. OIL, GREASE, OR PETROLEUM PRODUCT MAY NOT BE USED AS LUBRICANT.

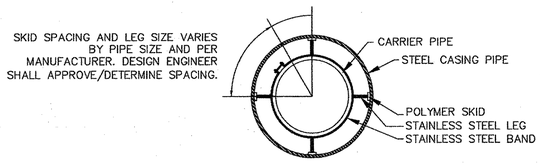

SECTION A-A

NOT TO SCALE

PIPE CASING SUPPORT DETAIL

NOT TO SCALE

RECEIVED
DEC 1 1 2012
PLANNING DIVISION

GENERAL NOTES:

1. NO EXCAVATED MATERIAL SHALL BE PLACED IN ANY STREAM, DITCH OR DRAINAGE-WAY.
2. THE CONTRACTOR IS RESPONSIBLE FOR LOCATING ALL UNDERGROUND UTILITIES BEFORE ANY CONSTRUCTION BEGINS.
3. THE CONTRACTOR IS RESPONSIBLE FOR TEMPORARY SEDIMENT AND EROSION CONTROL MEASURES WHILE CONSTRUCTION IS IN PROGRESS.
4. THE CONTRACTOR IS RESPONSIBLE FOR STABILIZATION OF ALL DISTURBED AREAS.
5. THE CONTRACTOR IS RESPONSIBLE FOR LAY DOWN & STOCKPILE AREAS (TO ARRANGE AND INSURE COMPLIANCE WITH ALL LOCAL AND STATE REGULATIONS).

THE DETAILS SHOWN HEREON SUPERCEDE CFPUA WRITTEN TECHNICAL SPECIFICATIONS VERSIONS 1.00 - 1.04

REV:	DESCRIPTION:	DATE:

01/09/12
NORTH CAROLINA PROFESSIONAL SEAL 028179 ENGINEER JACK DAVID REEL

SANITARY SEWER STANDARD DETAILS

SANITARY SEWER STANDARD DETAILS
SS-2

CAPE FEAR PUBLIC UTILITY AUTHORITY
235 GOVERNMENT CENTER DRIVE
WILMINGTON, NC 28403
OFFICE: (910)332-6560
Stewardship. Sustainability. Service.

DATE: 1/9/12
SCALE: N/A
DRAWN BY: CFPUA
CHECKED BY: CFPUA
PROJECT NO. :

SHEET NO: 2/4

R:\Engineer\Design\cad files for details\Standard Details\CFPUA Standard Details\CFPUA-Sewer Details.dwg, 1/9/2012 5:00:11 PM, 1:1

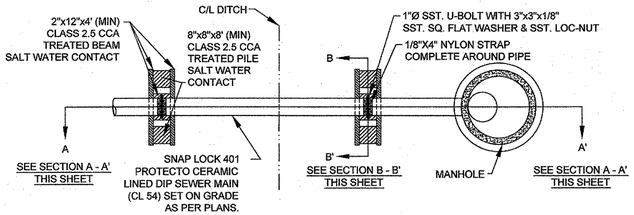

NOTES:

(1) PILES AND PILE DRIVING SHALL CONFORM TO NCDOT STANDARD SPECIFICATIONS FOR ROADS AND STRUCTURES, JANUARY 2002, SECTIONS 445, 450, 1082-2 & 1084-2

(2) CENTERLINE OF BOLTS TO BE A MINIMUM OF 3" FROM OUTSIDE EDGE OF TIMBER. BOLTS TO BE A MINIMUM OF 3" CENTERLINE TO CENTERLINE

(3) ALL STAINLESS STEEL SHALL BE 316. STAINLESS STRAP TO BE COLD FORMED.

(4) PILE SHALL NOT OBSTRUCT FLOW OR CAUSE EROSION OF DITCH/STREAM BANK.

(5) MIN. CLASS 54 DIP-ENGINEER MUST DESIGN LOADING.

(6) DESIGN SHALL BE APPROVED BY CFPUA

PILE AND BENT

NOT TO SCALE

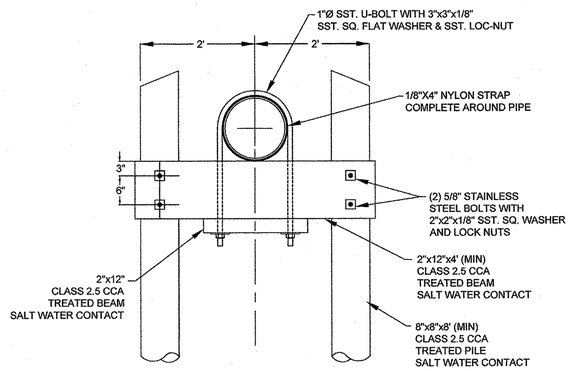

PILE AND BENT SECTION B - B'

NOT TO SCALE

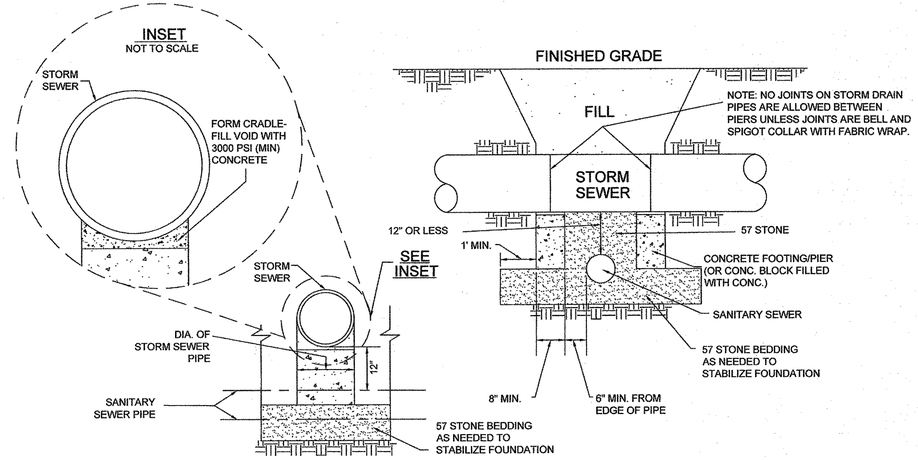

STRUCTURAL BRIDGING DETAIL FOR STORMWATER OVER GRAVITY SEWER INSTALLATIONS WITH LESS THAN 12" SEPARATION

NOT TO SCALE

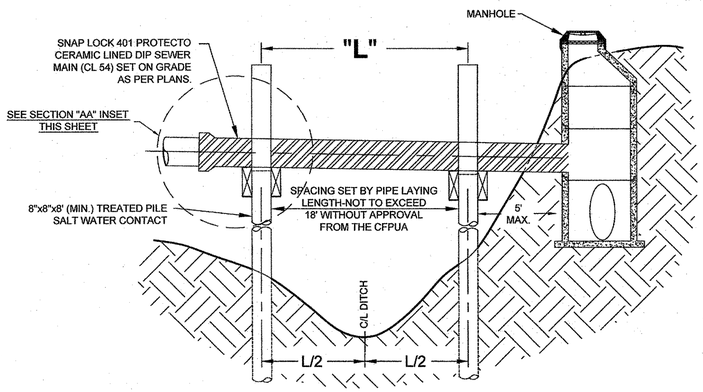

PILE AND BENT SECTION A - A'

NOT TO SCALE

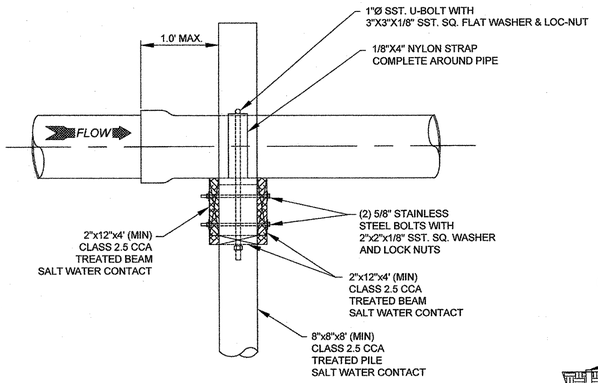

PILE AND BENT SECTION A - A' INSET

NOT TO SCALE

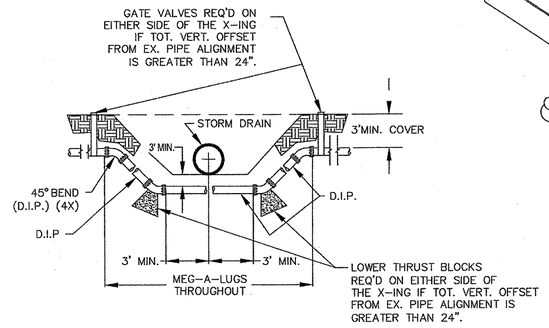

NOTE: USE D.I.P. (CL50 OR BETTER)

FORCE MAIN DITCH & STORM DRAIN CROSSING

NOT TO SCALE

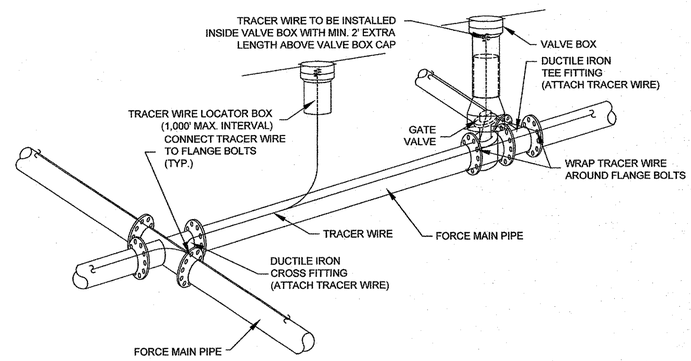

NOTES:
1. TRACER WIRE SHALL BE #10 COPPER SOLID CORE COPPER WIRE WITH GAS AND OIL RESISTANT INSULATION
2. WIRE SHALL BE STRAPPED TO ALL PVC FORCE MAIN PIPING WITH DUCT TAPE AT 12-FT. INTERVALS.
3. SECURE WIRE TO ALL TEE AND CROSS FITTINGS.
4. ALL WIRE SPLICES SHALL HAVE WATER PROOF WIRE CONNECTIONS.

TRACER WIRE DETAIL

NOT TO SCALE

RECEIVED
DEC 11 2012
PLANNING DIVISION

GENERAL NOTES:

1. NO EXCAVATED MATERIAL SHALL BE PLACED IN ANY STREAM, DITCH OR DRAINAGE-WAY.
2. THE CONTRACTOR IS RESPONSIBLE FOR LOCATING ALL UNDERGROUND UTILITIES BEFORE ANY CONSTRUCTION BEGINS.
3. THE CONTRACTOR IS RESPONSIBLE FOR TEMPORARY SEDIMENT AND EROSION CONTROL MEASURES WHILE CONSTRUCTION IS IN PROGRESS.
4. THE CONTRACTOR IS RESPONSIBLE FOR STABILIZATION OF ALL DISTURBED AREAS.
5. THE CONTRACTOR IS RESPONSIBLE FOR LAY DOWN & STOCKPILE AREAS (TO ARRANGE AND INSURE COMPLIANCE WITH ALL LOCAL AND STATE REGULATIONS).

THE DETAILS SHOWN HEREON SUPERCEDE CFPUA WRITTEN TECHNICAL SPECIFICATIONS VERSIONS 1.00 - 1.04

REV:	DESCRIPTION:	DATE:

NORTH CAROLINA PROFESSIONAL SEAL 028179 ENGINEER JACK DOUGLAS REEL

SANITARY SEWER STANDARD DETAILS

SANITARY SEWER STANDARD DETAILS
SS-3

CAPE FEAR PUBLIC UTILITY AUTHORITY
235 GOVERNMENT CENTER DRIVE
WILMINGTON, NC 28403
OFFICE: (910)332-6560
Stewardship. Sustainability. Service.

DATE:	1/9/12
SCALE:	N/A
DRAWN BY:	CFPUA
CHECKED BY:	CFPUA
PROJECT NO.:	

SHEET NO: 3/4

R:\Engineers\Design\cad files for details\Standard Details\CFPUA Standard Details\CFPUA-Sewer Details.dwg, 1/9/2012 5:00:16 PM, 1:1

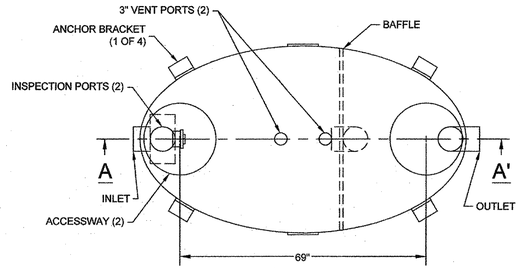

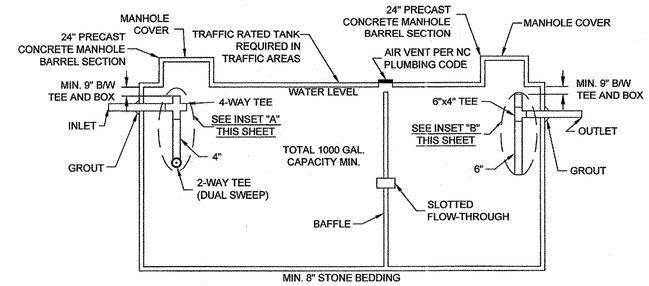

CONCRETE GREASE INTERCEPTOR

NOT TO SCALE

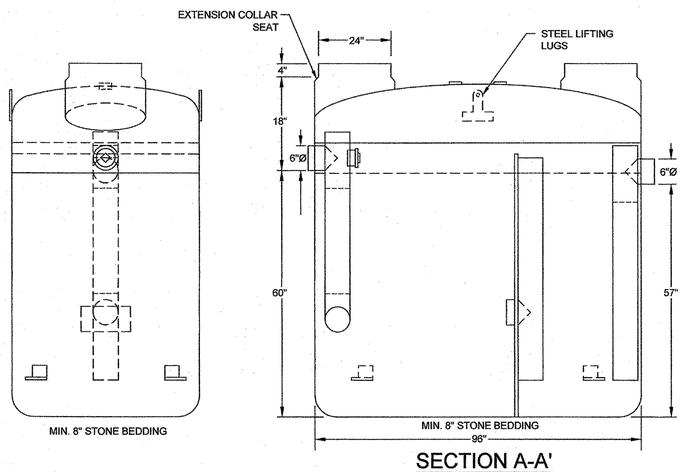

SECTION A-A'

NOTES:
1. FOR GRAVITY APPLICATIONS ONLY
2. MIN. THICKNESS: 1/4" WALL AND 3/8" TOP AND BOTTOM BOWLS
3. STANDARD PIPE STUBS ARE SOCKET SDR 35 PVC
4. EXTENSION COLLARS SHALL BE CAULKED WITH SIKAFLEX OR EQUIVALENT FOR WATERTIGHT SEAL
5. FOLLOW MANUFACTURE'S SPECS FOR TRAFFIC OR PEDESTRIAN LOADING

FIBERGLASS GREASE INTERCEPTOR

NOT TO SCALE

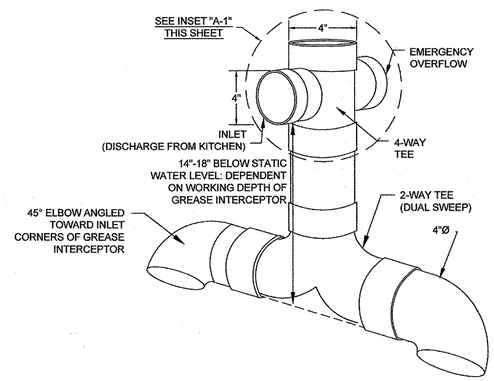

GREASE INTERCEPTOR INSET "A" 4" SANITARY TEE

NOT TO SCALE

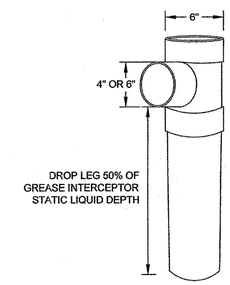

GREASE INTERCEPTOR INSET "B" 6" X 6" X 4" OUTLET SANITARY TEE

NOT TO SCALE

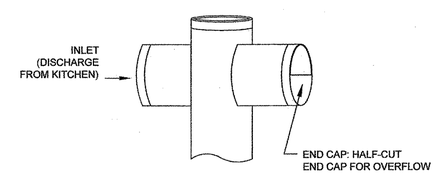

GREASE INTERCEPTOR INSET "A-1" EMERGENCY OVERFLOW CLOSE-UP

NOT TO SCALE

RECEIVED
DEC 1 1 2012
PLANNING DIVISION

GENERAL NOTES:

1. NO EXCAVATED MATERIAL SHALL BE PLACED IN ANY STREAM, DITCH OR DRAINAGE-WAY.
2. THE CONTRACTOR IS RESPONSIBLE FOR LOCATING ALL UNDERGROUND UTILITIES BEFORE ANY CONSTRUCTION BEGINS.
3. THE CONTRACTOR IS RESPONSIBLE FOR TEMPORARY SEDIMENT AND EROSION CONTROL MEASURES WHILE CONSTRUCTION IS IN PROGRESS.
4. THE CONTRACTOR IS RESPONSIBLE FOR STABILIZATION OF ALL DISTURBED AREAS.
5. THE CONTRACTOR IS RESPONSIBLE FOR LAY DOWN & STOCKPILE AREAS (TO ARRANGE AND INSURE COMPLIANCE WITH ALL LOCAL AND STATE REGULATIONS).

THE DETAILS SHOWN HEREON SUPERCEDE CFPUA WRITTEN TECHNICAL SPECIFICATIONS VERSIONS 1.00 - 1.04

REV:	DESCRIPTION:	DATE:

NORTH CAROLINA PROFESSIONAL SEAL 028179 ENGINEER JACK DAVID REEL
01/03/12

SANITARY SEWER STANDARD DETAILS

SANITARY SEWER STANDARD DETAILS
SS-4

CAPE FEAR PUBLIC UTILITY AUTHORITY
235 GOVERNMENT CENTER DRIVE
WILMINGTON, NC 28403
OFFICE: (910)332-6560
Stewardship. Sustainability. Service.

DATE:	1/9/12
SCALE:	N/A
DRAWN BY:	CFPUA
CHECKED BY:	CFPUA
PROJECT NO. :	
SHEET NO:	4 / 4

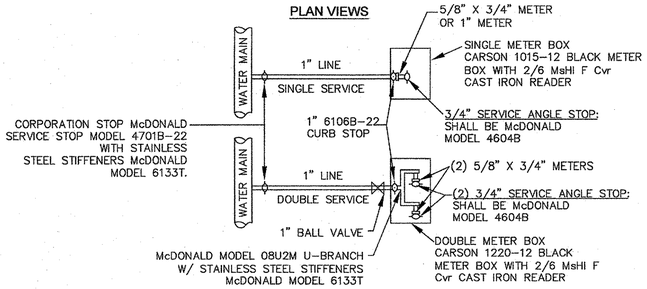

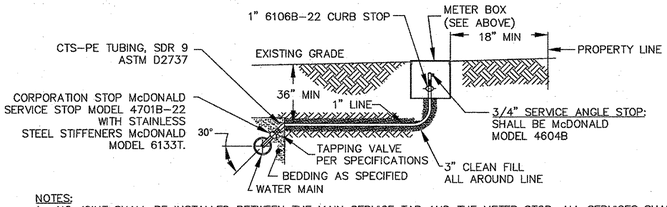

NOTES:
1. NO JOINT SHALL BE INSTALLED BETWEEN THE MAIN SERVICE TAP AND THE METER STOP. ALL SERVICES SHALL BE INSTALLED PERPENDICULAR TO MAIN.
2. SERVICE SADDLES ON PVC MAINS SHALL BE WIDE BAND BRASS BODY: SADDLE McDONALD 3801
3. METER BOXES SUSCEPTIBLE TO TRAFFIC SHALL CONFORM TO ASTM A48, CLASS 30B AND AASHTO H20 LOAD RATING STANDARDS (SIP MODEL 4240

SINGLE SERVICE SECTION VIEW

TYPICAL WATER SERVICE CONNECTION FOR RESIDENTIAL SINGLE FAMILY HOME ON CFPUA WATER SYSTEM

NOT TO SCALE

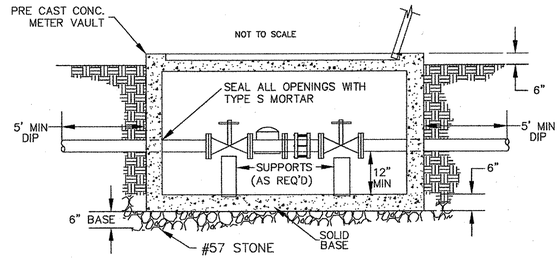

METER VAULT SECTION A-A

NOT TO SCALE

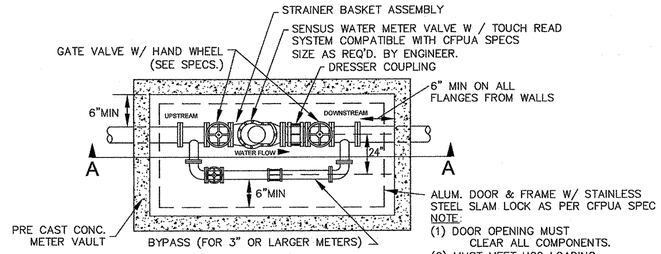

WATER METER VAULT

FOR WATER METERS LARGER THAN 2"

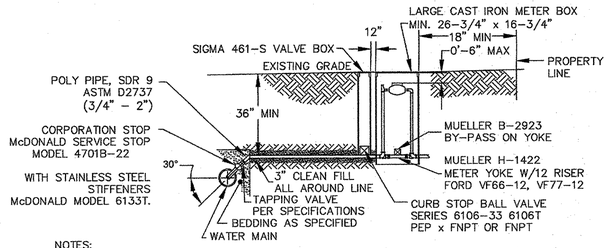

NOTES:
1. NO JOINT SHALL BE INSTALLED BETWEEN THE MAIN SERVICE TAP AND THE METER STOP. ALL SERVICES SHALL BE INSTALLED PERPENDICULAR TO MAIN.
2. SERVICE SADDLES ON PVC MAINS SHALL BE WIDE BAND BRASS BODY: SADDLE McDONALD 3801 OR EQUIVALENT
3. METER BOXES SUSCEPTIBLE TO TRAFFIC SHALL CONFORM TO ASTM A48, CLASS 30B AND AASHTO H20 LOAD RATING STANDARDS (SIP MODEL 4240

LARGE METER BOX

FOR 1 1/2" OR 2" WATER SERVICES

NOT TO SCALE

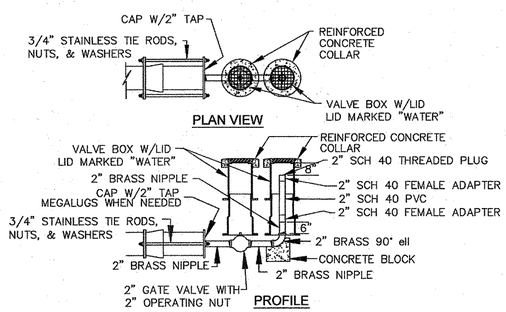

2" BLOW-OFF

NOT TO SCALE

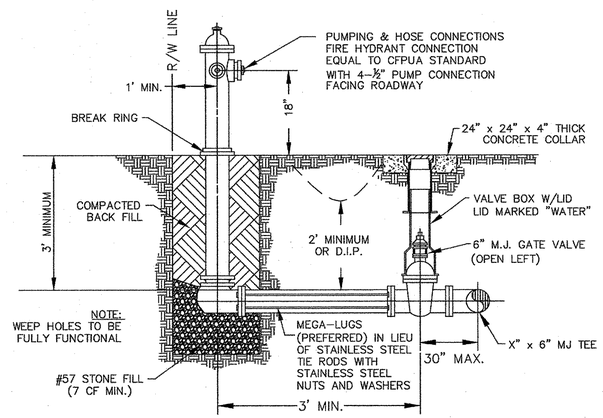

FIRE HYDRANT ASSEMBLY

NOT TO SCALE

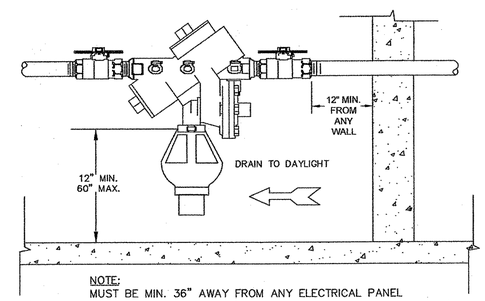

NOTE:
MUST BE MIN. 36" AWAY FROM ANY ELECTRICAL PANEL

INDOOR HORIZONTAL INSTALLATION

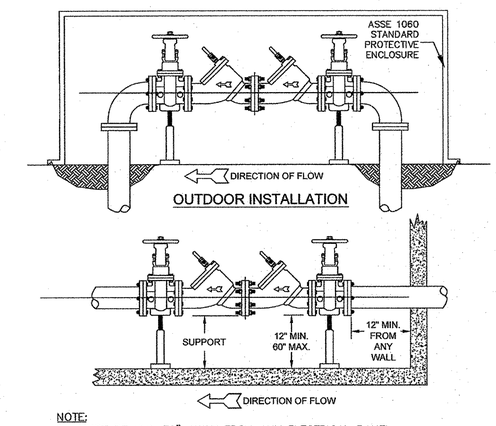

NOTE:
1. MUST BE MIN. 36" AWAY FROM ANY ELECTRICAL PANEL
2. VALVE REQ'D DOWNSTREAM OF BACKFLOW ASSEMBLY
3. VERTICAL INSTALLATION SHALL BE DESIGNED AND SUBMITTED TO CFPUA ESMD FOR APPROVAL

INDOOR INSTALLATION

DOUBLE CHECK VALVE ASSEMBLY

NOT TO SCALE

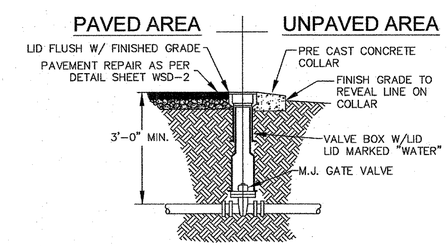

VALVE DETAIL

NOT TO SCALE

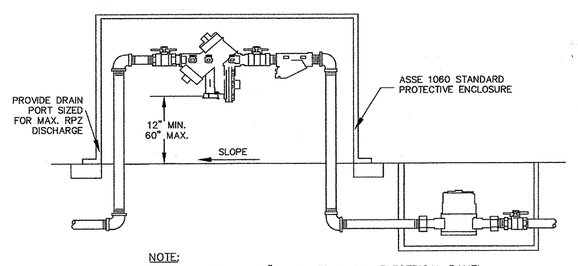

NOTE:
1. MUST BE MIN. 36" AWAY FROM ANY ELECTRICAL PANEL
2. VALVE REQ'D DOWNSTREAM OF BACKFLOW ASSEMBLY
3. VERTICAL INSTALLATION SHALL BE DESIGNED AND SUBMITTED TO CFPUA ESMD FOR APPROVAL

OUTDOOR HORIZONTAL INSTALLATION

REDUCED PRESSURE PRINCIPLE ASSEMBLY

NOT TO SCALE

RECEIVED
DEC 11 2012
PLANNING DIVISION

GENERAL NOTES:

1. NO EXCAVATED MATERIAL SHALL BE PLACED IN ANY STREAM, DITCH OR DRAINAGE-WAY.
2. THE CONTRACTOR IS RESPONSIBLE FOR LOCATING ALL UNDERGROUND UTILITIES BEFORE ANY CONSTRUCTION BEGINS.
3. THE CONTRACTOR IS RESPONSIBLE FOR TEMPORARY SEDIMENT AND EROSION CONTROL MEASURES WHILE CONSTRUCTION IS IN PROGRESS.
4. THE CONTRACTOR IS RESPONSIBLE FOR STABILIZATION OF ALL DISTURBED AREAS.
5. THE CONTRACTOR IS RESPONSIBLE FOR LAY DOWN & STOCKPILE AREAS (TO ARRANGE AND ENSURE COMPLIANCE WITH ALL LOCAL AND STATE REGULATIONS).

THE DETAILS SHOWN HEREON SUPERCEDE CFPUA WRITTEN TECHNICAL SPECIFICATIONS VERSIONS 1.00 - 1.04

REV:	DESCRIPTION:	DATE:

WATER DISTRIBUTION SYSTEM STANDARD DETAILS

04/03/12
NORTH CAROLINA PROFESSIONAL SEAL 028179 ENGINEER JACK DAVID REEL

WATER STANDARD DETAILS
WSD-1

CAPE FEAR PUBLIC UTILITY AUTHORITY
235 GOVERNMENT CENTER DRIVE
WILMINGTON, NC 28403
OFFICE: (910)332-6560
Stewardship. Sustainability. Service.

DATE:	1/9/12
SCALE:	N/A
DRAWN BY:	CFPUA
CHECKED BY:	CFPUA
PROJECT NO.:	
SHEET NO:	1/2

R:\Engineers\Design\cad files for details\Standard Details\CFPUA Standard Details\CFPUA-Water Details.dwg, 1/9/2012 4:57:39 PM, 1:1

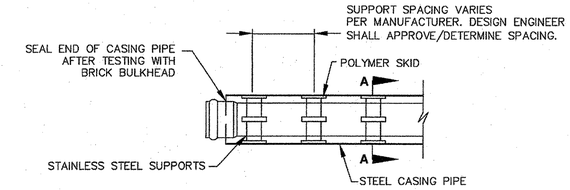

NOTE: PIPE SUPPORT TO BE PLACED TO PROVIDE PROPER SUPPORT, ALIGNMENT, AND GRADE AS SPECIFIED. CONTINUOUS SUPPORTS MAY BE USED AS ALTERNATIVE. OIL, GREASE, OR PETROLEUM PRODUCT MAY NOT BE USED AS LUBRICANT.

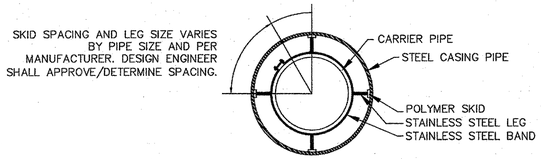

SECTION A-A

NOT TO SCALE

PIPE CASING SUPPORT DETAIL

NOT TO SCALE

NOTE:
PAVEMENT WIDTH AND LOCATION IN R/W VARIES. SEE PLAN FOR INDIVIDUAL LOCATION.

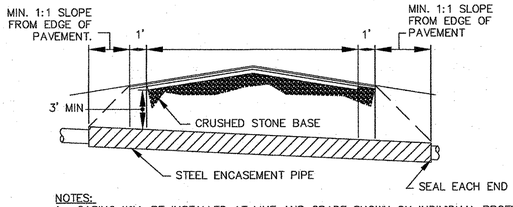

NOTES:
1. CASING WILL BE INSTALLED AT LINE AND GRADE SHOWN ON INDIVIDUAL PROFILE FOR EACH CROSSING. BORING/JACKING TO LINE AND GRADE IS REQUIRED.
2. TRACER WIRE SHALL BE CONTINUED THROUGH CASING

TYPICAL BORING/JACKING DETAIL

NOT TO SCALE

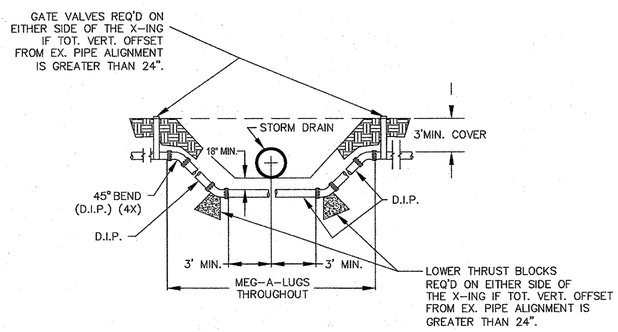

NOTE: USE D.I.P. (CL50 OR BETTER)

WATER MAIN DITCH & STORM DRAIN CROSSING

NOT TO SCALE

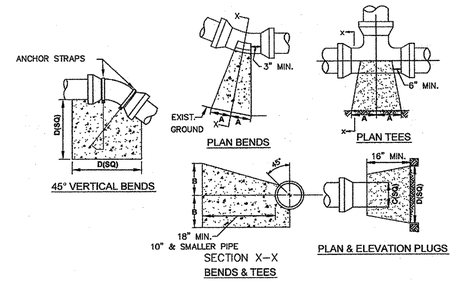

SIZE	90° BENDS		45° BENDS		22 1/2° BENDS		TEES/PLUGS		45° VERT. BENDS
	A	B	A	B	A	B	A	B	
3"	8"	6"	5"	6"	3"	7"	6"	8"	27"
4"	8"	9"	5"	8"	3"	11"	6"	9"	28"
6"	14"	11"	9"	9"	8"	8"	12"	9"	36"
8"	16"	16"	12"	12"	10"	13"	14"	13"	42"
10"	18"	22"	15"	14"	14"	16"	18"	15"	50"
12"	20"	28"	18"	17"	16"	16"	22"	18"	62"
14"	26"	29"	21"	19"	18"	18"	26"	20"	72"
16"	33"	29"	25"	21"	20"	21"	32"	21"	83"
18"	40"	30"	28"	24"	22"	23"	36"	24"	88"

NOTES: 1. BASED ON 160 PSI TEST PRESSURE AND 2000 PSF SOIL BEARING CAPACITY.
2. ALL BEARING SURFACES TO BE CARRIED TO UNDISTURBED GROUND.
3. USE MEG-A-LUG (PREFERRED) IN LIEU OF BLOCKING AND RODDING.

THRUST BLOCK DETAIL

NOT TO SCALE

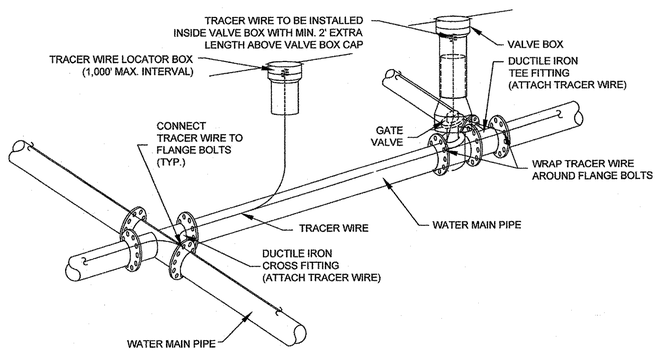

NOTES:
1. TRACER WIRE SHALL BE #10 COPPER SOLID CORE COPPER WIRE WITH GAS AND OIL RESISTANT INSULATION
2. WIRE SHALL BE STRAPPED TO ALL PVC WATER MAIN PIPING WITH DUCT TAPE AT 12-FT. INTERVALS.
3. SECURE WIRE TO ALL TEE AND CROSS FITTINGS.
4. ALL WIRE SPLICES SHALL HAVE WATER PROOF WIRE CONNECTIONS.

TRACER WIRE DETAIL

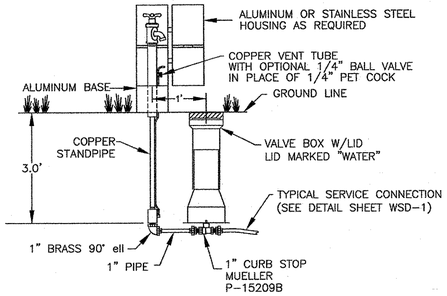

SAMPLING STATION

NOT TO SCALE

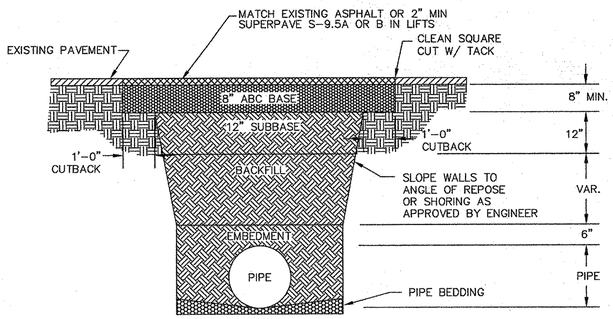

NOTES:
1. BACKFILL SHALL BE SUITABLE MATERIAL THAT IS FREE FROM HEAVY CLAY, GUMBOS, DEBRIS, ORGANICS AND LITTLE TO NO EXCESSIVE MOISTURE.
2. SELECT BACKFILL MAY BE SUBSTITUTED OR REQUIRED BY CITY TO ACHIEVE COMPACTION, (I.E. #57, ABC, CRUSHED LIMESTONE, CLEAN SAND, FLOWABLE FILL, ETC).
3. 8-INCH OF ABC BASE MATERIAL SHALL BE USED ON CITY STREETS.
4. BACKFILL AND BASE MATERIALS SHALL BE COMPACTED 12" MINIMUM LIFTS
5. SOIL SHALL BE COMPACTED BY A MECHANIZED TAMPER (I.E JUMPING JACK), HOWEVER, VIBRATORY ROLLERS > 18" WIDTH MAY BE USED FOR LARGER EXCAVATIONS. THE PLATE TAMP METHOD SHALL NOT BE USED.
6. ALL APPROVED CASTINGS SHALL BE SET FLUSH TO GRADE AND SUPPORTED IF APPLICABLE.
7. ABC BASE AND SUBBASE COMPACTED TO 98% AND BACKFILL AND EMBEDMENT COMPACTED TO 90% AS DETERMINED BY THE MODIFIED PROCTOR AASHTO METHOD T-99.
8. 1-FOOT CUTBACKS OF ASPHALT SHALL BE PREPARED ON UNDISTURBED SOIL. MINIMUM ASPHALT DENSITY IS 90%.

PAVEMENT REPAIR WHERE PIPE INSTALLED

(FOR PRIVATE ROADS AND PAVED AREAS;
CONTRACTOR TO MEET MIN. REQUIREMENTS AS DEFINED BY
RIGHT-OF-WAY OWNER FOR PUBLIC ROAD REPAIRS)

NOT TO SCALE

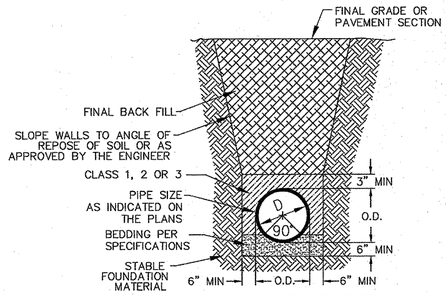

CL 50 DUCTILE IRON DR 18 PVC PIPE TRENCH DETAIL

NOT TO SCALE

RECEIVED
DEC 11 2012
PLANNING DIVISION

NOT TO SCALE

GENERAL NOTES:

1. NO EXCAVATED MATERIAL SHALL BE PLACED IN ANY STREAM, DITCH OR DRAINAGE-WAY.
2. THE CONTRACTOR IS RESPONSIBLE FOR LOCATING ALL UNDERGROUND UTILITIES BEFORE ANY CONSTRUCTION BEGINS.
3. THE CONTRACTOR IS RESPONSIBLE FOR TEMPORARY SEDIMENT AND EROSION CONTROL MEASURES WHILE CONSTRUCTION IS IN PROGRESS.
4. THE CONTRACTOR IS RESPONSIBLE FOR STABILIZATION OF ALL DISTURBED AREAS.
5. THE CONTRACTOR IS RESPONSIBLE FOR LAY DOWN & STOCKPILE AREAS (TO ARRANGE AND ENSURE COMPLIANCE WITH ALL LOCAL AND STATE REGULATIONS).

THE DETAILS SHOWN HEREON SUPERCEDE CFPUA WRITTEN TECHNICAL SPECIFICATIONS VERSIONS 1.00 - 1.04

REV:	DESCRIPTION:	DATE:

01/03/12
NORTH CAROLINA PROFESSIONAL SEAL 028179 ENGINEER JACK DAVID REEL

WATER DISTRIBUTION SYSTEM STANDARD DETAILS

WATER STANDARD DETAILS
WSD-2

CAPE FEAR PUBLIC UTILITY AUTHORITY
235 GOVERNMENT CENTER DRIVE
WILMINGTON, NC 28403
OFFICE: (910)332-6560
Stewardship. Sustainability. Service.

DATE: 1/9/12
SCALE: N/A
DRAWN BY: CFPUA
CHECKED BY: CFPUA
PROJECT NO.:

SHEET NO: 2/2

R:\Engineers\Design\cad files for details\Standard Details\CFPUA Standard Details\CFPUA-Water Details.dwg, 1/9/2012 4:57:48 PM, 1:1

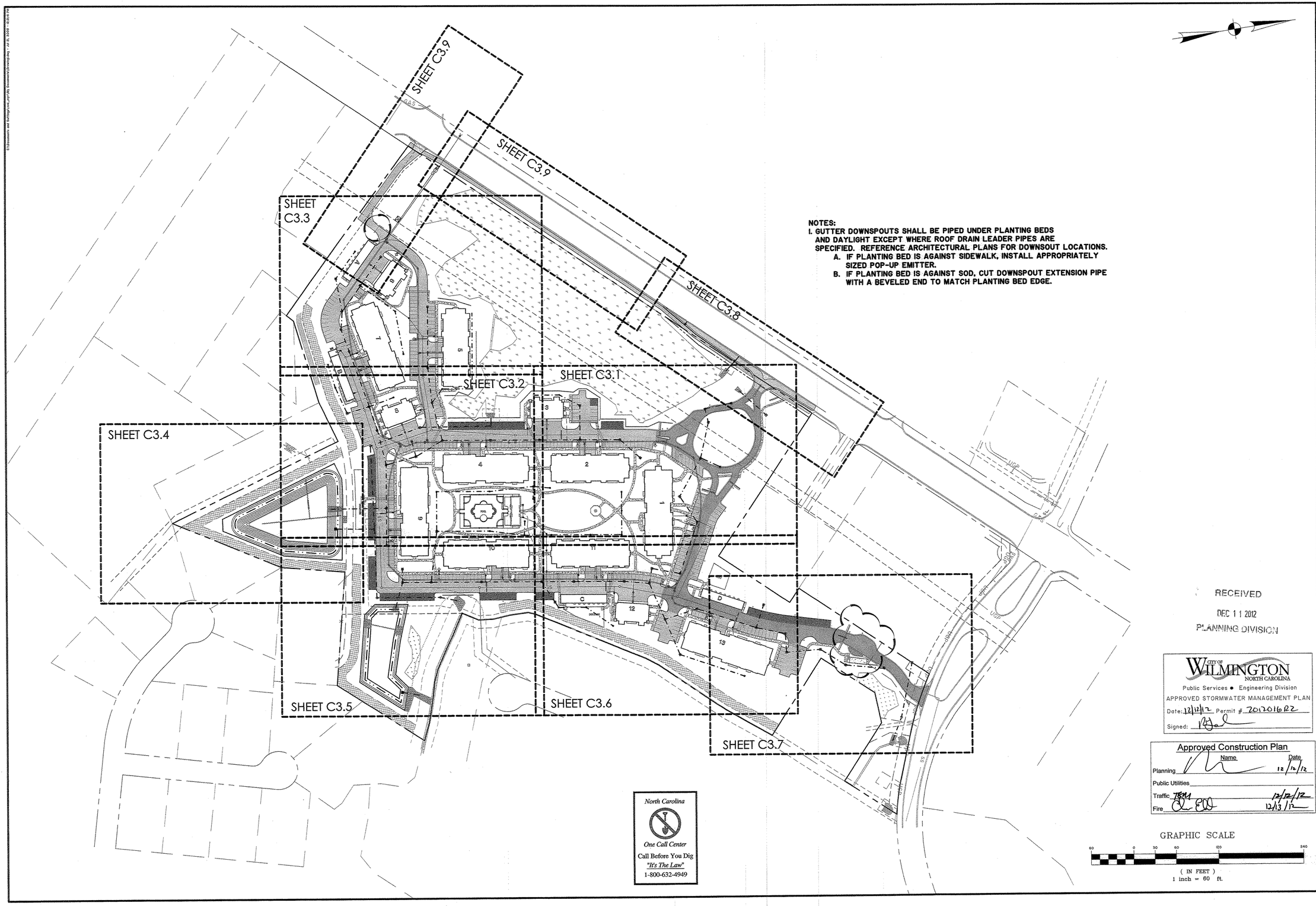

NOTES:
1. GUTTER DOWNSPOUTS SHALL BE PIPED UNDER PLANTING BEDS AND DAYLIGHT EXCEPT WHERE ROOF DRAIN LEADER PIPES ARE SPECIFIED. REFERENCE ARCHITECTURAL PLANS FOR DOWNSOUT LOCATIONS.
   A. IF PLANTING BED IS AGAINST SIDEWALK, INSTALL APPROPRIATELY SIZED POP-UP EMITTER.
   B. IF PLANTING BED IS AGAINST SOD, CUT DOWNSPOUT EXTENSION PIPE WITH A BEVELED END TO MATCH PLANTING BED EDGE.

RECEIVED
DEC 11 2012
PLANNING DIVISION

CITY OF WILMINGTON NORTH CAROLINA
Public Services • Engineering Division
APPROVED STORMWATER MANAGEMENT PLAN
Date: 12/12/12 Permit # 2012016R2
Signed:

Approved Construction Plan

	Name	Date
Planning		12/12/12
Public Utilities		
Traffic	TGM	12/12/12
Fire		12/13/12

North Carolina
One Call Center
Call Before You Dig
"It's The Law"
1-800-632-4949

NO.	REVISIONS	BY	DATE
14	SEE REVISION SUMMARY ON SHEET G1.0	BDR	12/05/12
12	ADD PREVIOUS REVISION NOTES	BDR	08/27/12
11	SEE REVISION SUMMARY ON SHEET G1.0	BDR	08/07/12
10	SEE REVISION SUMMARY ON SHEET G1.0	BDR	07/24/12
9	SEE REVISION SUMMARY ON SHEET G1.0	BDR	07/20/12
4	SEE REVISION SUMMARY ON SHEET G1.0	BDR	04/23/12
1	SEE REVISION SUMMARY ON SHEET G1.0	BDR	01/25/12

NORTH CAROLINA PROFESSIONAL SEAL — THOMAS & HUTTON ENGINEERING CO. No. F-0891 — NOLYN BRANCH III — CERTIFICATE OF AUTHORIZATION

NORTH CAROLINA PROFESSIONAL SEAL — 26179 — ENGINEER — JACK D. REGISTER — 12/05/12

THOMAS & HUTTON
Engineering | Surveying | Planning | GIS | Consulting
215 South Kerr Avenue • Unit B
Wilmington, NC 28403 • 910.332.3360
www.thomasandhutton.com
Savannah, GA | Brunswick, GA | Charleston, SC | Myrtle Beach, SC

FLOURNOY DEVELOPMENT COMPANY
NEW HANOVER COUNTY, NC

AMBERLEIGH SHORES

GRADING AND DRAINAGE OVERALL PLAN

JOB NO:	J-22667
DATE:	8/15/11
DRAWN:	BDR
DESIGNED:	BDR
REVIEWED:	JDR
APPROVED:	JDR
SCALE:	1" = 100'

C3.0

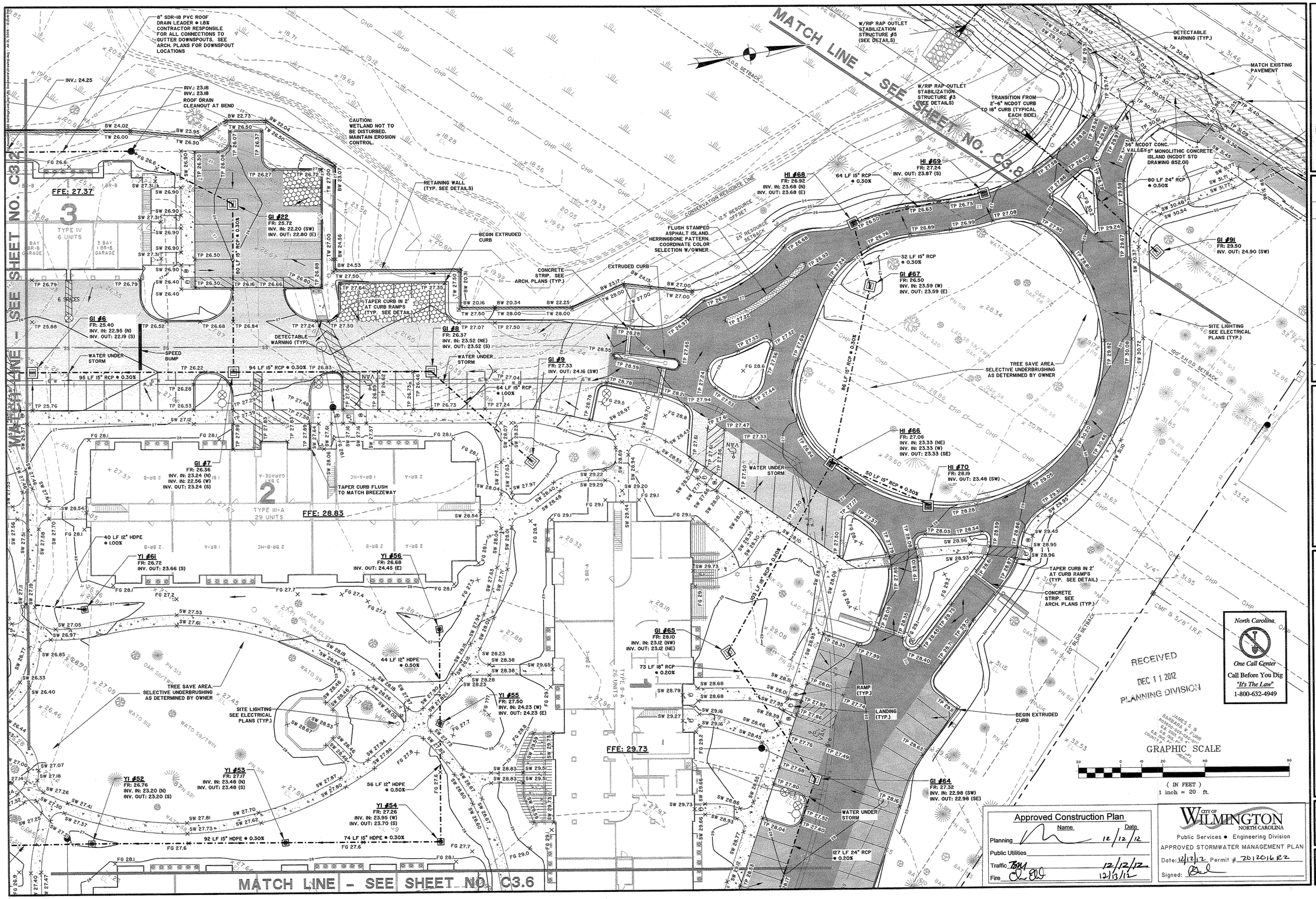

North Carolina
One Call Center
Call Before You Dig
"It's The Law"
1-800-632-4949

Approved Construction Plan		
	Name	Date
Planning		12/12/12
Public Utilities		
Traffic		12/12/12
Fire		12/13/12

CITY OF WILMINGTON NORTH CAROLINA
Public Services • Engineering Division
APPROVED STORMWATER MANAGEMENT PLAN
Date: 12/12/12 Permit # 201201682
Signed:

NO.	REVISIONS	BY	DATE
12	ADD PREVIOUS REVISION NOTES	BDR	08/27/12
11	CHANGE 2 PARKING SPACES TO PERVIOUS AT BLDG 3.	BDR	08/07/12
10	SEE REVISION SUMMARY ON SHEET G.0	BDR	07/24/12
6	SEE REVISION SUMMARY ON SHEET G.0	BDR	05/18/12
4	SEE REVISION SUMMARY ON SHEET G.0	BDR	04/23/12
1	SEE REVISION SUMMARY ON SHEET G.0	BDR	02/25/12

NORTH CAROLINA PROFESSIONAL ENGINEER SEAL 019879 JACK D. REDWINE
THOMAS & HUTTON ENGINEERING CO. NORTH CAROLINA CERTIFICATE OF AUTHORITY No. F-0871
8/27/12

THOMAS & HUTTON
Engineering | Surveying | Planning | GIS | Consulting
215 South Kerr Avenue • Unit B
Wilmington, NC 28403 • 910.332.3360
www.thomasandhutton.com
Savannah, GA | Brunswick, GA | Charleston, SC | Myrtle Beach, SC

FLOURNOY DEVELOPMENT COMPANY

NEW HANOVER COUNTY, NC

AMBERLEIGH SHORES

GRADING AND DRAINAGE PLAN

JOB NO:	J-22667
DATE:	11/15/11
DRAWN:	BDR
DESIGNED:	BDR
REVIEWED:	JDR
APPROVED:	JDR
SCALE:	1" = 20'

C3.1

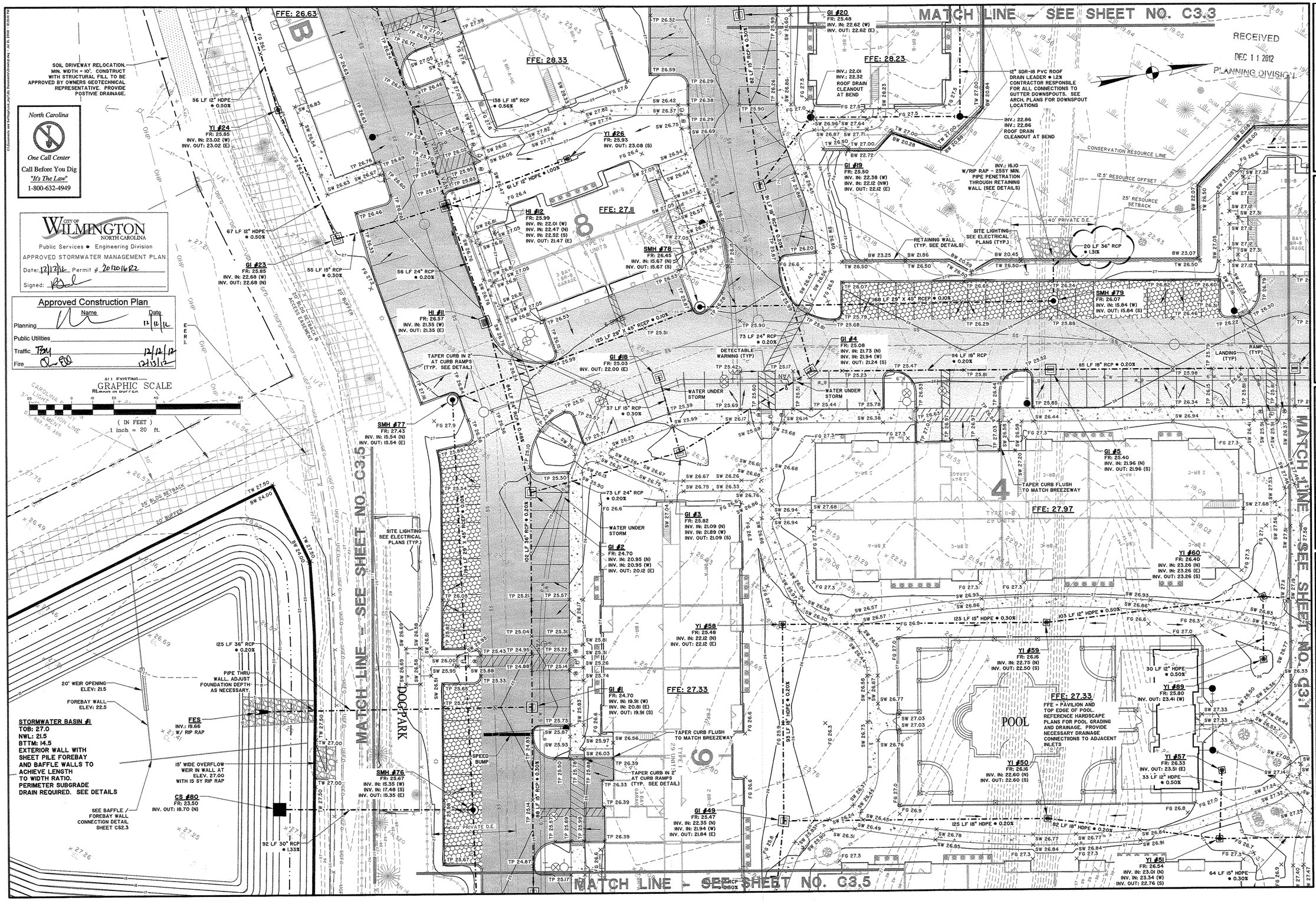

NORTH CAROLINA PROFESSIONAL SEAL ENGINEERING THOMAS & HUTTON ENGINEERING CO. No. C-0987 CERTIFICATE OF AUTHORIZATION

NORTH CAROLINA PROFESSIONAL SEAL 19863 ENGINEER JOHN D. RIVERS

12/05/12

NO.	REVISIONS	BY	DATE
14	REVISE INLET PIPE TO SMH#79 TO 36" CIRCULAR	BDR	12/05/12
13	ADD PREVIOUS REVISION NOTES	BDR	09/27/12
12	SEE REVISION SUMMARY ON SHEET 6.0	BDR	07/24/12
10	RELOCATE SMH#78 / ADD D.E. TO ELLIPTICAL PIPE	BDR	04/23/12
5	SEE REVISION SUMMARY ON SHEET 9.0	BDR	04/23/12
1	SEE REVISION SUMMARY ON SHEET 9.0	BDR	01/23/12

THOMAS & HUTTON
Engineering | Surveying | Planning | GIS | Consulting
215 South Kerr Avenue • Unit B
Wilmington, NC 28403 • 910.332.3360
www.thomasandhutton.com
Savannah, GA | Brunswick, GA | Charleston, SC | Myrtle Beach, SC

FLOURNOY DEVELOPMENT COMPANY

NEW HANOVER COUNTY, NC

AMBERLEIGH SHORES

GRADING AND DRAINAGE PLAN

JOB NO:	J-22667
DATE:	11/15/11
DRAWN:	BDR
DESIGNED:	BDR
REVIEWED:	JDR
APPROVED:	JDR
SCALE:	1" = 20'

C3.2

RECEIVED
DEC 11 2012
PLANNING DIVISION

North Carolina
One Call Center
Call Before You Dig
"It's The Law"
1-800-632-4949

CITY OF WILMINGTON NORTH CAROLINA
Public Services • Engineering Division
APPROVED STORMWATER MANAGEMENT PLAN
Date: 12/12/12 Permit # 2012016123
Signed: RZyal

Approved Construction Plan

	Name	Date
Planning		12/12/12
Public Utilities		
Traffic	TGM	12/12/12
Fire		12/13/12

NO.	REVISIONS	BY	DATE
14	DELETE CONCRETE STRIP AT EMERGENCY GATE	BDR	12/05/12
12	ADD PREVIOUS REVISION NOTES	BDR	08/27/12
10	SEE REVISION SUMMARY ON SHEET G.0	BDR	07/24/12
4	SEE REVISION SUMMARY ON SHEET G.0	BDR	04/23/12
1	SEE REVISION SUMMARY ON SHEET G.0	BDR	01/25/12

NORTH CAROLINA PROFESSIONAL ENGINEER SEAL 22178 JACK D. RECTOR
12/05/12

NORTH CAROLINA PROFESSIONAL ENGINEERING CORPORATE CERTIFICATE
THOMAS & HUTTON ENGINEERING CO. No. F-0891

THOMAS & HUTTON
Engineering | Surveying | Planning | GIS | Consulting
215 South Kerr Avenue • Unit B
Wilmington, NC 28403 • 910.332.3360
www.thomasandhutton.com
Savannah, GA | Brunswick, GA | Charleston, SC | Myrtle Beach, SC

FLOURNOY DEVELOPMENT COMPANY
NEW HANOVER COUNTY, NC

AMBERLEIGH SHORES

GRADING AND DRAINAGE PLAN

JOB NO:	J-22667
DATE:	11/15/11
DRAWN:	BDR
DESIGNED:	BDR
REVIEWED:	JDR
APPROVED:	JDR
SCALE:	########

C3.3

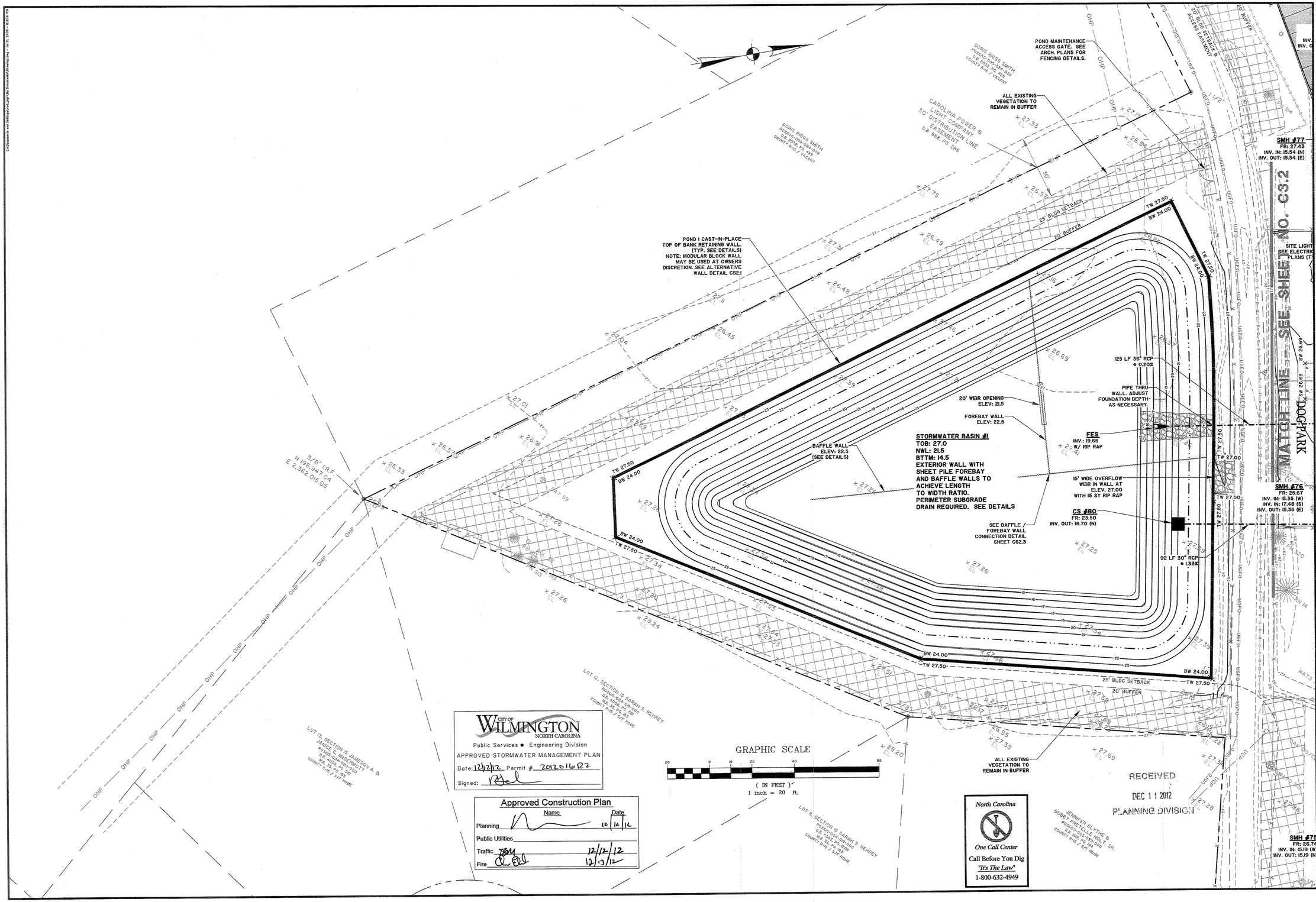

CITY OF WILMINGTON NORTH CAROLINA
Public Services • Engineering Division
APPROVED STORMWATER MANAGEMENT PLAN
Date: 12/12/12 Permit # 2012016R2
Signed:

Approved Construction Plan

	Name	Date
Planning		12/12/12
Public Utilities		
Traffic		12/12/12
Fire		12/13/12

NORTH CAROLINA PROFESSIONAL ENGINEER SEAL 28719 JACK D. REED
THOMAS & HUTTON ENGINEERING CO. No. F-0871 CERTIFICATE OF AUTHORIZATION

NO.	REVISIONS	BY	DATE
12	ADD PREVIOUS REVISION NOTES	BDR	08/27/12
4	SEE REVISION SUMMARY ON SHEET G1.0	BDR	04/23/12
1	SEE REVISION SUMMARY ON SHEET G1.0	BDR	01/25/12

THOMAS & HUTTON
Engineering | Surveying | Planning | GIS | Consulting
215 South Kerr Avenue • Unit B
Wilmington, NC 28403 • 910.332.3360
www.thomasandhutton.com
Savannah, GA | Brunswick, GA | Charleston, SC | Myrtle Beach, SC

FLOURNOY DEVELOPMENT COMPANY
NEW HANOVER COUNTY, NC

AMBERLEIGH SHORES
GRADING AND DRAINAGE PLAN

JOB NO:	J-22667
DATE:	11/15/11
DRAWN:	BDR
DESIGNED:	BDR
REVIEWED:	JDR
APPROVED:	JDR
SCALE:	1" = 20'

C3.4

MATCH LINE - SEE SHEET NO. C3.2

MATCH LINE - SEE SHEET NO. C3.6

121 LF 24" RCP ● 0.30%

FFE: 27.33

GI #10
FR: 24.70
INV. OUT: 21.08 (W)

GI #88
FR: 25.50
INV. OUT: 22.89 (E)

FFE: 27.97

TAPER CURB FLUSH TO MATCH BREEZEWAY

TREE SAVE AREA. SELECTIVE UNDERBRUSHING AS DETERMINED BY OWNER

LANDING (TYP.)

RAMP (TYP.)

Y1 #51
FR: 26.54
INV. IN: 23.01 (N)
INV. IN: 23.34 (W)
INV. OUT: 22.76 (S)

64 LF 15" HDPE ● 0.30%

TAPER CURB IN 2' AT CURB RAMPS (TYP. SEE DETAIL)

ALL EXISTING VEGETATION TO REMAIN IN BUFFER

25' BLDG SETBACK

20' BUFFER

40' PRIVATE D.E.

32 LF 15" RCP ● 2.00%

WATER UNDER STORM

68 LF 42" RCP ● 0.20%

119 LF 36" RCP ● 0.20%

142 LF 36" RCP ● 0.20%

DETECTABLE WARNING STRIP (TYP.)

SPEED BUMP

GI #31
FR: 25.20
INV. IN: 19.71 (N)
INV. IN: 22.25 (W)
INV. OUT: 19.71 (SE)

GI #32
FR: 25.20
INV. IN: 20.05 (N)
INV. IN: 21.48 (W)
INV. OUT: 19.85 (S)

GI #33
FR: 25.20
INV. IN: 20.28 (N)
INV. OUT: 20.28 (S)

SITE LIGHTING SEE ELECTRICAL PLANS (TYP.)

SMH #75
FR: 26.74
INV. IN: 15.19 (W)
INV. OUT: 15.19 (N)

150 LF 29" X 45" RCEP ● 0.10%

JENNIFER BLYTHE & BOBBY PIRE ELLIS, HOLT ROSCOE-DEED 2000 PG 1254 PIN 3-0-24 COUNTY R-15 / S/F HOME

POND MAINTENANCE ACCESS GATE. SEE ARCH. PLANS FOR FENCING DETAILS.

PIPE THRU WALL. ADJUST FOUNDATION DEPTH AS NECESSARY.

FES
INV.: 19.60
W/RIP RAP

FOREBAY WALL: 19.50 SEE CONNECTION DETAIL TO C.I.P WALL ON SHEET CS2.3

RIP RAP TYP. EACH END OF FOREBAY WALL

STORMWATER BASIN #2
TOB: 24.0
NWL: 17.5
BTTM: 9.5
EXTERIOR & INTERIOR WALLS W/SHEET PILE FOREBAY WALL

POND 2 CAST IN PLACE INTERIOR RETAINING WALL. (TYP. SEE DETAILS)

SMH #74
FR: 26.17
INV. IN: 15.04 (S)
INV. OUT: 15.04 (N)

34 LF 36" RCP ● 0.11%

FES
INV.: 15.00
W/RIP RAP OUTLET STABILIZATION STRUCTURE #1 (SEE DETAILS)

POND 2 CAST-IN-PLACE TOP OF BANK RETAINING WALL. (TYP. SEE DETAILS)
NOTE: MODULAR BLOCK WALL MAY BE USED AT OWNERS DISCRETION ON EASTERN, WESTERN & SOUTHERN SIDES. SEE ALTERNATIVE WALL DETAIL ON CS2.1 & TRANSITION DETAIL ON SHEET CS3.1

CAUTION: WETLAND NOT TO BE DISTURBED. MAINTAIN EROSION CONTROL.

50' STREAM SETBACK

25' BLDG SETBACK

50' DRAINAGE EASEMENT

36 LF 36" RCP ● 0.84%

FES
INV.: 16.00
W/RIP RAP OUTLET STABILIZATION STRUCTURE #2 (SEE DETAILS)

55' WIDE OVERFLOW WEIR IN WALL AT ELEV. 23.60 W/ RIP RAP AS SHOWN

CS #81
FR: 23.10
INV. OUT: 16.30 (N)

JAMES S. & PATRICIA L. MANGUM RCEDOC-PG-0210 P.B. 47-PG-136 COUNTY R-35 / S/F HOME

MARYMOUNT DRIVE
SR-2764
PUBLIC R/W
(WIDTH VARIES)

MARYMOUNT COMMON AREA TOWNHOMES HOA, INC. et al RCEDOC-PG-0235 P.B. 47-PG-136 COUNTY R-15

RECEIVED
DEC 11 2012
PLANNING DIVISION

North Carolina
One Call Center
Call Before You Dig
"It's The Law"
1-800-632-4949

GRAPHIC SCALE
(IN FEET)
1 inch = 20 ft.

Approved Construction Plan

	Name	Date
Planning		12/12/12
Public Utilities		
Traffic	TSM	12/12/12
Fire		12/13/12

CITY OF WILMINGTON NORTH CAROLINA
Public Services ● Engineering Division
APPROVED STORMWATER MANAGEMENT PLAN
Date: 12/12/12 Permit # 7012016 R2
Signed:

THOMAS & HUTTON Engineering | Surveying | Planning | GIS | Consulting
215 South Kerr Avenue • Unit B
Wilmington, NC 28403 • 910.332.3360
www.thomasandhutton.com
Savannah, GA | Brunswick, GA | Charleston, SC | Myrtle Beach, SC

NO.	DATE	BY	REVISIONS
14	12/05/12	BDR	REV. OUTLET PIPE FROM SMH#74 TO 36" CIRC./ADD FES
12	08/27/12	BDR	ADD PREVIOUS REVISION NOTES
5	04/23/12	BDR	ADD DRAINAGE EASEMENT TO ELLIPTICAL PIPE
4	04/23/12	BDR	SEE REVISION SUMMARY ON SHEET G1.0
1	01/25/12	BDR	SEE REVISION SUMMARY ON SHEET G1.0

FLOURNOY DEVELOPMENT COMPANY
NEW HANOVER COUNTY, NC

AMBERLEIGH SHORES

GRADING AND DRAINAGE PLAN

JOB NO:	J-22667
DATE:	11/15/11
DRAWN:	BDR
DESIGNED:	BDR
REVIEWED:	JDR
APPROVED:	JDR
SCALE:	1" = 19.9447'

C3.5

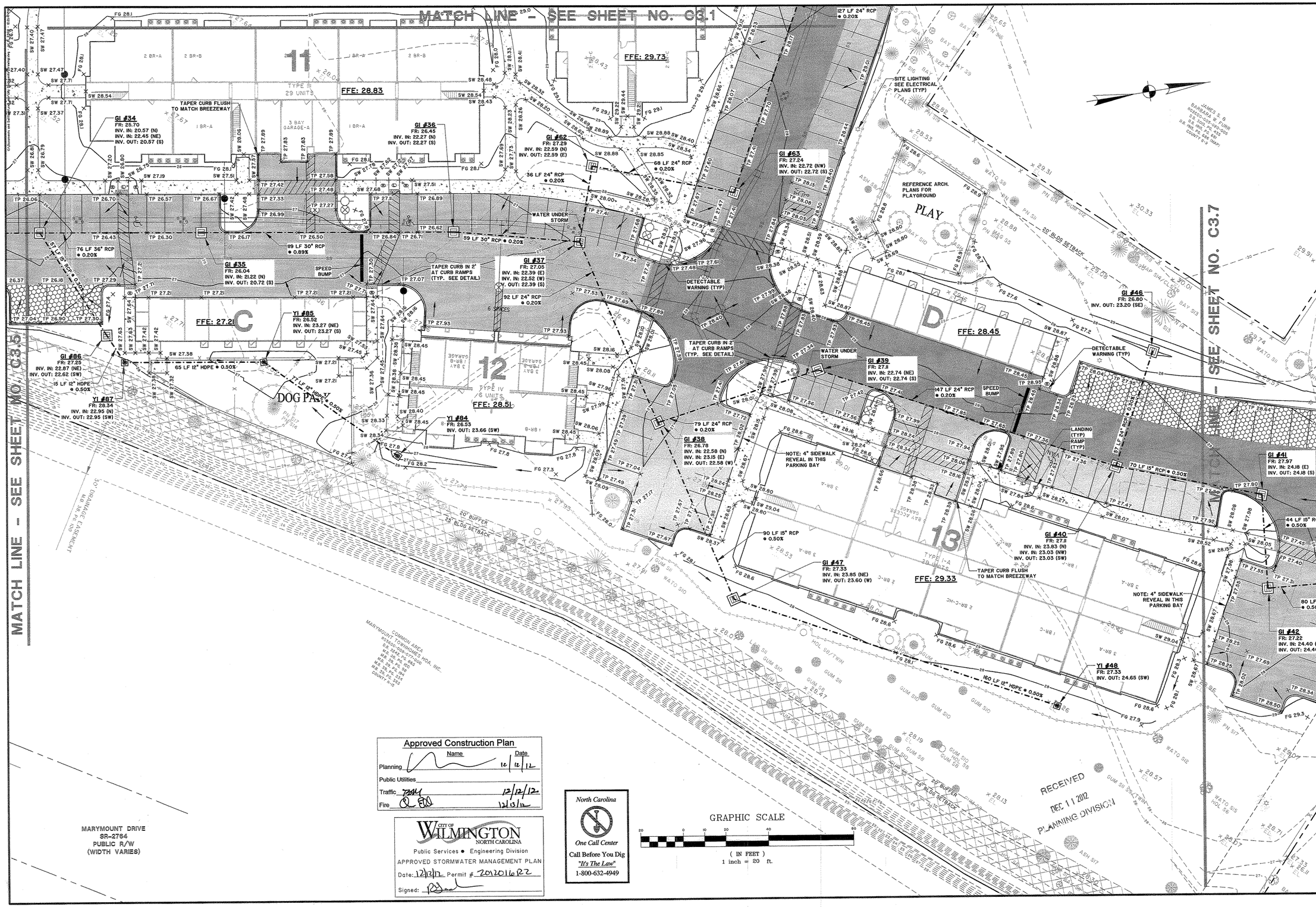

Approved Construction Plan

	Name	Date
Planning		12/12/12
Public Utilities		
Traffic		12/12/12
Fire		12/13/12

CITY OF WILMINGTON NORTH CAROLINA
Public Services • Engineering Division
APPROVED STORMWATER MANAGEMENT PLAN
Date: 12/12/12 Permit # 20120116R2
Signed:

North Carolina
One Call Center
Call Before You Dig
"It's The Law"
1-800-632-4949

GRAPHIC SCALE
20 0 10 20 40 80
(IN FEET)
1 inch = 20 ft.

NORTH CAROLINA PROFESSIONAL SEAL
THOMAS & HUTTON ENGINEERING CO.
CERTIFICATE OF AUTHORITY No. F-0891
NORTH CAROLINA PROFESSIONAL SEAL 019
BRIAN D. RIGGS
8/23/12

NO.	REVISIONS	BY	DATE
12	ADD PREVIOUS REVISION NOTES	BDR	08/27/12
4	SEE REVISION SUMMARY ON SHEET 9.0	BDR	04/23/12
1	SEE REVISION SUMMARY ON SHEET 9.0	BDR	01/25/12

THOMAS & HUTTON
Engineering | Surveying | Planning | GIS | Consulting
215 South Kerr Avenue • Unit B
Wilmington, NC 28403 • 910.332.3360
www.thomasandhutton.com
Savannah, GA | Brunswick, GA | Charleston, SC | Myrtle Beach, SC

FLOURNOY DEVELOPMENT COMPANY
NEW HANOVER COUNTY, INC
AMBERLEIGH SHORES
GRADING AND DRAINAGE PLAN

JOB NO:	J-22667
DATE:	8/15/11
DRAWN:	BDR
DESIGNED:	BDR
REVIEWED:	JDR
APPROVED:	JDR
SCALE:	1" = 19.9986'

C3.6