SITE DEVELOPMENT PLANS

OF

TACO BELL - FULTON STATION

WILMINGTON, NC

PREPARED FOR:

R & S MATTHEWS PROPERTIES, LLC

P.O. BOX 87886

FAYETTEVILLE, NC 28304

FEBRUARY 12, 2013

REVISED: MARCH 20, 2013

J-24078.0001

PREPARED BY:

THOMAS & HUTTON

Engineering | Surveying | Planning | GIS | Consulting

Savannah, GA | Brunswick, GA | Charleston, SC | Myrtle Beach, SC | Wilmington, NC

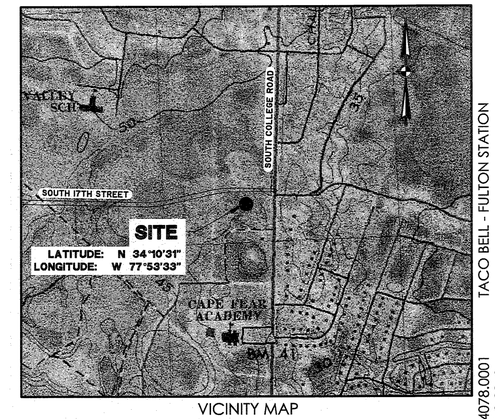

VICINITY MAP

SCALE: 1" = 1000'

TACO BELL - FULTON STATION

J-24078.0001
02-12-2013

Sheet List Table

Sheet Number	Sheet Title
C0 △1	Cover Sheet
C1.1	Existing Condition and Demolition Plan
C1.2	Site Development Plan
EC1.1 △2	Erosion Control Plan
EC1.2 △2	Erosion Control Details
C2.1 △1	Water and Sewer Plan
WSD-1	CFPUA Water Distribution System - Standard Details
WSD-2	CFPUA Water Distribution System - Standard Details
SSD-1	CFPUA Sanitary Sewer - Standard Details
SSD-2	CFPUA Sanitary Sewer - Standard Details
SSD-3	CFPUA Sanitary Sewer - Standard Details
SSD-4	CFPUA Sanitary Sewer - Standard Details
C3.1	Paving, Grading, and Drainage Plan
C3.2	Drainage Profiles
C4.1	Paving, Grading, and Drainage Details
C4.2	Paving, Grading, and Drainage Details
L1.1	Planting Plan
L1.2	Planting Details and Notes
E1.1	Lighting Plan

SURVEY NOTES:

BOUNDARY & TOPOGRAPHIC INFORMATION OBTAINED FROM SURVEY BY ARNOLD W. CARSON, PLS, 910-772-9113.

CONTOUR INTERVAL: ONE (1) FOOT

DATUM: VERTICAL: NONE HORIZONTAL: NONE

BENCHMARK: TOP OF EXISTING FIRE HYDRANT, ELEVATION: 49.38 (ASSUMED)

THE LOCATION OF UNDERGROUND UTILITIES SHOWN IS APPROXIMATE BASED ON SURFACE FIELD EVIDENCE AND INFORMATION SUPPLIED BY UTILITY AGENCIES. THE SURVEY MAKES NO CERTIFICATION AS TO THE COMPLETENESS OF THE LOCATIONS SHOWN HEREON. APPROPRIATE UTILITY COMPANIES SHOULD BE CONTACTED FOR VERIFICATION OF LOCATIONS PRIOR TO ANY CONSTRUCTION ACTIVITY.

THE PROPERTY IS NOT LOCATED IN A 100 YR. FLOOD HAZARD AREA AS DESIGNATED ON F.E.M.A. F.I.R.M. MAP PANEL 3720313500J, DATED APRIL 3, 2006.
NORTH CAROLINA PARCEL ID: R06600-001-035-000

UTILITIES & AGENCIES:

△1

PLANNING & ZONING:
CITY OF WILMINGTON, NC DEVELOPMENT SERVICES
305 CHESTNUT STREET
WILMINGTON, NC 28401
PH: (910) 341-3258, FAX: (910) 341-7801

BUILDING INSPECTIONS:
NEW HANOVER COUNTY PLANNING AND INSPECTIONS
230 GOVERNMENT CENTER DRIVE, SUITE 130
WILMINGTON, NC 28403
PH: (910) 798-7175, FAX: (910) 798-7003

SEWER:
CAPE FEAR PUBLIC UTILITIES AUTHORITY (CFPUA)
235 GOVERNMENT CENTER DRIVE
WILMINGTON, NC 28403
PH: (910) 332-6550, FAX: (910) 332-6352

WATER:
CAPE FEAR PUBLIC UTILITIES AUTHORITY (CFPUA)
235 GOVERNMENT CENTER DRIVE
WILMINGTON, NC 28403
PH: (910)332-6550, FAX: (910) 332-6352

STORMWATER & EROSION CONTROL:
NCDENR – WILMINGTON REGIONAL OFFICE
127 CARDINAL AVENUE
WILMINGTON, NC 28405
PH: (910) 795-7215

ELECTRIC:
PROGRESS ENERGY
5700 HOLLY SHELTER ROAD
CASTLE HAYNE, NC 28429
(910) 602-4304, KEVIN LEATHERWOOD

CABLE, INTERNET & TELEPHONE:
TIME WARNER
3809 SHIPYARD BOULEVARD
WILMINGTON, NC 28403
(910) 772-5771, BILL DYKES

TELEPHONE:
AT&T
102 NORTH 4TH STREET
WILMINGTON, NC 28401
(910) 341-1624, LINDA LASHLEY
(910) 392-8712, STEVE DAYVAULT

GENERAL NOTES:

1. NO CERTIFICATION OF OCCUPANCY WILL BE ISSUED UNTIL ALL SITE IMPROVEMENTS HAVE BEEN COMPLETED AND ACCEPTED BY OWNER, ENGINEER & NEW HANOVER COUNTY.
2. ALL CONSTRUCTION TO COMPLY WITH FEDERAL, STATE & TOWN OF NEW HANOVER COUNTY STANDARDS.
3. NOTIFY NEW HANOVER COUNTY INSPECTOR 48 HOURS BEFORE BEGINNING OF EVERY PHASE OF CONSTRUCTION.
4. CONTRACTOR SHALL VERIFY ACCURACY OF TEMPORARY BENCHMARKS PRIOR TO USING THEM FOR CONSTRUCTION.
5. THE CONTRACTOR SHALL BE RESPONSIBLE FOR UTILITY LOCATIONS. CONTACT NC ONE CALL (PH: 800-632-4949). THE EXISTING UNDERGROUND UTILITIES SHOWN HEREON ARE BASED UPON AVAILABLE INFORMATION. THE CONTRACTOR SHALL BE RESPONSIBLE FOR DETERMINING THE EXACT LOCATION AND ELEVATIONS OF ALL EXISTING UTILITIES PRIOR TO BEGINNING DIGGING OPERATIONS. IF UTILITIES OTHER THAN THOSE SHOWN ARE ENCOUNTERED DURING CONSTRUCTION, THE CONTRACTOR SHALL NOTIFY THE ENGINEER IMMEDIATELY AND TAKE STEPS TO PROTECT THE LINE(S) AND ENSURE CONTINUED SERVICE. DAMAGE CAUSED TO EXISTING UTILITIES BY THE CONTRACTOR SHALL BE REPAIRED BY THE CONTRACTOR.
6. THE CONTRACTOR SHALL CONFIRM THE CONNECTION POINTS OF NEW UTILITIES TO EXISTING UTILITIES PRIOR TO BEGINNING NEW CONSTRUCTION.
7. THE CONTRACTOR SHALL NOTIFY THE ENGINEER IF UNSUITABLE MATERIAL IS DISCOVERED PRIOR TO BEGINNING ANY REMOVAL OPERATION.
8. CONTRACTOR SHALL GRADE ALL AREAS SUCH THAT WATER DRAINS TO THE APPROPRIATE RIGHT-OF-WAY, EASEMENT, OR SWALE PRIOR TO FINAL APPROVAL.
9. ALL STORM DRAIN PIPE INVERTS IN AND OUT ARE THE SAME AS THE BOX INVERT UNLESS OTHERWISE NOTED ON THE PLAN AND/OR PROFILE SHEETS.
10. ALL AT GRADE UTILITIES SHALL BE LOCATED OUT OF THE CURB LINE.
11. APPROVAL OF PLANS DOES NOT AUTHORIZE GRADING OR ANY OTHER DISTURBANCE TO ADJACENT PROPERTIES. IF FIELD CONDITIONS WARRANT OFF-SITE GRADING OR DISTURBANCE, CONTRACTOR SHALL NOTIFY OWNER OR OWNER REPRESENTATIVE
12. ANY GRADING BEYOND WHAT IS DEPICTED IN THE APPROVED AND PERMITTED PLANS IS A VIOLATION OF THE STATE'S EROSION CONTROL AND GRADING REQUIREMENTS AND MAY BE SUBJECT TO A FINE. THE CONTRACTOR SHALL BE RESPONSIBLE FOR PAYMENT OF ALL FINES DUE TO VIOLATIONS.
13. ALL CONSTRUCTION METHODS AND MATERIALS SHALL CONFORM TO STATE AND LOCAL CODES.
14. CONTRACTOR TO SUBMIT ALL SITE CONSTRUCTION SHOP DRAWINGS TO OWNER OR OWNER REPRESENTATIVE FOR APPROVAL. ANY SUBSTITUTIONS OR REVISIONS TO MATERIALS OR CONSTRUCTION METHODS SHALL BE APPROVED BY THE OWNER OR OWNER REPRESENTATIVE PRIOR TO CONSTRUCTION.
15. CONTRACTOR SHALL REFER TO LAYOUT PLANS FOR THE LOCATION AND DIMENSIONS OF PROJECT.
16. CONTRACTOR TO PROVIDE ALL EROSION CONTROL MEASURES AS REQUIRED BY STATE AND LOCAL AUTHORITIES. REFERENCE EROSION CONTROL SHEETS FOR MORE NOTES AND DETAILS. ALL MEASURES SHALL BE MAINTAINED, REPAIRED AND/OR REPLACED AT THE CONTRACTORS EXPENSE UNTIL PROJECT IS COMPLETELY STABILIZED.
17. DAMAGE TO INFRASTRUCTURE, PUBLIC OR PRIVATE PROPERTY, AND/OR VEGETATION SHALL BE IMMEDIATELY REPAIRED OR REPLACED BY CONTRACTOR.
18. ANY DAMAGE TO EXISTING PAVEMENT ON ADJACENT STREETS MUST BE REPAIRED AT CONTRACTOR'S EXPENSE AND TO THE SATISFACTION OF THE ENGINEER.
19. WHERE FIELD INSPECTIONS ARE REQUIRED BY THE COUNTY, STATE AND/OR ENGINEER THE CONTRACTOR SHALL NOTIFY THE ENGINEER A MINIMUM OF 48 HOURS IN ADVANCE TO SCHEDULE SUCH INSPECTIONS.
20. A COMPLETE SET OF APPROVED DRAWINGS AND SPECIFICATIONS MUST BE MAINTAINED ON SITE AT ALL TIMES THAT THE CONTRACTOR IS PERFORMING WORK. THESE DRAWINGS SHALL BE MADE AVAILABLE TO THE OWNER, OWNER'S REPRESENTATIVE, NEW HANOVER COUNTY AND/OR NCDENR PERSONNEL AT THEIR REQUEST.
21. ANY REVISIONS DURING CONSTRUCTION WHICH ALTER THE SITE LAYOUT, CONSTRUCTION METHODS, OR DRAINAGE MUST BE SUBMITTED AND APPROVED IN WRITING BY THE ENGINEER.
22. THE CONTRACTOR IS RESPONSIBLE FOR OBTAINING ALL CONSTRUCTION PERMITS NECESSARY FROM OTHER RESPONSIBLE AGENCIES OTHER THAN NCDENR STORMWATER PERMIT AND NCDENR LAND DISTURBANCE PERMIT.
23. CONTRACTOR RESPONSIBLE FOR COORDINATION OF TEMPORARY AND PERMANENT POWER INSTALLATION AND LAYOUT FOR POWER / PARKING LOT LIGHTING WITH JONES-ONSLOW ELECTRIC.
24. REFERENCE PLAN AND DETAIL SHEETS FOR ADDITIONAL NOTES.
25. A PRE-CONSTRUCTION MEETING WITH THE CITY OF WILMINGTON MUST BE HELD PRIOR TO BEGINNING ANY WORK IN PUBLIC RIGHT-OF-WAY. △1

SITE DATA:

OWNER:
R & S MATTHEWS PROPERTIES, LLC
P.O. BOX 87886
FAYETTEVILLE, NC 28304

PHONE: (910) 323-9700
CONTACT: RONNIE B. MATTHEWS

ENGINEER:
THOMAS & HUTTON ENGINEERING CO.
215 S. KERR AVENUE, UNIT B
WILMINGTON, NC 28403
PHONE: 910-332-3400
CONTACT: JACK D. REEL, P.E., LEED AP

PROPERTY INFORMATION:

PARCEL:
TAX PARCEL ID: R06600-001-035-000
ALT ID: 313510.46.8577.0000

0.75 ACRE
PT. LOT 2, FULTON STATION
MAP BOOK 45, PAGE 341

ZONING: CB (COMMERCIAL BUSINESS)

CAMA LAND USE: URBAN

TOTAL AREA: ±0.75 ACRES (32,500 S.F.)

SETBACKS:
FRONT: 20'
REAR: 10'
SIDE: 0'

△1

PROPOSED BUILDING:
BUILDING AREA = 2,489 S.F.
INDOOR SEATING PROVIDED = 50
OUTDOOR SEATING PROVIDED = 0

MAXIMUM BUILDING HEIGHT = 45'

IMPERVIOUS SURFACE:
PRE-DEVELOPMENT = VACANT LOT
POST-DEVELOPMENT = 21,440 S.F.

DISTURBED AREA = 32,500 S.F.

OFFSITE STORMWATER PERMIT
#SW8 981023

PARKING REQUIRED:

RESTAURANT:
MIN. 1 PER 4 SEATS or 1 PER 80 S.F.
50 SEATS/4 = 13
MAX. 1 PER 2.5 SEATS or 1 PER 65 S.F.
50 SEATS/2.5 = 20

TOTAL REQUIRED:
MIN. = 13
MAX. = 20

FIRST 25% INCREASE = 13*1.25 = 17
SECOND 25% INCREASE = 17*1.25 = 22

PARKING PROVIDED:
REGULAR (9'x18'): 13 SPACES
HANDICAP (8'x18'): 2 SPACES
TOTAL: 15 SPACES

SUBMITTAL HISTORY

SUBMITTED TO	DATE
CITY OF WILMINGTON, NEW HANOVER COUNTY, NCDENR, CFPUA	2-12-13

North Carolina
One Call Center
Call Before You Dig
"It's The Law"
1-800-632-4949

THOMAS & HUTTON
Engineering | Surveying | Planning | GIS | Consulting
215 South Kerr Avenue • Unit B
Wilmington, NC 28403 • 910.332.3360
www.thomasandhutton.com
Savannah, GA | Brunswick, GA | Charleston, SC | Myrtle Beach, SC

NORTH CAROLINA PROFESSIONAL SEAL 25959 ENGINEER JOHN H. RICHARDS
20 MAR 13

NORTH CAROLINA THOMAS & HUTTON ENGINEERING CO. No. F-0871 CERTIFICATE OF AUTHORIZATION

△
△
△
△
△
△
△
△2 3-20-13 REVISED PER COUNTY
△1 3-20-13 REVISED PER CITY

CONTRACT DATE: XX.XX.XX
BUILDING TYPE: LARGE 50 Ni
PLAN VERSION: AUGUST 2012
SITE NUMBER: 12-0276
STORE NUMBER: XXXXX

TACO BELL

4422 SOUTH 17TH STREET
FULTON STATION, NC

LARGE 50 Ni

SHEET TITLE:

COVER SHEET

JOB NO: J-24078.0001
DATE: 02-12-2013
DRAWN BY: KWL
DESIGNED: KWL
REVIEWED: JHR
APPROVED: JHR
SCALE: AS SHOWN

SHEET NO:

C0

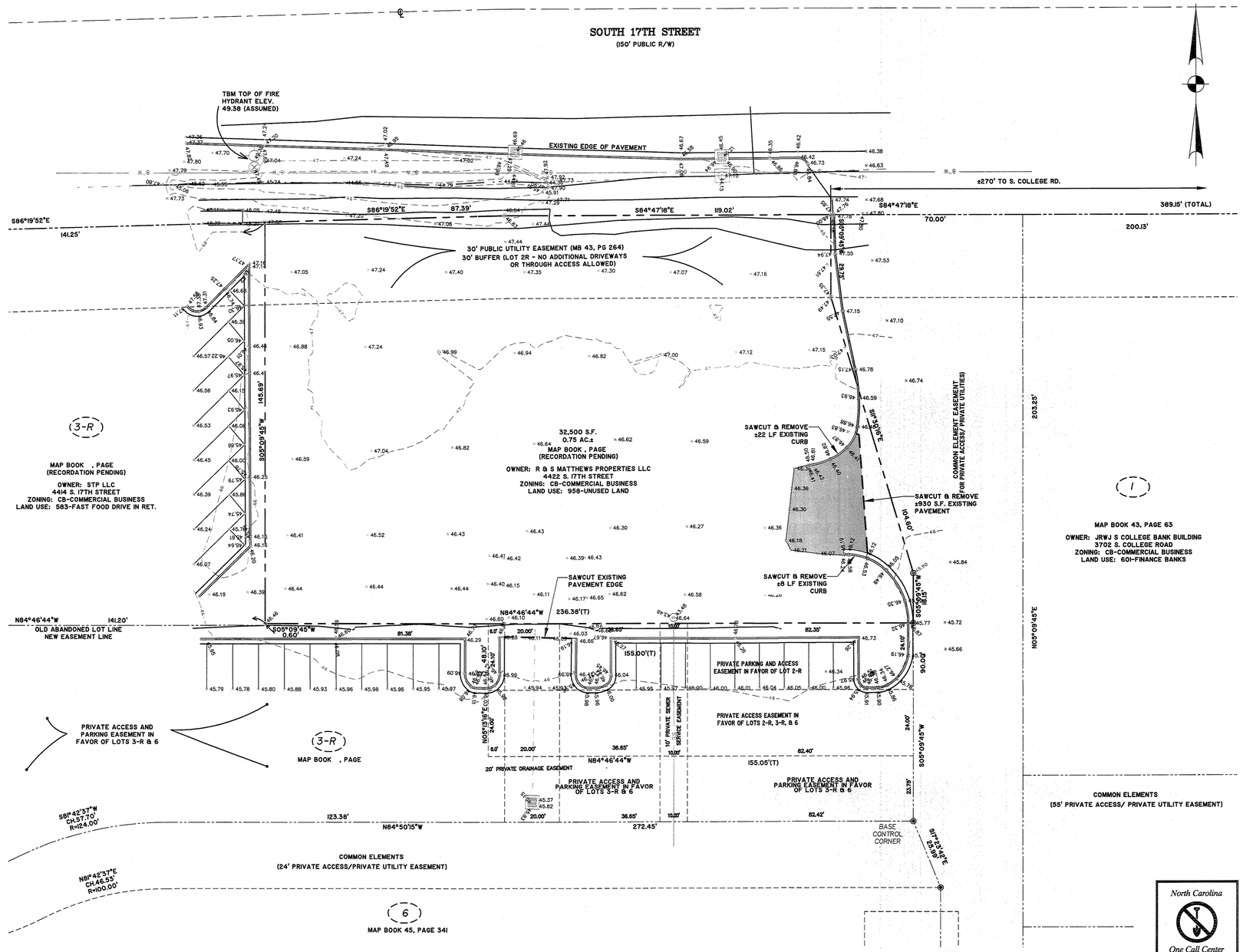

North Carolina
One Call Center
Call Before You Dig
"It's The Law"
1-800-632-4949

GRAPHIC SCALE

20 0 10 20 40 80

(IN FEET)
1 inch = 20 ft.

THOMAS & HUTTON
Engineering | Surveying | Planning | GIS | Consulting
215 South Kerr Avenue • Unit B
Wilmington, NC 28403 • 910.332.3360
www.thomasandhutton.com
Savannah, GA | Brunswick, GA | Charleston, SC | Myrtle Beach, SC

NORTH CAROLINA PROFESSIONAL SEAL 25939 ENGINEER JOHN H. RICHARDS
20 MAR 13

NORTH CAROLINA THOMAS & HUTTON ENGINEERING CO. No. F-0871 CERTIFICATE OF AUTHORIZATION

CONTRACT DATE:	XX.XX.XX
BUILDING TYPE:	LARGE 50 Ni
PLAN VERSION:	AUGUST 2012
SITE NUMBER:	12-0276
STORE NUMBER:	XXXXX

TACO BELL

4422 SOUTH 17TH STREET
FULTON STATION, NC

TACO BELL

LARGE 50 Ni

SHEET TITLE:
EXISTING CONDITION AND DEMOLITION PLAN

JOB NO:	J-24078.0001
DATE:	02-12-2013
DRAWN BY:	KWL
DESIGNED:	KWL
REVIEWED:	JHR
APPROVED:	JHR
SCALE:	1" = 20'

SHEET NO:
C1.1

NOTES:

1. ACCESSIBLE ROUTE - EXTERIOR:
MINIMUM CLEAR WIDTH IS 5'. IF ACCESSIBLE ROUTE HAS LESS THAN 5' CLEAR WIDTH, THEN PASSING SPACES AT LEAST 5'X5' SHALL BE LOCATED EVERY 200' OR LESS (INTERSECTING SIDEWALKS MEET THIS REQUIREMENT). LONGITUDINAL (RUNNING) SLOPE MAY NOT EXCEED 5% UNLESS RAMP IS INSTALLED (RAMPS MAY NOT EXCEED 8.33%). CROSS SLOPE MAY NOT EXCEED 2%. GAPS IN FOUTE MAY NOT EXCEED 1/2" IN WIDTH.

2. FINISHED SURFACE HEIGHT DIFFERENCE REQUIREMENTS:
A. 0 TO 1/4": NO REQUIREMENTS
B. 1/4" TO 1/2": BEVEL WITH ≤2 SLOPE
C. LARGER THAN 1/2": CONFORM TO REQUIREMENTS FOR RAMP

3. RAMPS:
- MAX RAMP SLOPE 8.33% (1:12).
- RAMPS STEEPER THAN 8.33% ARE NOT ACCEPTABLE.
- MAX RISE FOR ANY RAMP RUN IS 30" (AT 8.33% SLOPE, MAXIMUM RUN OF RAMP IS 30').
- MAX CROSS SLOPE OF RAMP 2% (1:50)

3A. LANDINGS:
- RAMPS SHALL HAVE LEVEL LANDINGS AT BOTTOM AND TOP OF EACH RAMP.
- LANDING SHALL BE AT LEAST AS WIDE AS RAMP LEADING TO IT.
- LANDING LENGTH SHALL BE MINIMUM 5' CLEAR.
- IF RAMPS CHANGE DIRECTION AT LANDING, MINIMUM LANDING SIZE SHALL BE 5'X5'
- ALL LANDINGS ARE TO BE NO MORE THAN 2% SLOPE IN ANY DIRECTION.

4. CURB RAMPS:
- MAX SLOPE OF CURB RAMP 8.33%.
- MAX SLOPE OF SIDE FLARES 10%.
- MAX SLOPE OF ADJOINING GUTTERS, ROAD SURFACE, OR ACCESSIBLE ROUTE 5%.
- MIN WIDTH 36" (NOT INCLUDING SIDE FLARES).
- DETECTABLE WARNING IS REQUIRED ON CURB RAMPS AT TRAFFIC AISLES, AND SHALL BE 24" MINIMUM IN THE DIRECTION OF TRAVEL AND EXTEND THE FULL WIDTH OF THE CURB RAMP OR FLUSH SURFACE. DETECTABLE WARNINGS SHALL BE LOCATED SO THE EDGE NEAREST THE CURB LINE IS 6" TO 8" FROM THE CURB LINE.

5. PAVEMENT MARKINGS:
AS REQUIRED BY LOCAL JURISDICTIONAL AUTHORITY (RECOMMENDED CROSSWALK MARKING TO DESIGNATE ACCESSIBLE PEDESTRIAN ROUTE)

6. HANDICAP PARKING SPACES:
- MINIMUM 8' WIDE ACCESSIBLE PARKING SPACE
- MINIMUM 5' WIDE ACCESS AISLE AT STANDARD SPACES
- MINIMUM 8' WIDE ACCESS AISLE AT VAN ACCESSIBLE SPACES
- MAXIMUM 2% (1:50) SLOPE IN ANY DIRECTION

7. SIGNAGE:
ACCESSIBLE PARKING SPACES SHALL BE DESIGNATED AS RESERVED BY A SIGN SHOWING THE SYMBOL OF ACCESSIBILITY. VAN ACCESSIBLE SPACES SHALL HAVE AN ADDITIONAL SIGN "VAN-ACCESSIBLE" MOUNTED BELOW THE SYMBOL. SUCH SIGNS SHALL BE LOCATED SO THEY CANNOT BE OBSCURED BY A VEHICLE PARKED IN THE SPACE (60" ABOVE GRADE UNLESS OTHER HEIGHT REQUIRED BY LOCAL JURISDICTION).

8. ACCESSIBLE ROUTES:
MUST COMPLY WITH ADA, THE FAIR HOUSING ACT AND ICC/ANSI A117.1-2003.

LEGEND

- LIGHT-DUTY ASPHALT PAVEMENT
- HEAVY-DUTY ASPHALT PAVEMENT
- CONCRETE PAVEMENT
- BLACK CONCRETE SIDEWALK
- ACCESSIBLE ROUTE

LINE TABLE		
LINE	BEARING	LENGTH
L1	S 0°02'57" E	20.24'
L2	N 89°57'03" E	98.78'
L3	S 0°02'57" E	14.41'
L4	S 89°57'03" W	70.71'
L5	S 89°57'03" W	19.49'
L6	N 89°57'03" E	30.25'

CURVE TABLE					
CURVE	RADIUS	LENGTH	CHORD	CHD BEARING	DELTA
C1	27.00'	42.41'	38.18'	S 45°02'57" E	90°00'00"
C2	27.18'	42.69'	38.43'	S 44°57'03" W	90°00'00"
C3	42.00'	41.93'	40.21'	N 61°26'52" W	57°12'10"
C4	32.00'	68.58'	56.19'	N 28°33'08" E	122°47'50"

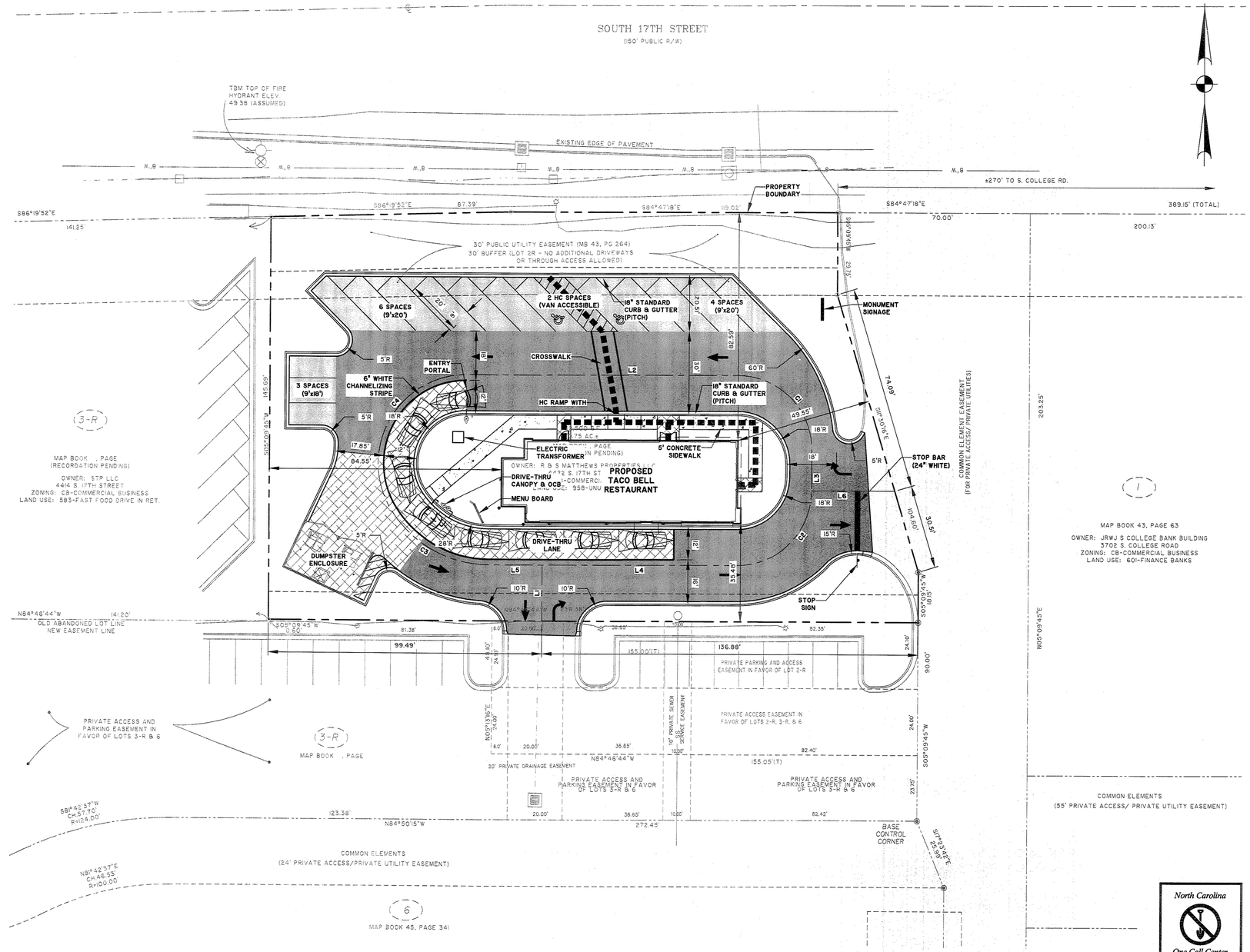

North Carolina
One Call Center
Call Before You Dig
"It's The Law"
1-800-632-4949

GRAPHIC SCALE
20 0 10 20 40 80
(IN FEET)
1 inch = 20 ft.

THOMAS & HUTTON
Engineering | Surveying | Planning | GIS | Consulting
215 South Kerr Avenue • Unit B
Wilmington, NC 28403 • 910.332.3360
www.thomasandhutton.com
Savannah, GA | Brunswick, GA | Charleston, SC | Myrtle Beach, SC

NORTH CAROLINA PROFESSIONAL SEAL 25998 ENGINEER JOHN H. RICHARDS
20 Mar 13

NORTH CAROLINA THOMAS & HUTTON ENGINEERING CO. No. F-0871 CERTIFICATE OF AUTHORIZATION

CONTRACT DATE:	XX.XX.XX
BUILDING TYPE:	LARGE 50 Ni
PLAN VERSION:	AUGUST 2012
SITE NUMBER:	12-0276
STORE NUMBER:	XXXXX

TACO BELL
4422 SOUTH 17TH STREET
FULTON STATION, NC

LARGE 50 Ni

SHEET TITLE:
SITE DEVELOPMENT PLAN

JOB NO:	J-24078.0001
DATE:	02-12-2013
DRAWN BY:	KWL
DESIGNED:	KWL
REVIEWED:	JHR
APPROVED:	JHR
SCALE:	1" = 20'

SHEET NO:
C1.2

I. GENERAL NOTES

1. ALL SEDIMENT AND EROSION CONTROL DEVICES SHALL BE INSPECTED EVERY SEVEN (7) DAYS OR AFTER EACH RAINFALL OCCURRENCE THAT EXCEEDS ONE-HALF (0.5) INCH. DAMAGED OR INEFFECTIVE DEVICES SHALL BE REPAIRED OR REPLACED, AS NECESSARY.
2. PROVIDE SILT FENCE AND/OR OTHER CONTROL DEVICES, AS MAY BE REQUIRED, TO CONTROL SOIL EROSION DURING UTILITY CONSTRUCTION. ALL DISTURBED AREAS SHALL BE CLEANED, GRADED AND STABILIZED WITH GRASSING IMMEDIATELY AFTER THE UTILITY INSTALLATION.
3. ALL EROSION CONTROL DEVICES SHALL BE PROPERLY MAINTAINED DURING ALL PHASES OF CONSTRUCTION UNTIL THE COMPLETION OF ALL CONSTRUCTION ACTIVITIES AND ALL DISTURBED AREAS HAVE BEEN STABILIZED. ADDITIONAL CONTROL DEVICES MAY BE REQUIRED DURING CONSTRUCTION IN ORDER TO CONTROL EROSION AND/OR OFFSITE SEDIMENTION. ALL TEMPORARY CONTROL DEVICES SHALL BE REMOVED ONCE CONSTRUCTION IS COMPLETE AND THE SITE IS STABILIZED.
4. THE CONTRACTOR MUST TAKE NECESSARY ACTION TO MINIMIZE THE TRACKING OF MUD ONTO THE PAVED ROADWAY FROM CONSTRUCTION AREAS. THE CONTRACTOR SHALL DAILY REMOVE MUD/SOIL FROM PAVEMENT AS MAY BE REQUIRED.
5. THE FOLLOWING NOTES ARE SPECIFIED BY THE NORTH CAROLINA DEPARTMENT OF ENVIRONMENT AND NATURAL RESOURCES (DENR) AND ARE TO BE EXECUTED BY THE CONTRACTOR. (2)

   A.) ALL SEDIMENT CONTROL MEASURES SHALL BE INSPECTED AT LEAST ONCE EVERY SEVEN CALENDAR DAYS AND AFTER ANY STORM EVENT OF GREATER THAN 0.5 INCHES OF PRECIPITATION DURING ANY 24-YEAR PERIOD. ALL SEDIMENT CONTROL FEATURES SHALL BE MAINTAINED UNTIL FINAL STABILIZATION HAS BEEN OBTAINED.

   B.) STABILIZATION MEASURES SHALL BE INITIATED AS SOON AS PRACTICABLE IN PORTIONS OF THE SITE WHERE CONSTRUCTION ACTIVITIES HAVE TEMPORARILY OR PERMANENTLY CEASED, BUT IN NO CASE MORE THAN THE TIMES LISTED BELOW:

   - DENUDED AREAS: WITHIN 15 WORKING DAYS OF CEASE OF ANY PHASE OF ACTIVITY
   - SLOPES: WITHIN 21 CALENDAR DAYS OF CEASE OF ANY PHASE OF ACTIVITY (INCLUDING SLOPES, SWALES, STOCKPILES, ETC.)
6. ADDITIONAL MEASURES TO CONTROL EROSION AND SEDIMENT MAY BE REQUIRED BY THE COUNTY, PROJECT ENGINEER AND/OR NCDENR.
7. ANY GRADING BEYOND WHAT IS DEPICTED IN THE APPROVED AND PERMITTED PLANS IS A VIOLATION OF THE STATE'S EROSION CONTROL AND GRADING REQUIREMENTS MAY BE SUBJECT TO A FINE. THE CONTRACTOR SHALL BE RESPONSIBLE FOR PAYMENT OF ALL FINES DUE TO VIOLATIONS.
8. GRADING MORE THAN ONE ACRE WITHOUT AN APPROVED EROSION CONTROL PLAN IS A VIOLATION OF SEDIMENT POLLUTION CONTROL ACT AND MAY BE SUBJECT TO A FINE.
9. ALL OFF SITE BORROW MUST COME FROM A STATE APPROVED SOURCE. CONTRACTOR TO SUBMIT WRITTEN DOCUMENTATION IDENTIFYING SOURCE.
10. ALL SURPLUS MATERIAL AND DEMOLITION DEBRIS SHALL BE HAULED OFF SITE TO AN APPROVED WASTE SITE. CONTRACTOR TO SUBMIT WRITTEN DOCUMENTATION IDENTIFYING APPROVED WASTE SITE.

II. CONSTRUCTION SEQUENCE

1. INSTALL SILT FENCE AND EROSION CONTROL MEASURES
2. CLEARING AND GRUBBING
3. INSTALL SEDIMENT BASIN
4. INSTALL DRAINAGE CONVEYANCES
5. INSTALL WATER AND SEWER SERVICES
6. SITE ROUGH GRADING
7. BUILDING CONSTRUCTION
8. PARKING LOTS AND FINAL GRADING
9. FINAL GRASSING AND STABILIZATION
10. CONVERT SEDIMENT BASIN TO WET DETENTION BASIN PER DESIGN SPECIFICATIONS AND DETAILS ONCE THE SITE IS PERMANENTLY STABILIZED.

III. MAINTENANCE PLAN

1. ALL EROSION AND SEDIMENT CONTROL PRACTICES WILL BE CHECKED FOR STABILITY AND OPERATION FOLLOWING EVERY RUNOFF-PRODUCING RAINFALL, BUT IN NO CASE, LESS THAN ONCE EVERY WEEK. ANY NEEDED REPAIRS WILL BE MADE IMMEDIATELY TO MAINTAIN ALL PRACTICES AS DESIGNED.
2. ALL CONSTRUCTION ENTRANCES WILL BE PERIODICALLY TOP-DRESSED WITH AN ADDITIONAL TWO (2) INCHES OF #4 STONE TO MAINTAIN PROPER DEPTH. ANY SEDIMENT THAT IS TRACKED INTO THE STREET WILL BE IMMEDIATELY REMOVED.
3. SEDIMENT WILL BE REMOVED FROM THE SEDIMENT BASIN WHEN STORAGE CAPACITY HAS BEEN APPROXIMATELY 50% FILLED. SKIMMER WILL BE CLEANED AND MAINTAINED TO ENSURE PROPER OPERATION PER MANUFACTURER'S RECOMMENDATIONS.
4. SEDIMENT WILL BE REMOVED FROM BEHIND THE SEDIMENT FENCE WHEN IT BECOMES 0.5 FEET DEEP AT THE FENCE. THE SEDIMENT FENCE WILL BE REPAIRED AS NECESSARY TO MAINTAIN A BARRIER. SILT FENCE STAKES WILL BE SPACED 6 FEET APART UNLESS A WIRE BACKING IS USED WITH 8 FOOT STAKE SPACING.
5. ALL SEEDED AREAS WILL BE FERTILIZED, RESEEDED AS NECESSARY, AND MULCHED ACCORDING TO SPECIFICATIONS IN THE VEGETATIVE PLAN TO MAINTAIN A VIGOROUS, DENSE COVER.
6. SEDIMENT, STRAW, LIMBS OR OTHER DEBRIS WILL BE REMOVED FROM THE CHECK DAMS TO PREVENT CLOGGING. STONES WILL BE ADDED AS NECESSARY TO MAINTAIN DESIGN HEIGHT AND CROSS SECTION.

NPDES STABILIZATION REQUIREMENTS

ALL DISTURBED AREAS WILL BE STABILIZED WITHIN THE TIMEFRAME SPECIFIED BELOW:

- PERIMETER DIKES, SWALES, DITCHES & SLOPES - 7 DAYS OF LAST LAND DISTURBING ACTIVITY
- SLOPES STEEPER THAN 3:1 - WITHIN 7 DAYS OF LAST LAND DISTURBING ACTIVITY
- ALL OTHER AREAS - WITHIN 14 DAYS OF LAST LAND DISTURBING ACTIVITY

IV. INSPECTIONS

1. QUALIFIED PERSONNEL (PROVIDED BY THE DISCHARGER) WILL INSPECT DISTURBED AREAS OF THE CONSTRUCTION SITE, AREAS USED FOR STORAGE OF MATERIALS THAT ARE EXPOSED TO PRECIPITATION THAT HAVE NOT BEEN FINALLY STABILIZED, STRUCTURAL CONTROL MEASURES, AND LOCATIONS WHERE VEHICLES ENTER OR EXIT THE SITE AT LEAST ONCE EVERY SEVEN CALENDAR DAYS AND WITHIN 24 HOURS OF THE END OF A STORM THAT IS 0.5 INCHES OR GREATER. WHERE SITES HAVE BEEN FINALLY STABILIZED SUCH INSPECTIONS SHALL BE CONDUCTED AT LEAST ONCE EVERY MONTH.
2. DISTURBED AREAS AND AREAS USED FOR STORAGE OF MATERIALS THAT ARE EXPOSED TO PRECIPITATION SHALL BE INSPECTED FOR EVIDENCE OF, OR THE POTENTIAL FOR, POLLUTANTS ENTERING THE DRAINAGE SYSTEM. EROSION AND SEDIMENT CONTROL MEASURES IDENTIFIED IN THE PLAN SHALL BE OBSERVED TO ENSURE THAT THEY ARE OPERATING CORRECTLY. WHERE DISCHARGE LOCATIONS OR POINTS ARE ACCESSIBLE, THEY SHALL BE INSPECTED TO ASCERTAIN WHETHER EROSION CONTROL MEASURES ARE EFFECTIVE IN PREVENTING SIGNIFICANT IMPACTS TO RECEIVING WATERS. LOCATIONS WHERE VEHICLES ENTER OR EXIT THE SITE SHALL BE INSPECTED FOR EVIDENCE OF OFFSITE SEDIMENT TRACKING.
3. BASED ON THE RESULTS OF THE INSPECTION, THE SITE DESCRIPTION IDENTIFIED IN THE PLAN IN ACCORDANCE WITH PARAGRAPH IV.D.L OF THE NORTH CAROLINA DEPARTMENT OF ENVIRONMENT, AND NATURAL RESOURCES NPDES GENERAL PERMIT FOR STORM WATER DISCHARGES FROM CONSTRUCTION ACTIVITIES THAT ARE CLASSIFIED AS "ASSOCIATED WITH INDUSTRIAL ACTIVITY" BY EPA REGULATION, HEREINAFTER REFERRED TO AS THE NPDES PERMIT, POLLUTION PREVENTION MEASURES IDENTIFIED IN THE PLAN IN ACCORDANCE WITH PARAGRAPH IV.D.2 OF THE NPDES PERMIT SHALL BE REVISED AS APPROPRIATE, BUT IN NO CASE LATER THAN 7 CALENDAR DAYS FOLLOWING THE INSPECTION. SUCH MODIFICATIONS SHALL PROVIDE FOR TIMELY IMPLEMENTATION OF ANY CHARGES TO THE PLAN WITHIN 7 CALENDAR DAYS FOLLOWING THE INSPECTION.
4. A REPORT SUMMARIZING THE SCOPE OF THE INSPECTION, NAME(S) AND QUALIFICATIONS OF PERSONNEL MAKING THE INSPECTION, THE DATE(S) OF THE INSPECTION, MAJOR OBSERVATIONS RELATING TO THE IMPLEMENTATION OF THE STORM WATER POLLUTION PREVENTION PLAN, AND ACTIONS TAKEN IN ACCORDANCE WITH PARAGRAPH IV.D.4.B OF THE NPDES PERMIT SHALL BE MADE AND RETAINED AS PART OF THE STORM WATER POLLUTION PREVENTION PLAN FOR AT LEAST THREE YEARS FROM THE DATE THE SITE IS FINALLY STABILIZED. SUCH REPORTS SHALL IDENTIFY ANY INCIDENTS OF NONCOMPLIANCE. WHERE A REPORT DOES NOT IDENTIFY ANY INCIDENTS OF NON-COMPLIANCE. WHERE A REPORT DOES NOT IDENTIFY ANY INCIDENTS OF NONCOMPLIANCE, THE REPORT SHALL CONTAIN A CERTIFICATION THAT THE FACILITY IS IN COMPLIANCE WITH THE STORM WATER POLLUTION PREVENTION PLAN AND THE NPDES PERMIT REFERENCED ABOVE. THE REPORT SHALL BE SIGNED IN ACCORDANCE WITH PART VI.G. OF THE NPDES PERMIT.

V. LONG TERM MAINTENANCE OF DRAINAGE AND STORMWATER MANAGEMENT SYSTEM

THE DRAINAGE SYSTEM WILL BE OWNED AND MAINTAINED BY TACO BELL AFTER CONSTRUCTION IS COMPLETE.

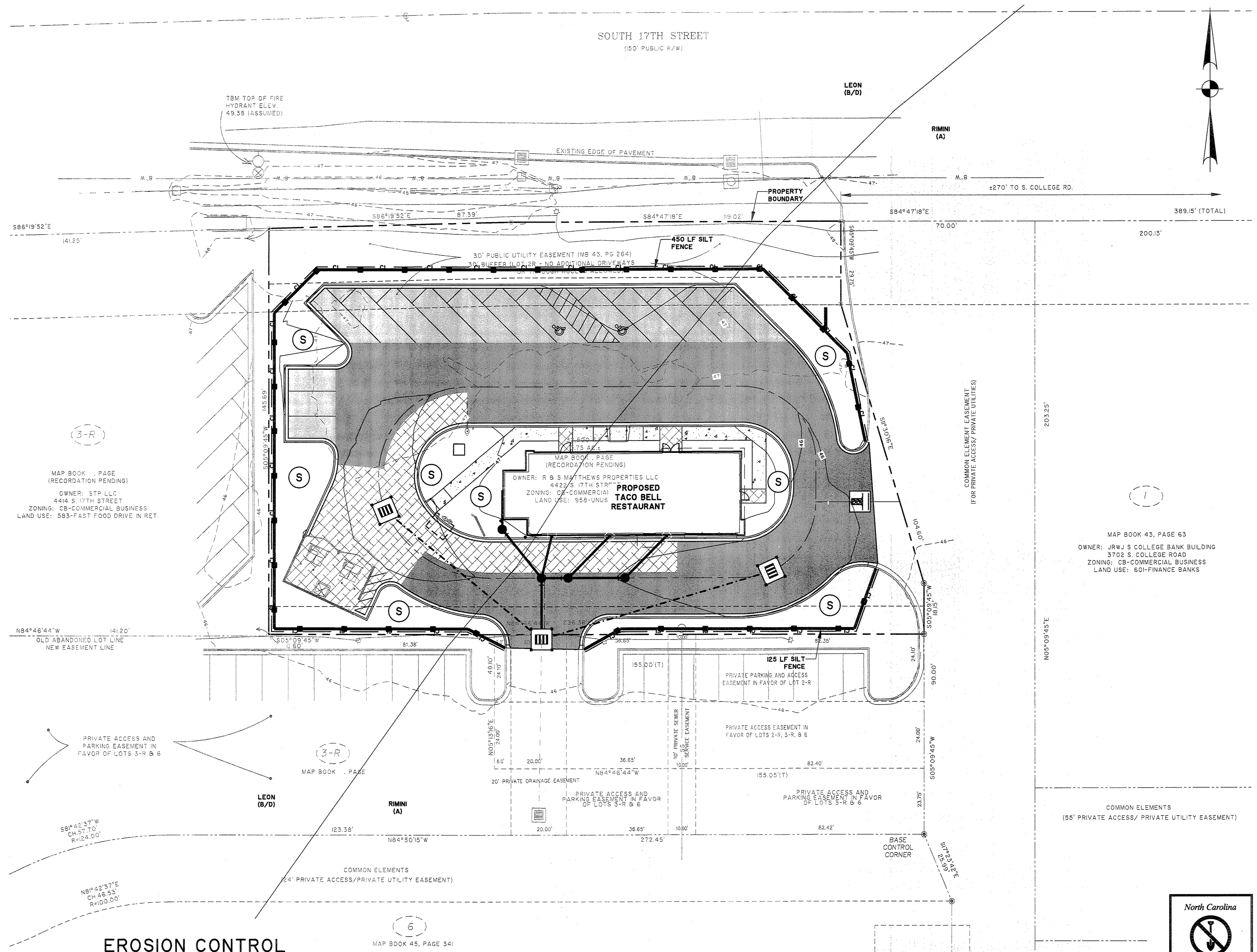

EROSION CONTROL LEGEND

DESCRIPTION	PLAN SYMBOL
SEDIMENT FENCE	
CLEARING LIMITS/LIMITS OF DISTURBANCE	CL
TEMPORARY GRAVEL CONSTRUCTION ENTRANCE/EXIT	
SODDING	S
HARDWARE CLOTH & GRAVEL INLET PROTECTION	

NOTES:
1. ALL SLOPES EXCEEDING 6:1 OR GREATER SHALL BE STABILIZED WITH EXCELSIOR MATTING OR APPROVED EQUIVALENT. CONTRACTOR RESPONSIBLE FOR MAINTENANCE, REPAIR AND/OR REPLACEMENT OF ALL EROSION CONTROL MEASURES AS REQUIRED THROUGHOUT CONSTRUCTION.
2. ALL TREES WITHIN DISTURBANCE LIMITS ARE TO BE REMOVED UNLESS OTHERWISE NOTED.
3. BASED ON A SITE EVALUATION PERFORMED BY CARSON SURVEYING, THERE ARE NO JURISDICTIONAL 404 WETLANDS LOCATED ON THE PROPERTY.

GRAPHIC SCALE

20 0 10 20 40 80

(IN FEET)
1 inch = 20 ft.

North Carolina
One Call Center
Call Before You Dig
"It's The Law"
1-800-632-4949

THOMAS & HUTTON
Engineering | Surveying | Planning | GIS | Consulting
215 South Kerr Avenue • Unit B
Wilmington, NC 28403 • 910.332.3360
www.thomasandhutton.com
Savannah, GA | Brunswick, GA | Charleston, SC | Myrtle Beach, SC

NORTH CAROLINA PROFESSIONAL ENGINEER SEAL 25958 JOHN H. RICHARDS 20 MAR 13

NORTH CAROLINA THOMAS & HUTTON ENGINEERING CO. No. F-0871 CERTIFICATE OF AUTHORIZATION

2	3-20-13 REVISED PER COUNTY

CONTRACT DATE:	XX.XX.XX
BUILDING TYPE:	LARGE 50 Ni
PLAN VERSION:	AUGUST 2012
SITE NUMBER:	12-0276
STORE NUMBER:	XXXXX

TACO BELL

4422 SOUTH 17TH STREET
FULTON STATION, NC

LARGE 50 Ni

SHEET TITLE:

EROSION CONTROL PLAN

JOB NO: J-24078.0001
DATE: 02-12-2013
DRAWN BY: KWL
DESIGNED: KWL
REVIEWED: JHR
APPROVED: JHR
SCALE: 1" = 20'

SHEET NO:

EC1.1

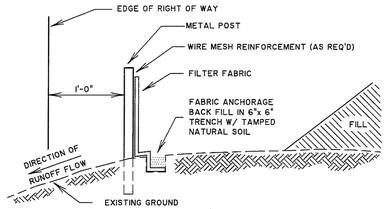

CROSS SECTION

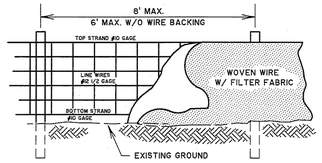

ELEVATION

NOTES:

FILTER CLOTH FOR SILT FENCE SHALL BE A TREVIRA TYPE II PRODUCT, CATALOG NO. 1120 AS MANUFACTURED BY THE HOECHST CELANESE CORP.

WOVEN WIRE FENCE SHALL BE REQUIRED AS A BACKING FOR FILTER FABRIC WITH AN ELONGATION AS DETERMINED BY ASTM D 1682, OF 50% OR GREATER. THE WIRE FENCE SHALL BE A MINIMUM OF 32 INCHES IN WIDTH AND SHALL HAVE A MINIMUM OF 6 LINE WIRES WITH 12 INCH STAY SPACING. (WIRE BACKING MAY BE OMITTED IF STAKES ARE MAXIMUM OF 6' APART.)

ONLY STEEL POST MAY BE USED. STEEL POST SHALL BE A MINIMUM OF 5 FEET LONG, WEIGH A MINIMUM OF 1.3 POUNDS/FOOT, AND HAVE PROJECTIONS FOR FASTENING THE WIRE OR THE FABRIC TO THE POST. STEEL POST SHALL ALSO HAVE A METAL PLATE SECURELY ATTACHED SUCH THAT WHEN THE POST IS DRIVEN TO THE PROPER DEPTH, THE PLATE WILL BE BELOW GROUND LEVEL FOR ADDITIONAL STABILITY. POSTS SHALL BE INSTALLED TO A DEPTH DIRECTED BY THE ENGINEER, WITH 1 TO 2 INCHES OF THE POST PROTRUDING ABOVE THE TOP OF THE WIRE FENCE OR FABRIC BEING IDEAL, BUT IN ANY CASE, NO MORE THAN 3 FEET OF THE POST SHALL PROTRUDE ABOVE THE GROUND.

TEMPORARY SILT FENCE DETAIL

NOT TO SCALE

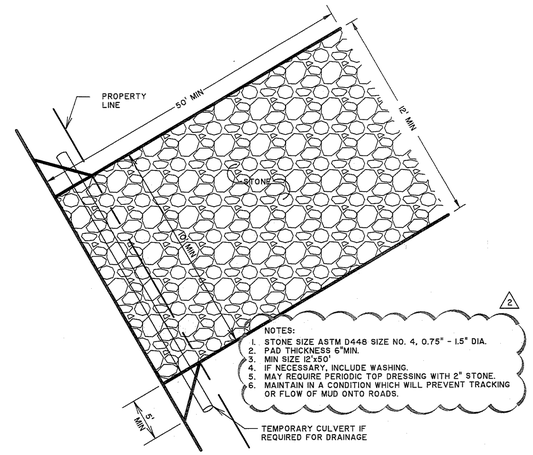

TEMPORARY CONSTRUCTION EXIT TCE

NOT TO SCALE

FERTILIZER REQUIREMENTS

TYPE OF SPECIES	YEAR	ANALYSIS OR EQUIVALENT N-P-K	RATE	N TOP DRESSING RATE
1. COOL SEASON GRASSES	FIRST SECOND MAINTENANCE	6-12-12 6-12-12 10-10-10	1500lbs./ac. 1000lbs./ac. 400 lbs./ac.	50-100 lbs./ac. * 1 & 2 - 30
2. COOL SEASON GRASSES AND LEGUMES	FIRST SECOND MAINTENANCE	6-12-12 0-10-10 0-10-10	1500lbs./ac. 1000lbs./ac. 400 lbs./ac.	50-100 lbs./ac. * 1 - -
3. GROUND COVERS	FIRST SECOND MAINTENANCE	10-10-10 10-10-10 10-10-10	1300lbs./ac. * 3 1300lbs./ac. * 3 1100 lbs./ac.	- - -
4. PINE SEEDLINGS	FIRST	20-10-5	ONE 21-GRAM PELLET PER SEEDLING PLACED IN THE CLOSING HOLE	-
5. SHRUB LESPEDEZA	FIRST MAINTENANCE	0-10-10 0-10-10	700lbs./ac. 700lbs./ac. * 4	- -
6. TEMPORARY COVER CROPS SEEDED ALONE	FIRST	10-10-10	500lbs./ac.	30 lbs./ac. * 5
7. WARM SEASON GRASSES	FIRST SECOND MAINTENANCE	6-12-12 6-12-12 10-10-10	1500lbs./ac. 800lbs./ac. 400 lbs./ac.	50-100 lbs./ac. * 2 & 6 50-100 lbs./ac. 30 lbs./ac. * 2
8. WARM SEASON GRASSES AND LEGUMES	FIRST SECOND MAINTENANCE	6-12-12 0-10-10 0-10-10	1500lbs./ac. 1000lbs./ac. 400 lbs./ac.	50-100 lbs./ac. * 6

** 1 APPLY IN SPRING FOLLOWING SEEDING.*
** 2 APPLY IN SPLIT APPLICATIONS WHEN HIGH RATES ARE USED.*
** 3 APPLY IN 3 SPLIT APPLICATIONS.*
** 4 APPLY WHEN PLANTS ARE PRUNED.*
** 5 APPLY TO GRASS SPECIES ONLY.*
** 6 APPLY WHEN PLANTS GROW TO A HEIGHT OF 2 TO 4 INCHES.*

NOTE: SPREAD AGRICULTURAL LIMESTONE EVENLY OVER ALL SEEDED AREAS AT A RATE OF OF 1.5 TONS/ACRE.

SEEDING RATES FOR TEMPORARY & PERMANENT COVER

MONTH	TEMPORARY COVER	RATE PER ACRE SEEDED ALONE	RATE PER ACRE ADDED TO MIX	PERMANENT COVER	RATE PER ACRE SEEDED ALONE	RATE PER ACRE ADDED TO MIX
JANUARY	* LESPEDEZA, ANNUAL * RYE * RYE GRASS, ANNUAL * WHEAT	40 lbs. 3 bu. 40 lbs. 3 bu.	10 lbs. .5 bu. – .5 bu.	* BAHIA, PENSACOLA BERMUDA, UNHULLED CENTIPEDE, SOD LESPEDEZA, SERICEA 1	60 lbs. 10 lbs. – 75 lbs.	30 lbs. 6 lbs. – –
FEBRUARY	LESPEDEZA, ANNUAL * RYE * RYE GRASS, ANNUAL	40 lbs. 3 bu. 40 lbs.	10 lbs. .5 bu. –	* BAHIA, PENSACOLA CENTIPEDE, SOD LESPEDEZA, SEDICEA 1 * LESPEDEZA, SEDICEA 2	60 lbs. – 75 lbs. 75 lbs.	30 lbs. – – –
MARCH	* LESPEDEZA, ANNUAL * RYE GRASS, ANNUAL * SUDAN GRASS	40 lbs. 40 lbs. 60 lbs.	10 lbs. – –	BAHIA, PENSACOLA BERMUDA, UNHULLED CENTIPEDE, SOD * LESPEDEZA, SEDICEA 1 LESPEDEZA, SEDICEA 2	60 lbs. 10 lbs. – 75 lbs. 75 lbs.	30 lbs. 6 lbs. – – –
APRIL	MILLET, BROWN TOP * MILLET, PEARL SUDAN GRASS	40 lbs. 50 lbs. 60 lbs.	10 lbs. – –	BAHIA, PENSACOLA BERMUDA, UNHULLED CENTIPEDE, SOD * LESPEDEZA, SEDICEA 1 LESPEDEZA, SEDICEA 2	60 lbs. 10 lbs. – 75 lbs. 75 lbs.	30 lbs. 6 lbs. – – –
MAY	MILLET, BROWN TOP MILLET, PEARL SUDAN GRASS	40 lbs. 50 lbs. 60 lbs.	10 lbs. – –	BAHIA, PENSACOLA BERMUDA, UNHULLED CENTIPEDE, SOD * LESPEDEZA, SEDICEA 1 LESPEDEZA, SEDICEA 2	60 lbs. 10 lbs. – 75 lbs. 75 lbs.	30 lbs. 6 lbs. – – –
JUNE	MILLET, BROWN TOP MILLET, PEARL SUDAN GRASS	40 lbs. 50 lbs. 60 lbs.	10 lbs. – –	BAHIA, PENSACOLA * BERMUDA, UNHULLED * LESPEDEZA, SEDICEA 1 * LESPEDEZA, SEDICEA 2	60 lbs. 10 lbs. 75 lbs. 75 lbs.	30 lbs. 6 lbs. – –
JULY	* MILLET, BROWN TOP MILLET, PEARL SUDAN GRASS	40 lbs. 50 lbs. 60 lbs.	10 lbs. – –	* BAHIA, PENSACOLA * LESPEDEZA, SEDICEA 1	60 lbs. 75 lbs.	30 lbs. –
AUGUST	* MILLET, PEARL * RYE GRASS, ANNUAL	50 lbs. 40 lbs.	– –	* BAHIA, PENSACOLA * LESPEDEZA, SEDICEA 1	60 lbs. 75 lbs.	30 lbs. –
SEPTEMBER	* BARLEY * OATS * RYE RYE GRASS, ANNUAL * WHEAT	3 bu. 4 bu. 3 bu. 40 lbs. 3 bu.	.5 bu. 1 bu. .5 bu. – .5 bu.	* BAHIA, PENSACOLA LESPEDEZA, SEDICEA 1	60 lbs. 75 lbs.	30 lbs. –
OCTOBER	BARLEY OATS RYE RYE GRASS, ANNUAL WHEAT	3 bu. 4 bu. 3 bu. 40 lbs. 3 bu.	.5 bu. 1 bu. .5 bu. – .5 bu.	* BAHIA, PENSACOLA LESPEDEZA, SEDICEA 1	60 lbs. 75 lbs.	30 lbs. –
NOVEMBER	BARLEY OATS RYE RYE GRASS, ANNUAL WHEAT	3 bu. 4 bu. 3 bu. 40 lbs. 3 bu.	.5 bu. 1 bu. .5 bu. – .5 bu.	* BAHIA, PENSACOLA BERMUDA, UNHULLED CENTIPEDE, SOD LESPEDEZA, SEDICEA 1	60 lbs. 10 lbs. – 75 lbs.	30 lbs. 6 lbs. – –
DECEMBER	BARLEY OATS RYE RYE GRASS, ANNUAL WHEAT	3 bu. 4 bu. 3 bu. 40 lbs. 3 bu.	.5 bu. 1 bu. .5 bu. – .5 bu.	* BAHIA, PENSACOLA BERMUDA, UNHULLED CENTIPEDE, SOD LESPEDEZA, SEDICEA 1	60 lbs. 10 lbs. – 75 lbs.	30 lbs. 6 lbs. – –

NOTES
ALL PERMANENT GRASS PLANTINGS SHALL BE MULCHED AND CRIMPED IN PLACE OR PROTECTED WITH EROSION MATTING TO ENSURE PROPER STABILIZATION. (SLOPES 6:1 OR GREATER MUST BE PROTECTED WITH EROSION MATTING)
** INDICATES MARGINAL (BUT PERMISSIBLE) PLANTING DATE*
1. UNSCARIFIED
2. SCARIFIED
3. CENTIPEDE SOD CAN BE USED AS PERMANENT COVER ANYTIME EXCEPT JUNE THRU OCTOBER

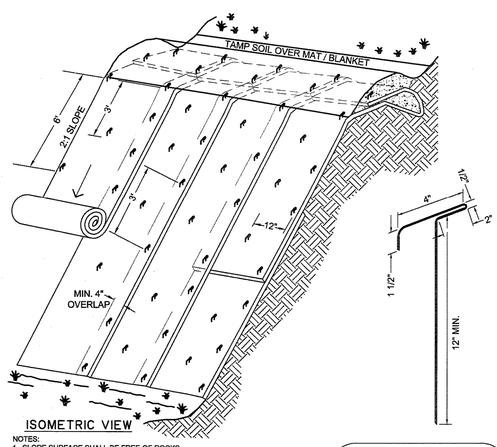

ISOMETRIC VIEW

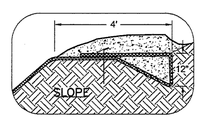

NOTES:
1. SLOPE SURFACE SHALL BE FREE OF ROCKS CLODS, STICKS AND GRASS. MATS / BLANKETS SHALL HAVE GOOD SOIL CONTACT.
2. APPLY PERMANENT SEEDING BEFORE PLACING BLANKETS.
3. LAY BLANKETS LOOSELY AND STAKE OR STAPLE TO MAINTAIN DIRECT CONTACT WITH THE SOIL. DO NOT STRETCH.
4. BLANKETS SHALL BE BIODEGRADABLE EROSION CONTROL MATTING/BLANKET.
5. ALL SLOPES 6:1 OR GREATER AND ALL SWALES SHALL BE STABILIZED WITH MATTING/BLANKET.
6. CONTRACTOR RESPONSIBLE FOR MAINTENANCE, REPAIR AND/OR REPLACEMENT AS REQUIRED THROUGHOUT CONSTRUCTION.

EROSION CONTROL MATTING

NOT TO SCALE

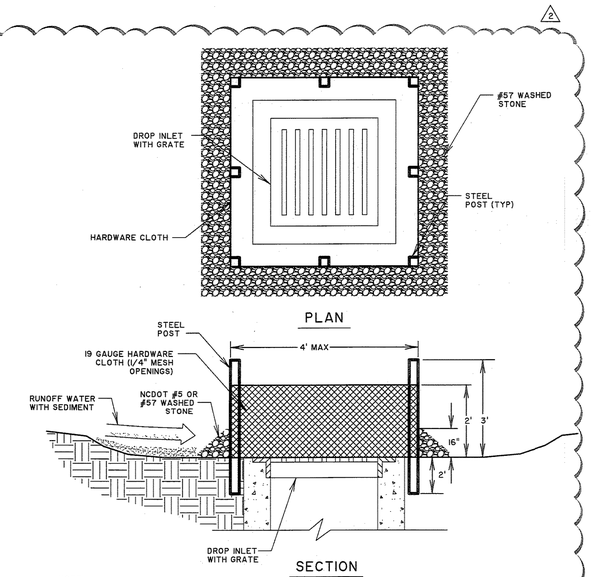

NOTE:
THIS METHOD OF INLET PROTECTION IS APPLICABLE WHERE THE INLET DRAINS A RELATIVELY FLAT AREA (SLOPES NO GREATER THAN 5 PERCENT, LESS THAN 1 ACRE) WHERE SHEET OR OVERLAND FLOWS (NOT EXCEEDING 0.5 CFS) ARE TYPICAL.

INLETS IN PAVED AREAS - ONCE PAVED, PROTECT INLET USING A SILT SACK UNTIL THE CONTRIBUTING DRAINAGE AREA IS PERMANENTLY STABILIZED. SEE DETAIL ON SHEET C6.1.

CONSTRUCTION SPECIFICATIONS

DROP INLET SEDIMENT FILTER

1. UNIFORMLY GRADE A SHALLOW DEPRESSION APPROACHING THE INLET.
2. DRIVE 5-FOOT STEEL POSTS 2 FEET INTO THE GROUND SURROUNDING THE INLET. SPACE POSTS EVENLY AROUND THE PERIMETER OF THE INLET, A MAXIMUM OF 4' APART.
3. SURROUND THE POSTS WITH WIRE MESH HARDWARE CLOTH. SECURE THE WIRE MESH TO THE STEEL POSTS AT THE TOP, MIDDLE, AND BOTTOM. PLACING A 2-FOOT FLAP OF WIRE MESH UNDER THE GRAVEL FOR ANCHORING IS RECOMMENDED.
4. PLACE LEAN GRAVEL (NCDOT #5 OR #57 STONE) ON A 2:1 SLOPE WITH A HEIGHT OF 16" AROUND THE WIRE, AND SMOOTH TO AN EVEN GRADE.
5. ONCE THE CONTRIBUTING DRAINAGE AREA HAS BEEN STABILIZED, REMOVE ACCUMULATED SEDIMENT AND ESTABLISH FINAL GRADING ELEVATIONS.
6. COMPACT THE AREA PROPERLY AND STABILIZE IT WITH GROUNDCOVER.

HARDWARE CLOTH AND GRAVEL INLET PROTECTION

NOT TO SCALE

THOMAS & HUTTON
Engineering | Surveying | Planning | GIS | Consulting
215 South Kerr Avenue • Unit B
Wilmington, NC 28403 • 910.332.3360
www.thomasandhutton.com
Savannah, GA | Brunswick, GA | Charleston, SC | Myrtle Beach, SC

NORTH CAROLINA PROFESSIONAL SEAL 29535 ENGINEER JOHN H. RICHARDS
20 MAR 13

NORTH CAROLINA THOMAS & HUTTON ENGINEERING CO. No. F-0871 CERTIFICATE OF AUTHORIZATION

△ 3-20-13 REVISED PER COUNTY

CONTRACT DATE: XX.XX.XX
BUILDING TYPE: LARGE 50 NI
PLAN VERSION: AUGUST 2012
SITE NUMBER: 12-0276
STORE NUMBER: XXXXX

TACO BELL
4422 SOUTH 17TH STREET
FULTON STATION, NC

LARGE 50 Ni

SHEET TITLE:
EROSION CONTROL DETAILS

JOB NO: J-24078.0001
DATE: 02-12-2013
DRAWN BY: KWL
DESIGNED: KWL
REVIEWED: JHR
APPROVED: JHR
SCALE: 1" = 1'

SHEET NO:
EC1.2

North Carolina
One Call Center
Call Before You Dig
"It's The Law"
1-800-632-4949

WATER LEGEND

DESCRIPTION	EXISTING	PROPOSED
SINGLE SERVICE LATERAL		
VALVE AND BOX		
REDUCER		
BACKFLOW PREVENTOR		
CROSS		
TEE		
90° BEND - HORIZONTAL		
45° BEND - HORIZONTAL		
22-½° BEND - HORIZONTAL		
11-¼° BEND - HORIZONTAL		
BEND - VERTICAL		
CAP		

SEWER LEGEND

DESCRIPTION	EXISTING	PROPOSED
SINGLE SERVICE LATERAL		
MANHOLE		
CLEANOUT		
FORCEMAIN	10"FM	10"FM
VALVE AND BOX		
TEE		
90° BEND - HORIZONTAL		
45° BEND - HORIZONTAL		
22-½° BEND - HORIZONTAL		
11-¼° BEND - HORIZONTAL		
BEND - VERTICAL		
PLUG		

ABBREVIATIONS

HDPE	HIGH DENSITY POLYETHELENE		LF	LINEAR FEET		SF	SQUARE FEET
BOT	BOTTOM		MAX	MAXIMUM		SS	SANITARY SEWER
FH	FIRE HYDRANT		MIN	MINIMUM		TYP	TYPICAL
W	WATER		MH	MANHOLE		W/	WITH
WV	WATER VALVE		PVC	POLYVINYL CHLORIDE		R/W	RIGHT-OF-WAY

NOTES:

1. ALL WATER AND SEWER SHALL BE IN STRICT ACCORDANCE WITH THE SPECIFICATIONS OF CAPE FEAR PUBLIC UTILITIES AUTHORITY (CFPUA) AND THE NORTH CAROLINA DEPARTMENT OF ENVIRONMENT AND NATURAL RESOURCES.
2. WATER SERVICE SHALL BE PVC OR BRASS AS REQUIRED BY CFPUA.
3. SEWER SERVICE PIPING SHALL BE PVC SCH. 40. ALL MAIN PIPING SHALL BE MARKED WITH DETECTION TAPE AS PROVIDED IN THE SPECIFICATIONS.
4. LOCATIONS OF EXISTING UTILITIES AND MAIN LINES WERE TAKEN FROM SURVEY PREPARED BY OTHERS. IT IS THE CONTRACTOR'S RESPONSIBILITY TO LOCATE ALL UTILITIES PRIOR TO CONSTRUCTION. DAMAGE TO EXISTING UTILITIES WILL BE THE RESPONSIBILITY OF THE CONTRACTOR.
5. THE CONTRACTOR SHALL BE RESPONSIBLE FOR PROVIDING THE ENGINEER RECORD DRAWINGS OF THE WATER AND SEWER SERVICES AND MAINS AND ANY DEVIATIONS FROM THE PLANS. THE RECORD DRAWINGS SHALL INDICATE AT LEAST 2 DIMENSIONS TO PER LOCATION TO PERMANENT FIXTURES IN CLOSE PROXIMITY FROM POINTS ALONG THE MAIN AND ANY BENDS OR UNDERGROUND FITTINGS.
6. CONTRACTOR RESPONSIBLE FOR PROVIDING ALL FITTINGS NECESSARY TO MAKE SERVICE CONNECTIONS TO BUILDING.

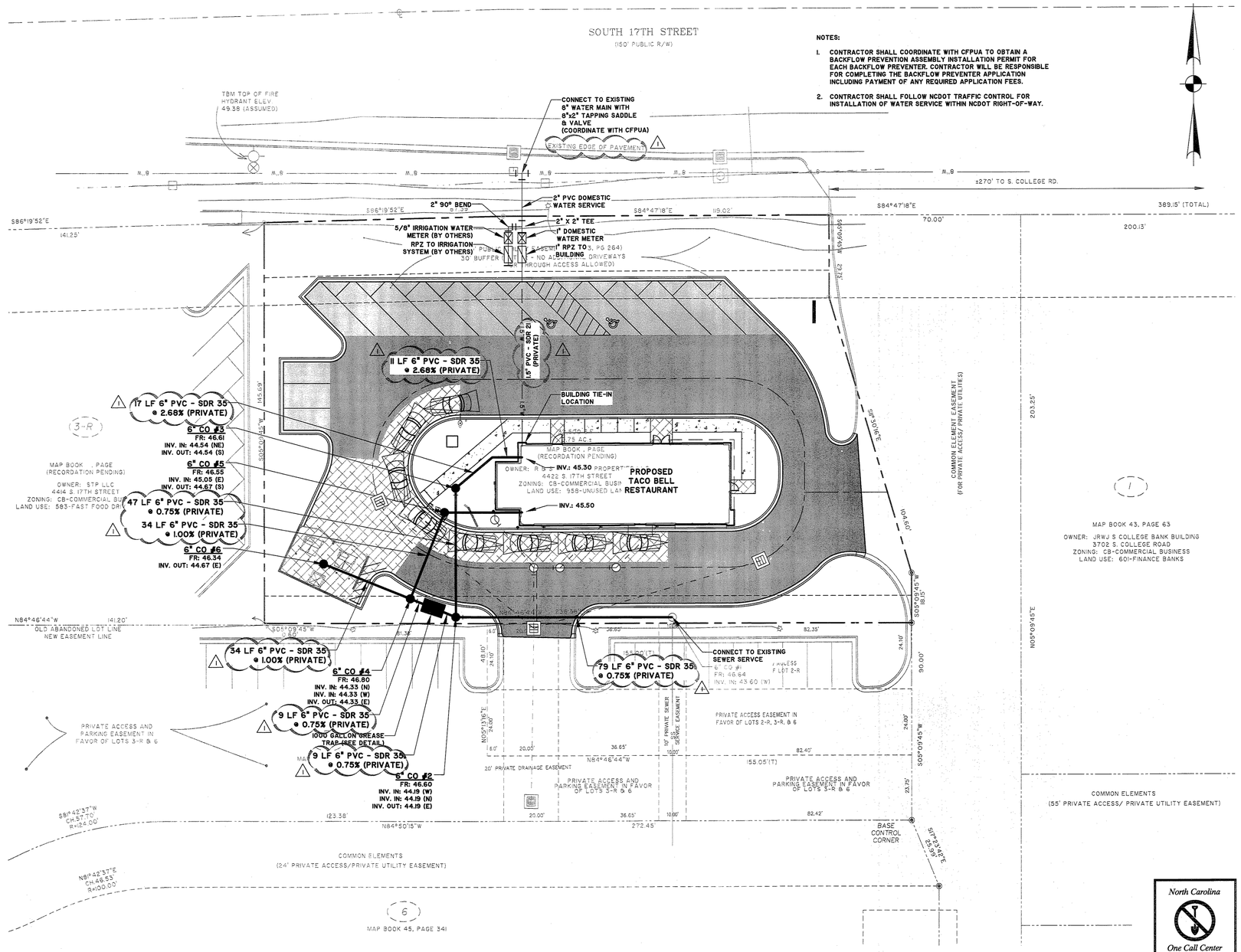

North Carolina
One Call Center
Call Before You Dig
"It's The Law"
1-800-632-4949

THOMAS & HUTTON
Engineering | Surveying | Planning | GIS | Consulting
215 South Kerr Avenue • Unit B
Wilmington, NC 28403 • 910.392.3360
www.thomasandhutton.com
Savannah, GA | Brunswick, GA | Charleston, SC | Myrtle Beach, SC

NORTH CAROLINA PROFESSIONAL SEAL 20589 ENGINEER JOHN H. RICHARDS
20 MAR 13

NORTH CAROLINA THOMAS & HUTTON ENGINEERING CO. No. F-0871 CERTIFICATE OF AUTHORIZATION

△ 3-20-13 REVISED PER CITY

CONTRACT DATE:	XX.XX.XX
BUILDING TYPE:	LARGE 50 Ni
PLAN VERSION:	AUGUST 2012
SITE NUMBER:	12-0276
STORE NUMBER:	XXXXX

TACO BELL

4422 SOUTH 17TH STREET
FULTON STATION, NC

TACO BELL
LARGE 50 Ni

SHEET TITLE:

WATER AND SEWER PLAN

JOB NO:	J-24078.0001
DATE:	02-12-2013
DRAWN BY:	KWL
DESIGNED:	KWL
REVIEWED:	JHR
APPROVED:	JHR
SCALE:	1" = 20'

SHEET NO:

C2.1

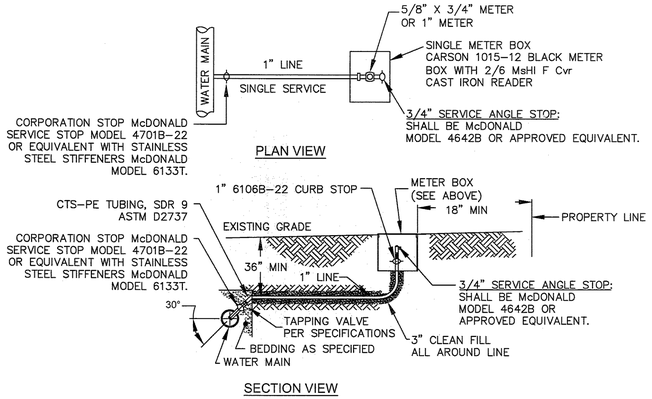

NOTES:
1. NO JOINT SHALL BE INSTALLED BETWEEN THE MAIN SERVICE TAP AND THE METER STOP. ALL SERVICES SHALL BE INSTALLED PERPENDICULAR TO MAIN.
2. SERVICE SADDLES ON PVC MAINS SHALL BE WIDE BAND BRASS BODY: SADDLE McDONALD 3801 OR EQUIVALENT
3. METER BOXES SUSCEPTIBLE TO TRAFFIC SHALL CONFORM TO ASTM A48, CLASS 30B AND AASHTO H20 LOAD RATING STANDARDS (SIP MODEL 4240 OR APPROVED EQUIVALENT)

SINGLE SERVICE CONNECTION

TYPICAL WATER SERVICE CONNECTION FOR RESIDENTIAL SINGLE FAMILY HOME ON CFPUA WATER SYSTEM

NOT TO SCALE

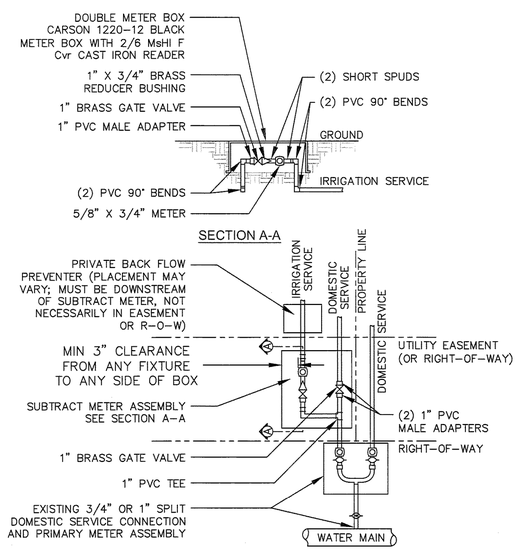

NOTES:
-BEYOND THE PRIMARY DOMESTIC METER ASSEMBLY, CFPUA IS ONLY RESPONSIBLE FOR METER AND WASHERS OF SUBTRACT METER ASSEMBLY
-ALL PIPE AND FITTINGS UP TO FINAL SERVICE LINE TO BE 1" EXCLUDING METERS

PLAN VIEW

DOUBLE SERVICE CONNECTION USING SUBTRACT METER

(MULTIPLE DOMESTIC SERVICES PER TAP)

NOT TO SCALE

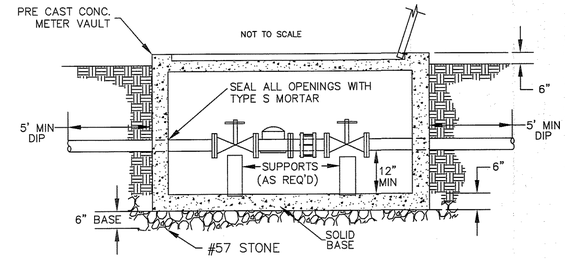

METER VAULT SECTION A-A

NOT TO SCALE

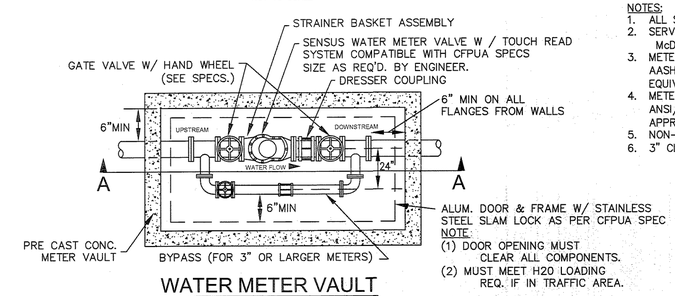

NOTE:
(1) DOOR OPENING MUST CLEAR ALL COMPONENTS.
(2) MUST MEET H20 LOADING REQ. IF IN TRAFFIC AREA.

WATER METER VAULT

FOR WATER METERS LARGER THAN 2"

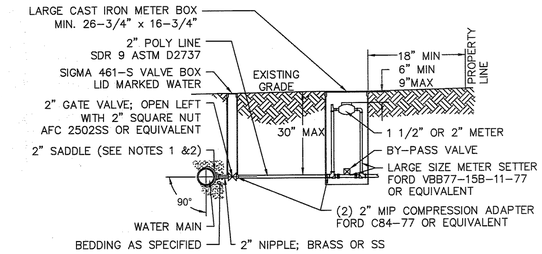

NOTES:
1. ALL SERVICES SHALL BE INSTALLED PERPENDICULAR TO MAIN.
2. SERVICE SADDLES ON PVC MAINS SHALL BE WIDE BAND BRASS BODY: McDONALD 3800, FORD S90 (DOUBLE STRAP) OR EQUIVALENT.
3. METER BOXES SUSCEPTIBLE TO TRAFFIC SHALL CONFORM TO ASTM A48, CLASS 30B AND AASHTO H20 LOAD RATING STANDARDS (OLDCASTLE PRECAST MODEL B1730 OR APPROVED EQUIVALENT).
4. METER BOXES SUSCEPTIBLE TO INCIDENTAL, NON-DELIBERATE TRAFFIC SHALL CONFORM TO ANSI/SCTE 77 TIER 15 LOAD RATING STANDARDS (SYNERTECH MODEL DUO 17x30 OR APPROVED EQUIVALENT).
5. NON-TRAFFIC METER BOXES SHALL BE SIGMA MB2203 OR APPROVED EQUIVALENT.
6. 3" CLEAN FILL REQUIRED ALL AROUND 2" POLY SERVICE LINE.

LARGE METER

FOR 1 1/2" OR 2" WATER SERVICES

NOT TO SCALE

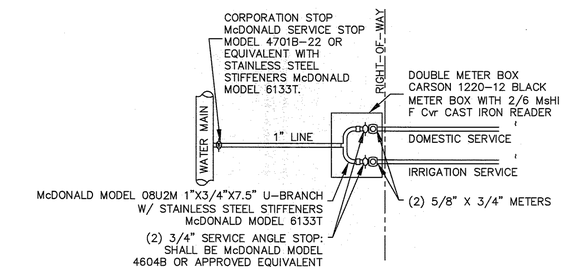

PLAN VIEW

DOUBLE SERVICE CONNECTION

(ONE DOMESTIC SERVICE PER TAP)

NOT TO SCALE

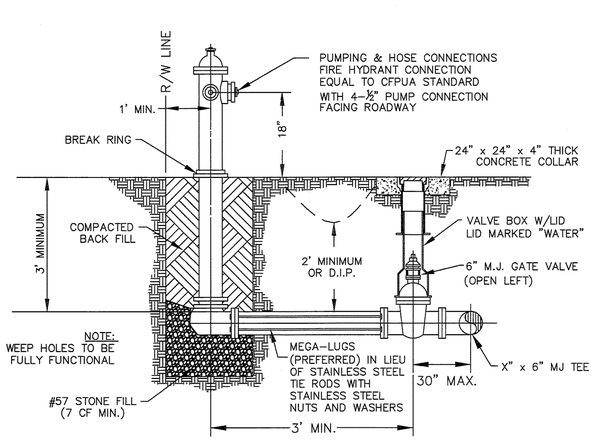

FIRE HYDRANT ASSEMBLY

NOT TO SCALE

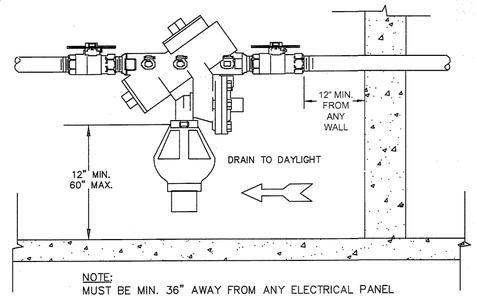

NOTE:
MUST BE MIN. 36" AWAY FROM ANY ELECTRICAL PANEL

INDOOR HORIZONTAL INSTALLATION

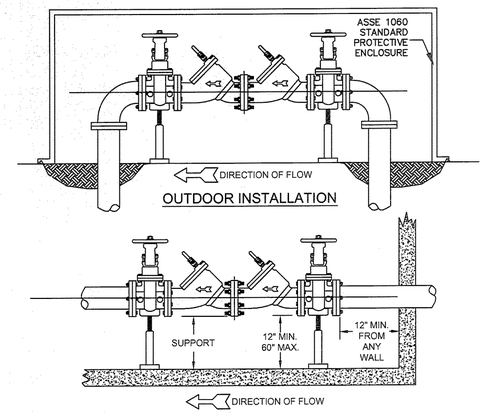

NOTE:
1. MUST BE MIN. 36" AWAY FROM ANY ELECTRICAL PANEL
2. VALVE REQ'D DOWNSTREAM OF BACKFLOW ASSEMBLY
3. VERTICAL INSTALLATION SHALL BE DESIGNED AND SUBMITTED TO CFPUA ESMD FOR APPROVAL

INDOOR INSTALLATION

DOUBLE CHECK VALVE ASSEMBLY

NOT TO SCALE

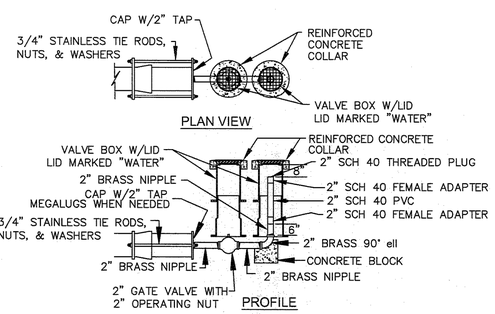

2" BLOW-OFF

NOT TO SCALE

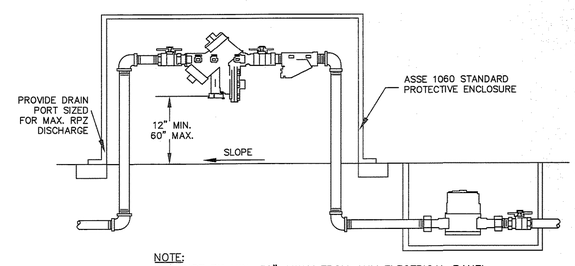

NOTE:
1. MUST BE MIN. 36" AWAY FROM ANY ELECTRICAL PANEL
2. VALVE REQ'D DOWNSTREAM OF BACKFLOW ASSEMBLY
3. VERTICAL INSTALLATION SHALL BE DESIGNED AND SUBMITTED TO CFPUA ESMD FOR APPROVAL

OUTDOOR HORIZONTAL INSTALLATION

REDUCED PRESSURE PRINCIPLE ASSEMBLY

NOT TO SCALE

GENERAL NOTES:

1. NO EXCAVATED MATERIAL SHALL BE PLACED IN ANY STREAM, DITCH OR DRAINAGE-WAY.
2. THE CONTRACTOR IS RESPONSIBLE FOR LOCATING ALL UNDERGROUND UTILITIES BEFORE ANY CONSTRUCTION BEGINS.
3. THE CONTRACTOR IS RESPONSIBLE FOR TEMPORARY SEDIMENT AND EROSION CONTROL MEASURES WHILE CONSTRUCTION IS IN PROGRESS.
4. THE CONTRACTOR IS RESPONSIBLE FOR STABILIZATION OF ALL DISTURBED AREAS.
5. THE CONTRACTOR IS RESPONSIBLE FOR LAY DOWN & STOCKPILE AREAS (TO ARRANGE AND ENSURE COMPLIANCE WITH ALL LOCAL AND STATE REGULATIONS).

THE DETAILS SHOWN HEREON SUPERCEDE CFPUA WRITTEN TECHNICAL SPECIFICATIONS VERSIONS 1.00 - 1.04

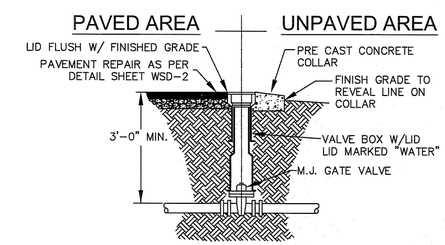

VALVE DETAIL

NOT TO SCALE

REV:	DESCRIPTION:	DATE:
1	Single Service Connection, Double Service Connection, and Large Meter Revised	10/26/12

NORTH CAROLINA PROFESSIONAL SEAL 025929 ENGINEER JOHN H. RICHARDS 30 MAR 13

THOMAS & HUTTON ENGINEERS F-0571 NORTH CAROLINA CERTIFICATE OF AUTHORIZATION

CFPUA WATER DISTRIBUTION SYSTEM

STANDARD DETAILS

CAPE FEAR PUBLIC UTILITY AUTHORITY
235 GOVERNMENT CENTER DRIVE
WILMINGTON, NC 28403
OFFICE: (910)332-6560

Stewardship. Sustainability. Service.

DATE: 1/9/12
SCALE: N/A
DRAWN BY: CFPUA
CHECKED BY: CFPUA
PROJECT NO. :

SHEET NO: WSD-1

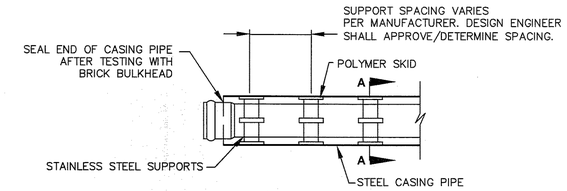

NOTE: PIPE SUPPORT TO BE PLACED TO PROVIDE PROPER SUPPORT, ALIGNMENT, AND GRADE AS SPECIFIED. CONTINUOUS SUPPORTS MAY BE USED AS ALTERNATIVE. OIL, GREASE, OR PETROLEUM PRODUCT MAY NOT BE USED AS LUBRICANT.

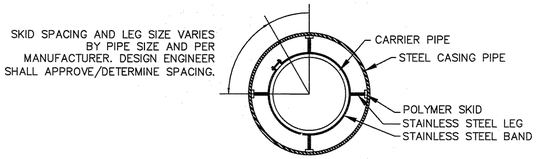

SECTION A-A

NOT TO SCALE

PIPE CASING SUPPORT DETAIL

NOT TO SCALE

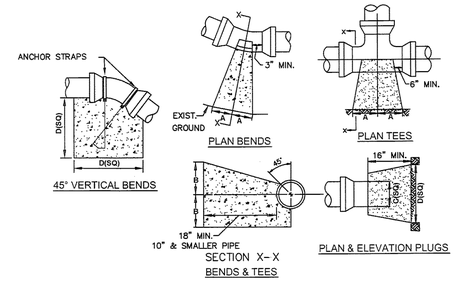

SIZE	90° BENDS		45° BENDS		22 1/2° BENDS		TEES/PLUGS		45° VERT. BENDS
	A	B	A	B	A	B	A	B	
3"	8"	6"	5"	6"	3"	7"	6"	8"	27"
4"	8"	9"	5"	8"	3"	11"	6"	9"	28"
6"	14"	11"	9"	9"	8"	8"	12"	9"	36"
8"	16"	16"	12"	12"	10"	13"	14"	13"	42"
10"	18"	22"	15"	14"	14"	16"	18"	15"	50"
12"	20"	28"	18"	17"	16"	16"	22"	18"	62"
14"	26"	29"	21"	19"	18"	18"	26"	20"	72"
16"	33"	29"	25"	21"	20"	21"	32"	21"	83"
18"	40"	30"	28"	24"	22"	23"	36"	24"	88"

NOTES: 1. BASED ON 160 PSI TEST PRESSURE AND 2000 PSF SOIL BEARING CAPACITY.
2. ALL BEARING SURFACES TO BE CARRIED TO UNDISTURBED GROUND.
3. USE MEG-A-LUG (PREFERRED) IN LIEU OF BLOCKING AND RODDING.

THRUST BLOCK DETAIL

NOT TO SCALE

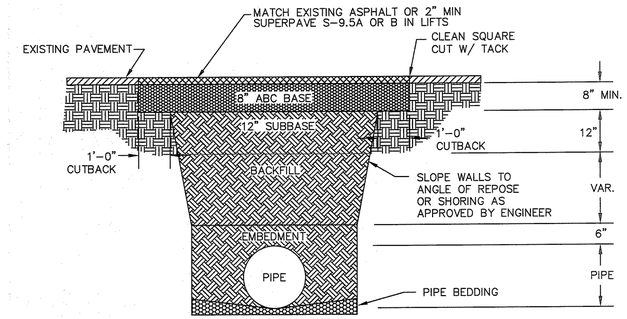

NOTES:
1. BACKFILL SHALL BE SUITABLE MATERIAL THAT IS FREE FROM HEAVY CLAY, GUMBOS, DEBRIS, ORGANICS AND LITTLE TO NO EXCESSIVE MOISTURE.
2. SELECT BACKFILL MAY BE SUBSTITUTED OR REQUIRED BY CITY TO ACHIEVE COMPACTION, (I.E. #57, ABC, CRUSHED LIMESTONE, CLEAN SAND, FLOWABLE FILL, ETC).
3. 8-INCH OF ABC BASE MATERIAL SHALL BE USED ON CITY STREETS.
4. BACKFILL AND BASE MATERIALS SHALL BE COMPACTED 12" MINIMUM LIFTS
5. SOIL SHALL BE COMPACTED BY A MECHANIZED TAMPER (I.E JUMPING JACK), HOWEVER, VIBRATORY ROLLERS > 18" WIDTH MAY BE USED FOR LARGER EXCAVATIONS. THE PLATE TAMP METHOD SHALL NOT BE USED.
6. ALL APPROVED CASTINGS SHALL BE SET FLUSH TO GRADE AND SUPPORTED IF APPLICABLE.
7. ABC BASE AND SUBBASE COMPACTED TO 98% AND BACKFILL AND EMBEDMENT COMPACTED TO 90% AS DETERMINED BY THE MODIFIED PROCTOR AASHTO METHOD T-99.
8. 1-FOOT CUTBACKS OF ASPHALT SHALL BE PREPARED ON UNDISTURBED SOIL. MINIMUM ASPHALT DENSITY IS 90%.

PAVEMENT REPAIR WHERE PIPE INSTALLED

(FOR PRIVATE ROADS AND PAVED AREAS;
CONTRACTOR TO MEET MIN. REQUIREMENTS AS DEFINED BY
RIGHT-OF-WAY OWNER FOR PUBLIC ROAD REPAIRS)

NOT TO SCALE

NOTE:
PAVEMENT WIDTH AND LOCATION IN R/W VARIES. SEE PLAN FOR INDIVIDUAL LOCATION.

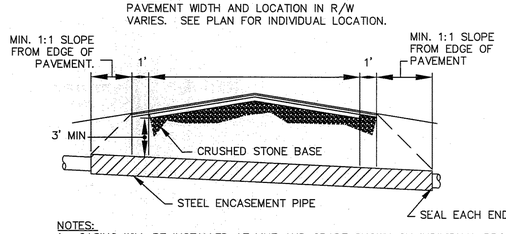

NOTES:
1. CASING WILL BE INSTALLED AT LINE AND GRADE SHOWN ON INDIVIDUAL PROFILE FOR EACH CROSSING. BORING/JACKING TO LINE AND GRADE IS REQUIRED.
2. TRACER WIRE SHALL BE CONTINUED THROUGH CASING

TYPICAL BORING/JACKING DETAIL

NOT TO SCALE

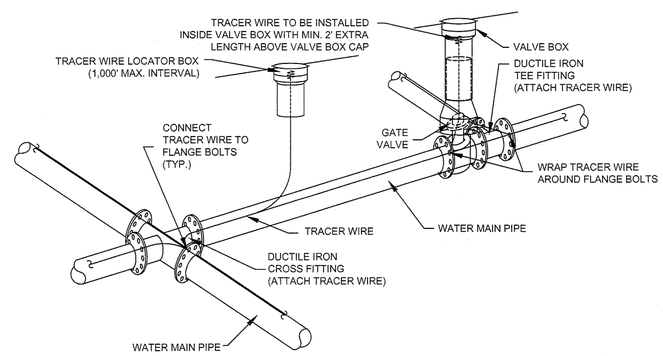

NOTES:
1. TRACER WIRE SHALL BE #10 COPPER SOLID CORE COPPER WIRE WITH GAS AND OIL RESISTANT INSULATION
2. WIRE SHALL BE STRAPPED TO ALL PVC WATER MAIN PIPING WITH DUCT TAPE AT 12-FT. INTERVALS.
3. SECURE WIRE TO ALL TEE AND CROSS FITTINGS.
4. ALL WIRE SPLICES SHALL HAVE WATER PROOF WIRE CONNECTIONS.

TRACER WIRE DETAIL

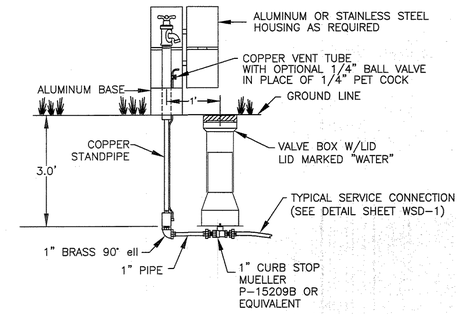

SAMPLING STATION

NOT TO SCALE

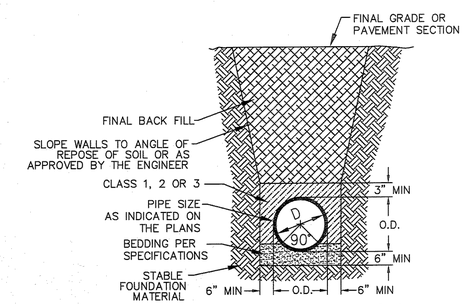

CL 50 DUCTILE IRON DR 18 PVC PIPE TRENCH DETAIL

NOT TO SCALE

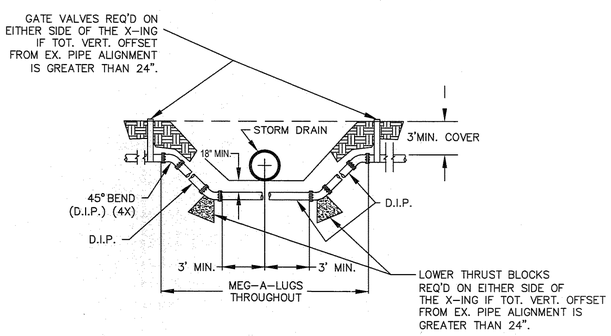

NOTE: USE D.I.P. (CL50 OR BETTER)

WATER MAIN DITCH & STORM DRAIN CROSSING

NOT TO SCALE

GENERAL NOTES:

1. NO EXCAVATED MATERIAL SHALL BE PLACED IN ANY STREAM, DITCH OR DRAINAGE-WAY.
2. THE CONTRACTOR IS RESPONSIBLE FOR LOCATING ALL UNDERGROUND UTILITIES BEFORE ANY CONSTRUCTION BEGINS.
3. THE CONTRACTOR IS RESPONSIBLE FOR TEMPORARY SEDIMENT AND EROSION CONTROL MEASURES WHILE CONSTRUCTION IS IN PROGRESS.
4. THE CONTRACTOR IS RESPONSIBLE FOR STABILIZATION OF ALL DISTURBED AREAS.
5. THE CONTRACTOR IS RESPONSIBLE FOR LAY DOWN & STOCKPILE AREAS (TO ARRANGE AND ENSURE COMPLIANCE WITH ALL LOCAL AND STATE REGULATIONS).

THE DETAILS SHOWN HEREON SUPERCEDE CFPUA WRITTEN TECHNICAL SPECIFICATIONS VERSIONS 1.00 - 1.04

NORTH CAROLINA THOMAS & HUTTON ENGINEERS F-0371 CERTIFICATE OF AUTHORIZATION

REV:	DESCRIPTION:	DATE:

NORTH CAROLINA PROFESSIONAL SEAL 025930 ENGINEER JOHN H. RICHARDS 26 MAR 13

CFPUA WATER DISTRIBUTION SYSTEM

STANDARD DETAILS

CAPE FEAR PUBLIC UTILITY AUTHORITY
235 GOVERNMENT CENTER DRIVE
WILMINGTON, NC 28403
OFFICE: (910)332-6560
Stewardship. Sustainability. Service.

DATE: 1/9/12
SCALE: N/A
DRAWN BY: CFPUA
CHECKED BY: CFPUA
PROJECT NO.:

SHEET NO: WSD-2

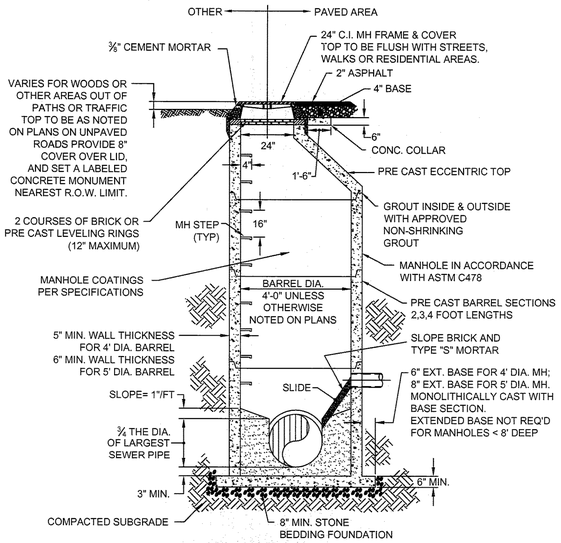

PRECAST CONCRETE OFFSET MANHOLE TYPICAL

(LESS THAN 30" DROP)
NOT TO SCALE

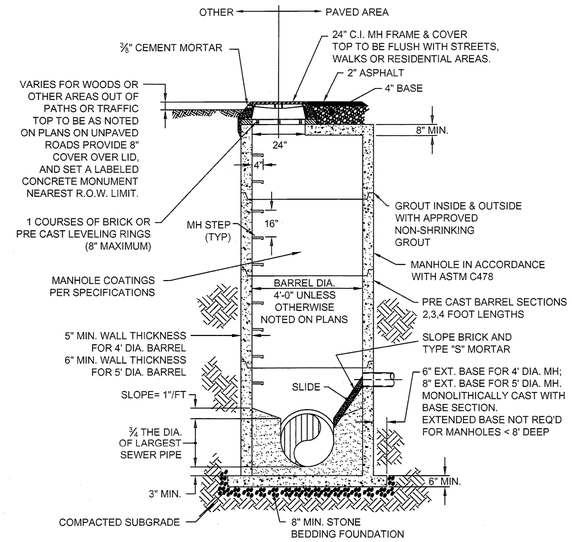

PRECAST CONCRETE FLAT TOP MANHOLE TYPICAL

(LESS THAN 30" DROP)
NOT TO SCALE

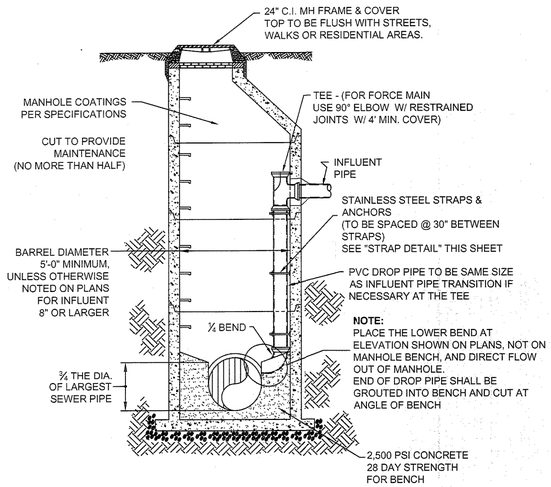

DROP MANHOLE

(MORE THAN 30" DROP)
NOT TO SCALE

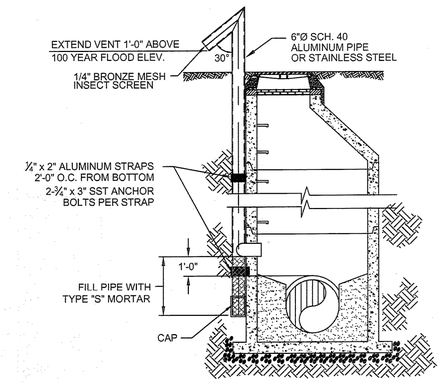

STANDARD VENT MANHOLE

NOT TO SCALE

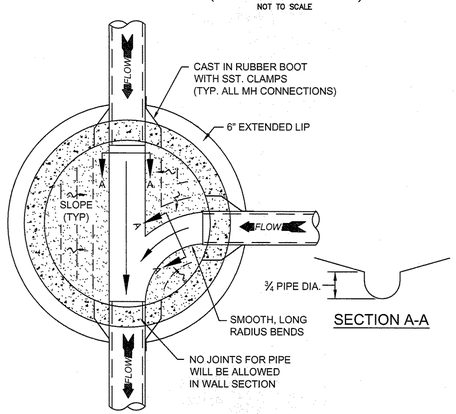

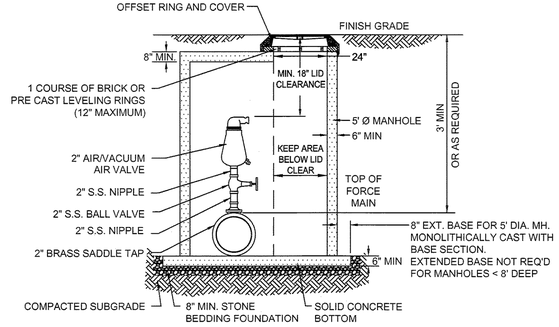

MANHOLE FLOOR PLAN

NOT TO SCALE

NOTES:
1. CONTRACTOR TO INSTALL VALVE & MANHOLE AT SUFFICIENT DEPTH TO ALLOW FOR ACCESS.
2. FORCE MAIN TO BE OFFSET IN MANHOLE TO KEEP AREA BELOW LID CLEAR.
3. REFER TO SPECIFICATIONS FOR ADDITIONAL DETAILS.
4. USE CAST IN RUBBER BOOT WITH SST. CLAMPS FOR ALL MH CONNECTIONS INCLUDING FORCE MAIN.

AIR / VACUUM AND AIR RELEASE COMBINATION VALVE

NOT TO SCALE

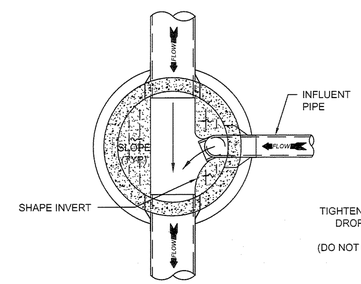

DROP MANHOLE FLOOR PLAN

NOT TO SCALE

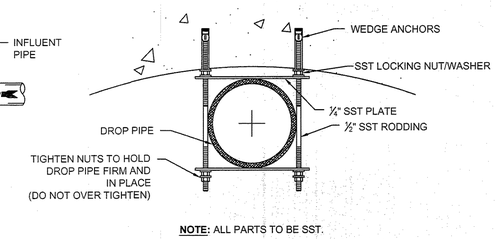

NOTE: ALL PARTS TO BE SST.

STRAP DETAIL

NOT TO SCALE

CAPE FEAR PUBLIC UTILITY AUTHORITY STANDARD SEWER NOTES:

1. SEWER GUARDS REQUIRED AT ALL MANHOLES. STAINLESS STEEL SEWER GUARDS REQUIRED AT MANHOLES LOCATED IN TRAFFIC AREAS.
2. SERVICES SHALL BE PERPENDICULAR TO MAIN AND TERMINATE AT RIGHT-OF-WAY LINE. SERVICES IN CUL-DE-SACS ARE REQUIRED TO BE PERPENDICULAR, OR MUST ORIGINATE IN MANHOLE AND TERMINATE AT RIGHT-OF-WAY LINE.
3. ALL SERVICES TYING INTO DUCTILE IRON MAINS SHALL BE CONSTRUCTED OF CLASS 50, DIP, WITH PROTECTO 401 CERAMIC EPOXY LINING.
4. MINIMUM 10' UTILITIES EASEMENT PROVIDED ALONG THE FRONTAGE OF ALL LOTS AND AS SHOWN FOR NEW DEVELOPMENTS.
5. NO FLEXIBLE COUPLINGS SHALL BE USED.
6. ALL STAINLESS STEEL FASTENERS SHALL BE 316.

STANDARD SEWER NOTES

(REQUIRED ON ALL SEWER PLAN AND PROFILE SHEETS)

GENERAL NOTES:

1. NO EXCAVATED MATERIAL SHALL BE PLACED IN ANY STREAM, DITCH OR DRAINAGE-WAY.
2. THE CONTRACTOR IS RESPONSIBLE FOR LOCATING ALL UNDERGROUND UTILITIES BEFORE ANY CONSTRUCTION BEGINS.
3. THE CONTRACTOR IS RESPONSIBLE FOR TEMPORARY SEDIMENT AND EROSION CONTROL MEASURES WHILE CONSTRUCTION IS IN PROGRESS.
4. THE CONTRACTOR IS RESPONSIBLE FOR STABILIZATION OF ALL DISTURBED AREAS.
5. THE CONTRACTOR IS RESPONSIBLE FOR LAY DOWN & STOCKPILE AREAS (TO ARRANGE AND INSURE COMPLIANCE WITH ALL LOCAL AND STATE REGULATIONS).

THE DETAILS SHOWN HEREON SUPERCEDE CFPUA WRITTEN TECHNICAL SPECIFICATIONS VERSIONS 1.00 - 1.04

NORTH CAROLINA
THOMAS & HUTTON ENGINEERS
F-0371
CERTIFICATE OF AUTHORIZATION

REV:	DESCRIPTION:	DATE:
1	AIR / VACUUM AND AIR RELEASE COMBINATION VALVE REVISED	10/26/12
2	STANDARD SEWER NOTE #6 REVISED	12/10/12

NORTH CAROLINA PROFESSIONAL SEAL 025989 ENGINEER JOHN H. RICHARDS
25 MAR 13

CFPUA SANITARY SEWER

STANDARD DETAILS

CAPE FEAR PUBLIC UTILITY AUTHORITY
235 GOVERNMENT CENTER DRIVE
WILMINGTON, NC 28403
OFFICE: (910)332-6560
Stewardship. Sustainability. Service.

DATE: 1/9/12
SCALE: N/A
DRAWN BY: CFPUA
CHECKED BY: CFPUA
PROJECT NO.:

SHEET NO: SSD-1

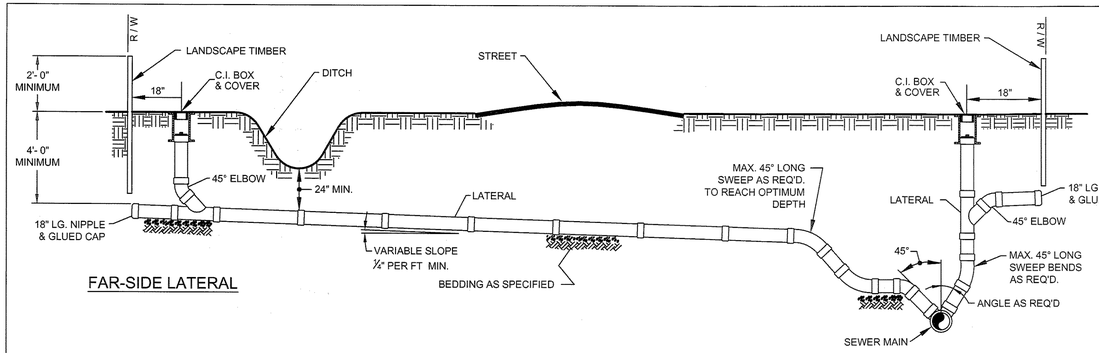

FAR-SIDE LATERAL

NEAR-SIDE LATERAL WITH RIGHT-OF-WAY RESTRICTIONS

NOTE: FOR PRIVATE 8" SERVICES, MANHOLES ARE REQUIRED FOR TIE–IN TO MAIN

STANDARD SERVICE CONNECTION TO SANITARY SEWER

NOT TO SCALE

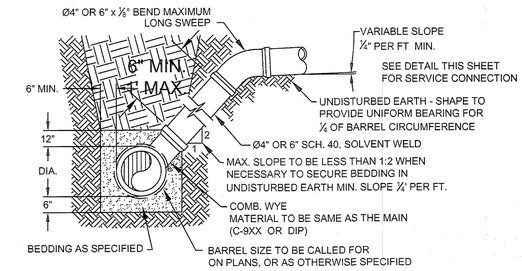

NOTE: FOR PRIVATE 8" SERVICES, MANHOLES ARE REQUIRED FOR TIE–IN TO MAIN

STANDARD SERVICE LATERAL

(MAIN DEPTH LESS THAN 8ft)

NOT TO SCALE

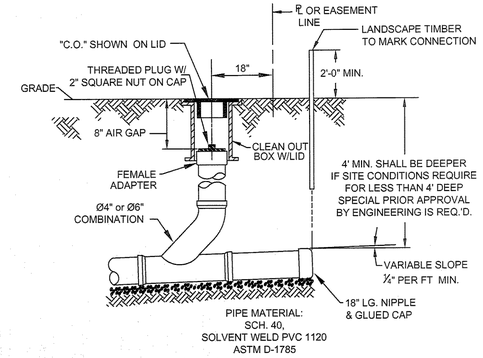

NOTE: FOR PRIVATE 8" SERVICES, MANHOLES ARE REQUIRED FOR TIE–IN TO MAIN

SERVICE CONNECTION & CLEAN-OUT

NOT TO SCALE

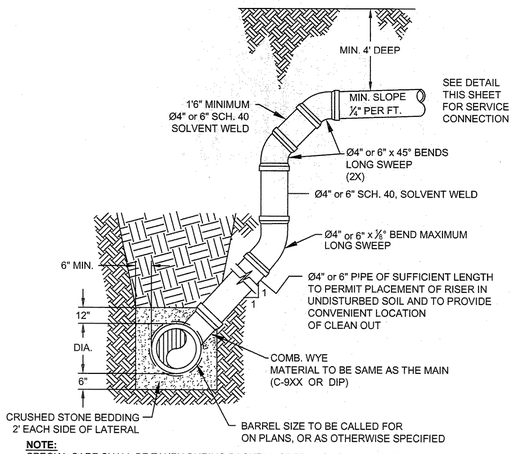

NOTE:
SPECIAL CARE SHALL BE TAKEN DURING BACKFILL OPERATIONS. THE RISER SHALL BE PLUMB AND TRUE AT ALL TIMES, AND REST ON FIRM, STABLE FOUNDATION.

FOR PRIVATE 8" SERVICES, MANHOLES ARE REQUIRED FOR TIE–IN TO MAIN

DEEP SERVICE LATERAL

(MAIN DEPTH GREATER THAN 8ft)

NOT TO SCALE

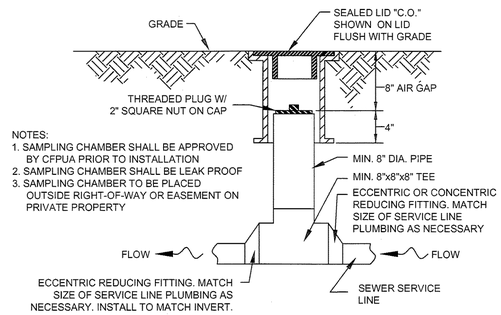

NOTES:
1. SAMPLING CHAMBER SHALL BE APPROVED BY CFPUA PRIOR TO INSTALLATION
2. SAMPLING CHAMBER SHALL BE LEAK PROOF
3. SAMPLING CHAMBER TO BE PLACED OUTSIDE RIGHT-OF-WAY OR EASEMENT ON PRIVATE PROPERTY

SAMPLING CHAMBER

NOT TO SCALE

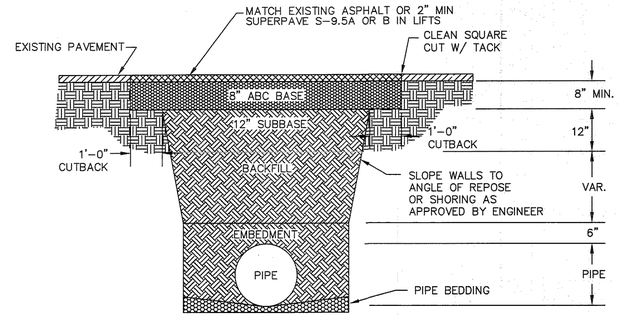

NOTES:
1. BACKFILL SHALL BE SUITABLE MATERIAL THAT IS FREE FROM HEAVY CLAY, GUMBOS, DEBRIS, ORGANICS AND LITTLE TO NO EXCESSIVE MOISTURE.
2. SELECT BACKFILL MAY BE SUBSTITUTED OR REQUIRED BY CITY TO ACHIEVE COMPACTION, (I.E. #57, ABC, CRUSHED LIMESTONE, CLEAN SAND, FLOWABLE FILL, ETC).
3. 8–INCH OF ABC BASE MATERIAL SHALL BE USED ON CITY STREETS.
4. BACKFILL AND BASE MATERIALS SHALL BE COMPACTED 12" MINIMUM LIFTS
5. SOIL SHALL BE COMPACTED BY A MECHANIZED TAMPER (I.E JUMPING JACK), HOWEVER, VIBRATORY ROLLERS > 18" WIDTH MAY BE USED FOR LARGER EXCAVATIONS. THE PLATE TAMP METHOD SHALL NOT BE USED.
6. ALL APPROVED CASTINGS SHALL BE SET FLUSH TO GRADE AND SUPPORTED IF APPLICABLE.
7. ABC BASE AND SUBBASE COMPACTED TO 98% AND BACKFILL AND EMBEDMENT COMPACTED TO 90% AS DETERMINED BY THE MODIFIED PROCTOR AASHTO METHOD T–99.
8. 1–FOOT CUTBACKS OF ASPHALT SHALL BE PREPARED ON UNDISTURBED SOIL. MINIMUM ASPHALT DENSITY IS 90%.

PAVEMENT REPAIR WHERE PIPE INSTALLED

(FOR PRIVATE ROADS AND PAVED AREAS;
CONTRACTOR TO MEET MIN. REQUIREMENTS AS DEFINED BY
RIGHT-OF-WAY OWNER FOR PUBLIC ROAD REPAIRS)

NOT TO SCALE

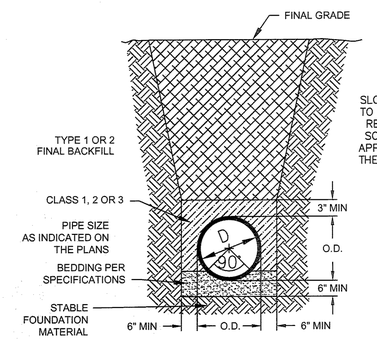

CL 50 DUCTILE IRON
DR 18 PVC
PIPE TRENCH DETAIL

NOT TO SCALE

NOTE:
PAVEMENT WIDTH AND LOCATION IN R/W VARIES. SEE PLAN FOR INDIVIDUAL LOCATION.

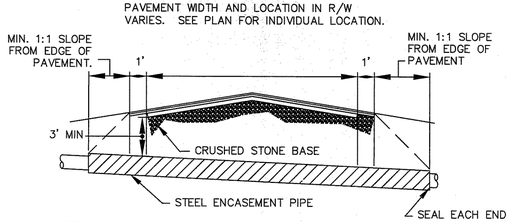

NOTES:
1. CASING WILL BE INSTALLED AT LINE AND GRADE SHOWN ON INDIVIDUAL PROFILE FOR EACH CROSSING. BORING/JACKING TO LINE AND GRADE IS REQUIRED.
2. TRACER WIRE SHALL BE CONTINUED THROUGH CASING

TYPICAL BORING/JACKING DETAIL

NOT TO SCALE

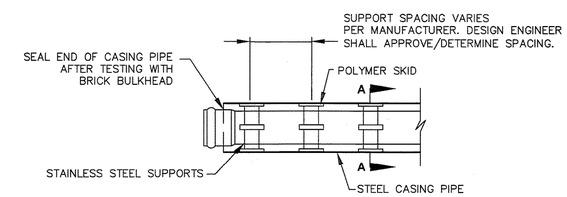

NOTE: PIPE SUPPORT TO BE PLACED TO PROVIDE PROPER SUPPORT, ALIGNMENT, AND GRADE AS SPECIFIED. CONTINUOUS SUPPORTS MAY BE USED AS ALTERNATIVE. OIL, GREASE, OR PETROLEUM PRODUCT MAY NOT BE USED AS LUBRICANT.

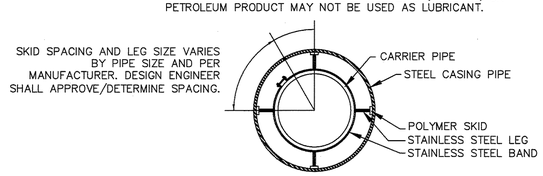

SECTION A-A

NOT TO SCALE

PIPE CASING SUPPORT DETAIL

NOT TO SCALE

GENERAL NOTES:

1. NO EXCAVATED MATERIAL SHALL BE PLACED IN ANY STREAM, DITCH OR DRAINAGE-WAY.
2. THE CONTRACTOR IS RESPONSIBLE FOR LOCATING ALL UNDERGROUND UTILITIES BEFORE ANY CONSTRUCTION BEGINS.
3. THE CONTRACTOR IS RESPONSIBLE FOR TEMPORARY SEDIMENT AND EROSION CONTROL MEASURES WHILE CONSTRUCTION IS IN PROGRESS.
4. THE CONTRACTOR IS RESPONSIBLE FOR STABILIZATION OF ALL DISTURBED AREAS.
5. THE CONTRACTOR IS RESPONSIBLE FOR LAY DOWN & STOCKPILE AREAS (TO ARRANGE AND INSURE COMPLIANCE WITH ALL LOCAL AND STATE REGULATIONS).

THE DETAILS SHOWN HEREON SUPERCEDE CFPUA WRITTEN TECHNICAL SPECIFICATIONS VERSIONS 1.00 - 1.04

NORTH CAROLINA CERTIFICATE OF AUTHORIZATION
THOMAS & HUTTON ENGINEERS
F-0871

REV:	DESCRIPTION:	DATE:
1	SAMPLING CHAMBER REVISED	10/26/12

NORTH CAROLINA PROFESSIONAL SEAL 032969 ENGINEER JOHN H. RICHARDS
29 MAR 13

CFPUA SANITARY SEWER

STANDARD DETAILS

CAPE FEAR PUBLIC UTILITY AUTHORITY
235 GOVERNMENT CENTER DRIVE
WILMINGTON, NC 28403
OFFICE: (910)332-6560
Stewardship. Sustainability. Service.

DATE:	1/9/12
SCALE:	N/A
DRAWN BY:	CFPUA
CHECKED BY:	CFPUA
PROJECT NO. :	
SHEET NO:	SSD-2

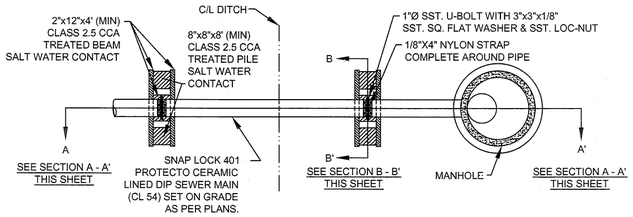

NOTES:

(1) PILES AND PILE DRIVING SHALL CONFORM TO NCDOT STANDARD SPECIFICATIONS FOR ROADS AND STRUCTURES, JANUARY 2002, SECTIONS 445, 450, 1082-2 & 1084-2

(2) CENTERLINE OF BOLTS TO BE A MINIMUM OF 3" FROM OUTSIDE EDGE OF TIMBER. BOLTS TO BE A MINIMUM OF 3" CENTERLINE TO CENTERLINE

(3) ALL STAINLESS STEEL SHALL BE 316. STAINLESS STRAP TO BE COLD FORMED.

(4) PILE SHALL NOT OBSTRUCT FLOW OR CAUSE EROSION OF DITCH/STREAM BANK.

(5) MIN. CLASS 54 DIP-ENGINEER MUST DESIGN LOADING.

(6) DESIGN SHALL BE APPROVED BY CFPUA

PILE AND BENT

NOT TO SCALE

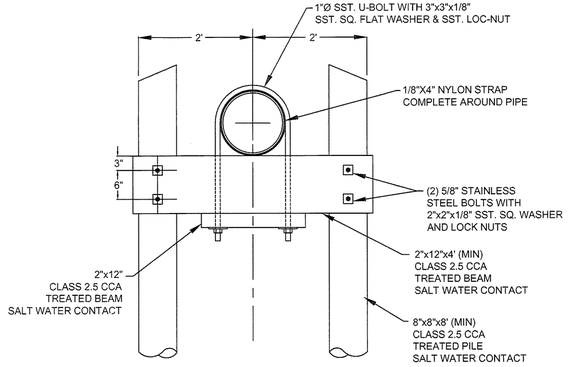

PILE AND BENT SECTION B - B'

NOT TO SCALE

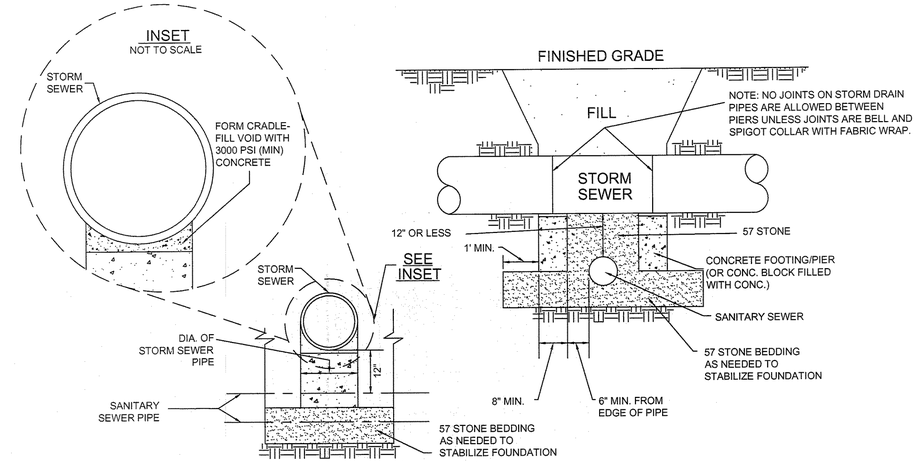

STRUCTURAL BRIDGING DETAIL FOR STORMWATER OVER GRAVITY SEWER INSTALLATIONS WITH LESS THAN 12" SEPARATION

NOT TO SCALE

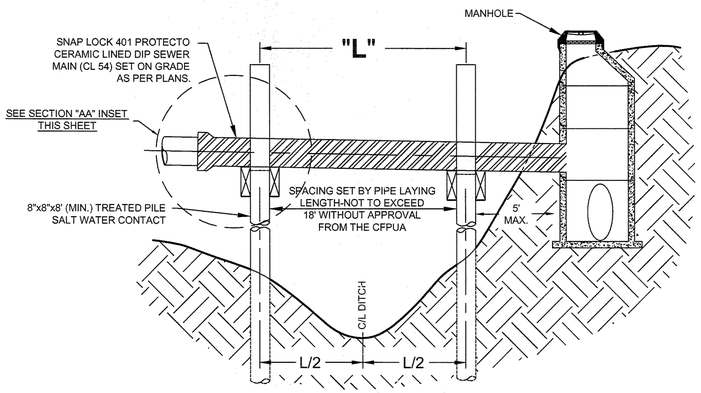

PILE AND BENT SECTION A - A'

NOT TO SCALE

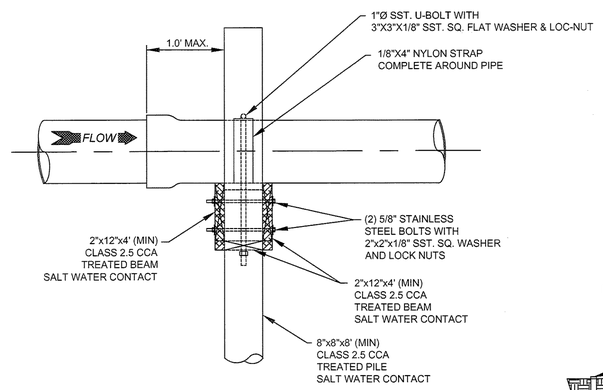

PILE AND BENT SECTION A - A' INSET

NOT TO SCALE

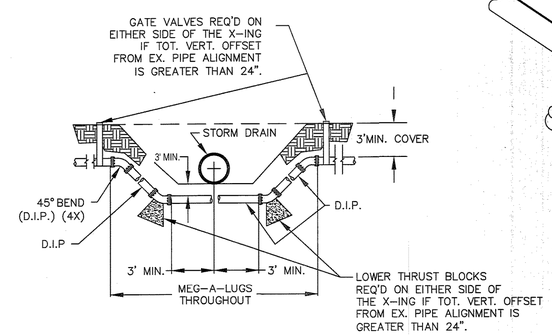

NOTE: USE D.I.P. (CL50 OR BETTER)

FORCE MAIN DITCH & STORM DRAIN CROSSING

NOT TO SCALE

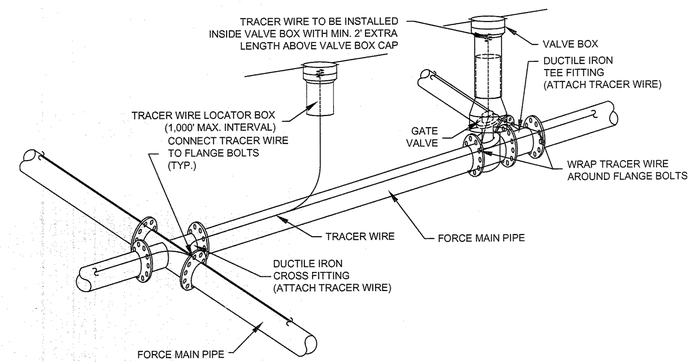

NOTES:
1. TRACER WIRE SHALL BE #10 COPPER SOLID CORE COPPER WIRE WITH GAS AND OIL RESISTANT INSULATION
2. WIRE SHALL BE STRAPPED TO ALL PVC FORCE MAIN PIPING WITH DUCT TAPE AT 12-FT. INTERVALS.
3. SECURE WIRE TO ALL TEE AND CROSS FITTINGS.
4. ALL WIRE SPLICES SHALL HAVE WATER PROOF WIRE CONNECTIONS.

TRACER WIRE DETAIL

NOT TO SCALE

GENERAL NOTES:

1. NO EXCAVATED MATERIAL SHALL BE PLACED IN ANY STREAM, DITCH OR DRAINAGE-WAY.
2. THE CONTRACTOR IS RESPONSIBLE FOR LOCATING ALL UNDERGROUND UTILITIES BEFORE ANY CONSTRUCTION BEGINS.
3. THE CONTRACTOR IS RESPONSIBLE FOR TEMPORARY SEDIMENT AND EROSION CONTROL MEASURES WHILE CONSTRUCTION IS IN PROGRESS.
4. THE CONTRACTOR IS RESPONSIBLE FOR STABILIZATION OF ALL DISTURBED AREAS.
5. THE CONTRACTOR IS RESPONSIBLE FOR LAY DOWN & STOCKPILE AREAS (TO ARRANGE AND INSURE COMPLIANCE WITH ALL LOCAL AND STATE REGULATIONS).

THE DETAILS SHOWN HEREON SUPERCEDE CFPUA WRITTEN TECHNICAL SPECIFICATIONS VERSIONS 1.00 - 1.04

NORTH CAROLINA THOMAS & HUTTON ENGINEERS F-0371 CERTIFICATE OF AUTHORIZATION

REV:	DESCRIPTION:	DATE:

CFPUA SANITARY SEWER

STANDARD DETAILS

NORTH CAROLINA PROFESSIONAL SEAL 025930 ENGINEER JOHN H. RICHARDS 20 MAR 13

CAPE FEAR PUBLIC UTILITY AUTHORITY
235 GOVERNMENT CENTER DRIVE
WILMINGTON, NC 28403
OFFICE: (910)332-6560
Stewardship. Sustainability. Service.

DATE:	1/9/12
SCALE:	N/A
DRAWN BY:	CFPUA
CHECKED BY:	CFPUA
PROJECT NO. :	
SHEET NO:	SSD-3

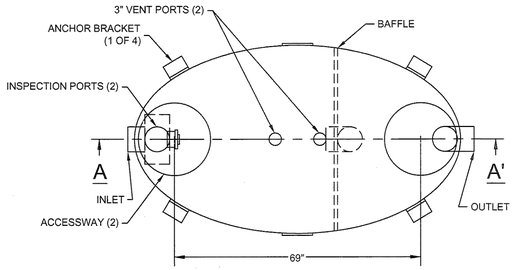

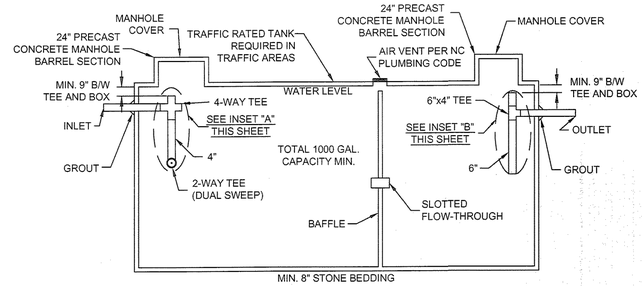

CONCRETE GREASE INTERCEPTOR

NOT TO SCALE

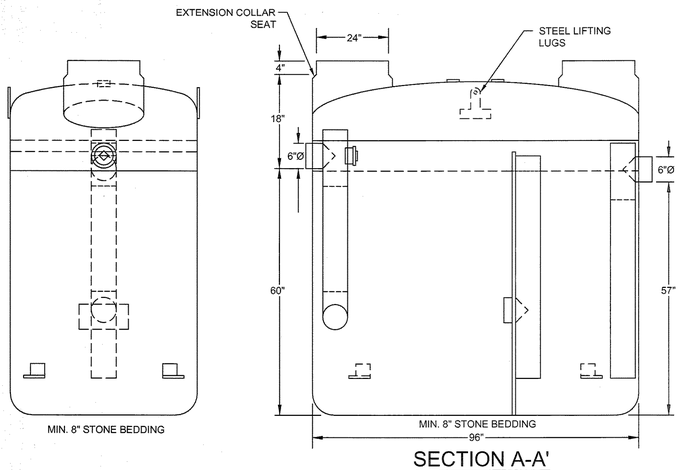

SECTION A-A'

NOTES:
1. FOR GRAVITY APPLICATIONS ONLY
2. MIN. THICKNESS: 1/4" WALL AND 3/8" TOP AND BOTTOM BOWLS
3. STANDARD PIPE STUBS ARE SOCKET SDR 35 PVC
4. EXTENSION COLLARS SHALL BE CAULKED WITH SIKAFLEX OR EQUIVALENT FOR WATERTIGHT SEAL
5. FOLLOW MANUFACTURE'S SPECS FOR TRAFFIC OR PEDESTRIAN LOADING

FIBERGLASS GREASE INTERCEPTOR

NOT TO SCALE

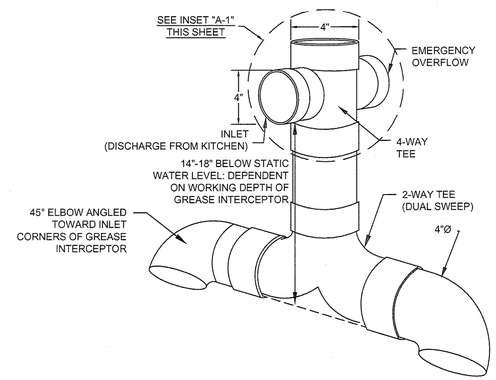

GREASE INTERCEPTOR INSET "A" 4" SANITARY TEE

NOT TO SCALE

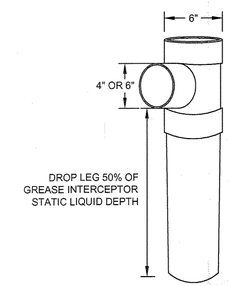

GREASE INTERCEPTOR INSET "B" 6" X 6" X 4" OUTLET SANITARY TEE

NOT TO SCALE

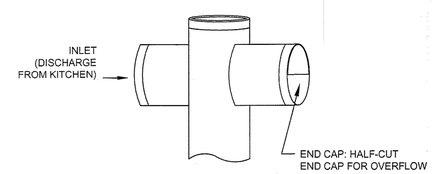

GREASE INTERCEPTOR INSET "A-1" EMERGENCY OVERFLOW CLOSE-UP

NOT TO SCALE

GENERAL NOTES:

1. NO EXCAVATED MATERIAL SHALL BE PLACED IN ANY STREAM, DITCH OR DRAINAGE-WAY.
2. THE CONTRACTOR IS RESPONSIBLE FOR LOCATING ALL UNDERGROUND UTILITIES BEFORE ANY CONSTRUCTION BEGINS.
3. THE CONTRACTOR IS RESPONSIBLE FOR TEMPORARY SEDIMENT AND EROSION CONTROL MEASURES WHILE CONSTRUCTION IS IN PROGRESS.
4. THE CONTRACTOR IS RESPONSIBLE FOR STABILIZATION OF ALL DISTURBED AREAS.
5. THE CONTRACTOR IS RESPONSIBLE FOR LAY DOWN & STOCKPILE AREAS (TO ARRANGE AND INSURE COMPLIANCE WITH ALL LOCAL AND STATE REGULATIONS).

THE DETAILS SHOWN HEREON SUPERCEDE CFPUA WRITTEN TECHNICAL SPECIFICATIONS VERSIONS 1.00 - 1.04

NORTH CAROLINA THOMAS & HUTTON ENGINEERS F-0871 CERTIFICATE OF AUTHORIZATION

REV:	DESCRIPTION:	DATE:

CFPUA SANITARY SEWER

NORTH CAROLINA PROFESSIONAL SEAL 025939 ENGINEER JOHN H. RICHARDS 20 MAR 13

STANDARD DETAILS

CAPE FEAR PUBLIC UTILITY AUTHORITY
235 GOVERNMENT CENTER DRIVE
WILMINGTON, NC 28403
OFFICE: (910)332-6560
Stewardship. Sustainability. Service.

DATE: 1/9/12
SCALE: N/A
DRAWN BY: CFPUA
CHECKED BY: CFPUA
PROJECT NO. :

SHEET NO: SSD-4

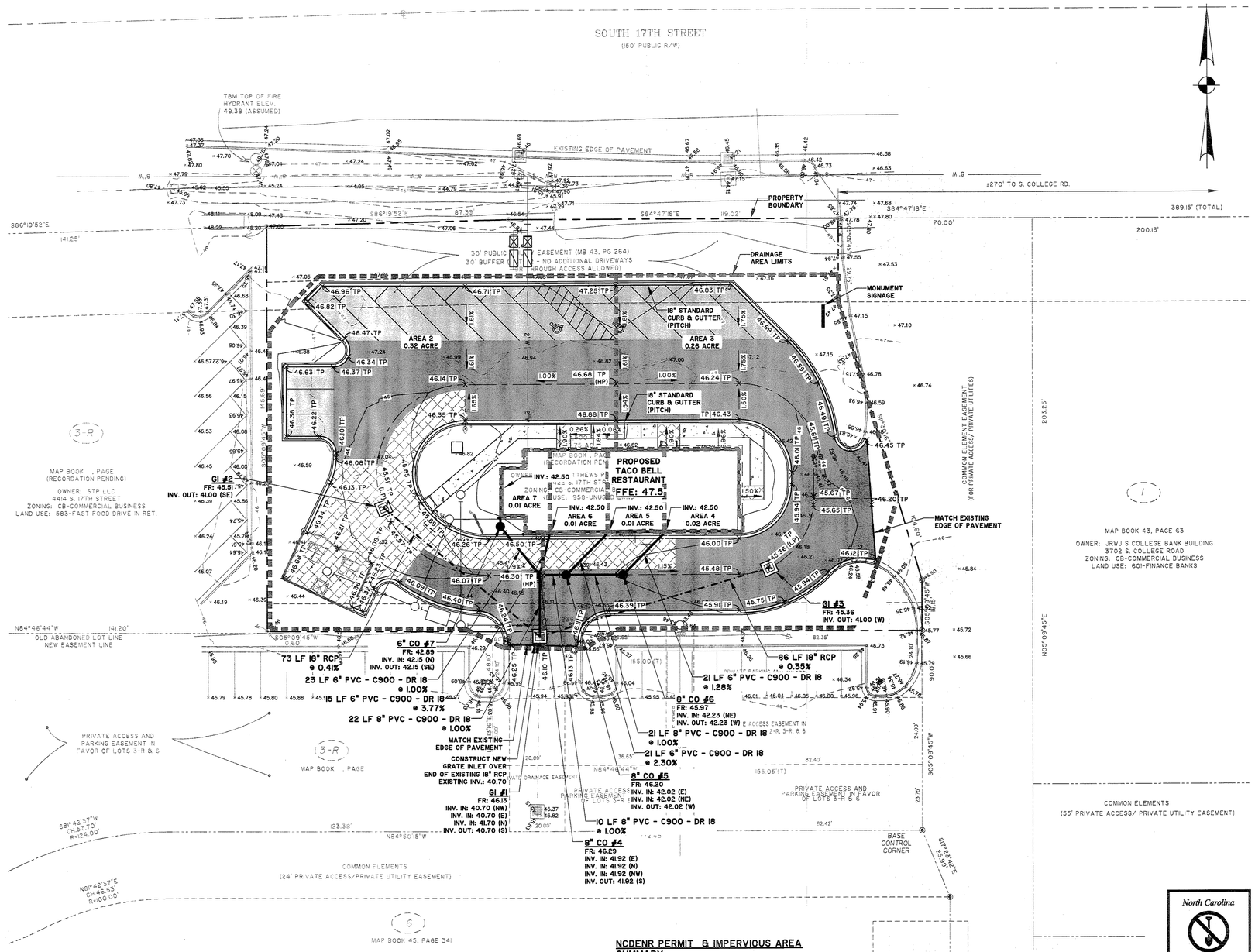

CITY OF WILMINGTON STANDARD NOTES:

1. PRIOR TO ANY CLEARING, GRADING, OR CONSTRUCTION ACTIVITY, TREE PROTECTION FENCING WILL BE INSTALLED AROUND PROTECTED TREES OR GROVES OF TREES AND NO CONSTRUCTION WORKERS, TOOLS, MATERIALS, OR VEHICLES ARE PERMITTED WITHIN THE TREE PROTECTION FENCING.
2. ALL PAVEMENT MARKINGS IN PUBLIC RIGHTS-OF-WAY AND FOR DRIVEWAYS ARE TO BE THERMOPLASTIC AND MEET CITY AND/OR NCDOT STANDARDS.
3. ONCE STREETS ARE OPEN TO TRAFFIC, CONTACT TRAFFIC ENGINEERING (RICHIE BROWN) TO REQUEST INSTALLATION OF TRAFFIC AND STREET NAME SIGNS. PROPOSED STREET NAMES MUST BE APPROVED PRIOR TO INSTALLATION OF STREET NAME SIGNS.
4. TRAFFIC CONTROL DEVICES (INCLUDING SIGNS AND PAVEMENT MARKINGS) IN AREAS OPEN TO PUBLIC TRAFFIC ARE TO MEET MUTCD (MANUAL ON UNIFORM TRAFFIC CONTROL DEVICES) STANDARDS.
5. CONTACT TOM PLATT WITH TRAFFIC ENGINEERING AT 341-7888 TO ENSURE THAT ALL TRAFFIC SIGNAL FACILITIES AND EQUIPMENT ARE SHOWN ON THE PLAN. ADD A NOTE TO CALL TRAFFIC ENGINEERING AT 341-7888 FORTY-EIGHT HOURS PRIOR TO ANY EXCAVATION IN THE RIGHT-OF-WAY.
6. ANY BROKEN OR MISSING SIDEWALK PANELS WILL BE REFLACED.
7. CONTACT KAREN DIXON AT 341-7888 TO DISCUSS STREET LIGHTING OPTIONS.
8. PROJECT SHALL COMPLY WITH CITY OF WILMINGTON CROSS CONNECTION CONTROL REQUIREMENTS. WATER METER(S) CANNOT BE RELEASED UNTIL ALL REQUIREMENTS ARE MET AND THE STATE HAS GIVEN THEIR FINAL APPROVAL. CALL 343-3910 FOR INFORMATION.
9. IF THE CONTRACTOR DESIRES CITY WATER FOR CONSTRUCTION, HE SHALL APPLY IN ADVANCE FOR THIS SERVICE AND MUST PROVIDE A REDUCED PRESSURE ZONE (RPZ) BACKFLOW PREVENTION DEVICE ON THE DEVELOPER'S SIDE OF THE WATER METER BOX.
10. ANY IRRIGATION SYSTEM SUPPLIED BY CITY WATER SHALL COMPLY WITH THE CITY'S CROSS CONECTION CONTROL REGULATIONS. CALL 343-3910 FOR INFORMATION.
11. ANY BACKFLOW PREVENTION DEVICES REQUIRED BY THE CITY WILL NEED TO BE ON THE LIST OF APPROVED DEVICES BY USCFCCCHR OR ASSE.

NCDENR PERMIT & IMPERVIOUS AREA SUMMARY:

PROPERTY BOUNDARY AREA: 32,500 SF

OFFSITE STORMWATER PERMIT #SW8 981023

COASTAL WETLANDS: 0 SF

PROPOSED IMPERVIOUS (BUA):

BUILDING:	2,465 SF
PARKING:	18,140 SF
SIDEWALK:	835 SF
TOTAL:	21,440 SF

PERCENT IMPERVIOUS: ±66%

North Carolina
One Call Center
Call Before You Dig
"It's The Law"
1-800-632-4949

GRAPHIC SCALE

20 0 10 20 40 80

(IN FEET)
1 inch = 20 ft.

THOMAS & HUTTON
Engineering | Surveying | Planning | GIS | Consulting
215 South Kerr Avenue • Unit B
Wilmington, NC 28403 • 910.332.3360
www.thomasandhutton.com
Savannah, GA | Brunswick, GA | Charleston, SC | Myrtle Beach, SC

NORTH CAROLINA PROFESSIONAL SEAL 24912 ENGINEER JOHN H. RICHARDS
02-12-13

NORTH CAROLINA THOMAS & HUTTON ENGINEERING CO. No. F-0871 CERTIFICATE OF AUTHORIZATION

CONTRACT DATE:	XX.XX.XX
BUILDING TYPE:	LARGE 50 Ni
PLAN VERSION:	AUGUST 2012
SITE NUMBER:	12-0276
STORE NUMBER:	XXXXX

TACO BELL

4422 SOUTH 17TH STREET
FULTON STATION, NC

TACO BELL

LARGE 50 Ni

SHEET TITLE:

PAVING, GRADING, AND DRAINAGE PLAN

JOB NO:	J-24078.0001
DATE:	02-12-2013
DRAWN BY:	KWL
DESIGNED:	KWL
REVIEWED:	JHR
APPROVED:	JHR
SCALE:	1" = 20'

SHEET NO:

C3.1

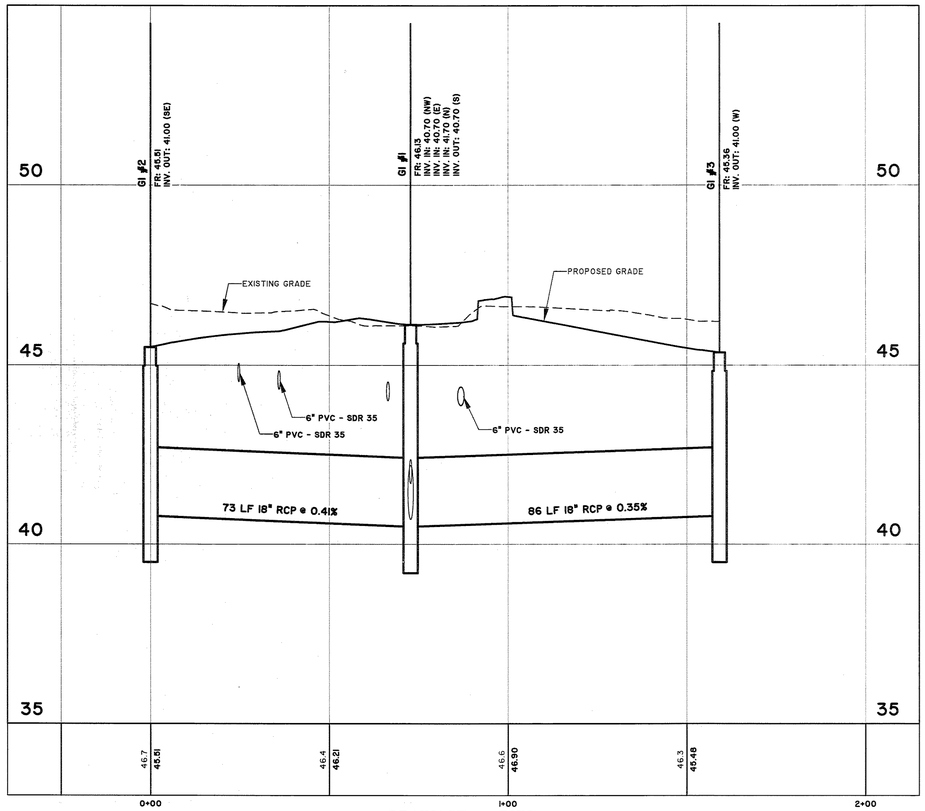

DRAINAGE – RUN1
STATIONS: -0+25 – 2+00
SCALE: HORZ.: 1" = 20'
VERT.: 1" = 2'

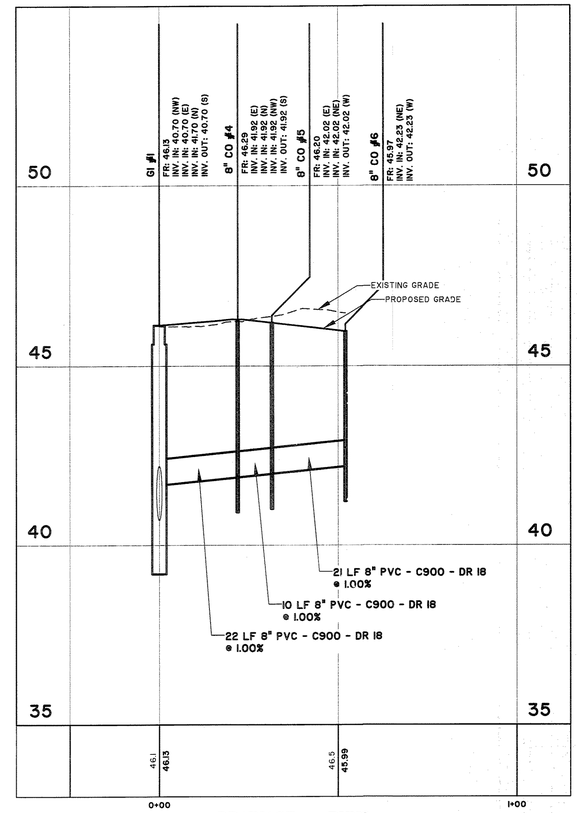

DRAINAGE – RUN3
STATIONS: -0+25 – 1+00
SCALE: HORZ.: 1" = 20'
VERT.: 1" = 2'

North Carolina
One Call Center
Call Before You Dig
"It's The Law"
1-800-632-4949

GRAPHIC SCALE

20 0 10 20 40 80

(IN FEET)
1 inch = 20 ft.

THOMAS & HUTTON
Engineering | Surveying | Planning | GIS | Consulting
215 South Kerr Avenue • Unit B
Wilmington, NC 28403 • 910.332.3360
www.thomasandhutton.com
Savannah, GA | Brunswick, GA | Charleston, SC | Myrtle Beach, SC

NORTH CAROLINA PROFESSIONAL SEAL 25832 ENGINEER JOHN H. RICHARDS
10 MAR 13

NORTH CAROLINA THOMAS & HUTTON ENGINEERING CO. No. F-0871 CERTIFICATE OF AUTHORIZATION

CONTRACT DATE:	XX.XX.XX
BUILDING TYPE:	LARGE 50 Ni
PLAN VERSION:	AUGUST 2012
SITE NUMBER:	12-0276
STORE NUMBER:	XXXXX

TACO BELL

4422 SOUTH 17TH STREET
FULTON STATION, NC

LARGE 50 Ni

SHEET TITLE:

DRAINAGE PROFILES

JOB NO:	J-24078.0001
DATE:	02-12-2013
DRAWN BY:	KWL
DESIGNED:	KWL
REVIEWED:	JHR
APPROVED:	JHR
SCALE:	1" = 20'

SHEET NO:

C3.2

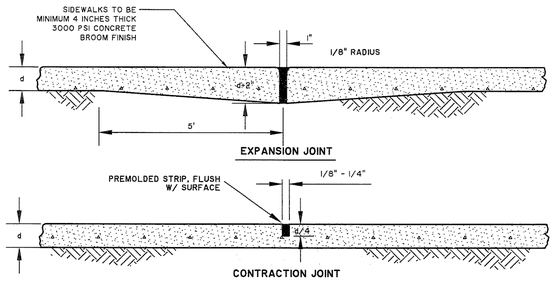

SIDEWALK JOINT DETAILS

NOT TO SCALE

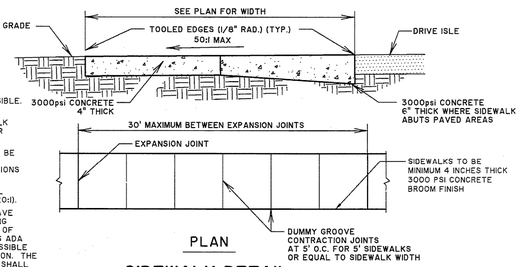

NOTES:
1. ALL SIDEWALK GRADES SHALL BE ADA ACCESSIBLE.
2. PROVIDE EXPANSION JOINTS WHERE SIDEWALK ABUTS STRUCTURES OR OTHER SIDEWALKS.
3. ALL SIDEWALKS SHALL BE BROOM FINISHED. SEE TECHNICAL SPECIFICATIONS FOR DETAILS.
4. MAXIMUM LONGITUDINAL SLOPE SHALL BE 5% (20:1).
5. CURB RAMPS SHALL HAVE A DETECTABLE WARNING COMPLYING WITH CODE OF FEDERAL REGULATIONS ADA STANDARDS FOR ACCESSIBLE DESIGN, CURRENT EDITION. THE DETECTABLE WARNING SHALL EXTEND FULL WIDTH AND DEPTH OF CURB RAMP.

SIDEWALK DETAIL

NOT TO SCALE

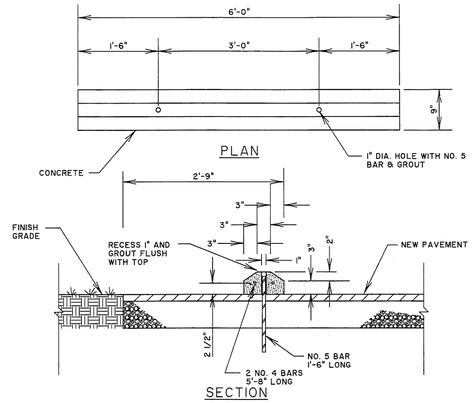

HEAVY DUTY WHEEL STOP DETAIL

NOT TO SCALE

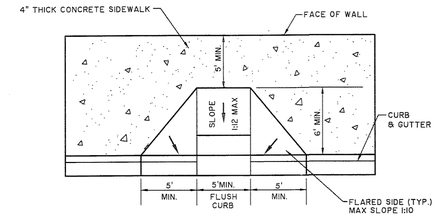

NOTES:
1. CONSTRUCTION OF ACCESSIBLE CURB RAMP SHALL CONFORM TO ALL APPLICABLE FEDERAL, STATE AND LOCAL CODES AND ORDINANCES.
2. TRANSITIONS FROM RAMPS TO WALKS, GUTTERS, OR STREETS SHALL BE FLUSH AND FREE OF ABRUPT CHANGES. MAXIMUM SLOPES OF ADJOINING GUTTERS, ROAD SURFACE IMMEDIATELY ADJACENT TO THE CURB RAMP, OR ACCESSIBLE ROUTE SHALL NOT EXCEED 1:20 (5%)
3. CURB RAMP SHALL HAVE A DETECTABLE WARNING THAT EXTENDS THE FULL WIDTH OF CURB RAMP. SEE DETECTABLE WARNING DETAIL.

CURB RAMP "TYPE A"

NOT TO SCALE

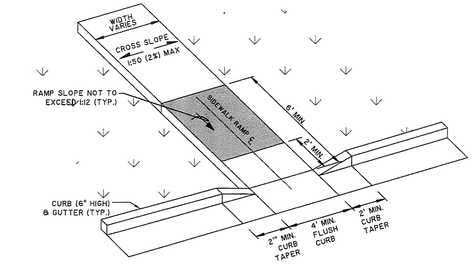

NOTES:
1. CONSTRUCTION OF ACCESSIBLE CURB RAMP SHALL CONFORM TO ALL APPLICABLE FEDERAL, STATE AND LOCAL CODES AND ORDINANCES.
2. TRANSITIONS FROM RAMPS TO WALKS, GUTTERS, OR STREETS SHALL BE FLUSH AND FREE OF ABRUPT CHANGES. MAXIMUM SLOPES OF ADJOINING GUTTERS, ROAD SURFACE IMMEDIATELY ADJACENT TO THE CURB RAMP, OR ACCESSIBLE ROUTE SHALL NOT EXCEED 1:20 (5%)
3. CURB RAMP SHALL HAVE A DETECTABLE WARNING THAT EXTENDS THE FULL WIDTH OF CURB RAMP. SEE DETECTABLE WARNING DETAIL.
4. LONGITUDINAL SLOPE OF SIDEWALK TO BE NO GREATER THAN 1:20 (5%).

CURB RAMP "TYPE B" W/ PERPENDICULAR SIDEWALK

NOT TO SCALE

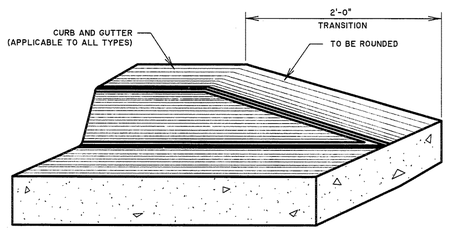

NOTES:
1. REQUIRED AT ALL SIDEWALK RAMPS AND WHERE INDICATED ON PLANS.

CURB AND GUTTER TAPER DETAIL

NOT TO SCALE

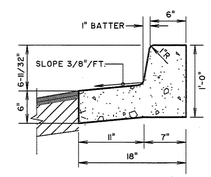

PITCH CURB

NOTES:
1. ALL CONCRETE SHALL BE 3,000 PSI.
2. PROVIDE CONTROL JOINTS EVERY TEN FEET (10').
3. PROVIDE EXPANSION JOINTS EVERY FIFTY FEET (50).
4. PROVIDE EXPANSION JOINT WHERE CURB ABUTS SIDEWALKS, OR OTHER STRUCTURES.
5. PROVIDE LIGHT BROOM FINISH.

18" STANDARD CURB & GUTTER

NOT TO SCALE

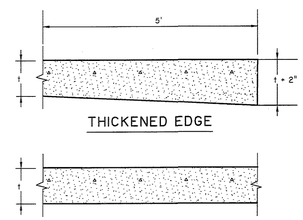

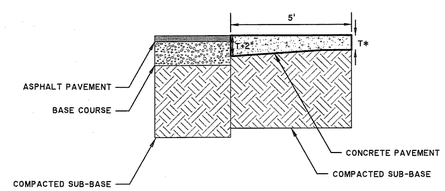

CONCRETE-ASPHALT TRANSITION DETAIL

NOTE:
REFER TO PAVEMENT SECTION DETAIL FOR THICKNESS (T*) OF CONCRETE PAVEMENT

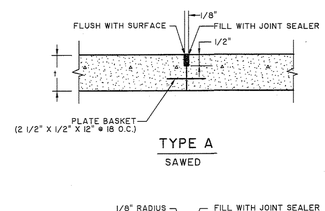

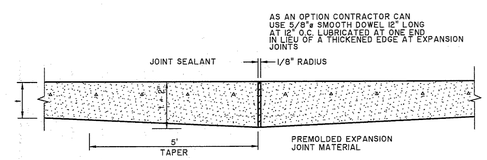

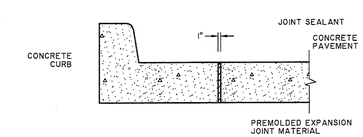

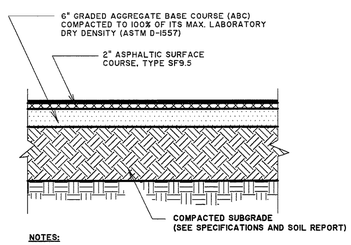

NOTES:
1. PAVEMENT AND AGGREGATE BASE COURSES SHALL BE CONSTRUCTED IN ACCORDANCE WITH THE NORTH CAROLINA DEPARTMENT OF TRANSPORTATION STANDARD STANDARD SPECIFICATIONS FOR ROADS AND STRUCTURES, CURRENT EDITION.
2. THE SUBGRADE SHALL BE COMPACTED TO 98% STANDARD PROCTOR (ASTM D-698) AND SHALL BE PREPARED ACCORDING TO THE NCDOT STANDARD SPECIFICATIONS. SUBGRADE SHALL BE FREE OF ROCKS AND DEBRIS LARGER THAN 2" IN DIAMETER. COMPACTION TESTS MUST BE SUBMITTED TO THE ENGINEER PRIOR TO APPLICATION OF ANY BASE MATERIAL.
3. CORE, DENSITY AND GRADATIONS ARE REQUIRED AND SHALL MEET NCDOT SPECIFICATIONS
4. SUBGRADE AND THE CURBLINE MUST PASS PROOF ROLL BEFORE THE CURB IS INSTALLED (IF ANY CURB IS SHOWN).

ASPHALT PAVING SECTION LIGHT DUTY

NOT TO SCALE

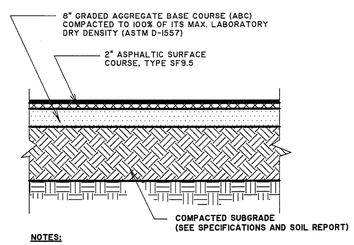

NOTES:
1. PAVEMENT AND AGGREGATE BASE COURSES SHALL BE CONSTRUCTED IN ACCORDANCE WITH THE NORTH CAROLINA DEPARTMENT OF TRANSPORTATION STANDARD STANDARD SPECIFICATIONS FOR ROADS AND STRUCTURES, CURRENT EDITION.
2. THE SUBGRADE SHALL BE COMPACTED TO 98% STANDARD PROCTOR (ASTM D-698) AND SHALL BE PREPARED ACCORDING TO THE NCDOT STANDARD SPECIFICATIONS. SUBGRADE SHALL BE FREE OF ROCKS AND DEBRIS LARGER THAN 2" IN DIAMETER. COMPACTION TESTS MUST BE SUBMITTED TO THE ENGINEER PRIOR TO APPLICATION OF ANY BASE MATERIAL.
3. CORE, DENSITY AND GRADATIONS ARE REQUIRED AND SHALL MEET NCDOT SPECIFICATIONS
4. SUBGRADE AND THE CURBLINE MUST PASS PROOF ROLL BEFORE THE CURB IS INSTALLED (IF ANY CURB IS SHOWN).

ASPHALT PAVING SECTION HEAVY DUTY

NOT TO SCALE

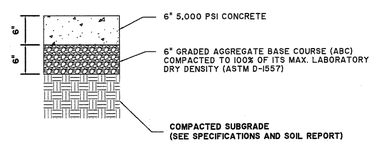

CONCRETE PAVEMENT

NOT TO SCALE

North Carolina
One Call Center
Call Before You Dig
"It's The Law"
1-800-632-4949

THOMAS & HUTTON
Engineering | Surveying | Planning | GIS | Consulting
215 South Kerr Avenue • Unit B
Wilmington, NC 28403 • 910.332.3360
www.thomasandhutton.com
Savannah, GA | Brunswick, GA | Charleston, SC | Myrtle Beach, SC

NORTH CAROLINA PROFESSIONAL SEAL 29429 ENGINEER JOHN H. RICHARDS 20 MAR 13

NORTH CAROLINA THOMAS & HUTTON ENGINEERING CO. No. F-0871 CERTIFICATE OF AUTHORIZATION

CONTRACT DATE:	XX.XX.XX
BUILDING TYPE:	LARGE 50 Ni
PLAN VERSION:	AUGUST 2012
SITE NUMBER:	12-0276
STORE NUMBER:	XXXXX

TACO BELL
4422 SOUTH 17TH STREET
FULTON STATION, NC

LARGE 50 Ni

SHEET TITLE:
PAVING, GRADING, AND DRAINAGE DETAILS

JOB NO:	J-24078.0001
DATE:	02-12-2013
DRAWN BY:	KWL
DESIGNED:	KWL
REVIEWED:	JHR
APPROVED:	JHR
SCALE:	1" = 1'

SHEET NO:
C4.1

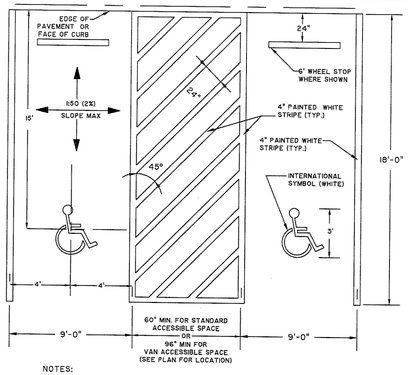

NOTES:

1. STRIPING AND CONSTRUCTION SHALL CONFORM TO ALL APPLICABLE FEDERAL, STATE AND LOCAL CODES AND SPECIFICATIONS.
2. 2% MAXIMUM SLOPE IN ALL DIRECTIONS WITHIN ACCESSIBLE PARKING SPACE AND ACCESS AISLE.
3. ONE IN EVERY 8 ACCESSIBLE SPACES SHALL BE SERVED BY AN 8" WIDE ACCESS AISLE AND SHALL BE DESIGNATED "VAN ACCESSIBLE".

ACCESSIBLE PARKING SPACE STRIPING DETAIL

NOT TO SCALE

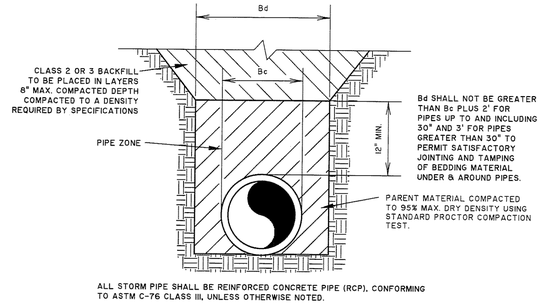

ALL STORM PIPE SHALL BE REINFORCED CONCRETE PIPE (RCP), CONFORMING TO ASTM C-76 CLASS III, UNLESS OTHERWISE NOTED.

STORM LINE BEDDING DETAIL

NOT TO SCALE

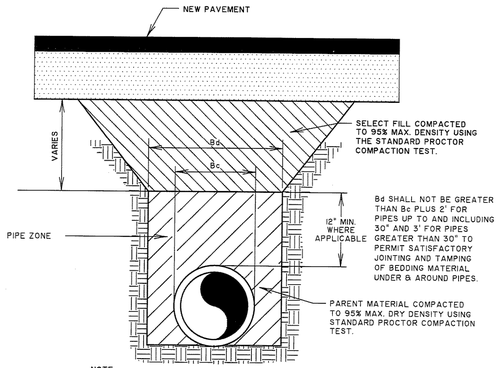

NOTE:
ALL JOINTS SHALL BE WRAPPED WITH FILTER FABRIC

STORM LINE BEDDING DETAIL FOR PAVED AREAS

NOT TO SCALE

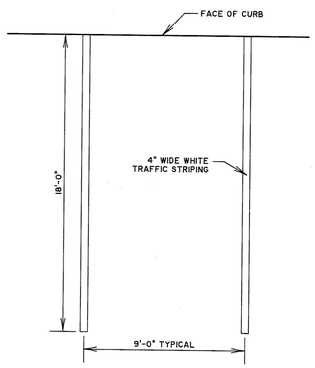

TYPICAL PARKING SPACE

NOT TO SCALE

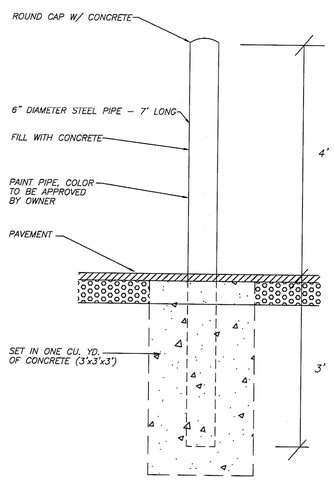

BOLLARD DETAIL

NOT TO SCALE

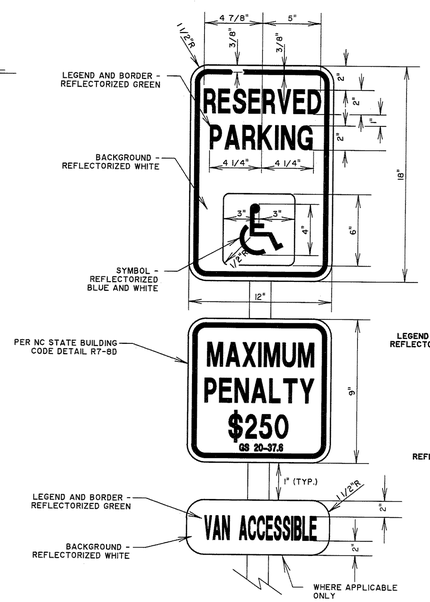

HANDICAPPED PARKING SIGN

NOT TO SCALE

STOP BAR

NOT TO SCALE

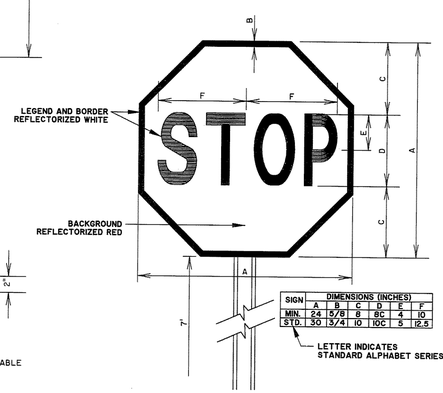

SIGN	DIMENSIONS (INCHES)						
	A	B	C	D	E	F	
MIN.	24	5/8	8	8C	4	10	
STD.	30	3/4	10	10C	5	12.5	

STOP SIGN DETAIL

NOT TO SCALE

STATE OF NORTH CAROLINA
DEPT. OF TRANSPORTATION
DIVISION OF HIGHWAYS
RALEIGH, N.C.

1-12

ENGLISH STANDARD DRAWING FOR
CONCRETE DROP INLET
12" THRU 30" PIPE

SHEET 1 OF 1
840.14

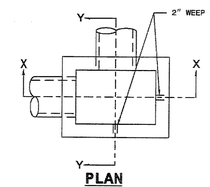

PLAN
WITH GRATE & FRAME REMOVED

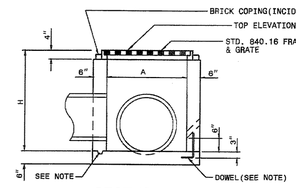

SECTION X-X

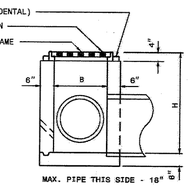

SECTION Y-Y

DOWEL

GENERAL NOTES:
USE CLASS "B" CONCRETE THROUGHOUT.
PROVIDE ALL DROP INLETS OVER 3'-6" IN DEPTH WITH STEPS 12" ON CENTER. USE STEPS WHICH COMPLY WITH STD. DRAWING 840.66.
OPTIONAL CONSTRUCTION - MONOLITHIC POUR. 2" KEYWAY OR #4 BAR DOWELS AT 12" CENTERS AS DIRECTED BY THE ENGINEER.
USE FORMS FOR THE CONSTRUCTION OF THE BOTTOM SLAB.
IF REINFORCED CONCRETE PIPE IS SET IN BOTTOM SLAB OF BOX, ADD TO SLAB AS SHOWN ON STD. NO. 840.00.
CONSTRUCT WITH PIPE CROWNS MATCHING.
SEE STANDARD DRAWING 840.25 FOR ATTACHMENT OF FRAMES AND GRATES NOT SHOWN.
INSTALL 2" WEEPHOLES AS DIRECTED BY THE ENGINEER.
INSTALL STONE DRAINS, OF A MINIMUM OF 1 CUBIC FOOT OF NO. 78M STONE IN A POROUS FABRIC BAG OR WRAP, AT EACH WEEP HOLE OR AS DIRECTED BY THE ENGINEER.
CHAMFER ALL EXPOSED CORNERS 1".
DRAWING NOT TO SCALE.

DIMENSIONS AND QUANTITIES FOR DROP INLET(BASED ON MIN. HEIGHT, H)

DIMENSIONS OF BOX & PIPE				CUBIC YARDS CONC. IN BOX			DEDUCTIONS FOR ONE PIPE	
PIPE	SPAN	WIDTH	MIN. HEIGHT	BOTTOM SLAB	WALL PER FT. HT.	TOTAL CONCRETE FOR BOX(MIN HEIGHT)	C.M.	R.C.
D	A	B	H					
12"	3'-0"	2'-0"	2'-0"	0.222	0.222	0.592	0.015	0.026
15"	/	/	2'-3"		/	0.648	0.023	0.036
18"	/	/	2'-8"		/	0.703	0.033	0.049
24"	/	/	3'-0"	/	/	0.814	0.059	0.085
30"	3'-0"	2'-0"	3'-6"	0.222	0.222	0.925	0.092	0.127

STATE OF NORTH CAROLINA
DEPT. OF TRANSPORTATION
DIVISION OF HIGHWAYS
RALEIGH, N.C.

1-12

ENGLISH STANDARD DRAWING FOR
CONCRETE DROP INLET
12" THRU 30" PIPE

SHEET 1 OF 1
840.14

STATE OF NORTH CAROLINA
DEPT. OF TRANSPORTATION
DIVISION OF HIGHWAYS
RALEIGH, N.C.

1-12

ENGLISH STANDARD DRAWING FOR
DROP INLET FRAME AND GRATES
FOR USE WITH STD. DWG.S 840.14 AND 840.15

SHEET 1 OF 1
840.16

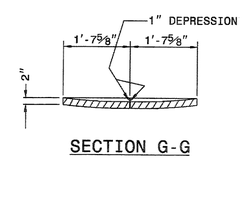

SECTION G-G

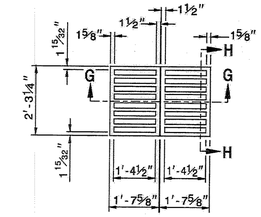

PLAN OF GRATING
CAST IRON

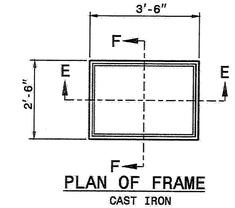

PLAN OF FRAME
CAST IRON

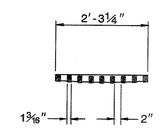

SECTION H-H

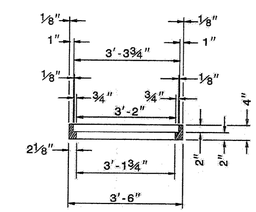

SECTION E-E

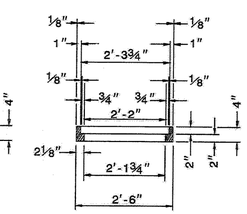

SECTION F-F

STATE OF NORTH CAROLINA
DEPT. OF TRANSPORTATION
DIVISION OF HIGHWAYS
RALEIGH, N.C.

1-12

ENGLISH STANDARD DRAWING FOR
DROP INLET FRAME AND GRATES
FOR USE WITH STD. DWG.S 840.14 AND 840.15

SHEET 1 OF 1
840.16

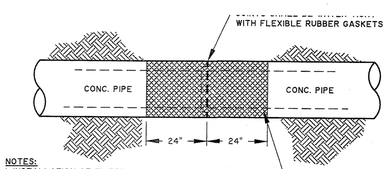

NOTES:
1. INSTALLATION OF FILTER FABRIC AT JOINT- AFTER EACH SECTION IS JOINED UP, THE CONTRACTOR SHALL PLACE TWO (2) LAYERS OF FILTER FABRIC AROUND THE JOINT, A MINIMUM OF FOUR FEET WIDE, CENTERED ON THE JOINT.
2. FILTER FABRIC SHALL BE A NON-WOVEN HEAT-BONDED FIBER OF POLYPROPYLENE AND NYLON FILAMENTS EQUIVALENT TO MIRAFI 140 N.

CONCRETE PIPE JOINT DETAIL

NOT TO SCALE

North Carolina
One Call Center
Call Before You Dig
"It's The Law"
1-800-632-4949

THOMAS & HUTTON
Engineering | Surveying | Planning | GIS | Consulting
215 South Kerr Avenue • Unit B
Wilmington, NC 28403 • 910.332.3360
www.thomasandhutton.com
Savannah, GA | Brunswick, GA | Charleston, SC | Myrtle Beach, SC

NORTH CAROLINA PROFESSIONAL SEAL 29595 ENGINEER JOHN H. RICHARDS
20 MAR 13

NORTH CAROLINA THOMAS & HUTTON ENGINEERING CO. No. F-0871 CERTIFICATE OF AUTHORIZATION

CONTRACT DATE:	XX.XX.XX
BUILDING TYPE:	LARGE 50 Ni
PLAN VERSION:	AUGUST 2012
SITE NUMBER:	12-0276
STORE NUMBER:	XXXXX

TACO BELL

4422 SOUTH 17TH STREET
FULTON STATION, NC

LARGE 50 Ni

SHEET TITLE:
PAVING, GRADING, AND DRAINAGE DETAILS

JOB NO: J-24078.0001
DATE: 02-12-2013
DRAWN BY: KWL
DESIGNED: KWL
REVIEWED: JHR
APPROVED: JHR
SCALE: 1" = 1'

SHEET NO:
C4.2

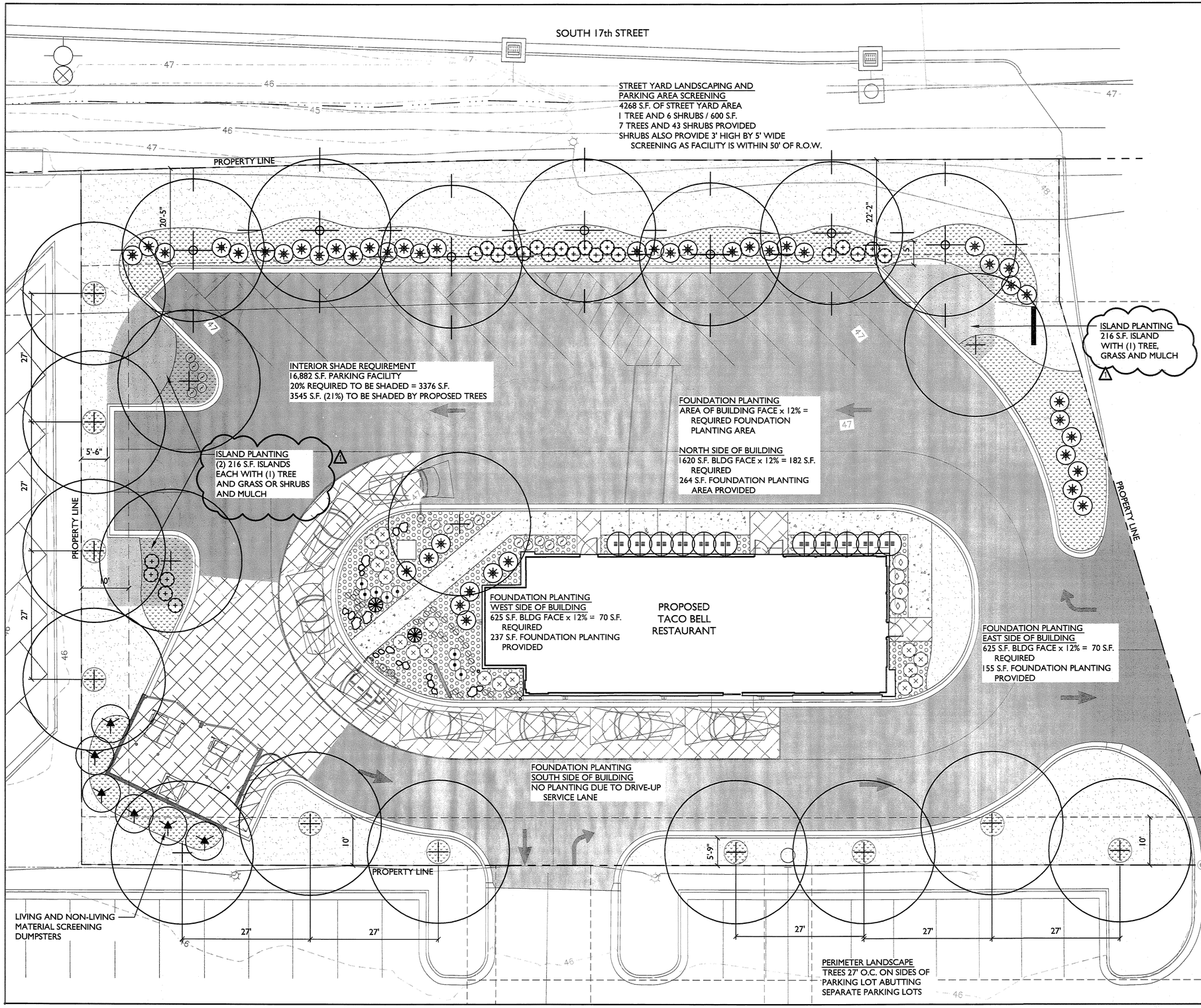

PLANTING LEGEND

TREES

Red Maple
Acer rubrum
2"-2½" min. cal.
Qty: 15

Tulip Tree
Liriodendron tulipifera
2"-2½" min. cal.
Qty: 7

SHRUBS

Japanese Fatsia
Fatsia japonica
3 gal 24" Ht. x 24" Sp. Qty: 11

Carissa Holly
Ilex cornuta 'Carissa'
3 gal 15" Ht. x 15" Sp. Qty: 8

Wax Myrtle
Myrica cerifera
25 gal 5'-6' Ht. Qty: 6

Harbor Dwarf Nandina
Nandina domestica 'Harbor Dwarf'
3 gal 12" Ht. x 12" Sp. Qty: 15

Nandina
Nandina domestica
3 gal 15" Ht. x 15" Sp. Qty: 4

Pittosporum
Pittosporum tobira
7 gal 36" Ht. x 24" Sp. Qty: 45

Majestic Beauty India Hawthorn
Raphiolepis umbellata 'Majestic Beauty'
7 gal 36" Ht. x 24" Sp. Qty: 23

Dwarf White India Hawthorn
Raphiolepis indica 'White'
3 gal 12" Ht. x 12" Sp. Qty: 17

Dwarf Golden Arborvitae
Thuja occidentalis 'Rheingold'
5 gal 24" Ht. x 24" Sp. Qty: 30

Spanish Bayonet
Yucca aloifolia
5 gal Qty: 2

GROUNDCOVERS AND MULCHES

Brick Chip Mulch
3" deep Qty: 13 cu.yd.

Dark Hardwood Mulch
3" deep Qty: 27 cu.yd.

Bermuda Grass
Sod Qty: ±6,755 sf

Limestone Boulders Qty: ±19 boulders

THOMAS & HUTTON
Engineering | Surveying | Planning | GIS | Consulting
215 South Kerr Avenue • Unit B
Wilmington, NC 28403 • 910.332.3360
www.thomasandhutton.com
Savannah, GA | Brunswick, GA | Charleston, SC | Myrtle Beach, SC

SageDesign
SageDesign PLLC
Sara Burroughs, RLA
228 North Front Street
Suite 202D
Wilmington, NC 28401
Ph. (910)232-3878
sara@sagedesign.us

1 03-14-2013	PLAN REVIEW COMMENTS
2	
3	
4	
5	
6	
7	
8	
9	
10	

CONTRACT DATE:	XX.XX.XX
BUILDING TYPE:	TB07-BRB
PLAN VERSION:	XXX 20XX
SITE NUMBER:	XXXXXX
STORE NUMBER:	XXXXX

TACO BELL
4422 SOUTH 17TH STREET
FULTON STATION, NC

TB07-BRB

SHEET TITLE:

PLANTING PLAN

JOB NO:	J-####
DATE:	2/11/13
DRAWN BY:	####
DESIGNED:	####
REVIEWED:	####
APPROVED:	####
SCALE:	1"=10'-0"

SHEET NO: L1.01

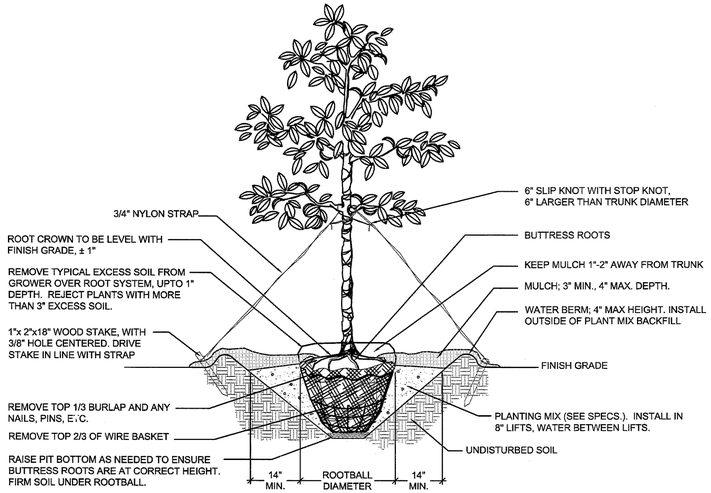

A SINGLE STEM TREE INSTALLATION DETAIL

SCALE: NTS

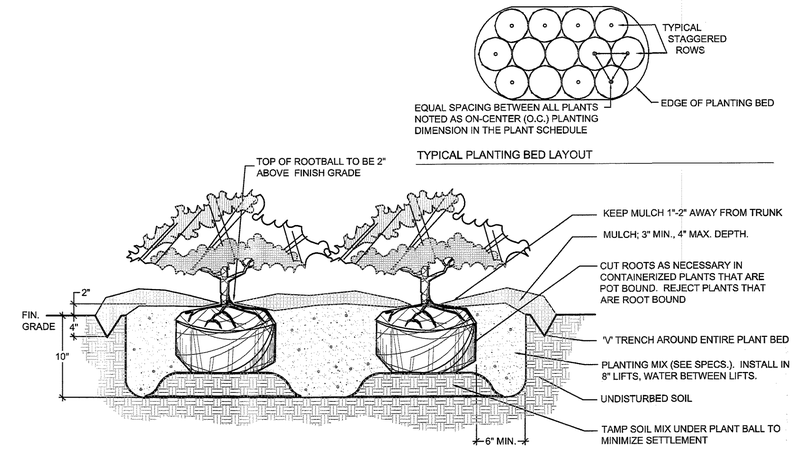

B SHRUB INSTALLATION DETAIL

SCALE: NTS

PLANT MATERIAL NOTES

1. ALL PLANT MATERIAL SHALL CONFORM TO THE MOST CURRENT STANDARDS ESTABLISHED BY "THE AMERICAN ASSOCIATION OF NURSERYMAN".
2. CONTAINERIZED PLANTS SHALL HAVE A ROOT SYSTEM SUFFICIENT ENOUGH IN DEVELOPMENT TO HOLD THE SOIL INTACT WHEN REMOVED FROM THE CONTAINER. THE ROOT SYSTEM SHALL NOT BE ROOT BOUND, A CONDITION WHERE THE ROOT SYSTEM IS DENSE IN MASS, EXCESSIVELY INTERTWINED, AND HAS ESTABLISHED A CIRCULAR GROWTH PATTERN.
3. ALL PLANTS SHALL BE FRESHLY DUG, SOUND, HEALTHY, VIGOROUS, WELL-ROOTED PLANTS AND ESTABLISHED IN THE CONTAINER IN WHICH THEY ARE SOLD. THE PLANTS SHALL HAVE TOPS WHICH ARE GOOD QUALITY AND ARE IN A HEALTHY GROWING CONDITION.
4. PLANTS SHALL NOT BE PRUNED PRIOR TO DELIVERY UNLESS APPROVED BY THE LANDSCAPE ARCHITECT PRIOER TO SHIPMENT.
5. ALL TREE PITS, SHRUB BEDS AND PREPARED PLANTING BEDS ARE TO BE COMPLETELY EXCAVATED IN ACCORDANCE WITH THE PLANTING DETAILS.
6. TOPSOIL AMENDMENTS REQUIRED FOR SOIL MIXES SHALL BE PROVIDED BY CONTRACTOR AND APPROVED BY LANDSCAPE ARCHITECT PRIOR TO INSTALLATION. CONTRACTOR MUST LOAD, HAUL, MIX AND SPREAD ALL TOPSOIL AND OTHER SOIL ADDITIVES AS REQUIRED ON SITE.
7. CONTRACTOR SHALL VERIFY AND/ OR AMEND ALL PLANTING SOILS TO ENSURE PROPER SUITABILITY INCLUDING STATE RECOMMENDED QUANTITIES OF NITROGEN, PHOSPHORUS, AND POTASH NUTRIENTS AND SOIL AMENDMENTS TO BE ADDED TO PRODUCE QUALITY PLANTING SOIL FOR ALL PLANT MATERIAL TO SURVIVE.
8. THE CONTRACTOR SHALL BE RESPONSIBLE FOR ENSURING THAT ALL PLANTING PITS PERCOLATE PROPERLY PRIOR TO PLANTING INSTALLATION.
9. SHRUBS, BULBS, AND GROUNDCOVERS SHALL BE TRIANGULARLY SPACED AT SPACING SHOWN ON PLANTING PLANS AND/OR IN THE PLANT SCHEDULE.
10. THE CONTRACTOR SHALL THE VERIFY EXTENT OF SEEDING OR SOD AREA WITH OWNER REPRESENTATIVE AND LANDSCAPE ARCHITECT PRIOR TO INSTALLATION.

TREE INSTALLATION NOTES

1. ALL TREES SHALL MEET AMERICAN STANDARD FOR NURSERY STOCK (ANSI, 1990, PART 1, "SHADE AND FLOWERING TREES").
2. TREES SUPPLIED MUST HAVE BEEN PROPERLY PLANTED AND GROWN IN THE NURSERY. THE ROOT CROWN (ALSO CALLED THE TRUNK FLARE) SHALL BE EVIDENT NEAR THE TOP OF THE GROUND. ANY EXCESS SOIL, UP TO 3 INCHES COVERING THE CROWN WILL HAVE TO BE REMOVED CAREFULLY BY HAND, IN ORDER TO PREVENT ROOT SCRAPES. THE TREE IS THEN TO BE PLANTED WITH THE ROOT CROWN IN PROPER RELATION TO THE SURROUNDING GRADE. ANY TREES WITH MORE THAN 3 INCHES OF SOIL ON TOP OF THE ROOT CROWN WILL BE REJECTED. THE NURSERY OWNERS MAY DIG OVERSIZE BALLS AND REMOVE THE SOIL IN ORDER FOR THE ROOT SYSTEM DIAMETER (WHICH IS THE REQUIRED ROOT BALL DIAMETER) TO MEET THE SPECIFICATION FOR THE TRUNK CALIPER REQUIRED.
3. BALL AND BURLAPPED (B&B) PLANTS MUST HAVE FIRM, NATURAL BALLS OF EARTH, OF DIAMETER NOT LESS THAN RECOMMENDED IN THE "TREE AND SHRUB TRANSPLANTING MANUAL", AND BE OF SUFFICIENT DEPTH TO INCLUDE THE FIBROUS AND FEEDING ROOTS. PLANTS MOVED WITH A BALL WILL NOT BE ACCEPTED IF THE BALL IS DRY, CRACKED OR BROKEN BEFORE OR DURING PLANTING OPERATIONS.
4. REMOVE ALL TREATED OR PLASTIC-COATED BURLAP, STRAPPING, WIRE OR NYLON TWINE FROM ROOT BALL. AFTER SETTING IN HOLE, CUT AWAY 2/3 OF WIRE BASKET, IF ANY, AND TOP 1/3 OF BURLAP.
5. SOAK ROOT BALL AND PIT IMMEDIATELY AFTER INSTALLATION.
6. CONSTRUCT 4" HIGH SAUCER (WATER BERM) OUTSIDE OF PLANT MIX BACK FILL.
7. WHERE TREES ARE PLANTED IN ROWS, THEY SHALL BE UNIFORM IN SIZE AND SHAPE.
8. NO EXISTING TREES SHALL BE REMOVED WITHOUT WRITTEN AUTHORIZATION FROM THE OWNER REPRESENTATIVE EXCEPT WHERE NOTED ON PLANS. NO GRUBBING SHALL OCCUR WITHIN EXISTING TREE AREAS.
9. THE CONTRACTOR SHALL STAKE THE LOCATIONS OF ALL PROPOSED TREES AND OBTAIN APPROVAL FROM THE LANDSCAPE ARCHITECT AND OWNER REPRESENTATIVE PRIOR TO INSTALLATION.
10. ALL TREES SHALL BE STAKED AT TIME OF INSTALLATION IN ACCORDANCE WITH PLANTING DETAILS.
11. THE CONTRACTOR SHALL ENSURE THAT TREES REMAIN VERTICAL AND UPRIGHT FOR THE DURATION OF THE GUARANTEE PERIOD.
12. STAKES FOR TREE SUPPORT SHALL BE CONSTRUCTED OF 2"x2" x18" UNTREATED PINE. GUYING FABRIC SHALL BE 'ARBOR TAPE', AS MANUFACTURED BY NEPTCO, PAWTUCKET, RI. (401) 722-5500 (OR APPROVED EQUAL). COLOR SHALL BE OLIVE DRAB.

SHRUB INSTALLATION NOTES

1. CUT ROOTS AS NECESSARY IN CONTAINERIZED PLANTS THAT ARE POT BOUND. REJECT PLANTS THAT HAVE GIRDLED ROOT OR ARE BOUND.
2. INSTALL TOP OF PLANT BALL 2" ABOVE ADJACENT GRADE.
3. TAMP PLANT SOIL MIX FIRMLY IN 8" LIFTS AROUND PLANT BALL.
4. SOAK PLANT BALL AND PIT IMMEDIATELY AFTER INSTALLATION.

THOMAS & HUTTON
Engineering | Surveying | Planning | GIS | Consulting
215 South Kerr Avenue • Unit B
Wilmington, NC 28403 • 910.332.3360
www.thomasandhutton.com
Savannah, GA | Brunswick, GA | Charleston, SC | Myrtle Beach, SC

SageDesign
SageDesign PLLC
Sara Burroughs, RLA
228 North Front Street
Suite 202D
Wilmington, NC 28401
Ph. (910)232-3878
sara@sagedesign.us

CONTRACT DATE:	XX.XX.XX
BUILDING TYPE:	TB07-BRB
PLAN VERSION:	XXX 20XX
SITE NUMBER:	XXXXXX
STORE NUMBER:	XXXXX

TACO BELL

4422 SOUTH 17TH STREET
FULTON STATION, NC

TB07-BRB

SHEET TITLE:

PLANTING DETAILS AND NOTES

JOB NO: J-####
DATE: 2/11/13
DRAWN BY: ####
DESIGNED: ####
REVIEWED: ####
APPROVED: ####
SCALE: ----

SHEET NO:

L1.02

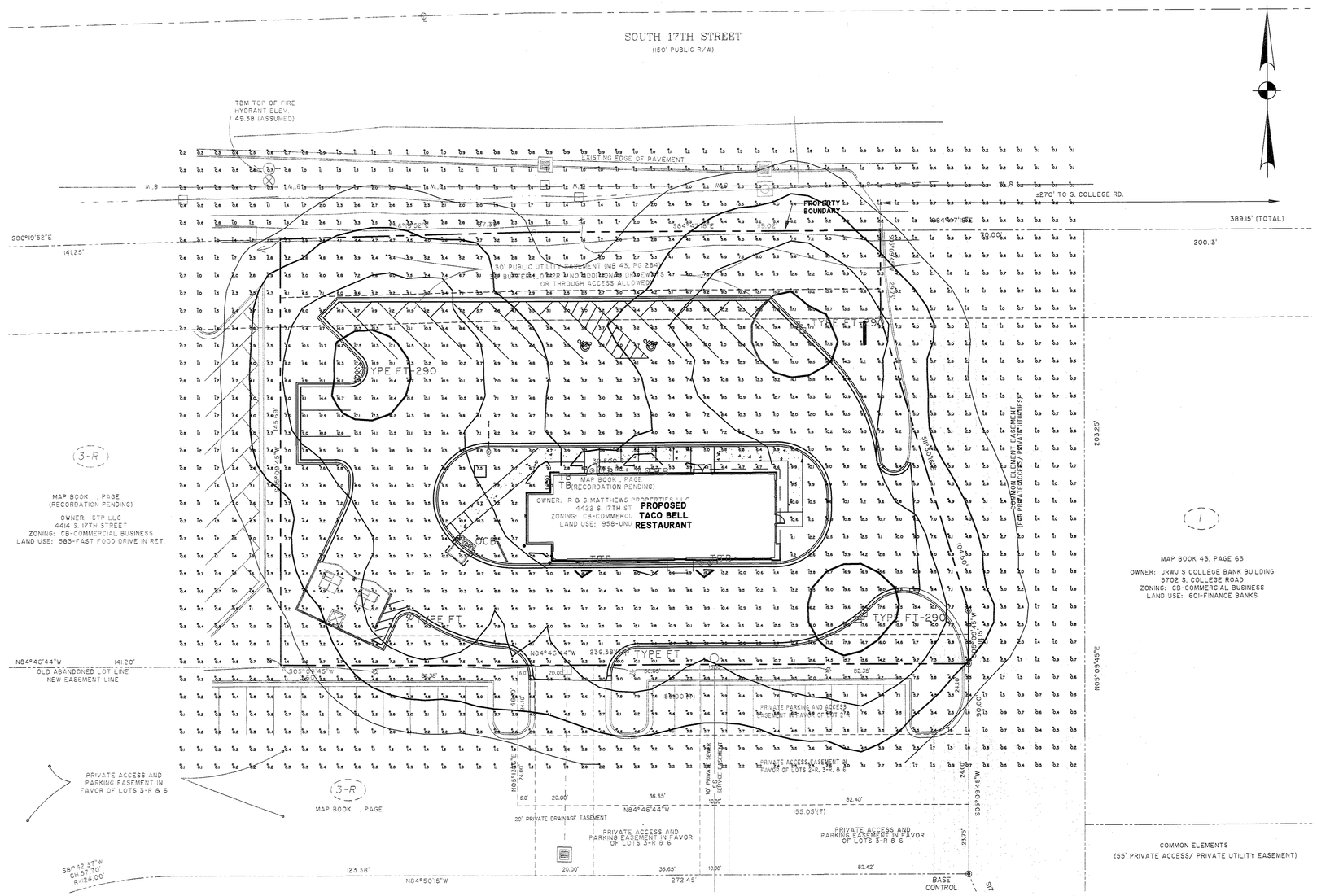

TACO BELL
4422 S. 17TH ST.
FULTON STATION, NC
PREPARED BY: JOHN BUJAKE
ACCUSERV LIGHTING & EQUIPMENT
877-707-7378
502-961-0357 FAX
jbujake@accu-serv.com
MARCH 8, 2013

Statistical Area Summary					
Project: All Projects					
Label	Avg	Max	Min	Avg/Min	Max/Min
PARKING LOT SURFACE	9.77	19.6	2.6	3.76	7.54
DRIVE-THRU LANE SURFACE	10.34	19.3	7.1	1.46	2.72

LIGHT LEVELS ARE MAINTAINED FOOT-CANDLES, INITIAL LEVELS ARE SLIGHTLY HIGHER

Luminaire Schedule							
Project: All Projects							
Symbol	Qty	Label	Arrangement	Lumens	LLF	Watts	Description
	1	OCB	SINGLE	12500	0.700	185	TACO BELL - ORDER POINT CANOPY
	9	TB	SINGLE	1230	0.900	36	ACCU 05247-051-052 @ 9.17' A.F.G.
	2	TYPE FT	SINGLE	110000	0.720	1080	ACCU 95200-FP10 / 95200-525S
	3	TYPE FT-290	2 @ 90 DEGREES	110000	0.720	1080	ACCU (2) 95200-FP10 / 95200-525D90

SITE FIXTURES ARE 1000W METAL HALIDE w/ SAG LENSES
POLES ARE 25'-0" FOR AN OVERALL FIXTURE MOUNTING HEIGHT OF 27'-6" A.F.G.

North Carolina
One Call Center
Call Before You Dig
"It's The Law"
1-800-632-4949

GRAPHIC SCALE
20 0 10 20 40 80
(IN FEET)
1 inch = 20 ft.

THOMAS & HUTTON
Engineering | Surveying | Planning | GIS | Consulting
215 South Kerr Avenue • Unit B
Wilmington, NC 28403 • 910.332.3360
www.thomasandhutton.com
Savannah, GA | Brunswick, GA | Charleston, SC | Myrtle Beach, SC

CONTRACT DATE: XX.XX.XX
BUILDING TYPE: LARGE 50 Ni
PLAN VERSION: AUGUST 2012
SITE NUMBER: 12-0276
STORE NUMBER: XXXXX

TACO BELL
4422 SOUTH 17TH STREET
FULTON STATION, NC

LARGE 50 Ni

SHEET TITLE:
LIGHTING PLAN

JOB NO: J-24078.0001
DATE: 02-12-2013
DRAWN BY: ----
DESIGNED: ----
REVIEWED: ----
APPROVED: ----
SCALE: 1" = 20'

SHEET NO:
E1.1