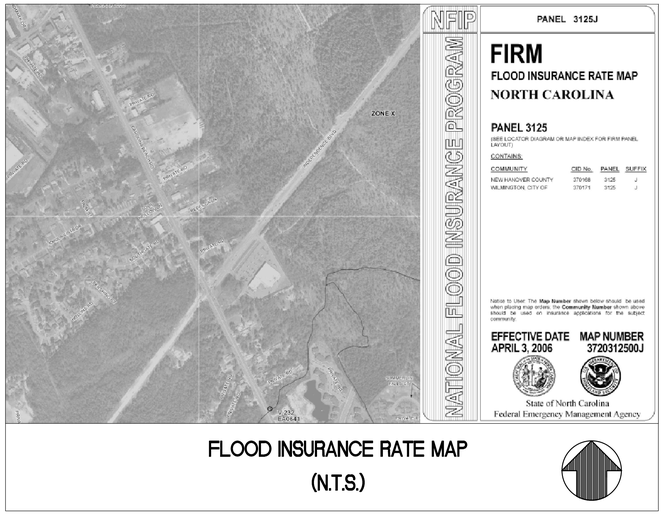

FLOOD INSURANCE RATE MAP
(N.T.S.)

SITE DEVELOPMENT PLANS FOR:

3739 CAROLINA BEACH RD WILMINGTON, NC
WILMINGTON
NEW HANOVER, NORTH CAROLINA
COMMUNITY BUSINESS

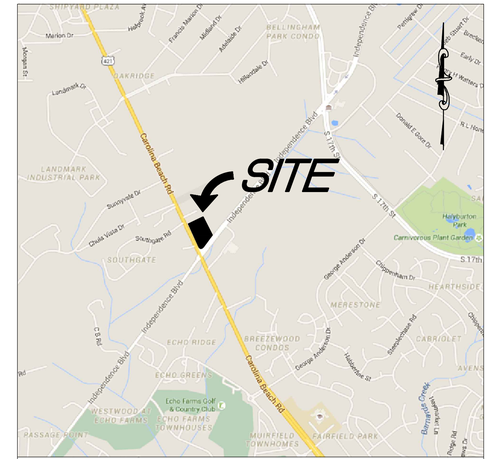

LOCATION MAP
(N.T.S)

SHEET INDEX:

C-0.0	COVER SHEET
C-0.1	SURVEY
C-1.0	SITE PLAN
C-1.1	DEMOLITION PLAN
C-1.2	ROAD PLAN
C-2.0	PAVING PLAN
C-3.0	GRADING PLAN
C-4.0	PRE-DRAINAGE PLAN
C-4.1	POST-DRAINAGE PLAN
C-5.0	EROSION CONTROL PLAN PHASE I
C-5.1	EROSION CONTROL PLAN PHASE II
C-5.2	EROSION CONTROL DETAILS
C-6.0	UTILITY PLAN
C-7.0	DETAIL SHEET
C-7.1	DETAIL SHEET
C-7.2	DETAIL SHEET
C-7.3	DETAIL SHEET
L-1.0	LANDSCAPE PLAN
L-1.1	LANDSCAPE DETAILS

ATTACHMENTS:
ALTA SURVEY

OWNER/DEVELOPER:

KANGAROO EXPRESS/CIRCLE K
CONTACT: ANDY PRIOLO

305 GREGSON DRIVE
CARY, NC, 27511
(919) 556 1714

CONTACTS:

PLANNING & DEVELOPMENT
JIM DIEPENBROCK
910.341.3257
JIM.DIEPENBROCK@WILMINGTONNC.GOV
305 CHESTNUT STREET
PO BOX 1810
WILMINGTON, NC 28402

FIRE
SAMMY FLOWERS
910.343.3918
SAMMY.FLOWERS@WILMINGTONNC.GOV

NCDOT
ALLEN HANCOCK
910.251.2655
DAHANCOCK@NCDOT.GOV

STORMWATER
ROB BORDON
910.341.5856
ROB.GORDON@WILMINGTONNC.GOV

WATER/WASTEWATER
KENT HARRELL, PE
910.332.6560
KENT.HARRELL@CFPUA.ORG

CITY TRAFFIC
BILL MCDOW
910.341.7819
BILL.MCDOW@WILMINGTONNC.GOV

ELECTRIC
DUKE ENERGY
MARK A. HATFIELD
DISTRIBUTION ENGINEERING
COASTAL PLAINS DIVISION
404 RALEIGHT STREET
WILMINGTON, NC 28412
910.350.3428

TELEPHONE
AT&T
JAMES BATSON
910.341.1621
JB7093@ATT.COM

ENGINEER:

GreenbergFarrow

CONTACT: LARRY DIEHL
1430 WEST PEACHTREE ST. NW, SUITE 200
ATLANTA, GA 30309
(404) 601 3671

NORTH CAROLINA PROFESSIONAL SEAL ENGINEER JOHN H. NOURZAD
2/3/16

SURVEYOR

ALTA/ACSM LAND TITLE SURVEY

BOWMAN CONSULTING
210 SEVEN FARMS DRIVE, SUITE 101
CHARLESTON, SC, 29492
(843) 501-0333
SURVEYOR'S PROJECT NO. 8237-01-017

GEOTECHNICAL ENGINEER:

UNITED CONSULTANTS
625 HOLCOMB BRIDGE ROAD
NORCROSS, GEORGIA, 30071
(770) 209-0029
PROJECT NO. 2015.1064.01

CITY OF WILMINGTON NORTH CAROLINA
Public Services Engineering Division
APPROVED STORMWATER MANAGEMENT PLAN
Date: _____ Permit #_____
Signed: _____

Approved Construction Plan
Name Date
Planning _____
Traffic _____
Fire _____

APPROVAL:

_____ COUNTY PUBLIC WORKS DIVISION: _____

NO.	DATE	DESCRIPTION	BY
--			
--			
--	02-03-16	COW SITE RESUBMITTAL	
2	02-03-16	NCDOT RESUBMITTAL	
1	12-02-15	DP SUBMITTAL	RS
0	10-20-15	SITE PLAN	RS

BCPWD CASE #: PWCO 20140050

JOB NO. 20151091 DATE: 02-03-16

VICINITY MAP
SCALE: 1"=3000'

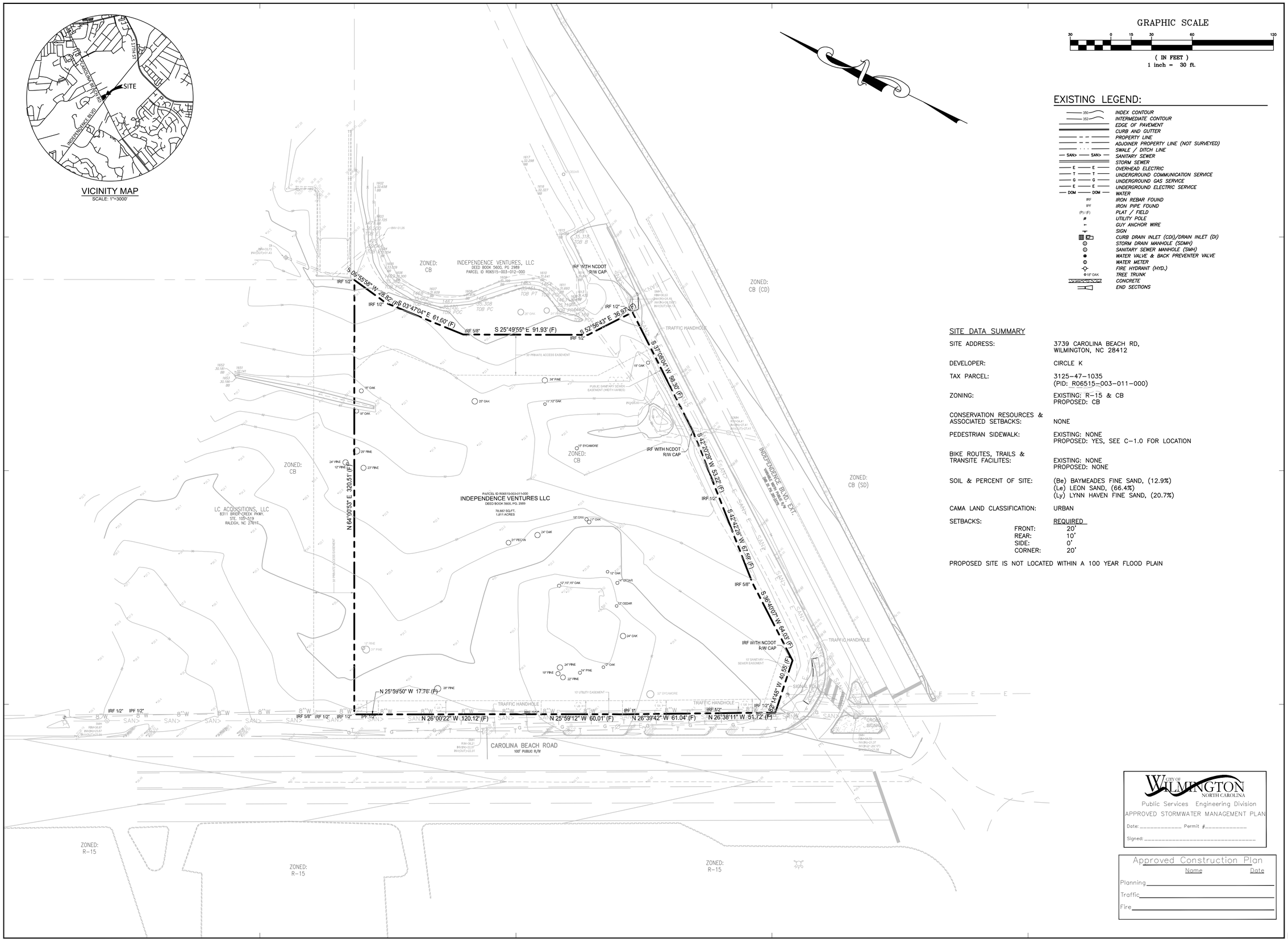

GRAPHIC SCALE

30 0 15 30 60 120

(IN FEET)
1 inch = 30 ft.

EXISTING LEGEND:

- INDEX CONTOUR
- INTERMEDIATE CONTOUR
- EDGE OF PAVEMENT
- CURB AND GUTTER
- PROPERTY LINE
- ADJOINER PROPERTY LINE (NOT SURVEYED)
- SWALE / DITCH LINE
- SANITARY SEWER
- STORM SEWER
- OVERHEAD ELECTRIC
- UNDERGROUND COMMUNICATION SERVICE
- UNDERGROUND GAS SERVICE
- UNDERGROUND ELECTRIC SERVICE
- WATER
- IRF — IRON REBAR FOUND
- IPF — IRON PIPE FOUND
- (P) / (F) — PLAT / FIELD
- UTILITY POLE
- GUY ANCHOR WIRE
- SIGN
- CURB DRAIN INLET (CDI)/DRAIN INLET (DI)
- STORM DRAIN MANHOLE (SDMH)
- SANITARY SEWER MANHOLE (SMH)
- WATER VALVE & BACK PREVENTER VALVE
- WATER METER
- FIRE HYDRANT (HYD.)
- 18" OAK — TREE TRUNK
- CONCRETE
- END SECTIONS

SITE DATA SUMMARY

SITE ADDRESS:	3739 CAROLINA BEACH RD, WILMINGTON, NC 28412
DEVELOPER:	CIRCLE K
TAX PARCEL:	3125-47-1035 (PID: R06515-003-011-000)
ZONING:	EXISTING: R-15 & CB PROPOSED: CB
CONSERVATION RESOURCES & ASSOCIATED SETBACKS:	NONE
PEDESTRIAN SIDEWALK:	EXISTING: NONE PROPOSED: YES, SEE C-1.0 FOR LOCATION
BIKE ROUTES, TRAILS & TRANSITE FACILITES:	EXISTING: NONE PROPOSED: NONE
SOIL & PERCENT OF SITE:	(Be) BAYMEADES FINE SAND, (12.9%) (Le) LEON SAND, (66.4%) (Ly) LYNN HAVEN FINE SAND, (20.7%)
CAMA LAND CLASSIFICATION:	URBAN
SETBACKS:	REQUIRED
FRONT:	20'
REAR:	10'
SIDE:	0'
CORNER:	20'

PROPOSED SITE IS NOT LOCATED WITHIN A 100 YEAR FLOOD PLAIN

City of WILMINGTON NORTH CAROLINA
Public Services Engineering Division
APPROVED STORMWATER MANAGEMENT PLAN
Date: _____ Permit #_____
Signed: _____

Approved Construction Plan

	Name	Date
Planning		
Traffic		
Fire		

GreenbergFarrow
COA#:
5500 Democracy Drive, Suite 125
Plano, TX 75024
t: 972 362 6118

PROJECT TEAM

COPYRIGHT NOTICE
This drawing is the property of the above referenced Professional and is not to be used for any purpose other than the specific project and site named herein, and cannot be reproduced in any manner without the express written permission from the Professional

ISSUE/REVISION RECORD

DATE	DESCRIPTION
10-20-15	SITE PLAN
12-02-15	DP SUBMITTAL
02-03-16	NCDOT RESUBMITTAL
02-03-16	COW SITE RESUBMITTAL

NORTH CAROLINA PROFESSIONAL SEAL ENGINEER JOHN H. NOURZAD
2/3/16

PROFESSIONAL IN CHARGE
JOHN NOURZAD
PROFESSIONAL ENGINEER
LICENSE NO. 023207
PROJECT MANAGER
LARRY DIEHL
QUALITY CONTROL
FEDERICO OLIVARES, PE
DRAWN BY
RYAN SCOTT, EIT

PROJECT NAME

CIRCLE K CAROLINA BEACH

WILMINGTON NORTH CAROLINA

3739 CAROLINA BEACH RD WILMINGTON, NC

PROJECT NUMBER
20151091

SHEET TITLE

SURVEY & SITE INVENTORY

SHEET NUMBER

C-0.1

NOT ISSUED FOR CONSTRUCTION

NOTES:

1. PRIOR TO ANY CLEARING, GRADING OR CONSTRUCTION ACTIVITY, TREE PROTECTION FENCING SHALL BE INSTALLED AROUND PROTECTED TREES OR GROVES OF TREES. NO CONSTRUCTION WORKERS, TOOLS, MATERIALS, OR VEHICLES ARE PERMITTED WITHIN THE TREE PROTECTION FENCING.
2. ANY TREES AND/OR AREAS DESIGNATED TO BE PROTECTED MUST BE PROPERLY BARRICADED WITH FENCING AND PROTECTED THROUGHOUT CONSTRUCTION TO INSURE THAT NO CLEARING, GRADING OR STAGING OF MATERIALS WILL OCCUR IN THOSE AREAS.
3. NO EQUIPMENT IS ALLOWED ON SITE UNTIL ALL TREE PROTECTION FENCING AND SILT FENCING IS INSTALLED AND APPROVED. PROTECTIVE FENCING IS TO BE MAINTAINED THROUGHOUT THE DURATION OF THE PROJECT, AND CONTRACTORS SHALL RECEIVE ADEQUATE INSTRUCTION ON TREE PROTECTION METHODS.
4. ALL PAVEMENT MARKINGS IN PUBLIC RIGHTS-OF-WAY AND FOR DRIVEWAYS ARE TO BE THERMOPLASTIC AND MEET CITY AND/OR NCDOT STANDARDS.
5. ONCE STREETS ARE OPEN TO TRAFFIC, CONTACT TRAFFIC ENGINEERING REGARDING THE INSTALLATION OF TRAFFIC AND STREET NAME SIGNS. PROPOSED STREET NAMES MUST BE APPROVED PRIOR TO INSTALLATION OF STREET NAME SIGNS.
6. TRAFFIC CONTROL DEVICES (INCLUDING SIGNS AND PAVEMENT MARKINGS) IN AREAS OPEN TO PUBLIC TRAFFIC ARE TO MEET MUTCD (MANUAL ON UNIFORM TRAFFIC CONTROL DEVICES) STANDARDS.
7. CONTACT TRAFFIC ENGINEERING AT 910-341-7888 TO ENSURE THAT ALL TRAFFIC SIGNAL FACILITIES AND EQUIPMENT ARE SHOWN ON THE PLAN.
8. CALL TRAFFIC ENGINEERING AT 910-341-7888 FORTY-EIGHT (48) HOURS PRIOR TO ANY EXCAVATION IN THE RIGHT-OF-WAY.
9. TRAFFIC ENGINEERING MUST APPROVE OF PAVEMENT MARKING PRIOR TO ACTUAL STRIPING.
10. ALL PARKING STALL MARKINGS AND LANE ARROWS WITHIN THE PARKING AREAS SHALL BE WHITE.
11. ALL TRAFFIC CONTROL SIGNS AND MARKINGS OFF THE RIGHT-OF-WAY ARE TO BE MAINTAINED BY THE PROPERTY OWNER IN ACCORDANCE WITH MUTCD STANDARDS.
12. STOP SIGNS AND STREET SIGNS TO REMAIN IN PLACE DURING CONSTRUCTION.
13. TACTILE WARNING MATS WILL BE INSTALLED ON ALL WHEELCHAIR RAMPS.
14. A UTILITY CUT PERMIT IS REQUIRED FOR EACH OPEN CUT OF A CITY STREET.
15. ANY BROKEN OR MISSING SIDEWALK PANELS, DRIVEWAY PANELS AND CURBING WILL BE REPLACED.
16. CONTACT FRAFFIC ENGINEERING AT (910)341-7888 TO DISCUSS STREET LIGHTING OPTIONS.
17. WATER AND SEWER SERVICE SHALL MEET CAPE FEAR PUBLIC UTILITY AUTHORITY (CFPUA) DETAILS AND SPECIFICATIONS.
18, PROJECT SHALL COMPLY WITH CFPUA CROSS CONNECTION CONTROL REQUIREMENTS. WATER METER(S) CANNOT BE RELEASED UNTIL ALL REQUIREMENTS ARE MET AND THE STATE HAS GIVEN THEIR FINAL APPROVAL. CALL 910-343-3910 FOR INFORMATION.
19. IF THE CONTRACTOR DESIRES CFPUA WATER FOR CONSTRUCTION, HE SHALL APPLY IN ADVANCE FOR THIS SERVICE AND MUST PROVIDE A REDUCED PRESSURE ZONE (RPZ) BACKFLOW PREVENTION DEVICE ON THE DEVELOPER'S SIDE OF THE WATER METER BOX.
20. ANY IRRIGATION SYSTEM SUPPLIED BY CFPUA WATER SHALL COMPLY WITH THE CFPUA CROSS CONNECTION CONTROL REGULATIONS. CALL 919-343-3910 FOR INFORMATION.
21. ANY IRRIGATION SYSTEM SHALL BE EQUIPPED WITH A RAIN AND FREEZER SENSOR.
22. ANY BACKFLOW PREVENTION DEVICES REQUIRED BY THE CFPUA WILL NEED TO BE ON THE LIST OF APPROVED DEVICES BY USCFCCCHR OR ASSE.
23. CONTRACTOR TO FIELD VERIFY EXISTING WATER AND SEWER SERVICE LOCATIONS, SIZES AND MATERIALS PRIOR TO CONSTRUCTION. ENGINEER TO BE NOTIFIED OF ANY CONFLICTS.
24. CONTRACTOR SHALL MAINTAIN ALL-WEATHER ACCESS FOR EMERGENCY VEHICLES AT ALL TIMES DURING CONSTRUCTION.
25. UNDERGROUND FIRE LINE(S) MUST BE PERMITTED AND INSPECTED BY THE WILMINGTON FIRE DEPARTMENT FROM THE PUBLIC RIGHT-OF-WAY TO THE BUILDING. CONTACT THE WILMINGTON FIRE DEPARTMENT DIVISION OF FIRE AND LIFE SAFETY AT 910-341-0696.
26. NO OBSTRUCTIONS ARE PERMITTED IN THE SPACE BETWEEN THIRTY (30) INCHES AND TEN (10) FEET ABOVE THE GROUND WITHIN THE TRIANGULAR SIGHT DISTANCE.
27. CONTACT THE NORTH CAROLINA ONE CALL CENTER AT 1-800-632-4949 PRIOR TO DOING ANY DIGGING, CLEARING, OR GRADING

NOTE: THE PROPOSED SITE DOES NOT CONTAIN ANY WETLANDS

TYPE OF CONSTRUCTION OF BUILDING PER INTERNATIONAL BUILDING CODE:
BUILDING V-B
CANOPY II-B

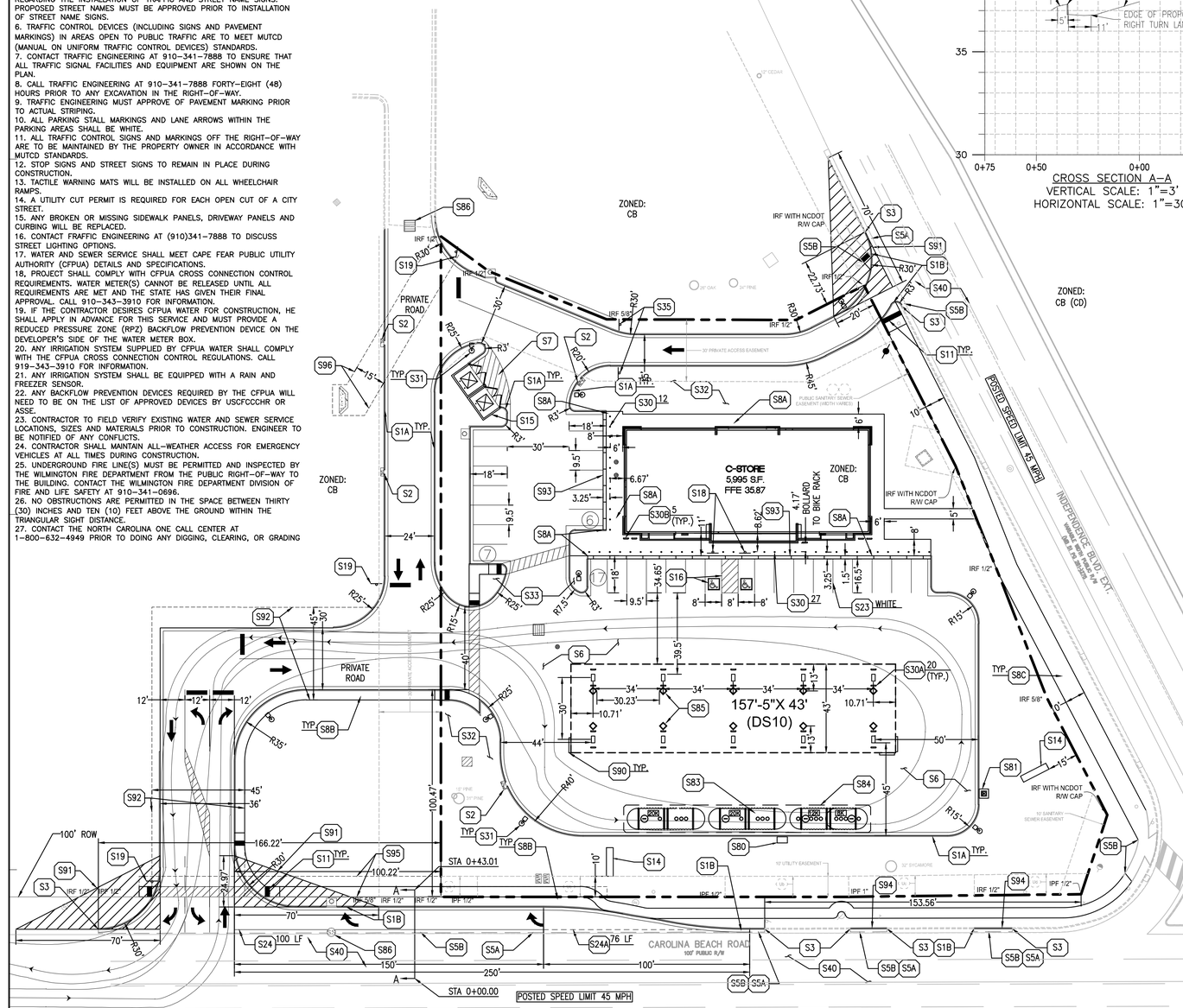

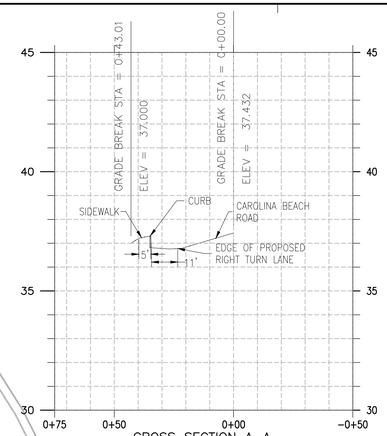

CROSS SECTION A-A
VERTICAL SCALE: 1"=3'
HORIZONTAL SCALE: 1"=30'

SITE KEY NOTES

S1A	CONCRETE CURB AND GUTTER PER CITY OF WILMINGOTN STD. S07-01
S1B	CONCRETE BARRIER CURB PER NCDOT STD. 846.01
S2	CURB CUT PER DETAIL C-7.0
S3	TAPER CURB TO MATCH EXISTING.
S5A	LIMITS OF SAWCUT AND PAVEMENT REMOVAL.
S5B	MATCH EXISTING PAVEMENT ELEVATION.
S6	STANDARD DUTY ASPHALT/CONCRETE PAVING (PER PAVING DETAIL)
S7	HEAVY DUTY ASPHALT/CONCRETE PAVING (PER PAVING DETAIL)
S8A	CONCRETE SIDEWALK (PER COW SD 3-10)
S8B	CONCRETE SIDEWALK (PER NCDOT 848.01)
S8C	CONCRETE SIDEWALK 10' WIDE (PER COW)
S11	DETECTABLE WARNINGS PER ADA REQUIREMENTS (PER COW SD3-08)
S14	MONUMENT / PYLON SIGN (BY OTHERS)
S15	DUMPSTER ENCLOSURE (PER ARCH. PLANS)
S16	ADA ACCESSIBLE PARKING SPACE STRIPING & SYMBOL OF ACCESSIBILITY (TYPICAL-PER ADA AND LOCAL REQUIREMENTS)
S18	VAN ACCESSIBLE PARKING SIGN (TYPICAL-PER ADA AND LOCAL REQUIREMENTS)
S19	"STOP" SIGN
S23	PARKING STALL STRIPING (PER LOCAL CODES)
S24	4" TRAFFIC LANE STRIPE (SEE NOTE FOR LENGTH) (NCDOT 1205.05)
S24A	TRAFFIC LANE STRIPE (3'-9" WHITE/SP MINI-SKIP LINE PER NCDOT 1205.05)
S30	BOLLARD (SEE NOTE FOR NUMBER)
S30A	"INVERTED U" BOLLARD PER ARCH. PLAN (SEE NOTE FOR NUMBER)
S30B	"INVERTED U" BIKE RACK BOLLARD (SEE NOTE FOR NUMBER)
S31	LIGHT POLE (TYPICAL-PER LIGHTING PLAN)
S32	LANDSCAPE AREA (PER LANDSCAPE PLAN)
S33	LANDSCAPE ISLAND (PER LANDSCAPE PLAN)
S35	"DO NOT ENTER" SIGN
S40	EXISTING PAVEMENT TO REMAIN.
S80	UST VENT STACK, REFER TO FUELING PLANS
S81	AIR/ YARD HYDRANT
S83	UNDERGROUND STORAGE TANKS, SEE FUELING PLANS FOR DETAIL
S84	HEAVY DUTY CONCRETE PAVING, SEE FUELING PLANS FOR DETAIL
S85	CANOPY COLUMN
S86	EXISTING CURB INLET TO BE CONVERTED INTO JUNCTION BOX WITH MANHOLE
S90	CANOPY SIGN (PER ARCH. PLANS)
S91	TRIANGULAR SIGHT DISTANCE
S92	PROPOSED PRIVATE ACCESS EASEMENT
S93	PROPOSED FLUSH STAMPED BRICK CONCRETE
S94	EXISTING DRIVEWAY TO BE CLOSE AND RESTORED THE VERGE AREA TO MATCH THE EXISTING SURROUNDINGS
S95	PROPOSED PEDESTRIAN ACCESS EASEMENT
S96	PROPOSED DRAINAGE EASEMENT

SITE DATA SUMMARY:

PROJECT NAME:	CIRCLE K 20151091	
PROJECT ADDRESS:	3739 CAROLINA BEACH ROAD, WILMINGTON, NC, 28412	
PARCEL ID NUMBER:	R06515-003-011-000	
ZONING:	EXISTING: R-15 & CB PROPOSED: CB	
BUILDING SETBACKS:	REQUIRED	PROPOSED
FRONT:	20'	171'
REAR:	10'	52'
SIDE:	0'	27' & 89'
CORNER:	20'	189'
CIRCLE K TRACT:	1.811 ACRES/ 78,882 SF	
CONVENIENCE STORE:	5,995 SF	
NUMBER OF BUILDINGS:	1	
NUMBER OF STORIES:	1	
BUILDING HEIGHT:	23'8"	
CANOPY WITH 10 PUMP ISLANDS:	6,515 SF	
FAR:	1:07.59	
PARKING PROVIDED:	30 (2 ACCESS. PARKING SPACES)	
PARKING REQUIRED:	15 MINIMUM (2 ACCESS. PARKING SPACES)	
IMPERVIOUS COVER:		
EXISTING:	1,119 SF	
PROPOSED:	51,510 SF	
PERVIOUS COVER:		
EXISTING:	77,763 SF	
PROPOSED:	27,371 SF	
LOT COVERAGE:		
EXISTING:	0.01 (1,119 SF)	
PROPOSED:	0.65 (51,510 SF)	
CAMA LAND USE CLASSIFICATION:	URBAN DEVELOPMENT	
INTERNATIONAL BUILDING CODE:		
C-STORE BUILDING:	V-B	NON-SPRINKLERED
FUEL CANOPY:	II-B	NON-SPRINKLERED

BICYCLE PARKING PROVIDED: 5 BICYCLE PARKING
BICYCLE PARKING REQUIRED: 5 BICYCLE PARKING

Approved Construction Plan
Name Date
Planning
Traffic
Fire

CITY OF WILMINGTON NORTH CAROLINA
Public Services Engineering Division
APPROVED STORMWATER MANAGEMENT PLAN
Date: _____ Permit #_____
Signed: _____

GRAPHIC SCALE
30 0 15 30 60 120
(IN FEET)
1 inch = 30 ft.

EXISTING LEGEND:

- 350 — INDEX CONTOUR
- 352 — INTERMEDIATE CONTOUR
- EDGE OF PAVEMENT
- CURB AND GUTTER
- PROPERTY LINE
- ADJOINER PROPERTY LINE (NOT SURVEYED)
- SWALE / DITCH LINE
- SAN — SANITARY SEWER
- STORM SEWER
- E — OVERHEAD ELECTRIC
- T — UNDERGROUND COMMUNICATION SERVICE
- G — UNDERGROUND GAS SERVICE
- E — UNDERGROUND ELECTRIC SERVICE
- DOM — WATER
- IRF — IRON REBAR FOUND
- IPF — IRON PIPE FOUND
- (PI) (F) — PLAT / FIELD
- UTILITY POLE
- GUY ANCHOR WIRE
- SIGN
- CURB DRAIN INLET (CDI)/DRAIN INLET (DI)
- STORM DRAIN MANHOLE (SDMH)
- SANITARY SEWER MANHOLE (SMH)
- WATER VALVE & BACK PREVENTER VALVE
- WATER METER
- FIRE HYDRANT (HYD.)
- 18" OAK — TREE TRUNK
- CONCRETE
- END SECTIONS

PROPOSED LEGEND:

- PROPERTY LINE
- PROPOSED CURB & GUTTER
- PROPOSED STAMPED BRICK CONCRETE
- PROPOSED FIRELANE
- MOUNTABLE CURB W/ CONCRETE STAMPED BRICK PATTERN
- MULTIPLE PRODUCT DISPENSER WITH CANOPY COLUMNS AND BOLLARDS
- PROPOSED SITE LIGHT, SEE PHOTOMETRIC PLAN
- PROPOSED DRAINAGE STRUCTURES (SEE GRADING/DRAINAGE PLANS)
- # PROPOSED PARKING SPACES

GENERAL SITE NOTES:

1. CONTRACTOR MUST SECURE ALL NECESSARY PERMITS PRIOR TO STARTING WORK.

2. IF THE CONTRACTOR, IN THE COURSE OF THE WORK, FINDS ANY DISCREPANCIES BETWEEN THE PLANS AND THE PHYSICAL CONDITIONS OF THE LOCALITY, OR ANY ERRORS OR OMISSIONS IN THE PLANS OR IN THE LAYOUT AS GIVEN BY THE ENGINEER, IT SHALL BE HIS DUTY TO IMMEDIATELY INFORM THE ENGINEER, IN WRITING, AND THE ENGINEER WILL PROMPTLY VERIFY THE SAME. ANY WORK DONE AFTER SUCH A DISCOVERY, UNTIL AUTHORIZED, WILL BE AT THE CONTRACTOR'S RISK.

3. CONTRACTOR SHALL BE RESPONSIBLE FOR VERIFICATION OF ALL SETBACKS, EASEMENTS, AND DIMENSIONS SHOWN HEREON BEFORE BEGINNING CONSTRUCTION.

4. ALL CONSTRUCTION MATERIALS AND WORKMANSHIP SHALL BE IN ACCORDANCE TO THE STATE AND LOCAL GOVERNMENT AGENCY LATEST CONSTRUCTION SPECIFICATIONS AND DETAILS.

5. ALL HANDICAP SITE FEATURES SHALL BE CONSTRUCTED TO MEET ALL FEDERAL, STATE AND LOCAL CODE.

6. NOTIFY THE CITY INSPECTOR TWENTY-FOUR (24) HOURS BEFORE BEGINNING EACH PHASE OF CONSTRUCTION.

7. THE CONTRACTOR SHALL CAREFULLY PRESERVE BENCHMARKS, REFERENCE POINTS, AND STAKES.

8. ARCHITECTURAL PLANS ARE TO BE USED FOR BUILDING STAKE OUT.

9. ALL DIMENSIONS ARE FROM FACE OF BUILDING, CURB, AND WALL UNLESS OTHERWISE SPECIFIED ON PLANS.

10. CONTRACTOR SHALL MAINTAIN THE SITE IN A MANNER SO THAT WORKMEN AND PUBLIC SHALL BE PROTECTED FROM INJURY, AND ADJOINING PROPERTY PROTECTED FROM DAMAGE.

11. CONTRACTOR IS RESPONSIBLE FOR DAMAGE TO ANY EXISTING ITEM AND/OR MATERIAL INSIDE OR OUTSIDE CONTRACT LIMITS DUE TO CONSTRUCTION OPERATION.

12. ALL STREET SURFACES, DRIVEWAYS, CULVERTS, CURB AND GUTTERS, ROADSIDE DRAINAGE DITCHES AND OTHER STRUCTURES THAT ARE DISTURBED OR DAMAGED IN ANY MANNER AS A RESULT OF CONSTRUCTION SHALL BE REPLACED OR REPAIRED IN ACCORDANCE WITH THE SPECIFICATIONS.

13. ALL ROAD WORK SHALL BE PERFORMED IN ACCORDANCE WITH THE STATE AND LOCAL GOVERNMENT AGENCY SPECIFICATIONS.

14. STANDARD/HEAVY DUTY PAVEMENT AND CONCRETE SECTIONS SHALL FOLLOW THE XXXXXXXXXX, DATED XXXXXX XX, XXXX

15. ALL CURB RADII SHALL BE 5' UNLESS OTHERWISE NOTED ON THE PLANS.

16. ALL PROPOSED VEGETATION WITHIN SIGHT TRIANGLES SHALL NOT INTERFERE WITH CLEAN VISUAL SIGHT LINES FROM 30" TO 10' IN ELEVATION.

GreenbergFarrow
COA#:
5500 Democracy Drive, Suite 125
Plano, TX 75024
t: 972 362 6118

PROJECT TEAM

COPYRIGHT NOTICE
This drawing is the property of the above referenced Professional and is not to be used for any purpose other than the specific project and site named herein, and cannot be reproduced in any manner without the express written permission from the Professional

ISSUE/REVISION RECORD

DATE	DESCRIPTION
10-20-15	SITE PLAN
12-02-15	DP SUBMITTAL
02-03-16	NCDOT RESUBMITTAL
02-03-16	COW SITE RESUBMITTAL

NORTH CAROLINA PROFESSIONAL SEAL ENGINEER JOHN H. NOURZAD
2/3/16

PROFESSIONAL IN CHARGE
JOHN NOURZAD
PROFESSIONAL ENGINEER
LICENSE NO. 023207
PROJECT MANAGER
LARRY DIEHL
QUALITY CONTROL
FEDERICO OLIVARES, PE
DRAWN BY
RYAN SCOTT, EIT

PROJECT NAME

CIRCLE K CAROLINA BEACH

WILMINGTON NORTH CAROLINA

3739 CAROLINA BEACH RD WILMINGTON, NC

PROJECT NUMBER
20151091

SHEET TITLE
SITE PLAN

SHEET NUMBER
C-1.0

NOT ISSUED FOR CONSTRUCTION

Approved Construction Plan

	Name	Date
Planning		
Traffic		
Fire		

CITY OF WILMINGTON NORTH CAROLINA
Public Services Engineering Division
APPROVED STORMWATER MANAGEMENT PLAN
Date: _____ Permit #_____
Signed: _____

811 Know what's **below.** **Call** before you dig.

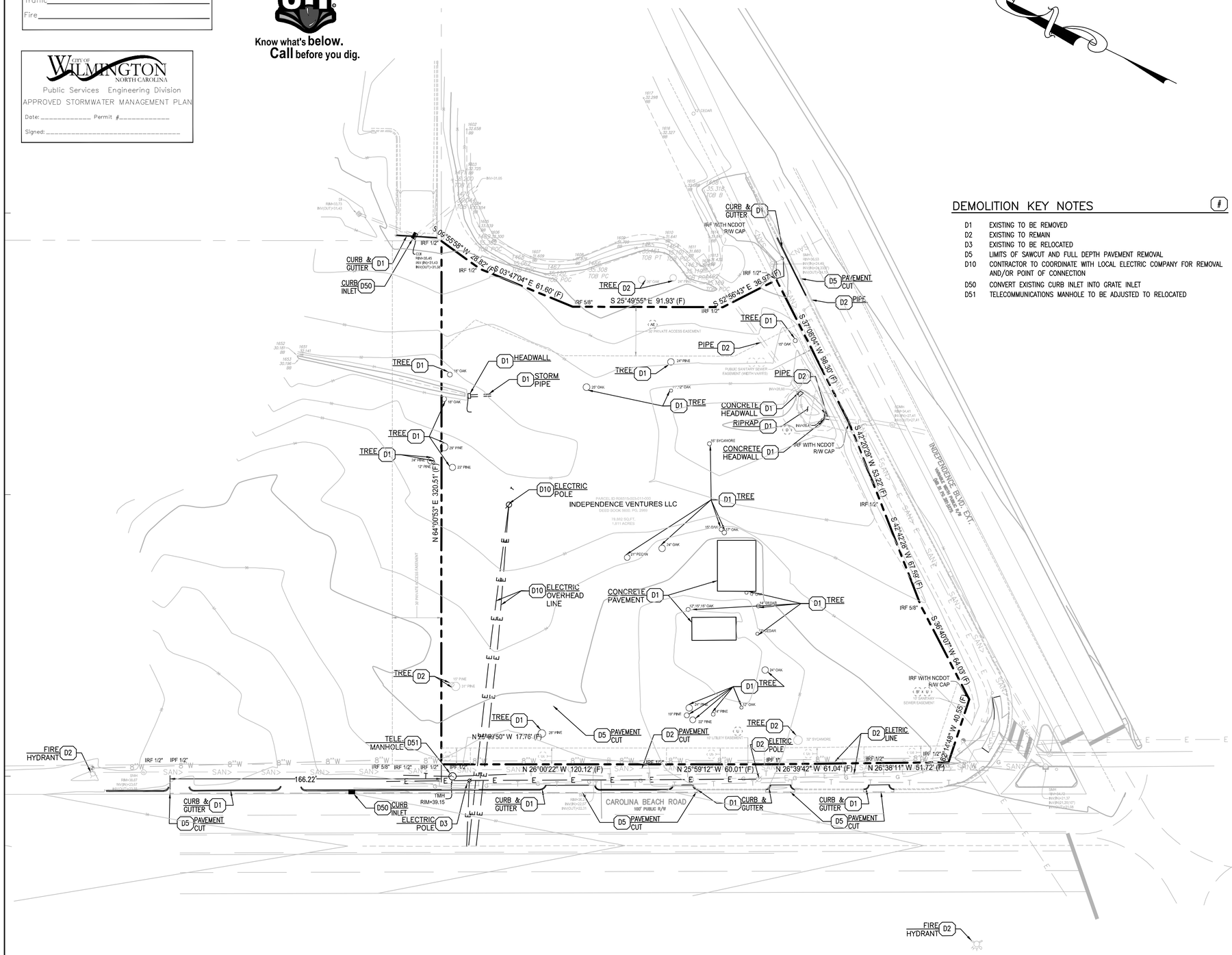

DEMOLITION KEY NOTES

D1	EXISTING TO BE REMOVED
D2	EXISTING TO REMAIN
D3	EXISTING TO BE RELOCATED
D5	LIMITS OF SAWCUT AND FULL DEPTH PAVEMENT REMOVAL
D10	CONTRACTOR TO COORDINATE WITH LOCAL ELECTRIC COMPANY FOR REMOVAL AND/OR POINT OF CONNECTION
D50	CONVERT EXISTING CURB INLET INTO GRATE INLET
D51	TELECOMMUNICATIONS MANHOLE TO BE ADJUSTED TO RELOCATED

GRAPHIC SCALE

30 0 15 30 60 120

(IN FEET)
1 inch = 30 ft.

EXISTING LEGEND:

350	INDEX CONTOUR
352	INTERMEDIATE CONTOUR
	EDGE OF PAVEMENT
	CURB AND GUTTER
	PROPERTY LINE
	ADJOINER PROPERTY LINE (NOT SURVEYED)
	SWALE / DITCH LINE
SAN>	SANITARY SEWER
	STORM SEWER
E	OVERHEAD ELECTRIC
T	UNDERGROUND COMMUNICATION SERVICE
G	UNDERGROUND GAS SERVICE
E	UNDERGROUND ELECTRIC SERVICE
DOM	WATER
IRF	IRON REBAR FOUND
IPF	IRON PIPE FOUND
(P) (F)	PLAT / FIELD
	UTILITY POLE
	GUY ANCHOR WIRE
	SIGN
	CURB DRAIN INLET (CDI)/DRAIN INLET (DI)
	STORM DRAIN MANHOLE (SDMH)
	SANITARY SEWER MANHOLE (SMH)
	WATER VALVE & BACK PREVENTER VALVE
	WATER METER
	FIRE HYDRANT (HYD.)
18" OAK	TREE TRUNK
	CONCRETE
	END SECTIONS

GENERAL DEMOLITION NOTES:

1. ANY DEMOLITION IS TO BE PERFORMED IN STRICT CONFORMANCE WITH ALL APPLICABLE CITY, COUNTY AND STATE, AND/OR GOVERNING BODY'S STANDARDS.

2. THE DEMOLITION PLAN SHALL BE DONE IN CONJUNCTION WITH THE GEOTECHNICAL INVESTIGATION REPORT.

3. EROSION AND SEDIMENT CONTROL MEASUREMENTS SHALL BE MAINTAINED AT ALL TIMES DURING DEMOLITION.

4. THE PURPOSE OF THIS DRAWING IS TO CONVEY THE OVERALL SCOPE OF WORK AND IT IS NOT INTENDED TO COVER ALL DETAILS OR SPECIFICATIONS REQUIRED TO COMPLY WITH GENERALLY ACCEPTED DEMOLITION PRACTICES. CONTRACTOR SHALL THOROUGHLY FAMILIARIZE HIMSELF WITH THE SITE, SCOPE OF WORK, AND ALL EXISTING CONDITIONS AT THE JOB SITE PRIOR TO BIDDING AND COMMENCING THE WORK. THE DEMOLITION CONTRACTOR SHALL BE SOLELY RESPONSIBLE FOR MEANS, METHODS, TECHNIQUES, OR PROCEDURES USED TO COMPLETE THE WORK IN ACCORDANCE WITH THE CONSTRUCTION DOCUMENTS AND IS LIABLE FOR THE SAFETY OF THE PUBLIC OR CONTRACTOR'S EMPLOYEES DURING THE COURSE OF THE PROJECT.

5. THE DEMOLITION PLAN IS INTENDED TO SHOW REMOVAL OF KNOWN SITE FEATURES AND UTILITIES AS SHOWN ON THE SURVEY. THERE MAY BE OTHER SITE FEATURES, UTILITIES, STRUCTURES, AND MISCELLANEOUS ITEMS BOTH BURIED AND ABOVE GROUND THAT ARE WITHIN THE LIMITS OF WORK THAT MAY NEED TO BE REMOVED FOR THE PROPOSED PROJECT THAT ARE NOT SHOWN HEREON. THE CONTRACTOR IS RESPONSIBLE FOR THE REMOVAL OF SUCH ITEMS AT NO ADDITIONAL COST TO THE OWNER.

5. THE CONTRACTOR SHALL CONTACT RESPECTIVE UTILITY COMPANIES PRIOR TO DEMOLITION TO COORDINATE DISCONNECTION AND REMOVAL OF EXISTING UTILITIES WITHIN THE AREA OF WORK.

6. THE CONTRACTOR SHALL BE SOLELY RESPONSIBLE FOR ANY DAMAGE TO EXISTING UTILITIES THAT ARE INTENDED TO CONTINUE TO PROVIDE SERVICE WHETHER THESE UTILITIES ARE SHOWN ON THE PLAN OR NOT.

7. UPON DISCOVERY OF ANY UNDERGROUND TANKS, CONTRACTOR SHALL IMMEDIATELY NOTIFY THE OWNER'S REPRESENTATIVE. NO REMOVAL OF TANKS SHALL OCCUR UNTIL AUTHORIZED BY OWNER.

8. BUILDING AND APPURTENANCES DESIGNATED FOR DEMOLITION SHALL NOT BE DISTURBED BY THE CONTRACTOR UNTIL HE HAS FURNISHED WITH NOTICE TO PROCEED BY THE OWNER. AS SOON AS SUCH NOTICE HAS BEEN GIVEN, THE CONTRACTOR SHALL PERFORM THE DEMOLITION, UNDER THE DIRECTION OF THE OWNER'S REPRESENTATIVE.

9. ALL EXISTING UTILITIES WITHIN THE EXISTING BUILDING ARE TO BE REMOVED, WHERE CONFLICTS OCCUR WITH GRADE, BEAMS, PILES, PROPOSED UTILITIES AND TRENCH BACKFILLED AND COMPACTED IN ACCORDANCE WITH THE SPECIFICATIONS AND GEOTECHNICAL REPORT.

10. FOUNDATIONS, FLOORS, FLOOR SLABS, AND ANY OTHER UNDERGROUND BUILDING STRUCTURES SHALL BE REMOVED IN ACCORDANCE WITH THE SPECIFICATIONS. AREAS OF STRUCTURE REMOVAL SHALL BE BACKFILLED IN ACCORDANCE WITH SPECIFICATIONS AND THE GEOTECHNICAL REPORT.

11. DEBRIS SHALL NOT BE BURIED ON THE SUBJECT SITE. ALL UNSUITABLE MATERIAL AND DEBRIS SHALL BE REMOVED FROM THE SITE AND DISPOSED OF IN ACCORDANCE WITH ALL CITY, STATE, AND FEDERAL LAWS AND ORDINANCES.

12. ALL MATERIAL, EXCEPT THAT BELONGING TO A PUBLIC UTILITY COMPANY OR DENOTED FOR SALVAGE, SHALL BECOME PROPERTY OF THE CONTRACTOR. THE CONTRACTOR SHALL NOTIFY THE OWNER OF WATER, ELECTRIC, OR GAS METERS WHEN THE METERS ARE READY FOR REMOVAL, AND THE CONTRACTOR SHALL BE RESPONSIBLE FOR DISCONNECTING ALL UTILITIES IN COMPLIANCE WITH LOCAL REQUIREMENTS. DISCONNECT TRANSFORMERS AS REQUIRED FOR BUILDING DEMOLITION.

13. AS SOON AS DEMOLITION WORK HAS BEEN COMPLETED, THE FINAL GRADE OF BACKFILL IN DEMOLITION AREAS SHALL BE COMPACTED PER THE GEOTECHNICAL REPORT TO PRESENT A NEAT, WELL DRAINED APPEARANCE, AND TO PREVENT WATER FROM DRAINING UNNECESSARILY ONTO ADJACENT PROPERTIES. CONTRACTOR SHALL GRADE SITE TO EXISTING STORM DRAINAGE SYSTEM TO REMAIN ON SITE.

14. EXISTING TREES TO REMAIN SHOULD BE PROTECTED FROM DAMAGE DURING DEMOLITION AND CONSTRUCTION.

15. THE CONTRACTOR IS TO COORDINATE WORK IN THIS PROJECT TO ENSURE ACCESS TO ADJACENT PROPERTIES AT ALL TIMES.

16. THE USE OF EXPLOSIVES SHALL NOT BE PERMITTED.

GreenbergFarrow
COA#:
1430 W. Peachtree St. NW
Suite 200
Atlanta, GA 30309
t: 404 601 4000 f: 404 601 3970

PROJECT TEAM

COPYRIGHT NOTICE
This drawing is the property of the above referenced Professional and is not to be used for any purpose other than the specific project and site named herein, and cannot be reproduced in any manner without the express written permission from the Professional

ISSUE/REVISION RECORD

DATE	DESCRIPTION
10–20–15	SITE PLAN
12–02–15	DP SUBMITTAL
02–03–16	NCDOT RESUBMITTAL
02–03–16	COW SITE RESUBMITTAL

NORTH CAROLINA PROFESSIONAL SEAL ENGINEER JOHN H. NOURZAD
2/3/16

PROFESSIONAL IN CHARGE
JOHN NOURZAD
PROFESSIONAL ENGINEER
LICENSE NO. 023207

PROJECT MANAGER
LARRY DIEHL

QUALITY CONTROL
FEDERICO OLIVARES, PE

DRAWN BY
RYAN SCOTT, EIT

PROJECT NAME

CIRCLE K CAROLINA BEACH

WILMINGTON
NORTH CAROLINA
3739 CAROLINA BEACH RD
WILMINGTON, NC

PROJECT NUMBER
20151091

SHEET TITLE

DEMOLITION PLAN

SHEET NUMBER

C-1.1

NOT ISSUED FOR CONSTRUCTION

NOTES:

1. PRIOR TO ANY CLEARING, GRADING OR CONSTRUCTION ACTIVITY, TREE PROTECTION FENCING SHALL BE INSTALLED AROUND PROTECTED TREES OR GROVES OF TREES. NO CONSTRUCTION WORKERS, TOOLS, MATERIALS, OR VEHICLES ARE PERMITTED WITHIN THE TREE PROTECTION FENCING.
2. ANY TREES AND/OR AREAS DESIGNATED TO BE PROTECTED MUST BE PROPERLY BARRICADED WITH FENCING AND PROTECTED THROUGHOUT CONSTRUCTION TO INSURE THAT NO CLEARING, GRADING OR STAGING OF MATERIALS WILL OCCUR IN THOSE AREAS.
3. NO EQUIPMENT IS ALLOWED ON SITE UNTIL ALL TREE PROTECTION FENCING AND SILT FENCING IS INSTALLED AND APPROVED. PROTECTIVE FENCING IS TO BE MAINTAINED THROUGHOUT THE DURATION OF THE PROJECT, AND CONTRACTORS SHALL RECEIVE ADEQUATE INSTRUCTION ON TREE PROTECTION METHODS.
4. ALL PAVEMENT MARKINGS IN PUBLIC RIGHTS-OF-WAY AND FOR DRIVEWAYS ARE TO BE THERMOPLASTIC AND MEET CITY AND/OR NCDOT STANDARDS.
5. ONCE STREETS ARE OPEN TO TRAFFIC, CONTACT TRAFFIC ENGINEERING REGARDING THE INSTALLATION OF TRAFFIC AND STREET NAME SIGNS. PROPOSED STREET NAMES MUST BE APPROVED PRIOR TO INSTALLATION OF STREET NAME SIGNS.
6. TRAFFIC CONTROL DEVICES (INCLUDING SIGNS AND PAVEMENT MARKINGS) IN AREAS OPEN TO PUBLIC TRAFFIC ARE TO MEET MUTCD (MANUAL ON UNIFORM TRAFFIC CONTROL DEVICES) STANDARDS.
7. CONTACT TRAFFIC ENGINEERING AT 910-341-7888 TO ENSURE THAT ALL TRAFFIC SIGNAL FACILITIES AND EQUIPMENT ARE SHOWN ON THE PLAN.
8. CALL TRAFFIC ENGINEERING AT 910-341-7888 FORTY-EIGHT (48) HOURS PRIOR TO ANY EXCAVATION IN THE RIGHT-OF-WAY.
9. TRAFFIC ENGINEERING MUST APPROVE OF PAVEMENT MARKING PRIOR TO ACTUAL STRIPING.
10. ALL PARKING STALL MARKINGS AND LANE ARROWS WITHIN THE PARKING AREAS SHALL BE WHITE.
11. ALL TRAFFIC CONTROL SIGNS AND MARKINGS OFF THE RIGHT-OF-WAY ARE TO BE MAINTAINED BY THE PROPERTY OWNER IN ACCORDANCE WITH MUTCD STANDARDS.
12. STOP SIGNS AND STREET SIGNS TO REMAIN IN PLACE DURING CONSTRUCTION.
13. TACTILE WARNING MATS WILL BE INSTALLED ON ALL WHEELCHAIR RAMPS.
14. A UTILITY CUT PERMIT IS REQUIRED FOR EACH OPEN CUT OF A CITY STREET.
15. ANY BROKEN OR MISSING SIDEWALK PANELS, DRIVEWAY PANELS AND CURBING WILL BE REPLACED.
16. CONTACT FRAFFIC ENGINEERING AT (910)341-7888 TO DISCUSS STREET LIGHTING OPTIONS.
17. WATER AND SEWER SERVICE SHALL MEET CAPE FEAR PUBLIC UTILITY AUTHORITY (CFPUA) DETAILS AND SPECIFICATIONS.
18, PROJECT SHALL COMPLY WITH CFPUA CROSS CONNECTION CONTROL REQUIREMENTS. WATER METER(S) CANNOT BE RELEASED UNTIL ALL REQUIREMENTS ARE MET AND THE STATE HAS GIVEN THEIR FINAL APPROVAL. CALL 910-343-3910 FOR INFORMATION.
19. IF THE CONTRACTOR DESIRES CFPUA WATER FOR CONSTRUCTION, HE SHALL APPLY IN ADVANCE FOR THIS SERVICE AND MUST PROVIDE A REDUCED PRESSURE ZONE (RPZ) BACKFLOW PREVENTION DEVICE ON THE DEVELOPER'S SIDE OF THE WATER METER BOX.
20. ANY IRRIGATION SYSTEM SUPPLIED BY CFPUA WATER SHALL COMPLY WITH THE CFPUA CROSS CONNECTION CONTROL REGULATIONS. CALL 919-343-3910 FOR INFORMATION.
21. ANY IRRIGATION SYSTEM SHALL BE EQUIPPED WITH A RAIN AND FREEZER SENSOR.
22. ANY BACKFLOW PREVENTION DEVICES REQUIRED BY THE CFPUA WILL NEED TO BE ON THE LIST OF APPROVED DEVICES BY USCFCCCHR OR ASSE.
23. CONTRACTOR TO FIELD VERIFY EXISTING WATER AND SEWER SERVICE LOCATIONS, SIZES AND MATERIALS PRIOR TO CONSTRUCTION. ENGINEER TO BE NOTIFIED OF ANY CONFLICTS.
24. CONTRACTOR SHALL MAINTAIN ALL-WEATHER ACCESS FOR EMERGENCY VEHICLES AT ALL TIMES DURING CONSTRUCTION.
25. UNDERGROUND FIRE LINE(S) MUST BE PERMITTED AND INSPECTED BY THE WILMINGTON FIRE DEPARTMENT FROM THE PUBLIC RIGHT-OF-WAY TO THE BUILDING. CONTACT THE WILMINGTON FIRE DEPARTMENT DIVISION OF FIRE AND LIFE SAFETY AT 910-341-0696.
26. NO OBSTRUCTIONS ARE PERMITTED IN THE SPACE BETWEEN THIRTY (30) INCHES AND TEN (10) FEET ABOVE THE GROUND WITHIN THE TRIANGULAR SIGHT DISTANCE.
27. CONTACT THE NORTH CAROLINA ONE CALL CENTER AT 1-800-632-4949 PRIOR TO DOING ANY DIGGING, CLEARING, OR GRADING

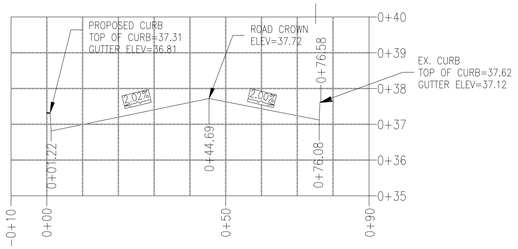

CROSS SECTION B-B
VERTICAL SCALE: 1"=3'
HORIZONTAL SCALE: 1"=30'

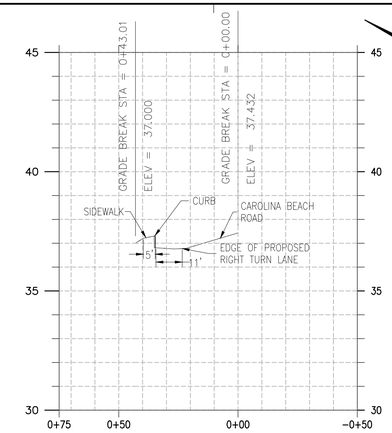

CROSS SECTION A-A
VERTICAL SCALE: 1"=3'
HORIZONTAL SCALE: 1"=30'

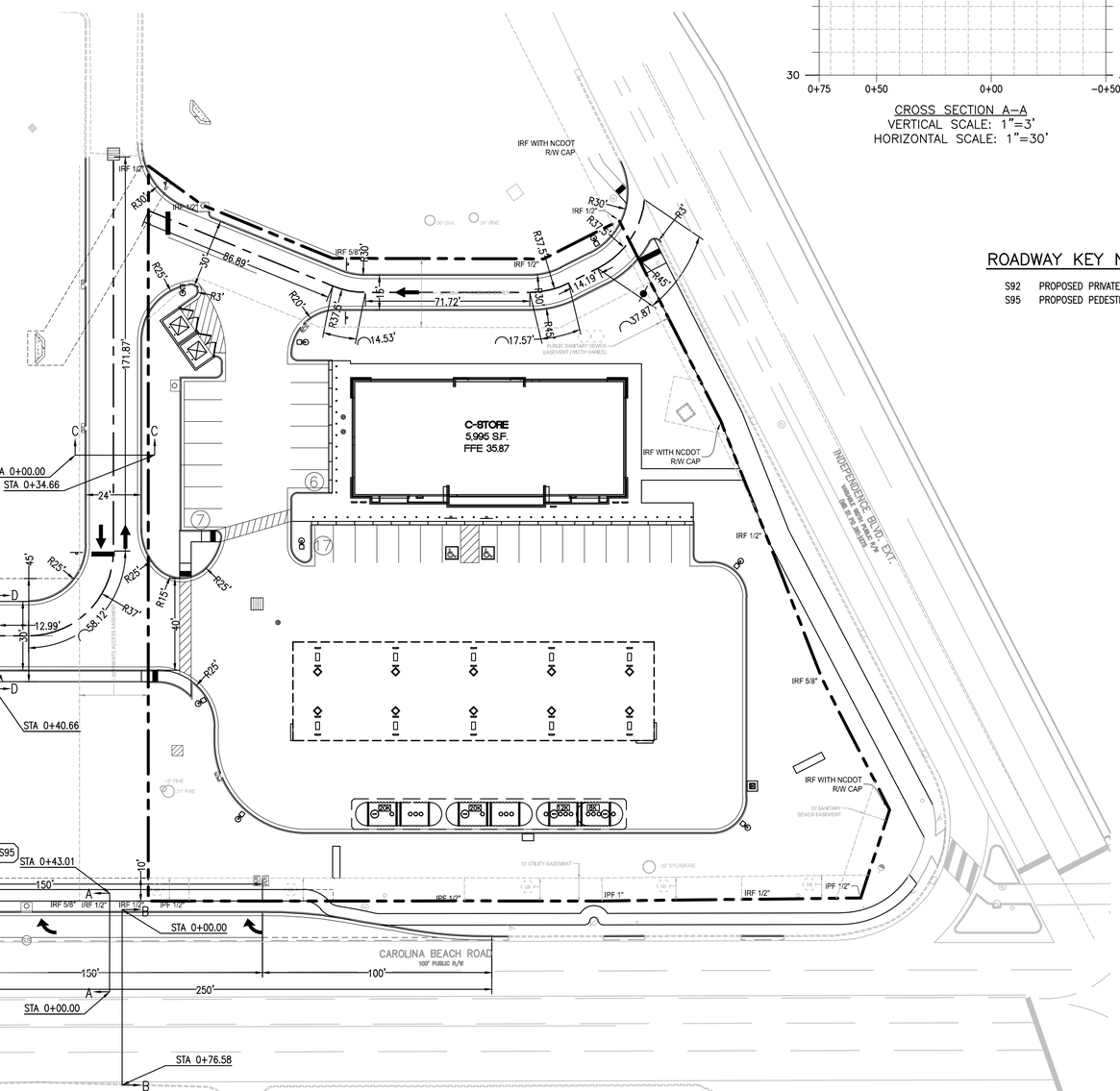

ROADWAY KEY NOTES

S92	PROPOSED PRIVATE ACCESS EASEMENT
S95	PROPOSED PEDESTRIAN ACCESS EASEMENT

GRAPHIC SCALE

30 0 15 30 60 120

(IN FEET)
1 inch = 30 ft.

EXISTING LEGEND:

- INDEX CONTOUR
- INTERMEDIATE CONTOUR
- EDGE OF PAVEMENT
- CURB AND GUTTER
- PROPERTY LINE
- ADJOINER PROPERTY LINE (NOT SURVEYED)
- SWALE / DITCH LINE
- SANITARY SEWER
- STORM SEWER
- OVERHEAD ELECTRIC
- UNDERGROUND COMMUNICATION SERVICE
- UNDERGROUND GAS SERVICE
- UNDERGROUND ELECTRIC SERVICE
- WATER
- IRON REBAR FOUND
- IRON PIPE FOUND
- PLAT / FIELD
- UTILITY POLE
- GUY ANCHOR WIRE
- SIGN
- CURB DRAIN INLET (CDI)/DRAIN INLET (DI)
- STORM DRAIN MANHOLE (SDMH)
- SANITARY SEWER MANHOLE (SMH)
- WATER VALVE & BACK PREVENTER VALVE
- WATER METER
- FIRE HYDRANT (HYD.)
- TREE TRUNK
- CONCRETE
- END SECTIONS

PROPOSED LEGEND:

- PROPERTY LINE
- PROPOSED CURB & GUTTER
- PROPOSED STAMPED BRICK CONCRETE
- PROPOSED FIRELANE
- MOUNTABLE CURB W/ CONCRETE STAMPED BRICK PATTERN
- MULTIPLE PRODUCT DISPENSER WITH CANOPY COLUMNS AND BOLLARDS
- PROPOSED SITE LIGHT, SEE PHOTOMETRIC PLAN
- PROPOSED DRAINAGE STRUCTURES (SEE GRADING/DRAINAGE PLANS)
- PROPOSED PARKING SPACES

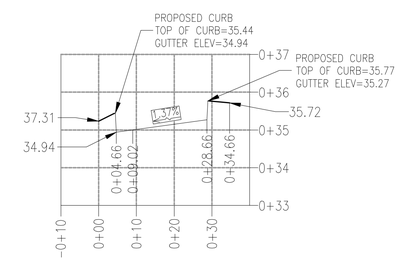

CROSS SECTION C-C
VERTICAL SCALE: 1"=3'
HORIZONTAL SCALE: 1"=30'

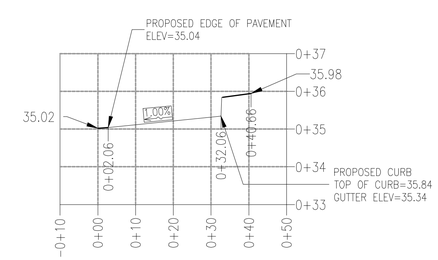

CROSS SECTION D-D
VERTICAL SCALE: 1"=3'
HORIZONTAL SCALE: 1"=30'

Approved Construction Plan

	Name	Date
Planning		
Traffic		
Fire		

CITY OF WILMINGTON NORTH CAROLINA
Public Services Engineering Division
APPROVED STORMWATER MANAGEMENT PLAN
Date: _____ Permit #_____
Signed: _____

GreenbergFarrow
COA#:
5500 Democracy Drive, Suite 125
Plano, TX 75024
t: 972 362 6118

PROJECT TEAM

COPYRIGHT NOTICE
This drawing is the property of the above referenced Professional and is not to be used for any purpose other than the specific project and site named herein, and cannot be reproduced in any manner without the express written permission from the Professional

ISSUE/REVISION RECORD

DATE	DESCRIPTION
10-20-15	SITE PLAN
12-02-15	DP SUBMITTAL
02-03-16	NCDOT RESUBMITTAL
02-03-16	COW SITE RESUBMITTAL

NORTH CAROLINA PROFESSIONAL SEAL ENGINEER JOHN H. NOURZAD
2/3/16

PROFESSIONAL IN CHARGE
JOHN NOURZAD
PROFESSIONAL ENGINEER
LICENSE NO. 023207

PROJECT MANAGER
LARRY DIEHL

QUALITY CONTROL
FEDERICO OLIVARES, PE

DRAWN BY
RYAN SCOTT, EIT

PROJECT NAME

CIRCLE K CAROLINA BEACH

WILMINGTON NORTH CAROLINA

3739 CAROLINA BEACH RD WILMINGTON, NC

PROJECT NUMBER
20151091

SHEET TITLE
ROAD PLAN

SHEET NUMBER
C-1.2

NOT ISSUED FOR CONSTRUCTION

NOTE:
CONTACTOR SHALL MILL OUT DEPTH OF THE SURFACE MIX 2' FROM THE EXISTING EDGE OF PAVEMENT INTO THE ADJACENT TRAVEL LANE, PRIOR TO REPAVING, TO ENSURE A CLEAN TIE-IN FOR THE LENGTH OF THE ADDED RIGHT TURN LANE.

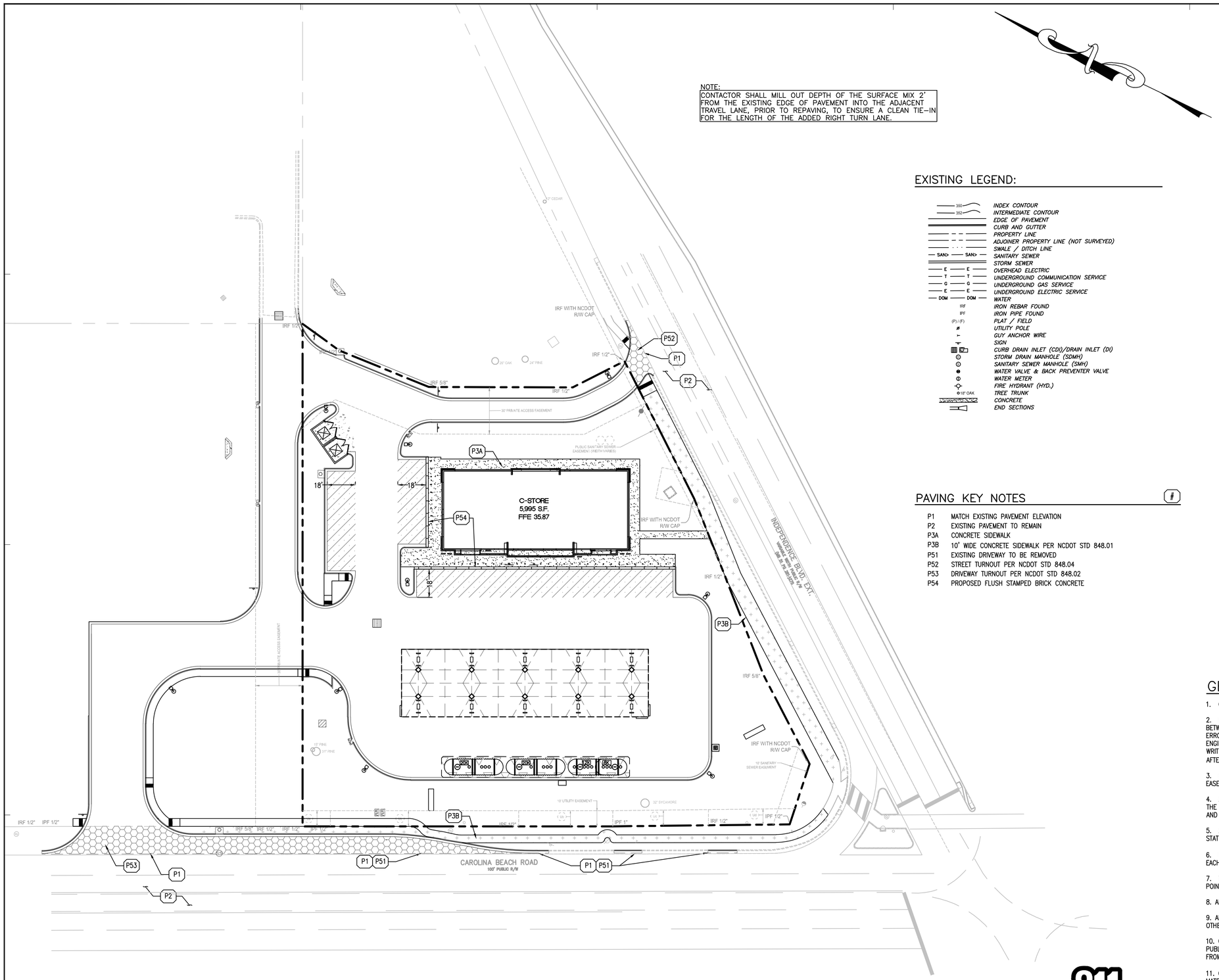

EXISTING LEGEND:

- INDEX CONTOUR
- INTERMEDIATE CONTOUR
- EDGE OF PAVEMENT
- CURB AND GUTTER
- PROPERTY LINE
- ADJOINER PROPERTY LINE (NOT SURVEYED)
- SWALE / DITCH LINE
- SANITARY SEWER
- STORM SEWER
- OVERHEAD ELECTRIC
- UNDERGROUND COMMUNICATION SERVICE
- UNDERGROUND GAS SERVICE
- UNDERGROUND ELECTRIC SERVICE
- WATER
- IRF — IRON REBAR FOUND
- IPF — IRON PIPE FOUND
- (P) / (F) — PLAT / FIELD
- UTILITY POLE
- GUY ANCHOR WIRE
- SIGN
- CURB DRAIN INLET (CDI)/DRAIN INLET (DI)
- STORM DRAIN MANHOLE (SDMH)
- SANITARY SEWER MANHOLE (SMH)
- WATER VALVE & BACK PREVENTER VALVE
- WATER METER
- FIRE HYDRANT (HYD.)
- 12" OAK — TREE TRUNK
- CONCRETE
- END SECTIONS

PAVING KEY NOTES

P1	MATCH EXISTING PAVEMENT ELEVATION
P2	EXISTING PAVEMENT TO REMAIN
P3A	CONCRETE SIDEWALK
P3B	10' WIDE CONCRETE SIDEWALK PER NCDOT STD 848.01
P51	EXISTING DRIVEWAY TO BE REMOVED
P52	STREET TURNOUT PER NCDOT STD 848.04
P53	DRIVEWAY TURNOUT PER NCDOT STD 848.02
P54	PROPOSED FLUSH STAMPED BRICK CONCRETE

GRAPHIC SCALE

30 0 15 30 60 120

(IN FEET)
1 inch = 30 ft.

PROPOSED LEGEND:

- PROPERTY LINE
- PROPOSED CURB & GUTTER
- PROPOSED DRAINAGE STRUCTURES (SEE GRADING/DRAINAGE PLANS)
- EJ — EXPANSION JOINT
- KCJ — CONSTRUCTION JOINT
- CJ — CONTROL JOINT
- 2-4" PVC SEEVE
- PROPOSED ASPHALT PAVEMENT PER CITY OF WILMINGTON STD SD1-04
- PROPOSED HEAVY DUTY CONCRETE PAVING
- CONCRETE PAVING OVER UST TANKS. SEE FUELING PLANS FOR DETAILS
- PROPOSED CONCRETE SIDEWALK
- PROPOSED CONCRETE SIDEWALK PER NCDOT DETAIL
- PROPOSED CONCRETE DRIVEWAY PER NCDOT STD 700.05
- PROPOSED POROUS CONCRETE

GENERAL PAVING NOTES:

1. CONTRACTOR MUST SECURE ALL NECESSARY PERMITS PRIOR TO STARTING WORK.

2. IF THE CONTRACTOR, IN THE COURSE OF THE WORK, FINDS ANY DISCREPANCIES BETWEEN THE PLANS AND THE PHYSICAL CONDITIONS OF THE LOCALITY, OR ANY ERRORS OR OMISSIONS IN THE PLANS OR IN THE LAYOUT AS GIVEN BY THE ENGINEER, IT SHALL BE HIS DUTY TO IMMEDIATELY INFORM THE ENGINEER, IN WRITING, AND THE ENGINEER WILL PROMPTLY VERIFY THE SAME. ANY WORK DONE AFTER SUCH A DISCOVERY, UNTIL AUTHORIZED, WILL BE AT THE CONTRACTOR'S RISK.

3. CONTRACTOR SHALL BE RESPONSIBLE FOR VERIFICATION OF ALL SETBACKS, EASEMENTS, AND DIMENSIONS SHOWN HEREON BEFORE BEGINNING CONSTRUCTION.

4. ALL CONSTRUCTION MATERIALS AND WORKMANSHIP SHALL BE IN ACCORDANCE TO THE STATE AND LOCAL GOVERNMENT AGENCY LATEST CONSTRUCTION SPECIFICATIONS AND DETAILS.

5. ALL HANDICAP SITE FEATURES SHALL BE CONSTRUCTED TO MEET ALL FEDERAL, STATE AND LOCAL CODE.

6. NOTIFY THE COUNTY INSPECTOR TWENTY-FOUR (24) HOURS BEFORE BEGINNING EACH PHASE OF CONSTRUCTION.

7. THE CONTRACTOR SHALL CAREFULLY PRESERVE BENCHMARKS, REFERENCE POINTS, AND STAKES.

8. ARCHITECTURAL PLANS ARE TO BE USED FOR BUILDING STAKE OUT.

9. ALL DIMENSIONS ARE FROM FACE OF BUILDING, CURB, AND WALL UNLESS OTHERWISE SPECIFIED ON PLANS.

10. CONTRACTOR SHALL MAINTAIN THE SITE IN A MANNER SO THAT WORKMEN AND PUBLIC SHALL BE PROTECTED FROM INJURY, AND ADJOINING PROPERTY PROTECTED FROM DAMAGE.

11. CONTRACTOR IS RESPONSIBLE FOR DAMAGE TO ANY EXISTING ITEM AND/OR MATERIAL INSIDE OR OUTSIDE CONTRACT LIMITS DUE TO CONSTRUCTION OPERATION.

12. ALL STREET SURFACES, DRIVEWAYS, CULVERTS, CURB AND GUTTERS, ROADSIDE DRAINAGE DITCHES AND OTHER STRUCTURES THAT ARE DISTURBED OR DAMAGED IN ANY MANNER AS A RESULT OF CONSTRUCTION SHALL BE REPLACED OR REPAIRED IN ACCORDANCE WITH THE SPECIFICATIONS.

13. ALL ROAD WORK SHALL BE PERFORMED IN ACCORDANCE WITH THE STATE AND LOCAL GOVERNMENT AGENCY SPECIFICATIONS.

811 Know what's below. Call before you dig.

Approved Construction Plan

	Name	Date
Planning		
Traffic		
Fire		

CITY OF WILMINGTON NORTH CAROLINA
Public Services Engineering Division
APPROVED STORMWATER MANAGEMENT PLAN
Date: _____ Permit #_____
Signed: _____

GreenbergFarrow
COA#:
1430 W. Peachtree St. NW
Suite 200
Atlanta, GA 30309
t: 404 601 4000 f: 404 601 3970

PROJECT TEAM

COPYRIGHT NOTICE
This drawing is the property of the above referenced Professional and is not to be used for any purpose other than the specific project and site named herein, and cannot be reproduced in any manner without the express written permission from the Professional

ISSUE/REVISION RECORD

DATE	DESCRIPTION
10-20-15	SITE PLAN
12-02-15	DP SUBMITTAL
02-03-16	NCDOT RESUBMITTAL
02-03-16	COW SITE RESUBMITTAL

NORTH CAROLINA PROFESSIONAL ENGINEER SEAL JOHN H. NOURZAD
2/3/16

PROFESSIONAL IN CHARGE
JOHN NOURZAD
PROFESSIONAL ENGINEER
LICENSE NO. 023207

PROJECT MANAGER
LARRY DIEHL

QUALITY CONTROL
FEDERICO OLIVARES, PE

DRAWN BY
RYAN SCOTT, EIT

PROJECT NAME

CIRCLE K CAROLINA BEACH

WILMINGTON NORTH CAROLINA

3739 CAROLINA BEACH RD WILMINGTON, NC

PROJECT NUMBER
20151091

SHEET TITLE

PAVING PLAN

SHEET NUMBER

C-2.0

NOT ISSUED FOR CONSTRUCTION

Approved Construction Plan

	Name	Date
Planning		
Traffic		
Fire		

CITY OF WILMINGTON NORTH CAROLINA
Public Services Engineering Division
APPROVED STORMWATER MANAGEMENT PLAN
Date: _____ Permit #_____
Signed: _____

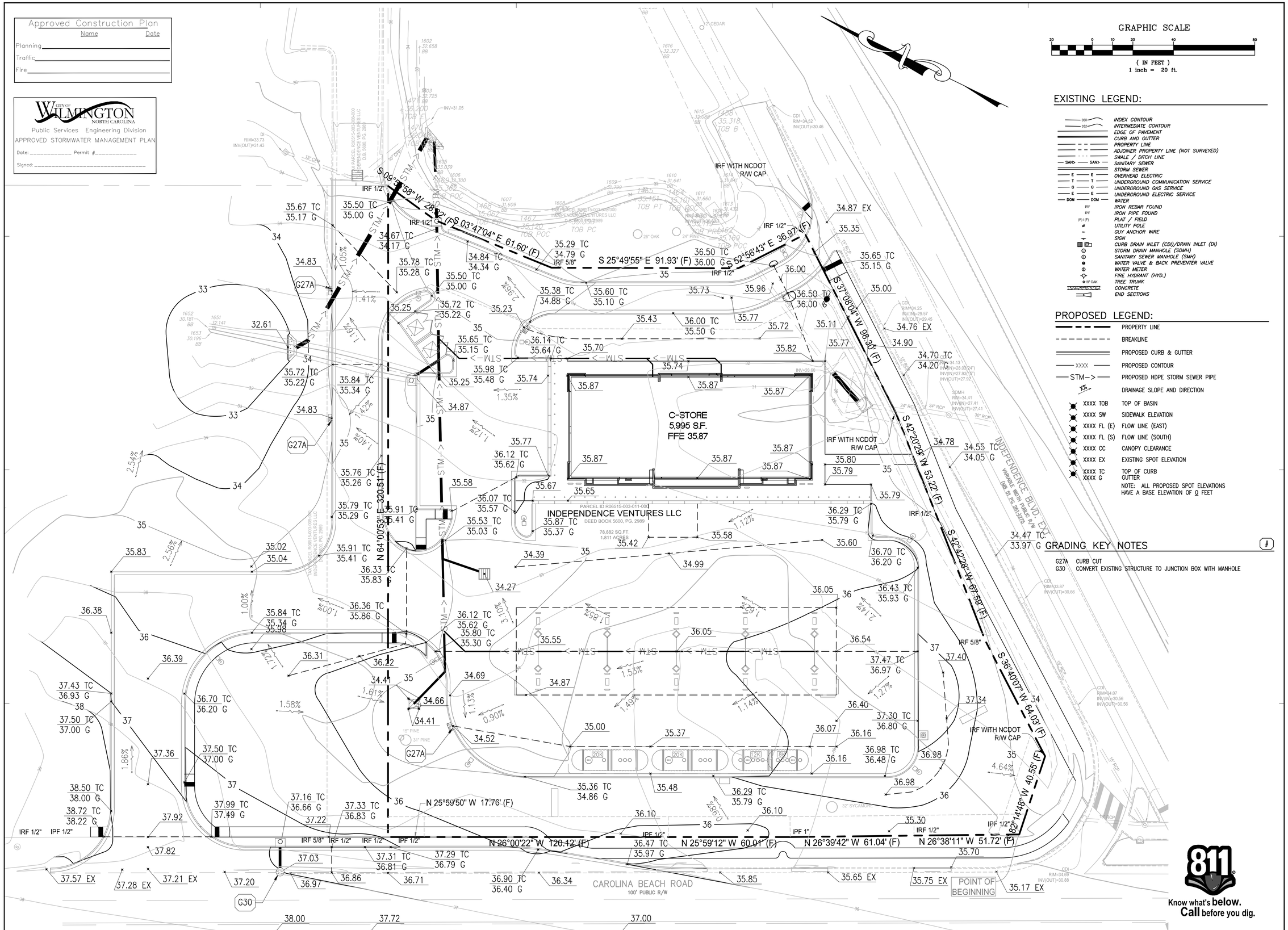

GRAPHIC SCALE

20 0 10 20 40 80

(IN FEET)
1 inch = 20 ft.

EXISTING LEGEND:

- INDEX CONTOUR
- INTERMEDIATE CONTOUR
- EDGE OF PAVEMENT
- CURB AND GUTTER
- PROPERTY LINE
- ADJOINER PROPERTY LINE (NOT SURVEYED)
- SWALE / DITCH LINE
- SANITARY SEWER
- STORM SEWER
- OVERHEAD ELECTRIC
- UNDERGROUND COMMUNICATION SERVICE
- UNDERGROUND GAS SERVICE
- UNDERGROUND ELECTRIC SERVICE
- WATER
- IRF IRON REBAR FOUND
- IPF IRON PIPE FOUND
- (P)/(F) PLAT / FIELD
- UTILITY POLE
- GUY ANCHOR WIRE
- SIGN
- CURB DRAIN INLET (CDI)/DRAIN INLET (DI)
- STORM DRAIN MANHOLE (SDMH)
- SANITARY SEWER MANHOLE (SMH)
- WATER VALVE & BACK PREVENTER VALVE
- WATER METER
- FIRE HYDRANT (HYD.)
- 18" OAK TREE TRUNK
- CONCRETE
- END SECTIONS

PROPOSED LEGEND:

- PROPERTY LINE
- BREAKLINE
- PROPOSED CURB & GUTTER
- XXXX PROPOSED CONTOUR
- STM—> PROPOSED HDPE STORM SEWER PIPE
- 1% DRAINAGE SLOPE AND DIRECTION
- XXXX TOB TOP OF BASIN
- XXXX SW SIDEWALK ELEVATION
- XXXX FL (E) FLOW LINE (EAST)
- XXXX FL (S) FLOW LINE (SOUTH)
- XXXX CC CANOPY CLEARANCE
- XXXX EX EXISTING SPOT ELEVATION
- XXXX TC TOP OF CURB
  XXXX G GUTTER

NOTE: ALL PROPOSED SPOT ELEVATIONS HAVE A BASE ELEVATION OF 0 FEET

GRADING KEY NOTES

#	
G27A	CURB CUT
G30	CONVERT EXISTING STRUCTURE TO JUNCTION BOX WITH MANHOLE

811 Know what's below. Call before you dig.

GreenbergFarrow
COA#:
1430 W. Peachtree St. NW
Suite 200
Atlanta, GA 30309
t: 404 601 4000 f: 404 601 3970

PROJECT TEAM

COPYRIGHT NOTICE
This drawing is the property of the above referenced Professional and is not to be used for any purpose other than the specific project and site named herein, and cannot be reproduced in any manner without the express written permission from the Professional

ISSUE/REVISION RECORD

DATE	DESCRIPTION
10–20–15	SITE PLAN
12–02–15	DP SUBMITTAL
02–03–16	NCDOT RESUBMITTAL
02–03–16	COW SITE RESUBMITTAL

NORTH CAROLINA PROFESSIONAL SEAL ENGINEER JOHN H. NOURZAD
2/3/16

PROFESSIONAL IN CHARGE
JOHN NOURZAD
PROFESSIONAL ENGINEER
LICENSE NO. 023207
PROJECT MANAGER
LARRY DIEHL
QUALITY CONTROL
FEDERICO OLIVARES, PE
DRAWN BY
RYAN SCOTT, EIT

PROJECT NAME

CIRCLE K CAROLINA BEACH

WILMINGTON
NORTH CAROLINA
3739 CAROLINA BEACH RD
WILMINGTON, NC

PROJECT NUMBER
20151091

SHEET TITLE
GRADING PLAN

SHEET NUMBER
C-3.0

NOT ISSUED FOR CONSTRUCTION

Approved Construction Plan

	Name	Date
Planning		
Traffic		
Fire		

CITY OF WILMINGTON NORTH CAROLINA
Public Services Engineering Division
APPROVED STORMWATER MANAGEMENT PLAN
Date: _____ Permit #_____
Signed: _____

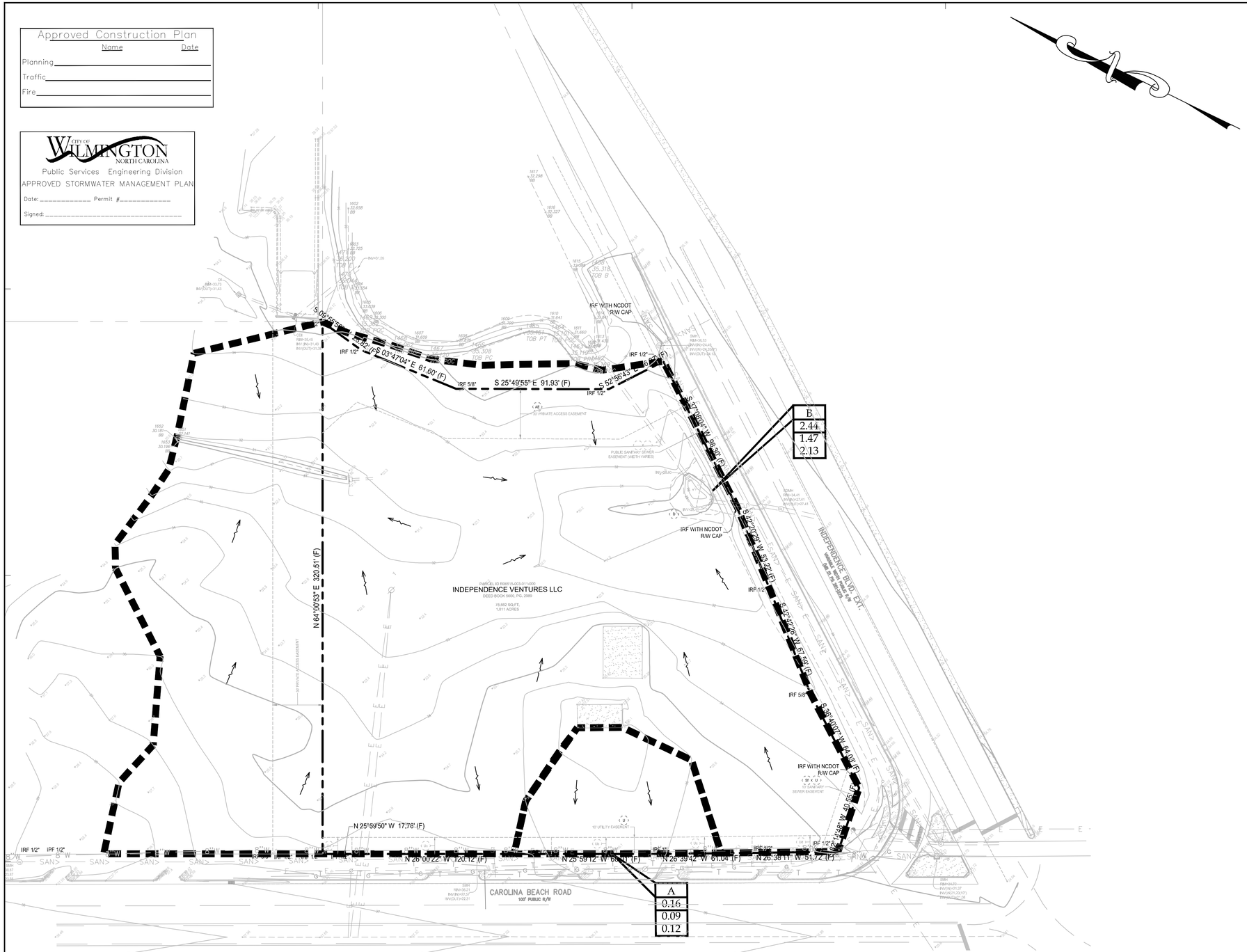

GRAPHIC SCALE

30 0 15 30 60 120

(IN FEET)
1 inch = 30 ft.

EXISTING LEGEND:

- 350 — INDEX CONTOUR
- 352 — INTERMEDIATE CONTOUR
- EDGE OF PAVEMENT
- CURB AND GUTTER
- PROPERTY LINE
- ADJOINER PROPERTY LINE (NOT SURVEYED)
- SWALE / DITCH LINE
- SAN> — SANITARY SEWER
- STORM SEWER
- E — OVERHEAD ELECTRIC
- T — UNDERGROUND COMMUNICATION SERVICE
- G — UNDERGROUND GAS SERVICE
- E — UNDERGROUND ELECTRIC SERVICE
- DOM — WATER
- IRF — IRON REBAR FOUND
- IPF — IRON PIPE FOUND
- (P) / (F) — PLAT / FIELD
- UTILITY POLE
- GUY ANCHOR WIRE
- SIGN
- CURB DRAIN INLET (CDI)/DRAIN INLET (DI)
- STORM DRAIN MANHOLE (SDMH)
- SANITARY SEWER MANHOLE (SMH)
- WATER VALVE & BACK PREVENTER VALVE
- WATER METER
- FIRE HYDRANT (HYD.)
- 18" OAK — TREE TRUNK
- CONCRETE
- END SECTIONS

PROPOSED LEGEND:

- PROPERTY LINE
- EXISTING CURB & GUTTER
- XX — EXISTING CONTOUR
- STM—> — EXISTING HDPE STORM PIPE.
- DRAINAGE SLOPE AND DIRECTION
- DRAINAGE BASIN BOUNDARY
- A — DRAINAGE BASIN ID
- 1.90 — DRAINAGE BASIN AREA (ACRE)
- 0.09 — 10-YR STORMWATER RUNOFF
- 0.13 — 50-YR STORMWATER RUNOFF

NOTE:

SITE SOIL:

SAND-TRACE CLAY AND SILT (COASTAL PLAIN)(SM)	0'-1' DEEP
VERY LOOSE (SP-SM)	1'-2' DEEP
LOOSE/FIRM (SP)	2'-5' DEEP

EXISTING CIRCLE K DRAINAGE BASIN SUMMARY

BASIN ID	OVERALL AREA (ac)	Tc (min)	10-YR STORM C	10-YR STORM I (in/hr)	10-YR STORM Q (cfs)	50-YR STORM C	50-YR STORM I (in/hr)	50-YR STORM Q (cfs)	REMARKS
A	0.16	19.3	0.20	2.92	0.09	0.20	3.8	0.12	SHEET FLOWS INTO SOUTH INTO CAROLINA BEACH ROAD AND FLOWS THE GUTTER EAST
GRASS	0.16		0.2			0.20			
PAVED	0		0.00			0.00			
B	2.44	67.64	0.23	2.92	1.47	0.23	3.8	2.13	SHEET FLOWS EAST INTO HEADWALL WHICH FOLLOWS UNDER INDEPENDENCE BLVD AND DISCHARGS INTO AN EXISTING DETENTION POND TO SOUTHEAST
GRASS	2.44		0.23			0.23			
PAVED	0		0.00			0.00			
TOTAL	2.60				1.56			2.25	

811 Know what's below. Call before you dig.

GreenbergFarrow
COA#:
1430 W. Peachtree St. NW
Suite 200
Atlanta, GA 30309
t: 404 601 4000 f: 404 601 3970

PROJECT TEAM

COPYRIGHT NOTICE
This drawing is the property of the above referenced Professional and is not to be used for any purpose other than the specific project and site named herein, and cannot be reproduced in any manner without the express written permission from the Professional

ISSUE/REVISION RECORD

DATE	DESCRIPTION
10-20-15	SITE PLAN
12-02-15	DP SUBMITTAL
02-03-16	NCDOT RESUBMITTAL
02-03-16	COW SITE RESUBMITTAL

NORTH CAROLINA PROFESSIONAL ENGINEER SEAL JOHN H. NOURZAD
2/3/16

PROFESSIONAL IN CHARGE
JOHN NOURZAD
PROFESSIONAL ENGINEER
LICENSE NO. 023207

PROJECT MANAGER
LARRY DIEHL

QUALITY CONTROL
FEDERICO OLIVARES, PE

DRAWN BY
RYAN SCOTT, EIT

PROJECT NAME
CIRCLE K CAROLINA BEACH

WILMINGTON NORTH CAROLINA
3739 CAROLINA BEACH RD WILMINGTON, NC

PROJECT NUMBER
20151091

SHEET TITLE
PRE-DRAINAGE PLAN

SHEET NUMBER
C-4.0

NOT ISSUED FOR CONSTRUCTION

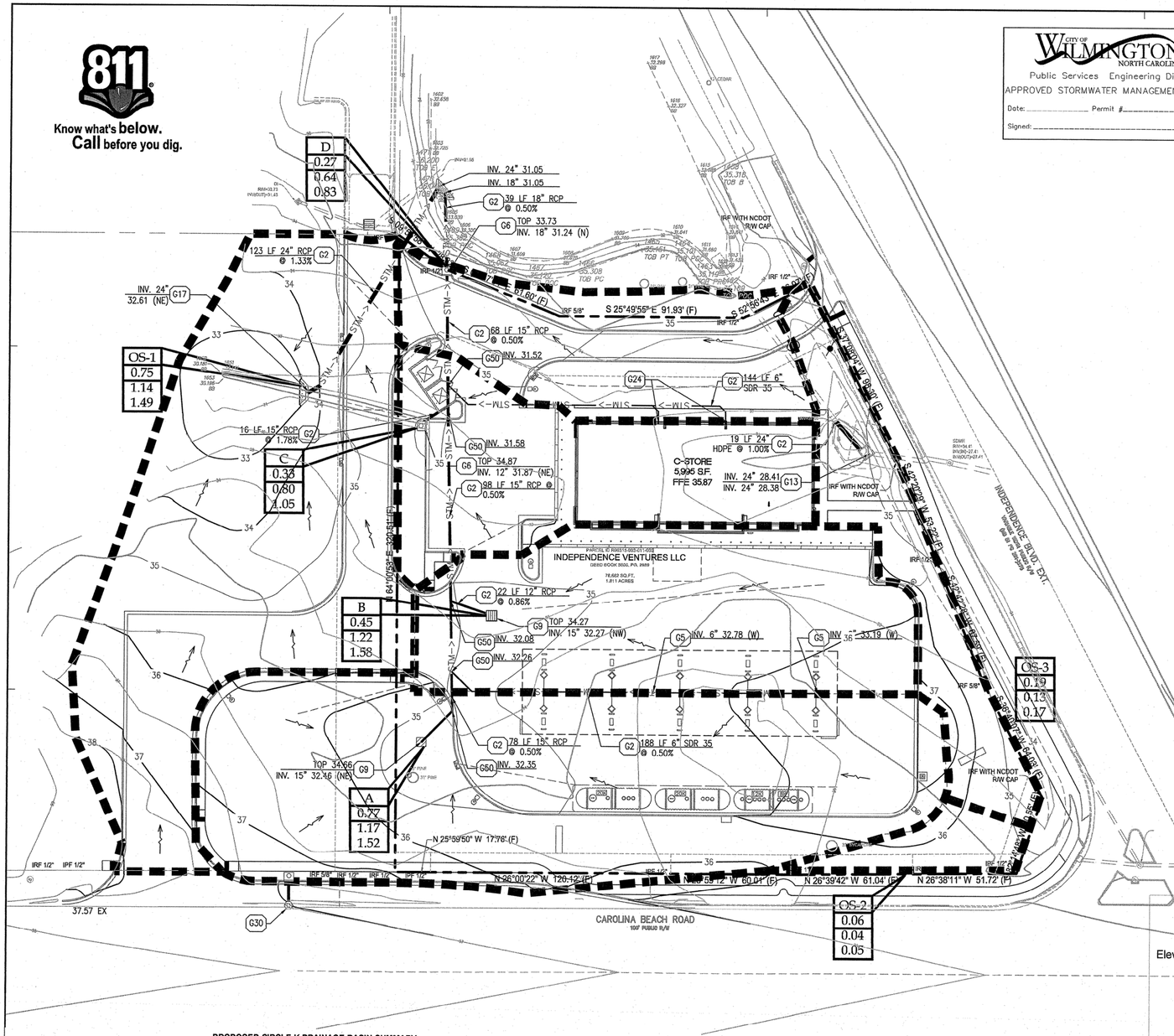

CITY OF WILMINGTON NORTH CAROLINA
Public Services Engineering Division
APPROVED STORMWATER MANAGEMENT PLAN
Date: _____ Permit #_____
Signed: _____

Approved Construction Plan

	Name	Date
Planning		
Traffic		
Fire		

GRAPHIC SCALE

30 0 15 30 60 120

(IN FEET)
1 inch = 30 ft.

PROPOSED LEGEND:

- PROPERTY LINE
- PROPOSED CURB & GUTTER
- XXXX — PROPOSED CONTOUR
- STM-> — PROPOSED HDPE STORM PIPE.
- X% — DRAINAGE SLOPE AND DIRECTION
- DRAINAGE BASIN BOUNDARY
- A — DRAINAGE BASIN ID
- 1.90 — DRAINAGE BASIN AREA (ACRE)
- 4.08 — 10-YR STORMWATER RUNOFF
- 6.76 — 50-YR STORMWATER RUNOFF

EXISTING LEGEND:

- 355 — INDEX CONTOUR
- 352 — INTERMEDIATE CONTOUR
- EDGE OF PAVEMENT
- CURB AND GUTTER
- PROPERTY LINE
- ADJOINER PROPERTY LINE (NOT SURVEYED)
- SWALE / DITCH LINE
- SAN> — SAN> — SANITARY SEWER
- STORM SEWER
- E — E — OVERHEAD ELECTRIC
- T — T — UNDERGROUND COMMUNICATION SERVICE
- G — G — UNDERGROUND GAS SERVICE
- E — E — UNDERGROUND ELECTRIC SERVICE
- DOM — DOM — WATER
- IRF — IRON REBAR FOUND
- IPF — IRON PIPE FOUND
- (P) (F) — PLAT / FIELD
- UTILITY POLE
- GUY ANCHOR WIRE
- SIGN
- CURB DRAIN INLET (CDI)/DRAIN INLET (DI)
- STORM DRAIN MANHOLE (SDMH)
- SANITARY SEWER MANHOLE (SMH)
- WATER VALVE & BACK PREVENTER VALVE
- WATER METER
- FIRE HYDRANT (HYD.)
- 018" OAK — TREE TRUNK
- CONCRETE
- END SECTIONS

GRADING KEY NOTES

#	
G2	STORM SEWER (SEE NOTE FOR TYPE, SIZE AND SLOPE)
G5	STORM SEWER CLEAN-OUT
G6	CURB INLET (PER NCDOT 840.02)
G9	GRATE INLET. (PER NCDOT 840.14)
G13	JUNCTION BOX (PER NCDOT 840.31)
G17	CONCRETE HEADWALL
G24	CONNECT DOWN SPOUTS UNDERGROUND TO STORM PIPE (SEE NOTE FOR NUMBER AND SIZE)
G30	CONVERT EXISTING STRUCTURE TO JUNCTION BOX (NCDOT 840.31)
G50	WYE CONNECTION

ACCUMLATED PIPE SIZING CACULATIONS

DRAINAGE AREA	PIPE SIZE PROVIDED	PIPE SIZE REQ. (IN)	Q (cfs) 100 YR	n	√(SLOPE)
A	15"	8.86	1.69	0.012	0.09798
B	15"	11.52	3.47	0.012	0.1
C	15"	12.58	4.64	0.012	0.10583
D	18"	13.50	5.56	0.012	0.104881
OS-1	24"	12.54	6.42	0.012	0.147648
OS-2	N/A	N/A	0.05	N/A	N/A
OS-3	N/A	N/A	0.17	N/A	N/A

CALCUATIONS PER WILMINGTON NC TECHNIAL STANDARDS CH. S.F.2 EQUATION

PROPOSED CIRCLE K DRAINAGE BASIN SUMMARY

BASIN ID	OVERALL AREA (ac)	Tc (min)	10-YR STORM C	10-YR STORM I (in/hr)	10-YR STORM Q (cfs)	50-YR STORM C	50-YR STORM I (in/hr)	50-YR STORM Q (cfs)	REMARKS
A	0.77	8.4	0.52	2.92	1.17	0.52	3.8	1.52	SHEET FLOWS WEST INTO PROPOSED CURB INLET, THEN FLOWS NORTH INTO EXISTING FOREBAY
GRASS	0.463		0.20			0.20			
PAVED	0.307		0.95			0.95			
B	0.45	5	0.94	2.92	1.22	0.94	3.8	1.58	SHEET FLOWS WEST INTO PROPOSED GRATE INLET, THEN FLOWS NORTH INTO EXISTING FOREBAY
GRASS	0.008		0.20			0.20			
PAVED	0.437		0.95			0.95			
C	0.33	5	0.84	2.92	0.80	0.84	3.8	1.05	SHEET FLOWS WEST INTO PROPOSED CURB INLET, THEN FLOWS NORTH INTO EXISTING FOREBAY
GRASS	0.048		0.20			0.20			
PAVED	0.28		0.95			0.95			
D	0.27	5	0.78	2.92	0.61	0.77	3.8	0.79	SHEET FLOWS WEST INTO PROPOSED CURB INLET, THEN FLOWS NORTH INTO EXISTING FOREBAY
GRASS	0.066		0.20			0.23			
PAVED	0.204		0.95			0.95			
OS-1	0.75	7.35	0.52	2.92	1.14	0.52	3.8	1.49	SHEET FLOW INTO NORTH INTO A HEADWALL THEN NORTH INTO EXISTING FOREBAY
GRASS	0.428		0.20			0.20			
PAVED	0.322		0.95			0.95			
OS-2	0.06	8.18	0.20	2.92	0.04	0.20	3.8	0.05	SHEET FLOWS SOUTH ON TO CAROLINA BEACH ROAD THEN INTO EXISTING NCDOT STORM SYSTEM
GRASS	0.06		0.20			0.20			
PAVED	0		0.95			0.95			
OS-3	0.19	10.78	0.28	2.92	0.15	0.28	3.8	0.20	SHEET FLOWS INTO EAST ON TO INDEPENDENCE BLVD. THEN INTO EXISTING NCDOT STORM SYSTEM
GRASS	0.17		0.20			0.20			
PAVED	0.02		0.95			0.95			
TOTAL	2.81				5.14			6.68	

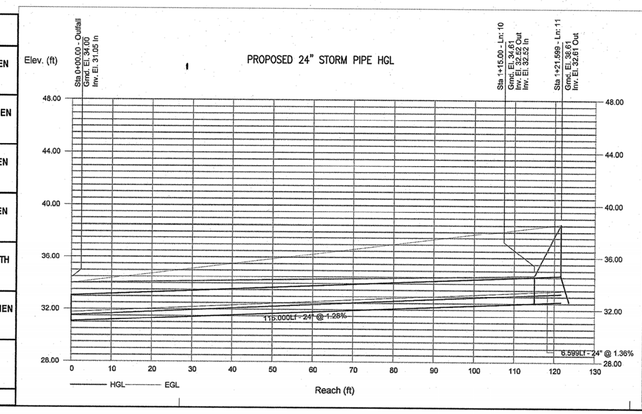

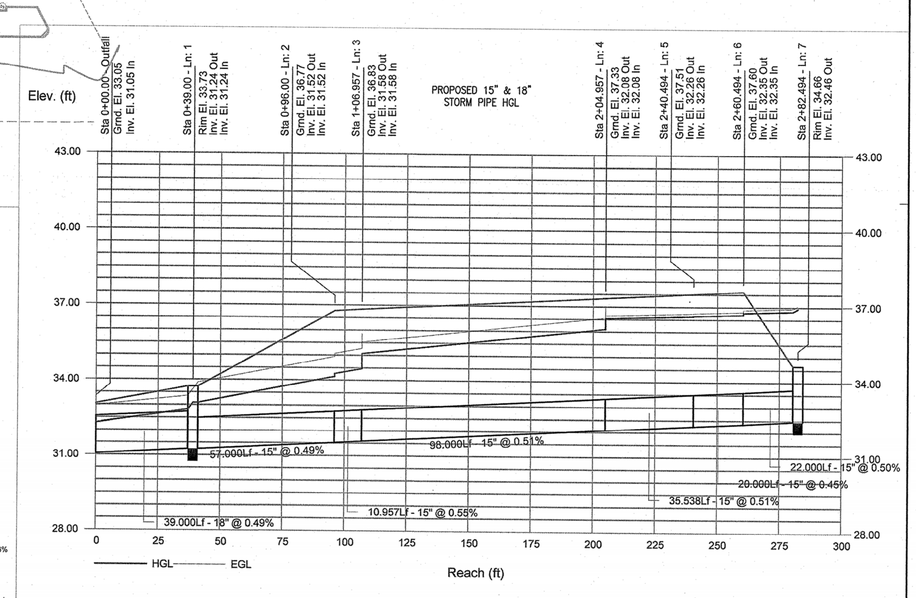

GreenbergFarrow
COAR:
1430 W. Peachtree St. NW
Suite 200
Atlanta, GA 30309
t: 404 601 4000 f: 404 601 3970

PROJECT TEAM

COPYRIGHT NOTICE
This drawing is the property of the above referenced Professional and is not to be used for any purpose other than the specific project and site named herein, and cannot be reproduced in any manner without the express written permission from the Professional.

ISSUE/REVISION RECORD

DATE	DESCRIPTION
10-20-15	SITE PLAN
12-02-15	DP SUBMITTAL

NORTH CAROLINA PROFESSIONAL SEAL 023207 ENGINEER JOHN H. NOURZAD

PROFESSIONAL IN CHARGE
JOHN NOURZAD
PROFESSIONAL ENGINEER
LICENSE NO. 023207
PROJECT MANAGER
LARRY DIEHL
QUALITY CONTROL
FEDERICO OLIVARES, PE
DRAWN BY
RYAN SCOTT, EIT

PROJECT NAME

CIRCLE K CAROLINA BEACH

WILMINGTON NORTH CAROLINA
3739 CAROLINA BEACH RD WILMINGTON, NC

PROJECT NUMBER
20151091

SHEET TITLE

POST DRAINAGE PLAN

SHEET NUMBER

C-4.1

NOT ISSUED FOR CONSTRUCTION

Approved Construction Plan

	Name	Date
Planning		
Traffic		
Fire		

CITY OF WILMINGTON NORTH CAROLINA
Public Services Engineering Division
APPROVED STORMWATER MANAGEMENT PLAN
Date: _____ Permit #_____
Signed: _____

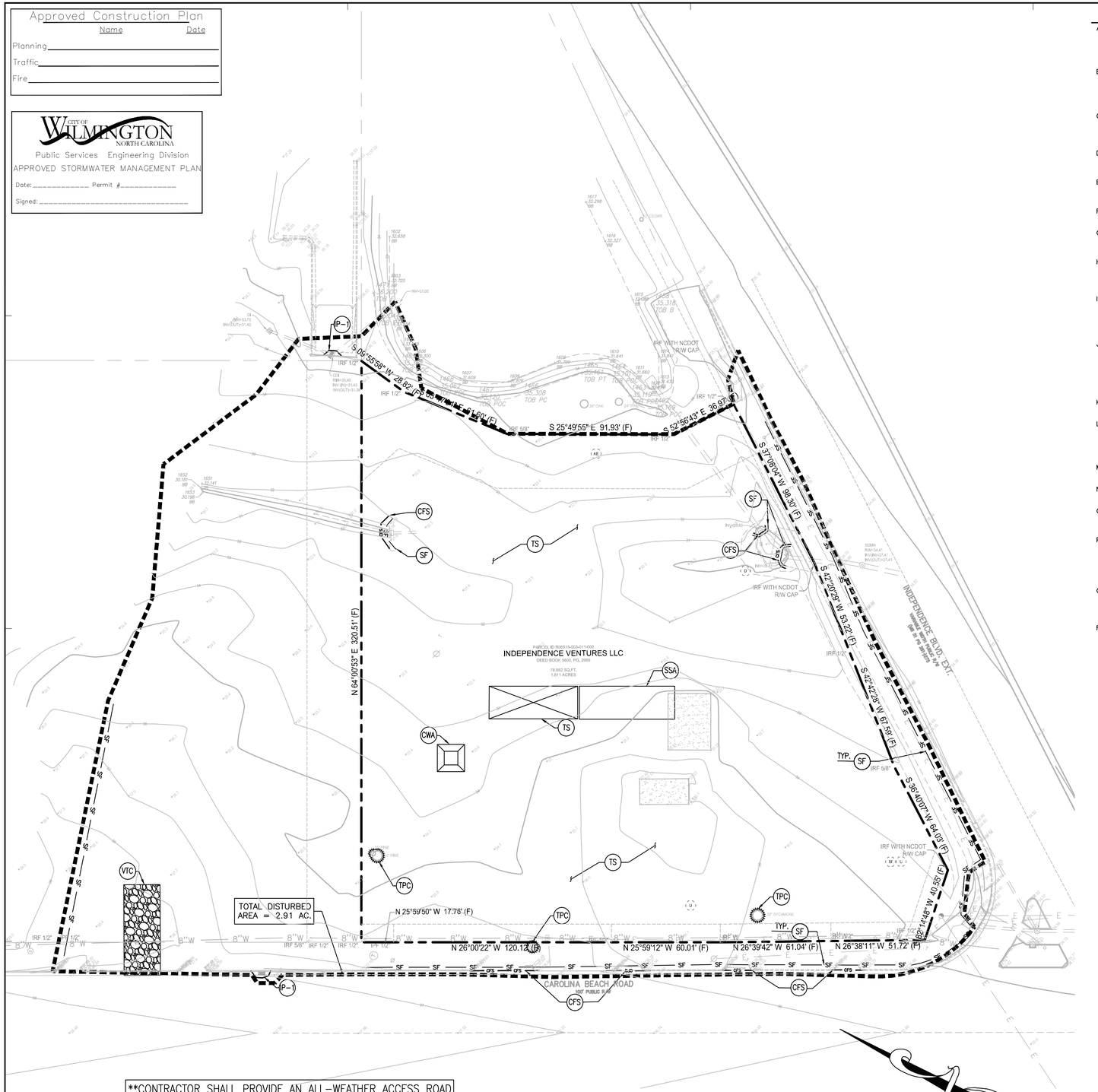

CONTRACTOR SHALL PROVIDE AN ALL-WEATHER ACCESS ROAD AROUND THE CONSTRUCTION SITE AT ALL TIMES

24 HR EMERGENCY CONTACT:
ANDY PRIOLO– 919.566.1714

811 Know what's below. Call before you dig.

GRAPHIC SCALE
30 0 15 30 60 120
(IN FEET)
1 inch = 30 ft.

GENERAL EROSION NOTES

A. ALL CONTRACTORS AND SUBCONTRACTORS INVOLVED WITH STORM WATER POLLUTION PREVENTION SHALL OBTAIN A COPY OF THE STORM WATER POLLUTION PREVENTION PLAN AND THE STATE OF NORTH CAROLINA NPDES GENERAL PERMIT FOR STORM WATER DISCHARGES AND BECOME FAMILIAR WITH THEIR CONTENTS.

B. THE TEMPORARY PARKING AND STORAGE AREA SHALL ALSO BE USED AS THE EQUIPMENT MAINTENANCE AREA, EQUIPMENT CLEANING AREA, EMPLOYEE BREAK AREA, AND AREA FOR LOCATING PORTABLE FACILITIES, OFFICE TRAILERS, AND TOILET FACILITIES. THE EXACT LOCATIONS SHALL BE COORDINATED WITH THE OWNERS CONSTRUCTION MANAGER.

C. ALL WASH WATER (CONCRETE TRUCKS, VEHICLE CLEANING, EQUIPMENT CLEANING, ETC.) SHALL BE DISPOSED OF IN A MANNER THAT PREVENTS CONTACT BETWEEN THESE MATERIALS AND STORM WATER THAT IS DISCHARGED FROM THE SITE.

D. MAINTAIN ON THE SITE OR HAVE READILY AVAILABLE SUFFICIENT OIL AND GREASE ABSORBING MATERIALS AND FLOTATION BOOMS TO CONTAIN AND CLEAN–UP FUEL OR CHEMICAL SPILLS AND LEAKS.

E. DUST ON THE SITE SHALL BE CONTROLLED BY SPRAYING WATER ON DRY AREAS OF THE SITE. THE USE OF MOTOR OILS AND OTHER PETROLEUM BASED OR TOXIC LIQUIDS FOR DUST SUPPRESSION OPERATIONS IS PROHIBITED.

F. NO RUBBISH, TRASH, GARBAGE, OR OTHER SUCH MATERIALS SHALL BE DISCHARGED INTO DRAINAGE DITCHES OR WATERS OF THE STATE.

G. ALL STORM WATER POLLUTION PREVENTION MEASURES PRESENTED ON THIS PLAN, AND IN THE STORM WATER POLLUTION PREVENTION PLAN, SHALL BE INITIATED AS SOON AS PRACTICABLE.

H. NEW OR AFFECTED CUT OR FILLED SLOPES MUST BE AT AN ANGLE THAT CAN BE RETAINED BY VEGETATIVE COVER, AND MUST BE PROVIDED WITH A GROUND COVER SUFFICIENT TO RETAIN EROSION WITHIN 21 CALENDAR DAYS OF COMPLETION OF ANY PHASE (ROUGH OR FINAL) OF GRADING.

I. A PERMANENT GROUND COVER, SUFFICIENT RESTRAIN EROSION, MUST BE PROVIDED WITHIN THE SHORTER OF 15 WORKING OR 90 CALENDAR DAYS (IF IN A HIGH QUALITY ZONE, THE SHORTER OF 15 WORKING OR 60 CALENDAR DAYS) AFTER COMPLETION OF CONSTRUCTION OR DEVELOPMENT ON ANY PORTION OF THE TRACT.

J. IF THE ACTION OF VEHICLES TRAVELING OVER THE GRAVEL CONSTRUCTION ENTRANCES IS NOT SUFFICIENT TO REMOVE THE MAJORITY OF DIRT OR MUD, THEN THE TIRES MUST BE WASHED BEFORE THE VEHICLES ENTER A PUBLIC ROAD. IF WASHING IS USED, PROVISIONS MUST BE MADE TO INTERCEPT THE WASH WATER AND TRAP THE SEDIMENT BEFORE IT IS CARRIED OFF THE SITE. THE EXACT LOCATIONS SHALL BE COORDINATED WITH THE OWNERS CONSTRUCTION MANAGER.

K. ALL MATERIALS SPILLED, DROPPED, WASHED, OR TRACKED FROM VEHICLES ONTO ROADWAYS OR INTO STORM DRAINS MUST BE REMOVED IMMEDIATELY.

L. CONTRACTORS OR SUBCONTRACTORS WILL BE RESPONSIBLE FOR REMOVING SEDIMENT IN THE DETENTION POND AFTER THE STABILIZATION OF THE SITE AND ANY SEDIMENT THAT MAY HAVE COLLECTED IN THE STORM SEWER DRAINAGE SYSTEMS. CONTRACTORS OR SUBCONTRACTORS WILL ALSO BE RESPONSIBLE TO CLEAN THE SWALE FROM ANY SEDIMENT IF NECESSARY.

M. IF SOIL STOCKPILING IS EMPLOYED ON THE SITE, SILT FENCES SHALL BE USED TO HELP CONTAIN THE SEDIMENT.

N. SLOPES SHALL BE LEFT IN A ROUGHENED CONDITION DURING THE GRADING PHASE TO REDUCE RUNOFF VELOCITIES AND EROSION.

O. SEDIMENT BASINS ARE ATTRACTIVE TO CHILDREN AND CAN BE VERY DANGEROUS. IN ALL CASES, LOCAL ORDINANCES AND REGULATIONS REGARDING HEALTH AND SAFETY MUST BE ADHERED TO.

P. ALL TEMPORARY EROSION AND SEDIMENT CONTROL MEASURES SHALL BE DISPOSED OF WITHIN 30 DAYS AFTER FINAL STABILIZATION. FINAL STABILIZATION HAS OCCURRED WHEN ALL SOIL DISTURBING ACTIVITIES ARE COMPLETED AND A UNIFORM PERENNIAL VEGETATIVE COVER WITH A DENSITY OF 70% OF THE COVER FOR UNPAVED AREAS AND AREAS NOT COVERED BY PERMANENT STRUCTURES HAS BEEN EMPLOYED.

Q. DUE TO THE GRADE CHANGES DURING THE DEVELOPMENT OF THE PROJECT, THE CONTRACTOR SHALL BE RESPONSIBLE FOR ADJUSTING THE EROSION CONTROL MEASURES (SILT FENCES, SILT DIKES, ETC.) TO HELP PREVENT EROSION AND STORM WATER POLLUTION.

R. ALL OFF–SITE CONSTRUCTION SHALL BE STABILIZED AT THE END OF EACH WORKING DAY, THIS INCLUDES BACKFILLING OF TRENCHES FOR STORM DRAINS & UTILITY CONSTRUCTION AND PLACEMENT OF GRAVEL OR BITUMINOUS PAVING FOR ROAD CONSTRUCTION.

BMP MAINTENANCE NOTES

ALL MEASURES STATED ON THIS SITE MAP, AND IN THE STORM WATER POLLUTION PREVENTION PLAN, SHALL BE MAINTAINED IN FULLY FUNCTIONAL CONDITION UNTIL NO LONGER REQUIRED FOR A COMPLETED PHASE OF WORK OR FINAL STABILIZATION OF THE SITE. ALL EROSION AND SEDIMENTATION CONTROL MEASURE SHALL BE CHECKED BY A QUALIFIED PERSON IN ACCORDANCE WITH THE CONTRACT DOCUMENTS OR THE APPLICABLE PERMIT, WHICHEVER IS MORE STRINGENT, AND REPAIRED IN ACCORDANCE WITH THE FOLLOWING:

1. INLET PROTECTION DEVICES AND BARRIERS SHALL BE REPAIRED OR REPLACED IF THEY SHOW SIGNS OF UNDERMINING OR DETERIORATION.
2. ALL SEEDED AREAS SHALL BE CHECKED REGULARLY TO SEE THAT GOOD STAND IS MAINTAINED. AREAS SHOULD BE FERTILIZED, WATERED, AND RESEEDED AS NEEDED.
3. SILT FENCES SHALL BE REPAIRED TO THEIR ORIGINAL CONDITIONS IF DAMAGED. SEDIMENT SHALL BE REMOVED FROM THE SILT FENCES WHEN IT REACHES ONE–HALF OF THE SILT FENCE.
3. THE VEHICLE TRACKING CONTROL SHALL BE MAINTAINED IN A CONDITION WHICH WILL PREVENT TRACKING OR FLOW OF MUD ONTO PUBLIC RIGHTS–OF–WAY. THIS MAY REQUIRED PERIODIC TOP DRESSING OF THE CONSTRUCTION EXITS AS CONDITIONS DEMAND. THE AGGREGATE USED SHOULD BE #4 STONE OR 2" OR 3" AGGREGATE.
4. THE TEMPORARY PARKING AND STORAGE AREA SHALL BE KEPT IN GOOD CONDITION (SUITABLE FOR PARKING AND STORAGE). THIS MAY REQUIRE PERIODIC TOP DRESSING OF THE TEMPORARY PARKING AREA AS CONDITIONS DEMAND.
5. PRIOR TO LEAVING THE SITE, ALL VEHICLES SHALL BE CLEANED OF DEBRIS. ANY DEBRIS AND/OR SEDIMENT REACHING THE PUBLIC STREET SHALL BE CLEANED IMMEDIATELY BY A METHOD OTHER THAN FLUSHING.

EXISTING LEGEND:

- INDEX CONTOUR
- INTERMEDIATE CONTOUR
- EDGE OF PAVEMENT
- CURB AND GUTTER
- PROPERTY LINE
- ADJOINER PROPERTY LINE (NOT SURVEYED)
- SWALE / DITCH LINE
- SANITARY SEWER
- STORM SEWER
- OVERHEAD ELECTRIC
- UNDERGROUND COMMUNICATION SERVICE
- UNDERGROUND GAS SERVICE
- UNDERGROUND ELECTRIC SERVICE
- WATER
- IRON REBAR FOUND
- IRON PIPE FOUND
- PLAT / FIELD
- UTILITY POLE
- GUY ANCHOR WIRE
- SIGN
- CURB DRAIN INLET (CDI)/DRAIN INLET (DI)
- STORM DRAIN MANHOLE (SDMH)
- SANITARY SEWER MANHOLE (SMH)
- WATER VALVE & BACK PREVENTER VALVE
- WATER METER
- FIRE HYDRANT (HYD.)
- TREE TRUNK
- CONCRETE
- END SECTIONS

PROPOSED

- BOUNDARY LINE
- CONTOUR ELEVATIONS
- CONSTRUCTION FENCE (SEE DETAIL SHEETS)
- LIMIT OF DISTURBED AREA

PROJECT INFORMATION

THE PROPOSED PROJECT IS CONSTRUCTING A GAS STATION CONSISTING OF A 5,995 S.F. CONVENIENT STORE, AN OVERHEAD CANOPY WITH 10 PUMPING ISLANDS AND ASSOCIATED PARKING AREA.

ACREAGE OF SITE IS 1.81 ACRES.

DISTURBED ACREAGE OF SITE (INCLUDING OFF–SITE WORK) IS 3.09 ACRES.

ANTICIPATED CONSTRUCTION START DATE IS JUNE 2016 AND COMPLETION DATE IS DECEMBER 2016.

CIRCLE K CONTRACTOR TO TAKE APPROPRIATE MEASURES TO KEEP SEDIMENT FROM ESCAPING SITE AND ALL ACCUMULATED SEDIMENT SHALL BE CLEANED OUT AND REMOVED FROM SITE.

KEY NOTES

- VTC VEHICLE TRACKING CONTROL
- SF SEDIMENTATION/SILT FENCE WITH WIRE SUPPORT
- CFS COMPOST FILTER SOCK
- CWA CONCRETE WASHOUT AREA
- TS TEMPORARY STORAGE AREA
- SSA STABILIZED STAGING AREA
- TPC TREE PROTECTION DURING CONSTRUCTION PER (SD15–09)

SEQUENCE OF CONSTRUCTION

PHASE I
1. INSTALL STABILIZED CONSTRUCTION ENTRANCES.
2. PREPARE TEMPORARY PARKING AND STORAGE AREA.
3. CONSTRUCT THE SILT FENCES ON THE SITE.
4. INSTALL EROSION LOG AS INDICATED ON THE PLAN
5. CLEAR AND GRUB THE SITE.
6. BEGIN GRADING THE SITE.

PHASE II
7. START CONSTRUCTION OF BUILDING PAD AND STRUCTURES.
8. TEMPORARILY SEED DENUDED AREAS.
9. INSTALL UTILITIES, UNDERDRAINS, STORM SEWERS, CURBS AND GUTTERS.
10. INSTALL EROSION LOG AS SHOWN ON THE PLANS.
11. INSTALL RIP RAP AROUND OUTLET STRUCTURES.
12. PREPARE SITE FOR PAVING.
13. PAVE SITE.
14. COMPLETE GRADING AND INSTALL PERMANENT SEEDING AND PLANTING.
15. REMOVE ALL TEMPORARY EROSION AND SEDIMENT CONTROL DEVICES (ONLY IF SITE IS STABILIZED).

SURFACE STABILIZATION MEASURES

KEY	PRACTICE	DESCRIPTION	NOTES
M	DISTURBED AREA STABILIZATION(W/ MULCHING ONLY)	Temporary protection for disturbed areas; as an erosion retardant cover when temporary grassing is inapplicable.	Straw (1–2 tons/acre), Wood chips (5–6 tons/acre),, Wood fiber (0.5–1 tons/acre), Bark (35 cy/acre), Corn stalks (4–6 tons / acre), or Nets/Mats/Chemical stabilizers applicable
TS	DISTURBED AREA STABILIZATION(W/ TEMP. SEEDING)	Planting rapid–growing annual grasses, small grains, or legumes to provide initial, temporary cover for erosion control on disturbed areas.	May–Aug.: German millet (40 lbs./ac), Aug.–Dec.: Rye grain (120 lbs./ac), Jan.–May: Mixture of Rye grain (120 lbs./ac) and Kobe lespedeza (50 lbs./ac) 750 (1000 lbs.–for Fall) lbs./ac of 10–10–10 fertilizer
PS	DISTURBED AREA STABILIZATION(W/ PERM. SEEDING)	Controlling runoff and preventing erosion by establishing a perennial vegetative cover with seed.	Mixture of Tall fescue (80 lbs./ac) and Kobe lespedeza (40 lbs./ac) with 1000 lbs./ac of 10–10–10 fertilizer and 4,000 lbs./ac of lime *May–Aug.: Add 10 lbs./ac German millet *Oct.–Feb.: Add 40 lbs./ac Rye grain
SO	DISTURBED AREA STABILIZATION(W/ PERM. SODDING)	Transplanting vegetative sections of plant materials to promptly stabilize areas that are subject to erosion.	Warm Season: Hybrid Bermuda grass, Zoysiagrass, Centipede grass, or St Augustine grass Cool Season: Tall fescue/Kentucky bluegrass
DC	DUST CONTROL	Utilize dust control methods whenever there are offsite impacts, especially periods of drought until final stabilization is reached.	Phasing the project, vegetative cover, Mulch, sprinkling water, spray–on–adhesive, calcium chloride, barriers, etc.

SOIL EROSION/SEDIMENTATION CONTROL OPERATION TIME SCHEDULE

NOTE: GENERAL CONTRACTOR TO COMPLETE TABLE WITH THEIR SPECIFIC PROJECT SCHEDULE

CONSTRUCTION SEQUENCE	JAN	FEB	MAR	APR	MAY	JUN	JUL	AUG	SEP	OCT	NOV	DEC	JAN	FEB	MAR	APR	MAY	JUN	JUL	AUG	SEP	OCT	NOV	DEC
TEMPORARY CONTROL MEASURES																								
STRIP & STOCKPILE TOPSOIL																								
STORM FACILITIES																								
TEMPORARY CONSTRUCTION ROADS																								
FOUNDATION / BUILDING CONSTRUCTION																								
SITE CONSTRUCTION																								
PERMANENT CONTROL STRUCTURES																								
FINISH GRADING																								
LANDSCAPING/SEED/FINAL STABILIZATION																								

GreenbergFarrow
COA#:
1430 W. Peachtree St. NW
Suite 200
Atlanta, GA 30309
t: 404 601 4000 f: 404 601 3970

PROJECT TEAM

COPYRIGHT NOTICE
This drawing is the property of the above referenced Professional and is not to be used for any purpose other than the specific project and site named herein, and cannot be reproduced in any manner without the express written permission from the Professional

ISSUE/REVISION RECORD

DATE	DESCRIPTION
10–20–15	SITE PLAN
12–02–15	DP SUBMITTAL
02–03–16	NCDOT RESUBMITTAL
02–03–16	COW SITE RESUBMITTAL

NORTH CAROLINA PROFESSIONAL SEAL ENGINEER JOHN H. NOURZAD
2/3/16

PROFESSIONAL IN CHARGE
JOHN NOURZAD
PROFESSIONAL ENGINEER
LICENSE NO. 023207
PROJECT MANAGER
LARRY DIEHL
QUALITY CONTROL
FEDERICO OLIVARES, PE
DRAWN BY
RYAN SCOTT, EIT

PROJECT NAME

CIRCLE K CAROLINA BEACH

WILMINGTON
NORTH CAROLINA
3739 CAROLINA BEACH RD
WILMINGTON, NC

PROJECT NUMBER
20151091

SHEET TITLE

EROSION CONTROL PLAN PHASE I

SHEET NUMBER

C-5.0

NOT ISSUED FOR CONSTRUCTION

Approved Construction Plan

	Name	Date
Planning		
Traffic		
Fire		

CITY OF WILMINGTON NORTH CAROLINA
Public Services Engineering Division
APPROVED STORMWATER MANAGEMENT PLAN
Date: _____ Permit #_____
Signed: _____

CONTRACTOR SHALL PROVIDE AN ALL-WEATHER ACCESS ROAD AROUND THE CONSTRUCTION SITE AT ALL TIMES

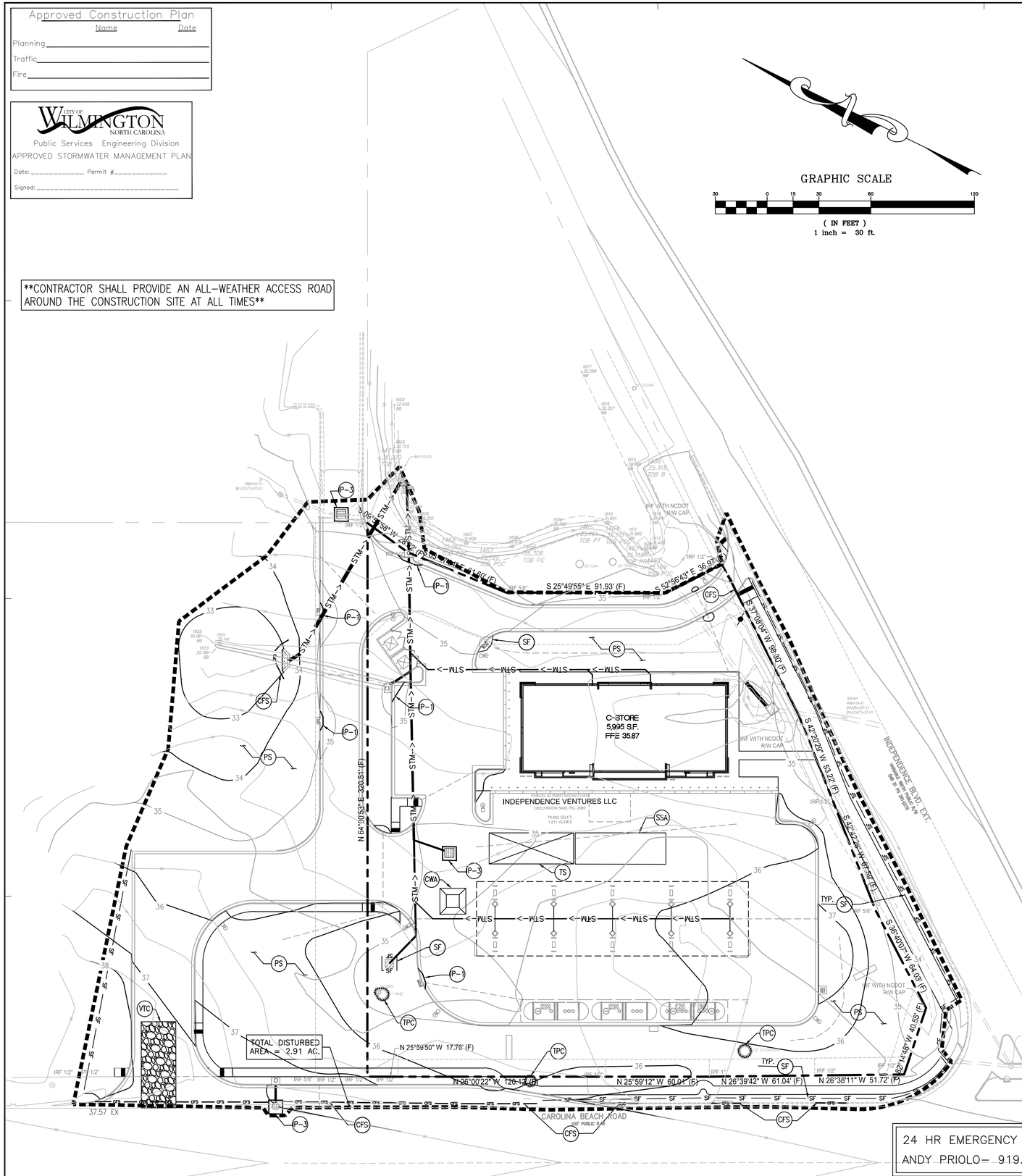

24 HR EMERGENCY CONTACT:
ANDY PRIOLO– 919.566.1714

GENERAL EROSION NOTES

A. ALL CONTRACTORS AND SUBCONTRACTORS INVOLVED WITH STORM WATER POLLUTION PREVENTION SHALL OBTAIN A COPY OF THE STORM WATER POLLUTION PREVENTION PLAN AND THE STATE OF NORTH CAROLINA NPDES GENERAL PERMIT FOR STORM WATER DISCHARGES AND BECOME FAMILIAR WITH THEIR CONTENTS.

B. THE TEMPORARY PARKING AND STORAGE AREA SHALL ALSO BE USED AS THE EQUIPMENT MAINTENANCE AREA, EQUIPMENT CLEANING AREA, EMPLOYEE BREAK AREA, AND AREA FOR LOCATING PORTABLE FACILITIES, OFFICE TRAILERS, AND TOILET FACILITIES. THE EXACT LOCATIONS SHALL BE COORDINATED WITH THE OWNERS CONSTRUCTION MANAGER.

C. ALL WASH WATER (CONCRETE TRUCKS, VEHICLE CLEANING, EQUIPMENT CLEANING, ETC.) SHALL BE DISPOSED OF IN A MANNER THAT PREVENTS CONTACT BETWEEN THESE MATERIALS AND STORM WATER THAT IS DISCHARGED FROM THE SITE.

D. MAINTAIN ON THE SITE OR HAVE READILY AVAILABLE SUFFICIENT OIL AND GREASE ABSORBING MATERIALS AND FLOTATION BOOMS TO CONTAIN AND CLEAN-UP FUEL OR CHEMICAL SPILLS AND LEAKS.

E. DUST ON THE SITE SHALL BE CONTROLLED BY SPRAYING WATER ON DRY AREAS OF THE SITE. THE USE OF MOTOR OILS AND OTHER PETROLEUM BASED OR TOXIC LIQUIDS FOR DUST SUPPRESSION OPERATIONS IS PROHIBITED.

F. NO RUBBISH, TRASH, GARBAGE, OR OTHER SUCH MATERIALS SHALL BE DISCHARGED INTO DRAINAGE DITCHES OR WATERS OF THE STATE.

G. ALL STORM WATER POLLUTION PREVENTION MEASURES PRESENTED ON THIS PLAN, AND IN THE STORM WATER POLLUTION PREVENTION PLAN, SHALL BE INITIATED AS SOON AS PRACTICABLE.

H. NEW OR AFFECTED CUT OR FILLED SLOPES MUST BE AT AN ANGLE THAT CAN BE RETAINED BY VEGETATIVE COVER, AND MUST BE PROVIDED WITH A GROUND COVER SUFFICIENT TO RETAIN EROSION WITHIN 21 CALENDAR DAYS OF COMPLETION OF ANY PHASE (ROUGH OR FINAL) OF GRADING.

I. A PERMANENT GROUND COVER, SUFFICIENT RESTRAIN EROSION, MUST BE PROVIDED WITHIN THE SHORTER OF 15 WORKING OR 90 CALENDAR DAYS (IF IN A HIGH QUALITY ZONE, THE SHORTER OF 15 WORKING OR 60 CALENDAR DAYS) AFTER COMPLETION OF CONSTRUCTION OR DEVELOPMENT ON ANY PORTION OF THE TRACT.

J. IF THE ACTION OF VEHICLES TRAVELING OVER THE GRAVEL CONSTRUCTION ENTRANCES IS NOT SUFFICIENT TO REMOVE THE MAJORITY OF DIRT OR MUD, THEN THE TIRES MUST BE WASHED BEFORE THE VEHICLES ENTER A PUBLIC ROAD. IF WASHING IS USED, PROVISIONS MUST BE MADE TO INTERCEPT THE WASH WATER AND TRAP THE SEDIMENT BEFORE IT IS CARRIED OFF THE SITE. THE EXACT LOCATIONS SHALL BE COORDINATED WITH THE OWNERS CONSTRUCTION MANAGER.

K. ALL MATERIALS SPILLED, DROPPED, WASHED, OR TRACKED FROM VEHICLES ONTO ROADWAYS OR INTO STORM DRAINS MUST BE REMOVED IMMEDIATELY.

L. CONTRACTORS OR SUBCONTRACTORS WILL BE RESPONSIBLE FOR REMOVING SEDIMENT IN THE DETENTION POND AFTER THE STABILIZATION OF THE SITE AND ANY SEDIMENT THAT MAY HAVE COLLECTED IN THE STORM SEWER DRAINAGE SYSTEMS. CONTRACTORS OR SUBCONTRACTORS WILL ALSO BE RESPONSIBLE TO CLEAN THE SWALE FROM ANY SEDIMENT IF NECESSARY.

M. IF SOIL STOCKPILING IS EMPLOYED ON THE SITE, SILT FENCES SHALL BE USED TO HELP CONTAIN THE SEDIMENT.

N. SLOPES SHALL BE LEFT IN A ROUGHENED CONDITION DURING THE GRADING PHASE TO REDUCE RUNOFF VELOCITIES AND EROSION.

O. SEDIMENT BASINS ARE ATTRACTIVE TO CHILDREN AND CAN BE VERY DANGEROUS. IN ALL CASES, LOCAL ORDINANCES AND REGULATIONS REGARDING HEALTH AND SAFETY MUST BE ADHERED TO.

P. ALL TEMPORARY EROSION AND SEDIMENT CONTROL MEASURES SHALL BE DISPOSED OF WITHIN 30 DAYS AFTER FINAL STABILIZATION. FINAL STABILIZATION HAS OCCURRED WHEN ALL SOIL DISTURBING ACTIVITIES ARE COMPLETED AND A UNIFORM PERENNIAL VEGETATIVE COVER WITH A DENSITY OF 70% OF THE COVER FOR UNPAVED AREAS AND AREAS NOT COVERED BY PERMANENT STRUCTURES HAS BEEN EMPLOYED.

Q. DUE TO THE GRADE CHANGES DURING THE DEVELOPMENT OF THE PROJECT, THE CONTRACTOR SHALL BE RESPONSIBLE FOR ADJUSTING THE EROSION CONTROL MEASURES (SILT FENCES, SILT DIKES, ETC.) TO HELP PREVENT EROSION AND STORM WATER POLLUTION.

R. ALL OFF-SITE CONSTRUCTION SHALL BE STABILIZED AT THE END OF EACH WORKING DAY, THIS INCLUDES BACKFILLING OF TRENCHES FOR STORM DRAINS & UTILITY CONSTRUCTION AND PLACEMENT OF GRAVEL OR BITUMINOUS PAVING FOR ROAD CONSTRUCTION.

BMP MAINTENANCE NOTES

ALL MEASURES STATED ON THIS SITE MAP, AND IN THE STORM WATER POLLUTION PREVENTION PLAN, SHALL BE MAINTAINED IN FULLY FUNCTIONAL CONDITION UNTIL NO LONGER REQUIRED FOR A COMPLETED PHASE OF WORK OR FINAL STABILIZATION OF THE SITE. ALL EROSION AND SEDIMENTATION CONTROL MEASURE SHALL BE CHECKED BY A QUALIFIED PERSON IN ACCORDANCE WITH THE CONTRACT DOCUMENTS OR THE APPLICABLE PERMIT, WHICHEVER IS MORE STRINGENT, AND REPAIRED IN ACCORDANCE WITH THE FOLLOWING:

INLET PROTECTION DEVICES AND BARRIERS SHALL BE REPAIRED OR REPLACED IF THEY SHOW SIGNS OF UNDERMINING OR DETERIORATION.

1. ALL SEEDED AREAS SHALL BE CHECKED REGULARLY TO SEE THAT GOOD STAND IS MAINTAINED. AREAS SHOULD BE FERTILIZED, WATERED, AND RESEEDED AS NEEDED.
2. SILT FENCES SHALL BE REPAIRED TO THEIR ORIGINAL CONDITIONS IF DAMAGED. SEDIMENT SHALL BE REMOVED FROM THE SILT FENCES WHEN IT REACHES ONE-HALF OF THE SILT FENCE.
3. THE VEHICLE TRACKING CONTROL SHALL BE MAINTAINED IN A CONDITION WHICH WILL PREVENT TRACKING OR FLOW OF MUD ONTO PUBLIC RIGHTS-OF-WAY. THIS MAY REQUIRED PERIODIC TOP DRESSING OF THE CONSTRUCTION EXITS AS CONDITIONS DEMAND. THE AGGREGATE USED SHOULD BE #4 STONE OR 2" OR 3" AGGREGATE.
4. THE TEMPORARY PARKING AND STORAGE AREA SHALL BE KEPT IN GOOD CONDITION (SUITABLE FOR PARKING AND STORAGE). THIS MAY REQUIRE PERIODIC TOP DRESSING OF THE TEMPORARY PARKING AREA AS CONDITIONS DEMAND.
5. PRIOR TO LEAVING THE SITE, ALL VEHICLES SHALL BE CLEANED OF DEBRIS. ANY DEBRIS AND/OR SEDIMENT REACHING THE PUBLIC STREET SHALL BE CLEANED IMMEDIATELY BY A METHOD OTHER THAN FLUSHING.

EXISTING LEGEND:

- 350 — INDEX CONTOUR
- 352 — INTERMEDIATE CONTOUR
- EDGE OF PAVEMENT
- CURB AND GUTTER
- PROPERTY LINE
- ADJOINER PROPERTY LINE (NOT SURVEYED)
- SWALE / DITCH LINE
- SAN — SANITARY SEWER
- STORM SEWER
- E — OVERHEAD ELECTRIC
- T — UNDERGROUND COMMUNICATION SERVICE
- G — UNDERGROUND GAS SERVICE
- E — UNDERGROUND ELECTRIC SERVICE
- DOM — WATER
- IRF — IRON REBAR FOUND
- IPF — IRON PIPE FOUND
- (P) / (F) — PLAT / FIELD
- UTILITY POLE
- GUY ANCHOR WIRE
- SIGN
- CURB DRAIN INLET (CDI)/DRAIN INLET (DI)
- STORM DRAIN MANHOLE (SDMH)
- SANITARY SEWER MANHOLE (SMH)
- WATER VALVE & BACK PREVENTER VALVE
- WATER METER
- FIRE HYDRANT (HYD.)
- 18" OAK — TREE TRUNK
- CONCRETE
- END SECTIONS

PROPOSED

- BOUNDARY LINE
- XX — CONTOUR ELEVATIONS
- SF — CONSTRUCTION FENCE (SEE DETAIL SHEETS)
- LIMIT OF DISTURBED AREA

PROJECT INFORMATION

THE PROPOSED PROJECT IS CONSTRUCTING A GAS STATION CONSISTING OF A 5,995 S.F. CONVENIENT STORE, AN OVERHEAD CANOPY WITH 10 PUMPING ISLANDS AND ASSOCIATED PARKING AREA.

ACREAGE OF SITE IS 1.81 ACRES.

DISTURBED ACREAGE OF SITE (INCLUDING OFF-SITE WORK) IS 3.09 ACRES.

ANTICIPATED CONSTRUCTION START DATE IS JUNE 2016 AND COMPLETION DATE IS DECEMBER 2016.

CIRCLE K CONTRACTOR TO TAKE APPROPRIATE MEASURES TO KEEP SEDIMENT FROM ESCAPING SITE AND ALL ACCUMULATED SEDIMENT SHALL BE CLEANED OUT AND REMOVED FROM SITE.

KEY NOTES

- VTC — VEHICLE TRACKING CONTROL
- RR — ROCK RIP RAP TO REMAIN AFTER CONSTRUCTION
- SF — SF — SEDIMENTATION/SILT FENCE WITH WIRE SUPPORT
- CFS — COMPOST FILTER SOCK
- CWA — CONCRETE WASHOUT AREA
- TS — TEMPORARY STORAGE AREA
- SSA — STABILIZED STAGING AREA
- TPC — TREE PROTECTION DURING CONSTRUCTION PER (SD15-09)

SEQUENCE OF CONSTRUCTION

PHASE I

1. INSTALL STABILIZED CONSTRUCTION ENTRANCES.
2. PREPARE TEMPORARY PARKING AND STORAGE AREA.
3. CONSTRUCT THE SILT FENCES ON THE SITE.
4. INSTALL EROSION LOG AS INDICATED ON THE PLAN
5. CLEAR AND GRUB THE SITE.
6. BEGIN GRADING THE SITE.

PHASE II

7. START CONSTRUCTION OF BUILDING PAD AND STRUCTURES.
8. TEMPORARILY SEED DENUDED AREAS.
9. INSTALL UTILITIES, UNDERDRAINS, STORM SEWERS, CURBS AND GUTTERS.
10. INSTALL EROSION LOG AS SHOWN ON THE PLANS.
11. INSTALL RIP RAP AROUND OUTLET STRUCTURES.
12. PREPARE SITE FOR PAVING.
13. PAVE SITE.
14. COMPLETE GRADING AND INSTALL PERMANENT SEEDING AND PLANTING.
15. REMOVE ALL TEMPORARY EROSION AND SEDIMENT CONTROL DEVICES (ONLY IF SITE IS STABILIZED).

SURFACE STABILIZATION MEASURES

KEY	PRACTICE	DESCRIPTION	NOTES
M	DISTURBED AREA STABILIZATION(W/ MULCHING ONLY)	Temporary protection for disturbed areas; as an erosion retardant cover when temporary grassing is inapplicable.	Straw (1–2 tons/acre), Wood chips (5–6 tons/acre),, Wood fiber (0.5–1 tons/acre), Bark (35 cy/acre), Corn stalks (4–6 tons / acre), or Nets/Mats/Chemical stabilizers applicable
TS	DISTURBED AREA STABILIZATION(W/ TEMP. SEEDING)	Planting rapid-growing annual grasses, small grains, or legumes to provide initial, temporary cover for erosion control on disturbed areas.	May–Aug.: German millet (40 lbs./ac), Aug.–Dec.: Rye grain (120 lbs./ac), Jan.–May: Mixture of Rye grain (120 lbs./ac) and Kobe lespedeza (50 lbs./ac) 750 (1000 lbs.–for Fall) lbs./ac of 10–10–10 fertilizer
PS	DISTURBED AREA STABILIZATION(W/ PERM. SEEDING)	Controlling runoff and preventing erosion by establishing a perennial vegetative cover with seed.	Mixture of Tall fescue (80 lbs./ac) and Kobe lespedeza (40 lbs./ac) with 1000 lbs./ac of 10–10–10 fertilizer and 4,000 lbs./ac of lime *May–Aug.: Add 10 lbs./ac German millet *Oct.–Feb.: Add 40 lbs./ac Rye grain
SO	DISTURBED AREA STABILIZATION(W/ PERM. SODDING)	Transplanting vegetative sections of plant materials to promptly stabilize areas that are subject to erosion.	Warm Season: Hybrid Bermuda grass, Zoysiagrass, Centipede grass, or St Augustine grass Cool Season: Tall fescue/Kentucky bluegrass
DC	DUST CONTROL	Utilize dust control methods whenever there are offsite impacts, especially periods of drought until final stabilization is reached.	Phasing the project, vegetative cover, Mulch, sprinkling water, spray–on–adhesive, calcium chloride, barriers, etc.

Know what's **below.** **Call** before you dig.

SOIL EROSION/SEDIMENTATION CONTROL OPERATION TIME SCHEDULE

NOTE: GENERAL CONTRACTOR TO COMPLETE TABLE WITH THEIR SPECIFIC PROJECT SCHEDULE

CONSTRUCTION SEQUENCE	JAN	FEB	MAR	APR	MAY	JUN	JUL	AUG	SEP	OCT	NOV	DEC	JAN	FEB	MAR	APR	MAY	JUN	JUL	AUG	SEP	OCT	NOV	DEC
TEMPORARY CONTROL MEASURES																								
STRIP & STOCKPILE TOPSOIL																								
STORM FACILITIES																								
TEMPORARY CONSTRUCTION ROADS																								
FOUNDATION / BUILDING CONSTRUCTION																								
SITE CONSTRUCTION																								
PERMANENT CONTROL STRUCTURES																								
FINISH GRADING																								
LANDSCAPING/SEED/FINAL STABILIZATION																								

GreenbergFarrow
COA#:
1430 W. Peachtree St. NW
Suite 200
Atlanta, GA 30309
t: 404 601 4000 f: 404 601 3970

PROJECT TEAM

COPYRIGHT NOTICE
This drawing is the property of the above referenced Professional and is not to be used for any purpose other than the specific project and site named herein, and cannot be reproduced in any manner without the express written permission from the Professional

ISSUE/REVISION RECORD

DATE	DESCRIPTION
10–20–15	SITE PLAN
12–02–15	DP SUBMITTAL
02–03–16	NCDOT RESUBMITTAL
02–03–16	COW SITE RESUBMITTAL

NORTH CAROLINA PROFESSIONAL SEAL ENGINEER JOHN H. NOURZAD
2/3/16

PROFESSIONAL IN CHARGE
JOHN NOURZAD
PROFESSIONAL ENGINEER
LICENSE NO. 023207
PROJECT MANAGER
LARRY DIEHL
QUALITY CONTROL
FEDERICO OLIVARES, PE
DRAWN BY
RYAN SCOTT, EIT

PROJECT NAME

CIRCLE K CAROLINA BEACH

WILMINGTON NORTH CAROLINA

3739 CAROLINA BEACH RD WILMINGTON, NC

PROJECT NUMBER
20151091

SHEET TITLE

EROSION CONTROL PLAN PHASE II

SHEET NUMBER

C-5.1

NOT ISSUED FOR CONSTRUCTION

Concrete Washout Area (CWA) MM-1

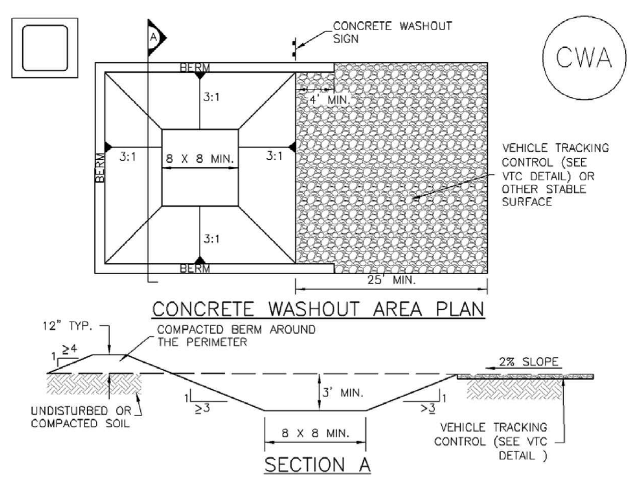

CWA–1. CONCRETE WASHOUT AREA

CWA INSTALLATION NOTES

1. SEE PLAN VIEW FOR:
   –CWA INSTALLATION LOCATION.
2. DO NOT LOCATE AN UNLINED CWA WITHIN 400' OF ANY NATURAL DRAINAGE PATHWAY OR WATERBODY. DO NOT LOCATE WITHIN 1,000' OF ANY WELLS OR DRINKING WATER SOURCES. IF SITE CONSTRAINTS MAKE THIS INFEASIBLE, OR IF HIGHLY PERMEABLE SOILS EXIST ON SITE, THE CWA MUST BE INSTALLED WITH AN IMPERMEABLE LINER (16 MIL MIN. THICKNESS) OR SURFACE STORAGE ALTERNATIVES USING PREFABRICATED CONCRETE WASHOUT DEVICES OR A LINED ABOVE GROUND STORAGE ARE SHOULD BE USED.
3. THE CWA SHALL BE INSTALLED PRIOR TO CONCRETE PLACEMENT ON SITE.
4. CWA SHALL INCLUDE A FLAT SUBSURFACE PIT THAT IS AT LEAST 8' BY 8' SLOPES LEADING OUT OF THE SUBSURFACE PIT SHALL BE 3:1 OR FLATTER. THE PIT SHALL BE AT LEAST 3' DEEP.
5. BERM SURROUNDING SIDES AND BACK OF THE CWA SHALL HAVE MINIMUM HEIGHT OF 1'.
6. VEHICLE TRACKING PAD SHALL BE SLOPED 2% TOWARDS THE CWA.
7. SIGNS SHALL BE PLACED AT THE CONSTRUCTION ENTRANCE, AT THE CWA, AND ELSEWHERE AS NECESSARY TO CLEARLY INDICATE THE LOCATION OF THE CWA TO OPERATORS OF CONCRETE TRUCKS AND PUMP RIGS.
8. USE EXCAVATED MATERIAL FOR PERIMETER BERM CONSTRUCTION.

November 2010 Urban Drainage and Flood Control District Urban Storm Drainage Criteria Manual Volume 3 CWA-3

MM-1 Concrete Washout Area (CWA)

CWA MAINTENANCE NOTES

1. INSPECT BMPs EACH WORKDAY, AND MAINTAIN THEM IN EFFECTIVE OPERATING CONDITION. MAINTENANCE OF BMPs SHOULD BE PROACTIVE, NOT REACTIVE. INSPECT BMPs AS SOON AS POSSIBLE (AND ALWAYS WITHIN 24 HOURS) FOLLOWING A STORM THAT CAUSES SURFACE EROSION, AND PERFORM NECESSARY MAINTENANCE.
2. FREQUENT OBSERVATIONS AND MAINTENANCE ARE NECESSARY TO MAINTAIN BMPs IN EFFECTIVE OPERATING CONDITION. INSPECTIONS AND CORRECTIVE MEASURES SHOULD BE DOCUMENTED THOROUGHLY.
3. WHERE BMPs HAVE FAILED, REPAIR OR REPLACEMENT SHOULD BE INITIATED UPON DISCOVERY OF THE FAILURE.
4. THE CWA SHALL BE REPAIRED, CLEANED, OR ENLARGED AS NECESSARY TO MAINTAIN CAPACITY FOR CONCRETE WASTE. CONCRETE MATERIALS, ACCUMULATED IN PIT, SHALL BE REMOVED ONCE THE MATERIALS HAVE REACHED A DEPTH OF 2'.
5. CONCRETE WASHOUT WATER, WASTED PIECES OF CONCRETE AND ALL OTHER DEBRIS IN THE SUBSURFACE PIT SHALL BE TRANSPORTED FROM THE JOB SITE IN A WATER–TIGHT CONTAINER AND DISPOSED OF PROPERLY.
6. THE CWA SHALL REMAIN IN PLACE UNTIL ALL CONCRETE FOR THE PROJECT IS PLACED.
7. WHEN THE CWA IS REMOVED, COVER THE DISTURBED AREA WITH TOP SOIL, SEED AND MULCH OR OTHERWISE STABILIZED IN A MANNER APPROVED BY THE LOCAL JURISDICTION.

(DETAIL ADAPTED FROM DOUGLAS COUNTY, COLORADO AND THE CITY OF PARKER, COLORADO, NOT AVAILABLE IN AUTOCAD).

NOTE: MANY JURISDICTIONS HAVE BMP DETAILS THAT VARY FROM UDFCD STANDARD DETAILS. CONSULT WITH LOCAL JURISDICTIONS AS TO WHICH DETAIL SHOULD BE USED WHEN DIFFERENCES ARE NOTED.

CWA-4 Urban Drainage and Flood Control District Urban Storm Drainage Criteria Manual Volume 3 November 2010

SC-6 Inlet Protection (IP)

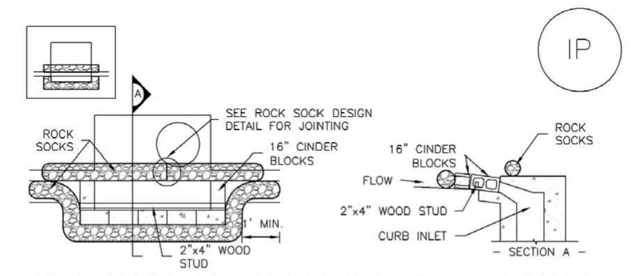

IP–1. BLOCK AND ROCK SOCK SUMP OR ON GRADE INLET PROTECTION

BLOCK AND CURB SOCK INLET PROTECTION INSTALLATION NOTES

1. SEE ROCK SOCK DESIGN DETAIL FOR INSTALLATION REQUIREMENTS.
2. CONCRETE "CINDER" BLOCKS SHALL BE LAID ON THEIR SIDES AROUND THE INLET IN A SINGLE ROW, ABUTTING ONE ANOTHER WITH THE OPEN END FACING AWAY FROM THE CURB.
3. GRAVEL BAGS SHALL BE PLACED AROUND CONCRETE BLOCKS, CLOSELY ABUTTING ONE ANOTHER AND JOINTED TOGETHER IN ACCORDANCE WITH ROCK SOCK DESIGN DETAIL.

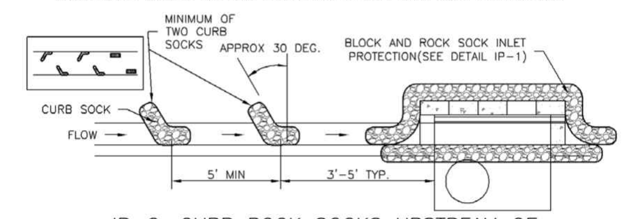

IP–2. CURB ROCK SOCKS UPSTREAM OF INLET PROTECTION

CURB ROCK SOCK INLET PROTECTION INSTALLATION NOTES

1. SEE ROCK SOCK DESIGN DETAIL INSTALLATION REQUIREMENTS.
2. PLACEMENT OF THE SOCK SHALL BE APPROXIMATELY 30 DEGREES FROM PERPENDICULAR IN THE OPPOSITE DIRECTION OF FLOW.
3. SOCKS ARE TO BE FLUSH WITH THE CURB AND SPACED A MINIMUM OF 5 FEET APART.
4. AT LEAST TWO CURB SOCKS IN SERIES ARE REQUIRED UPSTREAM OF ON–GRADE INLETS.

IP-4 Urban Drainage and Flood Control District Urban Storm Drainage Criteria Manual Volume 3 August 2013

SC-6 Inlet Protection (IP)

GENERAL INLET PROTECTION INSTALLATION NOTES

1. SEE PLAN VIEW FOR:
   –LOCATION OF INLET PROTECTION.
   –TYPE OF INLET PROTECTION (IP.1, IP.2, IP.3, IP.4, IP.5, IP.6)
2. INLET PROTECTION SHALL BE INSTALLED PROMPTLY AFTER INLET CONSTRUCTION OR PAVING IS COMPLETE (TYPICALLY WITHIN 48 HOURS). IF A RAINFALL/RUNOFF EVENT IS FORECAST, INSTALL INLET PROTECTION PRIOR TO ONSET OF EVENT.
3. MANY JURISDICTIONS HAVE BMP DETAILS THAT VARY FROM UDFCD STANDARD DETAILS. CONSULT WITH LOCAL JURISDICTIONS AS TO WHICH DETAIL SHOULD BE USED WHEN DIFFERENCES ARE NOTED.

INLET PROTECTION MAINTENANCE NOTES

1. INSPECT BMPs EACH WORKDAY, AND MAINTAIN THEM IN EFFECTIVE OPERATING CONDITION. MAINTENANCE OF BMPs SHOULD BE PROACTIVE, NOT REACTIVE. INSPECT BMPs AS SOON AS POSSIBLE (AND ALWAYS WITHIN 24 HOURS) FOLLOWING A STORM THAT CAUSES SURFACE EROSION, AND PERFORM NECESSARY MAINTENANCE.
2. FREQUENT OBSERVATIONS AND MAINTENANCE ARE NECESSARY TO MAINTAIN BMPs IN EFFECTIVE OPERATING CONDITION. INSPECTIONS AND CORRECTIVE MEASURES SHOULD BE DOCUMENTED THOROUGHLY.
3. WHERE BMPs HAVE FAILED, REPAIR OR REPLACEMENT SHOULD BE INITIATED UPON DISCOVERY OF THE FAILURE.
4. SEDIMENT ACCUMULATED UPSTREAM OF INLET PROTECTION SHALL BE REMOVED AS NECESSARY TO MAINTAIN BMP EFFECTIVENESS, TYPICALLY WHEN STORAGE VOLUME REACHES 50% OF CAPACITY, A DEPTH OF 6" WHEN SILT FENCE IS USED, OR ¼ OF THE HEIGHT FOR STRAW BALES.
5. INLET PROTECTION IS TO REMAIN IN PLACE UNTIL THE UPSTREAM DISTURBED AREA IS PERMANENTLY STABILIZED, UNLESS THE LOCAL JURISDICTION APPROVES EARLIER REMOVAL OF INLET PROTECTION IN STREETS.
6. WHEN INLET PROTECTION AT AREA INLETS IS REMOVED, THE DISTURBED AREA SHALL BE COVERED WITH TOP SOIL, SEEDED AND MULCHED, OR OTHERWISE STABILIZED IN A MANNER APPROVED BY THE LOCAL JURISDICTION.

(DETAIL ADAPTED FROM TOWN OF PARKER, COLORADO AND CITY OF AURORA, COLORADO, NOT AVAILABLE IN AUTOCAD)

NOTE: MANY JURISDICTIONS HAVE BMP DETAILS THAT VARY FROM UDFCD STANDARD DETAILS. CONSULT WITH LOCAL JURISDICTIONS AS TO WHICH DETAIL SHOULD BE USED WHEN DIFFERENCES ARE NOTED.

NOTE: THE DETAILS INCLUDED WITH THIS FACT SHEET SHOW COMMONLY USED, CONVENTIONAL METHODS OF INLET PROTECTION IN THE DENVER METROPOLITAN AREA. THERE ARE MANY PROPRIETARY INLET PROTECTION METHODS ON THE MARKET. UDFCD NEITHER ENDORSES NOR DISCOURAGES USE OF PROPRIETARY INLET PROTECTION; HOWEVER, IN THE EVENT PROPRIETARY METHODS ARE USED, THE APPROPRIATE DETAIL FROM THE MANUFACTURER MUST BE INCLUDED IN THE SWMP AND THE BMP MUST BE INSTALLED AND MAINTAINED AS SHOWN IN THE MANUFACTURER'S DETAILS.

NOTE: SOME MUNICIPALITIES DISCOURAGE OR PROHIBIT THE USE OF STRAW BALES FOR INLET PROTECTION. CHECK WITH LOCAL JURISDICTION TO DETERMINE IF STRAW BALE INLET PROTECTION IS ACCEPTABLE.

IP-8 Urban Drainage and Flood Control District Urban Storm Drainage Criteria Manual Volume 3 August 2013

Inlet Protection (IP) SC-6

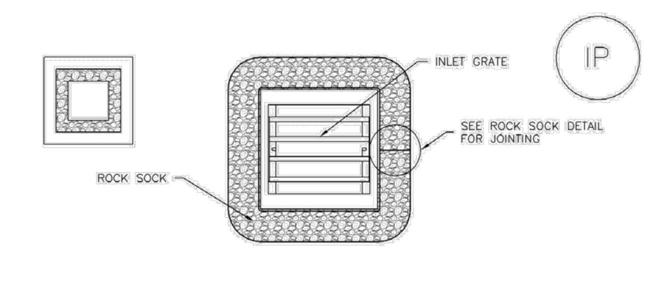

IP–3. ROCK SOCK SUMP/AREA INLET PROTECTION

ROCK SOCK SUMP/AREA INLET PROTECTION INSTALLATION NOTES
1. SEE ROCK SOCK DESIGN DETAIL FOR INSTALLATION REQUIREMENTS.
2. STRAW WATTLES/SEDIMENT CONTROL LOGS MAY BE USED IN PLACE OF ROCK SOCKS FOR INLETS IN PERVIOUS AREAS. INSTALL PER SEDIMENT CONTROL LOG DETAIL.

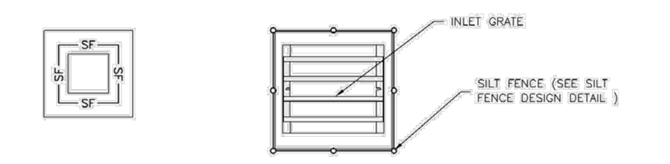

IP–4. SILT FENCE FOR SUMP INLET PROTECTION

SILT FENCE INLET PROTECTION INSTALLATION NOTES

1. SEE SILT FENCE DESIGN DETAIL FOR INSTALLATION REQUIREMENTS.
2. POSTS SHALL BE PLACED AT EACH CORNER OF THE INLET AND AROUND THE EDGES AT A MAXIMUM SPACING OF 3 FEET.
3. STRAW WATTLES/SEDIMENT CONTROL LOGS MAY BE USED IN PLACE OF SILT FENCE FOR INLETS IN PERVIOUS AREAS. INSTALL PER SEDIMENT CONTROL LOG DETAIL.

August 2013 Urban Drainage and Flood Control District Urban Storm Drainage Criteria Manual Volume 3 IP-5

NOTE:
THE CRITICAL ROOT ZONE (CRZ) OF A TREE IS WHERE THE MAJORITY OF A TREE'S ROOTS LAY. 85% OF MOST TREE ROOTS ARE FOUND IN THE TOP 24" OF THE SOIL AND SUPPLY THE MAJORITY OF NUTRIENTS AND WATER. GENERALLY, ROOTS SPREAD OUT 2–3X THE HEIGHT OF THE TREE.

NOTE:
CROWN OF THE TREE IS NEEDED FOR LEAF GROWTH TO PRODUCE OXYGEN, FILTER THE AIR, REDUCE WIND AND SOFTEN NOISE. DO NOT DISFIGURE CROWN WITH INTENSIVE PRUNING.

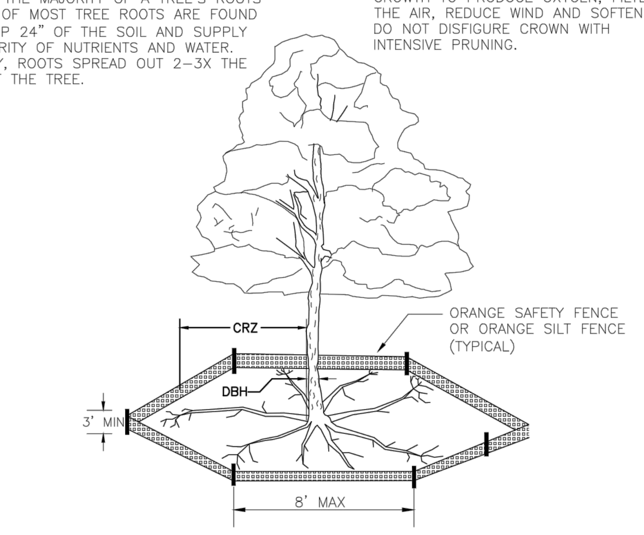

NOTES:
1. PROTECT CRITICAL ROOT ZONE (CRZ) OF TREES PRIOR TO CONSTRUCTION. CLEARLY MARK THE TREES AND ERECT A PROTECTIVE BARRIER AT THE CRZ. BARRIER SHALL BE MAINTAINED UNTIL CONSTRUCTION IS COMPLETE.
2. CRZ RADIUS IS 1 FT PER INCH OF TREE DIAMETER AT BREAST HEIGHT (DBH).
3. IF CONSTRUCTION OCCURS WITHIN THE CRZ, AT LEAST 12" OF MULCH AND/OR LOGGING MATTS SHALL BE PLACED WHERE MACHINERY MANEUVERS TO REDUCE SOIL COMPACTION IN THIS ZONE.
4. WHERE SIDEWALKS AND PATHWAYS PASS WITHIN CRZ, EXTRA CARE SHALL BE TAKEN TO AVOID DAMAGE TO THE ROOTS. ALTERNATE CONSTRUCTION METHODS, SUCH AS A REINFORCED SIDEWALK, SHALL BE IMPLEMENTED AS NECESSARY.
5. FOR ALL TREES, CUTTING OF LARGE STRUCTURAL ROOTS LOCATED NEAR THE BASE OF THE TRUNK IS PROHIBITED. DO NOT COMPACT SOIL BENEATH TREES. NO VEHICLE SHALL BE ALLOWED TO PARK UNDER TREES. NO MATERIALS OR EQUIPMENT SHALL BE STORED BENEATH TREES. DAMAGING THE BARK WITH LAWNMOWERS, CONSTRUCTION EQUIPMENT, OR ANYTHING ELSE IS PROHIBITED. CONTRACTOR SHALL REPAIR DAMAGE TO TREES.
6. FAILING TO INSTALL OR MAINTAIN PROTECTION MEASURES SHALL RESULT IN A STOP WORK ORDER AND FINE OF $500/DAY. DISTURBANCE OTHER THAN THAT ALLOWED ON THE APPROVED PLAN WILL REQUIRE OWNER TO POST A LETTER OF CREDIT FOR 3 YRS FOR TREE MITIGATION.

DATE: JAN, 2015	STANDARD DETAIL	CITY OF WILMINGTON NORTH CAROLINA
DRAWN BY JSR	TREE PROTECTION DURING CONSTRUCTION	CITY OF WILMINGTON ENGINEERING PO BOX 1810 WILMINGTON, NC 28402 (910) 341–7807
CHECKED BY RDG, P.E.		
SCALE NOT TO SCALE	SHEET 1 of 2	SD 15-09

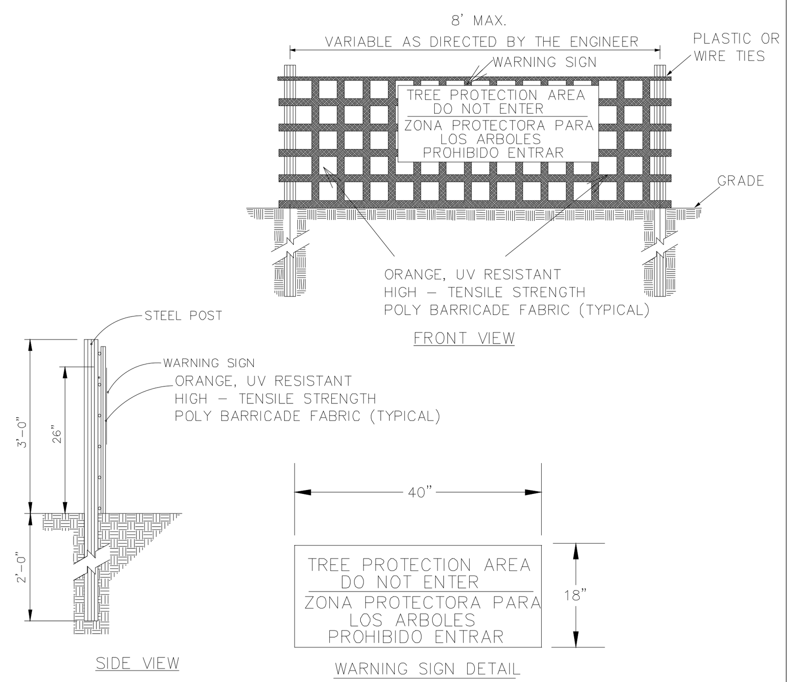

NOTES:

1. THE TREE PROTECTION FENCING SHALL NOT BE VIOLATED FOR THE ENTIRE DURATION OF THE PROJECT WITHOUT APPROVAL FROM URBAN FORESTRY STAFF.
2. WARNING SIGNS TO BE MADE OF DURABLE, WEATHERPROOF MATERIAL. LETTERS TO BE 3" HIGH, MINIMUM, CLEARLY LEGIBLE AND SPACED AS DETAILED.
3. SIGNS SHALL BE PLACED AT 50' MAXIMUM INTERVALS. PLACE A SIGN AT EACH END OF LINEAR TREE PROTECTION AND 50' ON CENTER THEREAFTER. FOR TREE PROTECTION AREAS LESS THAN 100' IN PERIMETER, PROVIDE NO LESS THAN TWO SIGNS PER PROTECTION AREA.
4. ATTACH SIGNS SECURELY TO FENCE POSTS AND FABRIC. MAINTAIN TREE PROTECTION FENCE AND SIGNS THROUGHOUT DURATION OF PROJECT.
5. TREE PROTECTION FENCING AND SIGNAGE SHALL BE REMOVED AFTER CONSTRUCTION.
6. ADDITIONAL SIGNS MAY BE REQUIRED BY CITY OF WILMINGTON, BASED ON ACTUAL FIELD CONDITIONS.

DATE: JAN, 2015	STANDARD DETAIL	
DRAWN BY JSR	TREE PROTECTION DURING CONSTRUCTION	CITY OF WILMINGTON ENGINEERING PO BOX 1810 WILMINGTON, NC 28402 (910) 341–7807
CHECKED BY RDG, P.E.		
SCALE NOT TO SCALE	SHEET 2 of 2	SD 15-09

Stabilized Staging Area (SSA) SM-6

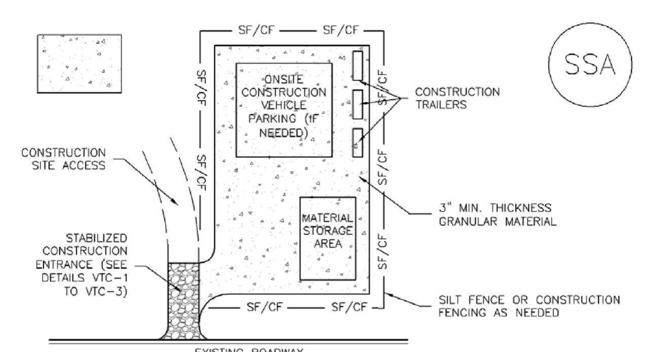

SSA–1. STABILIZED STAGING AREA

STABILIZED STAGING AREA INSTALLATION NOTES

1. SEE PLAN VIEW FOR
   –LOCATION OF STAGING AREA(S).
   –CONTRACTOR MAY ADJUST LOCATION AND SIZE OF STAGING AREA WITH APPROVAL FROM THE LOCAL JURISDICTION.
2. STABILIZED STAGING AREA SHOULD BE APPROPRIATE FOR THE NEEDS OF THE SITE. OVERSIZING RESULTS IN A LARGER AREA TO STABILIZE FOLLOWING CONSTRUCTION.
3. STAGING AREA SHALL BE STABILIZED PRIOR TO OTHER OPERATIONS ON THE SITE.
4. THE STABILIZED STAGING AREA SHALL CONSIST OF A MINIMUM 3" THICK GRANULAR MATERIAL.
5. UNLESS OTHERWISE SPECIFIED BY LOCAL JURISDICTION, ROCK SHALL CONSIST OF DOT SECT. #703, AASHTO #3 COARSE AGGREGATE OR 6" (MINUS) ROCK.
6. ADDITIONAL PERIMETER BMPs MAY BE REQUIRED INCLUDING BUT NOT LIMITED TO SILT FENCE AND CONSTRUCTION FENCING.

STABILIZED STAGING AREA MAINTENANCE NOTES

1. INSPECT BMPs EACH WORKDAY, AND MAINTAIN THEM IN EFFECTIVE OPERATING CONDITION. MAINTENANCE OF BMPs SHOULD BE PROACTIVE, NOT REACTIVE. INSPECT BMPs AS SOON AS POSSIBLE (AND ALWAYS WITHIN 24 HOURS) FOLLOWING A STORM THAT CAUSES SURFACE EROSION, AND PERFORM NECESSARY MAINTENANCE.
2. FREQUENT OBSERVATIONS AND MAINTENANCE ARE NECESSARY TO MAINTAIN BMPs IN EFFECTIVE OPERATING CONDITION. INSPECTIONS AND CORRECTIVE MEASURES SHOULD BE DOCUMENTED THOROUGHLY.
3. WHERE BMPs HAVE FAILED, REPAIR OR REPLACEMENT SHOULD BE INITIATED UPON DISCOVERY OF THE FAILURE.
4. ROCK SHALL BE REAPPLIED OR REGRADED AS NECESSARY IF RUTTING OCCURS OR UNDERLYING SUBGRADE BECOMES EXPOSED.

November 2010 Urban Drainage and Flood Control District Urban Storm Drainage Criteria Manual Volume 3 SSA-3

SM-6 Stabilized Staging Area (SSA)

STABILIZED STAGING AREA MAINTENANCE NOTES

5. STABILIZED STAGING AREA SHALL BE ENLARGED IF NECESSARY TO CONTAIN PARKING, STORAGE, AND UNLOADING/LOADING OPERATIONS.
6. THE STABILIZED STAGING AREA SHALL BE REMOVED AT THE END OF CONSTRUCTION. THE GRANULAR MATERIAL SHALL BE REMOVED OR, IF APPROVED BY THE LOCAL JURISDICTION, USED ON SITE, AND THE AREA COVERED WITH TOPSOIL, SEEDED AND MULCHED OR OTHERWISE STABILIZED IN A MANNER APPROVED BY LOCAL JURISDICTION.

NOTE: MANY MUNICIPALITIES PROHIBIT THE USE OF RECYCLED CONCRETE AS GRANULAR MATERIAL FOR STABILIZED STAGING AREAS DUE TO DIFFICULTIES WITH RE–ESTABLISHMENT OF VEGETATION IN AREAS WHERE RECYCLED CONCRETE WAS PLACED.

NOTE: MANY JURISDICTIONS HAVE BMP DETAILS THAT VARY FROM UDFCD STANDARD DETAILS. CONSULT WITH LOCAL JURISDICTIONS AS TO WHICH DETAIL SHOULD BE USED WHEN DIFFERENCES ARE NOTED.

(DETAILS ADAPTED FROM DOUGLAS COUNTY, COLORADO, NOT AVAILABLE IN AUTOCAD)

SSA-4 Urban Drainage and Flood Control District Urban Storm Drainage Criteria Manual Volume 3 November 2010

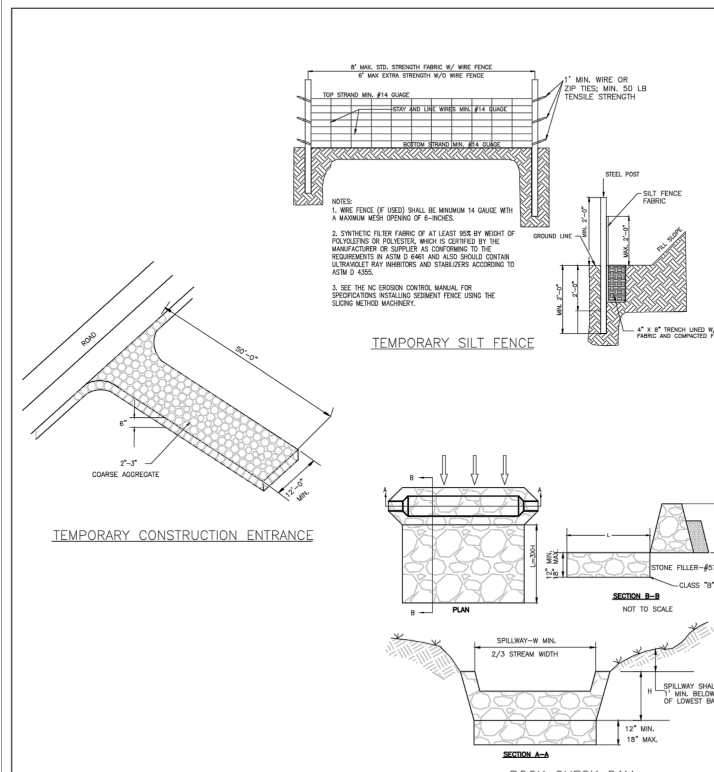

LAND DISTURBING ACTIVITIES MUST BE MANAGED TO AVOID SEDIMENT RUN–OFF AND POLLUTION FROM CONSTRUCTION SITES.

WHERE PERMITTED LOCALLY BY NEW HANOVER COUNTY, AN EROSION AND SEDIMENT CONTROL (E&SC) PLAN WILL CONTAIN DETAILS AND GUIDANCE. E&SC PLANS ARE PERFORMANCE BASED AND OFTEN REQUIRE ADJUSTMENTS OR REPAIRS.

AS PERMITTED BY NCDENR, DIVISIONS OF WATER QUALITY AND LAND RESOURCES, A STORMWATER PERMIT WILL REQUIRE SELF–MONITORING REPORTS (WEEKLY, >1" RAIN EVENT) OR SELF–INSPECTION REPORTS AFTER EACH CONSTRUCTION PHASE, BASED ON ELEMENTS OF THE E&SC PLAN.

DATE: SEPTEMBER, 2012	STANDARD DETAIL	CITY OF WILMINGTON NORTH CAROLINA
DRAWN BY JSR	GUIDELINES FOR SEDIMENT CONTROL BMPs	CITY OF WILMINGTON ENGINEERING PO BOX 1810 WILMINGTON, NC 28402 (910) 341–7807
CHECKED BY BDR, P.E.		
SCALE NOT TO SCALE	SHEET 1 OF 2	SD 3-104

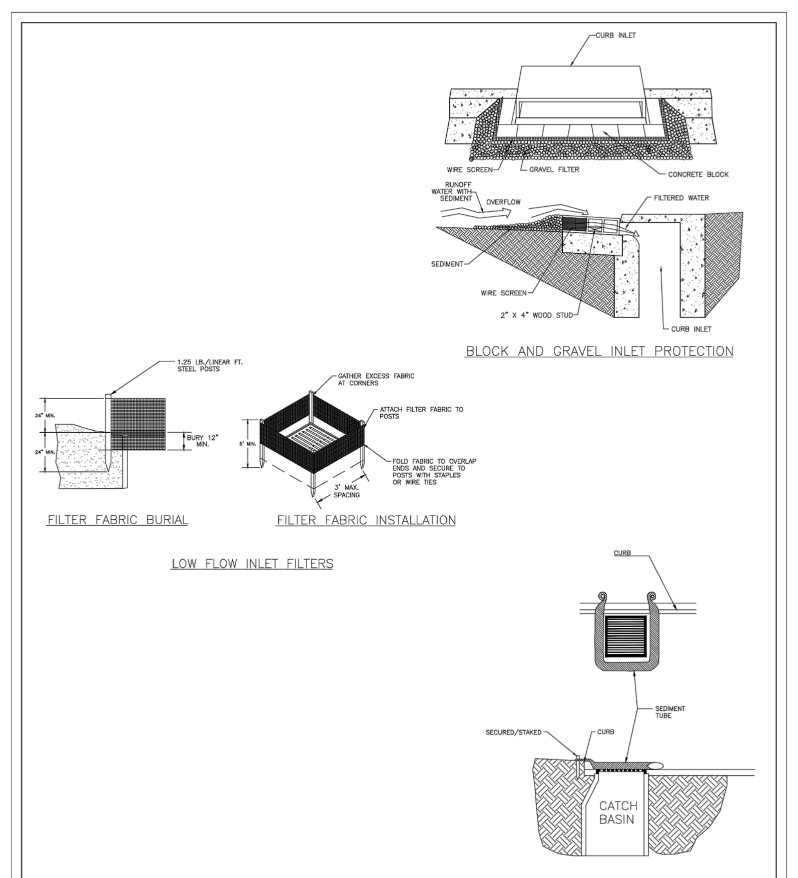

DATE: SEPTEMBER, 2012	STANDARD DETAIL	CITY OF WILMINGTON NORTH CAROLINA
DRAWN BY JSR	GUIDELINES FOR SEDIMENT CONTROL BMPs	CITY OF WILMINGTON ENGINEERING PO BOX 1810 WILMINGTON, NC 28402 (910) 341–7807
CHECKED BY BDR, P.E.		
SCALE NOT TO SCALE	SHEET 2 OF 2	SD 3-104

CITY OF WILMINGTON NORTH CAROLINA
Public Services Engineering Division
APPROVED STORMWATER MANAGEMENT PLAN
Date: ____________ Permit #____________
Signed: ________________________________

Approved Construction Plan

	Name	Date
Planning		
Traffic		
Fire		

GreenbergFarrow
COA#:
1430 W. Peachtree St. NW
Suite 200
Atlanta, GA 30309
t: 404 601 4000 f: 404 601 3970

PROJECT TEAM

COPYRIGHT NOTICE
This drawing is the property of the above referenced Professional and is not to be used for any purpose other than the specific project and site named herein, and cannot be reproduced in any manner without the express written permission from the Professional

ISSUE/REVISION RECORD

DATE	DESCRIPTION
10–20–15	SITE PLAN
12–02–15	DP SUBMITTAL
02–03–16	NCDOT RESUBMITTAL
02–03–16	COW SITE RESUBMITTAL

NORTH CAROLINA PROFESSIONAL SEAL ENGINEER JOHN H. NOURZAD
2/3/16

PROFESSIONAL IN CHARGE
JOHN NOURZAD
PROFESSIONAL ENGINEER
LICENSE NO. 023207

PROJECT MANAGER
LARRY DIEHL

QUALITY CONTROL
FEDERICO OLIVARES, PE

DRAWN BY
RYAN SCOTT, EIT

PROJECT NAME
CIRCLE K CAROLINA BEACH

WILMINGTON
NORTH CAROLINA

3739 CAROLINA BEACH RD
WILMINGTON, NC

PROJECT NUMBER
20151091

SHEET TITLE
EROSION CONTROL DETAILS

SHEET NUMBER
C-5.2

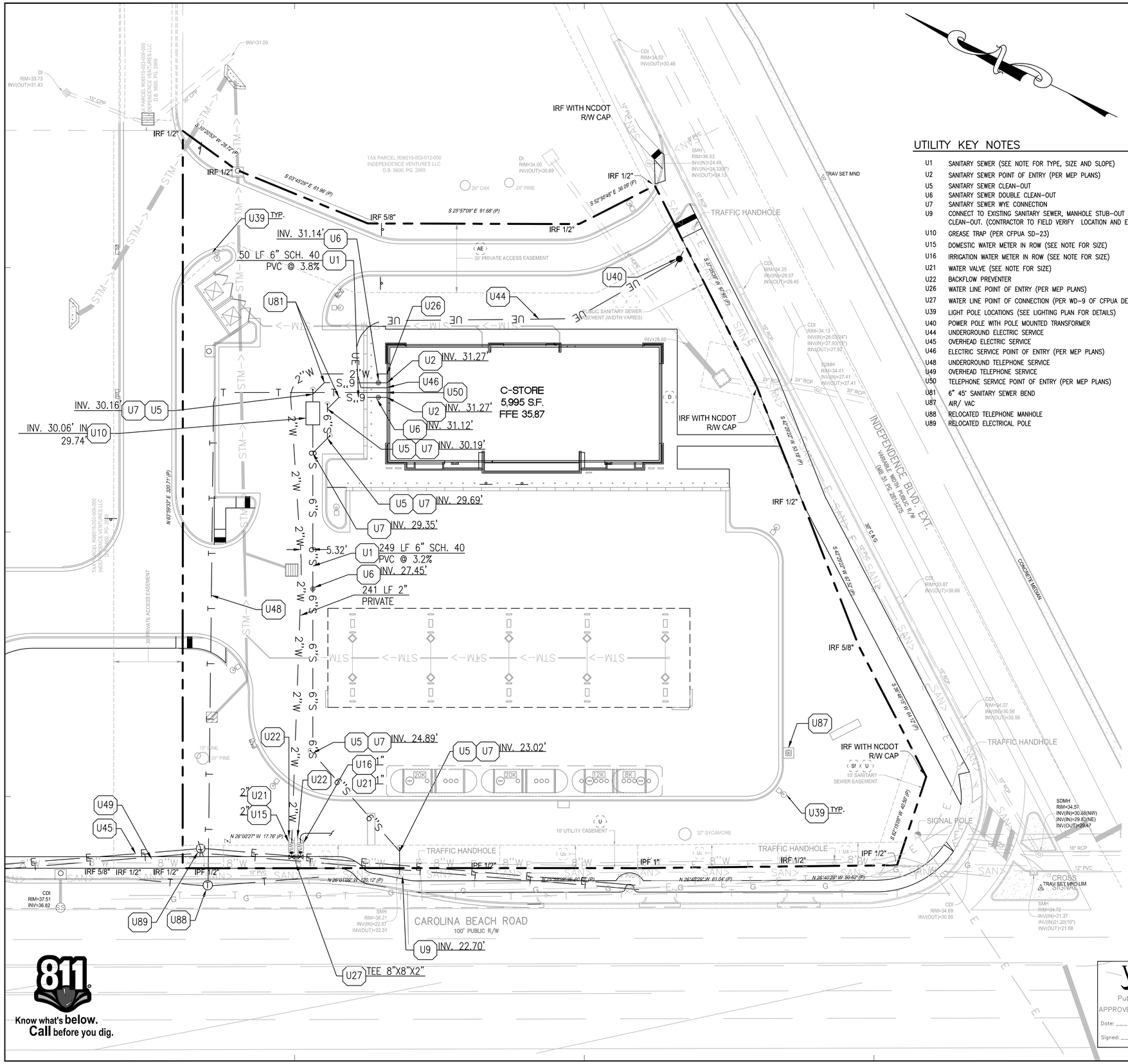

UTILITY KEY NOTES

U1	SANITARY SEWER (SEE NOTE FOR TYPE, SIZE AND SLOPE)
U2	SANITARY SEWER POINT OF ENTRY (PER MEP PLANS)
U5	SANITARY SEWER CLEAN-OUT
U6	SANITARY SEWER DOUBLE CLEAN-OUT
U7	SANITARY SEWER WYE CONNECTION
U9	CONNECT TO EXISTING SANITARY SEWER, MANHOLE STUB-OUT OR CLEAN-OUT. (CONTRACTOR TO FIELD VERIFY LOCATION AND ELEVATION)
U10	GREASE TRAP (PER CFPUA SD-23)
U15	DOMESTIC WATER METER IN ROW (SEE NOTE FOR SIZE)
U16	IRRIGATION WATER METER IN ROW (SEE NOTE FOR SIZE)
U21	WATER VALVE (SEE NOTE FOR SIZE)
U22	BACKFLOW PREVENTER
U26	WATER LINE POINT OF ENTRY (PER MEP PLANS)
U27	WATER LINE POINT OF CONNECTION (PER WD-9 OF CFPUA DETAIL)
U39	LIGHT POLE LOCATIONS (SEE LIGHTING PLAN FOR DETAILS)
U40	POWER POLE WITH POLE MOUNTED TRANSFORMER
U44	UNDERGROUND ELECTRIC SERVICE
U45	OVERHEAD ELECTRIC SERVICE
U46	ELECTRIC SERVICE POINT OF ENTRY (PER MEP PLANS)
U48	UNDERGROUND TELEPHONE SERVICE
U49	OVERHEAD TELEPHONE SERVICE
U50	TELEPHONE SERVICE POINT OF ENTRY (PER MEP PLANS)
U81	6" 45° SANITARY SEWER BEND
U87	AIR/ VAC
U88	RELOCATED TELEPHONE MANHOLE
U89	RELOCATED ELECTRICAL POLE

GRAPHIC SCALE

20 0 10 20 40 80

(IN FEET)
1 inch = 20 ft.

EXISTING LEGEND:

- INDEX CONTOUR
- INTERMEDIATE CONTOUR
- EDGE OF PAVEMENT
- CURB AND GUTTER
- PROPERTY LINE
- ADJOINER PROPERTY LINE (NOT SURVEYED)
- SWALE / DITCH LINE
- SANITARY SEWER
- STORM SEWER
- OVERHEAD ELECTRIC
- UNDERGROUND COMMUNICATION SERVICE
- UNDERGROUND GAS SERVICE
- UNDERGROUND ELECTRIC SERVICE
- WATER
- IRF IRON REBAR FOUND
- IPF IRON PIPE FOUND
- (P) / (F) PLAT / FIELD
- UTILITY POLE
- GUY ANCHOR WIRE
- SIGN
- CURB DRAIN INLET (CDI)/DRAIN INLET (DI)
- STORM DRAIN MANHOLE (SDMH)
- SANITARY SEWER MANHOLE (SMH)
- WATER VALVE & BACK PREVENTER VALVE
- WATER METER
- FIRE HYDRANT (HYD.)
- 18" OAK TREE TRUNK
- CONCRETE
- END SECTIONS

PROPOSED LEGEND:

- PROPERTY LINE
- PROPOSED CURB & GUTTER
- G GAS LINES
- T TELEPHONE LINES
- 6"S 6"S SANITARY SEWER LINES
- W WATER LINES
- UE UNDERGROUND ELECTRIC LINES
- DOUBLE CLEAN OUT
- CLEAN OUT
- LIGHT POLES

NOTE: ALL PROPOSED FLOWLINES HAVE A BASE ELEVATION OF XXXX.XX FEET

GENERAL UTILITY NOTES:

1. CONTRACTOR IS TO VERIFY THE LOCATION OF ALL EXISTING UTILITIES PRIOR TO CONSTRUCTION AND ENSURE NO CONFLICTS EXIST WITH PROPOSED IMPROVEMENTS. NOTIFY ENGINEER IMMEDIATELY IF UTILITIES ARE LOCATED DIFFERENTLY THAN SHOWN. THE CONTRACTOR SHALL COORDINATE WITH EACH RESPECTIVE UTILITY COMPANY IN ORDER TO RELOCATE IF NEEDED IN CONFORMANCE WITH THEIR GUIDELINES.

2. CONTRACTOR SHALL NOTIFY AND COORDINATE WITH THE APPROPRIATE UTILITY COMPANY PRIOR TO THE REMOVAL OF INDICATED UTILITIES ON SITE (SEE DEMOLITION PLAN). CONTRACTOR SHALL BE RESPONSIBLE FOR OBTAINING ANY PERMITS REQUIRED FOR DEMOLITION AND HAUL OFF FROM THE APPROPRIATE AUTHORITIES.

3. AUTHORIZATION MUST BE OBTAINED FROM THE CAP FEAR PUBLIC UTILITY AUTHORITY TO CONSTRUCT, ALTER OR MODIFY A WATER OR SEWER LINE.
   – APPROVAL OF SUBMITTED PLANS.

4. AT THE COMPLETION OF THE WATER AND/OR SEWER CONSTRUCTION AND PRIOR TO RECORDING THE FINAL PLAT, THE CONTRACTOR WILL FURNISH THE WATER SYSTEM INSPECTOR RECORD DRAWINGS OF THE PROJECT.

5. BUILDING CONTRACTOR SHALL BE RESPONSIBLE FOR COORDINATION WITH THE GAS COMPANY FOR THE CONSTRUCTION OF THE GAS LINE BETWEEN METER AND MAIN.

6. BUILDING CONTRACTOR SHALL BE RESPONSIBLE FOR COORDINATION WITH THE POWER COMPANY FOR THE CONSTRUCTION OF ELECTRICAL CONDUIT TO PROVIDE SERVICE TO THE TRANSFORMER.

7. THE CONTRACTOR SHALL BE RESPONSIBLE FOR VERIFYING, PRIOR TO CONSTRUCTION, ALL EXISTING LOCATIONS AND INVERT ELEVATIONS OF SANITARY SEWERS, STORM DRAINAGE, AND WATER MAINS. IF ANY INVERT ELEVATION VARIES MORE THAN 0.1 FT. FROM RECORD ELEVATIONS, THE CONTRACTOR SHALL NOTIFY THE ENGINEER IMMEDIATELY. WORK SHALL NOT PROCEED UNTIL THE CONTRACTOR IS NOTIFIED BY THE ENGINEER.

8. CONNECT TO EXISTING UTILITIES AND INSTALL UTILITIES IN COMPLIANCE WITH REQUIREMENTS OF APPROPRIATE JURISDICTIONAL AGENCIES.

9. COORDINATE WITH BUILDING PLANS TO ASSURE ACCURACY OF UTILITY CONNECTIONS AND COMPLIANCE WITH LOCAL CODES.

10. ALL SEWERS TO BE MAINTAINED THROUGHOUT CONSTRUCTION, INCLUDING CLEANING OF ANY SILT OR DEBRIS ACCUMULATED IN STRUCTURES.

11. ALL SURPLUS EXCAVATED MATERIAL FROM THE TRENCH SHALL BE DISPOSED OFF THE SITE BY CONTRACTOR.

12. COORDINATE EXACT TRENCHING, ROUTING, AND POINT OF TERMINATION WITH ALL UTILITY COMPANIES.

13. THE CONTRACTOR IS RESPONSIBLE FOR OBTAINING UTILITY LOCATES.

CITY OF WILMINGTON NORTH CAROLINA
Public Services Engineering Division
APPROVED STORMWATER MANAGEMENT PLAN
Date: _____ Permit #_____
Signed: _____

Approved Construction Plan

	Name	Date
Planning		
Traffic		
Fire		

GreenbergFarrow
COA#:
1430 W. Peachtree St. NW
Suite 200
Atlanta, GA 30309
t: 404 601 4000 f: 404 601 3970

PROJECT TEAM

COPYRIGHT NOTICE
This drawing is the property of the above referenced Professional and is not to be used for any purpose other than the specific project and site named herein, and cannot be reproduced in any manner without the express written permission from the Professional

ISSUE/REVISION RECORD

DATE	DESCRIPTION
10-20-15	SITE PLAN
12-02-15	DP SUBMITTAL
02-03-16	NCDOT RESUBMITTAL
02-03-16	COW SITE RESUBMITTAL

PROFESSIONAL SEAL

NORTH CAROLINA PROFESSIONAL SEAL ENGINEER JOHN H. NOURZAD
2/3/16

PROFESSIONAL IN CHARGE
JOHN NOURZAD
PROFESSIONAL ENGINEER
LICENSE NO. 023207

PROJECT MANAGER
LARRY DIEHL

QUALITY CONTROL
FEDERICO OLIVARES, PE

DRAWN BY
RYAN SCOTT, EIT

PROJECT NAME

CIRCLE K CAROLINA BEACH

WILMINGTON NORTH CAROLINA

3739 CAROLINA BEACH RD WILMINGTON, NC

PROJECT NUMBER
20151091

SHEET TITLE

UTILITY PLAN

SHEET NUMBER

C-6.0

NOT ISSUED FOR CONSTRUCTION

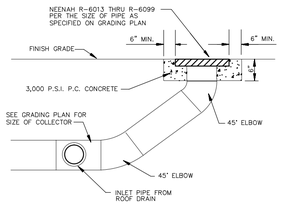

STORM DRAIN CLEAN-OUT
N.T.S.

Approved Construction Plan

	Name	Date
Planning		
Traffic		
Fire		

CITY OF WILMINGTON NORTH CAROLINA
Public Services Engineering Division
APPROVED STORMWATER MANAGEMENT PLAN
Date: _____ Permit #_____
Signed: _____

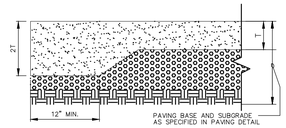

THICKENED EDGE OF PAVING
N.T.S.

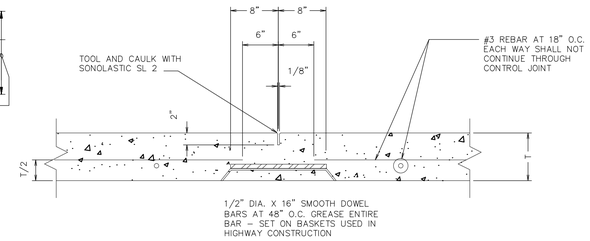

CONTROL JOINT
N.T.S.

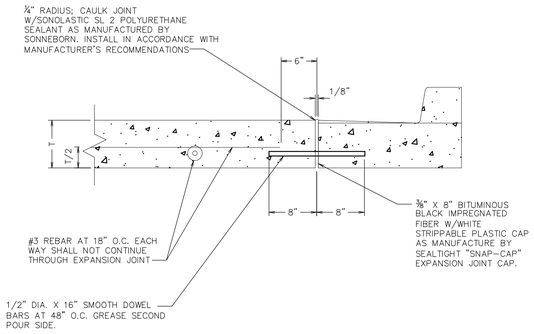

EXPANSION JOINT
N.T.S.

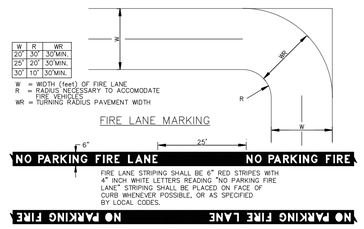

W	R	WR
20'	30'	30'MIN.
25'	20'	30'MIN.
30'	10'	30'MIN.

W = WIDTH (feet) OF FIRE LANE
R = RADIUS NECESSARY TO ACCOMODATE FIRE VEHICLE
WR = TURNING RADIUS PAVEMENT WIDTH

FIRE LANE MARKING

FIRE LANE MARKING
N.T.S.

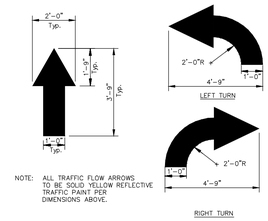

NOTE: ALL TRAFFIC FLOW ARROWS TO BE SOLID YELLOW REFLECTIVE TRAFFIC PAINT PER DIMENSIONS ABOVE.

TRAFFIC FLOW ARROW
N.T.S.

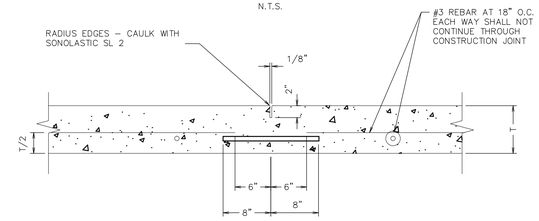

CONSTRUCTION JOINT
N.T.S.

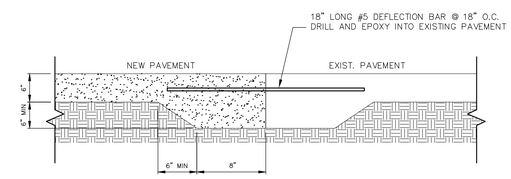

CONNECTION TO EXIST. CONCRETE PAVING
N.T.S.

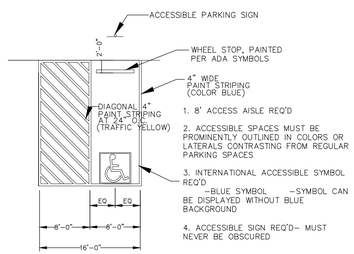

1. 8' ACCESS AISLE REQ'D
2. ACCESSIBLE SPACES MUST BE PROMINENTLY OUTLINED IN COLORS OR LATERALS CONTRASTING FROM REGULAR PARKING SPACES
3. INTERNATIONAL ACCESSIBLE SYMBOL REQ'D –BLUE SYMBOL –SYMBOL CAN BE DISPLAYED WITHOUT BLUE BACKGROUND
4. ACCESSIBLE SIGN REQ'D– MUST NEVER BE OBSCURED

*2% MAX. SLOPE EACH WAY

ACCESSIBLE PARKING STALL
N.T.S.

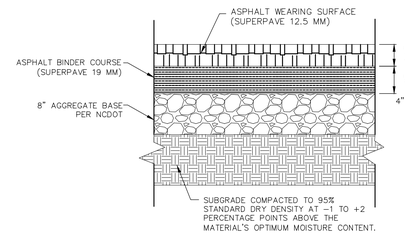

HEAVY DUTY FLEXIBLE ASPHALT PAVEMENT
N.T.S.

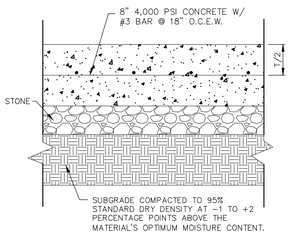

HEAVY DUTY CONCRETE PAVING
N.T.S.

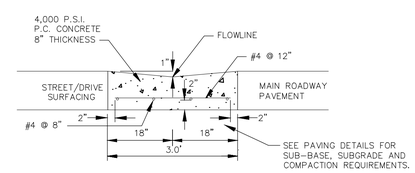

CONCRETE VALLEY GUTTER
N.T.S.

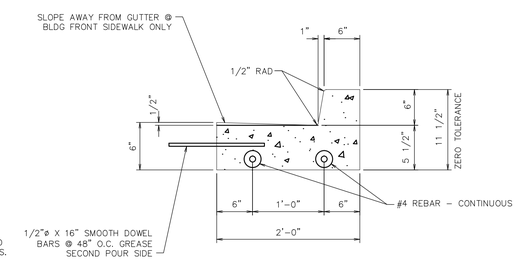

CONCRETE CURB & GUTTER
N.T.S.

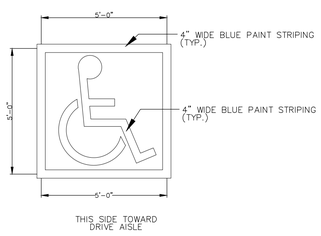

ACCESSIBLE PARKING SYMBOL
N.T.S.

PAVING NOTES:

1. CONCRETE SHALL BE AIR-ENTRAINED WITH 6% (+/-1%) AIR WITH MINIMUM CEMENT CONTENT OF 6 SACKS PER CUBIC YARD.
2. SUBGRADE SOIL SHALL BE SCARIFIED TO A DEPTH OF AT LEAST 12".
3. PAVING MATERIALS AND PROCEDURES SHOULD CONFORM TO THE LATEST EDITION OF THE NORTH CAROLINA DEPARTMENT OF TRANSPORTATION, "STANDARD SPECIFICATIONS FOR ROAD AND BRIDGE CONSTRUCTION"

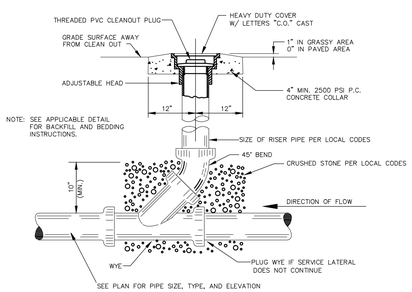

SANITARY SEWER CLEAN-OUT
N.T.S.

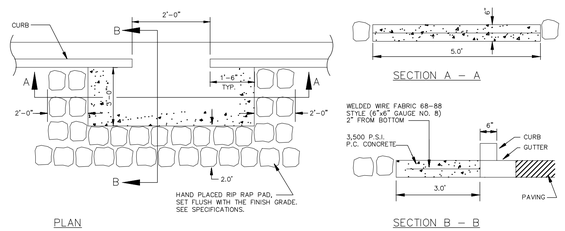

CURB CUT
N.T.S.

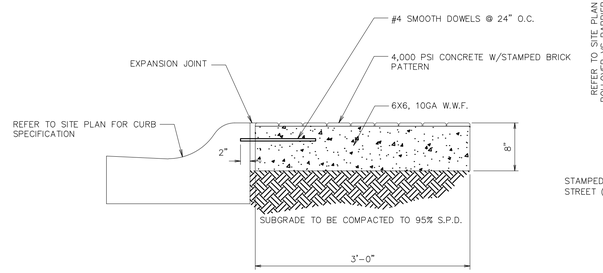

RADIUS PROTECTOR SECTION
N.T.S.

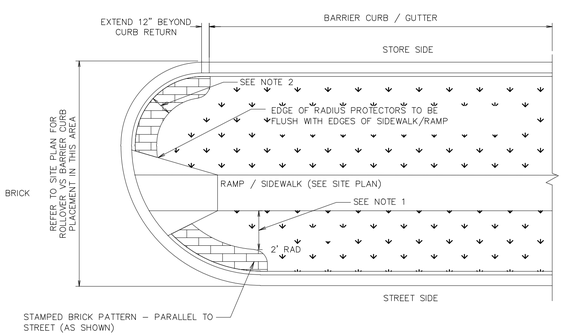

** NOTES **
1. IF DISTANCE FROM PAVER TO SIDEWALK IS LESS THAN 2', PLACE PAVERS TO SIDEWALK.
2. 3' UNLESS NOTED OTHERWISE ON SITE PLAN.
3. CONCRETE FOR STAMPED BRICK PATTERN RADIUS PROTECTOR SHOULD BE "RED" PER ASTM C979 STANDARD

RADIUS PROTECTOR PLAN
N.T.S.

GreenbergFarrow
COA#:
1430 W. Peachtree St. NW
Suite 200
Atlanta, GA 30309
t: 404 601 4000 f: 404 601 3970

PROJECT TEAM

COPYRIGHT NOTICE
This drawing is the property of the above referenced Professional and is not to be used for any purpose other than the specific project and site named herein, and cannot be reproduced in any manner without the express written permission from the Professional

ISSUE/REVISION RECORD

DATE	DESCRIPTION
10-20-15	SITE PLAN
12-02-15	DP SUBMITTAL
02-03-16	NCDOT RESUBMITTAL
02-03-16	COW SITE RESUBMITTAL

NORTH CAROLINA PROFESSIONAL SEAL ENGINEER JOHN H. NOURZAD
2/3/16

PROFESSIONAL IN CHARGE
JOHN NOURZAD
PROFESSIONAL ENGINEER
LICENSE NO. 023207
PROJECT MANAGER
LARRY DIEHL
QUALITY CONTROL
FEDERICO OLIVARES, PE
DRAWN BY
RYAN SCOTT, EIT

PROJECT NAME

CIRCLE K CAROLINA BEACH

WILMINGTON NORTH CAROLINA

3739 CAROLINA BEACH RD WILMINGTON, NC

PROJECT NUMBER
20151091

SHEET TITLE

DETAIL SHEET

SHEET NUMBER

C-7.0

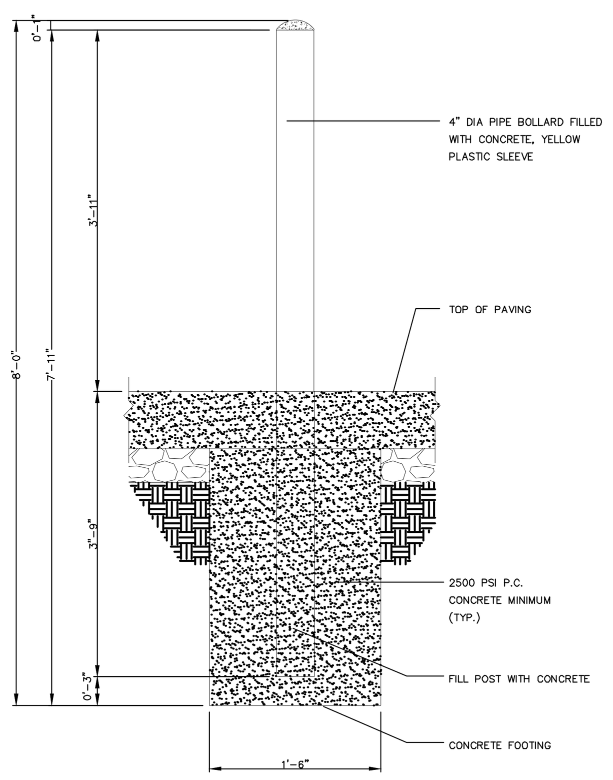

BOLLARD DETAIL

N.T.S.

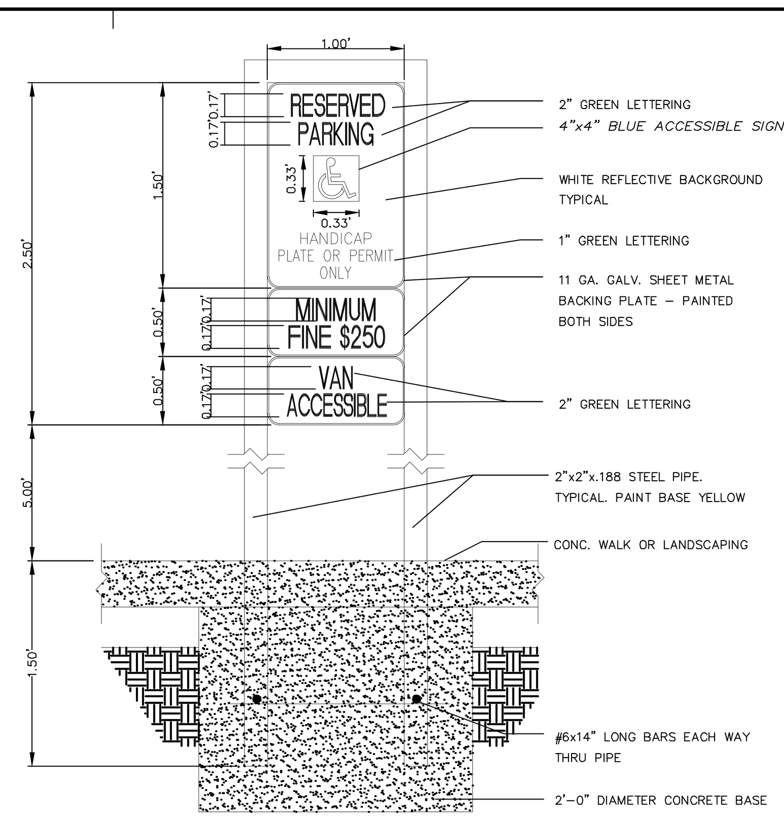

HANDICAP ACCESSIBLE SIGN

N.T.S.

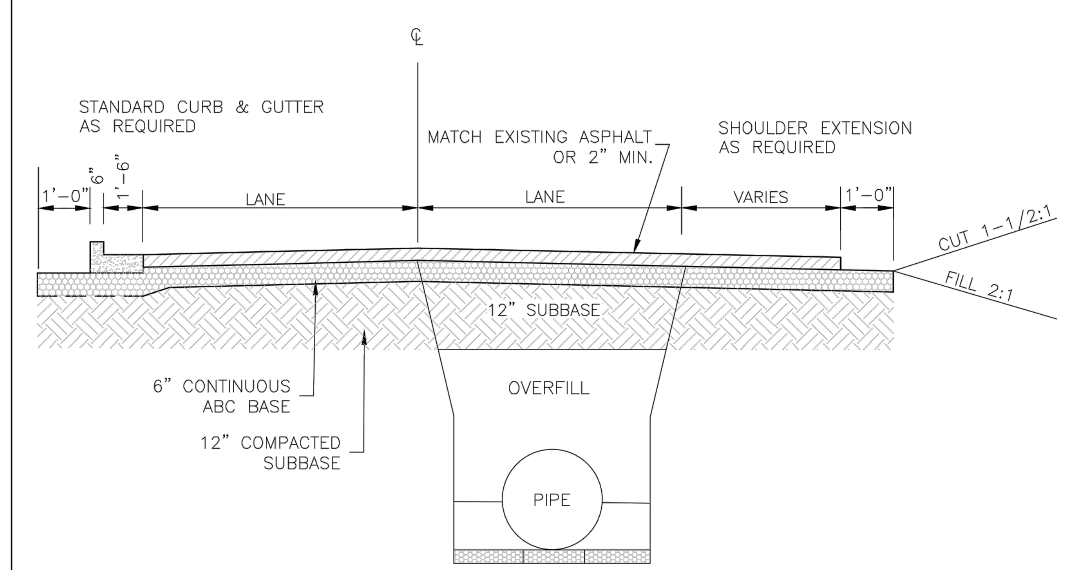

NOTES:
1. PAVEMENT RESTORATION DESIGN IS DEPENDENT ON CITY STREET CUT POLICY AND PERMITTED CONDITIONS.
2. PIPE TRENCH AND COMPACTION REQUIREMENTS PER SPECIFICATIONS. SEE SD 1–07 AND SD1–05.

STANDARD DETAIL		
DATE: MAY, 2013 DRAWN BY JSR CHECKED BY B.R., P.E. SCALE NOT TO SCALE	TYPICAL ROAD REBUILD	CITY OF WILMINGTON NORTH CAROLINA CITY OF WILMINGTON ENGINEERING 212 OPERATIONS CENTER DR. WILMINGTON, NC 28412 (910) 341–7807 SD 1-04

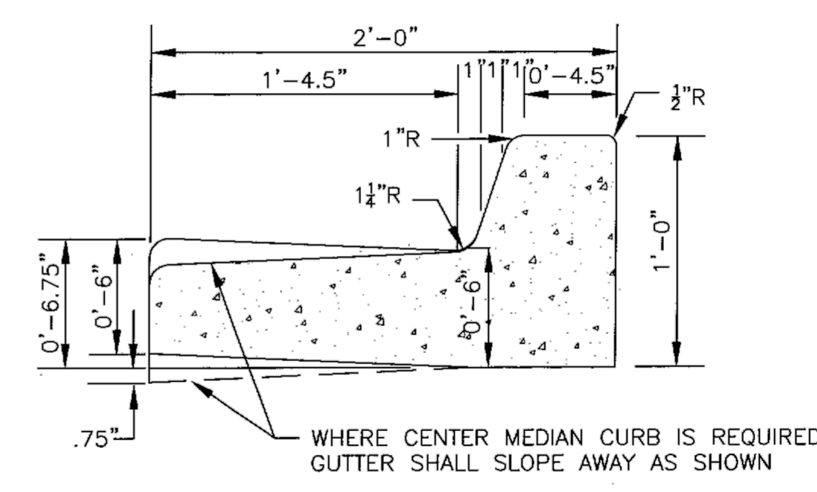

STANDARD CURB SECTION TYPE "A"

STANDARD DETAIL		
DATE: 2001 DRAWN BY JSR/CMR CHECKED BY B.P., P.E. SCALE NOT TO SCALE	CURB SECTION TYPE "A"	CITY OF WILMINGTON ENGINEERING OFFICE 305 CHESTNUT STREET PO. BOX 1810 WILMINGTON N.C. 28402 (910) 341–7807 SD 7-01

STATE OF NORTH CAROLINA DEPT. OF TRANSPORTATION DIVISION OF HIGHWAYS RALEIGH, N.C.

1-12

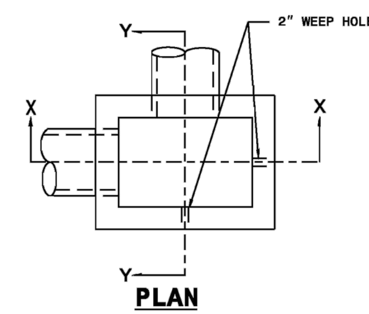

PLAN

WITH GRATE & FRAME REMOVED

GENERAL NOTES:

USE CLASS "B" CONCRETE THROUGHOUT.

PROVIDE ALL DROP INLETS OVER 3'-6" IN DEPTH WITH STEPS 12" ON CENTER. USE STEPS WHICH COMPLY WITH STD. DRAWING 840.66.

OPTIONAL CONSTRUCTION - MONOLITHIC POUR 2" KEYWAY OR #4 BAR DOWELS AT 12" CENTERS AS DIRECTED BY THE ENGINEER.

USE FORMS FOR THE CONSTRUCTION OF THE BOTTOM SLAB.

IF REINFORCED CONCRETE PIPE IS SET IN BOTTOM SLAB OF BOX, ADD TO SLAB AS SHOWN ON STD. NO. 840.00.

CONSTRUCT WITH PIPE CROWNS MATCHING.

SEE STANDARD DRAWING 840.25 FOR ATTACHMENT OF FRAMES AND GRATES NOT SHOWN.

INSTALL 2" WEEPHOLES AS DIRECTED BY THE ENGINEER.

INSTALL STONE DRAINS, OF A MINIMUM OF 1 CUBIC FOOT OF NO. 78M STONE IN A POROUS FABRIC BAG OR WRAP, AT EACH WEEP HOLE OR AS DIRECTED BY THE ENGINEER.

CHAMFER ALL EXPOSED CORNERS 1".

DRAWING NOT TO SCALE.

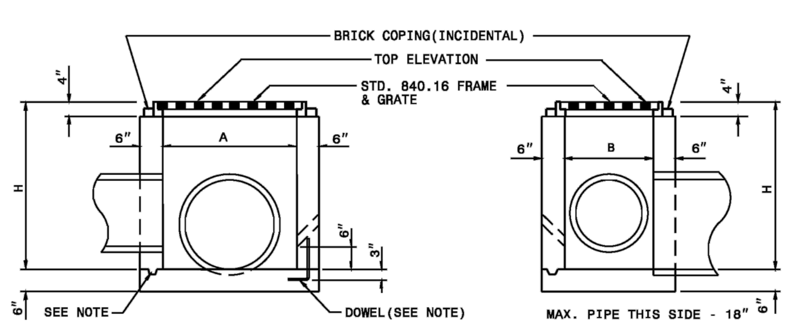

SECTION X-X **SECTION Y-Y**

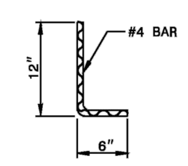

DOWEL

DIMENSIONS AND QUANTITIES FOR DROP INLET(BASED ON MIN. HEIGHT, H)

DIMENSIONS OF BOX & PIPE				CUBIC YARDS CONC. IN BOX			DEDUCTIONS FOR ONE PIPE	
PIPE	SPAN	WIDTH	MIN. HEIGHT					
D	A	B	H	BOTTOM SLAB	WALL PER FT. HT.	TOTAL CONCRETE FOR MINIMUM HEIGHT, H	C.M.	R.C.
12"	3'-0"	2'-0"	2'-0"	0.222	0.222	0.592	0.015	0.026
15"			2'-3"			0.648	0.023	0.036
18"			2'-6"			0.703	0.033	0.049
24"			3'-0"			0.814	0.059	0.085
30"	3'-0"	2'-0"	3'-6"	0.222	0.222	0.925	0.092	0.127

ENGLISH STANDARD DRAWING FOR **CONCRETE DROP INLET** 12" THRU 30" PIPE

SHEET 1 OF 1

840.14

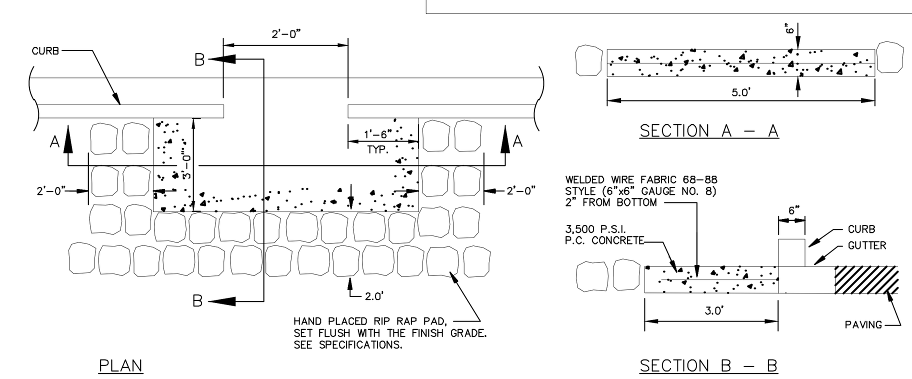

CURB CUT

N.T.S.

Approved Construction Plan

	Name	Date
Planning		
Traffic		
Fire		

CITY OF WILMINGTON NORTH CAROLINA

Public Services Engineering Division

APPROVED STORMWATER MANAGEMENT PLAN

Date: ____________ Permit #____________

Signed: ________________________________

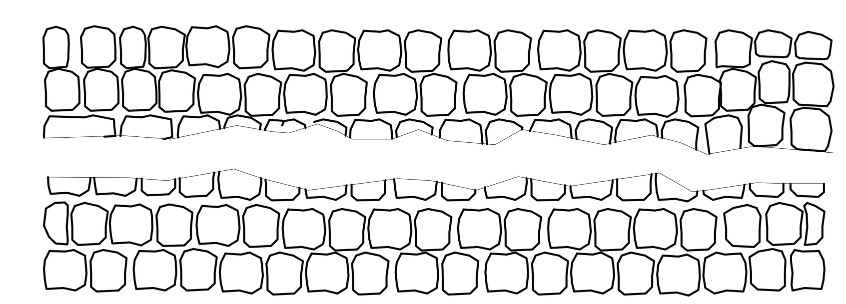

PLACE RIP-RAP IN ALL AREAS INDICATED ON THE DRAWING.THE STONE SHALL CONSIST OF FIELD STONE OR ROUGH, UNHEWN QUARRY STONE AS NEARLY UNIFORM IN SECTION AS IS PRACTICAL. THE STONES SHALL BE DENSE, RESISTANT TO THE ACTION OF AIR AND WATER, AND SUITABLE IN ALL ASPECTS FOR THE PURPOSE INTENDED, UNLESS OTHERWISE SPECIFIED, ALL STONES USED AS RIP-RAP SHALL WEIGH BETWEEN 50–150 POUNDS EACH, AND AT LEAST 60 PERCENT OF THE STONES SHALL WEIGH MORE THAN 100 POUNDS EACH.

ROCK RIP RAP

N.T.S.

STATE OF NORTH CAROLINA DEPT. OF TRANSPORTATION DIVISION OF HIGHWAYS RALEIGH, N.C.

1-12

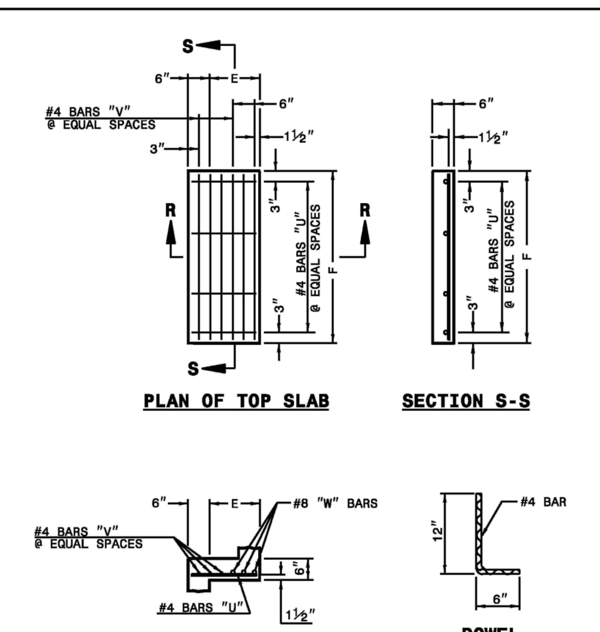

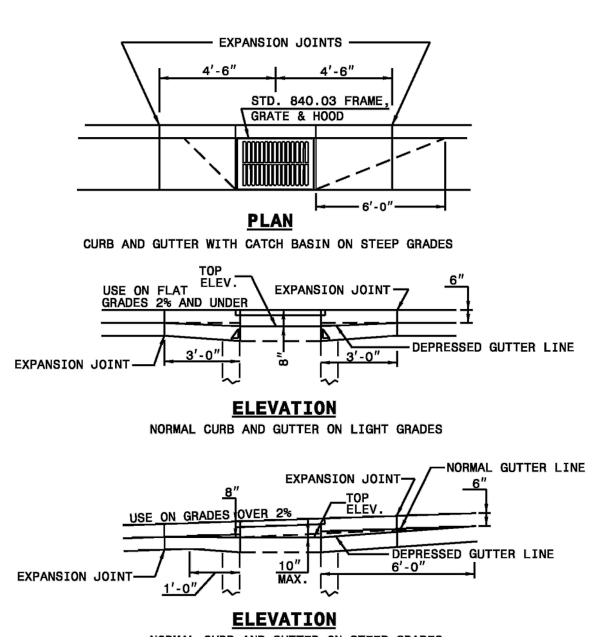

MINIMUM DIMENSIONS AND QUANTITIES FOR CONCRETE CATCH BASIN(BASED ON MIN. HEIGHT, H, WITH NO RISER) *

DIMENSIONS OF BOX AND PIPE						COVER DIMENSION		BARS-U		BARS-V		BARS-W			CU.YDS. CONC. IN BOX			DEDUCTIONS ONE PIPE	
PIPE	SPAN	WIDTH	WIDTH	SPAN	MIN. HEIGHT									TOTAL LBS.	TOP SLAB	BOTTOM SLAB	TOT. CONC. FOR MINIMUM HEIGHT, H		
D	A	B	C	G	H	E	F	NO.	LENGTH	NO.	LENGTH	NO.	LENGTH					C.M.	R.C.
12"	3'-0"	2'-2"	--	--	2'-9"	--	--	--	--	--	--	--	--	--	--	0.235	0.772	0.015	0.026
15"	3'-0"	2'-2"			3'-0"											0.235	0.829	0.023	0.036
18"	3'-0"	2'-2"			3'-3"											0.235	0.887	0.033	0.049
24"	3'-0"	2'-2"			3'-9"											0.235	1.001	0.059	0.085
30"	3'-0"	2'-2"	3'-4"		4'-3"	1'-2"	4'-0"	4	1'-5"	2	3'-9"	3	3'-9"	39	0.123	0.321	1.433	0.092	0.127
36"	3'-0"	2'-2"	3'-10"		4'-9"	1'-8"	4'-0"	4	1'-11"	3	3'-9"	3	3'-9"	43	0.161	0.358	1.714	0.132	0.178
42"	3'-0"	2'-2"		4'-5"	5'-3"	1'-5"	3'-2"	4	1'-8"	2	2'-11"	3	2'-11"	32	0.112	0.318	1.738	0.180	0.243
48"	3'-0"	2'-2"		5'-0"	5'-9"	2'-0"	3'-2"	4	2'-3"	3	2'-11"	3	2'-11"	35	0.145	0.352	2.052	0.235	0.317
54"	3'-0"	2'-2"		5'-7"	6'-3"	2'-7"	3'-2"	4	2'-10"	5	2'-11"	3	2'-11"	41	0.180	0.386	2.387	0.297	0.401

* RISER HAS .228 CUBIC YARDS OF CONCRETE PER FOOT HEIGHT

ENGLISH STANDARD DRAWING FOR **CONCRETE CATCH BASIN** 12" THRU 54" PIPE

SHEET 2 OF 2

840.02

STATE OF NORTH CAROLINA DEPT. OF TRANSPORTATION DIVISION OF HIGHWAYS RALEIGH, N.C.

1-12

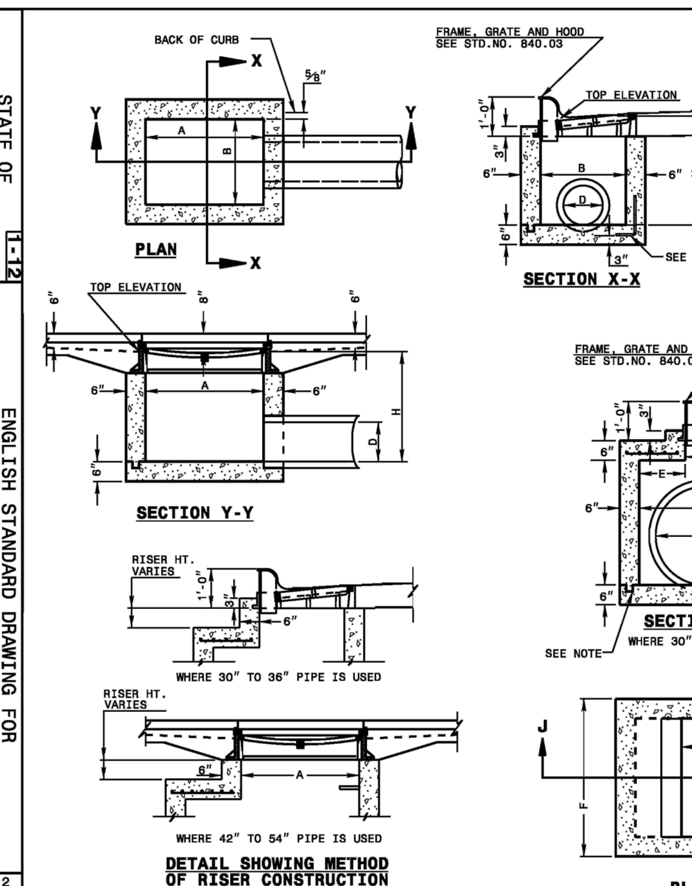

GENERAL NOTES:

USE CLASS "B" CONCRETE THROUGHOUT.

PROVIDE ALL CATCH BASINS OVER 3'-6" IN DEPTH WITH STEPS 12" ON CENTER. USE STEPS WHICH COMPLY WITH STD. DRAWING 840.66.

OPTIONAL CONSTRUCTION - MONOLITHIC POUR, 2" KEYWAY, OR #4 BAR DOWELS AT 12" CENTERS AS DIRECTED BY THE ENGINEER.

USE FORMS FOR THE CONSTRUCTION OF THE BOTTOM SLAB.

IF REINFORCED CONCRETE PIPE IS SET IN BOTTOM SLAB OF BOX, ADD TO SLAB AS SHOWN ON STD. NO. 840.00.

USE TYPE "E", "F" AND "G" GRATES UNLESS OTHERWISE INDICATED.

FOR 8'-0" IN HEIGHT OR LESS USE 6" WALLS AND BOTTOM SLAB. OVER 8'-0" TO 16'-0" IN HEIGHT USE 8" WALLS AND BOTTOM SLAB. ADJUST QUANTITIES ACCORDINGLY.

CONSTRUCT WITH PIPE CROWNS MATCHING.

CHAMFER ALL EXPOSED CORNERS 1".

DRAWING NOT TO SCALE.

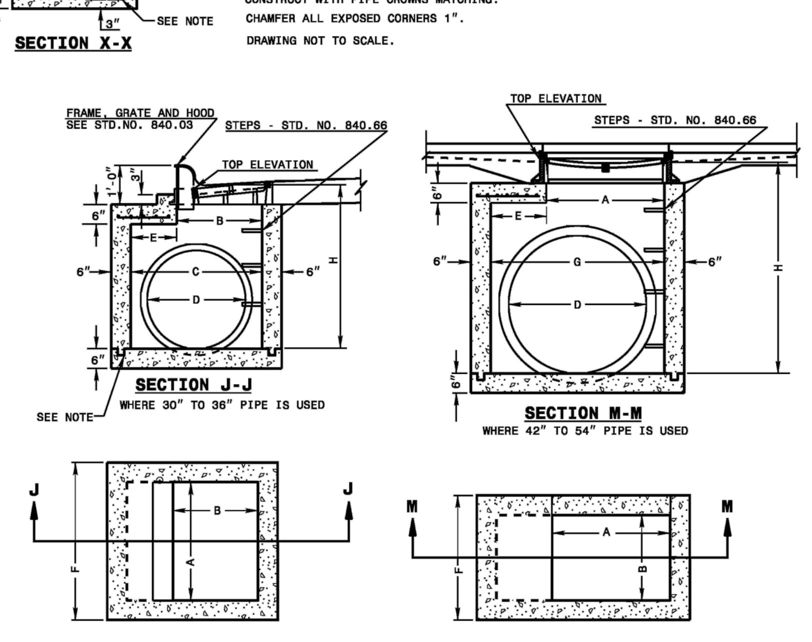

ENGLISH STANDARD DRAWING FOR **CONCRETE CATCH BASIN** 12" THRU 54" PIPE

SHEET 1 OF 2

840.02

STATE OF NORTH CAROLINA DEPT. OF TRANSPORTATION DIVISION OF HIGHWAYS RALEIGH, N.C.

1-12

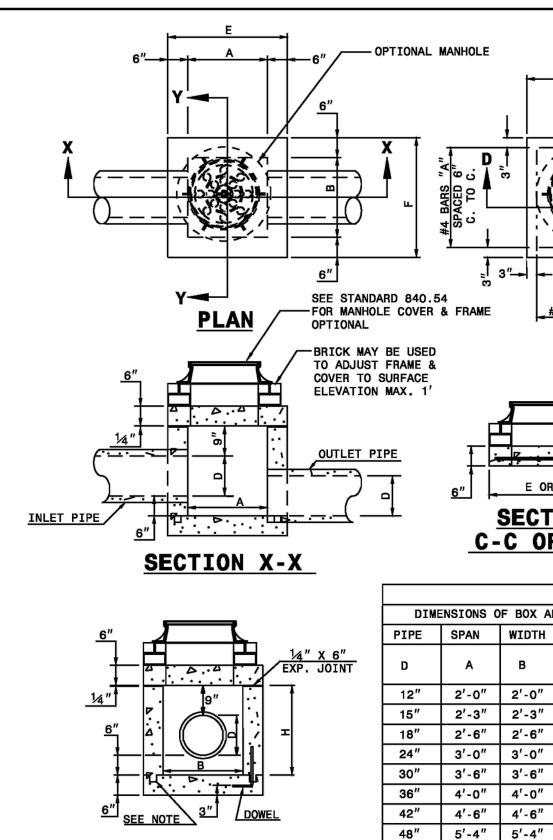

GENERAL NOTES:

CHAMFER ALL EXPOSED CORNERS 1".

USE CLASS "B" CONCRETE THROUGHOUT.

OPTIONAL CONSTRUCTION - MONOLITHIC POUR, 2" KEYWAY, OR #4 BAR DOWELS AT 12" CENTERS AS DIRECTED BY THE ENGINEER.

USE FORMS TO CONSTRUCT THE BOTTOM SLAB.

IF REINFORCED CONCRETE PIPE IS SET IN BASE SLAB OF BOX, ADD TO BASE AS SHOWN ON STANDARD NO. 840.00.

PROVIDE ALL JUNCTION BOXES OVER 3'-6" IN DEPTH WITH STEPS 12" ON CENTERS IN ACCORDANCE WITH STD. NO. 840.66.

ADJUST THE STEEL, CONCRETE AND BRICK MASONRY QUANTITIES TO INCLUDE THE ADDITION OF THE MANHOLE (I.E. DIAGONAL BARS SHORTENED AROUND OPENING IN TOP SLAB, ADDITIONAL VARIABLE HEIGHT BRICK MASONRY, OPENING IN TOP SLAB.)

MAX. DEPTH OF THIS STRUCTURE FROM TOP OF BOTTOM SLAB TO TOP ELEVATION IS 12 FEET.

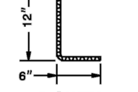

DIMENSIONS AND QUANTITIES FOR CONCRETE JUNCTION BOXES

DIMENSIONS OF BOX AND PIPE				REINFORCEMENT BARS "A"		TOP SLAB DIMENSIONS		CUBIC YARDS IN BOX			TOTAL QUANTITIES BOX AND SLABS		DEDUCTIONS FOR ONE PIPE CU.YDS.	
PIPE	SPAN	WIDTH	HEIGHT											
D	A	B	H	NO.	LENGTH	E	F	TOP SLAB	BOTTOM SLAB	WALL/ FT. OF HT.	LBS. REINF	CU. YDS. MIN. "H"	C.S.	R.C.
12"	2'-0"	2'-0"	2'-3"	12	2'-9"	3'-0"	3'-0"	0.167	0.167	0.185	22	0.750	0.015	0.024
15"	2'-3"	2'-3"	2'-6"	12	3'-0"	3'-3"	3'-3"	0.196	0.196	0.204	24	0.902	0.023	0.036
18"	2'-6"	2'-6"	2'-9"	14	3'-3"	3'-6"	3'-6"	0.227	0.227	0.222	30	1.065	0.033	0.049
24"	3'-0"	3'-0"	3'-3"	16	3'-9"	4'-0"	4'-0"	0.296	0.296	0.259	40	1.434	0.059	0.085
30"	3'-6"	3'-6"	3'-9"	18	4'-3"	4'-6"	4'-6"	0.375	0.375	0.296	51	1.860	0.092	0.127
36"	4'-0"	4'-0"	4'-3"	20	4'-9"	5'-0"	5'-0"	0.463	0.463	0.333	64	2.341	0.132	0.178
42"	4'-6"	4'-6"	4'-9"	22	5'-3"	5'-6"	5'-6"	0.560	0.560	0.370	77	2.878	0.180	0.243
48"	5'-4"	5'-4"	5'-3"	26	6'-3"	6'-4"	6'-4"	0.743	0.743	0.407	111	3.623	0.235	0.317
54"	5'-10"	5'-10"	5'-9"	28	6'-7"	6'-10"	6'-10"	0.865	0.865	0.444	126	4.283	0.297	0.401
60"	6'-6"	6'-6"	6'-3"	30	7'-3"	7'-6"	7'-6"	1.042	1.042	0.481	145	5.090	0.367	0.495
66"	7'-1"	7'-1"	6'-9"	32	7'-10"	8'-1"	8'-1"	1.210	1.210	0.518	169	5.917	0.444	0.589

ENGLISH STANDARD DRAWING FOR **CONCRETE JUNCTION BOX** (WITH OPTIONAL MANHOLE) 12" THRU 66" PIPE

SHEET 1 OF 1

840.31

GreenbergFarrow

COA#:

1430 W. Peachtree St. NW
Suite 200
Atlanta, GA 30309
t: 404 601 4000 f: 404 601 3970

PROJECT TEAM

COPYRIGHT NOTICE

This drawing is the property of the above referenced Professional and is not to be used for any purpose other than the specific project and site named herein, and cannot be reproduced in any manner without the express written permission from the Professional

ISSUE/REVISION RECORD

DATE	DESCRIPTION
10-20-15	SITE PLAN
12-02-15	DP SUBMITTAL
02-03-16	NCDOT RESUBMITTAL
02-03-16	COW SITE RESUBMITTAL

NORTH CAROLINA PROFESSIONAL ENGINEER SEAL JOHN H. NOURZAD

2/3/16

PROFESSIONAL IN CHARGE
JOHN NOURZAD
PROFESSIONAL ENGINEER
LICENSE NO. 023207

PROJECT MANAGER
LARRY DIEHL

QUALITY CONTROL
FEDERICO OLIVARES, PE

DRAWN BY
RYAN SCOTT, EIT

PROJECT NAME

CIRCLE K CAROLINA BEACH

WILMINGTON NORTH CAROLINA

3739 CAROLINA BEACH RD
WILMINGTON, NC

PROJECT NUMBER
20151091

SHEET TITLE
DETAIL SHEET

SHEET NUMBER
C-7.1

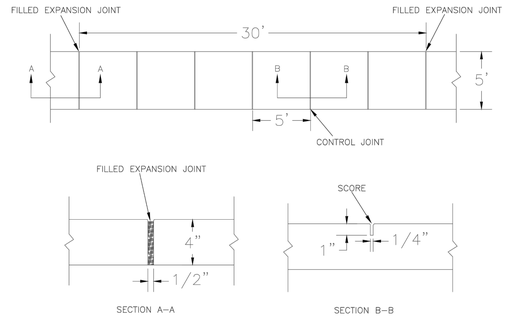

NOTES:

1. JOINT MATERIAL TO COMPLY WITH CURRENT NCDOT STANDARDS.
2. SANITARY SEWER CLEAN–OUTS, WATER METERS, MANHOLES, AND VALVE LIDS TO BE LOCATED OUTSIDE SIDEWALK WHERE FEASIBLE.
3. MINIMUM SIDEWALK WIDTH TO BE 6' MINIMUM IF PLACED AT BACK OF CURB.
4. CONCRETE FOR ALL SIDEWALKS (EXCEPT ANY PORTION CONTAIN WITHIN A DRIVEWAY APRON) SHALL BE CLASS "A" – 3,000 PSI.
5. MINIMUM REPLACEMENT FOR REPAIRS IS A 5' X 5' PANEL
6. 4" STONE BASE MAY BE REQUIRED FOR POOR SOIL CONDITIONS
7. MINIMUM DEPTH FOR TUNNELING BELOW SIDEWALK IS 12"
8. MAX ADJACENT GROUND SLOPE WITHOUT RAILING IS 2:1
9. MIN GRADE FOR PROPER DRAINAGE IS 1% IN AT LEAST 1 DIRECTION. MAX CROSS SLOPE IS 2%. MAX LONGITUDINAL SLOPE IS 8.3%, 10% IF LIMITED BY EXISTING CONDITIONS, OR NO GREATER THAN THE SLOPE OF THE EXISTING ADJACENT ROAD.

DATE: OCTOBER, 2010	STANDARD DETAIL	CITY OF WILMINGTON NORTH CAROLINA
DRAWN: PB/JSR	SIDEWALK	CITY OF WILMINGTON ENGINEERING PO BOX 1810 WILMINGTON N.C. 28402 (910) 341–7807
CHECKED: DEC		
SCALE NOT TO SCALE		SD 3-10

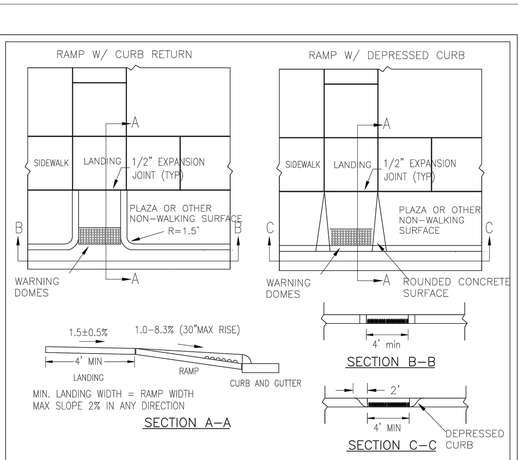

WARNING DOME NOTES:
1. USE CONTRASTING COLORS, RED OR BLACK ON WHITE PAVEMENT.
2. USE CAST IN PLACE PAVERS FOR NEW CONSTRUCTION.
3. RUBBER MATS ARE PERMITTED FOR RETROFITS.
4. LANDING AND RAMP WIDTH MAY BE REDUCED TO 3' WHERE SPACE IS LIMITED AND DESIGN IS APPROVED BY THE CITY ENGINEER.

DATE: DECEMBER, 2010	STANDARD DETAIL	CITY OF WILMINGTON NORTH CAROLINA
DRAWN: PB/JSR	PERPENDICULAR CURB RAMP ADJACENT TO PLAZA	CITY OF WILMINGTON ENGINEERING PO BOX 1810 WILMINGTON N.C. 28402 (910) 341–7807
CHECKED: DEC		
SCALE NOT TO SCALE		SD3-08

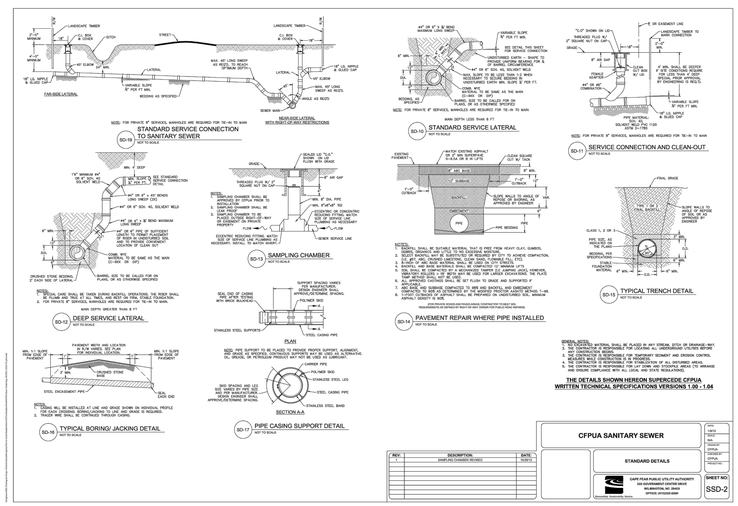

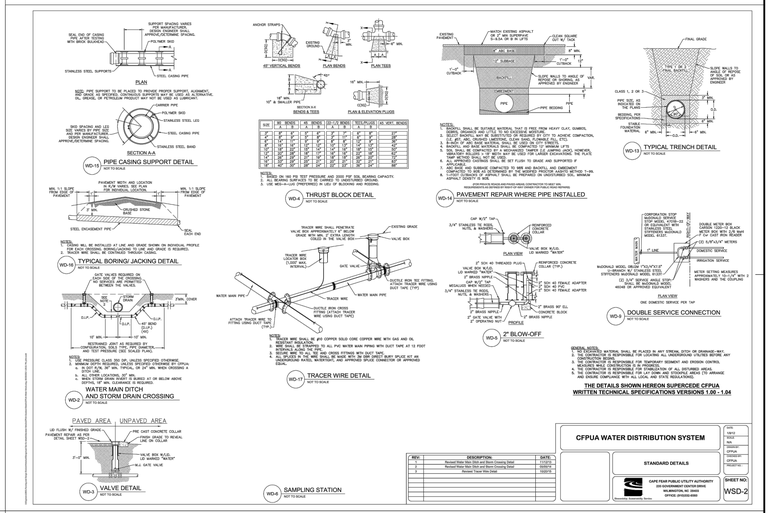

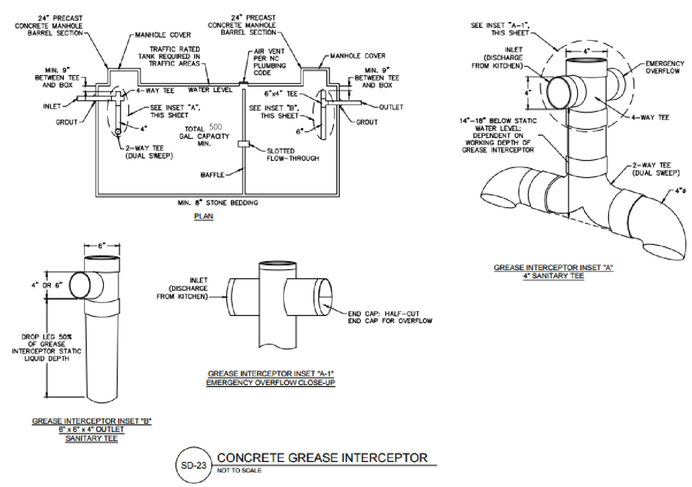

SD-23 CONCRETE GREASE INTERCEPTOR
NOT TO SCALE

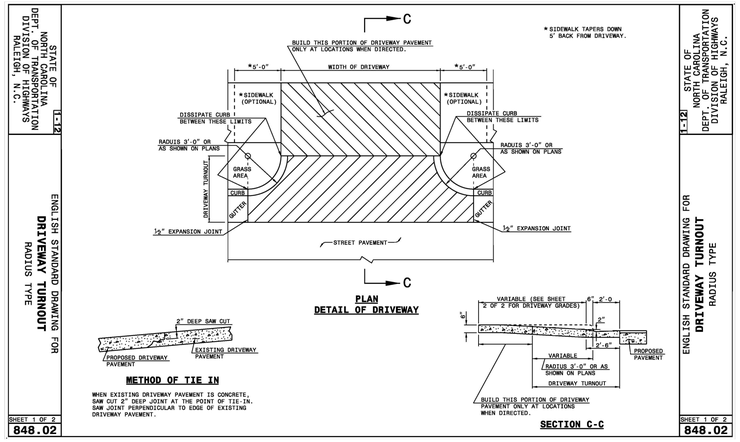

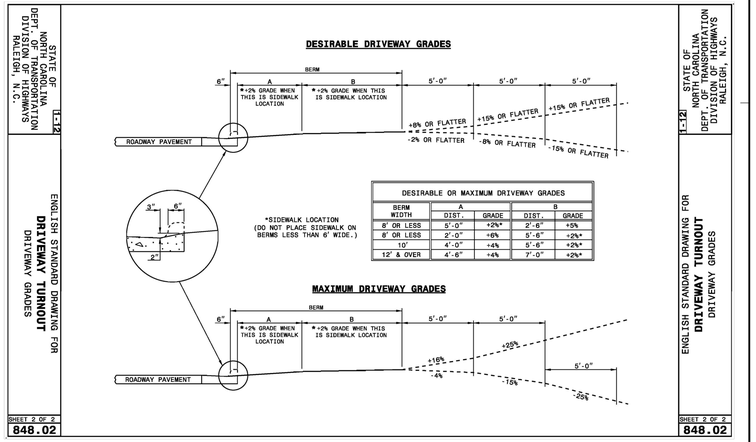

DESIRABLE OR MAXIMUM DRIVEWAY GRADES

BERM WIDTH	A DIST.	A GRADE	B DIST.	B GRADE
8' OR LESS	5'-0"	+2%*	2'-6"	+5%
8' OR LESS	2'-0"	+6%	5'-6"	+2%*
10'	4'-0"	+4%	5'-6"	+2%*
12' & OVER	4'-6"	+4%	7'-0"	+2%*

GreenbergFarrow
COAP.
1430 W. Peachtree St. NW
Suite 200
Atlanta, GA 30309
t: 404 601 4000 f: 404 601 3970

PROJECT TEAM

COPYRIGHT NOTICE
This drawing is the property of the above referenced Professional and is not to be used for any purpose other than the specific project and site named herein, and cannot be reproduced in any manner without the express written permission from the Professional

ISSUE/REVISION RECORD

DATE	DESCRIPTION
10–20–15	SITE PLAN
12–02–15	DP SUBMITTAL
02–03–16	NCDOT RESUBMITTAL
02–03–16	COW SITE RESUBMITTAL

NORTH CAROLINA PROFESSIONAL SEAL ENGINEER JOHN H. NOURZAD
2/3/16

PROFESSIONAL IN CHARGE
JOHN NOURZAD
PROFESSIONAL ENGINEER
LICENSE NO. 023207

PROJECT MANAGER
LARRY DIEHL

QUALITY CONTROL
FEDERICO OLIVARES, PE

DRAWN BY
RYAN SCOTT, EIT

PROJECT NAME
CIRCLE K CAROLINA BEACH

WILMINGTON NORTH CAROLINA
3739 CAROLINA BEACH RD WILMINGTON, NC

PROJECT NUMBER
20151091

SHEET TITLE
DETAIL SHEET

SHEET NUMBER
C-7.2

NOT ISSUED FOR CONSTRUCTION

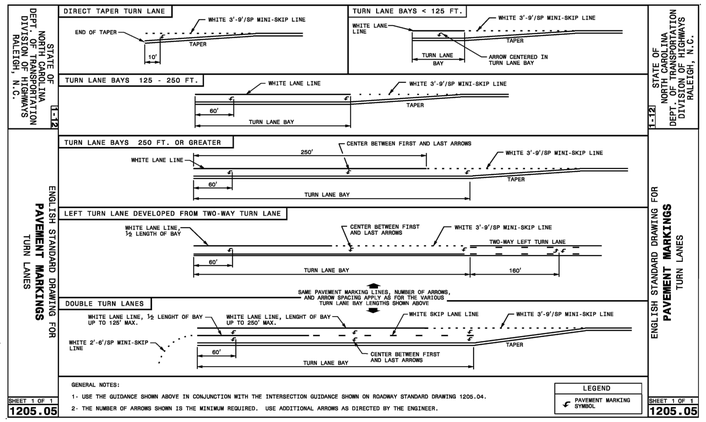

Approved Construction Plan

Name Date

Planning _____

Traffic _____

Fire _____

CITY OF WILMINGTON NORTH CAROLINA

Public Services Engineering Division

APPROVED STORMWATER MANAGEMENT PLAN

Date: _____ Permit #_____

Signed: _____

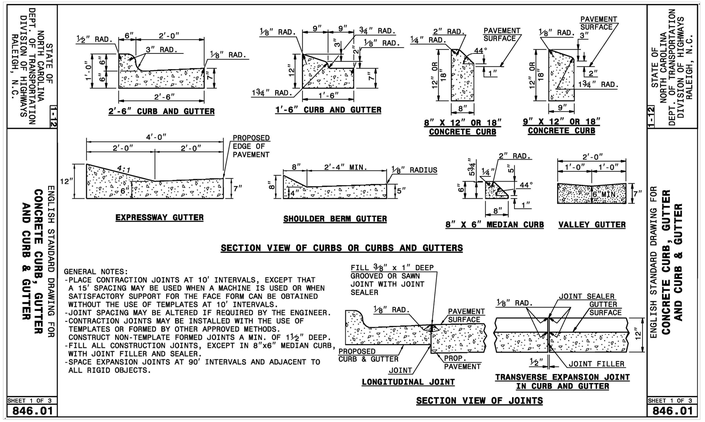

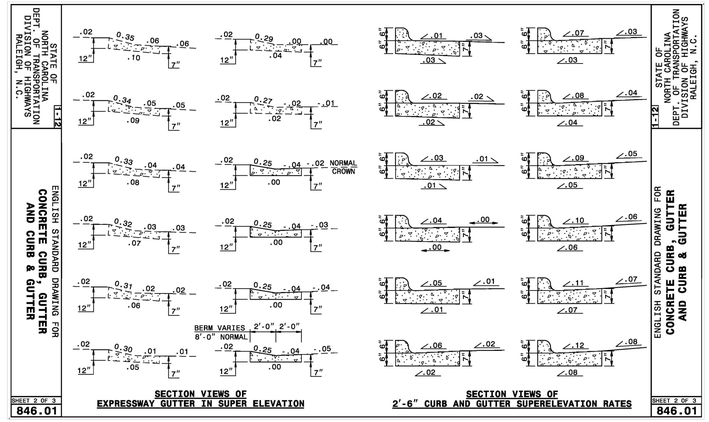

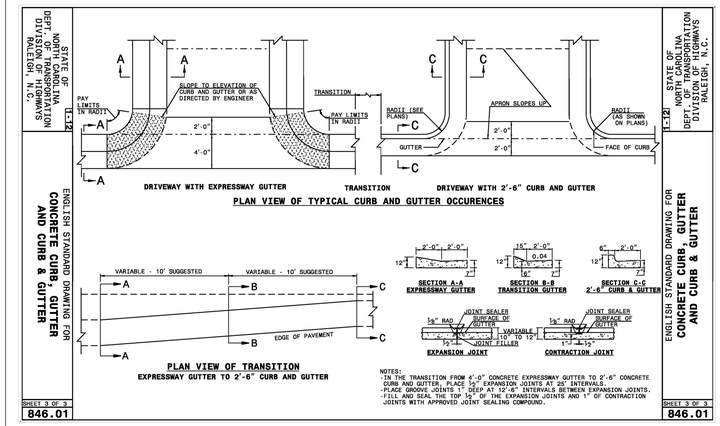

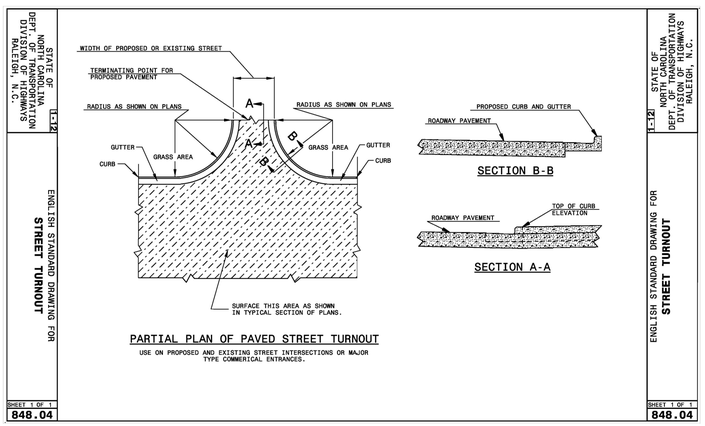

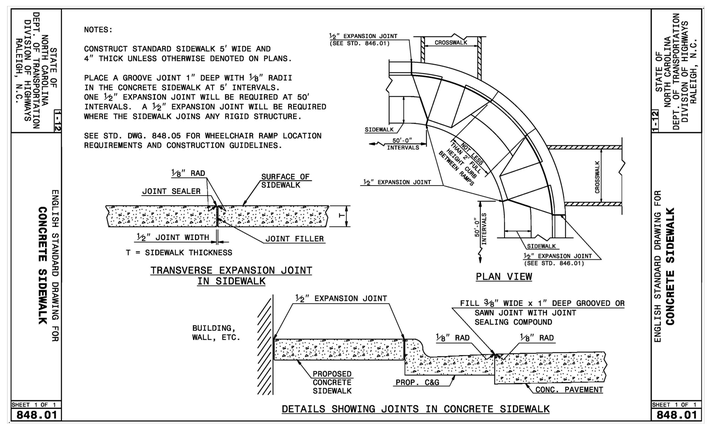

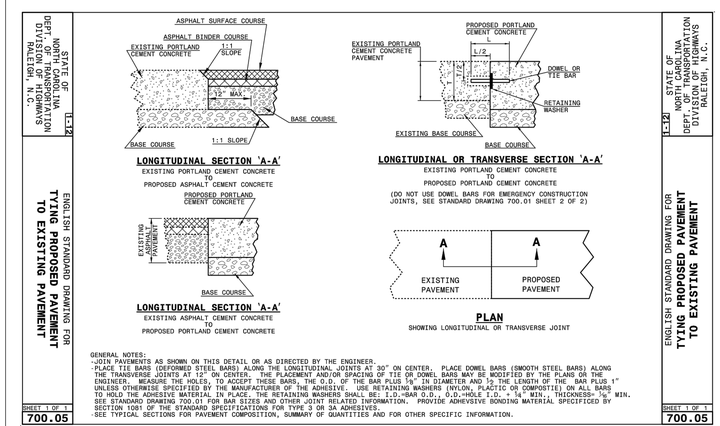

GreenbergFarrow
COA#:
1430 W. Peachtree St. NW
Suite 200
Atlanta, GA 30309
t: 404 601 4000 f: 404 601 3970

PROJECT TEAM

COPYRIGHT NOTICE
This drawing is the property of the above referenced Professional and is not to be used for any purpose other than the specific project and site named herein, and cannot be reproduced in any manner without the express written permission from the Professional

ISSUE/REVISION RECORD

DATE	DESCRIPTION
10-20-15	SITE PLAN
12-02-15	DP SUBMITTAL
02-03-16	NCDOT RESUBMITTAL
02-03-16	COW SITE RESUBMITTAL

NORTH CAROLINA PROFESSIONAL SEAL ENGINEER JOHN H. NOURZAD

2/3/16

PROFESSIONAL IN CHARGE
JOHN NOURZAD
PROFESSIONAL ENGINEER
LICENSE NO. 023207

PROJECT MANAGER
LARRY DIEHL

QUALITY CONTROL
FEDERICO OLIVARES, PE

DRAWN BY
RYAN SCOTT, EIT

PROJECT NAME

CIRCLE K CAROLINA BEACH

WILMINGTON NORTH CAROLINA

3739 CAROLINA BEACH RD WILMINGTON, NC

PROJECT NUMBER
20151091

SHEET TITLE

DETAIL SHEET

SHEET NUMBER

C-7.3

NOT ISSUED FOR CONSTRUCTION

Approved Construction Plan

	Name	Date
Planning		
Traffic		
Fire		

CITY OF WILMINGTON NORTH CAROLINA
Public Services Engineering Division
APPROVED STORMWATER MANAGEMENT PLAN
Date: _____ Permit #_____
Signed: _____

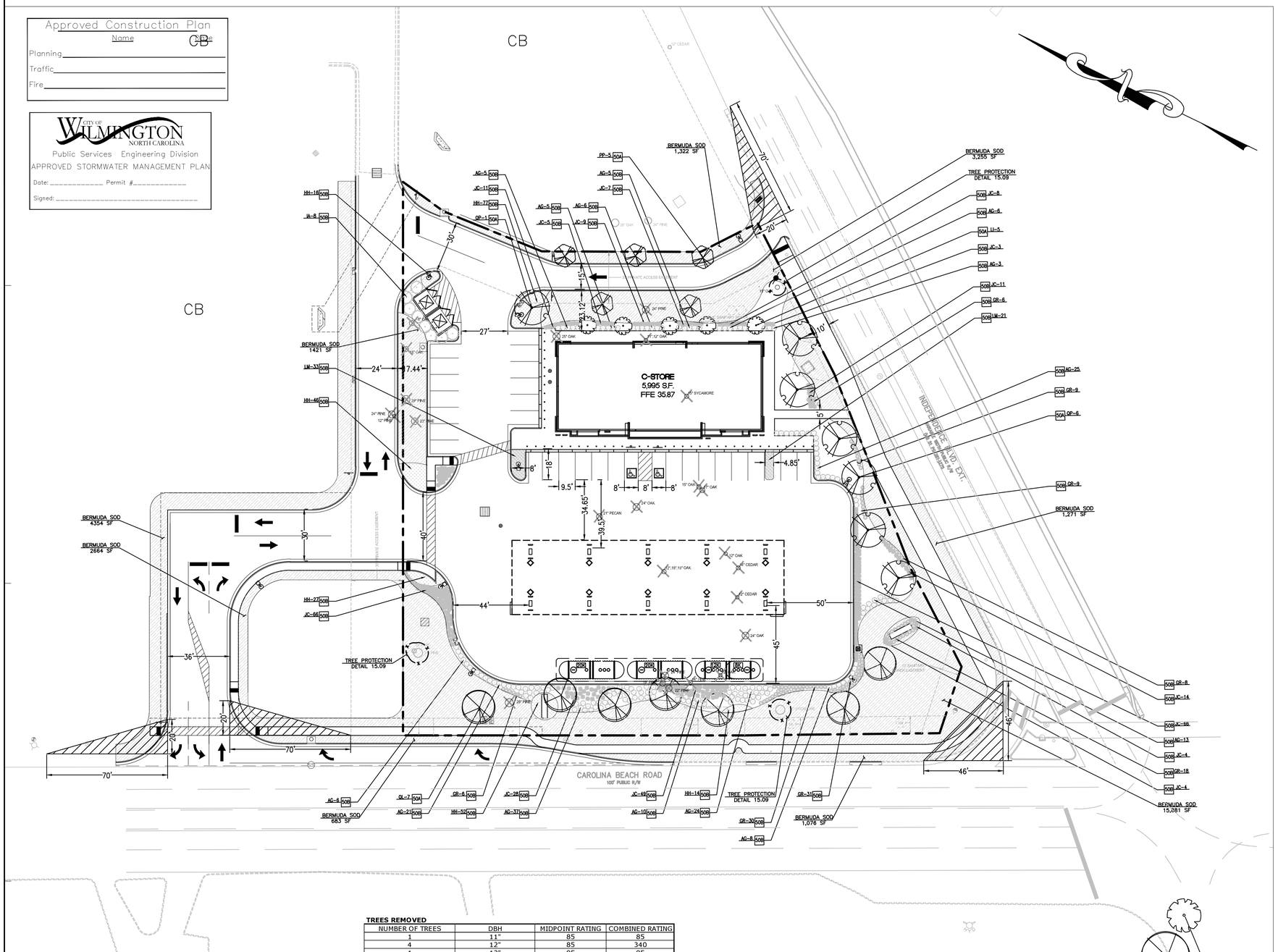

GRAPHIC SCALE

30 0 15 30 60 120

(IN FEET)
1 inch = 30 ft.

EXISTING LEGEND:

- INDEX CONTOUR
- INTERMEDIATE CONTOUR
- EDGE OF PAVEMENT
- CURB AND GUTTER
- PROPERTY LINE
- ADJOINER PROPERTY LINE (NOT SURVEYED)
- SWALE / DITCH LINE
- SANITARY SEWER
- STORM SEWER
- OVERHEAD ELECTRIC
- UNDERGROUND COMMUNICATION SERVICE
- UNDERGROUND GAS SERVICE
- UNDERGROUND ELECTRIC SERVICE
- WATER
- IRON REBAR FOUND
- IRON PIPE FOUND
- PLAT / FIELD
- UTILITY POLE
- GUY ANCHOR WIRE
- SIGN
- CURB DRAIN INLET (CDI)/DRAIN INLET (DI)
- STORM DRAIN MANHOLE (SDMH)
- SANITARY SEWER MANHOLE (SMH)
- WATER VALVE & BACK PREVENTER VALVE
- WATER METER
- FIRE HYDRANT (HYD.)
- TREE TRUNK
- CONCRETE
- END SECTIONS

SITE DATA SUMMARY:

PROJECT NAME:	CIRCLE K 20151091	
PROJECT ADDRESS:	3739 CAROLINA BEACH ROAD, WILMINGTON, NC, 28412	
PARCEL ID NUMBER:	R06515-003-011-000	
ZONING:	EXISTING: R-15 & CB PROPOSED: CB	
BUILDING SETBACKS:	REQUIRED	PROPOSED
FRONT:	20'	171'
REAR:	10'	52'
SIDE:	0'	27' & 89'
CORNER:	20'	189'
CIRCLE K TRACT:	1.811 ACRES/ 78,882 SF	
CONVENIENCE STORE:	5,995 SF	
NUMBER OF BUILDINGS:	1	
NUMBER OF STORIES:	1	
BUILDING HEIGHT:	23'8"	
CANOPY WITH 10 PUMP ISLANDS:	6,515 SF	
FAR:	1:07.59	
PARKING PROVIDED:	30 (2 ACCESS. PARKING SPACES)	
PARKING REQUIRED:	15 MINIMUM	
PERVIOUS COVER:		
EXISTING:	1,119 SF	
PROPOSED:	51,510 SF	
IMPERVIOUS COVER:		
EXISTING:	77,763 SF	
PROPOSED:	27,371 SF	
LOT COVERAGE:		
EXISTING:	0.01 (1,119 SF)	
PROPOSED:	0.65 (51,510 SF)	

LANDSCAPE DETAILS

15.09.1 TREE PROTECTION DURING CONSTRUCTION
15.09.2 TREE PROTECTION DURING CONSTRUCTION
50A TREE PLANTING (TYP.)
50B SHRUB PLANTING (TYP.)

	ACRES	SQUARE FEET
SITE ACRES	**1.81**	**78,882**

TREE REPLACEMENT	REQ. PER ACRE	REQ. PER SITE
REQUIRED TREES	15	**27.17**
PRESERVED # OF TREES		4
REMOVED # OF TREES		27
PROPOSED # TREES		24
TOTAL # OF TREES ((PRESERVED + PROPOSED)-REMOVED)		**28.17**

POINT REPLACEMENT

PRESERVED TREES	345
REMOVED TREES	2435
PROPOSED TREES	2115
TOTAL POINTS ((PRESERVED + PROPOSED)-REMOVED)	**25.00**

TREES PRESERVED

NUMBER OF TREES	DBH	MIDPOINT RATING	COMBINED RATING
1	15"	95	95
1	15"	85	85
1	31"	95	95
1	32"	70	70
		TOTAL POINTS PRESERVED	**345**

TREES REMOVED

NUMBER OF TREES	DBH	MIDPOINT RATING	COMBINED RATING
1	11"	85	85
4	12"	85	340
1	12"	95	95
1	12"	75	75
1	14"	75	75
2	14"	95	190
2	15"	85	170
1	16"	85	85
1	16"	70	70
1	17"	85	85
2	18"	85	170
1	21"	75	75
1	22"	95	95
1	23"	95	95
2	24"	85	170
3	24"	95	285
1	25"	85	85
1	28"	95	95
1	29"	95	95
		TOTAL POINTS REMOVED	**2435**

PROPOSED (REPLACEMENT) TREES

NUMBER OF TREES	DBH	MIDPOINT RATING	COMBINED RATING
5		95	475
5		90	450
7		85	595
7		85	595
		TOTAL POINTS REPLACED	**2115**

LANDSCAPE CALCULATIONS

	REQUIRED	PROVIDED
STREET YARD CALCULATIONS		
341 LF (STREET FRONTAGE)*18 + 246 LF (SECONDARY FRONTAGE)*9 = 8,352/600	13.92	15
PROPOSED INTERIOR SHADING PER 27,371 S.F. IMPERVIOUS SURFACE		
19(707 SF)+ 5(314 SF) = 15,003/27,371	30%	55%

PLANT LIST

KEY	QTY	COMMON NAME/ BOTANICAL NAME	CAL./CONT. SIZE & HT. @ PLANTING	MATURE HEIGHT	MATURE SPREAD	SPACING	COMMENTS
LI	5	CRAPE MYRTLE Lagerstroemia indica	3" CAL. @ 15'	25'	12-15'	20 FT. O.C.	MULTI-STEM (3)
QL	7	LAUREL OAK Quercus laurifolia	3" CAL. @ 20'	40-60'	30-40'	30 FT. O.C.	
PP	5	LONGLEAF PINE Pinus palustris	3" CAL. @ 15'	80-100'	30-40'	40 FT. O.C.	
QP	7	WILLOW OAK Quercus phellos	3" CAL. @ 20'	70-100'	40-60'	30 FT. O.C.	
IA	8	SPICE PLANT Illicium anisatum	15 GAL @ 10'	10-12'	8-10'	6 FT. O.C.	
AG	161	EDWARD GOUCHER GLOSSY ABELIA Abelia x grandiflora 'Edward Goucher'	5 GAL.	3-4'	3-4'	36 IN. O.C.	
GR	91	DWARF GARDENIA Gardenia radicans	3 GAL.	2-3'	4'	24 IN. O.C.	
JC	191	BLUE VASE JUNIPER Juniperus chinensis 'Blue Vase'	3 GAL	4-5'	3-4'	30 IN. O.C.	
HH	180	HAPPY RETURNS DAYLILY Hemerocallis 'Happy Returns'	1 GAL.	2-3'	2-3'	18 IN. O.C.	
LM	54	LILY TURF Liriope muscari	1 GAL.	8-20""	12-18"	12 IN. O.C.	
14.625 SF		BERMUDA GRASS Cynodon dactylon					

GreenbergFarrow
COA#:

PROJECT TEAM

COPYRIGHT NOTICE
This drawing is the property of the above referenced Professional and is not to be used for any purpose other than the specific project and site named herein, and cannot be reproduced in any manner without the express written permission from the Professional

ISSUE/REVISION RECORD

DATE	DESCRIPTION
10-20-15	SITE PLAN
12-02-15	DP SUBMITTAL
02-03-16	NCDOT RESUBMITTAL
02-03-16	COW SITE RESUBMITTAL

NORTH CAROLINA PROFESSIONAL ENGINEER SEAL JOHN H. NOURZAD
2/3/16

PROFESSIONAL IN CHARGE
HAMILTON WILLLIAMS
PROFESSIONAL ENGINEER
LICENSE NO. 023207
PROJECT MANAGER
LARRY DIEHL
QUALITY CONTROL
FEDERICO OLIVARES, PE
DRAWN BY
RYAN SCOTT, EIT

PROJECT NAME

CIRCLE K CAROLINA BEACH

WILMINGTON NORTH CAROLINA

3739 CAROLINA BEACH RD WILMINGTON, NC

PROJECT NUMBER
20151091

SHEET TITLE

LANDSCAPE PLAN

SHEET NUMBER

L-1.0

NOT ISSUED FOR CONSTRUCTION

PLANTING NOTES

1. LANDSCAPE PLANS ARE FOR THE LOCATION AND IDENTIFICATION OF PLANT MATERIAL ONLY. NO OTHER WORK IS TO BE PERFORMED BASED ON THESE PLANS.

2. QUANTITIES ON THE PLANT SCHEDULE ARE PROVIDED FOR CONVENIENCE. THE CONTRACTOR SHALL BE RESPONSIBLE FOR HIS/HER OWN QUANTITY CALCULATIONS. IN THE EVENT OF A DISCREPANCY BETWEEN THE LANDSCAPE PLANS AND THE PLANT SCHEDULE, THE LANDSCAPE PLAN WILL TAKE PRECEDENCE. THE CONTRACTOR SHALL INFORM THE LANDSCAPE ARCHITECT IMMEDIATELY UPON DISCOVERING ANY QUANTITY DISCREPANCIES.

3. THE CONTRACTOR SHALL NOT CHANGE OR SUBSTITUTE PLANT VARIETIES OR SPECIES WITHOUT PRIOR WRITTEN APPROVAL FROM THE LANDSCAPE ARCHITECT.

4. CONTRACTOR SHALL TAKE 3 REPRESENTATIVE SOIL SAMPLES OF EACH PROPOSED PLANT BED AND SUBMIT COPIES OF THE RESULTS TO THE LANDSCAPE ARCHITECT PRIOR TO BEGINNING WORK.

5. CONTRACTOR SHALL ENSURE POSITIVE DRAINAGE OF ALL PLANTING HOLES AND PLANT BEDS PRIOR TO INSTALLATION.

6. STUMPS LABELED FOR REMOVAL SHALL BE EXCAVATED, NOT GROUND. REMOVE ANY DEBRIS FROM THE HOLE, FILL WITH TOP SOIL, COMPACT AND RAKE SMOOTH PRIOR TO INSTALLING NEW PLANT MATERIAL.

7. TOPSOIL WILL NOT BE STOCKPILED FOR RE-USE IN LANDSCAPE WORK. CONTRACTOR SHALL IMPORT TOPSOIL AS REQUIRED TO COMPLETE LANDSCAPE WORK.

   PROVIDE NEW TOPSOIL THAT IS FERTILE, FRIABLE, NATURAL LOAM, SURFACE SOIL, REASONABLY FREE OF ROOTS, STUMPS AND LARGE STONES AND FREE OF BRUSH, WEEDS, LITTER, AND OTHER EXTRANEOUS OR TOXIC MATTER HARMFUL TO PLANT GROWTH.

   OBTAIN TOPSOIL FROM LOCAL SOURCES OR FROM AREAS HAVING SIMILAR SOIL CHARACTERISTICS TO THAT FOUND AT PROJECT SITE. OBTAIN TOPSOIL ONLY FROM NATURALLY, WELL DRAINED SITES WHERE TOPSOIL OCCURS IN A DEPTH OF NOT LESS THAN 4 INCHES. DO NOT OBTAIN FROM BOGS OR MARSHES.
   PLANT MATERIAL SHALL BE PLACED AS SHOWN ON THE LANDSCAPE PLANS.

8. PLANTING SOIL MIX FOR TREES, SHRUBS, AND GROUNDCOVERS SHALL CONSIST OF THE FOLLOWING:

   80% TOPSOIL
   20% PREPARED ADDITIVES (BY VOLUME AS FOLLOWS):

   - 3 PARTS – ORGANIC SOIL CONDITIONER (NATURE'S HELPER OR EQUAL)
   - 1 PART – STERILIZED COW MANURE (OR EQUAL)
   - COMMERCIALLY AVAILABLE STARTER FERTILIZER @ RATES SPECIFIED BY MANUFACTURER
   - LIME (AS RECOMMENDED IN SOIL ANALYSIS)

9. QUALITY OF PLANT MATERIAL: ALL PLANTS SHALL CONFORM TO THE CURRENT VERSION OF THE AMERICAN STANDARD FOR NURSERY STOCK (ANSI Z60.1).

   PLANT MATERIAL SHALL BE FREE OF DISEASE AND/OR INSECTS, AND SHALL HAVE A HEALTHY ROOT SYSTEM WITH NO CIRCLING OR KINKED ROOTS. CONTAINER PLANTS SHALL NOT BE ROOT BOUND. PLANT MATERIAL SHALL CONFORM TO THE CURRENT STANDARDS OF THE AMERICAN STANDARD FOR NURSERY STOCK (ANSI Z60.1–2004).

   TREES SHALL HAVE STRAIGHT TRUNKS, DENSE CANOPIES AND STRONG BRANCHING WITH GOOD CROTCH ANGLES. CONTRACTOR SHALL SUBMIT GRADE PHOTOS OF EACH TREE TO LANDSCAPE ARCHITECT PRIOR TO DELIVERY.

   ALL PLANT MATERIAL SHALL BE SUFFICIENTLY WATERED TO WET THE ENTIRE ROOT BALL WITHIN TWO HOURS OF PLANTING.

10. INSPECTION AND APPROVAL OF PLANT MATERIAL: ALL PLANT MATERIAL SHALL BE INSPECTED AND APPROVED BY THE LANDSCAPE ARCHITECT UPON DELIVERY TO THE SITE, PRIOR TO INSTALLATION. CONTRACTOR SHALL GIVE LANDSCAPE ARCHITECT AT LEAST LEAST ONE WEEK NOTICE PRIOR TO PLANT DELIVERY.

11. NEW SHRUB AND GROUNDCOVER PLANTING SHALL BE A MINIMUM OF 36" AWAY FROM EXISTING TREES.

12. CONTRACTOR SHALL REMOVE ALL PLANT TAGS AFTER APPROVAL OF PLANT INSTALLATION BY LANDSCAPE ARCHITECT

13. MULCH ALL PLANT BEDS AND TREE RINGS WITH FRESH, CLEAN PINESTRAW TO A MINIMUM DEPTH OF THREE (3) INCHES. DO NOT PILE MULCH AROUND THE BASE OF PLANTS OR TREE TRUNKS. ALL MULCH EDGES SHALL BE NEATLY TUCKED. ALL STRING AND/OR BAILING WIRE SHALL BE REMOVED. DUST SHRUBS AND GROUND COVER AFTER MULCHING TO REMOVE LOOSE PINESTRAW FROM THE PLANTS.

14. BED PREPARATION FOR SOD INSTALLATION: REMOVE EXISTING VEGETATION WITHIN THE APPROVED BEDLINE. IF THE EXISTING SOIL IS COMPACTED OR OTHERWISE UNSUITABLE FOR PLANTING, REMOVE THE TOP 4 INCHES OF SOIL. TILL SUBGRADE TO A MINIMUM DEPTH OF 6 INCHES. REMOVE LARGE STONES, STICKS, ROOTS, RUBBISH, AND OTHER EXTRANEOUS MATERIAL.

    SPREAD 2 INCHES OF TOPSOIL OVER THE PREPARED BED AND TILL INTO THE TOP 4 INCHES OF LOOSENED SUBGRADE. SPREAD THE REMAINING 2 INCHES OF TOPSOIL, RAKE SMOOTH AND ROLL COMPACT. BEDS SHALL BE FINISHED WITH A SLIGHT CROWN AT THE CENTER TO ALLOW WATER TO SHEET FLOW TO THE SIDES.

    WATER THE BED IMMEDIATELY BEFORE LAYING THE SOD SO THAT THE TOP INCH OF SOIL IS MOIST. ALLOW WATER TO PERCOLATE SO THERE IS NO STANDING WATER. LIMIT PREPARATION TO AREAS THAT WILL BE SODDED THAT SAME DAY.

15. SEEDING: ALL SLOPES AND AREAS DISTURBED BY CONSTRUCTION NOT SODDED SHALL BE SEEDED, FERTILIZED, MULCHED, WATERED, AND MAINTAINED UNTIL HARDY GROWTH IS ESTABLISHED IN ALL AREAS. ANY AREAS DISTURBED FOR ANY REASON PRIOR TO FINAL ACCEPTANCE OF THE PROJECT SHALL BE CORRECTED BY THE CONTRACTOR AT NO ADDITIONAL COST TO THE OWNER.

16. MAINTENANCE: CONTRACTOR SHALL MAINTAIN ALL PLANT MATERIAL FROM THE TIME IT IS INSTALLED UNTIL FINAL ACCEPTANCE OR WHEN THE OWNER TAKES OVER MAINTENANCE, WHICHEVER OCCURS FIRST. MAINTENANCE SHALL INCLUDE BUT NOT BE LIMITED TO MOWING, EDGING, WEEDING, WATERING, PRUNING, FERTILIZING, ETC.

17. WARRANTY: CONTRACTOR SHALL PROVIDE A ONE-YEAR WARRANTY ON ALL PLANT MATERIAL AND LABOR. WARRANTY PERIOD SHALL BEGIN UPON FINAL COMPLETION OR WHEN THE OWNER TAKES OVER MAINTENANCE, WHICHEVER OCCURS FIRST.

    THE CONTRACTOR SHALL MAKE PERIODIC INSPECTIONS OF THE PROJECT DURING THE WARRANTY PERIOD TO ENSURE THAT THE ESTABLISHMENT RATE OF GROWTH IS ADEQUATE. ANY METHODS OR PRODUCTS DEEMED NOT NORMAL OR DETRIMENTAL TO GOOD PLANT GROWTH SHALL BE REPORTED TO THE LANDSCAPE ARCHITECT IN WRITING. FAILURE TO INSPECT AND REPORT WILL BE INTERPRETED AS APPROVAL, AND THE CONTRACTOR SHALL BE RESPONSIBLE FOR ANY AND ALL REPLACEMENTS.

18. IRRIGATION TO BE PROVIDED BY DESIGN-BUILD.

19. LANDSCAPE ISLANDS: SHALL FUNCTIOIN AS SMALL INFILTRATION DEVICES WHEN FEASIBLE.

20. PROPOSED VEGETATION: WITHIN SITE TRIANGLES SHALL NOT INTERFERE WITH CLEAR VISUAL SIGHT LINES FROM 30"–10'. (SEC. 18–566 COFW LDC)

21. A LANDSCAPING PLAN: INDICATING THE LOCATION OF REQUIRED STREET TREES SHALL BE SUBMITTED TO THE CITY OF WILMINGTON TRAFFIC ENGINEERING DIVISION AND PARKS AND RECREATION DEPARTMENT FOR REVIEW AND APPROVAL PRIOR TO THE RECORDING OF THE FINAL PLAT. (SD 15–14 COFW TECH STDS)

NOTE:
THE CRITICAL ROOT ZONE (CRZ) OF A TREE IS WHERE THE MAJORITY OF A TREE'S ROOTS LAY. 85% OF MOST TREE ROOTS ARE FOUND IN THE TOP 24" OF THE SOIL AND SUPPLY THE MAJORITY OF NUTRIENTS AND WATER. GENERALLY, ROOTS SPREAD OUT 2–3X THE HEIGHT OF THE TREE.

NOTE:
CROWN OF THE TREE IS NEEDED FOR LEAF GROWTH TO PRODUCE OXYGEN, FILTER THE AIR, REDUCE WIND AND SOFTEN NOISE. DO NOT DISFIGURE CROWN WITH INTENSIVE PRUNING.

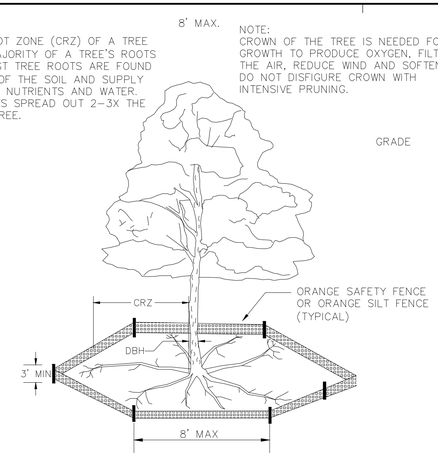

NOTES:
1. PROTECT CRITICAL ROOT ZONE (CRZ) OF TREES PRIOR TO CONSTRUCTION. CLEARLY MARK THE TREES AND ERECT A PROTECTIVE BARRIER AT THE CRZ. BARRIER SHALL BE MAINTAINED UNTIL CONSTRUCTION IS COMPLETE.
2. CRZ RADIUS IS 1 FT PER INCH OF TREE DIAMETER AT BREAST HEIGHT (DBH).
3. IF CONSTRUCTION OCCURS WITHIN THE CRZ, AT LEAST 12" OF MULCH AND/OR LOGGING MATTS SHALL BE PLACED WHERE MACHINERY MANEUVERS TO REDUCE SOIL COMPACTION IN THIS ZONE.
4. WHERE SIDEWALKS AND PATHWAYS PASS WITHIN CRZ, EXTRA CARE SHALL BE TAKEN TO AVOID DAMAGE TO THE ROOTS. ALTERNATE CONSTRUCTION METHODS, SUCH AS A REINFORCED SIDEWALK, SHALL BE IMPLEMENTED AS NECESSARY.
5. FOR ALL TREES, CUTTING OF LARGE STRUCTURAL ROOTS LOCATED NEAR THE BASE OF THE TRUNK IS PROHIBITED. DO NOT COMPACT SOIL BENEATH TREES. NO VEHICLE SHALL BE ALLOWED TO PARK UNDER TREES. NO MATERIALS OR EQUIPMENT SHALL BE STORED BENEATH TREES. DAMAGING THE BARK WITH LAWNMOWERS, CONSTRUCTION EQUIPMENT, OR ANYTHING ELSE IS PROHIBITED. CONTRACTOR SHALL REPAIR DAMAGE TO TREES.
6. FAILING TO INSTALL OR MAINTAIN PROTECTION MEASURES SHALL RESULT IN A STOP WORK ORDER AND FINE OF $500/DAY. DISTURBANCE OTHER THAN THAT ALLOWED ON THE APPROVED PLAN WILL REQUIRE OWNER TO POST A LETTER OF CREDIT FOR 3 YRS FOR TREE MITIGATION.

TREE PROTECTION DURING CONSTRUCTION

CITY OF WILMINGTON, NORTH CAROLINA DETAIL 15.09.1

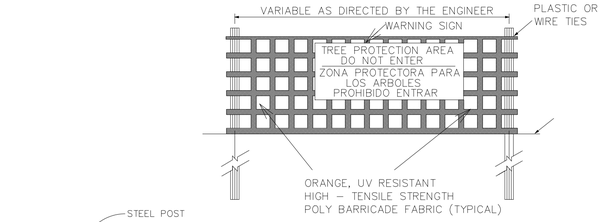

FRONT VIEW

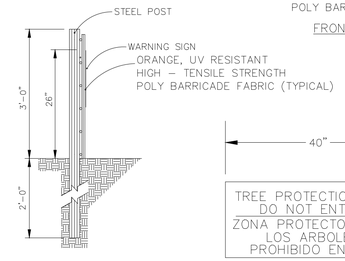

SIDE VIEW

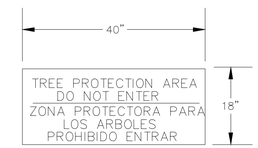

WARNING SIGN DETAIL

NOTES:

1. THE TREE PROTECTION FENCING SHALL NOT BE VIOLATED FOR THE ENTIRE DURATION OF THE PROJECT WITHOUT APPROVAL FROM URBAN FORESTRY STAFF.
2. WARNING SIGNS TO BE MADE OF DURABLE, WEATHERPROOF MATERIAL. LETTERS TO BE 3" HIGH, MINIMUM, CLEARLY LEGIBLE AND SPACED AS DETAILED.
3. SIGNS SHALL BE PLACED AT 50' MAXIMUM INTERVALS. PLACE A SIGN AT EACH END OF LINEAR TREE PROTECTION AND 50' ON CENTER THEREAFTER. FOR TREE PROTECTION AREAS LESS THAN 100' IN PERIMETER, PROVIDE NO LESS THAN TWO SIGNS PER PROTECTION AREA.
4. ATTACH SIGNS SECURELY TO FENCE POSTS AND FABRIC. MAINTAIN TREE PROTECTION FENCE AND SIGNS THROUGHOUT DURATION OF PROJECT.
5. TREE PROTECTION FENCING AND SIGNAGE SHALL BE REMOVED AFTER CONSTRUCTION.
6. ADDITIONAL SIGNS MAY BE REQUIRED BY CITY OF WILMINGTON, BASED ON ACTUAL FIELD CONDITIONS.

TREE PROTECTION DURING CONSTRUCTION

CITY OF WILMINGTON, NORTH CAROLINA DETAIL 15.09.2

Approved Construction Plan

	Name	Date
Planning		
Traffic		
Fire		

CITY OF WILMINGTON NORTH CAROLINA
Public Services Engineering Division
APPROVED STORMWATER MANAGEMENT PLAN
Date: _____ Permit #_____
Signed: _____

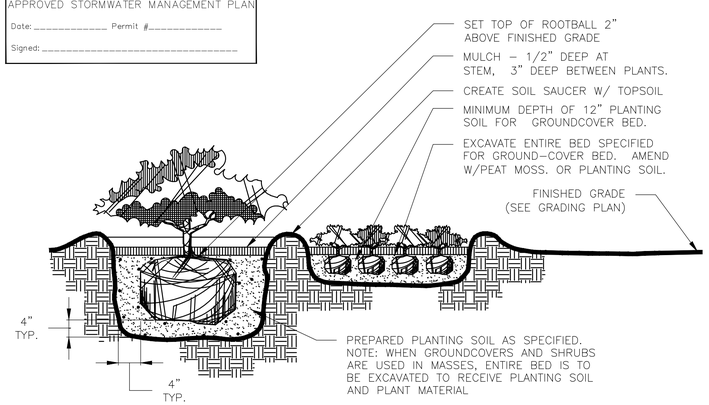

SHRUB PLANTING

N.T.S. 50B

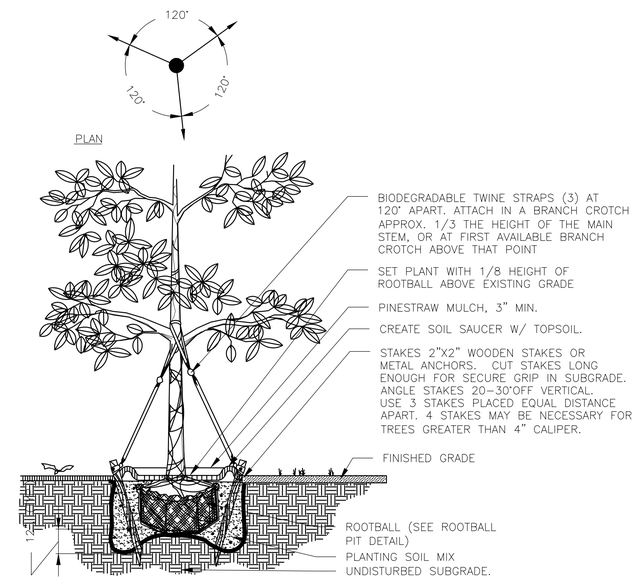

NOTE:
STRAPS, WIDE, SOFT, BIODEGRADABLE MATERIAL MANUFACTURED FOR THE PURPOSE OF TREE ANCHORING. DO NOT USE HOSE AND WIRE.

DECIDUOUS TREE PLANTING

N.T.S. 50A

GreenbergFarrow
COA#:
1430 W. Peachtree St. NW
Suite 200
Atlanta, GA 30309
t: 404 601 4000 f: 404 601 3970

PROJECT TEAM

COPYRIGHT NOTICE
This drawing is the property of the above referenced Professional and is not to be used for any purpose other than the specific project and site named herein, and cannot be reproduced in any manner without the express written permission from the Professional

ISSUE/REVISION RECORD

DATE	DESCRIPTION
10–20–15	SITE PLAN
12–02–15	DP SUBMITTAL
02–03–16	NCDOT RESUBMITTAL
02–03–16	COW SITE RESUBMITTAL

NORTH CAROLINA PROFESSIONAL SEAL ENGINEER JOHN H. NOURZAD
2/3/16

PROFESSIONAL IN CHARGE
HAMILTON WILLLIAMS
PROFESSIONAL ENGINEER
LICENSE NO. 023207
PROJECT MANAGER
LARRY DIEHL
QUALITY CONTROL
FEDERICO OLIVARES, PE
DRAWN BY
RYAN SCOTT, EIT

PROJECT NAME

CIRCLE K CAROLINA BEACH

WILMINGTON NORTH CAROLINA

3739 CAROLINA BEACH RD WILMINGTON, NC

PROJECT NUMBER
20151091

SHEET TITLE
LANDSCAPE DETAILS

SHEET NUMBER
L-1.1

NOT ISSUED FOR CONSTRUCTION