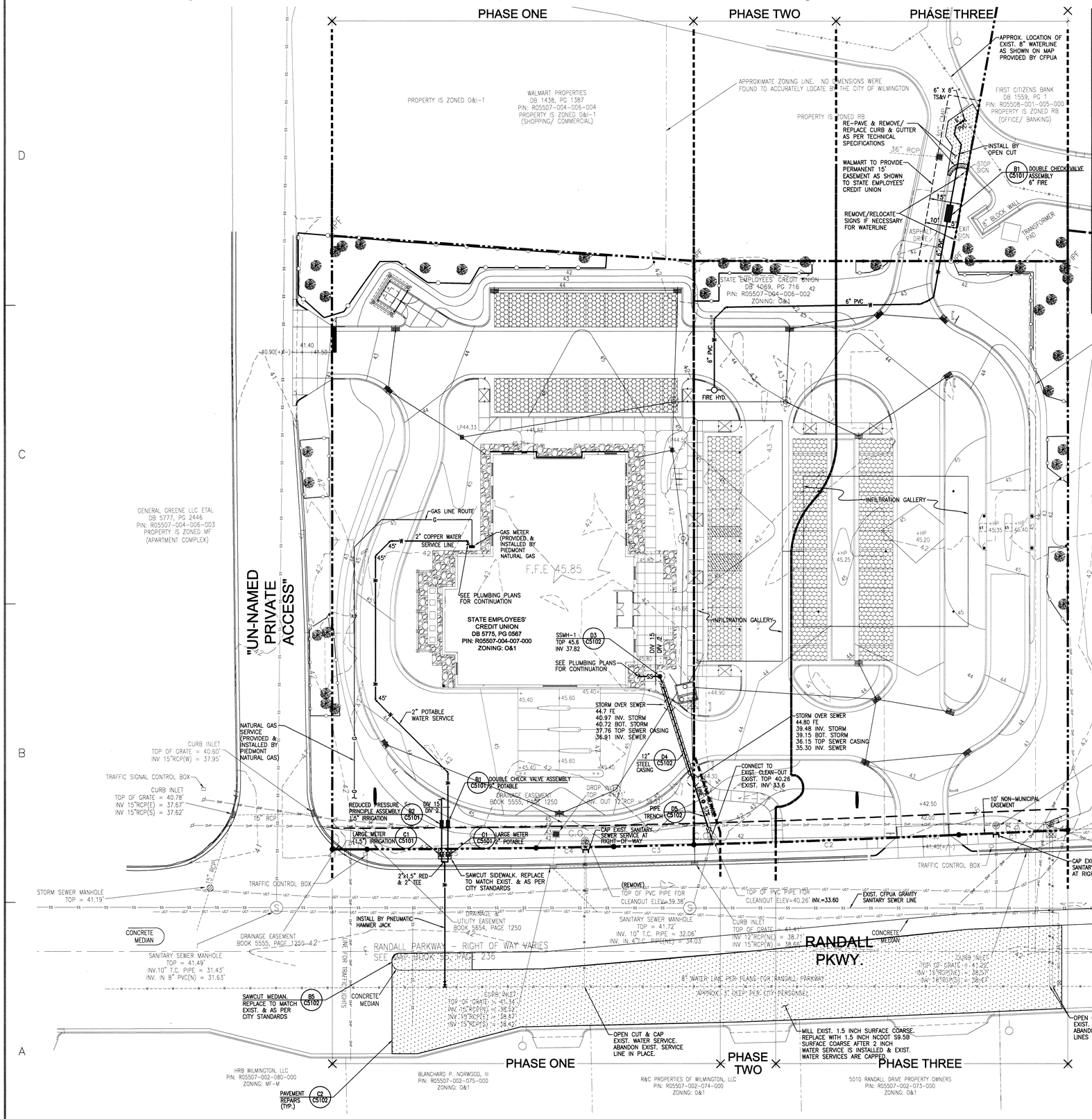

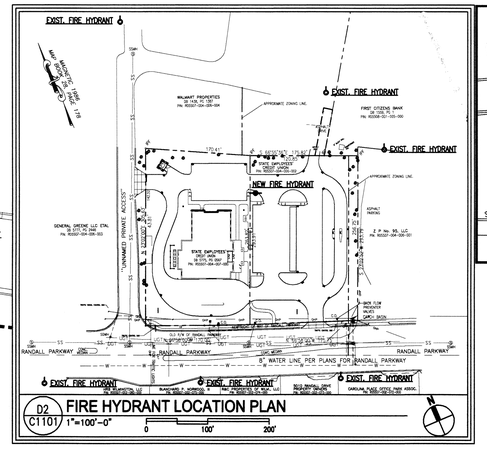

D2 C1101 FIRE HYDRANT LOCATION PLAN 1"=100'-0"

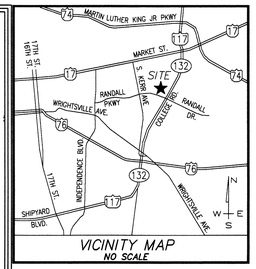

VICINITY MAP
NO SCALE

LEGEND

SSMH	SANITARY SEWER MANHOLE
SS	SANITARY SEWER
C.O.	CLEAN OUT
SSCO	SANITARY SEWER CLEAN OUT
W	POTABLE WATER
IW	IRRIGATION WATER
TS&V	TAPPING SLEEVE & VALVE
BFP	BACK FLOW PREVENTER
	WATER METER
INV	INVERT
	WATER VALVE

CONSTRUCTION SEQUENCE:

1. REQUEST PRECONSTRUCTION MEETING WITH CFPUA AND CITY.
2. UPON COMPLETION OF PRECONSTRUCTION MEETING AND SATISFACTION OF SUBSEQUENT REQUESTS / REQUIREMENTS OF CFPUA AND CITY, COORDINATE WITH CFPUA AND CITY REGARDING PROCEDURE FOR INSTALLATION OF WATER AND SEWER SERVICES.
3. COORDINATE WITH CFPUA AND CITY INSPECTION REQUIREMENTS FOR CFPUA AND CITY INSPECTORS.
4. UPON FULL AGREEMENT AND APPROVAL WITH CFPUA AND CITY, PERFORM WORK.
5. CONTACT CFPUA AND CITY DAILY DURING UTILITY WORK REGARDING INSPECTIONS AND OTHER CFPUA AND CITY REQUIREMENTS.
6. COORDINATE TESTING REQUIREMENTS WITH CFPUA AND CITY, INCLUDING BUT NOT LIMITED TO, FLUSHING, BAC-T, PRESSURE, PROOF-ROLLING, COMPACTION, ETC.
7. UPON FULL AGREEMENT AND APPROVAL WITH CFPUA AND CITY, PERFORM TESTING.

ENGINEER NOTES:

1. CONTRACTOR TO OBTAIN CITY ENCROACHMENT PERMIT FOR WORK IN CITY RIGHT-OF-WAY. PROVIDE TRAFFIC CONTROL FOR WORK IN PUBLIC ROADWAY AS PER CITY STANDARDS. CALL SKIPPER FUNDERBURG 910-341-5899.
2. UNLESS OTHERWISE NOTED, PROVIDE 3 FT. MINIMUM COVER OVER ALL UTILITIES.
3. PROPERTY IS NOT WITHIN A DESIGNATED FLOOD PLAIN.

CFPUA SEWER NOTES:

1. SEWER GUARDS REQUIRED IN MANHOLES. STAINLESS STEEL SEWER GUARDS ARE REQUIRED FOR SS MANHOLES LOCATED IN TRAFFIC AREAS.
2. SEWER SERVICE SHALL BE INSTALLED PERPENDICULAR TO MAINS & TERMINATE AT THE PROPERTY/EASEMENT LINE PER STANDARD DETAIL.
3. ALL SERVICES CONNECTING TO DIP MAINS SHALL BE CONSTRUCTED OF CLASS 50 DIP, WITH PROTECTO 401 CERAMIC EPOXY LINING.
4. A MINIMUM OF 10' UTILITY EASEMENT IS REQUIRED ALONG THE FRONTAGE OF ALL LOTS.
5. NO FLEXIBLE COUPLINGS ARE PERMITTED.

WATER AND SEWER PHASING:

ALL WATER & SEWER WORK INSTALLED IN PHASE 1.

CITY OF WILMINGTON NOTES

1. ALL PAVEMENT MARKINGS IN PUBLIC RIGHTS-OF-WAY AND FOR DRIVEWAYS ARE TO BE THERMOPLASTIC AND MEET CITY AND/OR NCDOT STANDARDS. [DETAIL SD-13 COFW TECH STDS]
2. ALL SIGNS AND PAVEMENT MARKINGS IN AREAS OPEN TO PUBLIC TRAFFIC ARE TO MEET MUTCD (MANUAL ON UNIFORM TRAFFIC CONTROL DEVICES) STANDARDS. [DETAIL SD 15-13 COFW TECH STDS]
3. ALL TRAFFIC CONTROL SIGNS AND MARKINGS OFF THE RIGHT-OF-WAY ARE TO BE MAINTAINED BY THE PROPERTY OWNER IN ACCORDANCE WITH MUTCD STANDARDS.
4. ALL PARKING STALL MARKINGS AND LANE ARROWS WITHIN THE PARKING AREAS SHALL BE WHITE.
5. A UTILITY CUT PERMIT IS REQUIRED FOR EACH OPEN CUT OF A CITY STREET. NOTE THIS ON THE PLAN AND CONTACT 341-5888 FOR MORE DETAILS. IN CERTAIN CASES AN ENTIRE RESURFACING OF THE AREA BEING OPEN CUT MAY BE REQUIRED.
6. INSTALL REFLECTORS PER CITY AND NCDOT STANDARDS. TRAFFIC ENGINEERING MUST APPROVE OF PAVEMENT MARKING LAYOUT PRIOR TO ACTUAL STRIPING.
7. ANY BROKEN OR MISSING SIDEWALK PANELS, DRIVEWAY PANELS AND CURBING WILL BE REPLACED.
8. CONTACT TRAFFIC ENGINEERING AT 341-7888 FORTY-EIGHT HOURS PRIOR TO ANY EXCAVATION IN THE RIGHT OF WAY.

WATER AND SEWER CAPACITY NEEDS

WATER:	375 GPD (CURRENT USE)
WATER:	375 GPD (PROPOSED USE)
SEWER:	375 GPD (CURRENT USE)
SEWER:	375 GPD (PROPOSED USE)

For each open utility cut of City streets, a $325 permit shall be required from the City prior to occupancy and/or project acceptance.

Approved Construction Plan

	Name	Date
Planning		
Traffic		
Fire		

A5 C1101 UTILITY PLAN 1"=20'-0"

OBrienAtkins
Architecture/Engineering/Landscape Architecture/Planning/Interior Design
OBrien Atkins Associates, PA
5200 Paramount Parkway
Morrisville, NC 27560
919.941.5500 - Durham
919.872.1087 - Raleigh
Research Triangle Park,
North Carolina 27709
919.941.9005 - Fax
www.obrienatkins.com

REGISTERED ARCHITECTURAL FIRM O'BRIEN ATKINS ASSOCIATES, P.A. CERT. NO. 171 NORTH CAROLINA

NORTH CAROLINA PROFESSIONAL SEAL 24419 ENGINEER MARK T. ARCURI

Apr. 21, 2014

CRISER TROUTMAN TANNER
Civil Engineering of Wilmington
3809 Pendleton Ave., Suite 102
Wilmington, NC 28403
910.397.2309 Ph.
910.397.2323 Fax
www.criserteamwilmington.com
NC FIRM LICENSE No. 10813
CRISER TROUTMAN TANNER
CTT JOB #9075

State Employees' Credit Union

Wilmington Randall Parkway Office
5011 Randall Parkway
Wilmington, North Carolina

Issued	Date	By
CD	01/10/14	MTA
CD	01/15/14	MTA
CD	01/27/14	MTA
CD	02/27/14	MTA
CD	03/04/14	MTA
CD	03/05/14	MTA
CD	03/19/14	MTA
CD	04/09/14	MTA
CD	04/21/14	MTA

Project No. 2013031
Checked By MTA
Drawn By HWL
Scale NOTED
Drawing UTILITY PLAN
File Name
Sheet C1101
OF SHEETS

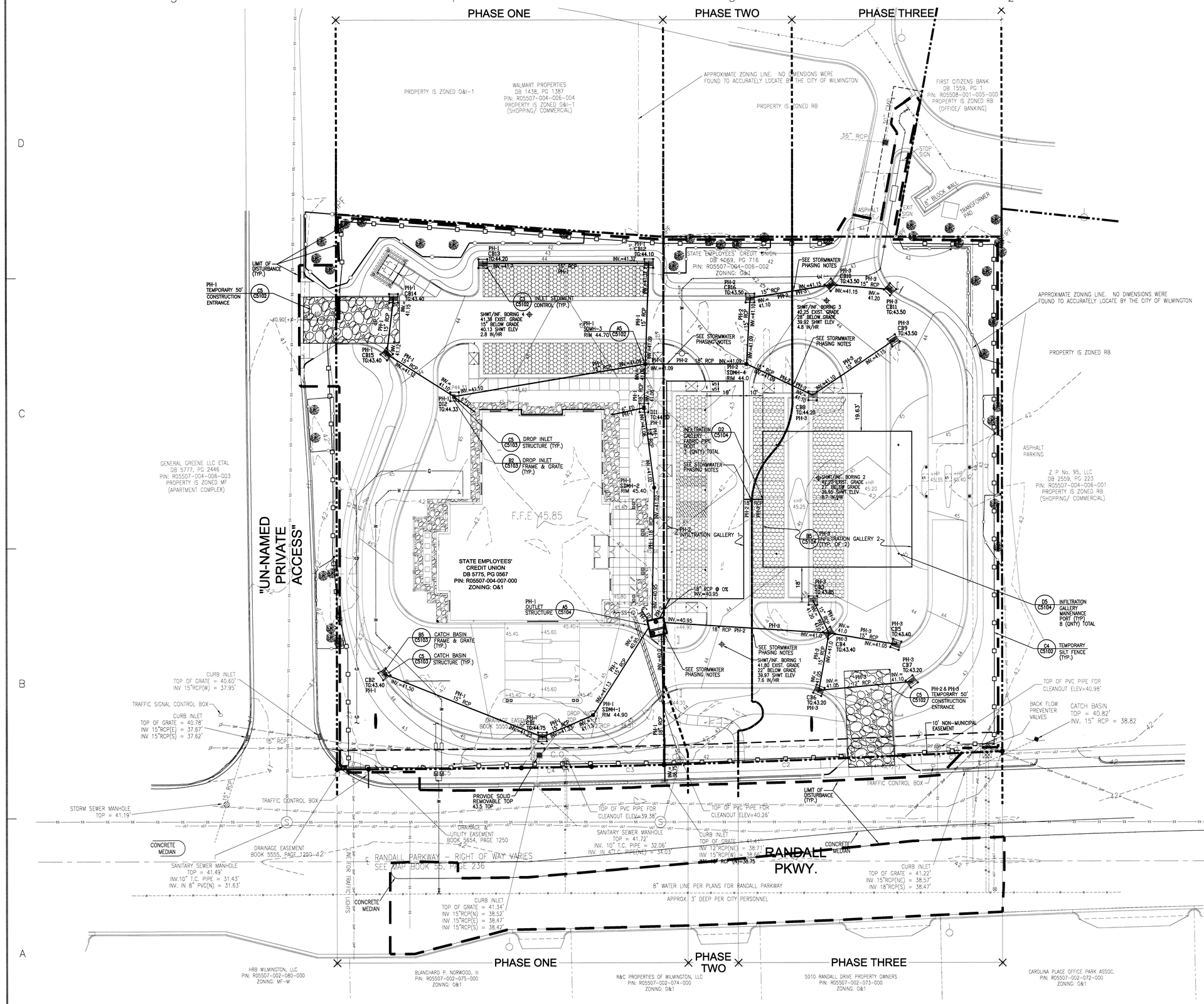

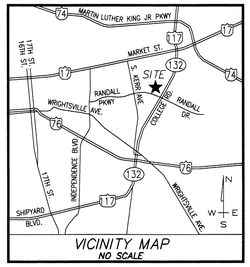

VICINITY MAP
NO SCALE

LEGEND

PH-1	INDICATES WORK PHASE
F.F.E.	FINISH FLOOR ELEVATION
INV	INVERT
RCP	REINFORCED CONCRETE PIPE
FD	FOUNDATION DRAIN
TG	TOP OF GRATE
DI	DROP INLET
CB	CATCH BASIN
JB	JUNCTION BOX
SDMH	STORM DRAIN MANHOLE
	LIMIT OF DISTURBANCE
	TEMPORARY INLET PROTECTION
	TEMPORARY SILT FENCE

STORMWATER PHASES:

PHASE 1: (PH-1)
1. INSTALL STORM STRUCTURES & PIPING LABELED PH-1.
   A. CAP/PLUG STORM PIPE WHERE INDICATED ALONG PHASE LINE BETWEEN PHASE ONE & PHASE TWO.
2. OUTLET STRUCTURE:
   A. DO NOT CONSTRUCT WEIR WALL INSIDE OUTLET STRUCTURE THIS PHASE SO THAT WATER FLOWS DIRECTLY TO PUBLIC STORMWATER SYSTEM IN RANDALL PARKWAY.
   B. PLUG PIPE INLET OPENING ON EAST SIDE OF STRUCTURE.
   C. PLUG PIPE OUTLET OPENING ON NORTH SIDE OF STRUCTURE.

PHASE 2: (PH-2)
3. INSTALL INFILTRATION GALLERY 1, STORM STRUCTURES, & PIPING LABELED PH-2.
   A. REMOVE STORM PIPE CAP WHERE INDICATED ALONG PHASE LINE BETWEEN PHASE ONE & PHASE TWO.
   B. CAP/PLUG STORM PIPE WHERE INDICATED ALONG PHASE LINE BETWEEN PHASE TWO & PHASE THREE.
4. OUTLET STRUCTURE:
   A. DO NOT CONSTRUCT WEIR WALL INSIDE OUTLET STRUCTURE THIS PHASE SO THAT WATER FLOWS DIRECTLY TO PUBLIC STORMWATER SYSTEM IN RANDALL PARKWAY.

PHASE 3: (PH-3)
5. INSTALL INFILTRATION GALLERY 2, STORM STRUCTURES, & PIPING LABELED PH-3.
   A. REMOVE STORM PIPE CAP WHERE INDICATED ALONG PHASE LINE BETWEEN PHASE TWO & PHASE THREE.
6. OUTLET STRUCTURE:
   A. CONSTRUCT WEIR WALL INSIDE OUTLET STRUCTURE.
   B. UNPLUG PIPE INLET OPENING ON EAST SIDE OF STRUCTURE.
   C. UNPLUG PIPE OUTLET OPENING ON NORTH SIDE OF STRUCTURE.
   D. WATER WILL THEN PERMANENTLY FLOW INTO INFILTRATION GALLERIES.

NOTES:
1. BASE SURVEY SUPPLIED BY OBRIEN ATKINS ASSOCIATES, P.A. AND PREPARED BY ROBERT H. GOSLEE & ASSOCIATES, PA DATED SEPTEMBER 3, 2013.
2. HORIZONTAL DATUM IS UNKNOWN.
3. VERTICAL DATUM IS NAVD88.
4. NO WETLANDS EXIST ON SITE.
5. ALL ROOF DRAINAGE SHALL BE DIRECTED TO THE STORM DRAIN SYSTEM, SO AS TO DRAIN TO POND.
6. THIS PROJECT IS IN THE CAPE FEAR RIVER BASIN.
7. THIS PROJECT DRAINS TO BURNT MILL CREEK, WHICH IS CLASSIFIED AS A C;Sw SURFACE WATER.
8. EXISTING SOIL TYPE ON SITE IS PRIMARILY Le (LEON SAND).

STORMWATER AS-BUILT REQUIREMENTS:
1. CONTRACTOR SHALL PROVIDE AN AS-BUILT SURVEY PREPARED BY A NC LICENSED PROFESSIONAL LAND SURVEYOR OF ALL STORMWATER PROVISIONS INSTALLED, INCLUDING STRUCTURES, PIPES, AND INFILTRATION GALLERIES.
2. STRUCTURE TOP ELEVATIONS AND INVERT ELEVATIONS FOR EACH CONNECTING PIPE SHALL BE SHOWN FOR ALL STRUCTURES. ALL PIPE SIZES AND INVERTS SHALL BE SHOWN.
3. BECAUSE AS-BUILT SURVEY IS REQUIRED OF INFILTRATION GALLERIES, SOME SURVEYING IS REQUIRED BEFORE THOSE FACILITIES ARE COVERED UP. PROVIDE SURVEYING AS NECESSARY TO PROPERLY DEPICT INSTALLED GALLERIES.
4. ONCE REVIEWED BY ENGINEER, REVISED BY CONTRACTOR, AND APPROVED BY ENGINEER, ENGINEER WILL SUBMIT TO CITY FOR APPROVAL. CITY SITE INSPECTION AND AS-BUILT APPROVAL IS REQUIRED PRIOR TO CERTIFICATION OF OCCUPANCY.

For each open utility cut of City streets, a $325 permit shall be required from the City prior to occupancy and/or project acceptance.

STORMWATER MANAGEMENT PLAN
APPROVED
CITY OF WILMINGTON
ENGINEERING DEPARTMENT
DATE _____ PERMIT # _____
SIGNED_____

Approved Construction Plan

	Name	Date
Planning		
Traffic		
Fire		

DISTURBED AREA = 2.28 AC

A5 C1201 STORMWATER PLAN 1"=20'-0"

0 20' 40'

OBrienAtkins
Architecture/Engineering/Landscape Architecture/Planning/Interior Design
OBrien/Atkins Associates, PA.
5200 Green Park
Research Triangle Park,
North Carolina 27709
919.54.6000 Durham
919.755.1032 Raleigh
919.941.5006 Fax
www.obrienatkins.com

CERT. NO. 171
NORTH CAROLINA
SEAL 24419
MARK T. ARCURI
Apr. 21, 2014

CRISER TROUTMAN TANNER
3609 Peachtree Ave., Suite 102
Raleigh, North Carolina 27604
910.397.2929
910.397.2930 Fax
www.criser-troutman-tanner.com
NC FIRM LICENSE No. 10013
CRISER TROUTMAN TANNER
CTT JOB #2015

State Employees' Credit Union

Wilmington Randall Parkway Office
5011 Randall Parkway
Wilmington, North Carolina

Issued	Date	By
CD	01/10/14	MTA
CD	01/15/14	MTA
CD	01/27/14	MTA
CD	02/27/14	MTA
CD	03/04/14	MTA
CD	03/19/14	MTA
CD	04/21/14	MTA

Project No. 2013031
Checked By MTA
Drawn By HWL
Scale NOTED
Drawing STORMWATER PLAN
File Name
Sheet C1201
OF SHEETS

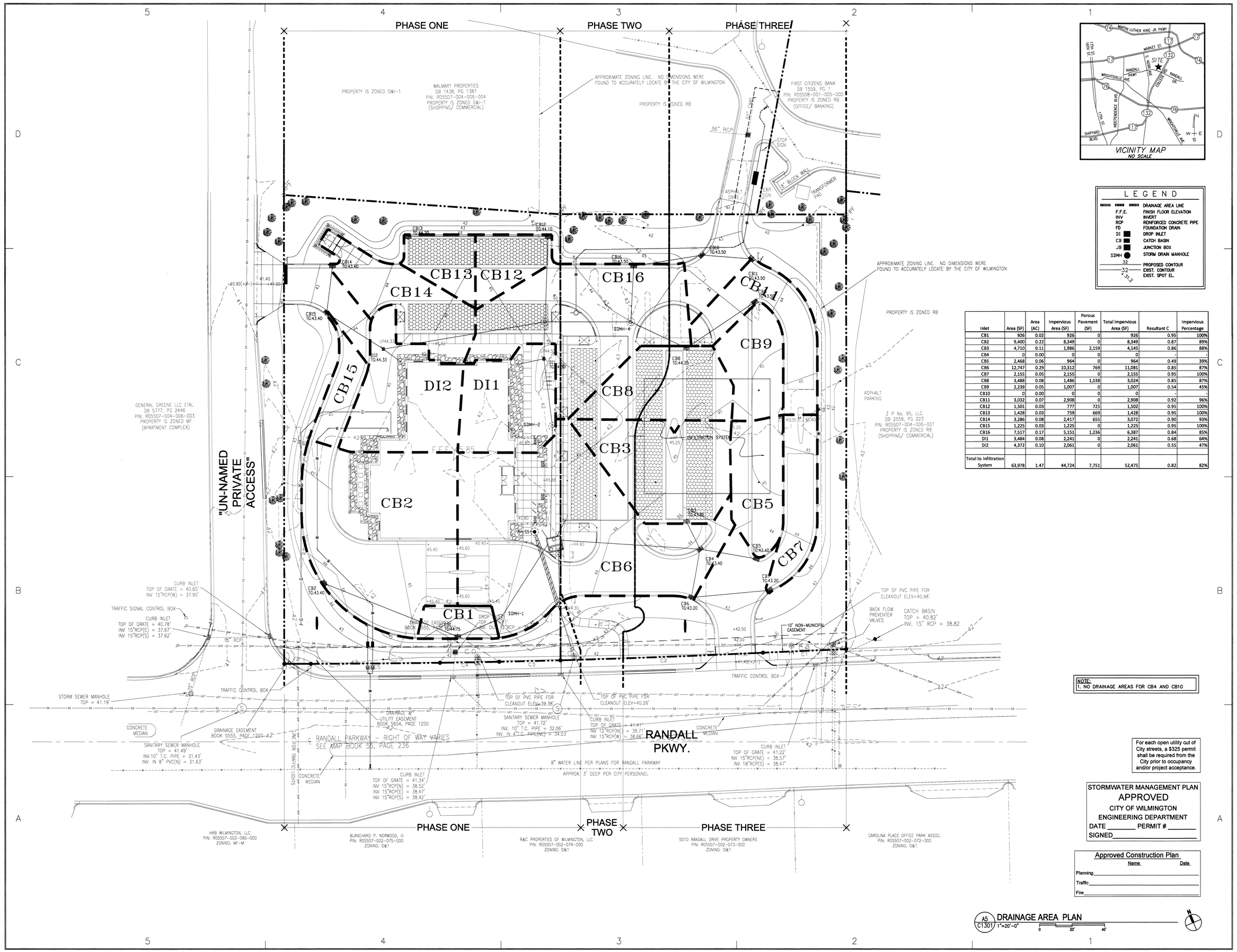

VICINITY MAP
NO SCALE

LEGEND

	DRAINAGE AREA LINE
F.F.E.	FINISH FLOOR ELEVATION
INV	INVERT
RCP	REINFORCED CONCRETE PIPE
FD	FOUNDATION DRAIN
DI	DROP INLET
CB	CATCH BASIN
JB	JUNCTION BOX
SDMH	STORM DRAIN MANHOLE
32	PROPOSED CONTOUR
32	EXIST. CONTOUR
x 31.2	EXIST. SPOT EL.

Inlet	Area (SF)	Area (AC)	Impervious Area (SF)	Porous Pavement (SF)	Total Impervious Area (SF)	Resultant C	Impervious Percentage
CB1	926	0.02	926	0	926	0.95	100%
CB2	9,400	0.22	8,349	0	8,349	0.87	89%
CB3	4,710	0.11	1,986	2,159	4,145	0.86	88%
CB4	0	0.00	0	0	0	-	-
CB5	2,468	0.06	964	0	964	0.49	39%
CB6	12,747	0.29	10,312	769	11,081	0.85	87%
CB7	2,155	0.05	2,155	0	2,155	0.95	100%
CB8	3,488	0.08	1,486	1,538	3,024	0.85	87%
CB9	2,239	0.05	1,007	0	1,007	0.54	45%
CB10	0	0.00	0	0	0	-	-
CB11	3,032	0.07	2,908	0	2,908	0.92	96%
CB12	1,501	0.03	777	725	1,502	0.95	100%
CB13	1,428	0.03	759	669	1,428	0.95	100%
CB14	3,286	0.08	2,417	655	3,072	0.90	93%
CB15	1,225	0.03	1,225	0	1,225	0.95	100%
CB16	7,517	0.17	5,151	1,236	6,387	0.84	85%
DI1	3,484	0.08	2,241	0	2,241	0.68	64%
DI2	4,372	0.10	2,061	0	2,061	0.55	47%
Total to Infiltration System	63,978	1.47	44,724	7,751	52,475	0.82	82%

NOTE:
1. NO DRAINAGE AREAS FOR CB4 AND CB10

For each open utility cut of City streets, a $325 permit shall be required from the City prior to occupancy and/or project acceptance.

STORMWATER MANAGEMENT PLAN
APPROVED
CITY OF WILMINGTON
ENGINEERING DEPARTMENT
DATE _____ PERMIT # _____
SIGNED_____

Approved Construction Plan

	Name	Date
Planning		
Traffic		
Fire		

A5 / C1301 DRAINAGE AREA PLAN
1"=20'-0"
0 20' 40'

OBrienAtkins
Architecture/Engineering/Landscape Architecture/Planning/Interior Design
919.941.9000 - Durham
919.790.1500 - Raleigh
919.941.9009 - Fax
www.obrienatkins.com
O'Brien/Atkins Associates, PA
5540 Centerview Drive
Research Triangle Park
North Carolina 27709

O'BRIEN / ATKINS ASSOCIATES, P.A. REGISTERED ARCHITECTURAL CORPORATION CERT. NO. 171 NORTH CAROLINA

NORTH CAROLINA PROFESSIONAL SEAL 24419 ENGINEER MARK T. ARCURI
Apr. 21 2014

JORDER TROUTMAN TANNER CONSULTING ENGINEERS
3809 Pinetree Ave., Suite 102
Wilmington, NC 28403
910.397.2229 Ph.
910.397.2277 Fax
www.criserttengineering.com
NC FIRM LICENSE No. F-0113

CRISER TROUTMAN TANNER
CT JOB #1705

State Employees' Credit Union
Wilmington Randall Parkway Office
5011 Randall Parkway
Wilmington, North Carolina

Issued	Date	By
CD	01/10/14	MTA
CD	01/15/14	MTA
CD	01/27/14	MTA
CD	02/27/14	MTA
CD	04/21/14	MTA

Project No. 2013031
Checked By MTA
Drawn By HWL
Scale NOTED
Drawing DRAINAGE AREA PLAN
File Name
Sheet C1301
OF SHEETS

NOTES:
1. NO JOINT SHALL BE INSTALLED BETWEEN THE MAIN SERVICE TAP AND THE METER STOP. ALL SERVICES SHALL BE INSTALLED PERPENDICULAR TO MAIN.
2. SERVICE SADDLES ON PVC MAINS SHALL BE WIDE BAND BRASS BODY: SADDLE McDONALD 3800, OR EQUIVALENT.
3. METER BOXES SUSCEPTIBLE TO TRAFFIC SHALL CONFORM TO ASTM A48, CLASS 30B AND AASHTO H20 LOAD RATING STANDARDS (SIP MODEL 4240 OR APPROVED EQUIVALENT).

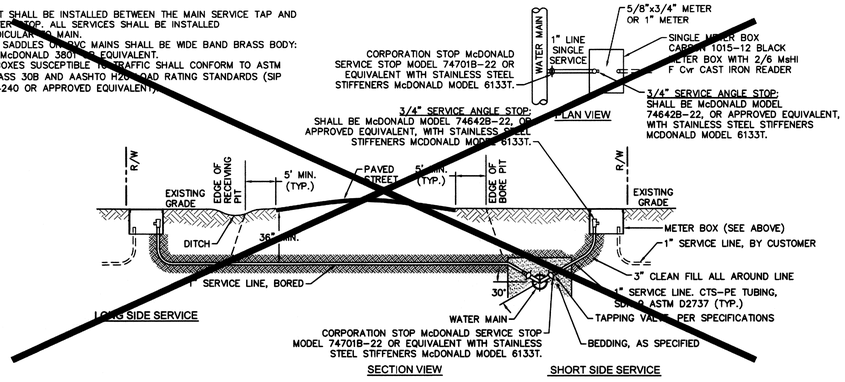

SINGLE SERVICE CONNECTION

TYPICAL WATER SERVICE CONNECTION FOR RESIDENTIAL SINGLE FAMILY HOME ON CFPUA WATER SYSTEM

NOT TO SCALE

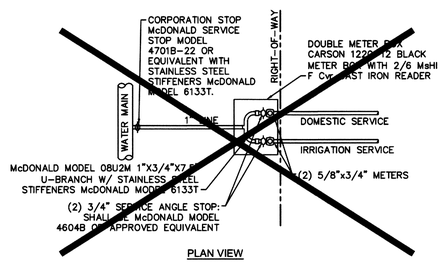

DOUBLE SERVICE CONNECTION

(ONE DOMESTIC SERVICE PER TAP)

NOT TO SCALE

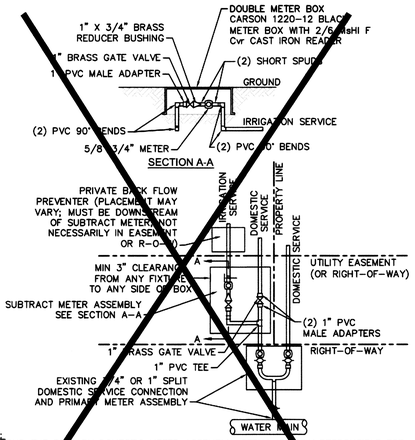

NOTES:
1. BEYOND THE PRIMARY DOMESTIC METER ASSEMBLY, CFPUA IS ONLY RESPONSIBLE FOR METER AND WASHERS OF SUBTRACT METER ASSEMBLY.
2. ALL PIPE AND FITTINGS UP TO FINAL SERVICE LINE TO BE 1" EXCLUDING METERS.

PLAN VIEW

DOUBLE SERVICE CONNECTION USING SUBTRACT METER

(MULTIPLE DOMESTIC SERVICES PER TAP)

NOT TO SCALE

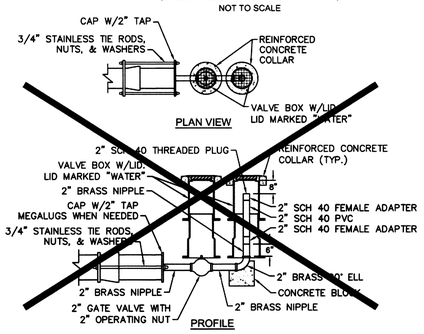

2" BLOW-OFF

NOT TO SCALE

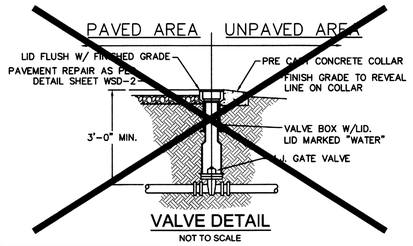

VALVE DETAIL

NOT TO SCALE

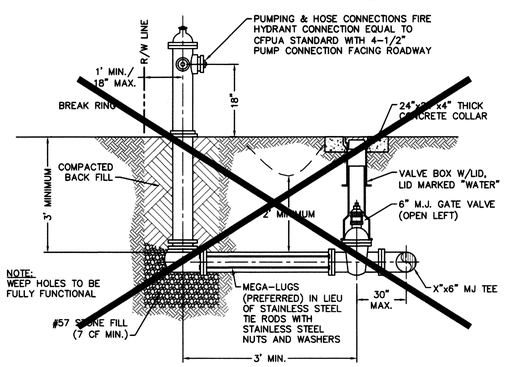

NOTE:
NO FIRE HYDRANT OR VALVE TO BE PLACED WITHIN LIMITS OF DITCH.

FIRE HYDRANT ASSEMBLY

NOT TO SCALE

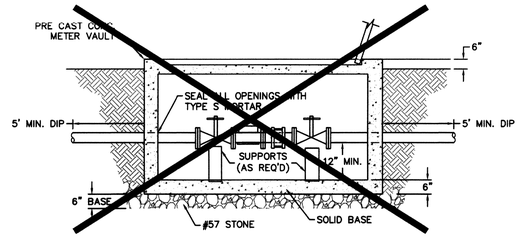

METER VAULT SECTION A-A

NOT TO SCALE

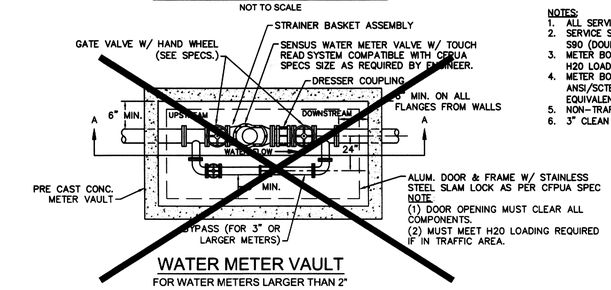

NOTE:
(1) DOOR OPENING MUST CLEAR ALL COMPONENTS.
(2) MUST MEET H20 LOADING REQUIRED IF IN TRAFFIC AREA.

WATER METER VAULT

FOR WATER METERS LARGER THAN 2"

NOT TO SCALE

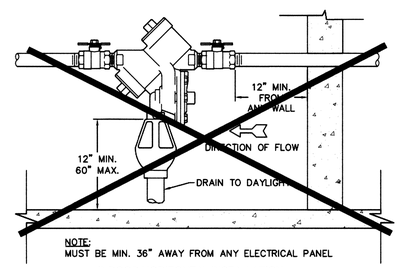

NOTE:
MUST BE MIN. 36" AWAY FROM ANY ELECTRICAL PANEL

INDOOR HORIZONTAL INSTALLATION

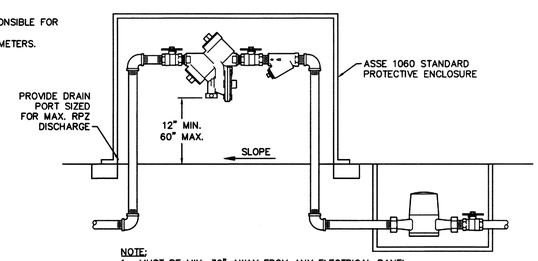

NOTE:
1. MUST BE MIN. 36" AWAY FROM ANY ELECTRICAL PANEL.
2. VALVE REQUIRED DOWNSTREAM OF BACKFLOW ASSEMBLY.
3. VERTICAL INSTALLATION SHALL BE DESIGNED AND SUBMITTED TO CFPUA ESMD FOR APPROVAL.

OUTDOOR HORIZONTAL INSTALLATION

B2 C5101

REDUCED PRESSURE PRINCIPLE ASSEMBLY

NOT TO SCALE

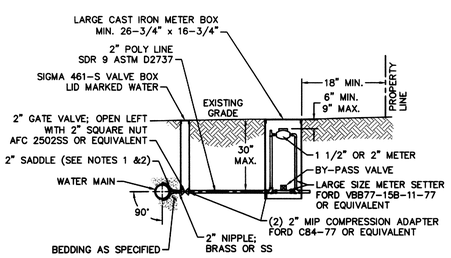

NOTES:
1. ALL SERVICES SHALL BE INSTALLED PERPENDICULAR TO MAIN.
2. SERVICE SADDLES ON PVC MAINS SHALL BE WIDE BAND BRASS BODY: McDONALD 3800, FORD S90 (DOUBLE STRAP) OR EQUIVALENT.
3. METER BOXES SUSCEPTIBLE TO TRAFFIC SHALL CONFORM TO ASTM A48, CLASS 30B AND AASHTO H20 LOAD RATING STANDARDS (OLDCASTLE PRECAST MODEL B1730 OR APPROVED EQUIVALENT).
4. METER BOXES SUSCEPTIBLE TO INCIDENTAL, NON-DELIBERATE TRAFFIC SHALL CONFORM TO ANSI/SCTE 77 TIER 15 LOAD RATING STANDARDS (SYNERTECH MODEL DUO 17x30 OR APPROVED EQUIVALENT).
5. NON-TRAFFIC METER BOXES SHALL BE SIGMA MB2203 OR APPROVED EQUIVALENT.
6. 3" CLEAN FILL REQUIRED ALL AROUND 2" POLY SERVICE LINE.

C1 C5101

LARGE METER

FOR 1-1/2" OR 2" WATER SERVICES

NOT TO SCALE

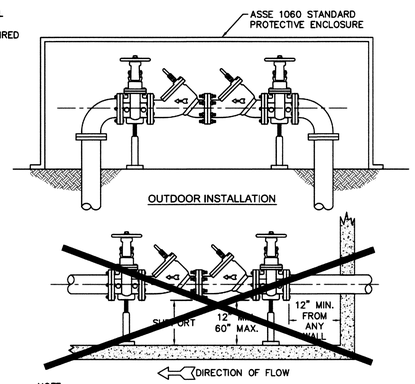

NOTE:
1. MUST BE MIN. 36" AWAY FROM ANY ELECTRICAL PANEL.
2. VALVE REQUIRED DOWNSTREAM OF BACKFLOW ASSEMBLY.
3. VERTICAL INSTALLATION SHALL BE DESIGNED AND SUBMITTED TO CFPUA ESMD FOR APPROVAL.

INDOOR INSTALLATION

B1 C5101

DOUBLE CHECK VALVE ASSEMBLY

NOT TO SCALE

GENERAL NOTES:
1. NO EXCAVATED MATERIAL SHALL BE PLACED IN ANY STREAM, DITCH OR DRAINAGE-WAY.
2. THE CONTRACTOR IS RESPONSIBLE FOR LOCATING ALL UNDERGROUND UTILITIES BEFORE ANY CONSTRUCTION BEGINS.
3. THE CONTRACTOR IS RESPONSIBLE FOR TEMPORARY SEDIMENT AND EROSION CONTROL MEASURES WHILE CONSTRUCTION IS IN PROGRESS.
4. THE CONTRACTOR IS RESPONSIBLE FOR STABILIZATION OF ALL DISTURBED AREAS.
5. THE CONTRACTOR IS RESPONSIBLE FOR LAY DOWN AND STOCKPILE AREAS (TO ARRANGE AND ENSURE COMPLIANCE WITH ALL LOCAL AND STATE REGULATIONS).

THE DETAILS SHOWN HEREON SUPERCEDE CFPUA WRITTEN TECHNICAL SPECIFICATIONS VERSIONS 1.00 - 1.04

REV:	DESCRIPTION:	DATE:
1	Single Service Connection, Double Service Connection, and Large Meter Revised	10/26/12
2	Single Service Connection and Fire Hydrant Details Revised	7/23/13

CFPUA WATER DISTRIBUTION SYSTEM

STANDARD DETAILS

CAPE FEAR PUBLIC UTILITY AUTHORITY
235 GOVERNMENT CENTER DRIVE
WILMINGTON, NC 28403
OFFICE: (910)332-6560
Stewardship. Sustainability. Service.

DATE: 1/9/12
SCALE: N/A
DRAWN BY: CFPUA
CHECKED BY: CFPUA
PROJECT NO.:

SHEET NO: WSD-1

Approved Construction Plan
Name Date
Planning
Traffic
Fire

For each open utility cut of City streets, a $325 permit shall be required from the City prior to occupancy and/or project acceptance.

OBrienAtkins
Architecture/Engineering/Landscape Architecture/Planning/Interior Design
O'Brien/Atkins Associates, P.A. 5200 Green Park Drive Research Triangle Park North Carolina 27709
919.541.9000 Durham
919.541.9001 Raleigh
919.541.9008 Fax
www.obrienatkins.com

NORTH CAROLINA PROFESSIONAL SEAL 24419 ENGINEER MARK T. ARCURI
Mar 4, 2014

CRISER TROUTMAN TANNER CONSULTING ENGINEERS
3809 Peachtree Ave. Suite 102 Durham, NC 27707 Ph. 919.387.2309 Fax 919.387.2320 www.crisertroutmantanner.com NC FIRM LICENSE No. F0313
CTT JOB #7075

State Employees' Credit Union
Wilmington Randall Parkway Office
5011 Randall Parkway
Wilmington, North Carolina

Issued	Date	By
DD	10/25/13	MTA
DD	10/31/13	MTA
CD	01/10/14	MTA
CD	01/15/14	MTA
CD	01/27/14	MTA
CD	02/27/14	MTA
CD	03/04/14	MTA

Project No. 2013031
Checked By MTA
Drawn By HWL
Scale NOT TO SCALE
Drawing WATERLINE DETAILS
File Name C5101.dwg
Sheet C5101 OF SHEETS

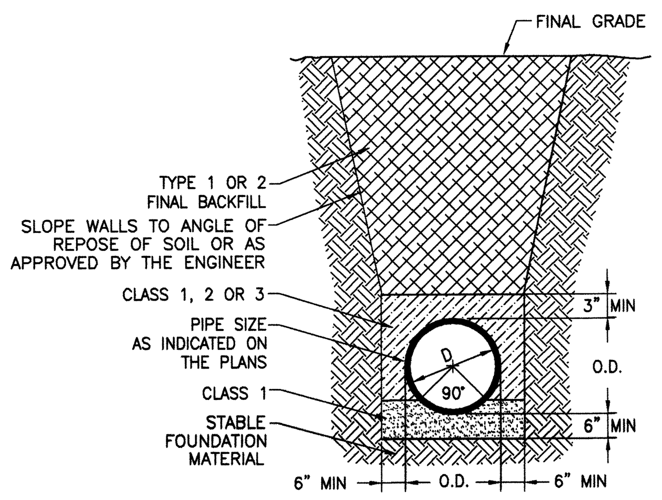

D5 / C5102 **PIPE TRENCH**
N.T.S.

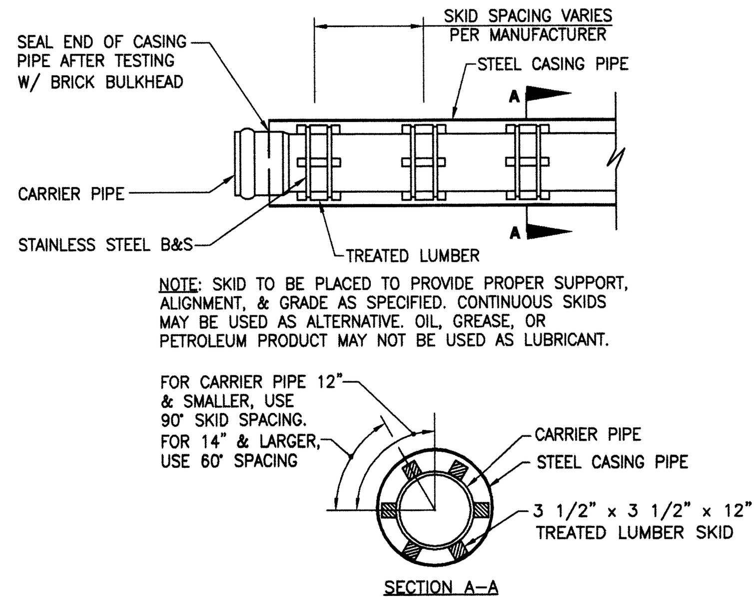

NOTE: SKID TO BE PLACED TO PROVIDE PROPER SUPPORT, ALIGNMENT, & GRADE AS SPECIFIED. CONTINUOUS SKIDS MAY BE USED AS ALTERNATIVE. OIL, GREASE, OR PETROLEUM PRODUCT MAY NOT BE USED AS LUBRICANT.

D4 / C5102 **PIPE CASING SKID**
N.T.S.

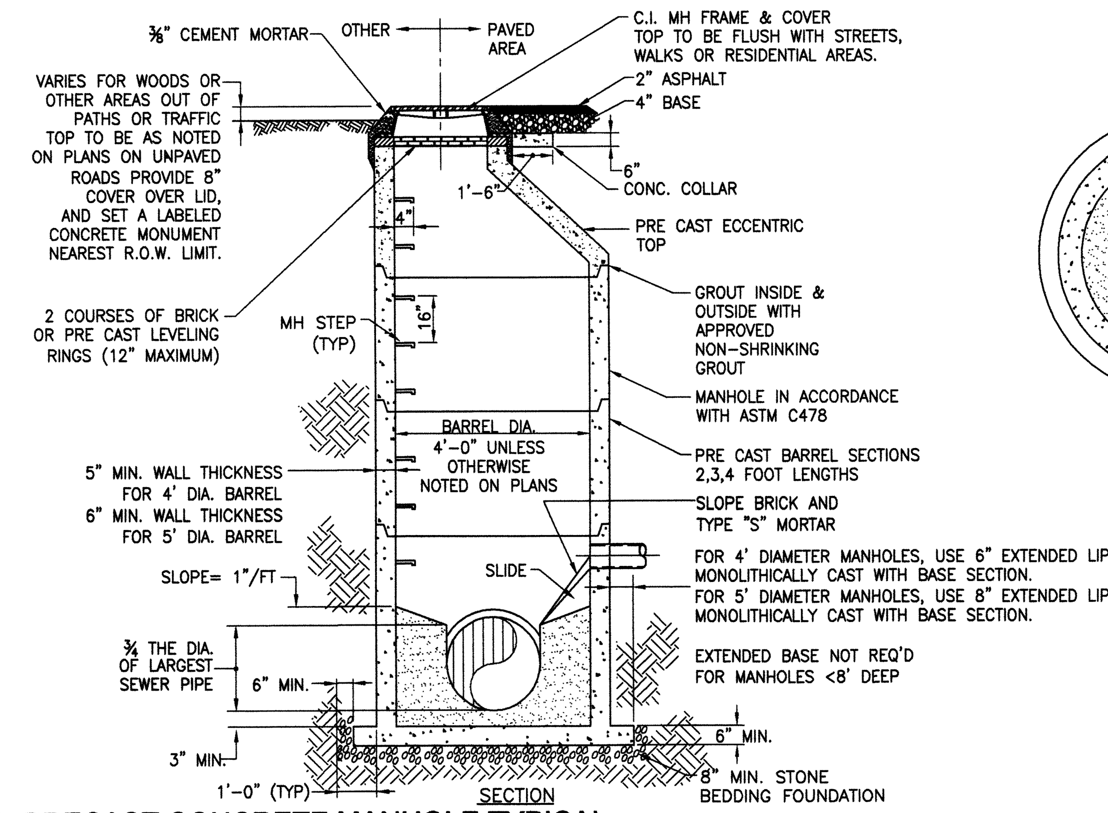

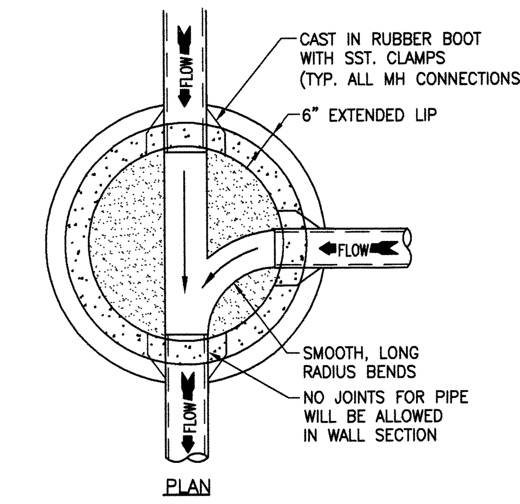

D3 / C5102 **PRECAST CONCRETE MANHOLE TYPICAL**
N.T.S.

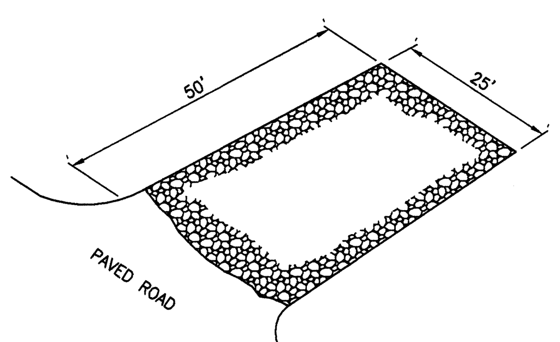

STONE PAD AT SITE EXITS TO REMOVE MUD FROM TIRES

NOTES:
1.) STONE SHALL BE 2-3 INCH WASHED STONE (6" THICK).
2.) THE ENTRANCE SHALL BE MAINTAINED TO PREVENT TRACKING OR FLOWING OF SEDIMENT ONTO PUBLIC RIGHTS-OF-WAY. THIS MAY REQUIRE PERIODIC TOP DRESSING WITH ADDITIONAL STONE AND REPAIR AND/OR CLEANOUT OF ANY MEASURES USED TO TRAP SEDIMENT.
3.) WHEN NECESSARY WHEELS SHALL BE CLEANED TO REMOVE SEDIMENT PRIOR TO ENTRANCE ONTO PUBLIC RIGHT-OF-WAY. WASHING SHALL BE DONE ON AN AREA STABILIZED WITH CRUSHED STONE WHICH DRAINS INTO AN APPROVED SEDIMENT CONTROLLING STRUCTURE. USE SAND BAGS, GRAVEL, BOARDS OR OTHER APPROVED METHODS TO PREVENT SEDIMENT FROM ENTERING ANY STORM DRAIN, DITCH, OR WATER-COURSE.
4.) ALL SEDIMENT SPILLED, DROPPED, WASHED OR TRACKED ONTO PUBLIC RIGHTS-OF-WAY MUST BE REMOVED IMMEDIATELY.

C5 / C5102 **TEMPORARY CONSTRUCTION ENTRANCE**
N.T.S.

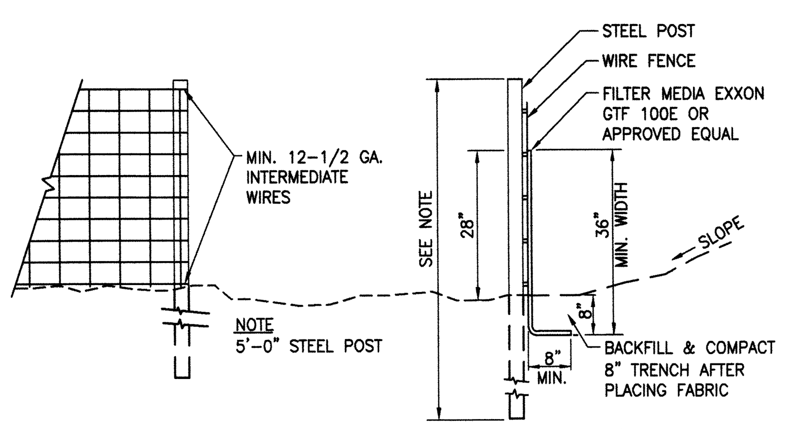

INDICATED ON PLAN AS:

NOTES:
1.) WIRE FENCE SHALL BE A MIN. OF 32" IN WIDTH AND SHALL HAVE A MIN. OF SIX LINE WIRES WITH 12" STAY SPACING. BOTTOM PORTION OF WIRE FENCE SHALL BE BURIED 6".
2.) FILTER FABRIC SHALL MEET OR EXCEED 150 LBS. GRAB TENSILE (ASTM-D-1682), 180 PSI. BURST (ASTM-D-2263) AND 70 ON COE E.O.S. TEST.
3.) STEEL POST SHALL BE 5'-0' IN HEIGHT AND BE OF THE SELF-FASTENER TYPE.
4.) STEEL POSTS FOR SILT FENCE SHALL BE NO WIDER THAN 8' APART O.C. WITH WIRE BACKING.
5.) CONTRACTOR TO FIELD LOCATE AS NECESSARY TO CONTROL SURFACE EROSION.

C4 / C5102 **TEMPORARY SILT FENCE**
N.T.S.

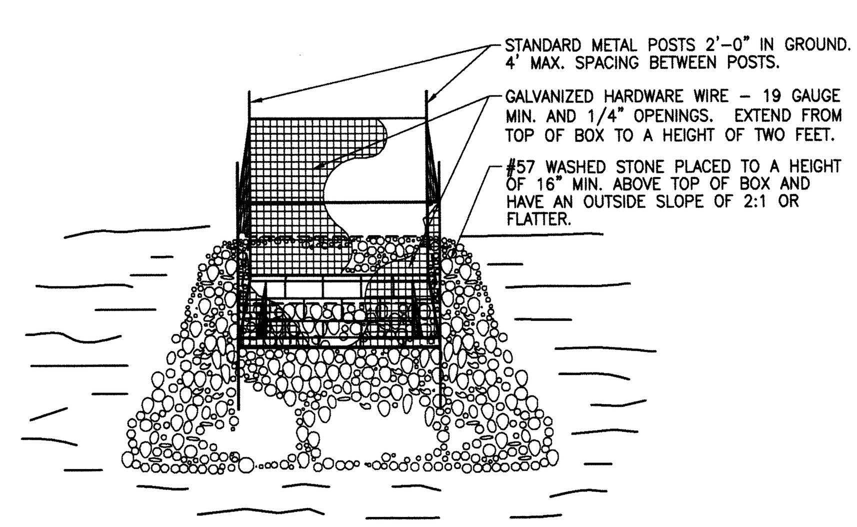

C3 / C5102 **INLET SEDIMENT CONTROL**
N.T.S.

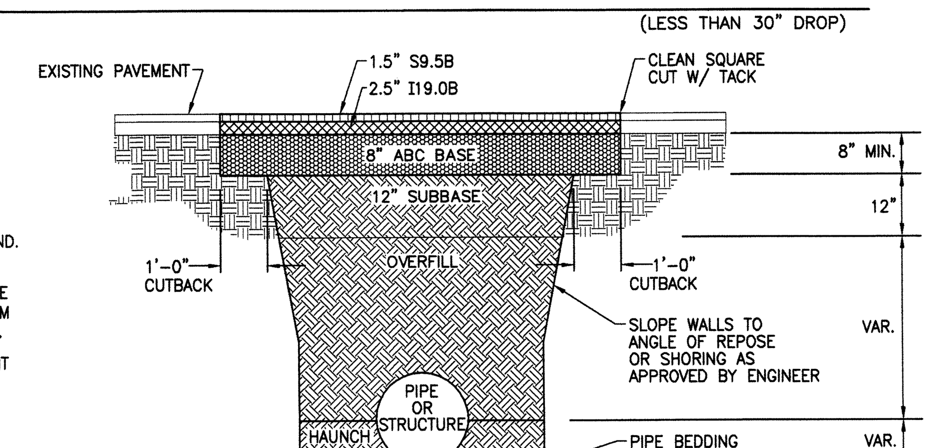

NOTES:
1. CONTRACTOR SHALL ENSURE BOTTOM OF TRENCH IS SUITABLE FOR INSTALLATION AND DOES NOT REQUIRED FOUNDATION CONDITIONING.
2. FILL SHALL BE SUITABLE MATERIAL THAT IS FREE FROM HEAVY CLAY, GUMBOS, DEBRIS, ORGANICS, AND LITTLE TO NO EXCESSIVE MOISTURE.
3. SELECT BACKFILL MAY BE SUBSTITUTED OR REQUIRED BY CITY TO ACHIEVE COMPACTION, (I.E. #57, ABC, CRUSHED LIMESTONE, CLEAN SAND, FLOWABLE FILL, ETC).
4. FILL AND BASE MATERIALS SHALL BE COMPACTED 12 MINIMUM LIFTS.
5. SOIL SHALL BE COMPACTED BY A MECHANIZED TAMPER (I.E. JUMPING JACK), HOWEVER, VIBRATORY ROLLERS > 18 WIDTH MAY BE USED FOR LARGER EXCAVATIONS. THE PLATE TAMP METHOD SHALL NOT BE USED.
6. ALL APPROVED CASTINGS SHALL BE SET FLUSH TO GRADE AND SUPPORTED IF APPLICABLE.
7. BEDDING, HAUNCH, ABC BASE AND SUBBASE COMPACTED TO 95% AND OVERFILL COMPACTED TO 90% AS DETERMINED BY THE MODIFIED PROCTOR AASHTO METHOD T-99.
8. 1-FOOT CUTBACKS OF ASPHALT SHALL BE PREPARED ON UNDISTURBED SOIL. MINIMUM ASPHALT DENSITY IS 90% OF MAXIMUM SPECIFIC GRAVITY.

C2 / C5102 **PAVEMENT REPAIRS - UTILITY CUTS**
N.T.S.

CONSTRUCTION SEQUENCE:
1. REQUEST PRE-CONSTRUCTION CONFERENCE WITH COUNTY EROSION INSPECTOR.
2. INSTALL GRAVEL CONSTRUCTION ENTRANCE AND PERIMETER SILT FENCE.
3. INSTALL STORM DRAIN LINES AND INLET PROTECTION IN THE SAME EFFORT TO PREVENT SEDIMENT FROM ENTERING PIPES.
4. COMMENCE GRADING OPERATIONS FOR PARKING AND CURB AND GUTTERS.
5. STABILIZE ALL DISTURBED AREAS AS SOON AS FINAL GRADES ARE ESTABLISHED.
6. REMOVE TEMPORARY CONTROL DEVISES (SILT FENCE, ETC.) ONCE PERMANENT VEGETATIVE COVER IS ESTABLISHED.

GRADING NOTES:
1. INITIATE CONSTRUCTION SEQUENCE BEFORE BEGINNING CLEARING AND GRADING OPERATIONS.
2. CLEAR AREAS TO BE GRADED OF ALL VEGETATION. PROTECT VEGETATION BEYOND GRADING LIMITS.
3. STRIP TOPSOIL TO FULL AREAS TO BE GRADED AND STOCKPILE OR REMOVE FROM SITE.
4. COMPACT ALL FILL AREAS TO 95% OF MAXIMUM DENSITY.
5. ALL BANKS AND SWALE SIDE SLOPES SHALL BE GRADED WITH NO STEEPER THAN 3:1 SLOPES.
6. PROPOSED SPOT ELEVATIONS ARE SHOWN AT FINISHED GRADE.
7. OPERATOR SHALL VERIFY EXISTING TOPOGRAPHY IN RELATION TO THE PROPOSED GRADES TO ENSURE DRAINAGE IN THE DIRECTIONS INDICATED ON THE PLAN.

EROSION CONTROL:
1. ANY GRADING BEYOND THE DENUDED LIMITS SHOWN ON THE PLAN IS A VIOLATION AND IS SUBJECT TO A FINE.
2. STABILIZATION IS THE BEST FORM OF EROSION CONTROL. TEMPORARY SEEDING IS NECESSARY TO ACHIEVE EROSION CONTROL ON LARGE DENUDED AREAS AND ESPECIALLY WHEN SPECIFICALLY REQUIRED AS PART OF THE CONSTRUCTION SEQUENCE SHOWN ON THE PLAN. ALL GRADING SLOPES MUST BE SEEDED AND MULCHED WITHIN 21 CALENDAR DAYS OF COMPLETION OF GRADING. ALL FLAT AREAS ARE TO BE SEEDED AND MULCHED WITHIN 21 WORKING DAYS.
3. ADDITIONAL DEVICES MAY BE REQUIRED AS AGREED UPON BY FIELD INSPECTOR, ENGINEER, AND OWNER.
4. IF ACTIVE CONSTRUCTION CEASES IN ANY SLOPED AREA FOR MORE THAN 21 CALENDAR DAYS OR 21 WORKING DAYS IN FLAT AREAS, ALL DISTURBED AREAS MUST BE SEEDED, MULCHED, AND TACKED, UNLESS WRITTEN APPROVAL IS GRANTED BY THE EROSION CONTROL INSPECTOR.
5. IF ACTIVE CONSTRUCTION CEASES FOR 21 CALENDAR DAYS DURING GRADING OPERATIONS AND WHILE TEMPORARY DIVERSION DITCHES ARE REQUIRED, ALL DISTURBED AREAS, INCLUDING THE DITCHES MUST BE SEEDED, MULCHED, & TACKED, UNLESS WRITTEN APPROVAL IS GRANTED BY THE EROSION CONTROL INSPECTOR.

MAINTENANCE PLAN:
1. ALL EROSION AND SEDIMENT CONTROL PRACTICES WILL BE CHECKED FOR STABILITY AND OPERATION FOLLOWING EVERY RUNOFF-PRODUCING RAINFALL BUT IN NO CASE LESS THAN ONCE EVERY WEEK. ANY NEEDED REPAIRS WILL BE MADE IMMEDIATELY TO MAINTAIN ALL PRACTICES AS DESIGNED.
2. SEDIMENT WILL BE REMOVED FROM BEHIND THE SEDIMENT FENCE AND INLET PROTECTION FENCE WHEN IT BECOMES ABOUT 0.5 FEET DEEP AT THE FENCE. THE SEDIMENT FENCE WILL BE REPAIRED AS NECESSARY TO MAINTAIN A BARRIER.
3. ALL SEEDED AREAS WILL BE FERTILIZED, RESEEDED AS NECESSARY, AND MULCHED ACCORDING TO SPECIFICATIONS IN THE VEGETATIVE PLAN TO MAINTAIN A VIGOROUS, DENSE VEGETATIVE COVER.
4. CONSTRUCTION ENTRANCE TO BE CLEANED WHEN SEDIMENT ACCUMULATIONS ARE VISIBLE OR SEDIMENT IS DEPOSITED ON THE ASPHALT AND STONE WILL BE PERIODICALLY TOP DRESSED WITH 2 INCHES OF #4 STONE TO MAINTAIN 6" DEPTH.

SITE NOTES:
1. THE CONTRACTOR SHALL VISIT THE SITE TO FAMILIARIZE THEMSELVES WITH FIELD CONSTRUCTION CONDITIONS.
2. BORROW MATERIAL: ALL BORROWED MATERIAL MUST COME FROM A LEGALLY OPERATED MINE OR OTHER SOURCE APPROVED BY THE STATE.
3. CLEARED, GRUBBED, STRIPPED, OR EXCAVATED SPOIL SHALL BE REMOVED FROM THE SITE OR USED IN LANDSCAPED ISLANDS.

SEEDING SPECIFICATIONS:
LIME: APPLY 100 POUNDS PER 1,000 SQUARE FEET
FERTILIZER: APPLY 20 POUNDS 8-8-8 PER 1,000 SQUARE FEET

SEED (NON-NCDOT RIGHT OF WAY):	PER ACRE
NOVEMBER-MARCH	
BERMUDA (UNHULLED)	20 LBS.
WINTER RYE (GRAIN)	50 LBS.
FESCUE	80 LBS.
MARCH-NOVEMBER	
BERMUDA (HULLED)	30 LBS.
FESCUE	80 LBS.

MULCH: APPLY 1-1/2 TONS/ACRE WHEAT STRAW (OR APPROVED EQUAL) ON ALL SEEDED AREAS.
TACK: ALL SLOPES WITH STRAW MULCH EXCEEDING 3:1 TO HAVE ASPHALT TACK APPLIED AT THE RATE OF 225 GALLONS/ACRE.

- * AFTER SOIL PREPARATION AND SEEDING, INSTALL JUTE MATTING. OR EQUAL ON ALL DISTURBED AREAS.
- * MAINTAIN SEEDED AREAS UNTIL MINIMUM GROWTH IS ESTABLISHED AND/OR FOR CONTRACT TIME.

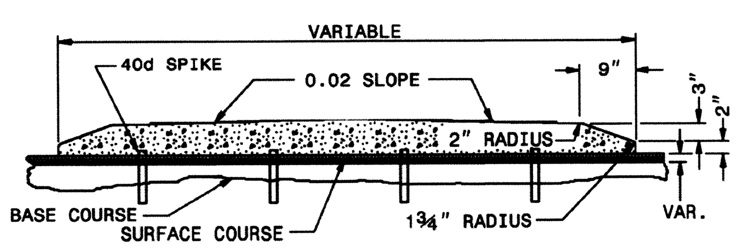

NOTES:
1.) WHEN MONOLITHIC CONCRETE ISLAND IS ON TOP OF SURFACE COURSE, DRIVE 40d SPIKES INTO SURFACE UNDER MONOLITHIC CONCRETE ISLAND. STAGGER SPIKES ON 2' CENTERS EACH WAY.
2.) PLACE 1/2" EXPANSION JOINTS AT 30' INTERVALS AND GROOVED JOINTS 1" DEEP AT 10' INTERVALS BETWEEN EXPANSION JOINTS.

B5 / C5102 **5" MONOLITHIC CONCRETE ISLAND (SURFACE MOUNTED) ON ASPALT CONCRETE PAVEMENT**
N.T.S.
[NC DOT STANDARD DETAIL 852.01]

STORMWATER MANAGEMENT PLAN
APPROVED
CITY OF WILMINGTON
ENGINEERING DEPARTMENT
DATE ________ PERMIT # ________
SIGNED ____________________

Approved Construction Plan		
	Name	Date
Planning		
Traffic		
Fire		

For each open utility cut of City streets, a $325 permit shall be required from the City prior to occupancy and/or project acceptance.

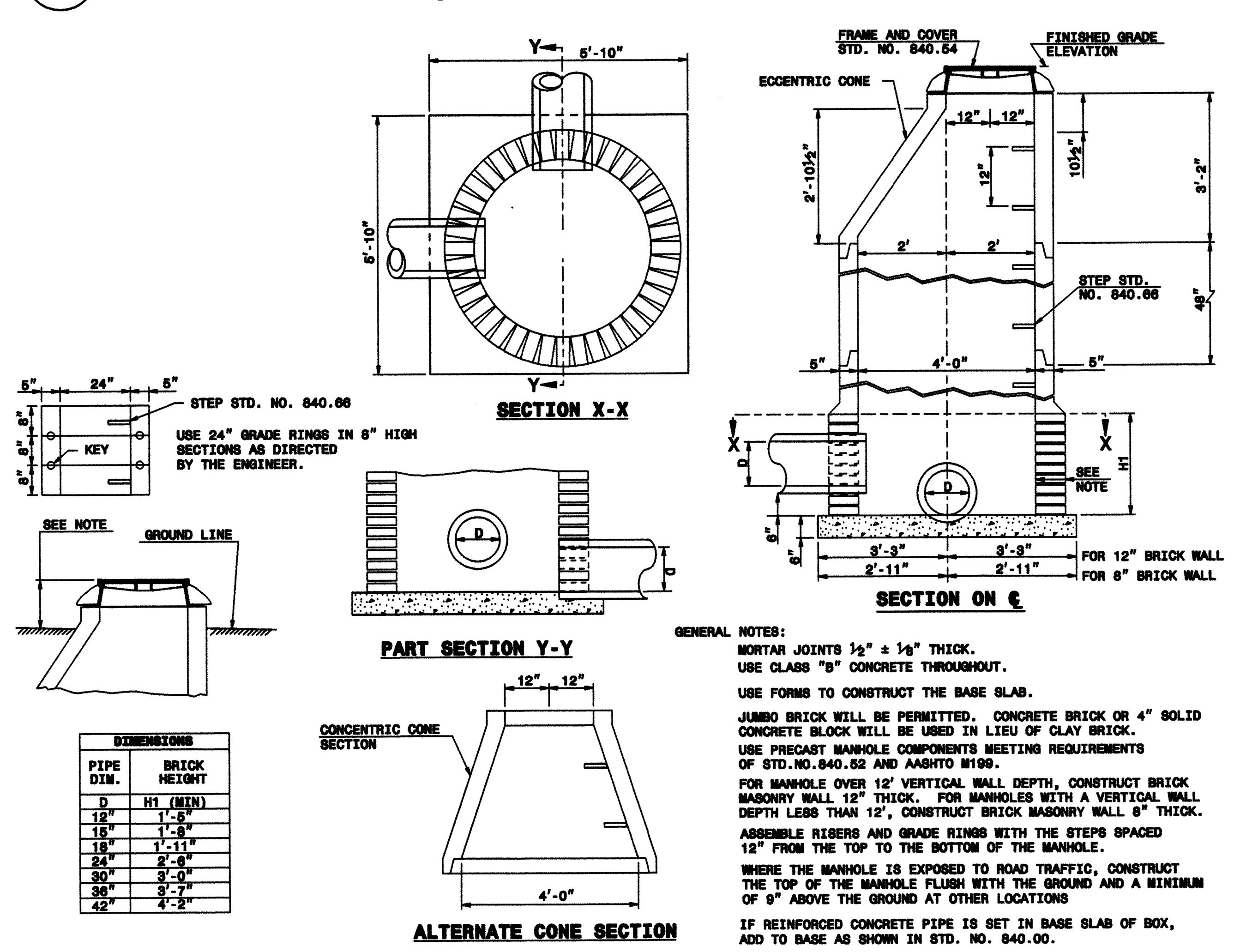

DIMENSIONS	
PIPE DIA.	BRICK HEIGHT
D	H1 (MIN)
12"	1'-9"
15"	1'-8"
18"	1'-11"
24"	2'-4"
30"	2'-9"
36"	3'-2"
42"	3'-8"

GENERAL NOTES:
MORTAR JOINTS 1/2" ± 1/8" THICK.
USE CLASS "B" CONCRETE THROUGHOUT.
USE FORMS TO CONSTRUCT THE BASE SLAB.
JUMBO BRICK WILL BE PERMITTED. CONCRETE BRICK OR 4" SOLID CONCRETE BLOCK WILL BE USED IN LIEU OF CLAY BRICK.
USE PRECAST MANHOLE COMPONENTS MEETING REQUIREMENTS OF STD.NO.840.52 AND AASHTO M199.
FOR MANHOLE OVER 12' VERTICAL WALL DEPTH, CONSTRUCT BRICK MASONRY WALL 12" THICK. FOR MANHOLES WITH A VERTICAL WALL DEPTH LESS THAN 12', CONSTRUCT BRICK MASONRY WALL 8" THICK.
ASSEMBLE RISERS AND GRADE RINGS WITH THE STEPS SPACED 12" FROM THE TOP TO THE BOTTOM OF THE MANHOLE.
WHERE THE MANHOLE IS EXPOSED TO ROAD TRAFFIC, CONSTRUCT THE TOP OF THE MANHOLE FLUSH WITH THE GROUND AND A MINIMUM OF 9" ABOVE THE GROUND AT OTHER LOCATIONS
IF REINFORCED CONCRETE PIPE IS SET IN BASE SLAB OF BOX, ADD TO BASE AS SHOWN IN STD. NO. 840.00.

A5 / C5102 **STORM DRAIN MANHOLE**
N.T.S.
PRECAST MANHOLE
[NC DOT STANDARD DETAIL 840.53]

SOLID COVER SHOWN PERFORATED. PERFORATED AVAILABLE IF SPECIFIED.
STATE USE OF SYSTEM ON COVER
(I.E.: SEWER, STORM DRAIN, ELECTRICAL)

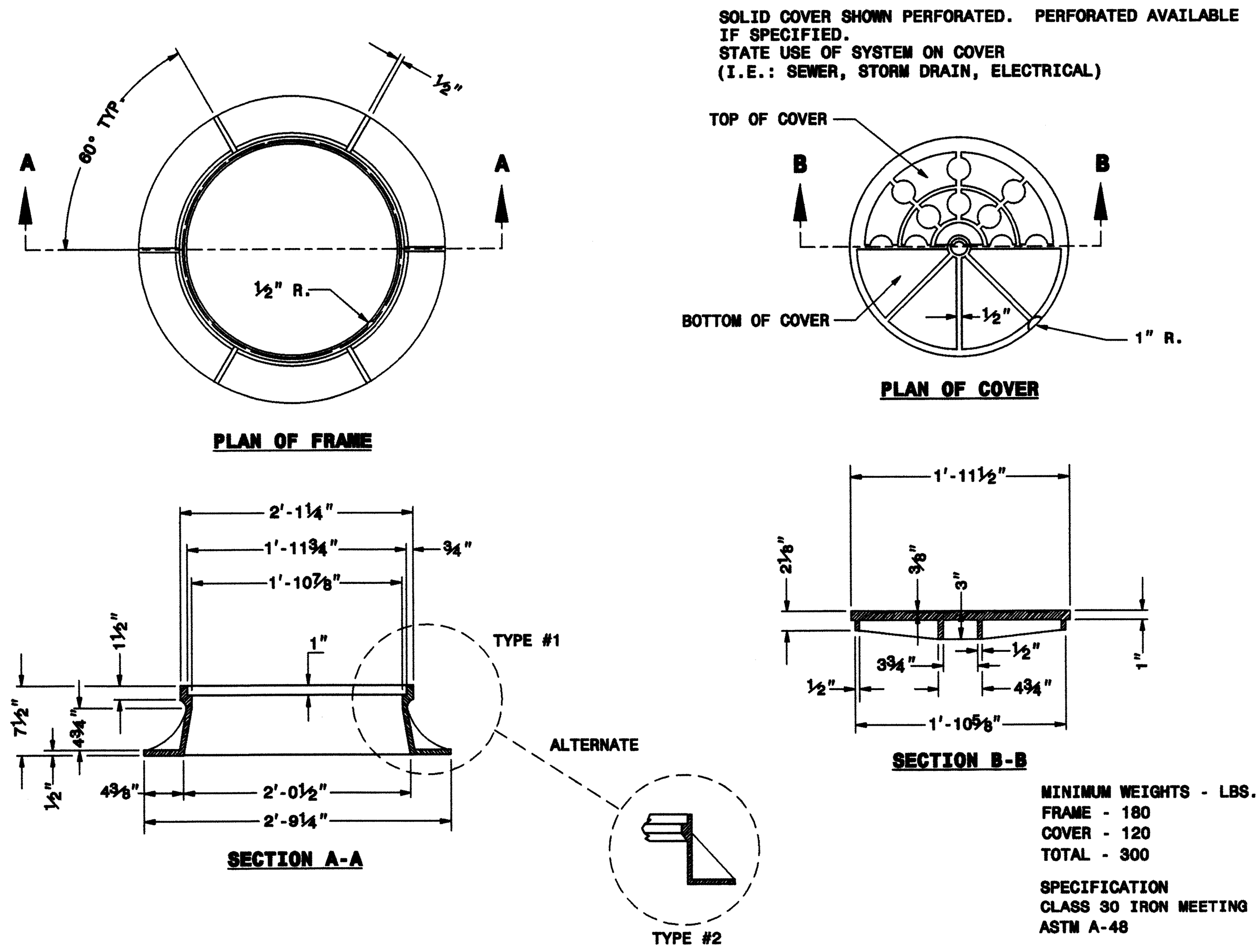

MINIMUM WEIGHTS - LBS.
FRAME - 180
COVER - 120
TOTAL - 300

SPECIFICATION
CLASS 30 IRON MEETING
ASTM A-48

MANHOLE FRAME AND COVER
[NC DOT STANDARD DETAIL 840.54]

NOTES:
INSTALL ALL STEPS PROTRUDING 4" FROM INSIDE FACE OF STRUCTURE WALL.
STEPS DIFFERING IN DIMENSIONS, CONFIGURATION, OR MATERIALS FROM THOSE SHOWN MAY ALSO BE USED PROVIDED THE CONTRACTOR HAS FURNISHED THE ENGINEER WITH DETAILS OF THE PROPOSED STEPS AND HAS RECEIVED WRITTEN APPROVAL FROM THE ENGINEER FOR THE USE OF SUCH STEPS.

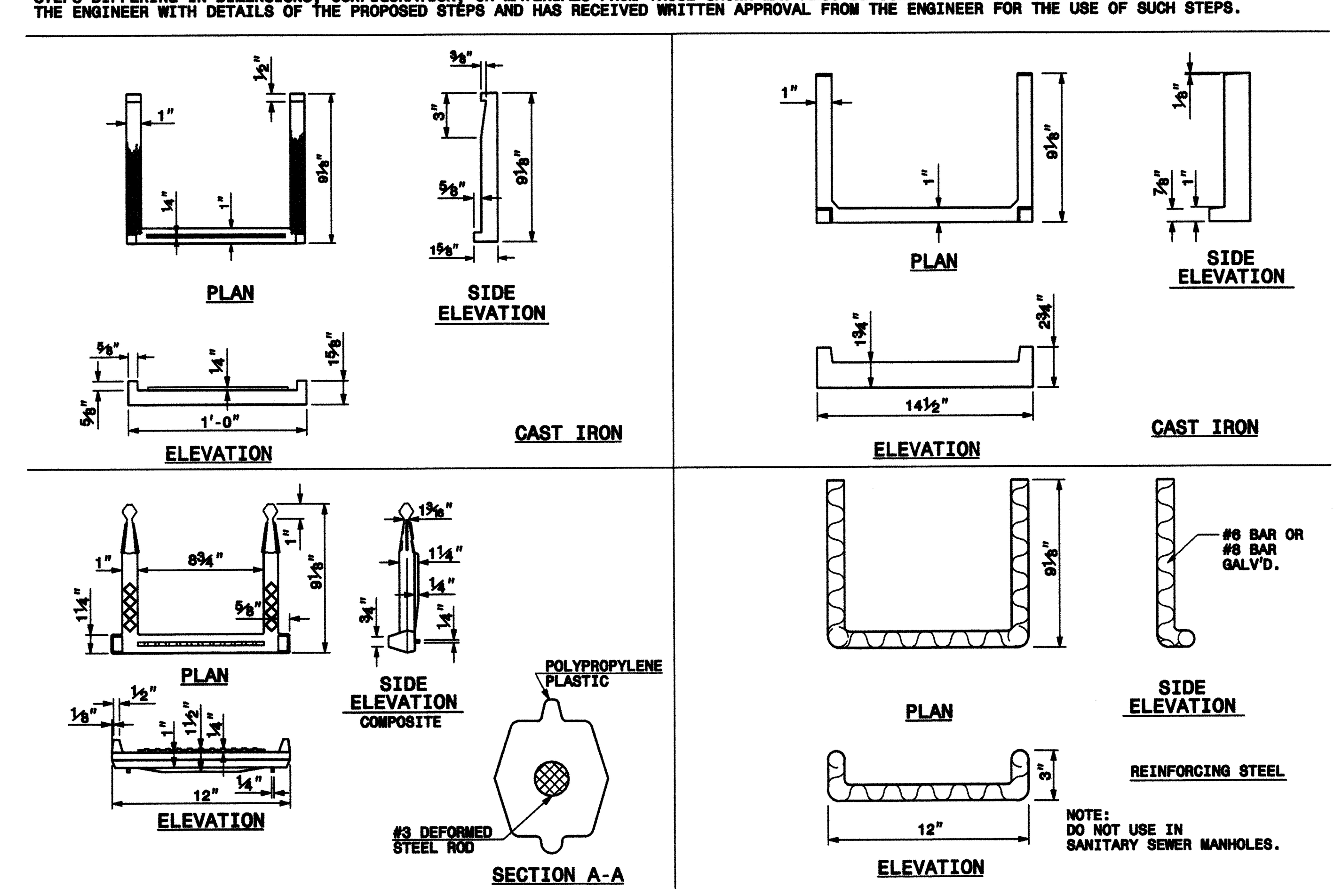

DRAINAGE STRUCTURE STEPS
[NC DOT STANDARD DETAIL 840.66]

OBrienAtkins
Architecture/Engineering/Landscape Architecture/Planning/Interior Design

CRISER TROUTMAN TANNER

State Employees' Credit Union
Wilmington Randall Parkway Office
5011 Randall Parkway
Wilmington, North Carolina

Feb 27, 2014

Issued	Date	By
DD	10/25/13	MTA
DD	10/31/13	MTA
CD	01/10/14	MTA
CD	01/15/14	MTA
CD	01/27/14	MTA
CD	02/27/14	MTA

Project No. 2013031
Checked By MTA
Drawn By HWL
Scale NOT TO SCALE
Drawing DETAILS
File Name C5102.dwg
Sheet C5102
OF SHEETS

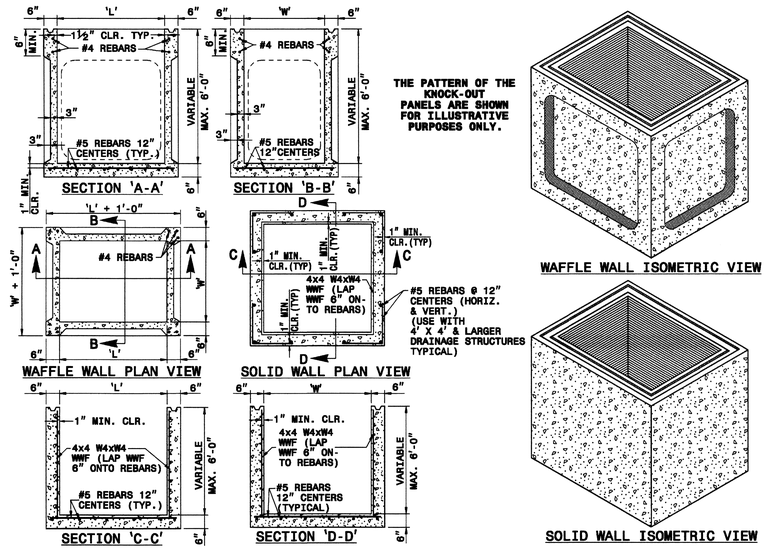

CATCH BASIN AND DROP INLET DETAILS

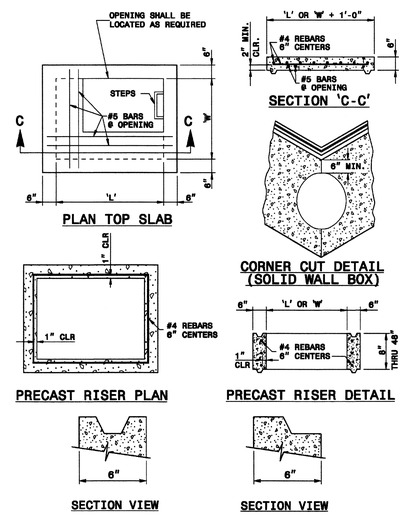

OPTIONAL JOINT DETAILS

GENERAL NOTES:

* THIS PRECAST BOX MAY BE USED FOR THE FOLLOWING STANDARDS: 840.01, 840.02, 840.04, 840.05, 840.11, 840.12, 840.14, 840.15, 840.17, 840.18, 840.19, 840.26, 840.27, 840.28, 840.31, 840.32 AND 840.41.
* USE 4000 PSI CONCRETE.
* PROVIDE ALL REINFORCING STEEL WHICH MEETS ASTM A615 FOR GRADE 60 AND WELDED WIRE FABRIC CONFORMING TO ASTM A185.
* LIMIT MAXIMUM DEPTH TO TOP OF BOTTOM SLAB FOR WAFFLE WALL STRUCTURE TO 10'-0"; LIMIT SOLID WALL STRUCTURE TO 15'-0".
* PLACE LIFT HOLES OR PINS IN ACCORDANCE WITH OSHA STANDARD 1926.704.
* CUT OR FORM OPENINGS FOR PIPE TO PROVIDE REQUIRED SIZE AND LOCATION. ORIENT WAFFLE WALL STRUCTURES SO THAT PIPES ENTER THROUGH THE KNOCKOUT/WAFFLE PANELS ONLY. PIPES MAY ENTER THROUGH THE CORNERS OF SOLID WALL BOXES IF A MINIMUM OF 6" OF WALL IS PROVIDED ABOVE THE HOLE.
* ALL ELEMENTS PRECAST TO MEET ASTM C913.
* FRAME AND GRATE HEIGHT MAY BE ADJUSTED WITH CONCRETE OR BRICK IN ACCORDANCE WITH STANDARD 840.25.
* PROVIDE PRECAST STRUCTURES OVER 4'-0" IN DEPTH WITH STEPS AS DIRECTED BY THE ENGINEER.
* WELDED WIRE FABRIC MAY BE SUBSTITUTED FOR REBAR AS LONG AS THE SAME AREA OF STEEL IS PROVIDED.
* SEAL JOINTS WITH A FLEXIBLE BUTYL RUBBER BASE CONFORMING TO FEDERAL SPECIFICATION SS-S-21A, AASHTO M-198, TYPE B - BUTYL RUBBER.
* LIMIT MAXIMUM STRUCTURE SIZE TO INSIDE CLEAR DIMENSIONS OF 5'-0" X 5'-0".
* THE OUTSIDE PIPE DIAMETER PLUS 2" OR THE OPENING REQUIRED FOR FRAME AND GRATE IS THE MINIMUM STRUCTURE SIZE WHICHEVER IS GREATER.
* USE FRAME AND COVER AS INDICATED ON THE PLANS. REINFORCE OPENING AS SHOWN ON THIS SHEET.

STRUCTURES:

1. PRECAST STRUCTURES SHALL MEET NCDOT 840.45 OR PRIOR APPROVED EQUIVALENT.
2. BRICK BUILT CATCH BASINS CAN ALTERNATIVELY BE USED, AND SHALL MEET NCDOT 840.01, OR PRIOR APPROVED EQUIVALENT.
3. CONCRETE CATCH BASINS CAN ALTERNATIVELY BE USED, AND SHALL MEET NCDOT 840.02, OR PRIOR APPROVED EQUIVALENT.
4. CONCRETE DROP INLETS CAN ALTERNATIVELY BE USED, AND SHALL MEET NCDOT 840.14, OR PRIOR APPROVED EQUIVALENT.
5. BRICK BUILT DROP INLETS CAN ALTERNATIVELY BE USED, AND SHALL MEET NCDOT 840.15, OR PRIOR APPROVED EQUIVALENT.

CASTINGS:

1. CATCH BASIN CASTINGS SHALL BE NCDOT 840.03, OR PRIOR APPROVED EQUIVALENT.
2. DROP INLET CASTINGS SHALL BE NCDOT 840.16, OR PRIOR APPROVED EQUIVALENT.
3. STORM DRAIN MANHOLE CASTINGS SHALL BE NCDOT 840.54, OR PRIOR APPROVED EQUIVALENT.

OTHER:

1. ORIENTATION OF STORM DRAIN INLETS ON PLAN ARE FOR THE GRATE AND/OR CASTINGS. MINIMUM STRUCTURE SIZE IS 2' X 2' PLAN DIMENSION. CONTRACTOR SHALL PROVIDE BOXES LARGER THAN MINIMUM SIZE, ORIENT THE BOX/STRUCTURE, AND/OR PROVIDE TRANSITION TOPS AS NECESSARY TO ACCEPT THE PIPE SIZES AND TO ACHIEVE THE PIPE ALIGNMENTS AS SHOWN ON THE PLAN. PIPES SHALL NOT CONNECT AT BOX CORNERS WITHOUT PRIOR APPROVAL FROM THE ENGINEER. SUMPS SHALL BE ZERO INCHES UNLESS OTHERWISE SHOWN. THERE SHALL BE NO MAN STEPS UNLESS OTHERWISE SHOWN.

C5 / C5103 PRECAST DRAINAGE STRUCTURES (SOLID AND WAFFLE WALL)

N.T.S. [NC DOT STANDARD DETAIL 840.45]

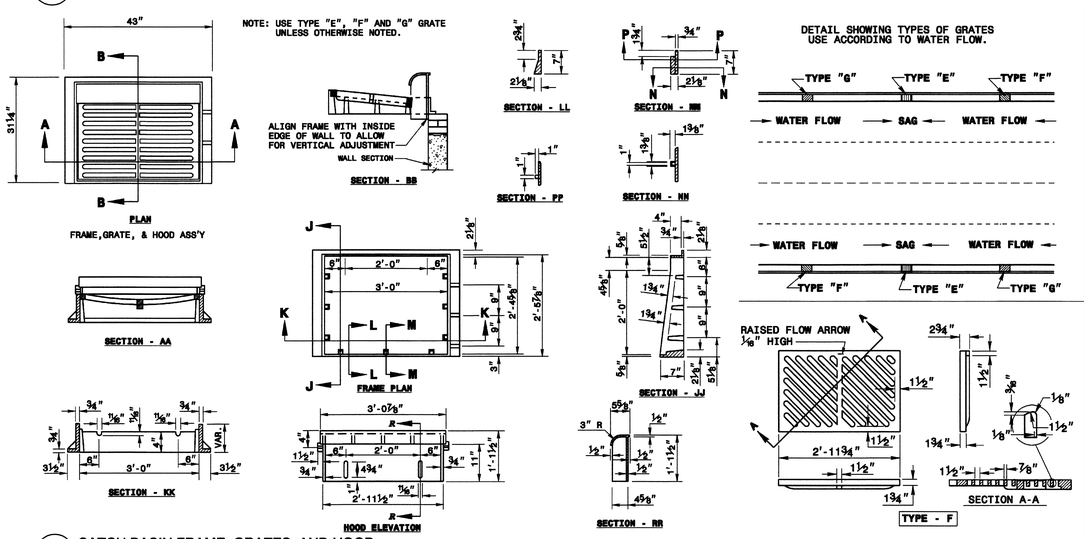

B5 / C5103 CATCH BASIN FRAME, GRATES, AND HOOD

N.T.S. [NC DOT STANDARD DETAIL 840.03]

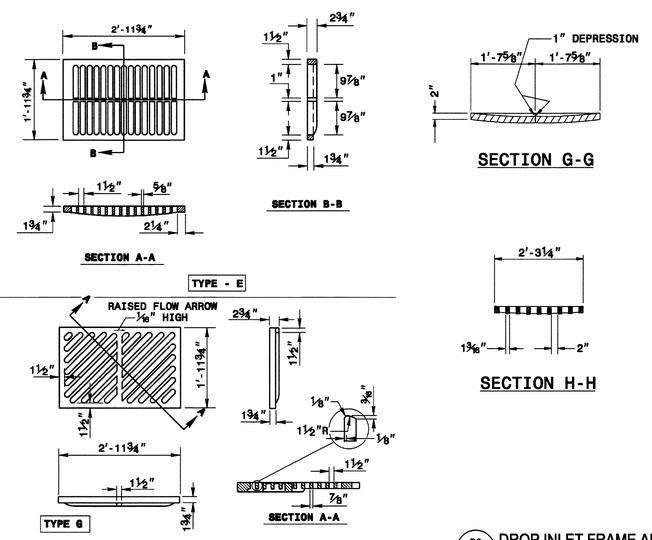

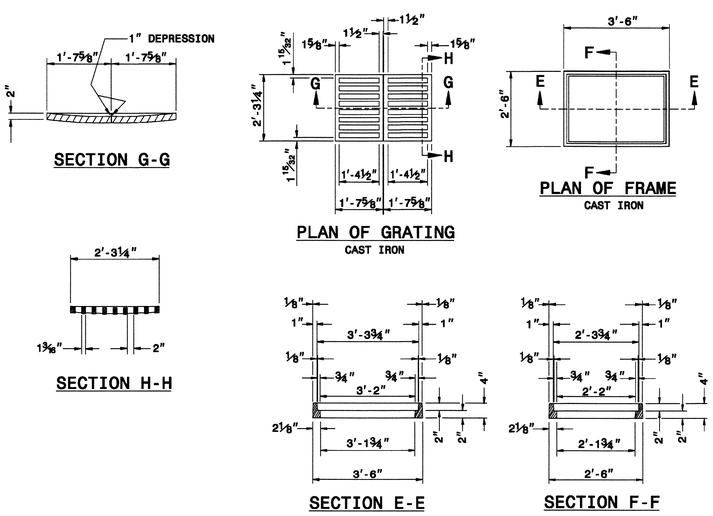

B2 / C5103 DROP INLET FRAME AND GRATES

N.T.S. [NC DOT STANDARD DETAIL 840.16 – 1 OF 1] (12" THRU 30" PIPE)

STORMWATER MANAGEMENT PLAN
APPROVED
CITY OF WILMINGTON
ENGINEERING DEPARTMENT
DATE _____ PERMIT # _____
SIGNED_____

For each open utility cut of City streets, a $325 permit shall be required from the City prior to occupancy and/or project acceptance.

Approved Construction Plan
Name Date
Planning_____
Traffic_____
Fire_____

OBrienAtkins
Architecture/Engineering/Landscape Architecture/Planning/Interior Design
919.941.5000 Durham
919.941.5002 Raleigh
919.941.5005 Fax
www.obrienatkins.com
OBrien/Atkins Associates PA
5540-F Page Road
Research Triangle Park
North Carolina 27709
CRISER TROUTMAN TANNER CONSULTING ENGINEERS
3809 Pendrive Ave., Suite 100
Wilmington, NC 28403
910.397.7929 Ph.
910.397.7939 Fax
www.crisertroutmantanner.com
NC FIRM LICENSE No. 79313
CRISER TROUTMAN TANNER
CTT JOB #7075

State Employees' Credit Union
Wilmington Randall Parkway Office
5011 Randall Parkway
Wilmington, North Carolina

Issued	Date	By
DD	10/25/13	MTA
DD	10/31/13	MTA
CD	01/10/14	MTA
CD	01/15/14	MTA
CD	01/27/14	MTA
CD	02/27/14	MTA

Project No. 2013031
Checked By MTA
Drawn By HWL
Scale NOT TO SCALE
Drawing DETAILS
File Name C5103.dwg
Sheet C5103 OF SHEETS

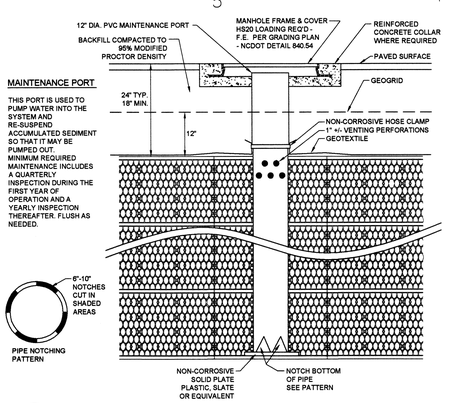

MAINTENANCE PORT

THIS PORT IS USED TO PUMP WATER INTO THE SYSTEM AND RE-SUSPEND ACCUMULATED SEDIMENT SO THAT IT MAY BE PUMPED OUT. MINIMUM REQUIRED MAINTENANCE INCLUDES A QUARTERLY INSPECTION DURING THE FIRST YEAR OF OPERATION AND A YEARLY INSPECTION THEREAFTER. FLUSH AS NEEDED.

MANHOLE RING & COVER HS20 LOADING REQ'D – 44.9 F.E. – NCDOT DETAIL 840.54

D5/C5104 INFILTRATION GALLERY MAINTENANCE PORT
N.T.S.

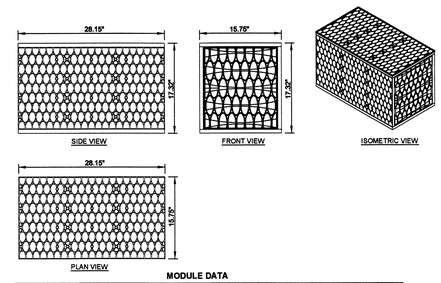

MODULE DATA

GEOMETRY:	LENGTH = 28.15 IN. (715 MM) WIDTH = 15.75 IN. (400 MM) HEIGHT = 17.32 IN. (440 MM) STORAGE VOLUME = 4.22 CF (119 L) VOID INTERNAL VOLUME: 95% VOID SURFACE AREA: 90%	**LOAD RATING:**	40 PSI, (MODULE ONLY) HS25, (WITH ACF COVER SYSTEM)
		MATERIAL:	85% RECYCLED POLYPROPYLENE

NOTE:
INFILTRATION GALLERY SHALL BE R-TANK HD SINGLE MODULE OR PRIOR APPROVED EQUIVALENT.

INFILTRATION GALLERY – SINGLE MODULE

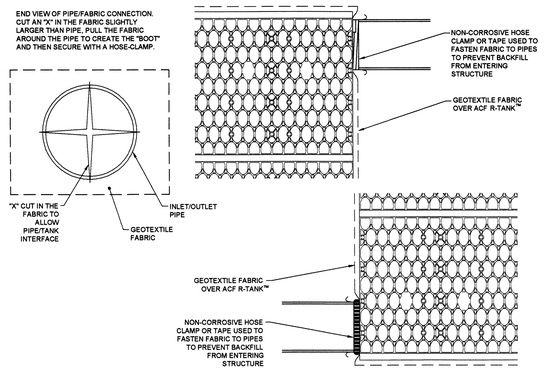

INFILTRATION GALLERY INLET/OUTLET DETAIL

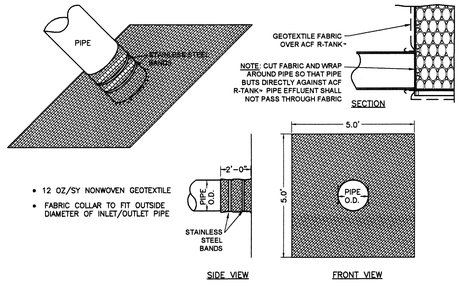

D2/C5104 INFILTRATION GALLERY FABRIC PIPE BOOT
N.T.S.

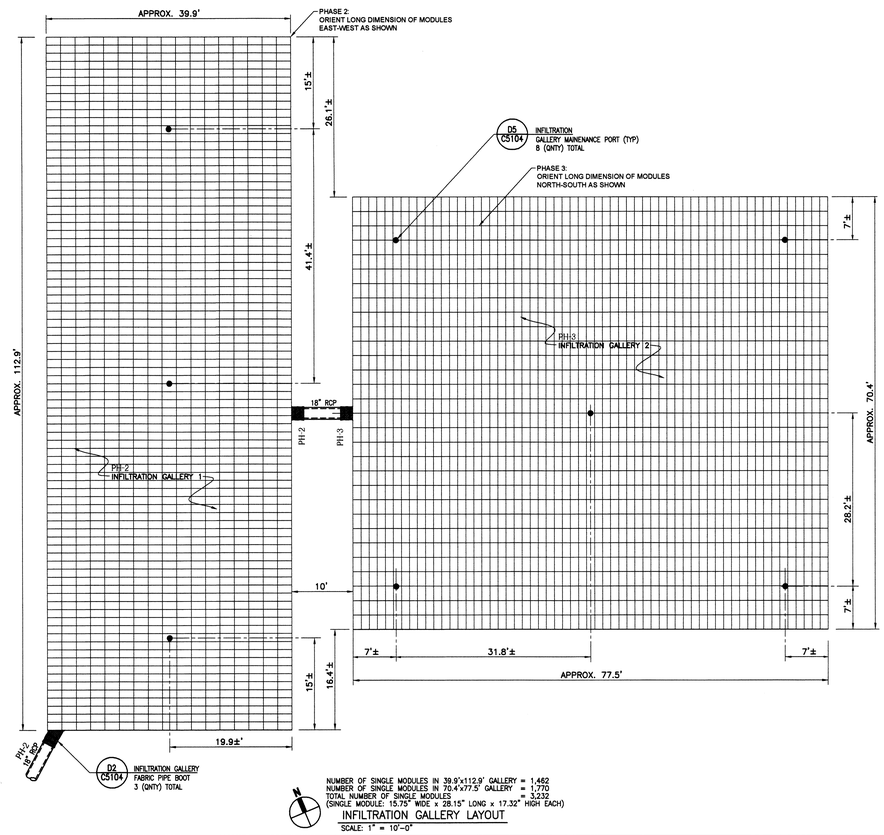

NUMBER OF SINGLE MODULES IN 39.9'x112.9' GALLERY = 1,462
NUMBER OF SINGLE MODULES IN 70.4'x77.5' GALLERY = 1,770
TOTAL NUMBER OF SINGLE MODULES = 3,232
(SINGLE MODULE: 15.75" WIDE x 28.15" LONG x 17.32" HIGH EACH)

INFILTRATION GALLERY LAYOUT
SCALE: 1" = 10'-0"

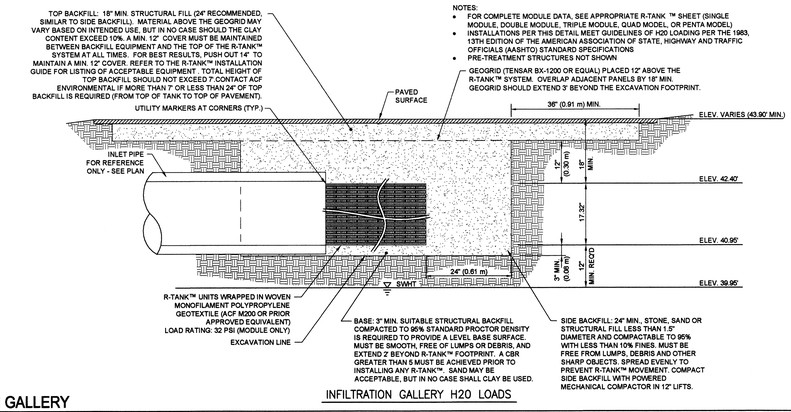

NOTES:
- FOR COMPLETE MODULE DATA, SEE APPROPRIATE R-TANK ™ SHEET (SINGLE MODULE, DOUBLE MODULE, TRIPLE MODULE, QUAD MODEL, OR PENTA MODEL)
- INSTALLATIONS PER THIS DETAIL MEET GUIDELINES OF H20 LOADING PER THE 1983, 13TH EDITION OF THE AMERICAN ASSOCIATION OF STATE, HIGHWAY AND TRAFFIC OFFICIALS (AASHTO) STANDARD SPECIFICATIONS
- PRE-TREATMENT STRUCTURES NOT SHOWN
- GEOGRID (TENSAR BX-1200 OR EQUAL) PLACED 12" ABOVE THE R-TANK™ SYSTEM. OVERLAP ADJACENT PANELS BY 18" MIN. GEOGRID SHOULD EXTEND 3' BEYOND THE EXCAVATION FOOTPRINT.

INFILTRATION GALLERY H20 LOADS

B5/C5104 INFILTRATION GALLERY
N.T.S.

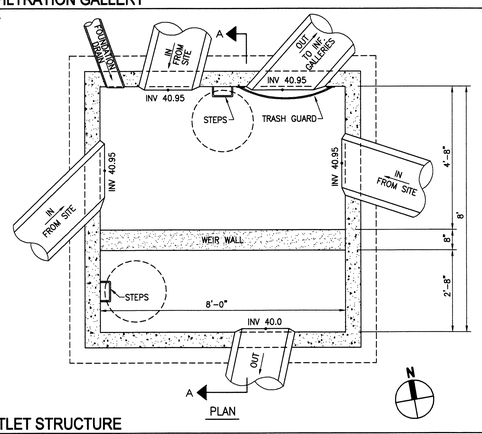

PLAN

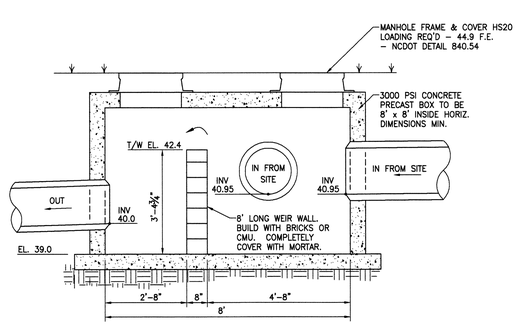

SECTION A – A

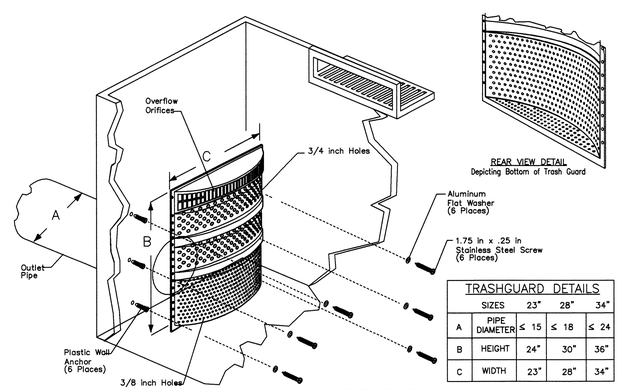

TRASH GUARD IN OUTLET STRUCTURE

TRASHGUARD DETAILS

	SIZES	23"	28"	34"
A	PIPE DIAMETER	≤ 15	≤ 18	≤ 24
B	HEIGHT	24"	30"	36"
C	WIDTH	23"	28"	34"

A5/C5104 OUTLET STRUCTURE
N.T.S.

STORMWATER MANAGEMENT PLAN
APPROVED
CITY OF WILMINGTON
ENGINEERING DEPARTMENT
DATE _____ PERMIT # _____
SIGNED_____

For each open utility cut of City streets, a $325 permit shall be required from the City prior to occupancy and/or project acceptance.

Approved Construction Plan
Name Date
Planning_____
Traffic_____
Fire_____

OBrienAtkins
Architecture/Engineering/Landscape Architecture/Planning/Interior Design
919.845.9500 Durham
919.755.1022 Raleigh
919.941.9005 Fax
www.obrienatkins.com
OBriensAtkins Associates, PA
P.O. Box 12077
Research Triangle Park,
North Carolina 27709

CERT. NO. 171

SEAL 024802 NORTH CAROLINA PROFESSIONAL ENGINEER MARK T. ARCURI

Feb 27, 2014

CRISER TROUTMAN TANNER
3809 Peachtree Ave., Suite 100
Wilmington, NC 28403
910.397.7929 Ph.
910.397.7930 Fax
www.criserttanner.com
NC FIRM LICENSE No. 10813
CRISER TROUTMAN TANNER
CTT JOB #7075

State Employees' Credit Union
Wilmington Randall Parkway Office
5011 Randall Parkway
Wilmington, North Carolina

Issued	Date	By
DD	10/25/13	MTA
DD	10/31/13	MTA
CD	01/10/14	MTA
CD	01/15/14	MTA
CD	01/27/14	MTA
CD	02/27/14	MTA

Project No. 2013031
Checked By MTA
Drawn By HWL
Scale NOT TO SCALE
Drawing DETAILS
File Name C5104.dwg
Sheet C5104
OF SHEETS

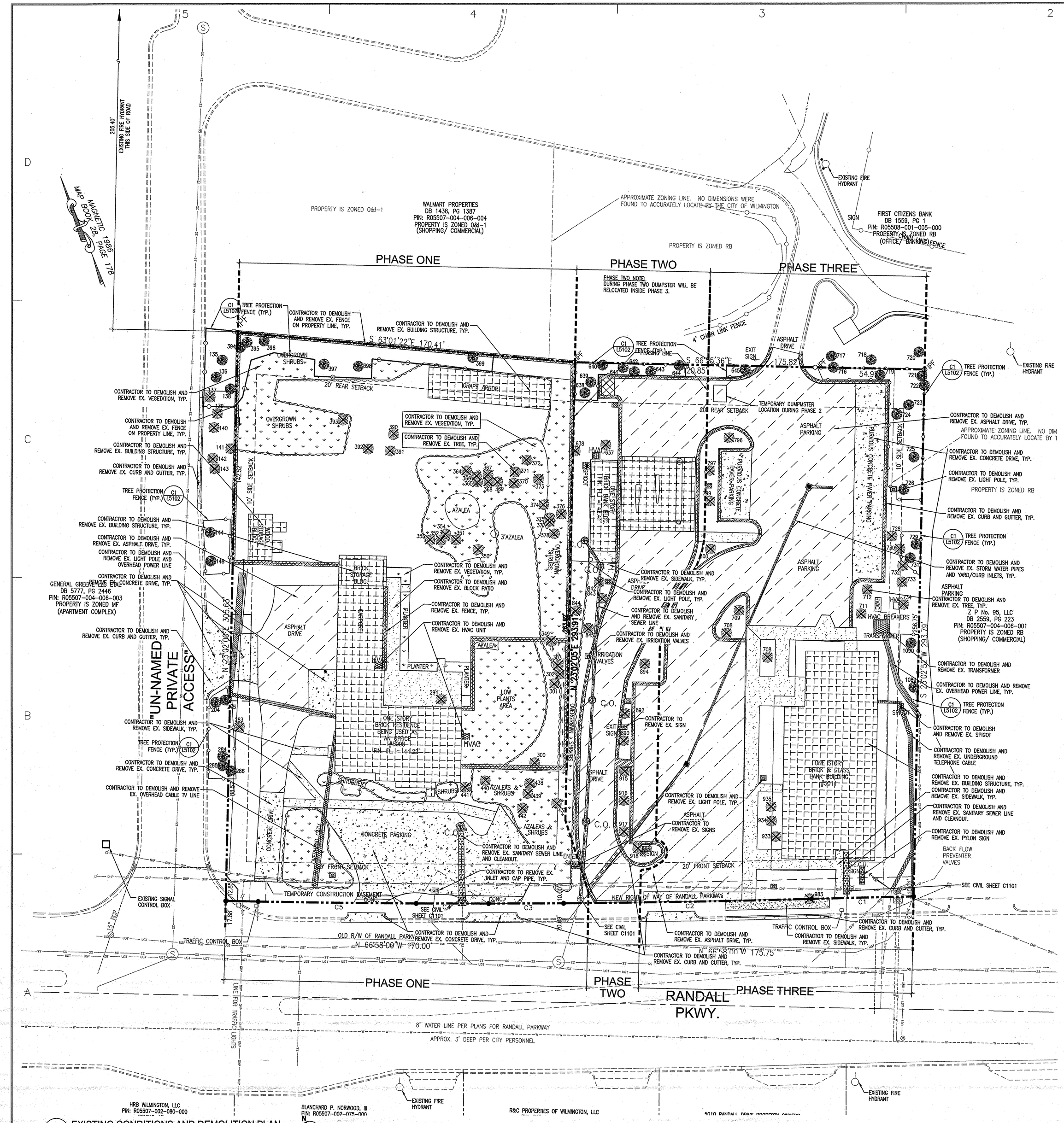

A5 L0101 EXISTING CONDITIONS AND DEMOLITION PLAN 1"=20'-0"

SURVEY REFERENCE:
DEED BOOK 1069, PAGE 716
DEED BOOK 1704, PAGE 1250
DEED BOOK 5654, PAGE 1250
DEED BOOK 5555, PAGE 1250
MAP BOOK 28, PAGE 178
MAP BOOK 55, PAGE 236

IPF	IRON PIN FOUND
WV	WATER VALVE
	WATER METER
	FIRE HYDRANT
S	SEWER MANHOLE
C.O.	SEWER CLEANOUT
CB	CATCH BASIN
	UTILITY POLE
	LIGHT POLE
	TREE REMOVAL
	GUY WIRE
	TRANSFORMER PAD
BM	BOOK OF MAPS
DB	DEED BOOK
PG	PAGE NUMBER
PIN	PARCEL NUMBER
RCP	REINFORCED CONC. PIPE
W	WATERLINE
	STORM DRAINLINE
SS	SEWERLINE
OHU	OVERHEAD UTILITY LINE

SURVEYOR

ROBERT H. GOSLEE & ASSOCIATES, PA
LAND SURVEYORS – LAND PLANNERS
FIRM LICENSE NUMBER: C-1167
513 CHESTNUT STREET
WILMINGTON, NORTH CAROLINA 28401
910-763-1941
rhgilm@bellsouth.net
FILE No.: 5507040602-2

NOTES

1. *FEMA FLOOD MAP INFORMATION:*
   PANEL: 37203137000J
   FLOOD ZONE: "X"
   MAP PANEL DATE: APRIL 3, 2006
2. *CORNERS ARE MARKED AS NOTED ON MAP.*
3. *ALL BEARINGS ARE MAGNETIC – 1986*
4. *ALL DISTANCES ARE HORIZONTAL FIELD MEASUREMENTS.*
5. *AREA COMPUTED BY THE COORDINATE METHOD.*
6. *PROPERTY IS ZONED O&I-1 EXCEPT FOR A SLIVER ON THE EAST SIDE WHICH IS ZONED RB.*
7. *ELEVATIONS ARE BASED ON NAVD 88 DATA.*

DEMOLITION LEGEND

- EXISTING TREE TO BE REMOVED
- EXISTING BUIDLING STRUCTURE TO BE REMOVED
- EXISTING ASPHALT DRIVE TO BE REMOVED
- EXISTING CONCRETE DRIVE TO BE REMOVED
- EXISTING CONCRETE SIDEWALK TO BE REMOVED
- EXISTING CURB AND GUTTER TO BE REMOVED
- EXISTING LIGHT POLE, OVERHEAD POWER LINE OR POWER POLE TO BE REMOVED
- EXISTING STORM PIPE TO BE REMOVED
- EXISTING SANITARY SEWER PIPE TO BE REMOVED
- EXISTING SIGN TO BE REMOVED
- EXISTING FENCE TO BE REMOVED
- EXISTING VEGETATION TO BE REMOVED
- EXISTING MISC. UTILITY TO BE REMOVED

DEMOLITION NOTES:

1. ALL TREE PROTECTION FENCE, CONSTRUCTION ENTRANCE AND SILT FENCE MUST BE INSTALLED PRIOR TO APPLYING FOR DEMOLITION PERMIT, SEE LAYOUT AND GRADING PLAN– L1101 FOR EXTENTS OF NEW WORK
2. CONTRACTOR TO SECURE DEMOLITION PERMIT PRIOR TO BEGINNING WORK
3. CONTRACTOR TO VERIFY EXISTING SUBSURFACE UTILITIES WITHIN SITE PRIOR TO REMOVING PAVING AND STRUCTURES
4. CONTRACTOR TO DISPOSE OF ALL DEBRIS IN COUNTY APPROVED SITES PER LOCAL MUNICIPAL AND COUNTY GUIDELINES

VICINITY MAP (NTS)

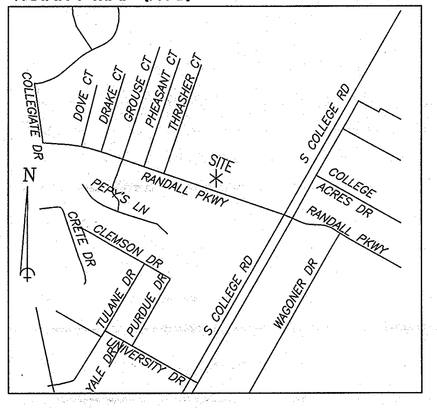

TREE TABLE

Point	Description
135	3–10" MAPLE CLUSTER
136	7" MAPLE
137	15" OAK
138	3–15" MAPLE CLUSTER
139	3–15" MAPLE CLUSTER
140	8" BOXWOOD
141	2–7" MAPLE CLUSTER
142	8" MAPLE
143	8" MAPLE
144	2–7" MAPLE CLUSTER
148	3–8" MAPLE CLUSTER
204	13" OAK
273	8" BLACK GUM
283	7" HOLLY
284	8" CHERRY & 10" OAK
285	22" MAPLE
286	9" CHERRY
294	9" DOGWOOD
300	8" OAK
301	15" OAK
302	18" OAK
303	12" OAK
349	9" OAK
350	5" MAGNOLIA
351	5" DOGWOOD
352	5" DOGWOOD
353	8" PEAR
354	5" DOGWOOD
364	8" DOGWOOD
365	22" OAK
366	6" DOGWOOD
367	24" MAPLE
368	9" BLACK GUM
369	14" MAPLE
370	16" OAK
371	12" BLACK GUM
372	17" PINE
373	18" PINE
374	24" PINE
375	11" OAK
376	16" PINE
377	10" BLACK GUM
378	15" PINE
390	6–6'M
391	PRIVET SHRUB – 5' DIAMETER
392	PRIVET SHRUB – 5' DIAMETER
393	2–8" BLACK GUMS
394	12" PINE
395	15" SWEET GUM
396	14" MAPLE
397	7" OAK
398	7" OAK
399	2–12" SWEET GUMS
437	16" PINE
438	2–7" DOGWOODS
439	17" PINE
440	2–8" DOGWOODS
441	7" DOGWOODS
442	23" PINE
636	6" MAPLE
637	20" OAK
638	10" OAK
639	6" MAPLE
640	9" CHERRY
641	12" MAPLE
642	12" MAPLE
643	2" CAMELLIA BUSH
644	9" OAK
645	10" CHERRY
708	2" CAMELLIA BUSH
709	2" CAMELLIA BUSH
710	2" CAMELLIA BUSH
711	5" MAGNOLIA
712	2" CAMELLIA BUSH
716	23" OAK
717	7" JUNIPER
718	7" JUNIPER
719	10" BRADFORD PEAR
720	22" PINE
721	8" BRADFORD PEAR
722	8" CHERRY
723	21" OAK
724	6" BRADFORD PEAR
725	14" OAK
726	30" OAK
728	6" OAK
729	16" PINE
730	6" BRADFORD PEAR
731	18" PINE
732	2–14" MAPLES
733	16" OAK
734	17" PINE
796	2" CAMELLIA BUSH
797	2" CAMELLIA BUSH
799	2" CAMELLIA BUSH
800	2–7" MAPLES
842	2" CAMELLIA BUSH
843	2" CAMELLIA BUSH
844	15" PINE
845	6" MAPLE
890	2" CAMELLIA BUSH
892	2" CAMELLIA BUSH
894	6" MAPLE
915	2" CAMELLIA BUSH
916	2" CAMELLIA BUSH
917	2" CAMELLIA BUSH
918	6" MAPLE
933	5" YEW
934	5" YEW
935	5" YEW
983	6" MAPLE
1089	12" OAK
1090	15" PINE

TREE PROTECTION NOTE

PRIOR TO ANY CLEARING, GRADING, OR CONSTRUCTION ACTIVITY, TREE PROTECTION FENCING WILL BE INSTALLED AROUND PROTECTED TREES OR GROVES OF TREES. NO CONSTRUCTION WORKERS, TOOLS, MATERIALS OR VEHICLES ARE PERMITTED WITHIN THE TREE PROTECTION FENCING.

LINE TABLE

Course	Bearing	Distance
L1	N 67°02'32" W	16.35'

CURVE TABLE

Curve	Radius	Chord	Chord Bear.
C1	6046.52'	51.25'	N 69°28'42" W
C2	5952.94'	124.63'	N 69°07'17" W
C3	5952.95'	37.71'	N 68°20'24" W
C4	6003.36'	36.48'	N 67°58'59" W
C5	6003.36'	79.48'	N 67°25'36" W

North Carolina One-Call Center, Inc.
1-800-632-4949

OBrienAtkins
Architecture/Engineering/Landscape Architecture/Planning/Interior Design
OBrien/Atkins Associates, PA
P.O. Box 12077
Research Triangle Park
North Carolina 27709
919.941.5000 - Durham
919.821.1200 - Raleigh
919.941.5005 - Fax
www.obrienatkins.com

OBRIEN & ATKINS ARCHITECTURAL, P.A. REGISTERED NORTH CAROLINA ARCHITECTURAL CORPORATION CERT. NO. 171 NORTH CAROLINA DURHAM

NORTH CAROLINA PROFESSIONAL SEAL 1485 ENGINEER ROBERT H. GOSLEE 4/23/14

State Employees' Credit Union

Randall Parkway Office
5011 Randall Parkway
Wilmington, North Carolina

Issued	Date	By
CD	4/23/14	DRK

Project No. 2013031
Checked By DRK
Drawn By YM/ FD
Scale 1"=20'
Drawing EXISTING CONDITIONS AND DEMO PLAN
File Name L0101–RPKWY.dwg
Sheet L0101
1 of 6 SHEETS

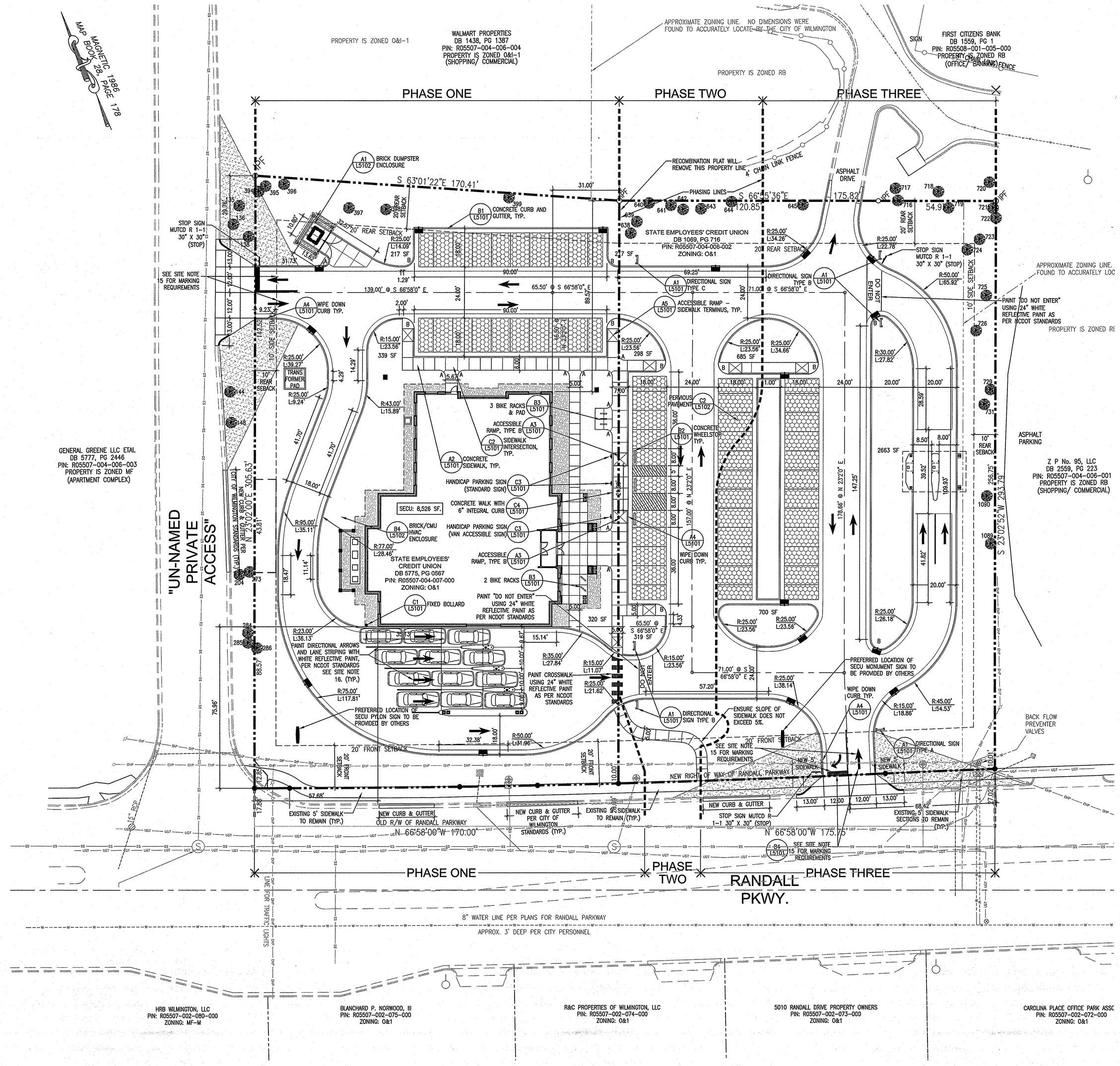

A5 L1101 LAYOUT PLAN
1"=20'-0"

SITE DATA TABLE

1. PIN NUMBER OR TAX PARCEL NUMBER: R05507-004-007-000 & R05507-004-006-002
2. DB: 5775 PG: 567 & DB: 1069, PG: 716
3. ZONING DISTRICT: – O&I-1
4. BUILDING SETBACKS: F-20' SIDES-10' REAR-20'
5. TOTAL AMOUNT OF ACREAGE WITHIN THE PROJECT BOUNDARIES:
   TOTAL PARCEL SIZE = 2.19 ACRES / 95,396 SF
   (EXIST. PARCEL 1 = 1.09 ACRES + ADDED PARCEL 2 = 1.10 ACRES)
6. BUILDING SIZE (SQUARE FOOTAGE)
   EXISTING: 11,056 SF
   PROPOSED: 8,526 SF
7. CALCULATIONS FOR BUILDING LOT COVERAGE:
   BUILDING: 8,526 SF / 8.93%
   4 LANE TELLER DRIVE THRU: 1,572 SF / 1.65%
   2 LANE ATM DRIVE THRU: 532 SF / 0.56%
   ENTRY CANOPY: 789 SF / 0.83%
   TOTAL: 11,419 SF / 11.97%
8. NUMBER OF BUILDINGS: 1
9. BUILDING HEIGHT: 36'-6"
10. NUMBER OF STORIES AND SQUARE FEET PER FLOOR: 1 STORY @ 8,526 SF
11. TOTAL AMOUNT AND PERCENT OF IMPERVIOUS SURFACE AREAS, BEFORE AND AFTER DEVELOPMENT:
    IMPERVIOUS SURFACE AREAS BEFORE: 44,408.00 SF OR 1.02 ACRES
    IMPERVIOUS SURFACE AREAS AFTER: 57,897.00 SF OR 1.33 ACRES
    IMPERVIOUS SURFACE AREAS ADDITION: 13,491.00 SF OR .31 ACRES
12. OFF STREET PARKING CALCULATIONS BASED ON USE; BANKING MAX IS 1 PER 200 SF/MIN. 1 PER 400 SF OR UP TO 2.5 X MINIMUM IF PERVIOUS PAVEMENT IS USED FOR SPACE ABOVE 1.5 X MINIMUM.
    MINIMUM PARKING REQUIRED; BASED ON OVERALL SQUARE FOOTAGE ÷ 400: 21
    MAXIMUM PARKING REQUIRED; BASED ON OVERALL SQUARE FOOTAGE ÷ 200: 43
    PARKING PROVIDED: 54 (INCLUDING 3 ACCESIBLE & 24 PERVIOUS)
    (22 PERVIOUS REQUIRED, 24 PROVIDED)
    BICYCLES REQUIRED: 5 BICYCLES PROVIDED: 5
13. CAMA LAND USE CLASSIFICATION: DEVELOPED
14. TOPOGRAPHICAL INFORMATION: NAVD

SITE NOTES

1. ALL DIMENSIONS TAKEN FROM FACE OF BUILDING OR FACE OF CURB UNLESS OTHERWISE NOTED.
2. ALL SITE IMPROVEMENTS TO COMPLY WITH THE CITY OF WILMINGTON DESIGN GUIDELINES.
3. ALL CONSTRUCTION SHALL BE IN ACCORDANCE WITH ALL CITY OF WILMINGTON STANDARDS.
4. REFER TO SHEETS L0101 AND L1201 FOR COORDINATION OF LIMITS OF DISTURBANCE AND CLEARING LIMITS.
5. COORDINATE ALL CURB AND STREET GRADES IN INTERSECTION WITH CITY INSPECTOR.
6. ALL ROAD IMPROVEMENTS ARE TO BE COORDINATED WITH CITY OF WILMINGTON REQUIREMENTS.
7. ALL AREA WITHIN SIGHT TRIANGLES SHALL BE KEPT CLEAR OF ALL POTENTIAL OBSTRUCTION INCLUDING BUT NOT LIMITED TO BUILDINGS, SIGNS, ECT. PLANT ONLY LOW GROWING SHRUBS(30" MAX.) ABOVE CURB AND TREES WITH HEIGHT OF 8' IN THIS SITE TRIANGLE AREA. PARKING SPACES MUST BE CONSTRUCTED TO NOT OBSTRUCT VIEW BY EITHER PROHIBITING PARKING WITHIN THE SITE TRIANGLE OR BY REDUCING FINISHED ELEVATION OF PARKING LOT SO THAT NO MORE THAN 30" OF A PARKED VEHICLE EXTENDS ABOVE FINISHED ELEVATION OF A DRIVEWAY.
8. IN ORDER TO ENSURE PROPER DRAINAGE, KEEP A MINIMUM OF 1.0% SLOPE ON THE CURB.
9. ALL ACCESSIBLE RAMPS AND SIDEWALKS TO BE INSPECTED BY CITY INSPECTOR AFTER FORMING AND PRIOR TO POURING.
10. SITE TRIANGLES SHOWN ARE THE MINIMUM REQUIRED
11. SUBSURFACE DRAINAGE FACILITIES MAY BE REQUIRED IN THE STREET RIGHT-OF-WAY IF DEEMED NECESSARY BY THE INSPECTOR.
12. NON-STANDARD ITEMS (IE: PAVERS, IRRIGATION SYSTEMS, ETC.) IN THE RIGHT-OF-WAY WILL REQUIRE A RIGHT-OF-WAY ENCROACHMENT AGREEMENT WITH THE CITY OF WILMINGTON BEFORE INSTALLATION
13. ANY EXISTING SIDEWALK THAT IS EITHER DAMAGED OR NON-ADA COMPLIANT SHALL BE REPLACED AS PART OF THIS PROJECT.
14. FEMA 100-YEAR FLOODPLAIN: THIS PROPERTY IS NOT WITHIN A DESIGNATED SPECIAL FLOOD HAZARD AREA
15. ALL PAVEMENT MARKINGS IN PUBLIC RIGHTS-OF-WAY AND FOR DRIVEWAYS ARE TO BE THERMOPLASTIC AND MEET CITY AND/ OR NCDOT STANDARDS (DETAIL SD-13 C OF WILMINGTON TECH STANDARDS).
16. ALL SIGNS AND PAVEMENT MARKINGS IN AREAS OPEN TO PUBLIC TRAFFIC ARE TO MEET MUTCD (MANUAL ON UNIFORM TRAFFIC CONTROL DEVICES) STANDARDS. DETAIL SD 15-13 CITY OF WILMINGTON TECH STANDARDS.
17. ALL TRAFFIC CONTROL SIGNS AND MARKINGS OFF THE RIGHT OF WAY ARE TO BE MAINTAINED BY THE PROPERTY OWNER IN ACCORDANCE WITH MUTCD STANDARDS.
18. ALL PARKING STALL MARKINGS AND LANE ARROWS WITHIN THE PARKING AREAS SHALL NE WHITE.
19. TRAFFIC ENGINEERING MUST APPROVE OF PAVEMENT MARKING LAYOUT PRIOR TO ACTUAL STRIPING.
20. ANY BROKEN OR MISSING SIDEWALK PANELS, DRIVEWAY PANELS AND CURBING SHALL BE REPLACED.
21. CONTACT TRAFFIC ENGENEERING AT 910-341-7888 FORTY-EIGHT HOURS PRIOR TO ANY EXCAVATION IN THE RIGHT-OF-WAY.

RADIUS CURVE LEGEND
A = 3.0
B = 5.0
C = 10.0

North Carolina One-Call Center, Inc.
1-800-632-4949

OBrienAtkins
Architecture/Engineering/Landscape Architecture/Planning/Interior Design
O'Brien/Atkins Associates, PA
PO Box 12057
Research Triangle Park, North Carolina 27709
919.941.5000 - Durham
919.755.1032 - Raleigh
919.941.9006 - Fax
www.obrienatkins.com

O'Brien / Atkins Associates P.A. Registered Professional Engineering Corporation Certificate No. 171 North Carolina Durham

North Carolina Registered Professional Engineer Seal 14485 4/23/14 Robert Kirk Taylor

State Employees' Credit Union
Randall Parkway Office
5011 Randall Parkway
Wilmington, North Carolina

Issued	Date	By
CD	4/23/14	DRK

Project No. 2013031
Checked By DRK
Drawn By YM/ FD
Scale 1"=20'
Drawing LAYOUT PLAN
File Name L1101-RPKWY.dwg
Sheet L1101
2 OF 6 SHEETS

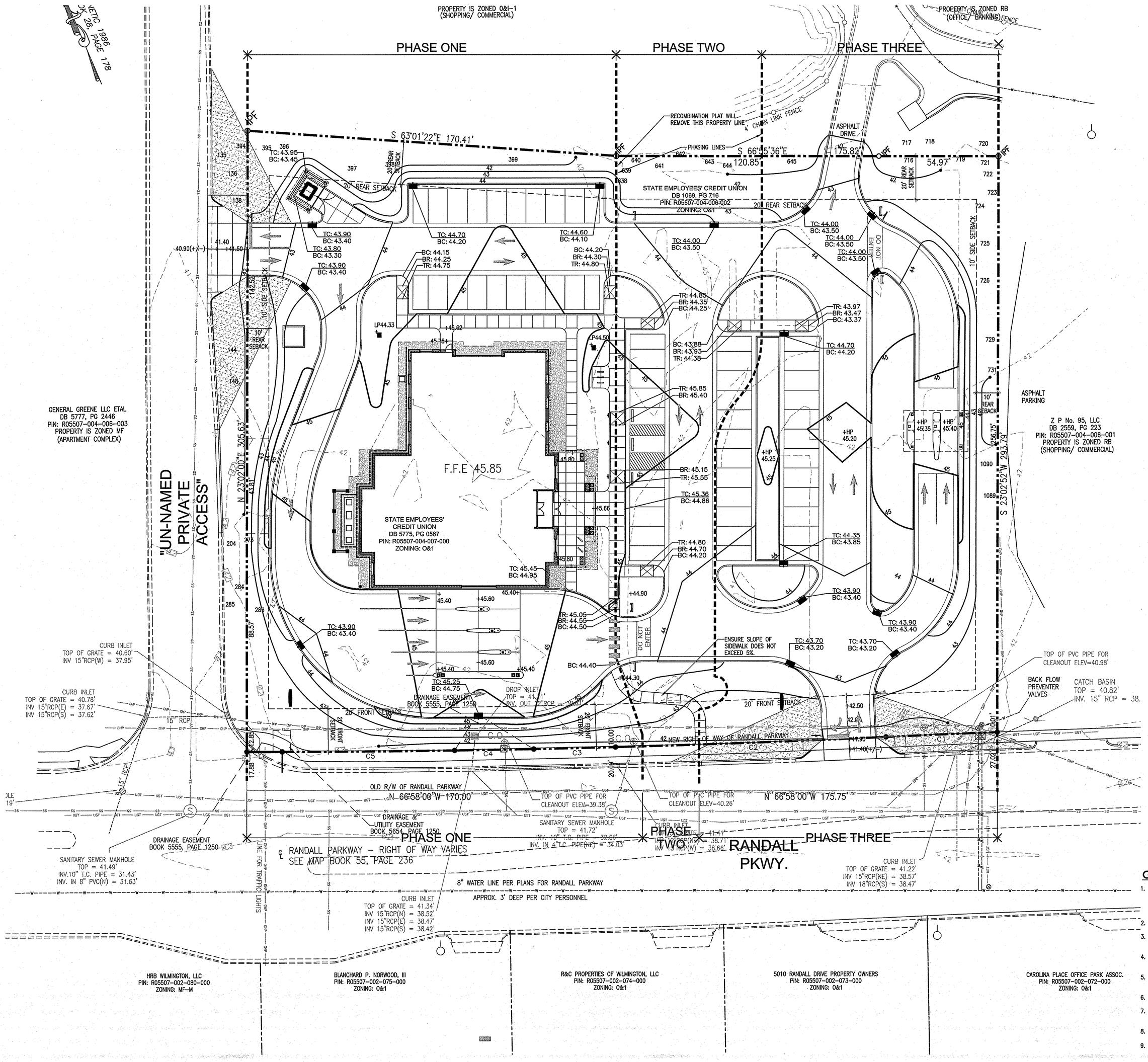

A5 L1201 GRADING PLAN
1"=20'-0"
0 20' 40'

GRADING AND DRAINAGE NOTES

1. WITHIN THE SIGHT TRIANGLES SHOWN ON THIS PLAN, ALL PROPOSED VEGETATION WITHIN SIGHT TRIANGLES SHALL NOT INTERFERE WITH CLEAR VISUAL SIGHT LINES FROM 30"-10'. OBSTRUCTIONS INCLUDE BUT ARE NOT LIMITED TO ANY BERM, FOLIAGE, FENCE, WALL, SIGN, OR OTHER OBJECT.
2. ALL CONSTRUCTION SHALL BE IN ACCORDANCE WITH CITY OF WILMINGTON STANDARDS.
3. REMOVE PHASE I DIVERSION DITCH ONLY AFTER CURB AND GUTTER AND SIGNIFICANT PORTIONS OF THE PERMANENT STORM DRAINAGE SYSTEMS HAVE BEEN INSTALLED.
4. INITIATE EROSION CONTROL SEQUENCE BEFORE BEGINNING CLEARING AND GRADING OPERATIONS.
5. CLEAR AREAS TO BE GRADED OF ALL VEGETATION. PROTECT VEGETATION BEYOND GRADING LIMITS.
6. STRIP TOPSOIL TO FULL DEPTH IN AREAS TO BE GRADED.
7. COMPACT ALL FILL AREAS TO 95% OF MAXIMUM DENSITY, OR PER GEOTECHNICAL RECOMMENDATIONS.
8. ALL AREAS ARE TO BE GRADED SO THAT NO AREAS OF STANDING WATER OCCUR.
9. PROPOSED SPOT ELEVATIONS ARE SHOWN AT FINISHED GRADE (GUTTER FLOW LINE ELEVATION, WHERE APPLICABLE).
10. OPERATOR SHALL FIELD VERIFY EXISTING TOPOGRAPHY IN RELATION TO THE PROPOSED GRADES TO ENSURE DRAINAGE IN THE DIRECTIONS INDICATED ON THE PLAN.
11. LANDINGS OUTSIDE ALL DOORS SHALL BE SIZED PER THE NCBC, BE AT THE SAME ELEVATION AS THE FFE, AND SHALL HAVE A MAX 2% SLOPE IN ANY DIRECTION INCLUDING IN THE DIAGONAL.
12. THE SLOPES IN THE HANDICAP PARKING SPACE/ACCESS AISLE AREA SHALL NOT EXCEED 2% IN ANY DIRECTION INCLUDING THE DIAGONAL.
13. THERE SHALL BE NO DESIGNATED PEDESTRIAN ROUTES/SIDEWALKS WITHIN THE SITE, EXCEPT WHERE LABELED AS A RAMP WITH RAILS, WHICH EXCEED 5% SLOPE IN THE DIRECTION OF TRAVEL AND 2% CROSS SLOPE.
14. THERE SHALL BE LEVEL TURNING AREAS (MAX. 2% SLOPE IN ANY DIRECTION INCLUDING THE DIAGONAL) ON ALL SIDEWALKS WHERE AN INTERSECTING SIDEWALK CONNECTS WITH IN.

North Carolina One-Call Center, Inc. 1-800-632-4949

GRADING PLAN LEGEND:

NEW	DESCRIPTION
	CATCH BASIN
	NYLOPLAST INLET
	DROP INLET
D	STORM DRAINAGE MANHOLE
24" RCP	STORM DRAINAGE PIPE
	FLARED END SECTION
	FENCE
	TREELINE
282	CONTOUR
107.85 +	SPOT ELEVATION
	PROPERTY LINE
	SILT FENCE
TC 107.40 BC 106.90	TOP OF CURB ELEVATION / BOTTOM OF CURB ELEVATION
TR 107.40 BR 106.90	TOP OF RAMP ELEVATION / BOTTOM OF RAMP ELEVATION

OBrienAtkins
Architecture/Engineering/Landscape Architecture/Planning/Interior Design
OBrien/Atkins Associates, PA
8601 Six Forks Road
Research Triangle Park
North Carolina 27709
919.941.5000 - Durham
919.872.1223 - Raleigh
919.941.5005 - Fax
www.obrienatkins.com

NORTH CAROLINA ARCHITECTURE FIRM CERT. NO. 171

NORTH CAROLINA REGISTERED PROFESSIONAL ENGINEER SEAL 1485 4/23/14 DAVID ROBERT KNOWLES

State Employees' Credit Union

Randall Parkway Office
5011 Randall Parkway
Wilmington, North Carolina

Issued	Date	By
CD	4/23/14	DRK

Project No. 2013031
Checked By DRK
Drawn By YM/ FD
Scale 1"=20'
Drawing GRADING PLAN
File Name L1201-RPKWY.dwg
Sheet L1201

3 OF 6 SHEETS

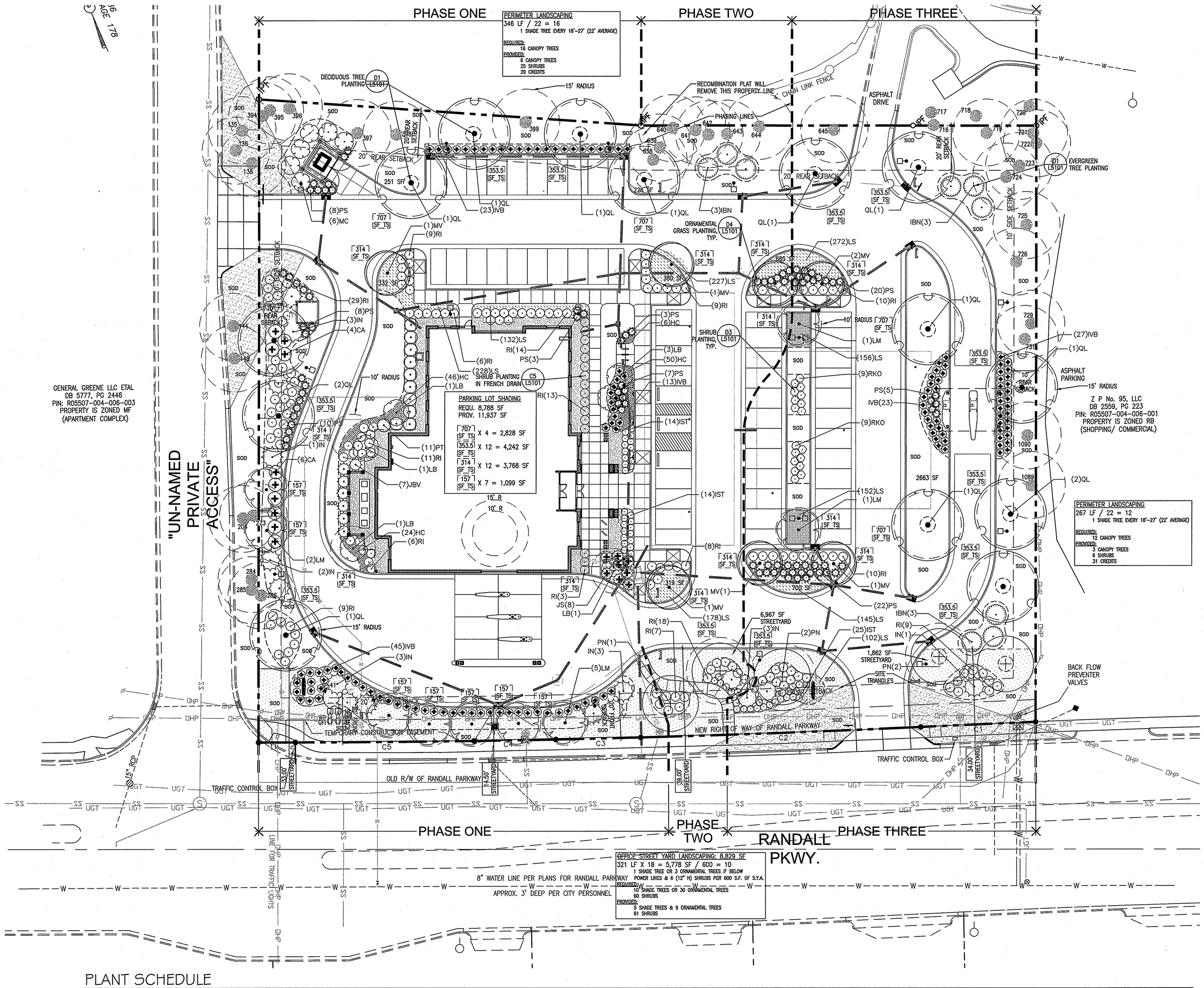

TREE CREDIT TABLE

TREE #	DESCRIPTION	CREDIT
135	3-10" MAPLE CLUSTER	2
136	7" MAPLE	2
137	15" OAK	3
138	3-15" MAPLE CLUSTER	3
144	2-7" MAPLE CLUSTER	2
148	3-8" MAPLE CLUSTER	2
204	13" OAK	3
273	8" BLACK GUM	2
284	8" CHERRY & 10" OAK	4
285	22" MAPLE	4
394	12" PINE	3
395	15" SWEET GUM	3
396	14" MAPLE	3
397	7" OAK	2
398	7" OAK	2
399	2-12" SWEET GUMS	3
638	10" OAK	2
639	6" MAPLE	2
640	9" CHERRY	2
641	12" MAPLE	3
642	12" MAPLE	3
643	2" CAMELLIA BUSH	0
644	9" OAK	2
645	10" CHERRY	2
716	23" OAK	4
719	10" BRADFORD PEAR	2
721	8" BRADFORD PEAR	2
722	8" CHERRY	2
723	21" OAK	4
724	6" BRADFORD PEAR	2
725	14" OAK	3
726	30" OAK	5
729	16" PINE	3
731	18" PINE	4
1089	12" OAK	3
1090	15" PINE	3

PLANT SCHEDULE

TREES	CODE	QTY	COMMON NAME / BOTANICAL NAME	CAL	HGT.
	IN	16	Nellie Stevens Holly / Ilex x 'Nellie R Stevens'	–	8'
	LB	7	Crape Myrtle / Lagerstroemia x 'Biloxi'	–	8'-10' HT
	LM	9	Lavender Crape Myrtle Multi-Trunk / Lagerstroemia x 'Muskogee' Multi-Trunk	–	8'-10' HT
	MV	7	Sweet Bay / Magnolia virginiana	–	8'-10' HT
	PN	5	Newport Flowering Plum / Prunus cerasifera 'Newport'	–	8'-10' HT
	QL	14	Highbeam Overcup Oak / Quercus lyrata 'Highbeam'	3.0"	14'-16'

SHRUBS	CODE	QTY	COMMON NAME / BOTANICAL NAME	HGHT	CONT
	CA	10	American Beautyberry / Callicarpa americana	32" HGT & SPD	
	IBN	9	Dwarf Burford Holly / Ilex cornuta 'Burfordii Nana'	4' HT.	
	IST	53	Soft Touch Japanese Holly / Ilex crenata 'Soft Touch'	12" HT & 18" SPD	
	IVB	131	Bordeaux Holly / Ilex vomitoria 'Bordeaux'	24" HT & SPD	
	JS	8	Sargent Juniper / Juniperus chinensis sargentii	24" HT & SPD	
	JBV	7	Juniper / Juniperus chinensis 'Blue Vase'	4' HT.	
	MC	6	Wax Myrtle / Myrica cerifera	32" HGT & SPD	
	PS	86	Burgundy Switch Grass / Panicum virgatum 'Shenendoah' Fully Rooted	–	3 GAL.
	PT	11	Mock Orange / Pittosporum tobira 'Glen Compact'	32" HGT & SPD	
	RI	171	Pink Lady Indian Hawthorn / Rhaphiolepis indica 'Pink Lady'	24" HT & SPD	
	RKO	18	Rose / Rosa x 'Knockout' TM	24" HT.	

GROUND COVERS	CODE	QTY	COMMON NAME / BOTANICAL NAME	CONT	SPACING
	HC	128	Creeping St. John's Wort / Hypericum calycinum 'Senior'	1 gal	18" o.c.
	LS	1,592	Creeping Lily Turf / Liriope spicata	4"pot	12" o.c.

PLANTING NOTES:

1. ALL NEW PLANT AREAS OF SITE ARE TO BE IRRIGATED AND SYSTEM DESIGN SUBMITTED TO THE ARCHITECT FOR REVIEW PRIOR TO INSTALLATION.
2. LANDSCAPE CONTRACTOR TO VERIFY LOCATION OF UNDERGROUND UTILITIES BEFORE PLANTING.
3. PLANT SHRUBS 3 FEET FROM CURB IN PARKING AREAS.
4. PLANT MATERIAL WILL BE REJECTED UNLESS ANY AND ALL PLANT MATERIAL ARE OF SIZE, SPREAD, CALIPER, GENUS, SPECIES AND VARIETY SHOWN. ANY MATERIAL WITH EVIDENCE OF DISEASE OR PEST INFESTATIONS WILL BE REJECTED. ALL REWORK WILL BE AT THE EXPENSE OF THE CONTRACTOR. SUBSTITUTIONS WILL BE PERMITTED ONLY UPON SUBMISSION OF WRITTEN PROOF TO THE ARCHITECT THAT A SPECIFIED PLANT IS NOT OBTAINABLE.
5. ALL DISTURBED AREAS ARE TO BE STABILIZED WITH LAWN, PLANTINGS, OR MULCH.
6. PRIOR TO ANY CLEARING, GRADING, OR CONSTRUCTION ACTIVITY, TREE PROTECTION FENCING WILL BE INSTALLED AROUND PROTECTED TREES OR GROVES OF TREES, AND NO CONSTRUCTION WORKERS, TOOLS, MATERIALS OR VEHICLES ARE PERMITTED WITHIN THE TREE PROTECTION FENCING.
7. WITHIN THE SIGHT TRIANGLES SHOWN ON THIS PLAN, ALL PROPOSED VEGETATION WITHIN SIGHT TRIANGLES SHALL NOT INTERFERE WITH CLEAR VISUAL SIGHT LINES FROM 30"-10'. OBSTRUCTIONS INCLUDE BUT ARE NOT LIMITED TO ANY BERM, FOLIAGE, FENCE, WALL, SIGN, OR OTHER OBJECT.

North Carolina One-Call Center, Inc.
1-800-632-4949

A5 L1301 PLANTING PLAN 1"=20'-0"

OBrienAtkins
Architecture/Engineering/Landscape Architecture/Planning/Interior Design
919.941.5000 - Durham
919.872.5115 - Raleigh
919.941.5005 - Fax
www.obrienatkins.com
OBrien/Atkins Associates, PA
P.O. Box 12077
Research Triangle Park
North Carolina 27709

State Employees' Credit Union
Randall Parkway Office
5011 Randall Parkway
Wilmington, North Carolina

Issued	Date	By
CD	4/23/14	DRK

Project No. 2013031
Checked By DRK
Drawn By YM/ FD
Scale 1"=20'
Drawing PLANTING PLAN
File Name L1301-RPKWY.dwg
Sheet L1301
4 of 6 SHEETS

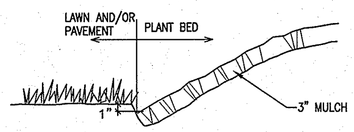

D5 L5101 MULCH EDGE
N.T.S. Plant_Mulch.dwg

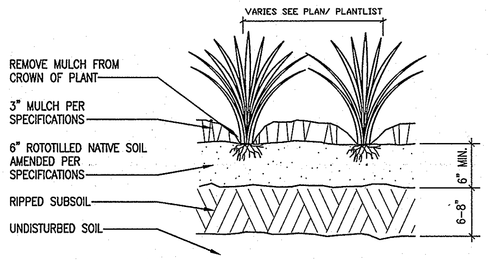

D4 L5101 ORNAMENTAL GRASS PLANTING
N.T.S. Plant_Ornamental Grass.dwg

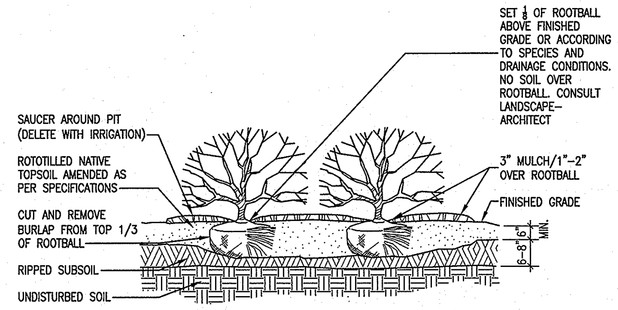

D3 5101 SHRUB PLANTING
N.T.S. Plant_Shrub.dwg

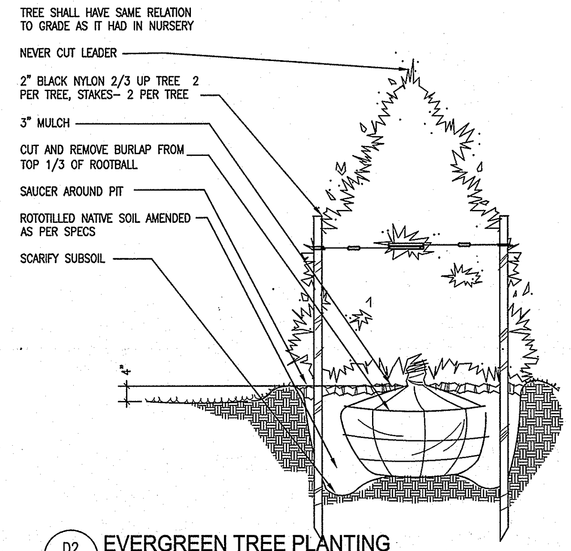

D2 L5101 EVERGREEN TREE PLANTING
N.T.S. Plant_Evergreen.dwg

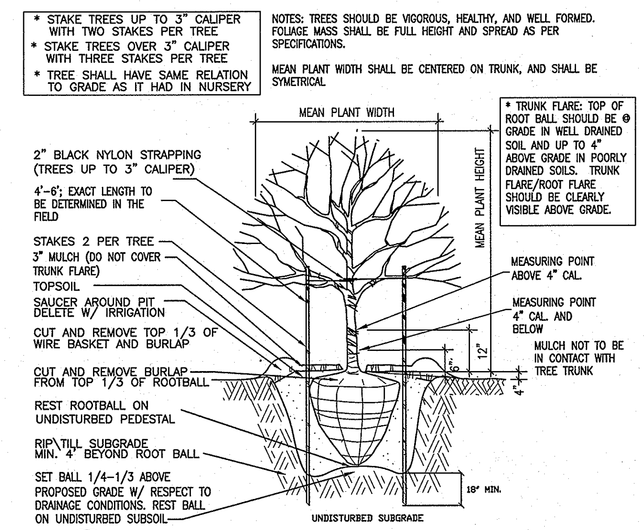

D1 L5101 DECIDUOUS TREE PLANTING
N.T.S. Plant_Tree.dwg

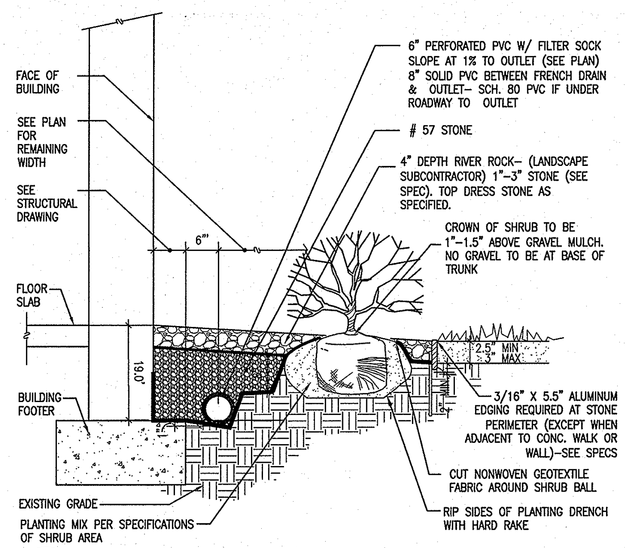

C5 L5101 SHRUB PLANTING WITHIN FRENCH DRAIN
3/4" = 1'-0" FrenchDrain_Plnt.dwg

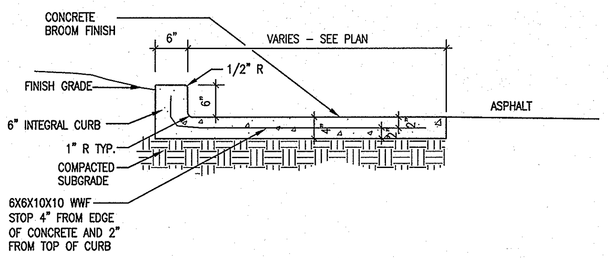

C4 L5101 CONCRETE WALK WITH 6" INTEGRAL CURB
3/4"=1'-0" walk-6-int_curb.dwg

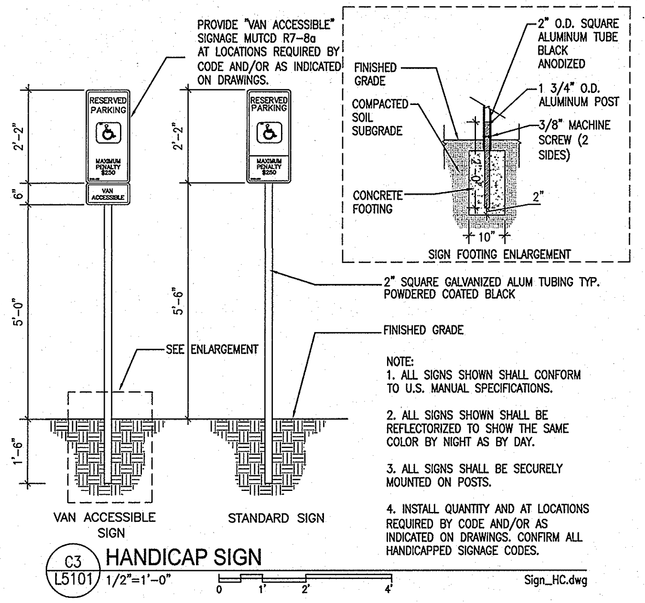

NOTE:
1. ALL SIGNS SHOWN SHALL CONFORM TO U.S. MANUAL SPECIFICATIONS.
2. ALL SIGNS SHOWN SHALL BE REFLECTORIZED TO SHOW THE SAME COLOR BY NIGHT AS BY DAY.
3. ALL SIGNS SHALL BE SECURELY MOUNTED ON POSTS.
4. INSTALL QUANTITY AND AT LOCATIONS REQUIRED BY CODE AND/OR AS INDICATED ON DRAWINGS. CONFIRM ALL HANDICAPPED SIGNAGE CODES.

C3 L5101 HANDICAP SIGN
1/2"=1'-0" Sign_HC.dwg

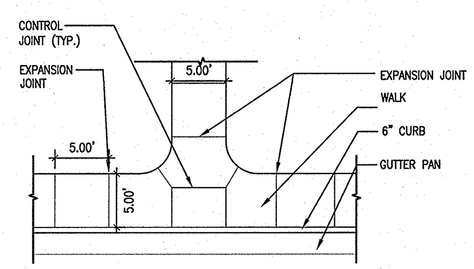

C2 L5101 SIDEWALK INTERSECTION
NTS Sidewalk_intersection.dwg

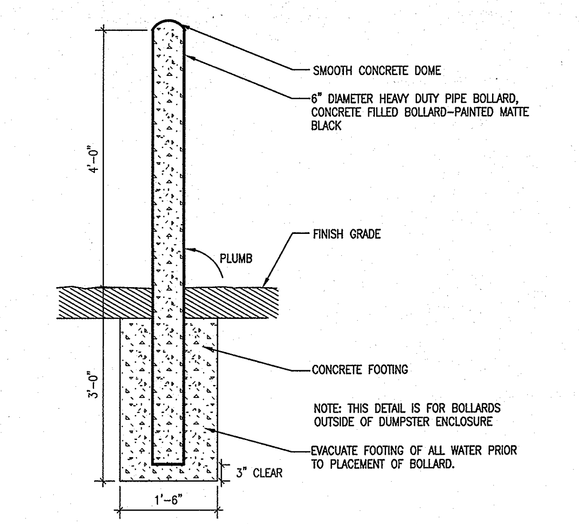

C1 L5101 FIXED BOLLARD
3/4"=1'-0" Bollard_Fixed.dwg

NOTES:
- ALL PAVEMENT MARKING SYMBOLS SHALL BE REFLECTIVE WHITE IN COLOR.
- PAVEMENT MARKING SYMBOLS SHALL NOT BE LOCATED AS TO ENCROACH INTO INTERSECTION AREAS.
- ON PORTLAND CEMENT CONCRETE PAVEMENTS, PAVEMENT MARKINGS SHALL NOT BE PLACED ACROSS TRANSVERSE EXPANSION JOINTS, UNLESS APPROVED BY THE ENGINEER.
- ALL SYMBOLS SHALL CONFORM TO THE FHWA "STANDARD ALPHABETS FOR HIGHWAY SIGNS AND PAVEMENT MARKINGS", (REFER TO SHEETS 1 THRU 7). SYMBOL DIMENSIONS MAY VARY AMONG MANUFACTURERS, THEREFORE SLIGHT VARIANCES ARE ACCEPTABLE, HOWEVER, ALL SYMBOLS ARE REQUIRED TO BE APPROVED BY THE LANDSCAPE ARCHITECT.

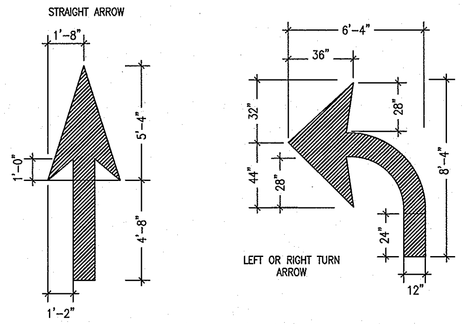

B4 L5101 PAVEMENT MARKINGS DETAIL
1/4"=1'-0" Pavement_Markings.dwg

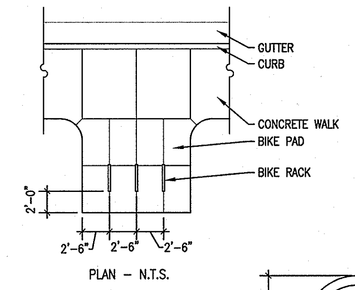

PLAN – N.T.S.

NOTES:
1. WALL SETBACK: A MINIMUM OF 24" SHOULD BE LEFT BETWEEN THE WALL AND THE LONG SIDE OF THE RACK. 36" IS THE RECOMMENDED SETBACK.
2. DISTANCE BETWEEN RACKS: A MINIMUM OF 24" SHOULD BE LEFT BETWEEN THE WALL AND THE LONG SIDE OF THE RACK. 36" IS THE RECOMMENDED SETBACK.
3. SEE LAYOUT FOR PAD DIMENSIONS.

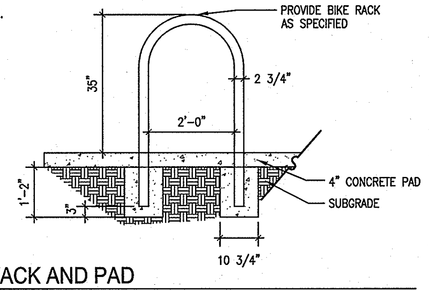

A5 L5102 BIKE RACK AND PAD
1/2"=1'-0" BIKE_RACK_U.dwg

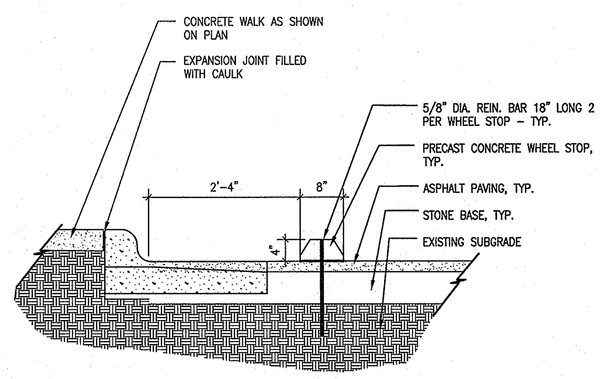

B2 L5101 CONCRETE WHEELSTOP
3/4"=1'-0" Conc_WheelStop.dwg

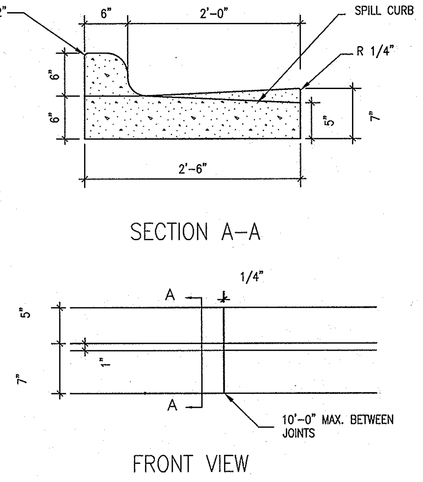

B1 L5101 CONCRETE CURB & GUTTER
1" = 1' – 0" Conc_CurbAndGutter_30inch.dwg

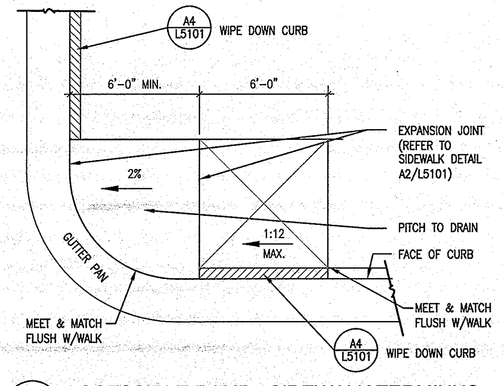

A5 L5101 ACCESSIBLE RAMP - SIDEWALK TERMINUS
1/4"=1'-0" Accessible Ramp_Sidewalk Terminus.dwg

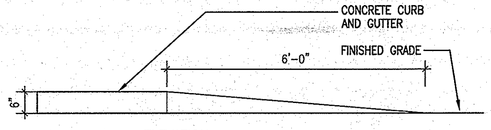

ELEVATION

A4 L5101 WIPE DOWN CURB
1/2"=1'-0" Conc_Curb_WipeDown.dwg

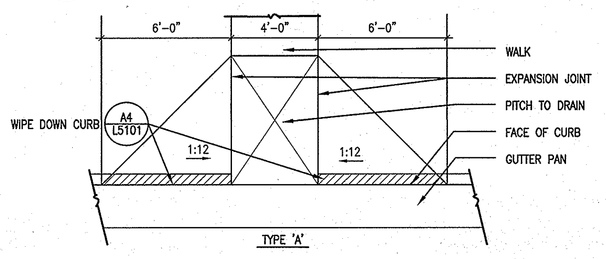

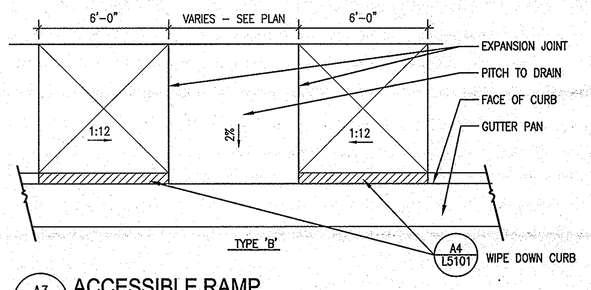

A3 L5101 ACCESSIBLE RAMP
1/4"=1'-0" Accessible Ramp_ Type A & B.dwg

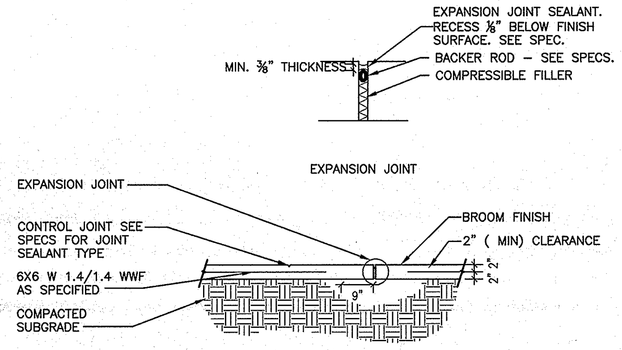

A2 L5101 CONCRETE SIDEWALK
1/2"=1'-0" Sidewalk_Concrete.dwg

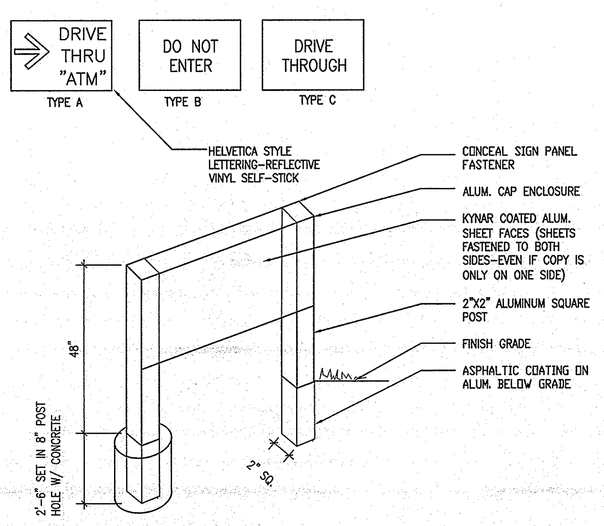

A1 L5101 DIRECTIONAL SIGN
NTS Sign_Direction.dwg

OBrienAtkins
Architecture/Engineering/Landscape Architecture/Planning/Interior Design
919.341.8000 - Durham
919.755.1032 - Raleigh
919.851.1450 - Cary
www.obriensatkins.com
O'Brien/Atkins Associates, PA
PO Box 12207
Research Triangle Park
North Carolina 27709

O'BRIEN / ATKINS ASSOCIATES P.A. REGISTERED ARCHITECTURAL CORPORATION CERT. NO. 171 NORTH CAROLINA DURHAM

NORTH CAROLINA PROFESSIONAL SEAL 1485 ENGINEER RICHARD ROBERT KAUTZ
4/23/14

State Employees' Credit Union
Randall Parkway Office
5011 Randall Parkway
Wilmington, North Carolina

Issued	Date	By
CD	4/23/14	DRK

Project No. 2013031
Checked By DK
Drawn By YM/ FD
Scale SEE INDIVIDUAL DETAILS
Drawing SITE DETAILS
File Name L5101-RPKWY.dwg
Sheet L5101
5 OF 6 SHEETS

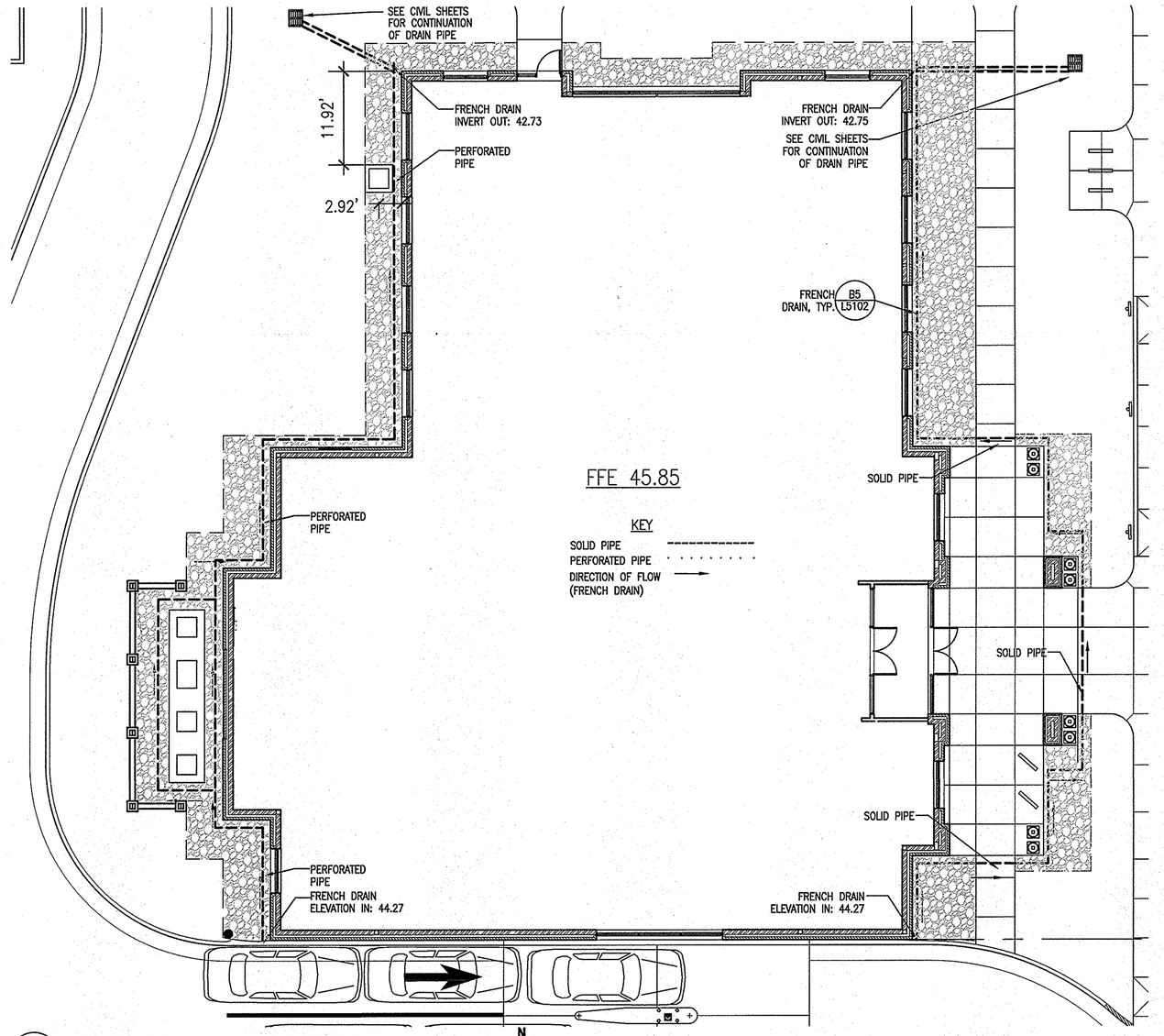

C5 L5102 FRENCH DRAIN ENLARGEMENT PLAN 1"=10'

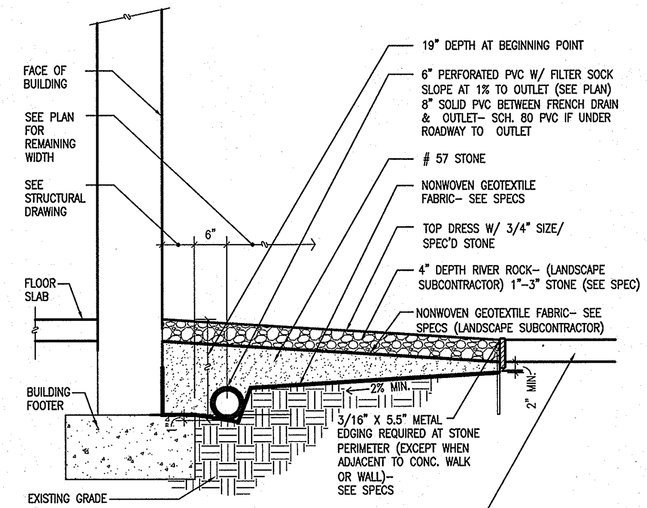

D1 L5102 FRENCH DRAIN 3/4" = 1'-0" French Drain.dwg

NOTE: SUBGRADE BE RIPPED OR TRENCHED TO IMPROVE SUBGRADE INFILTRATION

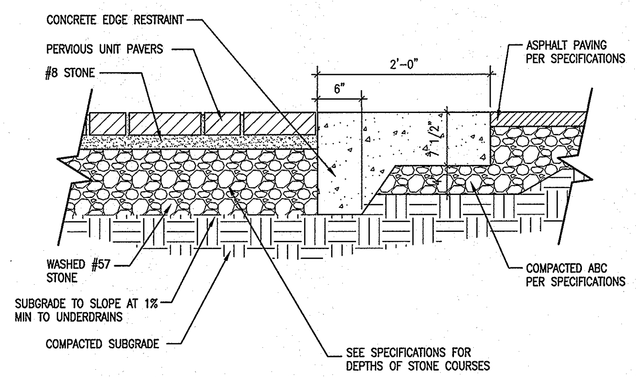

C2 L5102 PERVIOUS PAVEMENT W/ CONCRETE EDGE RESTRAINT 1" = 1'-0" pervious pave Conc_Edge.dwg

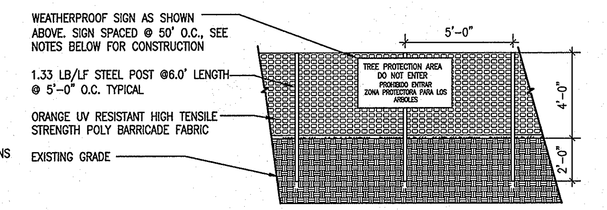

-WARNING SIGNS TO BE MADE OF DURABLE, WEATHERPROOF MATERIAL.
-LETTER TO BE 3" HIGH MIN., CLEARLY LEGIBLE AND SPACED AS SHOWN BELOW ON SIGN DETAIL.
-PLACE SIGN AT EACH END OF LINEAR TREE PROTECTION AREA AND 50' ON CENTER THEREAFTER.
-FOR TREE PROTECTION AREA LESS THAN 200' IN PERIMETER, PROVIDE NO LESS THAN ONE SIGN PER PROTECTION AREA.
-ATTACH SIGNS SECURELY TO FENCE POSTS AND FABRIC.
-MAINTAIN TREE PROTECTION FENCE THROUGHOUT THE DURATION OF THE PROJECT.

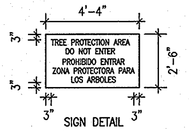

C1 L5102 TEMPORARY TREE PROTECTION FENCE 1/4"=1'-0" Eros_TreeFence.dwg

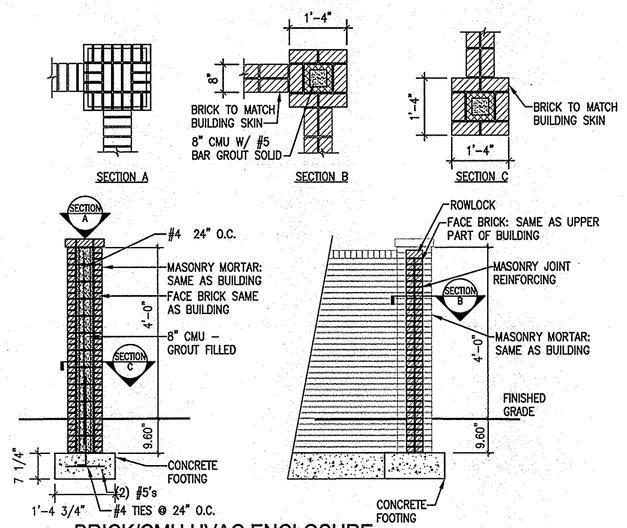

B5 L5102 BRICK/CMU HVAC ENCLOSURE COLUMN & WALL SECTIONS & CAP 1/2"=1'-0" Brick_cmu_wall_secs.dwg

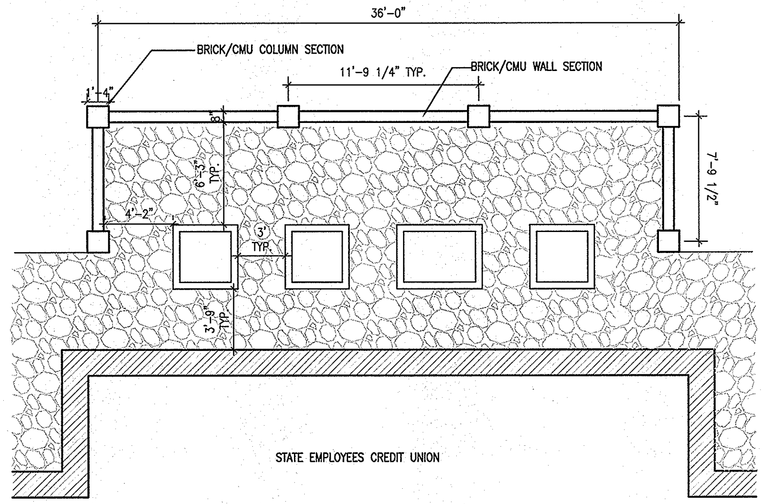

B4 L5102 BRICK/CMU HVAC ENCLOSURE - PLAN 3/16" = 1'-0"

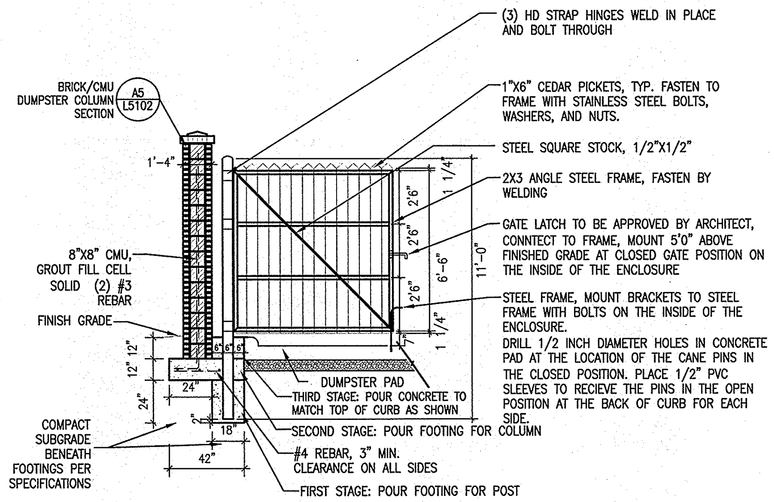

B2 L5102 GATE FRAME ELEVATION FOR DUMPSTER ENCLOSURE SCALE: NTS

NOTE: PAINT POST (3 COATS) AFTER ALL HARDWARE IS INSTALLED WITH BLACK SEMI-GLOSS ENAMEL PAINT.

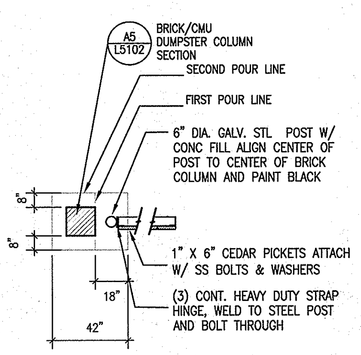

B1 L5102 BRICK/CMU DUMPSTER COLUMN AND GATE POST PLAN SCALE: NTS GateFrameGatePostPlanforBrickDumpEnclosure

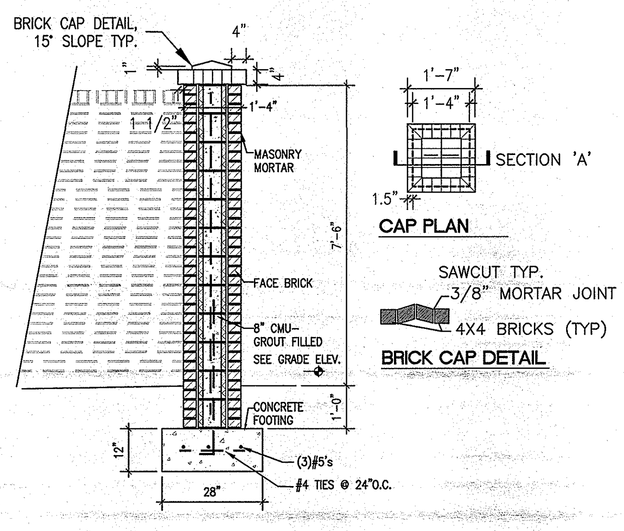

A5 L5102 BRICK VENEER DUMPSTER COLUMN SECTION 1/2" = 1'-0" BrickVeneerDumpsterColumnSection.dwg

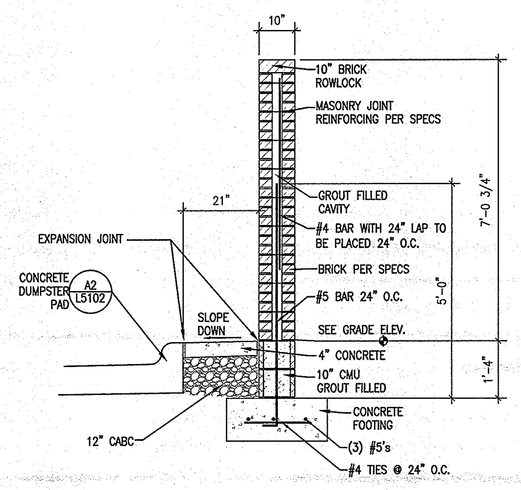

A4 L5102 BRICK VENEER DUMPSTER WALL SECTION 1/2" = 1'-0"

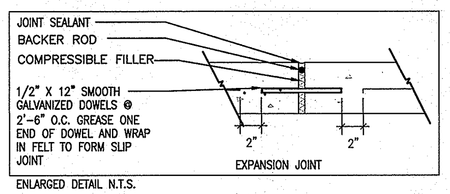

ENLARGED DETAIL N.T.S.

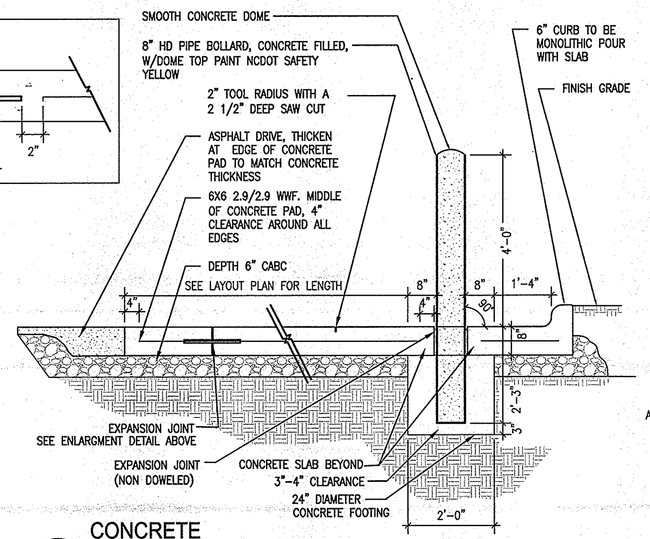

A2 L5102 CONCRETE DUMPSTER PAD WITH BOLLARDS 1/2"=1'-0" Concrete Dumpster Pad with Bollards.dwg

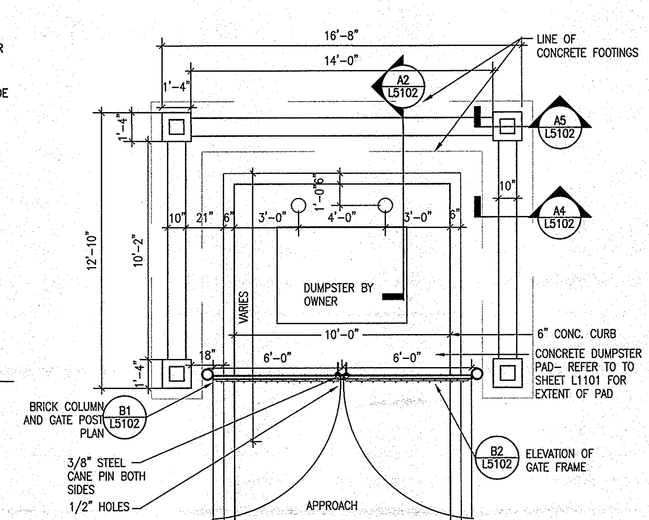

A1 L5102 BRICK DUMPSTER ENCLOSURE PLAN 1/4" = 1'-0"

OBrienAtkins
Architecture/Engineering/Landscape Architecture/Planning/Interior Design
OBrien/Atkins Associates, PA
P.O. Box 13037
Research Triangle Park
North Carolina 27709
919.941.9000 - Durham
919.755.1002 - Raleigh
919.941.9006 - Fax
www.obrienatkins.com

NORTH CAROLINA REGISTERED ARCHITECTURAL FIRM CERT. NO. 171 DURHAM

NORTH CAROLINA REGISTERED PROFESSIONAL ENGINEER 1485 GARY ROBERT KNIGHT

State Employees' Credit Union
Randall Parkway Office
5011 Randall Parkway
Wilmington, North Carolina

Issued	Date	By
CD	4/23/14	DRK

Project No. 2013031
Checked By DRK
Drawn By YM/ FD
Scale SEE INDIVIDUAL DETAILS
Drawing SITE DETAILS
File Name L5102-RPKWY.dwg
Sheet L5102
6 OF 6 SHEETS