CITY OF WILMINGTON
NEW HANOVER COUNTY, NORTH CAROLINA

SHIPYARD VILLAGE APARTMENTS

GRADING RELEASE

JULY 21, 2016

CLEARING & GRADING PERMIT SUBMITTAL SET

DEVELOPMENT INFORMATION:

OWNER/DEVELOPER:
SHIPYARD VILLAGE WILMINGTON, LLC
PO BOX 29169
GREENSBORO, NC 27429-9169
2100-D W. CORNWALLIS DR.
GREENSBORO, NC 27408

OWNER'S DESIGNATED REPRESENTATIVE:
VERNON POWELL, PRESIDENT
SHIPYARD VILLAGE WILMINGTON, LLC.
vernonbpowell@gmail.com
(336) 282-7200

PROJECT LAND PLANNER / REPRESENTATIVE:
TARA S. MURPHY, RLA, ASLA, LEED AP, PMP
McKIM & CREED, INC.
243 NORTH FRONT STREET
WILMINGTON, NORTH CAROLINA 28401
tschwenzfeier@mckimcreed.com
(910) 343-1048

PROJECT ENGINEER / REPRESENTATIVE:
TAMARA MURPHY, P.E.
McKIM & CREED, INC.
243 NORTH FRONT STREET
WILMINGTON, NORTH CAROLINA 28401
tmurphy@mckimcreed.com
(910) 343-1048

PROJECT ADDRESS:
2821 CAROLINA BEACH ROAD
WILMINGTON, NC 28412

TAX PARCEL IDENTIFICATION NUMBER:
R06506-008-020-000

PROPERTY ZONING:
MF-M MULTI-FAMILY RESIDENTIAL
DISTRICT, MEDIUM DENSITY
CS COMMERCIAL SERVICE

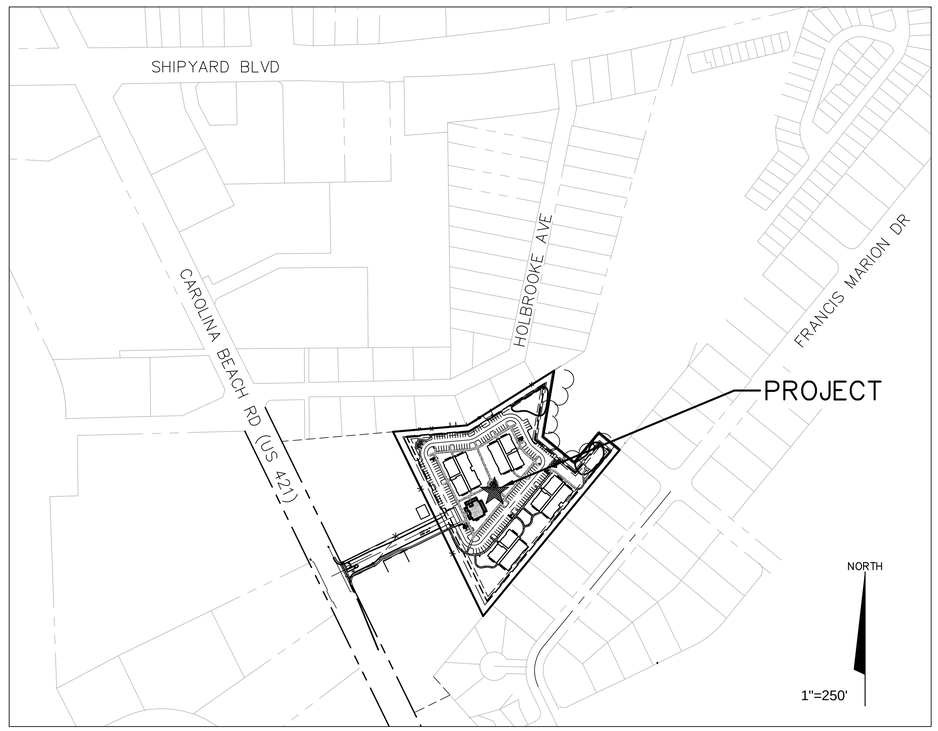

McKIM&CREED
243 North Front Street
Wilmington, North Carolina 28401
Phone: (910)343-1048 , Fax: (910)251-8282
NC LICENSE NO. F-1222
www.mckimcreed.com

NORTH CAROLINA PROFESSIONAL SEAL 038675 ENGINEER TAMARA C. MURPHY 7/21/16

SHEET INDEX

Sheet List Table

Sheet Number	Sheet Title	Sheet Description
1	G001	COVER
2	G002	GENERAL NOTES
~~3~~	~~CX101~~	~~SITE INVENTORY PLAN~~
4	CX102	TREE REMOVAL PLAN
5	CE101	SEDIMENT AND EROSION CONTROL PLAN - PHASE 1
6	CE102	SEDIMENT AND EROSION CONTROL - PHASE 2
7	CS101	OVERALL SITE PLAN
8	CS102	SITE PLAN ENLARGEMENT GALLEY LANE
9	CS102A	CAROLINA BEACH ROAD (US HIGHWAY 421) TURN LANE PLAN
10	CS103	OPEN SPACE PLAN
11	CG101	GRADING AND DRAINAGE PLAN
12	CG102	GRADING AND DRAINAGE PLAN SPOT ELEVATIONS
13	CU101	UTILITY PLAN
~~14~~	~~CL101~~	~~OVERALL LANDSCAPE PLAN~~
~~15~~	~~CL102~~	~~ENLARGED LANDSCAPE PLANS~~
~~16~~	~~CL501~~	~~LANDSCAPE DETAILS~~
17	CS501	SITE DETAILS
18	CS502	SITE DETAILS
~~19~~	~~CS503~~	~~SITE DETAILS~~
~~20~~	~~CS504~~	~~SITE DETAILS~~
21	CE501	EROSION CONTROL DETAILS
22	CN501	STORMWATER MANAGEMENT DETAILS
23	CN502	STORMWATER MANAGEMENT DETAILS
24	CG501	GRADING & DRAINAGE DETAILS
25	CU501	UTILITY DETAILS
26	CU502	UTILITY DETAILS
27	CU503	UTILITY DETAILS
28	CU504	UTILITY DETAILS
29	CU505	UTILITY DETAILS

PRELIMINARY PLANS
NOT FOR CONSTRUCTION

GENERAL NOTES:

1. NO LAND DISTURBANCE INCLUDING TREE REMOVAL IS TO OCCUR OUTSIDE THE LIMITS OF DISTURBANCE SHOWN ON THE PLANS.

2. LANDSCAPING PLAN INDICATING THE LOCATION OF REQUIRED STREET TREES SHALL BE SUBMITTED TO THE CITY OF WILMINGTON TRAFFIC ENGINEERING DIVISION AND PARKS AND RECREATION DEPARTMENT FOR REVIEW AND APPROVAL PRIOR TO THE RECORDING OF THE FINAL PLAT.

3. ZONING OF ADJACENT PROPERTIES IS AS NOTED.

SEEDBED PREPARATION:

1. CHISEL COMPACTED AREAS AND SPREAD TOPSOIL 3 INCHES DEEP OVER ADVERSE SOIL CONDITIONS, IF AVAILABLE.

2. RIP THE ENTRANCE AREA TO 6 INCHES DEPTH.

3. REMOVE ALL LOOSE ROCK, ROOTS, AND OTHER OBSTRUCTIONS LEAVING SURFACE REASONABLY SMOOTH AND UNIFORM.

4. APPLY AGRICULTURAL LIME, FERTILIZER, AND SUPERPHOSPHATE UNIFORMLY AND MIX WITH SOIL (SEE BELOW*).

5. CONTINUE TILLAGE UNTIL A WELL - PULVERIZED, FIRM, REASONABLY UNIFORM SEEDBED IS PREPARED 4 TO 6 INCHES DEEP.

6. SEED ON A FRESHLY PREPARED SEEDBED AND COVER SEED LIGHTLY WITH SEEDING EQUIPMENT OR CULTIPACK AFTER SEEDING.

7. MULCH IMMEDIATELY AFTER SEEDING AND ANCHOR MULCH.

8. INSPECT ALL SEEDED AREAS AND MAKE NECESSARY REPAIRS OR RE-SEEDINGS WITHIN THE PLANTING SEASON, IF POSSIBLE. IF STAND SHOULD BE OVER 60% DAMAGED, RE-ESTABLISH FOLLOWING ORIGINAL LIME, FERTILIZER AND SEEDING RATES.

9. CONSULT CONSERVATION INSPECTOR ON MAINTENANCE TREATMENT AND FERTILIZATION AFTER PERMANENT COVER IS ESTABLISHED.

10. APPLY: AGRICULTURAL LIMESTONE - 2 TONS/ACRE
FERTILIZER - 1000 LBS/ACRE (10-10-10)
SUPERPHOSPHATE - 500 LBS/ACRE (20%)
MULCH - 2 TONS/ACRE (SMALL GRAIN STRAW)
ANCHOR - ASPHALT EMULSION AT 450 GAL/ACRE

TEMPORARY SEEDING

GRASS TYPE	AMOUNT/ 1000 S.F.	TIME OF SEEDING	INITIAL
RYE GRAIN	1-2 LBS.	APRIL - JUNE	25 LBS. 10-10-10
BROWNTOP MILLET	1-2 LBS	JUNE - AUGUST	25 LBS 10-10-10

PERMANENT SEEDING

GRASS TYPE	AMOUNT/ 1000 S.F.	TIME OF SEEDING	INITIAL
BERMUDA, COMMON	1-2 LBS.	APRIL - JUNE	25 LBS. 10-10-10
FESCUE, TALL (KENTUCKY 31)	5-7 LBS	JUNE - AUGUST FEB. - OCT.	25 LBS 10-10-10
SERICEA LESPEDEZA (SLOPES	1-2 LBS	MARCH - APRIL	25 LBS 10-10-10

GROUND STABILIZATION CRITERIA

SITE AREA DESCRIPTION	STABILIZATION TIMEFRAME	STABILIZATION TIMEFRAME EXCEPTIONS
PERIMETER DIKES, SWALES, DITCHES AND SLOPES	7 DAYS	NONE
HIGH QUALITY WATER ZONES	7 DAYS	NONE
SLOPES STEEPER THAN 3:1	7 DAYS	IF SLOPES ARE 10 FT OR LESS IN LENGTH AND ARE NOT STEEPER THAN 2:1, 14 DAYS ARE ALLOWED
SLOPES 3:1 OR FLATTER	14 DAYS	7 DAYS FOR SLOPES GREATER THAN 50 FT IN LENGTH
ALL OTHER AREAS WITH SLOPES FLATTER THAN 4:1	14 DAYS	NONE (EXCEPT FOR PERIMETERS AND HQW ZONES)

EXCAVATION, GRADING, AND BACKFILLING NOTES:

1. ANY UNDERCUTTING IN GOOD SOIL SHALL BE REPLACED AND THE REPLACEMENT MATERIAL SHALL BE COMPACTED TO NINETY-FIVE (95) PERCENT OF MAXIMUM DENSITY OBTAINED AT OPTIMUM MOISTURE CONTENT, AS DETERMINED BY THE ASTM D 698 STANDARD PROCTOR TEST METHOD. IN THE EVENT THAT MATERIAL ENCOUNTERED AT PIPE GRADE, SUBGRADE OF PARKING OR ROADWAYS AND SUBGRADE OF BUILDING FOUNDATIONS IS FOUND TO BE SOFT, SPONGY, OR IN ANY OTHER WAY UNSUITABLE, THE CONTRACTOR SHALL NOTIFY THE GEOTECHNICAL ENGINEER IMMEDIATELY. SUCH UNSUITABLE MATERIAL SHALL BE REMOVED TO A DEPTH AS SPECIFIED BY THE GEOTECHNICAL ENGINEER AND REPLACED WITH A MINIMUM OF SIX (6) INCHES OF STONE, OR AS DIRECTED BY THE GEOTECHNICAL ENGINEER.

2. BEFORE BACKFILLING IS COMMENCED OVER PIPES AND OTHER INSTALLATIONS, EARTH FILL SHALL BE SOLIDLY TAMPED AROUND AND ABOVE THE PIPE TO A DEPTH OF ONE (1) FOOT ABOVE THE TOP OF THE PIPE. CARE SHALL BE TAKEN TO PREVENT ANY DISTURBANCE TO THE PIPE OR DAMAGE TO NEWLY MADE JOINTS. THE FILLING OF THE TRENCH SHALL BE CARRIED OUT SIMULTANEOUSLY ON BOTH SIDES OF THE PIPES IN SUCH A MANNER THAT INJURIOUS SIDE PRESSURES DO NOT OCCUR.

3. THE MATERIAL FOR BACKFILLING SHALL BE FREE FROM ALL PERISHABLE AND OBJECTIONABLE MATERIALS. BEFORE PLACING ANY BACKFILL, ALL RUBBISH, FORM, BLOCKS, WIRES OR OTHER UNSUITABLE MATERIAL SHALL BE REMOVED FROM EXCAVATION. THE BACK-FILLING OVER PIPES SHALL BE PLACED IN LAYERS NOT OVER SIX (6) INCHES THICK AND COMPACTED TO A MINIMUM DENSITY OF NINETY-FIVE (95) PERCENT OF THE MAXIMUM DRY DENSITY AS DETERMINED BY THE MODIFIED PROCTOR COMPACTION TEST TO A DEPTH OF 12 INCHES BELOW FINISHED GRADE. THE LAST 12 INCHES OF BACKFILL SHALL BE PLACED IN LAYERS NOT OVER SIX (6) INCHES THICK AND COMPACTED TO A MINIMUM DENSITY OF NINETY-EIGHT (98) PERCENT OF THE MAXIMUM DRY DENSITY AS DETERMINED BY THE MODIFIED PROCTOR COMPACTION TEST.

DEMOLITION NOTES:

1. THE CONTRACTOR SHALL VISIT THE SITE TO BECOME FAMILIARIZED WITH FIELD DEMOLITION CONDITIONS.

2. THE CONTRACTOR IS RESPONSIBLE FOR THE PROPER DISPOSAL OF ALL DEMOLISHED DEBRIS ASSOCIATED WITH THE PROJECT IN ACCORDANCE WITH THE PROJECT SPECIFICATIONS.

3. THE CONTRACTOR IS RESPONSIBLE FOR CONTROLLING DUST GENERATED BY THE WORK, INCLUDING BUT NOT LIMITED TO DEMOLITION AND CONSTRUCTION ACTIVITIES, SITE VEHICULAR TRAFFIC AND RELATED OPERATIONS.

4. THE CONTRACTOR IS RESPONSIBLE FOR HAVING ALL EXISTING UTILITIES LOCATED PRIOR TO BEGINNING ANY DEMOLITION. CONTRACTOR SHALL CONTACT NC ONE CALL AT LEAST 72 HOURS PRIOR TO BEGINNING CONSTRUCTION OR EXCAVATION TO HAVE EXISTING UTILITIES LOCATED.

5. EXISTING UTILITIES AND STRUCTURES SHOWN, BOTH UNDERGROUND AND ABOVE GROUND, ARE BASED ON FIELD SURVEY AND THE BEST AVAILABLE RECORD DRAWINGS. THE CONTRACTOR SHALL VERIFY FIELD CONDITIONS PRIOR TO BEGINNING RELATED CONSTRUCTION. ANY DISCREPANCIES SHALL BE REPORTED TO THE OWNER'S REPRESENTATIVE AND ENGINEER IMMEDIATELY.

6. THE CONTRACTOR IS RESPONSIBLE FOR THE COORDINATION OF DISCONNECTING AND ABANDONING ALL EXISTING UTILITIES WITH THE OWNER UNLESS OTHERWISE NOTED. ALL EXISTING UTILITIES AND ASSOCIATED PIPING, ETC. NOT IN USE ON THE SITE SHALL BE PROPERLY ABANDONED AND REMOVED AS REQUIRED. COORDINATE WITH THE OWNER.

7. THE CONTRACTOR IS RESPONSIBLE FOR THE PROTECTION OF ANY EXISTING UTILITIES THAT REMAIN IN SERVICE DURING DEMOLITION.

8. THE CONTRACTOR IS RESPONSIBLE FOR STABILIZATION OF ALL DISTURBED AREAS AND SLOPES ON AND OFF SITE IN ACCORDANCE WITH THE EROSION CONTROL MEASURES SPECIFIED ON THE PLANS AND IN THE SPECIFICATIONS. THE CONTRACTOR SHALL COORDINATE WITH THE OWNER TO DETERMINE WHO IS RESPONSIBLE FOR PROVIDING THE PERMANENT STABILIZATION MEASURES AND THE TYPE OF PERMANENT MEASURES PRIOR TO BEGINNING DEMOLITION AND CONSTRUCTION. THE PERMANENT STABILIZATION MEASURES SHALL BE IN PLACE AND ACCEPTABLE TO THE OWNER'S REPRESENTATIVE AND ENGINEER PRIOR TO PROJECT CLOSEOUT. COORDINATE INSPECTION WITH THE OWNER AND ENGINEER PRIOR TO PROJECT CLOSEOUT.

9. THE CONTRACTOR IS RESPONSIBLE FOR COORDINATING AND CONTACTING THE ENGINEER FOR THE REQUIRED INSPECTIONS ON THE PROJECT.

STORM DRAINAGE AND GRADING NOTES:

1. IN ACCORDANCE WITH NC GENERAL STATUTES, NPDES REGULATIONS, AND NCDENR REQUIREMENTS, STORMWATER DISCHARGE OUTFALLS SHALL BE INSPECTED BY THE CONTRACTOR. INSPECTIONS SHALL BE PERFORMED BY THE CONTRACTOR AFTER EACH STORM EVENT OF 1/2 INCH OR GREATER, WITH ONE WEEKLY INSPECTION MINIMUM. NCDENR STANDARD INSPECTION REPORTS SHALL BE PREPARED AND SIGNED WITH COPIES PROVIDED TO THE OWNER, ARCHITECT, AND ENGINEER, BY THE CONTRACTOR.

2. INLET PROTECTION SHALL BE INSTALLED AROUND OUTFALL. DEVICES SHALL BE CONSTRUCTED TO FINAL PROPOSED CONDITION UPON STABILIZATION OF CONTRIBUTING GROUND SURFACES AND REMOVAL OF SEDIMENT FROM STORM PIPES.

3. SEDIMENT/EROSION DEVICES SHALL BE CHECKED BY THE CONTRACTOR DAILY. EACH DEVICE IS TO BE MAINTAINED OR REPLACED IF SEDIMENT ACCUMULATION HAS REACHED ONE HALF THE CAPACITY OF THE DEVICE.

4. ALL DIMENSIONS AND GRADES SHOWN ON THE PLANS SHALL BE FIELD VERIFIED BY THE CONTRACTOR PRIOR TO CONSTRUCTION. CONTRACTOR SHALL NOTIFY CONSTRUCTION MANAGER IF ANY DISCREPANCIES EXIST PRIOR TO PROCEEDING WITH CONSTRUCTION FOR NECESSARY PLAN OR GRADE CHANGES. NO EXTRA COMPENSATION SHALL BE PAID TO CONTRACTOR FOR ANY WORK DONE DUE TO DIMENSIONS OR GRADES SHOWN INCORRECTLY ON THESE PLANS IF SUCH NOTIFICATION HAS NOT BEEN GIVEN.

5. UNLESS OTHERWISE NOTED, GRADES AND SPOT ELEVATIONS NOTED ON PLANS INDICATE FINISHED GRADE OR PAVEMENT SURFACE. ALL DIMENSIONS ARE MEASURED TO THE BACK OF CURB UNLESS OTHERWISE INDICATED.

6. ALL AREAS TO BE GRADED SO THAT NO AREAS OF STANDING WATER OCCUR.

FIRE PROTECTION NOTES:

1. FIRE SPRINKLERS WILL BE PROVIDED FOR BUILDING.

2. HYDRANT MUST BE WITHIN 150' OF THE FDC.

3. THE FDC MUST BE WITHIN 40' OF FIRE APPARATUS PLACEMENT.

4. LANDSCAPING OR PARKING CANNOT BLOCK OR IMPEDE THE FDC OR FIRE HYDRANTS. A 3-FOOT CLEAR SPACE SHALL BE MAINTAINED AROUND THE CIRCUMFERENCE OF THE HYDRANT AND FDC.

5. HYDRANTS MUST BE LOCATED WITHIN 8' OF THE CURB.

6. COMBUSTIBLE MATERIALS MAY NOT BE STORED OR ERECTED ONSITE WITHOUT CITY FIRE INSPECTOR APPROVAL.

7. NEW HYDRANTS MUST BE AVAILABLE FOR USE PRIOR TO CONSTRUCTION OF THE BUILDING(S).

8. UNDERGROUND FIRE LINE AND PRIVATE WATER MAINS MUST BE PERMITTED AND INSPECTED BY THE WILMINGTON FIRE DEPARTMENT FROM THE PUBLIC RIGHT-OF-WAY TO THE BUILDING. CONTACT THE WILMINGTON FIRE DEPARTMENT DIVISION OF FIRE AND LIFE SAFETY AT 910-341-0696.

9. A MINIMUM OF 5' SHALL SEPARATE UNDERGROUND FIRE LINES OR PRIVATE WATER MAINS FROM UNDERGROUND UTILITIES

10. CONTRACTOR SHALL MAINTAIN AN ALL WEATHER ACCESS FOR EMERGENCY VEHICLES AT ALL TIMES DURING CONSTRUCTION.

11. ALL WEATHER ACCESS ROAD MUST BE MAINTAINED AROUND CONSTRUCTION SITE AT ALL TIMES.

12. TYPE OF CONSTRUCTION OF BUILDING ACCORDING TO THE INTERNATIONAL BUILDING CODE MUST BE PRESENT ON THE PLANS.

EROSION CONTROL NOTES:

1. CLEAR AND REMOVE FROM SITE ALL TREES, SHRUBS, ROOTS, ROOT MAT, ETC. FROM THE AREA WITHIN DESIGNATED CLEARING LIMITS. DO NOT DISTURB INSIDE TREE PROTECTION FENCING.

2. CONTRACTOR SHALL BE RESPONSIBLE FOR CLEANING AND RESTORING TO PRE-CONSTRUCTION CONDITIONS ANY AREAS OUTSIDE THE PROJECT LIMITS THAT MAY INADVERTENTLY BE DAMAGED DUE TO THE FAILURE OF THE EROSION MEASURES DURING GRADING AND AFTER GRADING HAS BEEN COMPLETED.

3. CONTRACTOR SHALL CONTINUE TO MAINTAIN PERMANENT AND TEMPORARY EROSION CONTROL MEASURES UNTIL FINAL INSPECTION AND APPROVAL BY NEW HANDOVER COUNTY ENGINEERING, IF REQUIRED.

4. PRIOR TO ANY CLEARING, GRADING OR CONSTRUCTION ACTIVITY, TREE PROTECTION FENCING SHALL BE INSTALLED AROUND PROTECTED TREES OR GROVES OF TREES AND NO TOOLS, STOCKPILES, MATERIALS, OR VEHICLES ARE PERMITTED WITHIN THE TREE PROTECTION FENCING.

5. IF THE SAME PERSON CONDUCTS THE LAND-DISTURBING ACTIVITY & ANY RELATED BORROW OR WASTE ACTIVITY, THE RELATED BORROW OR WASTE ACTIVITY SHALL CONSTITUTE PART OF THE LAND-DISTURBING ACTIVITY UNLESS THE BORROW OR WASTE ACTIVITY IS REGULATED UNDER THE MINING ACT OF 1971, OR IS A LANDFILL REGULATED BY THE DIVISION OF WASTE MANAGEMENT. IF THE LAND-DISTURBING ACTIVITY AND ANY RELATED BORROW OR WASTE ACTIVITY ARE NOT CONDUCTED BY THE SAME PERSON, THEY SHALL BE CONSIDERED SEPARATE LAND-DISTURBING ACTIVITIES AND MUST BE PERMITTED EITHER THROUGH THE SEDIMENTATION POLLUTION CONTROL ACT AS A ONE-USE BORROW SITE OR THROUGH THE MINING ACT.

6. CONTACT PERSON SHOULD ISSUES ARISE DURING EROSION AND SEDIMENT CONTROL OPERATION: VERNON POWELL

7. ANY GRADING BEYOND THE DENUDED LIMITS SHOWN ON THE PLAN IS A VIOLATION OF THE COUNTY EROSION CONTROL ORDINANCE AND IS SUBJECT TO A FINE.

8. GRADING MORE THAN ONE ACRE WITHOUT AN APPROVED EROSION CONTROL PLAN IS A VIOLATION OF STATE LAW AND IS SUBJECT TO A FINE.

9. A GROUND COVER MUST BE PROVIDED ON EXPOSED SLOPES WITHIN 15 WORKING DAYS OR 21 CALENDAR DAYS (WHICHEVER IS SHORTER), FOLLOWING COMPLETION OF ANY PHASE OF GRADING; AND, A PERMANENT GROUND COVER FOR ALL DISTURBED AREAS WITHIN 10 WORKING DAYS OR 90 CALENDAR DAYS (WHICHEVER IS SHORTER) FOLLOWING COMPLETION OF CONSTRUCTION OR DEVELOPMENT.

10. ADDITIONAL MEASURES TO CONTROL EROSION AND SEDIMENT MAY BE REQUIRED BY A REPRESENTATIVE OF NEW HANOVER COUNTY.

11. SLOPES SHALL BE GRADED NO STEEPER THAN 3:1.

12. ADDITIONAL DEVICES MAY BE REQUIRED AS AGREED UPON BY THE FIELD INSPECTOR, ENGINEER, AND OWNER.

13. IF ACTIVE CONSTRUCTION CEASES IN ANY AREA FOR MORE THAN 15 WORKING DAYS OR 90 CALENDAR DAYS (WHICHEVER IS SHORTER), ALL DISTURBED AREAS MUST BE SEEDED, MULCHED, AND TACKED UNLESS WRITTEN APPROVAL IS GRANTED BY THE EROSION CONTROL OFFICER.

EROSION CONTROL MAINTENANCE:

1. ALL SEDIMENT AND EROSION CONTROL DEVICES SHALL BE INSPECTED AND REPAIRED, AS NECESSARY, EVERY SEVEN (7) DAYS OR AFTER EACH RAINFALL OCCURRENCE THAT EXCEEDS ONE-HALF (0.5) INCH.

2. ALL EROSION CONTROL DEVICES SHALL BE PROPERLY MAINTAINED DURING ALL PHASES OF CONSTRUCTION UNTIL THE COMPLETION OF ALL CONSTRUCTION ACTIVITIES AND ALL DISTURBED AREAS HAVE BEEN STABILIZED. ADDITIONAL CONTROL DEVICES MAY BE REQUIRED DURING CONSTRUCTION IN ORDER TO CONTROL EROSION AND/OR OFFSITE SEDIMENTATION. ALL TEMPORARY CONTROL DEVICES SHALL BE REMOVED ONCE CONSTRUCTION IS COMPLETE AND THE SITE IS STABILIZED.

3. SEDIMENT SHALL BE REMOVED FROM BEHIND THE SILT FENCE WHEN IT BECOMES ABOUT 0.5 FEET DEEP. THE SEDIMENT FENCE WILL BE REPAIRED OR REPLACED AS NECESSARY TO MAINTAIN A BARRIER.

4. ALL AREAS WILL BE FERTILIZED, RESEEDED AS NECESSARY, AND MULCHED ACCORDING TO SPECIFICATIONS IN THE VEGETATIVE PLAN TO MAINTAIN A VIGOROUS, DENSE VEGETATIVE COVER.

5. STONE CONSTRUCTION ENTRANCE TO BE CLEANED WHEN SEDIMENT ACCUMULATIONS ARE VISIBLE OR SEDIMENT IS TRACKED ON TO THE PAVEMENT. STONE WILL BE PERIODICALLY TOP DRESSED WITH 2 INCHES OF #4 STONE TO MAINTAIN 6 INCH DEPTH. THE CONTRACTOR SHALL DAILY REMOVE MUD/SOIL FROM PAVEMENT, AS REQUIRED.

6. INSPECT TEMPORARY DIVERSIONS AND CHECK DAMS ONCE A WEEK AND AFTER EVERY RAINFALL. IMMEDIATELY REMOVE SEDIMENT FROM THE FLOW AREA AND REPAIR THE DIVERSION RIDGE AND CHECK DAM. CAREFULLY CHECK OUTLETS AND MAKE TIMELY REPAIRS AS NEEDED. WHEN THE AREA PROTECTED IS PERMANENTLY STABILIZED, REMOVE THE RIDGE AND THE CHANNEL TO BLEND WITH THE NATURAL GROUND LEVEL AND APPROPRIATELY STABILIZE IT.

7. INSPECT TEMPORARY SEDIMENT BASINS AT LEAST WEEKLY AND AFTER EACH SIGNIFICANT (1/2" OR GREATER) RAINFALL EVENT AND REPAIR IMMEDIATELY. REMOVE SEDIMENT AND RESTORE THE BASIN TO ITS ORIGINAL DIMENSIONS WHEN IT ACCUMULATES TO ONE-HALF THE DESIGN DEPTH. PLACE REMOVED SEDIMENT IN AN AREA WITH SEDIMENT CONTROLS.

8. CHECK THE SEDIMENT BASIN EMBANKMENT, SPILLWAYS, AND OUTLET FOR EROSION DAMAGE, AND INSPECT THE EMBANKMENT FOR PIPING AND SETTLEMENT. MAKE ALL NECESSARY REPAIRS IMMEDIATELY. REMOVE ALL TRASH AND OTHER DEBRIS FROM THE RISER AND POOL AREA.

EROSION CONTROL MAINTENANCE (CONT'D):

9. INSPECT INLETS AT LEAST WEEKLY AND AFTER EACH SIGNIFICANT (0.5" OR GREATER) RAINFALL EVENT. CLEAR THE MESH WIRE OF ANY DEBRIS OR OTHER OBJECTS TO PROVIDE ADEQUATE FLOW FOR SUBSEQUENT RAINS. TAKE CARE NOT TO DAMAGE OR UNDERCUT THE WIRE MESH DURING SEDIMENT REMOVAL. REPLACE STONE AS NEEDED. INLET PROTECTION SHOULD BE CLEANED OUT WHEN IT IS HALF FULL.

10. INSPECT BAFFLES AT LEAST ONCE A WEEK AND AFTER EACH RAINFALL. MAKE ANY REQUIRED REPAIRS IMMEDIATELY. BE SURE TO MAINTAIN ACCESS TO THE BAFFLES. SHOULD THE FABRIC OF A BAFFLE COLLAPSE, REMOVE SEDIMENT DEPOSITS WHEN IT REACHES HALF FULL TO PROVIDE ADEQUATE STORAGE FOR THE NEXT RAIN AND TO REDUCE PRESSURE ON THE BAFFLES. TAKE CARE TO AVOID DAMAGING THE BAFFLES DURING CLEAN OUT. SEDIMENT DEPTH SHOULD NEVER EXCEED HALF THE DESIGNED STORAGE DEPTH. AFTER THE CONTRIBUTING DRAINAGE AREAS HAVE BEEN PROPERLY STABILIZED, REMOVE ALL BAFFLE MATERIALS AND UNSTABLE SEDIMENT DEPOSITS, BRING THE AREA TO GRADE, AND STABILIZE IT.

11. INSPECT THE SKIMMER FOR CLOGGING. PULL THE SKIMMER TO THE SIDE OF THE BASIN AND REMOVE ANY DEBRIS. ALSO CHECK THE ORIFICE INSIDE THE SKIMMER AND THE ARM OR BARREL PIPE FOR CLOGGING; IF CLOGGED, REMOVE THE DEBRIS.

12. NOTE (G.S. 113A-57 (2)): THE ANGLE FOR GRADED SLOPES AND FILLS SHALL BE NO GREATER THAN THE ANGLE THAT CAN BE RETAINED BY VEGETATIVE COVER OR OTHER ADEQUATE EROSION CONTROL DEVICES OR STRUCTURES. IN ANY EVENT, SLOPES LEFT EXPOSED WILL, WITHIN 21 CALENDAR DAYS OF COMPLETION OF ANY GRADING, BE PLANTED OR OTHERWISE PROVIDED WITH TEMPORARY OR PERMANENT GROUND COVER, DEVICES, OR STRUCTURES SUFFICIENT TO RESTRAIN EROSION.

CITY OF WILMINGTON STANDARD NOTES:

1. CONTACT THE NORTH CAROLINA ONE CALL CENTER PRIOR TO DOING ANY DIGGING AT 1-800-632-4949.

2. ALL PAVEMENT MARKINGS IN PUBLIC RIGHTS-OF-WAY AND FOR DRIVEWAYS ARE TO BE THERMOPLASTIC AND MEET CITY AND/OR NCDOT STANDARDS.

3. IT SHALL BE THE RESPONSIBILITY OF THE SUBDIVIDER TO ERECT OFFICIAL STREET NAME SIGNS AT ALL INTERSECTIONS ASSOCIATED WITH THE SUBDIVISION IN ACCORDANCE WITH THE TECHNICAL STANDARDS AND SPECIFICATIONS MANUAL. THE SUBDIVIDER MAY ACQUIRE AND ERECT OFFICIAL STREET NAME SIGNS OR MAY CHOOSE TO CONTRACT WITH THE CITY TO INSTALL THE STREET SIGNS AND THE SUBDIVIDER SHALL PAY THE COST OF SUCH INSTALLATION. CONTACT TRAFFIC ENGINEERING AT 341-7888 TO DISCUSS INSTALLATION OF TRAFFIC AND STREET NAME SIGNS. PROPOSED STREET NAMES MUST BE APPROVED PRIOR TO INSTALLATION OF STREET NAME SIGNS..

4. TRAFFIC CONTROL DEVICES (INCLUDING SIGNS AND PAVEMENT MARKINGS) IN AREAS OPEN TO PUBLIC TRAFFIC ARE TO MEET MUTCD (MANUAL ON UNIFORM TRAFFIC CONTROL DEVICES) STANDARDS.

5. ANY BROKEN OR MISSING SIDEWALK PANELS, DRIVEWAY PANELS AND CURBING SHALL BE REPLACED BY THE CONTRACTOR.

6. CONTACT TRAFFIC ENGINEERING AT (910) 341-7888 TO DISCUSS STREET LIGHTING OPTIONS.

7. THE NUMBER AND SPACING OF DRIVEWAYS FOR ALL INTERCONNECTED SITES WILL BE DETERMINED BY THE COMBINED FRONTAGE OF THE INTERCONNECTED PROPERTIES.

8. CONTACT TRAFFIC ENGINEERING AT (910) 341-7888 TO ENSURE THAT ALL TRAFFIC SIGNAL FACILITIES AND EQUIPMENT ARE SHOWN ON THE PLAN.

9. CALL TRAFFIC ENGINEERING FORTY-EIGHT HOURS PRIOR TO ANY EXCAVATION IN THE RIGHT-OF-WAY.

10. TRAFFIC ENGINEERING MUST APPROVE OF PAVEMENT MARKING PRIOR TO ACTUAL STRIPING.

11. TACTILE WARNING MATS ARE TO BE INSTALLED ON ALL WHEELCHAIR RAMPS.

12. ALL PARKING STALL MARKINGS AND LANE ARROWS WITHIN THE PARKING AREAS SHALL BE WHITE.

13. ALL TRAFFIC CONTROL SIGNS AND MARKINGS OFF THE RIGHT-OF-WAY ARE TO BE MAINTAINED BY THE PROPERTY OWNER IN ACCORDANCE WITH MUTCD STANDARDS.

14. STOP SIGNS AND STREET SIGNS TO REMAIN IN PLACE DURING CONSTRUCTION.

15. A UTILITY CUT PERMIT IS REQUIRED FOR EACH OPEN CUT OF A CITY STREET.

16. NO OBSTRUCTIONS ARE PERMITTED IN THE SPACE BETWEEN THIRTY (30) INCHES AND TEN (10) FEET ABOVE THE GROUND WITHIN THE TRIANGULAR SIGHT DISTANCE.

TREE PROTECTION NOTES:

1. PRIOR TO ANY CLEARING, GRADING, OR CONSTRUCTION ACTIVITY, TREE PROTECTION FENCING WILL BE INSTALLED AROUND PROTECTED TREES OR GROVES OF TREES. NO CONSTRUCTION WORKERS, TOOLS, MATERIALS OR VEHICLES ARE PERMITTED WITHIN THE TREE PROTECTION FENCING.

2. NO LAND DISTURBANCE, INCLUDING TREE REMOVAL, IS TO OCCUR OUTSIDE THE PROJECT BOUNDARY SHOWN ON THE PLANS, UNLESS OTHERWISE NOTED. TREE PROTECTION FENCING IS SHOWN OUTSIDE OF PROJECT BOUNDARY FOR PROTECTION OF EXISTING TREES IN CLOSE PROXIMITY TO PROPOSED CONSTRUCTION. [18-457(B)]

3. PROTECTIVE FENCING IS TO BE PROPERLY MAINTAINED THROUGHOUT THE DURATION OF THE PROJECT AND CONTRACTOR SHALL RECEIVE ADEQUATE INSTRUCTIONS ON TREE PROTECTION METHODS. [18-458]

4. LAND CLEARING AND CONSTRUCTION CONTRACTORS SHALL RECEIVE ADEQUATE INSTRUCTION ON TREE PROTECTION REQUIREMENTS AND METHODS. [18-457(D)]

5. NO EQUIPMENT IS ALLOWED ON THE SITE UNTIL ALL TREE PROTECTION FENCING AND SILT FENCING HAS BEEN INSTALLED AND APPROVED BY THE LANDSCAPE ARCHITECT. [18-458]

6. ANY TREES AND/OR AREAS DESIGNATED TO BE PROTECTED MUST BE PROPERLY BARRICADED WITH FENCING AND PROTECTED THROUGHOUT CONSTRUCTION TO INSURE THAT NO CLEARING AND GRADING OR STAGING OF MATERIALS WILL OCCUR IN THOSE AREAS. [18-458]

7. REGULATED AND SIGNIFICANT TREES IN THE STREET YARD [18-456(C)] AND ANY TREES IN ANY REQUIRED BUFFERS [18-456(B)] ARE REQUIRED TO BE RETAINED. TREE PROTECTION FENCING SHOWN ON PLANS DELINEATES TREES TO BE RETAINED.

UTILITY NOTES:

1. WATER AND SEWER SERVICE SHALL MEET CAPE FEAR PUBLIC UTILITY AUTHORITY (CFPUA) DETAILS AND SPECIFICATIONS. SCHEDULE A PRE-CONSTRUCTION MEETING WITH CAPE FEAR PUBLIC UTILITY AUTHORITY 48 HOURS PRIOR TO CONSTRUCTION OF WATER AND SEWER LINES.

2. WATER AND SANITARY SEWER UTILITY MAINS ARE PRIVATE BEYOND THE PUBLIC STREET RIGHT-OF-WAY.

3. THIS PROJECT SHALL COMPLY WITH THE CFPUA CROSS CONNECTION CONTROL REQUIREMENTS. WATER METER(S) CANNOT BE RELEASED UNTIL ALL REQUIREMENTS ARE MET AND THE STATE HAS ISSUED THE "FINAL APPROVAL". CALL (910) 343-3910 FOR INFORMATION.

4. ALL COMMERCIAL WATER SERVICES AND ANY IRRIGATION SYSTEMS SUPPLIED BY CFPUA WATER SHALL HAVE A BACKFLOW PREVENTION DEVICE ACCEPTABLE TO CFPUA AND APPROVED BY USCFCCCHR OR ASSE.

5. ANY IRRIGATION SYSTEM SUPPLIED BY CFPUA WATER SHALL COMPLY WITH THE CFPUA CROSS CONNECTION CONTROL REGULATIONS. CALL (910) 343-3910 FOR INFORMATION.

6. ANY IRRIGATION SYSTEM SHALL BE EQUIPPED WITH A RAIN AND FREEZER SENSOR.

7. CONTRACTOR TO FIELD VERIFY EXISTING WATER AND SEWER SERVICE LOCATIONS, SIZES AND MATERIALS PRIOR TO CONSTRUCTION. ENGINEER TO BE NOTIFIED OF ANY CONFLICTS.

8. BACKFLOW PREVENTION AND METERS WILL BE PROVIDED FOR BOTH FIRE LINES (RPDA) AND DOMESTIC SERVICE (RPZ). FIRE LINE BACKFLOW PREVENTER AND DOMESTIC SERVICE BACKFLOW PREVENTER WILL BE LOCATED AS SHOWN ON THE UTILITY PLANS. INSTALLER OF BACKFLOW PREVENTERS MUST CONTACT CFPUA PRIOR TO INSTALLING UNITS TO GIVE CFPUA THE OPTION TO VERIFY INSTALLATION PROCEDURES.

   8.1. REDUCED PRESSURE PRINCIPLE ASSEMBLY FOR DOMESTIC WATER SERVICE
   8.2. REDUCE PRESSURE DETECTOR ASSEMBLY WILL BE UTILIZED FOR THE BACKFLOW PREVENTER ON THE FIRE SERVICE.

9. IF THE CONTRACTOR DESIRES CFPUA WATER FOR CONSTRUCTION HE SHALL APPLY IN ADVANCE FOR THIS SERVICE AND MUST PROVIDE A REDUCED PRESSURE ZONE (RPZ) BACKFLOW PREVENTION DEVICE ON THE DEVELOPER'S SIDE OF THE WATER METER BOX.

10. WATER: 1.5" & 2" PVC MAINS SHALL BE CONSTRUCTED USING ASTM D2241, IPS, GASKETED PIPE, SDR 21. 4"-12" PVC MAINS AND SERVICES SHALL BE CONSTRUCTED USING AWWA C-900 PVC, CL235 (DR-18).

11. SANITARY SEWER: FOR PIPE SIZES 4" AND 6" PIPE SHALL BE SCH 40 CONFORMING TO THE REQUIREMENTS OF ASTM D1785 WITH SOLVENT WELD JOINTS CONFORMING TO ASTM D2672. FOR PIPE SIZES 8" THROUGH 12", PIPE SHALL BE CLASS 150, DR18 CONFORMING TO THE REQUIREMENTS OF AWWA C900 WITH ELASTOMERIC PUSH-ON JOINTS CONFORMING TO ASTM D3212 OR ASTM D3139.

12. WATER AND SEWER SERVICES CANNOT BE ACTIVATED ON NEW MAINS UNTIL ENGINEER'S CERTIFICATION AND AS-BUILTS ARE RECEIVED AND "FINAL APPROVAL" ISSUED BY PUBLIC WATER SUPPLY SECTION OF NCDENR AND "FINAL ENGINEERING CERTIFICATION" ISSUED BY DIVISION OF WATER QUALITY OF NCDENR.

13. PVC WATER MAINS AND POLYETHYLENE SERVICES ARE TO BE MARKED WITH NO. 10 SINGLE STRAND INSULATED COPPER WIRE INSTALLED THE ENTIRE LENGTH AND STRAPPED TO THE PIPES WITH DUCT TAPE. THE INSULATED WIRE IS TO BE STRIPPED TO BARE WIRE AND SECURED TO ALL VALVES. THIS WIRE IS TO BE ACCESSIBLE AT ALL FIRE HYDRANTS AND WATER METER BOXES TO AID IN FUTURE LOCATION OF FACILITIES.

14. SITE UTILITY CONTRACTOR TO PROVIDE WATER AND SANITARY SEWER SERVICE TO WITHIN 5 FEET OF THE BUILDING. CONTRACTOR SHALL COORDINATE SITE PLAN CONNECTIONS WITH THE ARCHITECTURAL BUILDING PLANS.

15. MAXIMUM BENDING RADIUS FOR 8" C-900 PVC WATER MAIN BENDS IS 380' (ONE-HALF MANUFACTURER'S RECOMMENDED ALLOWABLE LONGITUDINAL BENDING).

16. UNDERGROUND UTILITIES: ALL NEW UTILITIES SHALL BE INSTALLED UNDERGROUND, EXCEPT WHERE SUCH PLACEMENT IS PROHIBITED OR DEEMED IMPRACTICAL BY THE UTILITY PROVIDER. UNDERGROUND TERMINAL FACILITIES FOR STREET LIGHTING ALONG THE PUBLIC STREETS ABUTTING THE SUBJECT SITE SHALL BE INSTALLED BY THE DEVELOPER.

17. MINIMUM OF 36" COVERAGE ABOVE ALL WATERMAINS.

18. MINIMUM OF 36" VERTICAL SEPARATION BETWEEN WATERLINES AND STORMDRAIN CURB INLETS.

19. RELATION OF WATER MAINS TO SEWERS:

    LATERAL SEPARATION OF SEWERS AND WATER MAINS: WATER MAINS SHALL BE LAID AT LEAST 10 FEET LATERALLY FROM EXISTING OR PROPOSED SEWERS UNLESS LOCAL CONDITIONS OR BARRIERS PREVENT A 10 FOOT LATERAL SEPARATION, IN WHICH CASE:
    - THE WATER MAIN IS LAID IN A SEPARATE TRENCH, WITH THE ELEVATION OF THE BOTTOM OF THE WATER MAIN AT LEAST 18 INCHES ABOVE THE TOP OF THE SEWER, OR
    - THE WATER MAIN IS LAID IN THE SAME TRENCH AS THE SEWER WITH THE WATER MAIN LOCATED AT ONE SIDE ON A BENCH OF UNDISTURBED EARTH, AND ABOVE THE TOP OF THE SEWER.

    CROSSING A WATER MAIN OVER A SEWER MAIN: WHENEVER IT IS NECESSARY FOR A WATER MAIN TO CROSS OVER A SEWER THE WATER MAIN SHALL BE LAID AT SUCH AN ELEVATION THAT THE BOTTOM OF THE WATER MAIN IS AT LEAST 24 INCHES ABOVE THE TOP OF THE SEWER MAIN. UNLESS LOCAL CONDITIONS OR BARRIERS PREVENT A 24 INCH VERTICAL SEPARATION - IN WHICH CASE BOTH THE WATER MAIN AND THE SEWER MAIN SHALL BE CONSTRUCTED OF FERROUS MATERIALS AND WITH JOINTS THAT ARE EQUIVALENT TO WATER MAIN STANDARDS FOR A DISTANCE OF 10 FEET ON EACH SIDE OF THE POINT OF CROSSING.

    CROSSING A WATER MAIN UNDER A SEWER MAIN: WHENEVER IT IS NECESSARY FOR A WATER MAIN TO CROSS UNDER A SEWER MAIN BOTH THE WATER MAIN AND THE SEWER MAIN SHALL BE CONSTRUCTED OF FERROUS MATERIALS AND WITH JOINTS EQUIVALENT TO WATER MAIN STANDARDS FOR A DISTANCE OF 10 FEET ON EACH SIDE OF THE POINT OF CROSSING.

    CROSSING A SEWER MAIN/WATER MAIN OVER OR UNDER A STORM DRAIN: WHENEVER IT IS NECESSARY FOR A SEWER MAIN/WATER MAIN TO CROSS A STORM DRAIN PIPE, THE SEWER MAIN/WATER MAIN SHALL BE LAID AT SUCH AN ELEVATION THAT THE OUTSIDE OF THE SEWER MAIN/WATER MAIN NEAREST TO THE OUTSIDE OF THE STORM DRAIN PIPE SHALL MAINTAIN A 24 INCH CLEAR SEPARATION DISTANCE HORIZONTAL, OR THE SEWER MAIN/WATER MAIN SHALL EITHER BE CONSTRUCTED OF DUCTILE IRON PIPE OR ENCASED IN EITHER CONCRETE OR DUCTILE IRON PIPE FOR AT LEAST 10 FEET ON EITHER SIDE OF THE CROSSING.

REVISIONS

REV.NO.	DESCRIPTIONS	DATE
I	CITY OF WILMINGTON - EARLY GRADING RELEASE SUBMITTAL	7/21/16
H	PERMIT SUBMITTAL SET - COW, NHC	6/24/16
G	PERMIT SUBMITTAL SET - CFPUA, NCDOT, COW, NHC	5/6/16
F	ADDENDUM #1 - REVISIONS TO UTILITY PLAN	4/7/16
E	CITY OF WILMINGTON STORMWATER AND NHC SEDIMENT AND EROSION CONTROL SUBMITTAL	3/24/16
D	CITY OF WILMINGTON SRB SUBMITTAL	3/4/16
C	CITY OF WILMINGTON TRC SUBMITTAL	2/10/16
B	CITY OF WILMINGTON SRB SUBMITTAL	2/2/16
A	CITY OF WILMINGTON CONCEPT TRC SUBMITTAL	11/5/2015

SEAL

PRELIMINARY PLAN NOT FOR CONSTRUCTION

SEAL

NORTH CAROLINA PROFESSIONAL SEAL 038675 ENGINEER TAMARA C. MURPHY
7/21/16

McKIM&CREED
243 North Front Street
Wilmington, NC 28401
Phone: (910)343-1048, Fax: (910)251-8282
NC LICENSE F-1222
www.mckimcreed.com

SHIPYARD VILLAGE WILMINGTON, LLC
PO BOX 29169
GREENSBORO, NC 27429-9169

SHIPYARD VILLAGE APARTMENTS
2821 CAROLINA BEACH ROAD
WILMINGTON, NORTH CAROLINA
TOWNSHIP OF WILMINGTON

GENERAL NOTES

DATE:	21JUL16
MCE PROJ. #	07010-0001
DRAWN	TCM/TSM
DESIGNED	TCM/TSM
CHECKED	RMC
PROJ. MGR.	TSM

SCALE
HORIZONTAL: N/A
VERTICAL:

M&C FILE NUMBER G-002
DRAWING NUMBER 2

STATUS: PRELIMINARY PLANS NOT FOR CONSTRUCTION
REVISION

N

NC GRID (NAD83)

50' 0 50' 100'

SCALE: 1"=50' (Horiz.)

TREE LEGEND

- = CEDAR
- = DOGWOOD
- = OAK
- = MAGNOLIA
- = MAPLE
- = PINE
- = ELM
- = PALM

NOTES

- TREES SHOWN ARE REGULATED OR SIGNIFICANT (IDENTIFIED WITH AN APPROXIMATE DRIP LINE).
- EXISTING TREE CALIPER IS SHOWN WITHIN THE SYMBOL.

LINETYPE LEGEND

- MAJOR CONTOUR
- MINOR CONTOUR
- RES. PROPERTY LINE
- PROJECT PROPERTY LINE
- DRIVEWAY EASEMENT
- EXISTING R/W
- EXISTING SANITARY SEWER
- EXISTING WATER LINE
- EXISTING BACK OF CURB
- EXISTING STRUCTURE
- EXISTING TREE LINE
- SOIL CLASSIFICATION BOUNDARY

REV.NO.	DESCRIPTIONS	DATE
I	CITY OF WILMINGTON - EARLY GRADING RELEASE SUBMITTAL	7/21/16
H	PERMIT SUBMITTAL SET - CGW, NHC	6/24/16
G	PERMIT SUBMITTAL SET - CFPUA, NCDOT, CGW, NHC	5/6/16
F	ADDENDUM #1 - REVISIONS TO UTILITY PLAN	4/7/16
E	CITY OF WILMINGTON STORMWATER AND NHC SEDIMENT AND EROSION CONTROL SUBMITTAL	3/24/16
D	CITY OF WILMINGTON SRB SUBMITTAL	3/4/16
C	CITY OF WILMINGTON TRC SUBMITTAL	2/10/16
B	CITY OF WILMINGTON SRB SUBMITTAL	2/2/16
A	CITY OF WILMINGTON CONCEPT TRC SUBMITTAL	11/5/2015

REVISIONS

SEAL

PRELIMINARY PLAN NOT FOR CONSTRUCTION

SEAL

NORTH CAROLINA PROFESSIONAL SEAL 038675 ENGINEER TAMARA C. MURPHY

7/21/16

McKIM&CREED

243 North Front Street
Wilmington, NC 28401
Phone: (910)343-1048, Fax: (910)251-8282

NC LICENSE F-1222

www.mckimcreed.com

SHIPYARD VILLAGE WILMINGTON, LLC
PO BOX 29169
GREENSBORO, NC 27429-9169

SHIPYARD VILLAGE APARTMENTS

2821 CAROLINA BEACH ROAD
WILMINGTON, NORTH CAROLINA
TOWNSHIP OF WILMINGTON

TREE REMOVAL PLAN

DATE:	21JUL16
MCE PROJ. #	07010-0001
DRAWN	TCM/TSM
DESIGNED	TCM/TSM
CHECKED	RMC
PROJ. MGR.	TSM

SCALE
HORIZONTAL: 1"=50'
VERTICAL: N/A

M&C FILE NUMBER: CX102
DRAWING NUMBER: 4

STATUS: PRELIMINARY PLANS
NOT FOR CONSTRUCTION
REVISION

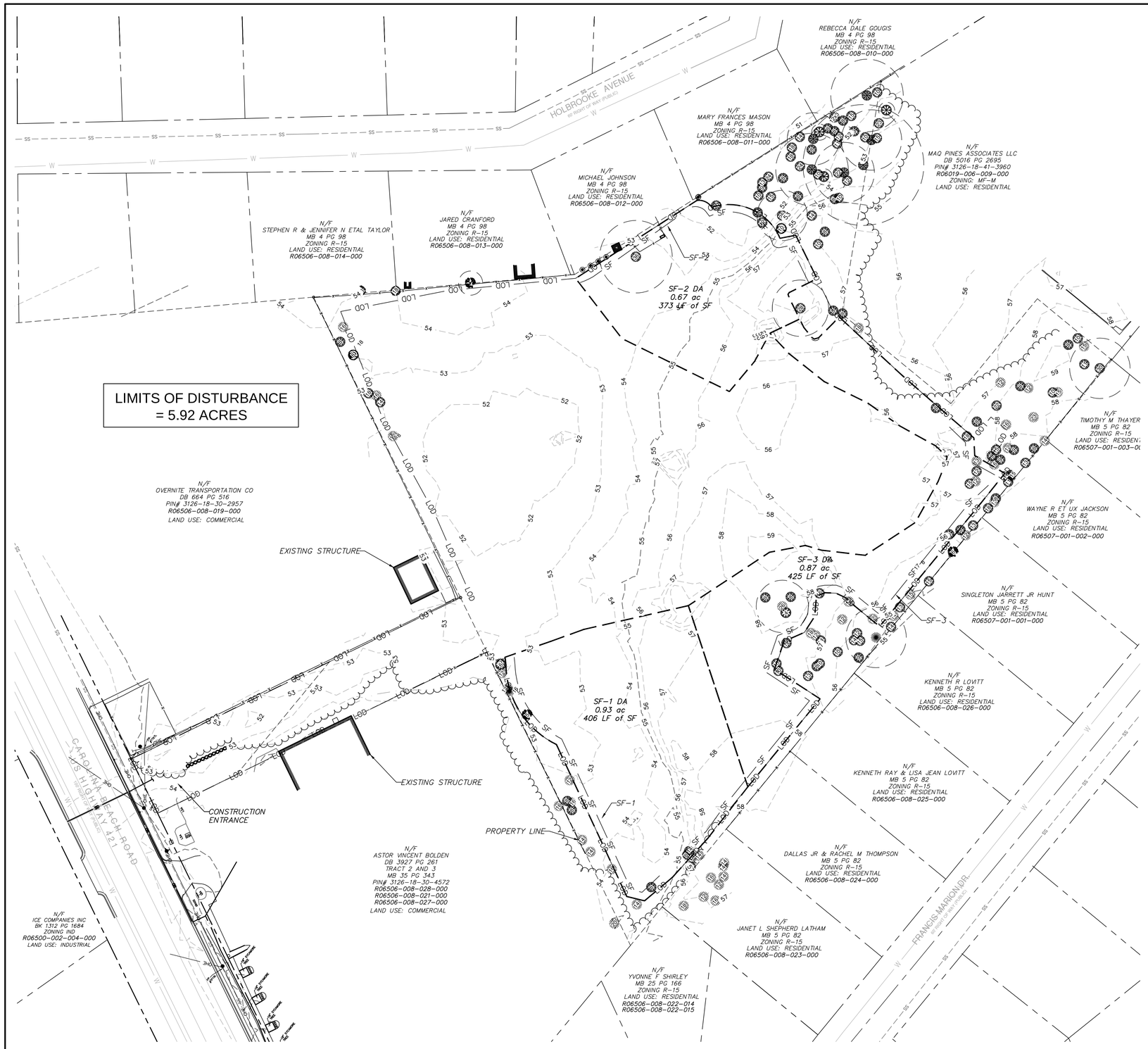

PHASE 1 CONSTRUCTION SEQUENCE:

1. ESTABLISH LIMITS OF DISTURBANCE AS SHOWN.
2. A PRECONSTRUCTION CONFERENCE MUST BE HELD 48 HOURS PRIOR TO THE START OF ANY CONSTRUCTION ACTIVITIES. THE EROSION CONTROL INSPECTOR, ENGINEER, AND CONTRACTOR SHALL BE PRESENT. A DETAILED EROSION CONTROL PHASING PLAN WILL BE FINALIZED PRIOR TO COMMENCEMENT OF WORK.
3. INSTALL TEMPORARY GRAVEL CONSTRUCTION ENTRANCE AS SHOWN. CONTRACTOR SHALL MAINTAIN A SUFFICIENT GRAVEL ENTRANCE UNTIL FINAL SUBGRADE IS ESTABLISHED. IF DIRT/MUD GETS ON THE STREET, THEN A WASH RACK WILL NEED TO BE INSTALLED.
4. INSTALL TREE PROTECTION FENCING AND SILT FENCING AS NOTED ON PLANS BEFORE COMMENCING ANY LAND DISTURBANCE ACTIVITY. ADDITIONAL TREE PROTECTION FENCING AND SILT FENCE MAY BE REQUIRED.
5. COMMENCE CLEARING AND ROUGH GRADING OPERATIONS AND INSTALL EXISTING STORM DRAINAGE INLET PROTECTION.
6. PROVIDE TEMPORARY SEEDING AS NECESSARY TO PREVENT EROSION.

PHASE 2 CONSTRUCTION SEQUENCE:

1. INSTALL PROPOSED STORM DRAINAGE THROUGHOUT PROJECT SITE. ALL STORM DRAINAGE PIPING TO BE CLASS III RCP OR HDPE, UNLESS OTHERWISE NOTED.
2. INSTALL INLET PROTECTION AROUND STORM INLETS.
3. COMPACT ALL FILL AREAS TO 95% STD. PROCTOR MAXIMUM DRY DENSITY.
4. INSTALL UTILITIES, POUR CONCRETE FOR BUILDING PADS. PLACE ASPHALT FOR PARKING AND ROADWAYS.
5. COMPLETE BUILDING CONSTRUCTION AND TIE ROOF DRAINS INTO THE STORM DRAINAGE SYSTEM.
6. INSTALL LANDSCAPING AS SHOWN ON CL-101 & CL-102 AND ESTABLISH FINAL GRADES AS SHOWN ON CG-101 & CG-102.
7. INSTALL PERMANENT SEEDING.
8. REMOVE ALL SEDIMENT FROM ALL STORM DRAIN PIPES. CONTRACTOR TO PERFORM ANY NECESSARY GRADING TO CLEAR TEMPORARY SEDIMENT BASINS OF SEDIMENT AND CONVERT TO PERMANENT INFILTRATION BASINS.
9. SILT FENCE MUST REMAIN INSTALLED AND FUNCTIONING PROPERLY UNTIL THE LIMITS OF CONSTRUCTION HAVE BEEN PERMANENTLY STABILIZED.

SYMBOLS LEGEND

SF	SILT FENCE
LOD	LIMITS OF DISTURBANCE
℄	PROJECT PROPERTY LINE
W	EXISTING WATER LINE
SS	EXISTING SEWER LINE
TP	TREE PROTECTION FENCING
	INLET PROTECTION

EROSION CONTROL NOTES:

1. CLEAR AND REMOVE FROM SITE ALL TREES, SHRUBS, ROOTS, ROOT MAT, ETC. FROM THE AREA WITHIN DESIGNATED CLEARING LIMITS. DO NOT DISTURB INSIDE TREE PROTECTION FENCING.
2. CONTRACTOR SHALL BE RESPONSIBLE FOR CLEANING AND RESTORING TO PRE-CONSTRUCTION CONDITIONS ANY AREAS OUTSIDE THE PROJECT LIMITS THAT MAY INADVERTENTLY BE DAMAGED DUE TO THE FAILURE OF THE EROSION MEASURES DURING GRADING AND AFTER GRADING HAS BEEN COMPLETED.
3. CONTRACTOR SHALL CONTINUE TO MAINTAIN PERMANENT AND TEMPORARY EROSION CONTROL MEASURES UNTIL FINAL INSPECTION AND APPROVAL BY NEW HANOVER COUNTY ENGINEERING, IF REQUIRED.
4. PRIOR TO ANY CLEARING, GRADING OR CONSTRUCTION ACTIVITY, TREE PROTECTION FENCING SHALL BE INSTALLED AROUND PROTECTED TREES OR GROVES OF TREES AND NO TOOLS, STOCKPILES, MATERIALS, OR VEHICLES ARE PERMITTED WITHIN THE TREE PROTECTION FENCING.
5. IF THE SAME PERSON CONDUCTS THE LAND-DISTURBING ACTIVITY & ANY RELATED BORROW OR WASTE ACTIVITY, THE RELATED BORROW OR WASTE ACTIVITY SHALL CONSTITUTE PART OF THE LAND-DISTURBING ACTIVITY UNLESS THE BORROW OR WASTE ACTIVITY IS REGULATED UNDER THE MINING ACT OF 1971, OR IS A LANDFILL REGULATED BY THE DIVISION OF WASTE MANAGEMENT. IF THE LAND-DISTURBING ACTIVITY AND ANY RELATED BORROW OR WASTE ACTIVITY ARE NOT CONDUCTED BY THE SAME PERSON, THEY SHALL BE CONSIDERED SEPARATE LAND-DISTURBING ACTIVITIES AND MUST BE PERMITTED EITHER THROUGH THE SEDIMENTATION POLLUTION CONTROL ACT AS A ONE-USE BORROW SITE OR THROUGH THE MINING ACT.
6. CONTACT PERSON SHOULD ISSUES ARISE DURING EROSION AND SEDIMENT CONTROL OPERATION: VERNON POWELL
7. ANY GRADING BEYOND THE DENUDED LIMITS SHOWN ON THE PLAN IS A VIOLATION OF THE COUNTY EROSION CONTROL ORDINANCE AND IS SUBJECT TO A FINE.
8. GRADING MORE THAN ONE ACRE WITHOUT AN APPROVED EROSION CONTROL PLAN IS A VIOLATION OF STATE LAW AND IS SUBJECT TO A FINE.
9. A GROUND COVER MUST BE PROVIDED ON EXPOSED SLOPES WITHIN 15 WORKING DAYS OR 21 CALENDAR DAYS (WHICHEVER IS SHORTER), FOLLOWING COMPLETION OF ANY PHASE OF GRADING; AND, A PERMANENT GROUND COVER FOR ALL DISTURBED AREAS WITHIN 10 WORKING DAYS OR 90 CALENDAR DAYS (WHICHEVER IS SHORTER) FOLLOWING COMPLETION OF CONSTRUCTION OR DEVELOPMENT.
10. ADDITIONAL MEASURES TO CONTROL EROSION AND SEDIMENT MAY BE REQUIRED BY A REPRESENTATIVE OF NEW HANOVER COUNTY.
11. SLOPES SHALL BE GRADED NO STEEPER THAN 3:1.
12. ADDITIONAL DEVICES MAY BE REQUIRED AS AGREED UPON BY THE FIELD INSPECTOR, ENGINEER, AND OWNER.
13. IF ACTIVE CONSTRUCTION CEASES IN ANY AREA FOR MORE THAN 15 WORKING DAYS OR 90 CALENDAR DAYS (WHICHEVER IS SHORTER), ALL DISTURBED AREAS MUST BE SEEDED, MULCHED, AND TACKED UNLESS WRITTEN APPROVAL IS GRANTED BY THE EROSION CONTROL OFFICER.

EROSION CONTROL MAINTENANCE:

1. ALL EROSION AND SEDIMENT CONTROL MEASURES WILL BE CHECKED FOR STABILITY AND OPERATION FOLLOWING EVERY RUNOFF-PRODUCING RAINFALL, BUT IN NO CASE LESS THAN ONCE EVERY WEEK AND WITHIN 24 HOURS OF EVERY HALF INCH RAINFALL.
2. ALL POINTS OF EGRESS WILL HAVE CONSTRUCTION ENTRANCES/EXITS THAT WILL BE PERIODICALLY TOP-DRESSED WITH 2-3" COARSE STONE TO MAINTAIN 6" THICKNESS. ENTRANCES/EXITS WILL BE MAINTAINED IN A CONDITION TO PREVENT MUD OR SEDIMENT FROM LEAVING THE SITE. IMMEDIATELY REMOVE OBJECTIONABLE MATERIAL SPILLED, WASHED, OR TRACKED ONTO THE CONSTRUCTION ENTRANCE/EXIT OR PUBLIC ROADWAYS. (NCDENR PRACTICE 6.06)
3. SEDIMENT WILL BE REMOVED FROM BEHIND THE SEDIMENT FENCE WHEN IT BECOMES HALF-FILLED. THE SEDIMENT FENCE WILL BE REPAIRED AS NECESSARY TO MAINTAIN A BARRIER. STAKES MUST BE STEEL. STAKE SPACING WILL BE 6 FEET MAX. WITH THE USE OF EXTRA STRENGTH FABRIC, WITHOUT WIRE BACKING. STAKE SPACING WILL BE 8 FEET MAX. WHEN STANDARD STRENGTH FABRIC AND WIRE BACKING ARE USED. IF ROCK FILTERS ARE DESIGNED AT LOW POINTS IN THE SEDIMENT FENCE THE ROCK WILL BE REPAIRED OR REPLACED IF IT BECOMES HALF FULL OF SEDIMENT, NO LONGER DRAINS AS DESIGNED OR IS DAMAGED. (NCDENR PRACTICE 6.62)
4. SEDIMENT WILL BE REMOVED FROM HARDWARE CLOTH AND GRAVEL INLET PROTECTIONS WHEN THE SEDIMENT REACHES HALF OF THE DEPTH TO THE TOP OF THE ROCK. ROCK WILL BE CLEANED OR REPLACED WHEN THE SEDIMENT CONTROL MEASURE NO LONGER DRAINS AS INTENDED. REMOVE DEBRIS FROM THE ROCK AS NECESSARY TO ALLOW FOR PROPER DRAINAGE. (NCDENR PRACTICES 6.51)
5. ALL SEEDED AREAS WILL BE FERTILIZED, RE-SEEDED AS NECESSARY AND MULCHED ACCORDING TO SPECIFICATIONS IN THE VEGETATIVE PLAN TO MAINTAIN A VIGOROUS, DENSE VEGETATIVE COVER. THE ANGLE FOR GRADED SLOPES AND FILLS SHALL BE NO GREATER THAN THE ANGLE THAT CAN BE RETAINED BY VEGETATIVE COVER OR OTHER ADEQUATE EROSION CONTROL DEVICES OR STRUCTURES. IN ANY EVENT, SHORT, FLAT SLOPES (FLATTER THAN 3:1 AND LESS THAN 50') LEFT EXPOSED WILL, WITHIN 14 CALENDAR DAYS OF COMPLETION OF ANY GRADING, BE PLANTED OR OTHERWISE PROVIDED WITH TEMPORARY OR PERMANENT GROUND COVER, DEVISES, OR STRUCTURES SUFFICIENT TO RESTRAIN EROSION. ALL OTHER AREAS SHOULD BE STABILIZED WITHIN 7 DAYS AFTER ANY PHASE OF ACTIVITY.
6. SEDIMENT WILL BE REMOVED FROM SEDIMENT BASINS WHEN THE DESIGNED STORAGE CAPACITY HAS BEEN HALF-FILLED WITH SEDIMENT. PULL SKIMMER TO ONE SIDE SO THAT SEDIMENT UNDERNEATH CAN BE REMOVED. SKIMMERS MUST BE CHECKED FOR BLOCKAGES AND DEBRIS REMOVAL, AND MAY BE FLUSHED IF NECESSARY. BAFFLES WILL BE REPAIRED OR REPLACED IF THEY COLLAPSE, TEAR, DECOMPOSE, OR BECOME INEFFECTIVE. THEY WILL BE REPLACED PROMPTLY. SEDIMENT WILL BE REMOVED WHEN DEPOSITS REACH HALF THE HEIGHT OF THE FIRST BAFFLE. (NCDENR PRACTICES 6.60, 6.64, & 6.65)
7. SEDIMENT STORAGE BAGS SHALL BE REMOVED ONCE 1/2-CAPACITY IS REACHED. SEDIMENT BAGS SHALL BE DISPOSED OF PROPERLY IN A LANDFILL OR BROKEN ON-SITE FOR BACKFILL. BAGS SHALL BE LIFTED CAREFULLY ACCORDING TO MANUFACTURER'S RECOMMENDATIONS SO THAT BAGS ARE NOT TORN IN-PLACE AND SEDIMENT IS NOT RELEASED OFF-SITE OR DOWNSTREAM.

REV.NO.	DESCRIPTIONS	DATE
I	CITY OF WILMINGTON - EARLY GRADING RELEASE SUBMITTAL	7/21/16
H	PERMIT SUBMITTAL SET - CGW, NHC	6/24/16
G	PERMIT SUBMITTAL SET - CPPUA, NCDOT, CGW, NHC	5/6/16
F	ADDENDUM #1 - REVISIONS TO UTILITY PLAN	4/7/16
E	CITY OF WILMINGTON STORMWATER AND NHC SEDIMENT AND EROSION CONTROL SUBMITTAL	3/24/16
D	CITY OF WILMINGTON SRB SUBMITTAL	3/4/16
C	CITY OF WILMINGTON TRC SUBMITTAL	2/10/16
B	CITY OF WILMINGTON SRB SUBMITTAL	2/2/16
A	CITY OF WILMINGTON CONCEPT TRC SUBMITTAL	11/5/2015

REVISIONS

SEAL

PRELIMINARY PLAN
NOT FOR
CONSTRUCTION

SEAL

NORTH CAROLINA PROFESSIONAL SEAL 038675 ENGINEER TAMARA C. MURPHY
7/21/16

McKIM&CREED
243 North Front Street
Wilmington, NC 28401
Phone: (910)343-1048, Fax: (910)251-8282
NC LICENSE F-1222
www.mckimcreed.com

SHIPYARD VILLAGE WILMINGTON, LLC
PO BOX 29169
GREENSBORO, NC 27429-9169

SHIPYARD VILLAGE APARTMENTS
2821 CAROLINA BEACH ROAD
WILMINGTON, NORTH CAROLINA
TOWNSHIP OF WILMINGTON

SEDIMENT AND EROSION
CONTROL PLAN - PHASE 1

DATE:	21JUL16
MCE PROJ. #	07010-0001
DRAWN	TCM/TSM
DESIGNED	TCM/TSM
CHECKED	RMC
PROJ. MGR.	TSM

SCALE
HORIZONTAL: 1"=50'
VERTICAL: N/A

M&C FILE NUMBER: CE101
DRAWING NUMBER: 5

STATUS: PRELIMINARY PLANS
NOT FOR CONSTRUCTION
REVISION

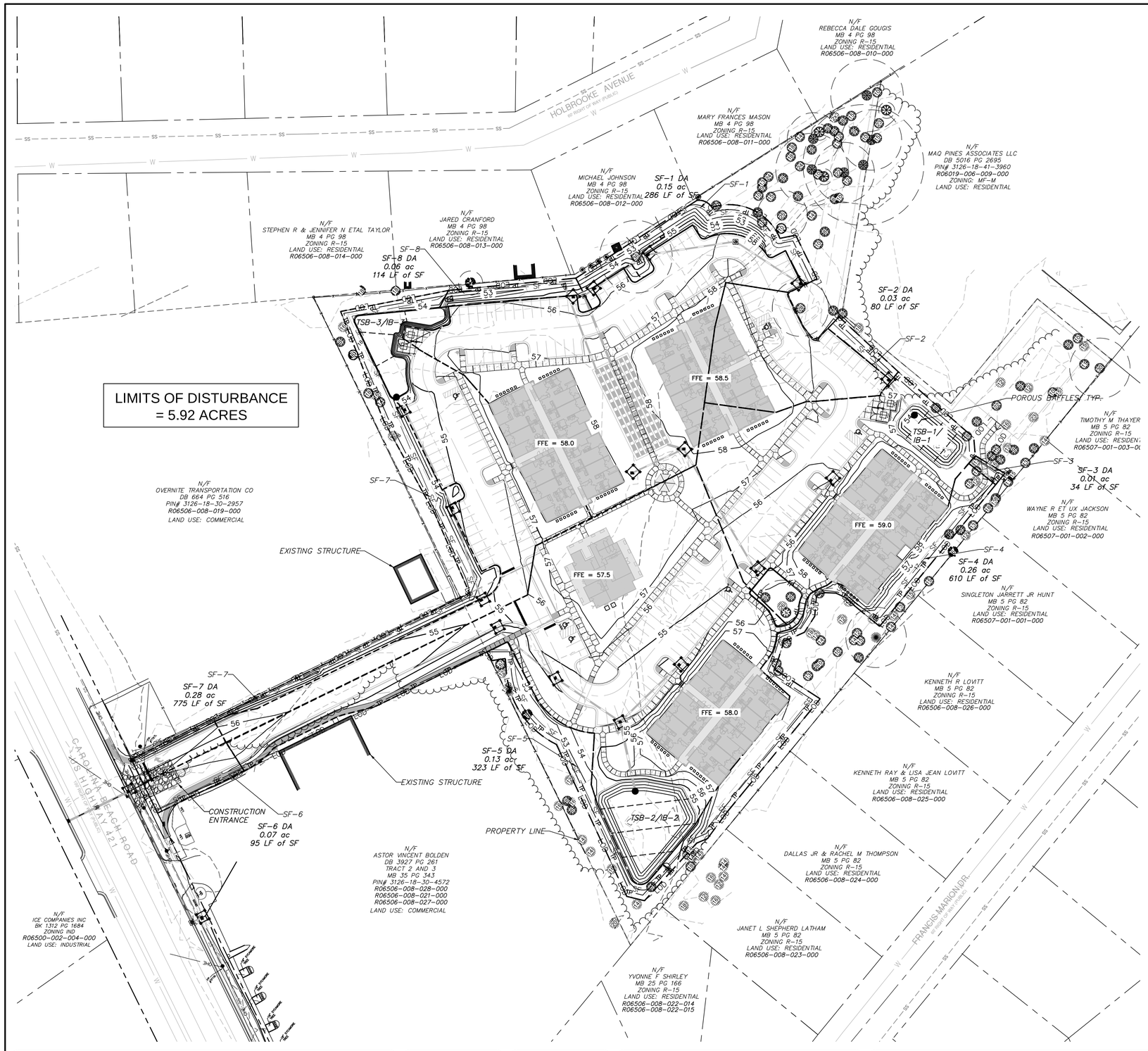

PHASE 1 CONSTRUCTION SEQUENCE:

1. ESTABLISH LIMITS OF DISTURBANCE AS SHOWN.
2. A PRECONSTRUCTION CONFERENCE MUST BE HELD 48 HOURS PRIOR TO THE START OF ANY CONSTRUCTION ACTIVITIES. THE EROSION CONTROL INSPECTOR, ENGINEER, AND CONTRACTOR SHALL BE PRESENT. A DETAILED EROSION CONTROL PHASING PLAN WILL BE FINALIZED PRIOR TO COMMENCEMENT OF WORK.
3. INSTALL TEMPORARY GRAVEL CONSTRUCTION ENTRANCE AS SHOWN. CONTRACTOR SHALL MAINTAIN A SUFFICIENT GRAVEL ENTRANCE UNTIL FINAL SUBGRADE IS ESTABLISHED. IF DIRT/MUD GETS ON THE STREET, THEN A WASH RACK WILL NEED TO BE INSTALLED.
4. INSTALL TREE PROTECTION FENCING AND SILT FENCING AS NOTED ON PLANS BEFORE COMMENCING ANY LAND DISTURBANCE ACTIVITY. ADDITIONAL TREE PROTECTION FENCING AND SILT FENCE MAY BE REQUIRED.
5. COMMENCE CLEARING AND ROUGH GRADING OPERATIONS AND INSTALL EXISTING STORM DRAINAGE INLET PROTECTION.
6. PROVIDE TEMPORARY SEEDING AS NECESSARY TO PREVENT EROSION.

PHASE 2 CONSTRUCTION SEQUENCE:

1. INSTALL PROPOSED STORM DRAINAGE THROUGHOUT PROJECT SITE. ALL STORM DRAINAGE PIPING TO BE CLASS III RCP OR HDPE, UNLESS OTHERWISE NOTED.
2. INSTALL INLET PROTECTION AROUND STORM INLETS.
3. COMPACT ALL FILL AREAS TO 95% STD. PROCTOR MAXIMUM DRY DENSITY.
4. INSTALL UTILITIES, POUR CONCRETE FOR BUILDING PADS. PLACE ASPHALT FOR PARKING AND ROADWAYS.
5. COMPLETE BUILDING CONSTRUCTION AND TIE ROOF DRAINS INTO THE STORM DRAINAGE SYSTEM.
6. INSTALL LANDSCAPING AS SHOWN ON CL-101 & CL-102 AND ESTABLISH FINAL GRADES AS SHOWN ON CG-101 & CG-102.
7. INSTALL PERMANENT SEEDING.
8. REMOVE ALL SEDIMENT FROM ALL STORM DRAIN PIPES. CONTRACTOR TO PERFORM ANY NECESSARY GRADING TO CLEAR TEMPORARY SEDIMENT BASINS OF SEDIMENT AND CONVERT TO PERMANENT INFILTRATION BASINS.
9. SILT FENCE MUST REMAIN INSTALLED AND FUNCTIONING PROPERLY UNTIL THE LIMITS OF CONSTRUCTION HAVE BEEN PERMANENTLY STABILIZED.

SYMBOLS LEGEND

SF	SILT FENCE
LOD	LIMITS OF DISTURBANCE
℄	PROJECT PROPERTY LINE
W	EXISTING WATER LINE
SS	EXISTING SEWER LINE
TP	TREE PROTECTION FENCING
	INLET PROTECTION

NOTE: SEE SHEET CE-501 FOR SEDIMENT AND EROSION CONTROL DETAILS.

EROSION CONTROL NOTES:

1. CLEAR AND REMOVE FROM SITE ALL TREES, SHRUBS, ROOTS, ROOT MAT, ETC. FROM THE AREA WITHIN DESIGNATED CLEARING LIMITS. DO NOT DISTURB INSIDE TREE PROTECTION FENCING.
2. CONTRACTOR SHALL BE RESPONSIBLE FOR CLEANING AND RESTORING TO PRE-CONSTRUCTION CONDITIONS ANY AREAS OUTSIDE THE PROJECT LIMITS THAT MAY INADVERTENTLY BE DAMAGED DUE TO THE FAILURE OF THE EROSION MEASURES DURING GRADING AND AFTER GRADING HAS BEEN COMPLETED.
3. CONTRACTOR SHALL CONTINUE TO MAINTAIN PERMANENT AND TEMPORARY EROSION CONTROL MEASURES UNTIL FINAL INSPECTION AND APPROVAL BY NEW HANOVER COUNTY ENGINEERING, IF REQUIRED.
4. PRIOR TO ANY CLEARING, GRADING OR CONSTRUCTION ACTIVITY, TREE PROTECTION FENCING SHALL BE INSTALLED AROUND PROTECTED TREES OR GROVES OF TREES AND NO TOOLS, STOCKPILES, MATERIALS, OR VEHICLES ARE PERMITTED WITHIN THE TREE PROTECTION FENCING.
5. IF THE SAME PERSON CONDUCTS THE LAND-DISTURBING ACTIVITY & ANY RELATED BORROW OR WASTE ACTIVITY, THE RELATED BORROW OR WASTE ACTIVITY SHALL CONSTITUTE PART OF THE LAND-DISTURBING ACTIVITY UNLESS THE BORROW OR WASTE ACTIVITY IS REGULATED UNDER THE MINING ACT OF 1971, OR IS A LANDFILL REGULATED BY THE DIVISION OF WASTE MANAGEMENT. IF THE LAND-DISTURBING ACTIVITY AND ANY RELATED BORROW OR WASTE ACTIVITY ARE NOT CONDUCTED BY THE SAME PERSON, THEY SHALL BE CONSIDERED SEPARATE LAND-DISTURBING ACTIVITIES AND MUST BE PERMITTED EITHER THROUGH THE SEDIMENTATION POLLUTION CONTROL ACT AS A ONE-USE BORROW SITE OR THROUGH THE MINING ACT.
6. CONTACT PERSON SHOULD ISSUES ARISE DURING EROSION AND SEDIMENT CONTROL OPERATION: VERNON POWELL
7. ANY GRADING BEYOND THE DENUDED LIMITS SHOWN ON THE PLAN IS A VIOLATION OF THE COUNTY EROSION CONTROL ORDINANCE AND IS SUBJECT TO A FINE.
8. GRADING MORE THAN ONE ACRE WITHOUT AN APPROVED EROSION CONTROL PLAN IS A VIOLATION OF STATE LAW AND IS SUBJECT TO A FINE.
9. A GROUND COVER MUST BE PROVIDED ON EXPOSED SLOPES WITHIN 15 WORKING DAYS OR 21 CALENDAR DAYS (WHICHEVER IS SHORTER), FOLLOWING COMPLETION OF ANY PHASE OF GRADING; AND, A PERMANENT GROUND COVER FOR ALL DISTURBED AREAS WITHIN 10 WORKING DAYS OR 90 CALENDAR DAYS (WHICHEVER IS SHORTER) FOLLOWING COMPLETION OF CONSTRUCTION OR DEVELOPMENT.
10. ADDITIONAL MEASURES TO CONTROL EROSION AND SEDIMENT MAY BE REQUIRED BY A REPRESENTATIVE OF NEW HANOVER COUNTY.
11. SLOPES SHALL BE GRADED NO STEEPER THAN 3:1.
12. ADDITIONAL DEVICES MAY BE REQUIRED AS AGREED UPON BY THE FIELD INSPECTOR, ENGINEER, AND OWNER.
13. IF ACTIVE CONSTRUCTION CEASES IN ANY AREA FOR MORE THAN 15 WORKING DAYS OR 90 CALENDAR DAYS (WHICHEVER IS SHORTER), ALL DISTURBED AREAS MUST BE SEEDED, MULCHED, AND TACKED UNLESS WRITTEN APPROVAL IS GRANTED BY THE EROSION CONTROL OFFICER.

EROSION CONTROL MAINTENANCE:

1. ALL EROSION AND SEDIMENT CONTROL MEASURES WILL BE CHECKED FOR STABILITY AND OPERATION FOLLOWING EVERY RUNOFF-PRODUCING RAINFALL, BUT IN NO CASE LESS THAN ONCE EVERY WEEK AND WITHIN 24 HOURS OF EVERY HALF INCH RAINFALL.
2. ALL POINTS OF EGRESS WILL HAVE CONSTRUCTION ENTRANCES/EXITS THAT WILL BE PERIODICALLY TOP-DRESSED WITH 2-3" COARSE STONE TO MAINTAIN 6" THICKNESS. ENTRANCES/EXITS WILL BE MAINTAINED IN A CONDITION TO PREVENT MUD OR SEDIMENT FROM LEAVING THE SITE. IMMEDIATELY REMOVE OBJECTIONABLE MATERIAL SPILLED, WASHED, OR TRACKED ONTO THE CONSTRUCTION ENTRANCE/EXIT OR PUBLIC ROADWAYS. (NCDENR PRACTICE 6.06)
3. SEDIMENT WILL BE REMOVED FROM BEHIND THE SEDIMENT FENCE WHEN IT BECOMES HALF-FILLED. THE SEDIMENT FENCE WILL BE REPAIRED AS NECESSARY TO MAINTAIN A BARRIER. STAKES MUST BE STEEL. STAKE SPACING WILL BE 6 FEET MAX. WITH THE USE OF EXTRA STRENGTH FABRIC, WITHOUT WIRE BACKING. STAKE SPACING WILL BE 8 FEET MAX. WHEN STANDARD STRENGTH FABRIC AND WIRE BACKING ARE USED. IF ROCK FILTERS ARE DESIGNED AT LOW POINTS IN THE SEDIMENT FENCE THE ROCK WILL BE REPAIRED OR REPLACED IF IT BECOMES HALF FULL OF SEDIMENT, NO LONGER DRAINS AS DESIGNED OR IS DAMAGED. (NCDENR PRACTICE 6.62)
4. SEDIMENT WILL BE REMOVED FROM HARDWARE CLOTH AND GRAVEL INLET PROTECTIONS WHEN THE SEDIMENT REACHES HALF OF THE DEPTH TO THE TOP OF THE ROCK. ROCK WILL BE CLEANED OR REPLACED WHEN THE SEDIMENT CONTROL MEASURE NO LONGER DRAINS AS INTENDED. REMOVE DEBRIS FROM THE ROCK AS NECESSARY TO ALLOW FOR PROPER DRAINAGE. (NCDENR PRACTICES 6.51)
5. ALL SEEDED AREAS WILL BE FERTILIZED, RE-SEEDED AS NECESSARY AND MULCHED ACCORDING TO SPECIFICATIONS IN THE VEGETATIVE PLAN TO MAINTAIN A VIGOROUS, DENSE VEGETATIVE COVER. THE ANGLE FOR GRADED SLOPES AND FILLS SHALL BE NO GREATER THAN THE ANGLE THAT CAN BE RETAINED BY VEGETATIVE COVER OR OTHER ADEQUATE EROSION CONTROL DEVICES OR STRUCTURES. IN ANY EVENT, SHORT, FLAT SLOPES (FLATTER THAN 3:1 AND LESS THAN 50') LEFT EXPOSED WILL, WITHIN 14 CALENDAR DAYS OF COMPLETION OF ANY GRADING, BE PLANTED OR OTHERWISE PROVIDED WITH TEMPORARY OR PERMANENT GROUND COVER, DEVISES, OR STRUCTURES SUFFICIENT TO RESTRAIN EROSION. ALL OTHER AREAS SHOULD BE STABILIZED WITHIN 7 DAYS AFTER ANY PHASE OF ACTIVITY.
6. SEDIMENT WILL BE REMOVED FROM SEDIMENT BASINS WHEN THE DESIGNED STORAGE CAPACITY HAS BEEN HALF-FILLED WITH SEDIMENT. PULL SKIMMER TO ONE SIDE SO THAT SEDIMENT UNDERNEATH CAN BE REMOVED. SKIMMERS MUST BE CHECKED FOR BLOCKAGES AND DEBRIS REMOVAL, AND MAY BE FLUSHED IF NECESSARY. BAFFLES WILL BE REPAIRED OR REPLACED IF THEY COLLAPSE, TEAR, DECOMPOSE, OR BECOME INEFFECTIVE. THEY WILL BE REPLACED PROMPTLY. SEDIMENT WILL BE REMOVED WHEN DEPOSITS REACH HALF THE HEIGHT OF THE FIRST BAFFLE. (NCDENR PRACTICES 6.60, 6.64, & 6.65)
7. SEDIMENT STORAGE BAGS SHALL BE REMOVED ONCE 1/2-CAPACITY IS REACHED. SEDIMENT BAGS SHALL BE DISPOSED OF PROPERLY IN A LANDFILL OR BROKEN ON-SITE FOR BACKFILL. BAGS SHALL BE LIFTED CAREFULLY ACCORDING TO MANUFACTURER'S RECOMMENDATIONS SO THAT BAGS ARE NOT TORN IN-PLACE AND SEDIMENT IS NOT RELEASED OFF-SITE OR DOWNSTREAM.

REV.NO.	DESCRIPTIONS	DATE
I	CITY OF WILMINGTON - EARLY GRADING RELEASE SUBMITTAL	7/21/16
H	PERMIT SUBMITTAL SET - CDW, NHC	6/24/16
G	PERMIT SUBMITTAL SET - CPPUA, NCDOT, CDW, NHC	5/6/16
F	ADDENDUM #1 - REVISIONS TO UTILITY PLAN	4/7/16
E	CITY OF WILMINGTON STORMWATER AND NHC SEDIMENT AND EROSION CONTROL SUBMITTAL	3/24/16
D	CITY OF WILMINGTON SRB SUBMITTAL	3/4/16
C	CITY OF WILMINGTON TRC SUBMITTAL	2/10/16
B	CITY OF WILMINGTON SRB SUBMITTAL	2/2/16
A	CITY OF WILMINGTON CONCEPT TRC SUBMITTAL	11/5/2015

REVISIONS

SEAL

PRELIMINARY PLAN
NOT FOR
CONSTRUCTION

SEAL

NORTH CAROLINA PROFESSIONAL SEAL 038675 ENGINEER TAMARA C. MURPHY
7/21/16

McKIM&CREED
243 North Front Street
Wilmington, NC 28401
Phone: (910)343-1048, Fax: (910)251-8282
NC LICENSE F-1222
www.mckimcreed.com

SHIPYARD VILLAGE WILMINGTON, LLC
PO BOX 29169
GREENSBORO, NC 27429-9169

SHIPYARD VILLAGE APARTMENTS
2821 CAROLINA BEACH ROAD
WILMINGTON, NORTH CAROLINA
TOWNSHIP OF WILMINGTON

SEDIMENT AND EROSION
CONTROL - PHASE 2

DATE:	21JUL16
MCE PROJ. #	07010-0001
DRAWN	TCM/TSM
DESIGNED	TCM/TSM
CHECKED	RMC
PROJ. MGR.	TSM

SCALE
HORIZONTAL: 1"=50'
VERTICAL: N/A

M&C FILE NUMBER CE102
DRAWING NUMBER 6

STATUS: PRELIMINARY PLANS
NOT FOR CONSTRUCTION
REVISION

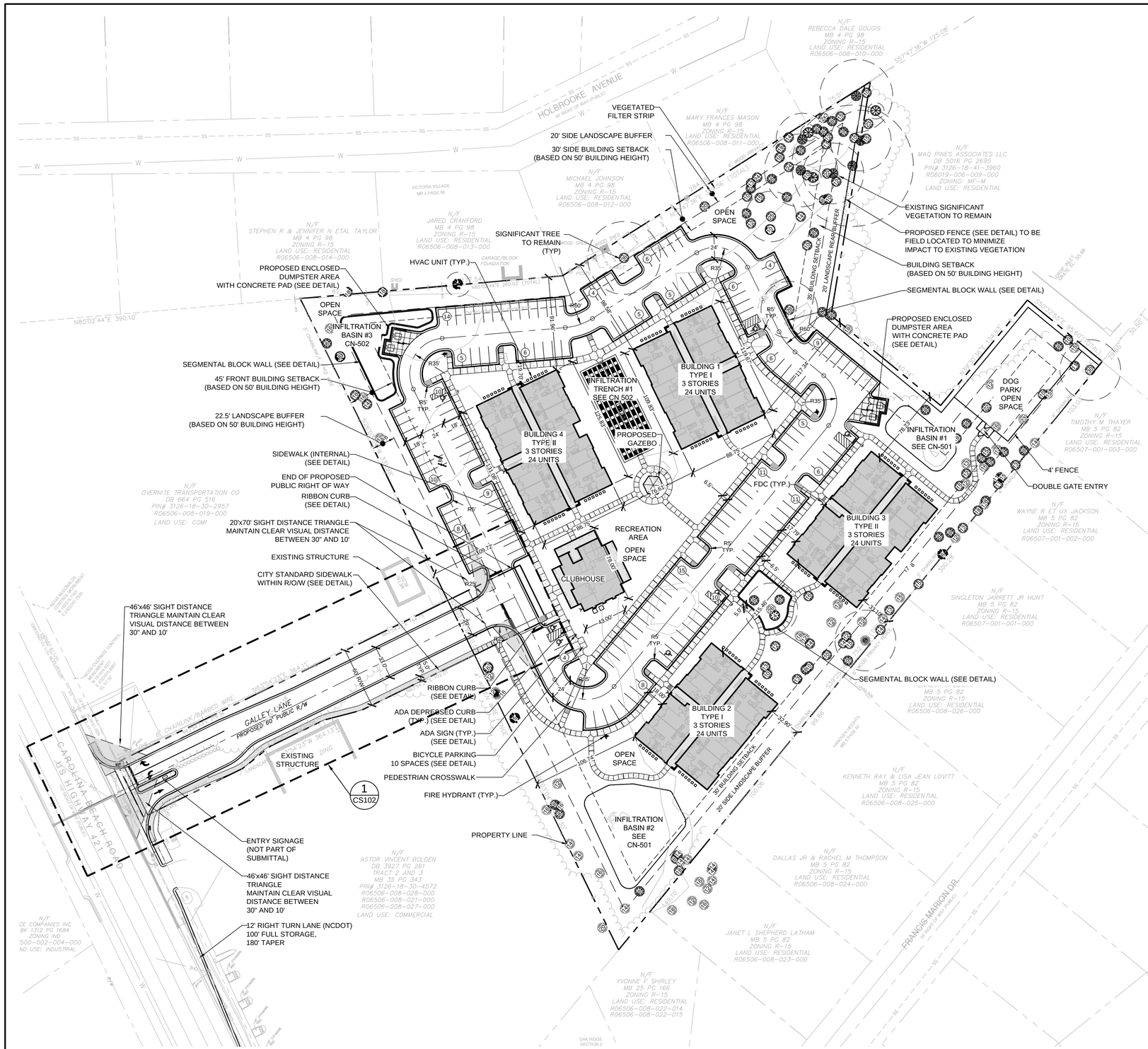

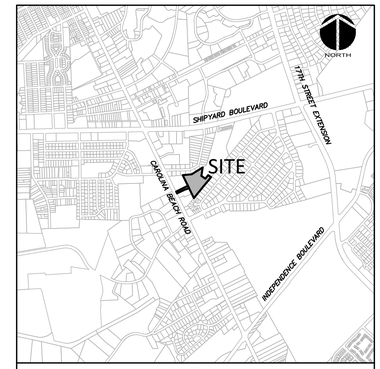

VICINITY MAP
SCALE: 1" = 2000'

GENERAL NOTES:

1. PROJECT IS NOT WITHIN ANY SPECIAL HIGHWAY OVERLAY DISTRICT.
2. PROJECT IS NOT WITHIN ANY CORRIDOR OVERLAY DISTRICT.
3. NO WETLANDS HAVE BEEN IDENTIFIED ON SITE.
4. CONTACT THE NORTH CAROLINA ONE CALL CENTER PRIOR TO DOING ANY DIGGING. 1-800-632-4949.
5. THE AT&T CONTACT IS JAMES BATSON - HE IS THE BUILDING INDUSTRY CONSULTANT - (910) 392-8712. PLEASE CONTACT HIM PRIOR TO STARTING THE PROJECT IN ORDER TO FACILITATE GOOD COMMUNICATION AND MAXIMUM FLEXIBILITY.
6. THE PROCESS FOR TELEPHONE CABLE PLACEMENT:
   - FINAL GRADE WILL NEED TO BE ESTABLISHED.
   - POWER WILL PLACE THEIR CABLE FIRST AT APPROXIMATELY 3 FT DEEP.
   - BELLSOUTH/CABLE TV WILL THEN PLACE THEIR CABLE AT APPROXIMATELY 2 FEET DEEP.
7. SITE DIMENSIONS FOR PARKING AREAS ARE TO THE FACE OF CURB.
8. ALL PROPOSED VEGETATION WITHIN SIGHT DISTANCE TRIANGLES SHALL NOT INTERFERE WITH CLEAR VISUAL SIGHT LINES FROM 30" TO 10'.
9. SEE SHEET 4 (CS-102) FOR TYPICAL HANDICAP SPACE DIMENSION INFORMATION.
10. NO FEMA 100-YEAR FLOODPLAIN HAS BEEN IDENTIFIED ON SITE.

N

NC GRID (NAD83)

50' 0 50' 100'

SCALE: 1"=50' (Horiz.)

SITE DATA TABLE	SHIPYARD VILLAGE	
PARCEL ADDRESS	2821 CAROLINA BEACH ROAD	
BUILDING SETBACKS	REQUIRED	PROPOSED
FRONT	35'	35'
REAR	25'	25'
SIDE (INTERIOR)	20'	20'
SIDE (CORNER)	30'	30'
TAX PARCEL IDENTIFICATION NUMBER(S):	R06506-008-020-000	
	R06506-008-029-000	
	R06506-008-032-000	
PARCEL DEED BOOK AND PAGE NUMBER(S)	DB 5387 PG 329	
	DB 5813 PG 1822	
CURRENT ZONING:	MF-M (17 DU/AC) AND CS	
TOTAL ACREAGE	7.19 ACRES (313,133 SF)	
AREA OF PROPOSED PUBLIC RIGHT OF WAY	0.61 ACRES (26,604 SF)	
REMAINING SITE	6.58 ACRES (286,529 SF)	
MAX DENSITY ALLOWED	111 UNITS	
DENSITY PROPOSED	96 UNITS	
BUILDING SIZE WITH SQUARE FOOTAGE	45,506 GROSS SF	
(2) BUILDING TYPE 1	10,082 SF (EACH)	
(2) BUILDING TYPE 2	11,061 SF (EACH)	
CLUBHOUSE	3,220 SF	
NC BUILDING CODE CONSTRUCTION TYPE	VB	
BUILDING LOT COVERAGE	14.49%	
PROPOSED BUILDING HEIGHT	50' (BLDG. TYPE 1 & 2) CLUBHOUSE	15'
NUMBER OF STORIES & SQUARE FEET PER FLOOR	3 STORIES, SF VARIES	
TOTAL AMOUNT OF DISTURBED AREA	6.60 ACRES (287,613 SF)	
CAMA LAND USE CLASSIFICATION	URBAN	
EXISTING IMPERVIOUS AREA	0	
IMPERVIOUS AREA (PROPOSED)		
BUILDINGS	46,207	SF
ROADWAYS AND PARKING	79,998	SF
SIDEWALKS	20,095	SF
OFF-SITE IMPERVIOUS (WITHIN CAROLINA BEACH ROAD PUBLIC R/W)	4,210	SF
TOTAL S.F. (ONSITE IMPERVIOUS AREA)	146,300	SF
PERCENTAGE (ONSITE IMPERVIOUS AREA/ONSITE AREA)	46.7	%
PARKING CALCULATIONS		
PROPOSED USE:	MULTI-FAMILY	
SPACES PROVIDED	179	
MAXIMUM SPACES ALLOWED (2.5 PER UNIT)	240	
MINIMUM SPACES REQUIRED	177	
36 1 BEDROOM UNITS @ 1.5 SPACES PER UNIT	54 SPACES	
48 2 BEDROOM UNITS @ 2.0 SPACES PER UNIT	96 SPACES	
12 3 BEDROOM UNITS @ 2.25 SPACES PER UNIT	27 SPACES	
ACCESSIBLE SPACES REQUIRED	6 (1 VAN)	
ACCESSIBLE SPACES PROVIDED	6 (1 VAN)	
BICYCLE PARKING SPACES REQUIRED	10	
BICYCLE PARKING SPACES PROVIDED	10	
OPEN SPACE CALCULATIONS		
TOTAL OPEN SPACE REQUIRED (35% OF SITE, EXCLUDING PUBLIC RIGHT OF WAY)	2.30 ACRES (100,285 SF)	
OPEN SPACE PROVIDED	2.58 ACRES (112,385 SF)	
REQUIRED ACTIVE OPEN SPACE (17.5% OF SITE, EXCLUDING PUBLIC RIGHT OF WAY)	1.15 ACRES (50,142.5 SF)	
PROPOSED ACTIVE OPEN SPACE	1.20 ACRES (52,272 SF)	
REQUIRED PASSIVE OPEN SPACE (17.5% OF SITE, EXCLUDING PUBLIC RIGHT OF WAY)	1.15 ACRES (50,142.5 SF)	
PROPOSED PASSIVE OPEN SPACE	1.38 ACRES (60,113 SF)	

REV.NO.	DESCRIPTIONS	DATE
I	CITY OF WILMINGTON - EARLY GRADING RELEASE SUBMITTAL	7/21/16
H	PERMIT SUBMITTAL SET - COW, NHC	6/24/16
G	PERMIT SUBMITTAL SET - CPPUA, NCDOT, COW, NHC	5/6/16
F	ADDENDUM #1 - REVISIONS TO UTILITY PLAN	4/7/16
E	CITY OF WILMINGTON STORMWATER AND NHC SEDIMENT AND EROSION CONTROL SUBMITTAL	3/24/16
D	CITY OF WILMINGTON SRB SUBMITTAL	3/4/16
C	CITY OF WILMINGTON TRC SUBMITTAL	2/10/16
B	CITY OF WILMINGTON SRB SUBMITTAL	2/2/16
A	CITY OF WILMINGTON CONCEPT TRC SUBMITTAL	11/5/2015

REVISIONS

SEAL

PRELIMINARY PLAN NOT FOR CONSTRUCTION

SEAL

NORTH CAROLINA PROFESSIONAL SEAL 038675 ENGINEER TAMARA C. MURPHY

7/21/16

McKIM&CREED
243 North Front Street
Wilmington, NC 28401
Phone: (910)343-1048, Fax: (910)251-8282
NC LICENSE F-1222
www.mckimcreed.com

SHIPYARD VILLAGE WILMINGTON, LLC
PO BOX 29169
GREENSBORO, NC 27429-9169

SHIPYARD VILLAGE APARTMENTS
2821 CAROLINA BEACH ROAD
WILMINGTON, NORTH CAROLINA
TOWNSHIP OF WILMINGTON

OVERALL SITE PLAN

DATE:	21JUL16
MCE PROJ. #	07010-0001
DRAWN	TCM/TSM
DESIGNED	TCM/TSM
CHECKED	RMC
PROJ. MGR.	TSM

SCALE
HORIZONTAL: 1"=50'
VERTICAL: N/A

M&C FILE NUMBER
CS101
DRAWING NUMBER
7

STATUS: PRELIMINARY PLANS NOT FOR CONSTRUCTION
REVISION

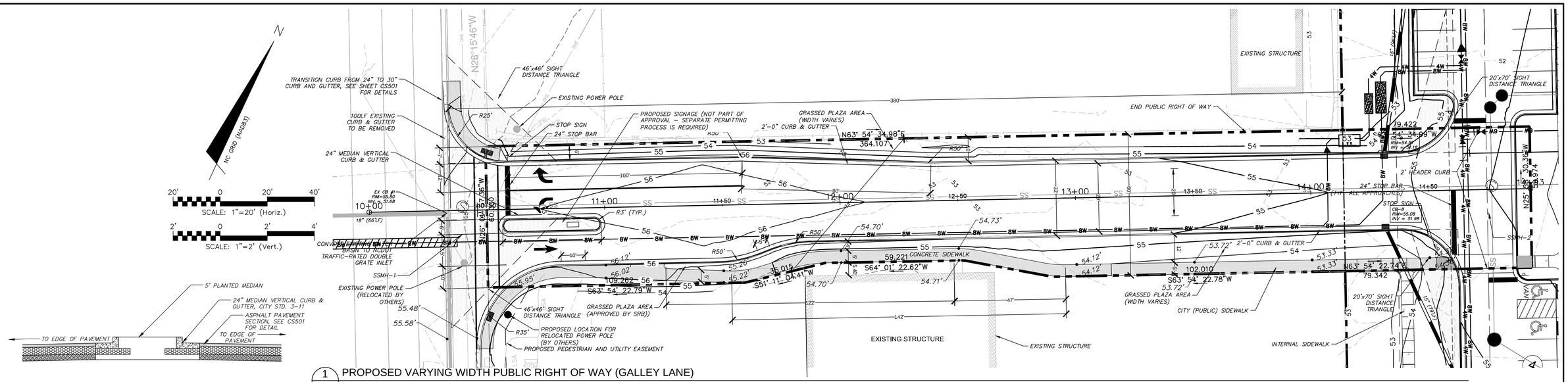

1 CS102 PROPOSED VARYING WIDTH PUBLIC RIGHT OF WAY (GALLEY LANE)

SCALE: 1"=20'

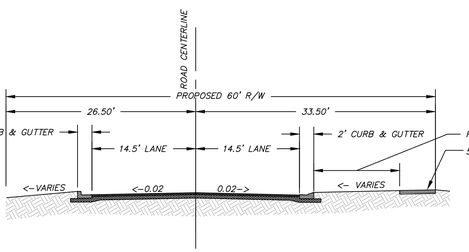

CONCRETE TRAFFIC ISLAND DETAIL

SCALE: N.T.S.

GALLEY LANE CROSS SECTION

60' PROPOSED PUBLIC RIGHT OF WAY

SCALE: 1" =10'

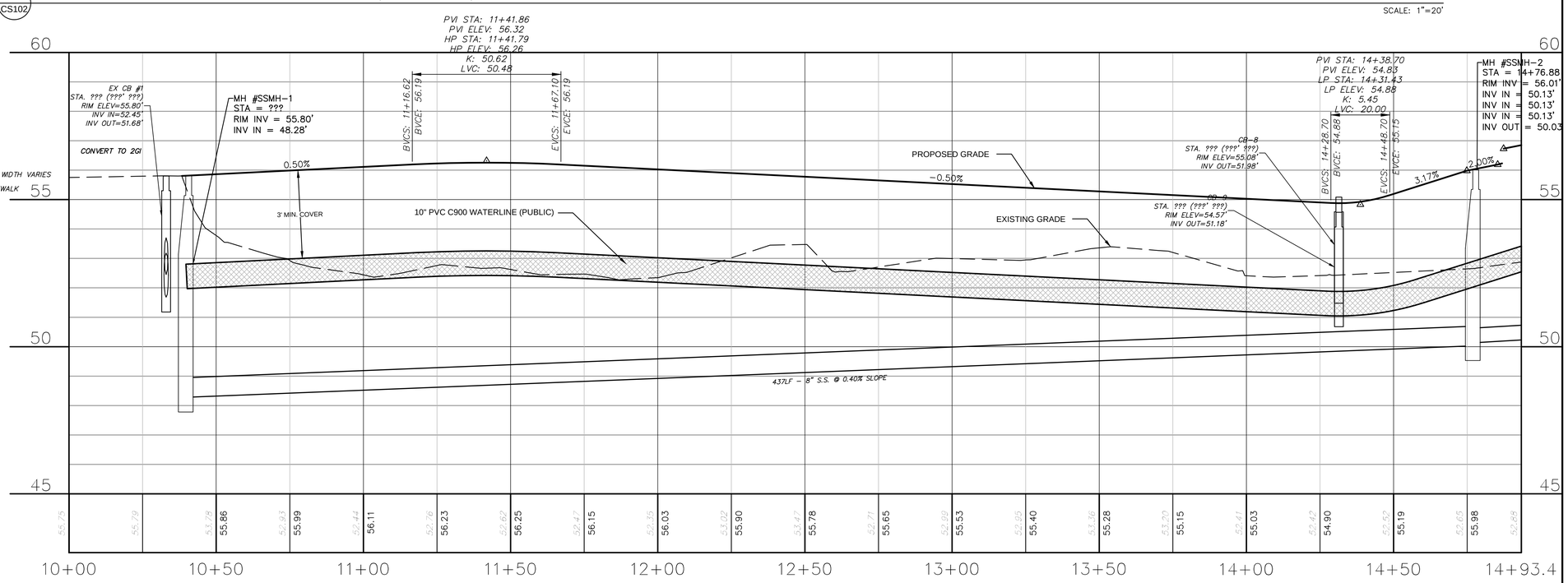

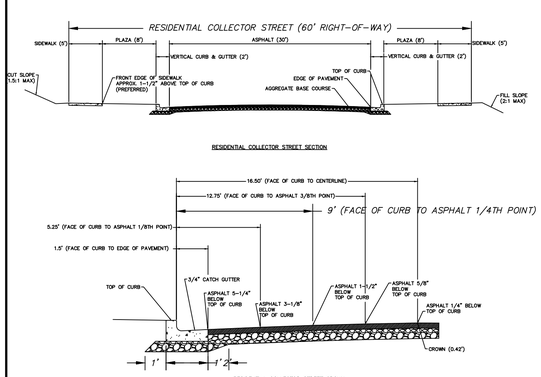

2 CS102 COW STANDARD STREET SECTION (SD 3-01.2)

NOT TO SCALE

GALLEY LANE

PROPOSED 60' PUBLIC RIGHT OF WAY

HORIZ. SCALE: 1"=20'

VERT. SCALE: 1"=2'

NOTE: SEE CS501 FOR ASPHALT PAVEMENT SECTION.

REV.NO.	DESCRIPTIONS	DATE
I	CITY OF WILMINGTON - EARLY GRADING RELEASE SUBMITTAL	7/21/16
H	PERMIT SUBMITTAL SET - COW, NHC	6/24/16
G	PERMIT SUBMITTAL SET - CFPUA, NCDOT, COW, NHC	5/6/16
F	ADDENDUM #1 - REVISIONS TO UTILITY PLAN	4/7/16
E	CITY OF WILMINGTON STORMWATER AND NHC SEDIMENT AND EROSION CONTROL SUBMITTAL	3/24/16
D	CITY OF WILMINGTON SRB SUBMITTAL	3/4/16
C	CITY OF WILMINGTON TRC SUBMITTAL	2/10/16
B	CITY OF WILMINGTON SRB SUBMITTAL	2/2/16
A	CITY OF WILMINGTON CONCEPT TRC SUBMITTAL	11/5/2015

REVISIONS

SEAL

PRELIMINARY PLAN NOT FOR CONSTRUCTION

SEAL

NORTH CAROLINA PROFESSIONAL SEAL 038675 ENGINEER TAMARA C. MURPHY 7/21/16

McKIM&CREED
243 North Front Street
Wilmington, NC 28401
Phone: (910)343-1048, Fax: (910)251-8282
NC LICENSE F-1222
www.mckimcreed.com

SHIPYARD VILLAGE WILMINGTON, LLC
PO BOX 29169
GREENSBORO, NC 27429-9169

SHIPYARD VILLAGE APARTMENTS
2821 CAROLINA BEACH ROAD
WILMINGTON, NORTH CAROLINA
TOWNSHIP OF WILMINGTON

SITE PLAN ENLARGEMENT
GALLEY LANE

DATE:	21JUL16
MCE PROJ. #	07010-0001
DRAWN	TCM/TSM
DESIGNED	TCM/TSM
CHECKED	RMC
PROJ. MGR.	TSM

SCALE
HORIZONTAL: 1"=20'
VERTICAL: N/A

M&C FILE NUMBER CS102

DRAWING NUMBER 8

STATUS: PRELIMINARY PLANS
NOT FOR CONSTRUCTION

REVISION

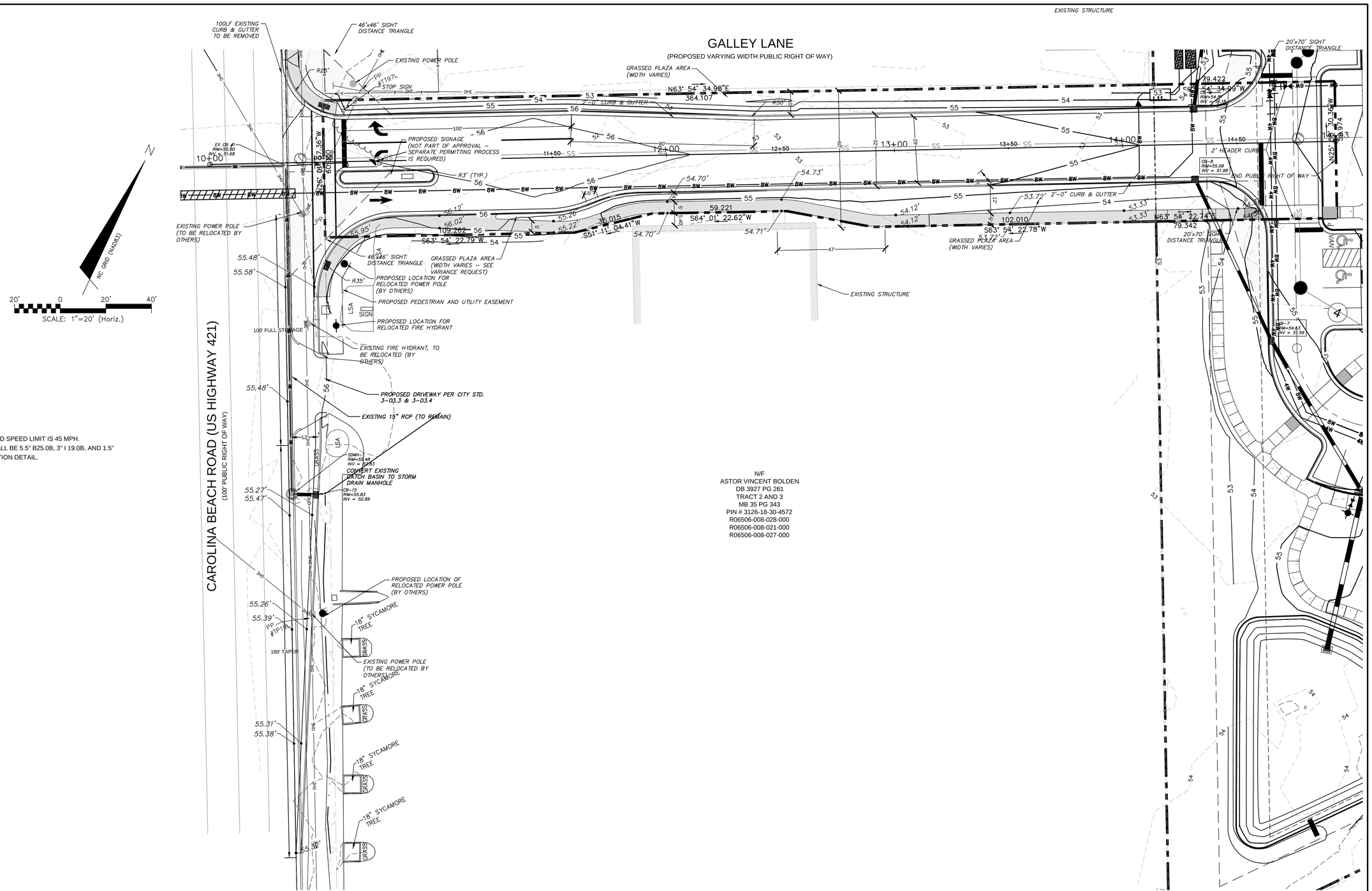

NOTES:

1. CAROLINA BEACH ROAD CURRENT POSTED SPEED LIMIT IS 45 MPH.
2. PAVEMENT SECTION FOR TURN LANE SHALL BE 5.5" B25.0B, 3" I 19.0B, AND 1.5" SF9.5A. SEE CS-504 FOR PAVEMENT SECTION DETAIL.

1 / CS102 CAROLINA BEACH ROAD TURN LANE PLAN

SCALE: 1"=20'

REV.NO.	DESCRIPTIONS	DATE
I	CITY OF WILMINGTON - EARLY GRADING RELEASE SUBMITTAL	7/21/16
H	PERMIT SUBMITTAL SET - COW, NHC	6/24/16
G	PERMIT SUBMITTAL SET - CPPUA, NCDOT, COW, NHC	5/6/16
F	ADDENDUM #1 - REVISIONS TO UTILITY PLAN	4/7/16
E	CITY OF WILMINGTON STORMWATER AND NHC SEDIMENT AND EROSION CONTROL SUBMITTAL	3/24/16
D	CITY OF WILMINGTON SRB SUBMITTAL	3/4/16
C	CITY OF WILMINGTON TRC SUBMITTAL	2/10/16
B	CITY OF WILMINGTON SRB SUBMITTAL	2/2/16
A	CITY OF WILMINGTON CONCEPT TRC SUBMITTAL	11/5/2015

REVISIONS

SEAL

PRELIMINARY PLAN NOT FOR CONSTRUCTION

SEAL

NORTH CAROLINA PROFESSIONAL SEAL 038675 ENGINEER TAMARA C. MURPHY

7/21/16

McKIM&CREED
243 North Front Street
Wilmington, NC 28401
Phone: (910)343-1048, Fax: (910)251-8282
NC LICENSE F-1222
www.mckimcreed.com

SHIPYARD VILLAGE WILMINGTON, LLC
PO BOX 29169
GREENSBORO, NC 27429-9169

SHIPYARD VILLAGE APARTMENTS
2821 CAROLINA BEACH ROAD
WILMINGTON, NORTH CAROLINA
TOWNSHIP OF WILMINGTON

CAROLINA BEACH ROAD (US HIGHWAY 421) TURN LANE PLAN

DATE:	21JUL16
MCE PROJ. #	07010-0001
DRAWN	TCM/TSM
DESIGNED	TCM/TSM
CHECKED	RMC
PROJ. MGR.	TSM

SCALE
HORIZONTAL: 1"=20'
VERTICAL: N/A

M&C FILE NUMBER: CS102A
DRAWING NUMBER: 9

STATUS: PRELIMINARY PLANS
NOT FOR CONSTRUCTION
REVISION

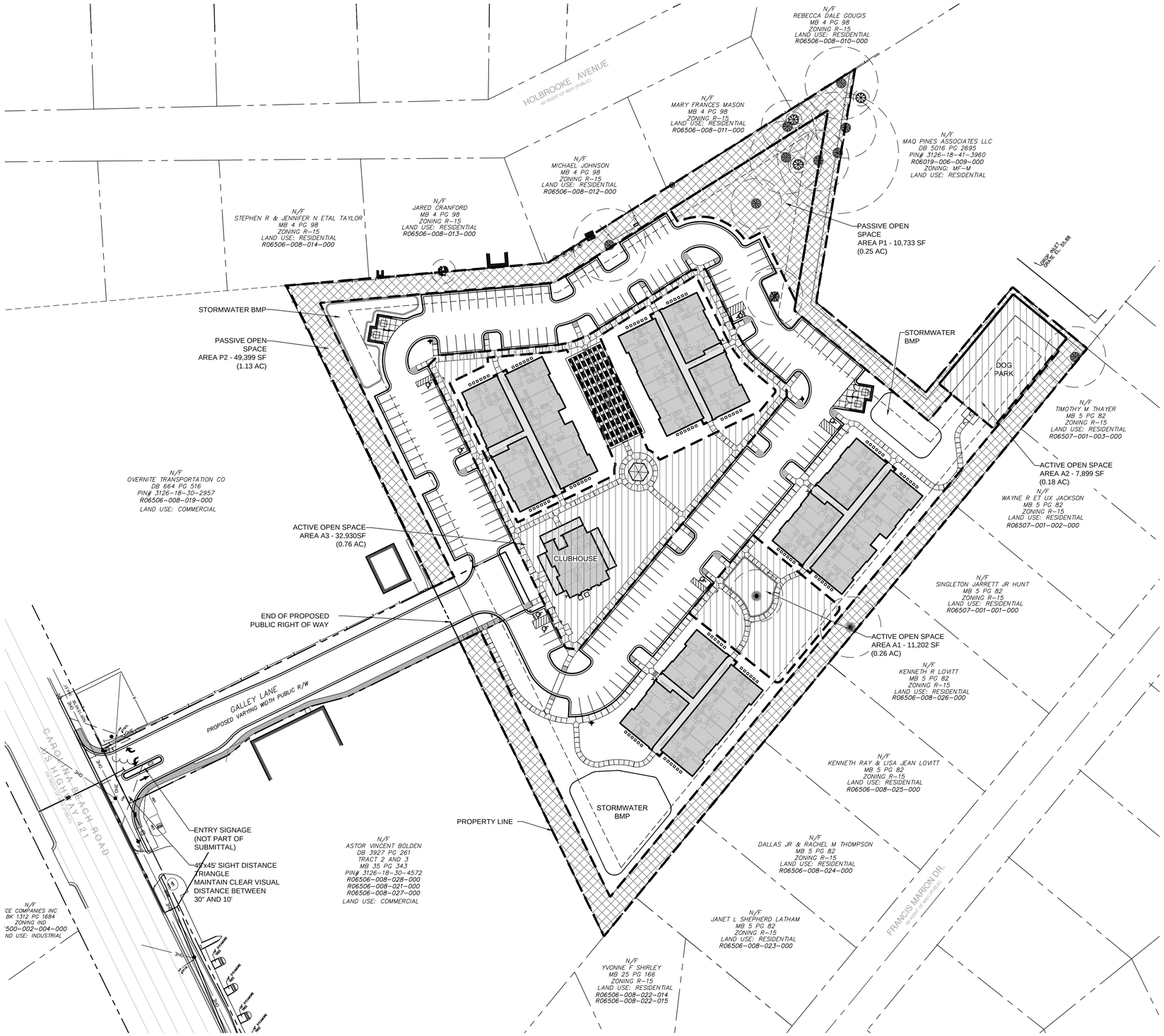

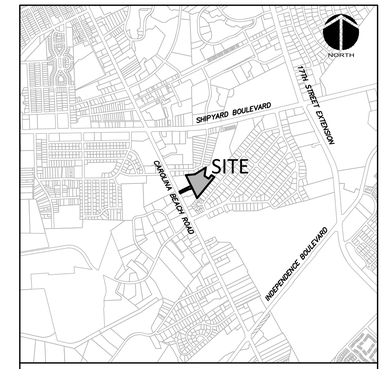

VICINITY MAP
SCALE: 1" = 2000'

OPEN SPACE CALCULATIONS

TRACT AREA	313,133	SF
TOTAL PROPOSED STORMWATER PONDS	12,205	SF
AREA OF PROPOSED PUBLIC RIGHT OF WAY	21,847	SF
GROSS TRACT AREA (TRACT AREA - SW PONDS)	279,081	SF
REQUIRED OPEN SPACE (35% OF TRACT AREA)	97,678	SF
PROPOSED ACTIVE SPACE	52,272	SF
PROPOSED PASSIVE SPACE	60,113	SF
TOTAL OPEN SPACE (ACTIVE + PASSIVE) PROVIDED	112,385	SF (35.9%)

LEGEND

ACTIVE SPACE

PASSIVE SPACE

N

NC GRID (NAD83)

50' 0 50' 100'

SCALE: 1"=50' (Horiz.)

REV.NO.	DESCRIPTIONS	DATE
I	CITY OF WILMINGTON - EARLY GRADING RELEASE SUBMITTAL	7/21/16
H	PERMIT SUBMITTAL SET - COW, NHC	6/24/16
G	PERMIT SUBMITTAL SET - CPPUA, NCDOT, COW, NHC	5/6/16
F	ADDENDUM #1 - REVISIONS TO UTILITY PLAN	4/7/16
E	CITY OF WILMINGTON STORMWATER AND NHC SEDIMENT AND EROSION CONTROL SUBMITTAL	3/24/16
D	CITY OF WILMINGTON SRB SUBMITTAL	3/4/16
C	CITY OF WILMINGTON TRC SUBMITTAL	2/10/16
B	CITY OF WILMINGTON SRB SUBMITTAL	2/2/16
A	CITY OF WILMINGTON CONCEPT TRC SUBMITTAL	11/5/2015

REVISIONS

SEAL

PRELIMINARY PLAN
NOT FOR
CONSTRUCTION

SEAL

NORTH CAROLINA PROFESSIONAL SEAL 038675 ENGINEER TAMARA C. MURPHY

7/21/16

McKIM&CREED
243 North Front Street
Wilmington, NC 28401
Phone: (910)343-1048, Fax: (910)251-8282
NC LICENSE F-1222
www.mckimcreed.com

SHIPYARD VILLAGE WILMINGTON, LLC
PO BOX 29169
GREENSBORO, NC 27429-9169

SHIPYARD VILLAGE APARTMENTS
2821 CAROLINA BEACH ROAD
WILMINGTON, NORTH CAROLINA
TOWNSHIP OF WILMINGTON

OPEN SPACE PLAN

DATE:	21JUL16
MCE PROJ. #	07010-0001
DRAWN	TCM/TSM
DESIGNED	TCM/TSM
CHECKED	RMC
PROJ. MGR.	TSM

SCALE
HORIZONTAL: 1"=50'
VERTICAL: N/A

M&C FILE NUMBER: CS103
DRAWING NUMBER: 10

STATUS: PRELIMINARY PLANS
NOT FOR CONSTRUCTION
REVISION

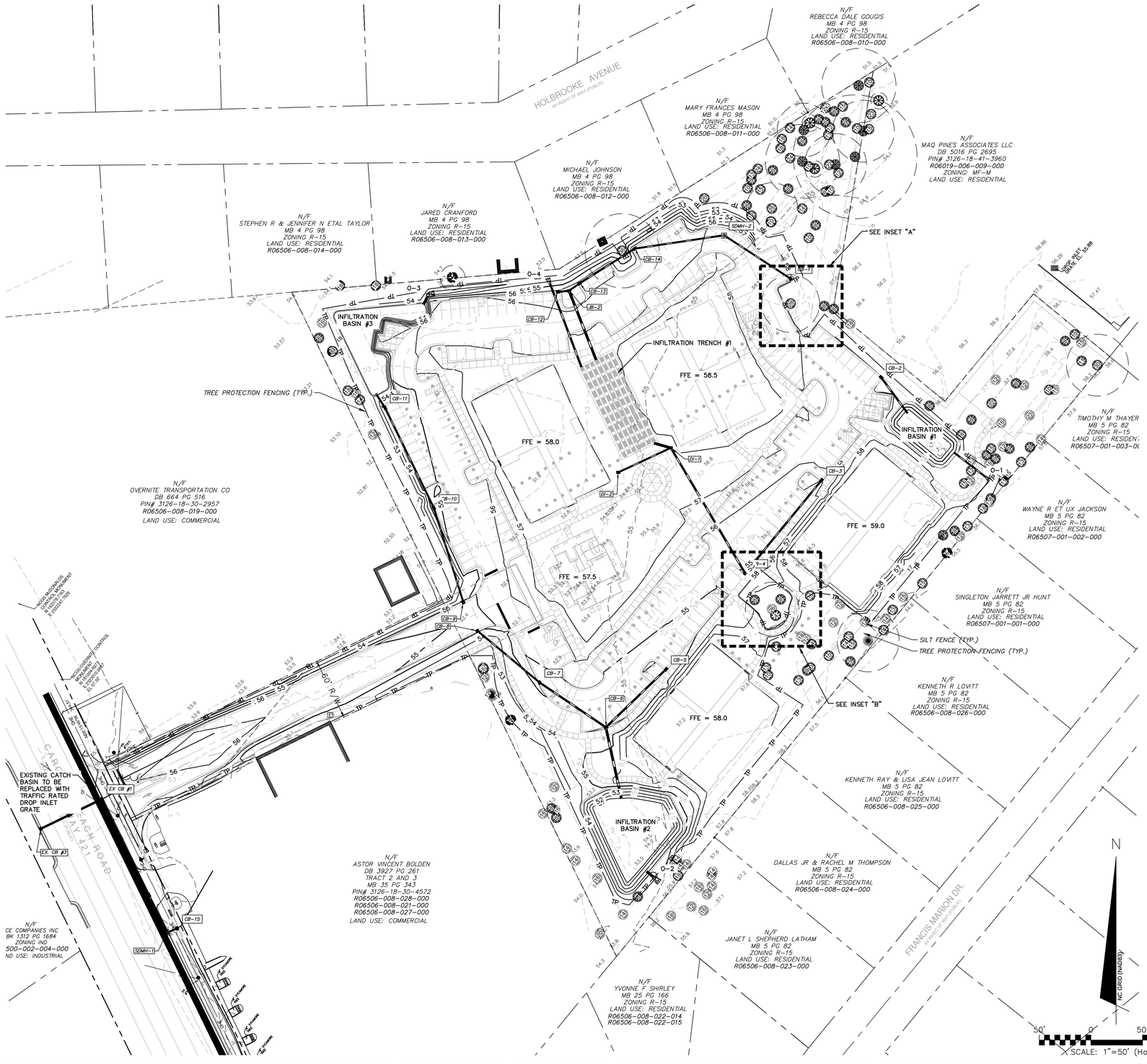

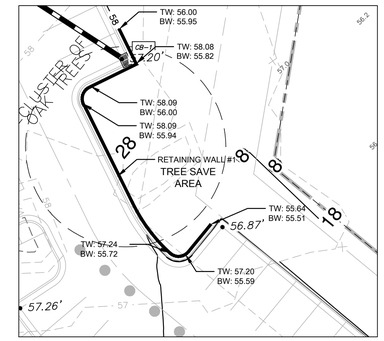

INSET "A"
SCALE: 1" = 20'

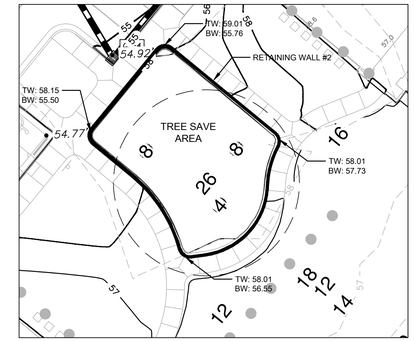

INSET "B"
SCALE: 1" = 20'

Storm Drainage Structure Data Table	
Structure Name	Details
CB-1	RIM = 56.12 INV OUT = 51.94
CB-2	RIM = 56.5 INV OUT = 54.12
CB-3	RIM = 55.49 INV OUT = 50.92
CB-4	RIM = 54.91 INV IN = 50.57 INV OUT = 50.57
CB-5	RIM = 54.31 INV OUT = 51.62
CB-6	RIM = 53.97 INV IN = 51.21 INV IN = 51.21 INV OUT = 51.21
CB-7	RIM = 54.63 INV IN = 51.59 INV OUT = 51.59
CB-8	RIM = 54.57 INV OUT = 51.98
CB-9	RIM = 54.59 INV OUT = 51.18
CB-10	RIM = 54.85 INV IN = 50.89 INV OUT = 50.89
CB-11	RIM = 54.31 INV IN = 50.57 INV OUT = 50.57
CB-12	RIM = 55.67 INV OUT = 50.27
CB-13	RIM = 55.67 INV IN = 51.26 INV OUT = 51.26
CB-14	RIM = 56.01 INV IN = 51.45 INV OUT = 51.45
CB-15	RIM = 54.83 INV OUT = 52.89
DI-1	RIM = 57.28 INV IN = 52.60 INV IN = 50.14 INV OUT = 50.14
DI-2	RIM = 57.70 INV OUT = 54.00
JB-2	RIM = 56.2 INV IN = 50.21 INV IN = 51.22 INV OUT = 51.22 INV OUT = 53.60
SDMH-1	RIM = 54.77 INV IN = 52.83 INV OUT = 52.83
SDMH-2	RIM = 56.88 INV IN = 51.71 INV OUT = 51.71
EX. CB #1	RIM = 54.39 INV IN = 52.45 INV OUT = 51.68
EX. CB #3	RIM = 55.69 INV IN = 50.78

STORM DRAINAGE PIPE DATA TABLE							
FROM	TO	LENGTH	SIZE	PIPE TYPE	SLOPE	UPSTREAM INVERNT	DOWNSTREAM INVERT
CB-1	SDMH-2	75.9	15"	RCP/HDPE	0.30%	51.94	51.71
SDMH-2	CB-14	86.18	15"	RCP/HDPE	0.30%	51.71	51.45
CB-14	CB-13	64.5	15"	RCP/HDPE	0.30%	51.45	51.26
CB-13	JB-2	12.55	15"	RCP/HDPE	0.30%	51.26	51.22
CB-12	JB-2	10.76	15"	RCP/HDPE	0.56%	50.27	50.21
JB-2	IT-1	71.91	24"	RCP/HDPE	0.30%	51.22	51.00
CB-3	CB-4	116.49	15"	RCP/HDPE	0.30%	50.92	50.57
CB-4	DI-1	140.4	18"	RCP/HDPE	0.31%	50.57	50.14
DI-2	DI-1	56.13	15"	RCP/HDPE	2.50%	54.00	52.60
DI-1	IT-1	16.77	24"	RCP/HDPE	0.83%	50.14	50.00
JB-2	O-4	11.88	15"	RCP	0.30%	53.60	53.56
CB-2	IB-1	44.37	18"	RCP/HDPE	0.27%	54.12	54.00
IB-1	O-1	35.97	18"	RCP	0.53%	56.75	56.56
CB-5	CB-6	83.06	18"	RCP/HDPE	0.49%	51.62	51.21
CB-8	CB-7	78.53	15"	RCP/HDPE	0.50%	51.98	51.59
CB-7	CB-6	77.52	18"	RCP/HDPE	0.49%	51.59	51.21
CB-6	IB-2	70.54	24"	RCP/HDPE	0.30%	51.21	51.00
IB-2	O-2	7.28	24"	RCP	0.90%	53.50	53.43
CB-9	CB-10	96.65	15"	RCP/HDPE	0.30%	51.18	50.89
CB-10	CB-11	107.99	15"	RCP/HDPE	0.30%	50.89	50.57
CB-11	IB-3	15.15	15"	RCP/HDPE	0.46%	50.57	50.50
IB-3	O-3	14.38	24"	RCP	0.37%	52.30	52.25
CB-15	SDMH-1/EX. CB #2	11.3	15"	RCP	0.54%	52.89	52.83
SDMH-1	EX. CB #1	144.15	15"	RCP	0.26%	52.83	52.45
EX. CB #1	EX. CB #3	65.9	18"	RCP	1.37%	51.68	50.78

STORM DRAINAGE AND GRADING NOTES:

1. IN ACCORDANCE WITH NC GENERAL STATUTES, NPDES REGULATIONS, AND NCDENR REQUIREMENTS, STORMWATER DISCHARGE OUTFALLS SHALL BE INSPECTED BY THE CONTRACTOR. INSPECTIONS SHALL BE PERFORMED BY THE CONTRACTOR AFTER EACH STORM EVENT OF 1/2 INCH OR GREATER, WITH ONE WEEKLY INSPECTION MINIMUM. NCDENR STANDARD INSPECTION REPORTS SHALL BE PREPARED AND SIGNED WITH COPIES PROVIDED TO THE OWNER, ARCHITECT, AND ENGINEER, BY THE CONTRACTOR.
2. INLET PROTECTION SHALL BE INSTALLED AROUND OUTFALL. DEVICES SHALL BE CONSTRUCTED TO FINAL PROPOSED CONDITION UPON STABILIZATION OF CONTRIBUTING GROUND SURFACES AND REMOVAL OF SEDIMENT FROM STORM PIPES.
3. SEDIMENT / EROSION DEVICES SHALL BE CHECKED BY THE CONTRACTOR DAILY. EACH DEVICE IS TO BE MAINTAINED OR REPLACED IF SEDIMENT ACCUMULATION HAS REACHED ONE HALF THE CAPACITY OF THE DEVICE.
4. ALL DIMENSIONS AND GRADES SHOWN ON THE PLANS SHALL BE FIELD VERIFIED BY THE CONTRACTOR PRIOR TO CONSTRUCTION. CONTRACTOR SHALL NOTIFY CONSTRUCTION MANAGER IF ANY DISCREPANCIES EXIST PRIOR TO PROCEEDING WITH CONSTRUCTION FOR NECESSARY PLAN OR GRADE CHANGES. NO EXTRA COMPENSATION SHALL BE PAID TO CONTRACTOR FOR ANY WORK DONE DUE TO DIMENSIONS OR GRADES SHOWN INCORRECTLY ON THESE PLANS IF SUCH NOTIFICATION HAS NOT BEEN GIVEN.
5. UNLESS OTHERWISE NOTED, GRADES AND SPOT ELEVATIONS NOTED ON PLANS INDICATE FINISHED GRADE OR PAVEMENT SURFACE. ALL DIMENSIONS ARE MEASURED TO THE BACK OF CURB UNLESS OTHERWISE INDICATED.
6. ALL AREAS TO BE GRADED SO THAT NO AREAS OF STANDING WATER OCCUR.

NOTE: STATE REGULATED WATER BODY SERVING THE WATERSHED: BARNARDS CREEK (C; Sw).

REV.NO.	DESCRIPTIONS	DATE
E	CITY OF WILMINGTON - EARLY GRADING RELEASE SUBMITTAL	7/21/16
H	PERMIT SUBMITTAL SET - COW, NHC	6/24/16
G	PERMIT SUBMITTAL SET - CPPUA, NCDOT, COW, NHC	5/6/16
F	ADDENDUM #1 - REVISIONS TO UTILITY PLAN	4/7/16
E	CITY OF WILMINGTON STORMWATER AND NHC SEDIMENT AND EROSION CONTROL SUBMITTAL	3/24/16
D	CITY OF WILMINGTON SRB SUBMITTAL	3/4/16
C	CITY OF WILMINGTON TRC SUBMITTAL	2/10/16
B	CITY OF WILMINGTON SRB SUBMITTAL	2/2/16
A	CITY OF WILMINGTON CONCEPT TRC SUBMITTAL	11/5/2015

REVISIONS

SEAL
PRELIMINARY PLAN NOT FOR CONSTRUCTION

SEAL
NORTH CAROLINA PROFESSIONAL SEAL 038675 ENGINEER TAMARA C. MURPHY
7/21/16

McKIM&CREED
243 North Front Street
Wilmington, NC 28401
Phone: (910)343-1048, Fax: (910)251-8282
NC LICENSE F-1222
www.mckimcreed.com

SHIPYARD VILLAGE WILMINGTON, LLC
PO BOX 29169
GREENSBORO, NC 27429-9169

SHIPYARD VILLAGE APARTMENTS
2821 CAROLINA BEACH ROAD
WILMINGTON, NORTH CAROLINA
TOWNSHIP OF WILMINGTON

GRADING AND DRAINAGE PLAN

DATE:	21JUL16
MCE PROJ. #	07010-0001
DRAWN	TCM/TSM
DESIGNED	TCM/TSM
CHECKED	RMC
PROJ. MGR.	TSM

SCALE
HORIZONTAL: 1"=50'
VERTICAL: N/A

M&C FILE NUMBER: CG101
DRAWING NUMBER: 11

STATUS: PRELIMINARY PLANS NOT FOR CONSTRUCTION
REVISION

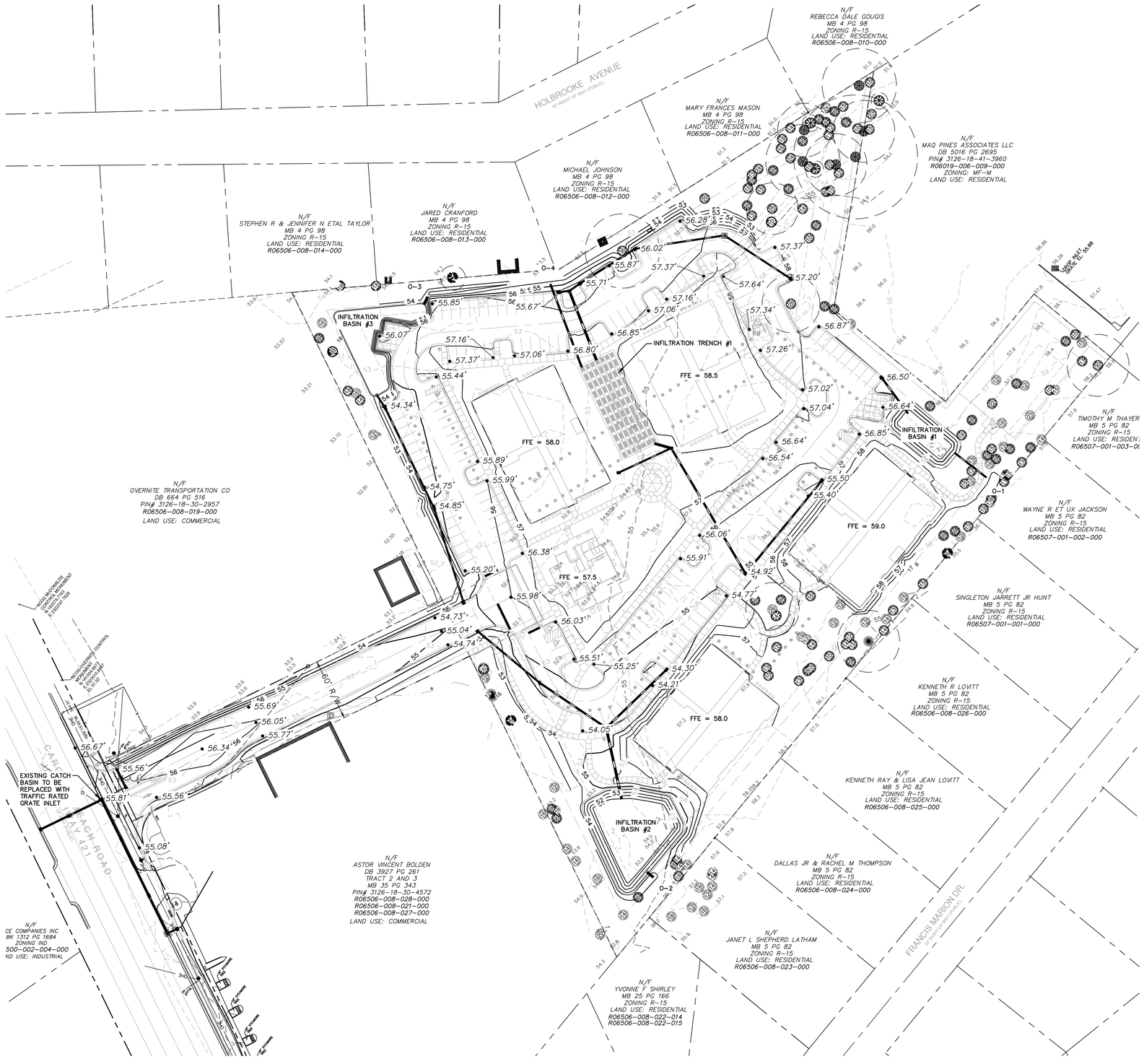

NOTE: FOR CLARITY, SPOT ELEVATIONS ARE PROVIDED AT THE EDGE OF PAVEMENT ONLY.
FACE OF CURB = -0.042' LOWER THAN EP, 0.042' HIGHER THAN EP FOR SPILL CURB
BACK OF CURB = 0.5' HIGHER THAN FC

REV. NO.	DESCRIPTIONS	DATE
I	CITY OF WILMINGTON - EARLY GRADING RELEASE SUBMITTAL	7/21/16
H	PERMIT SUBMITTAL SET - CO/W, NHC	6/24/16
G	PERMIT SUBMITTAL SET - CP/PUA, NCDOT, CO/W, NHC	5/6/16
F	ADDENDUM #1 - REVISIONS TO UTILITY PLAN	4/7/16
E	CITY OF WILMINGTON STORMWATER AND NHC SEDIMENT AND EROSION CONTROL SUBMITTAL	3/24/16
D	CITY OF WILMINGTON SRB SUBMITTAL	3/4/16
C	CITY OF WILMINGTON TRC SUBMITTAL	2/10/16
B	CITY OF WILMINGTON SRB SUBMITTAL	2/2/16
A	CITY OF WILMINGTON CONCEPT TRC SUBMITTAL	11/5/2015

REVISIONS

SEAL

PRELIMINARY PLAN
NOT FOR
CONSTRUCTION

SEAL

NORTH CAROLINA PROFESSIONAL SEAL 038675 ENGINEER TAMARA C. MURPHY
7/21/16

McKIM&CREED
243 North Front Street
Wilmington, NC 28401
Phone: (910)343-1048, Fax: (910)251-8282
NC LICENSE F-1222
www.mckimcreed.com

SHIPYARD VILLAGE WILMINGTON, LLC
PO BOX 29169
GREENSBORO, NC 27429-9169

SHIPYARD VILLAGE APARTMENTS
2821 CAROLINA BEACH ROAD
WILMINGTON, NORTH CAROLINA
TOWNSHIP OF WILMINGTON

GRADING AND DRAINAGE PLAN
SPOT ELEVATIONS

DATE:	21JUL16
MCE PROJ. #	07010-0001
DRAWN	TCM/TSM
DESIGNED	TCM/TSM
CHECKED	RMC
PROJ. MGR.	TSM

SCALE
HORIZONTAL: 1"=50'
VERTICAL: N/A

M&C FILE NUMBER: CG102
DRAWING NUMBER: 12

STATUS: PRELIMINARY PLANS
NOT FOR CONSTRUCTION
REVISION

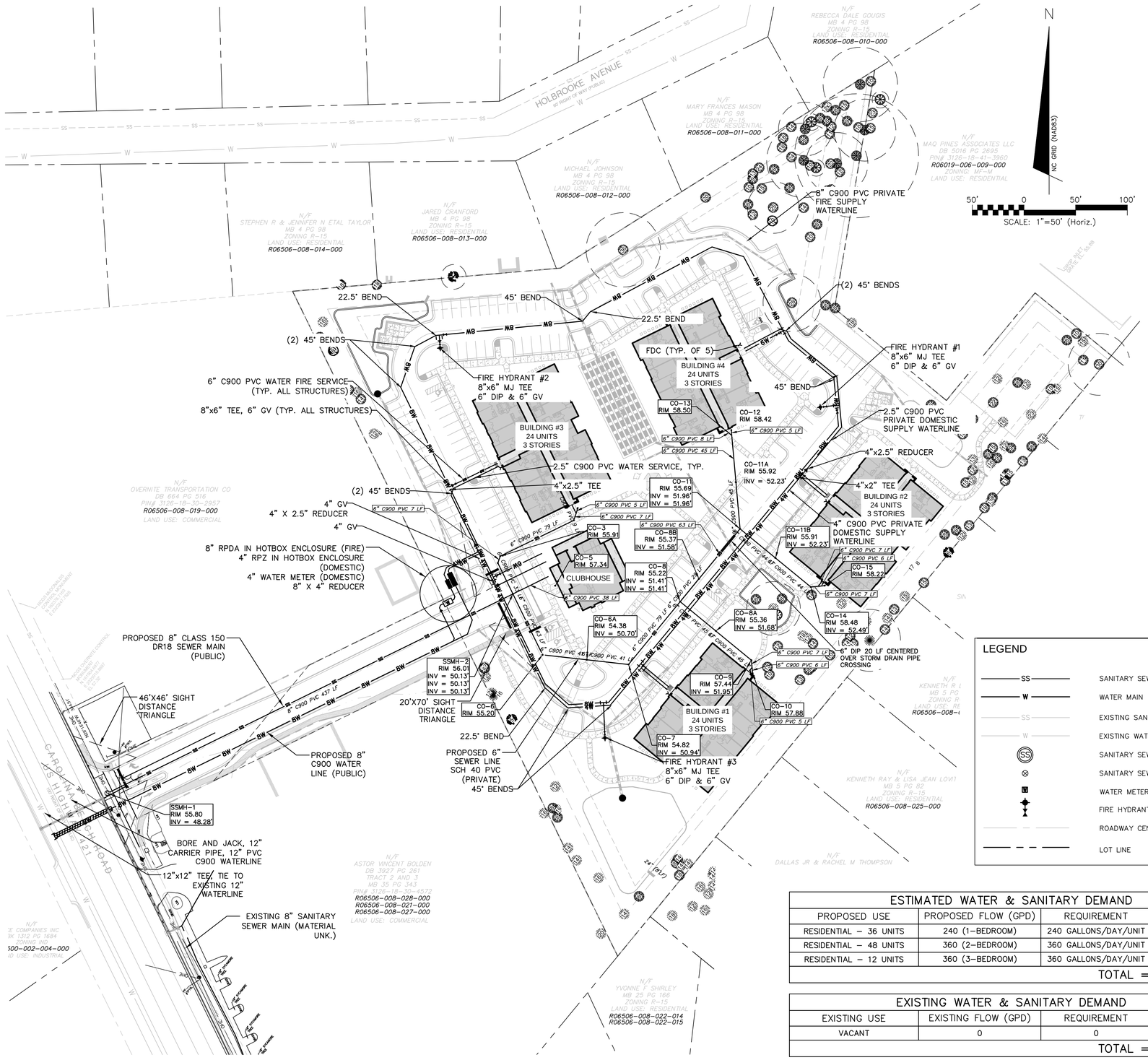

LEGEND

SS	SANITARY SEWER LINE
W	WATER MAIN
SS	EXISTING SANITARY SEWER LINE
W	EXISTING WATER MAIN
SS	SANITARY SEWER MANHOLE
	SANITARY SEWER CLEANOUT
	WATER METER
	FIRE HYDRANT ASSEMBLY (FHA)
	ROADWAY CENTERLINE
	LOT LINE

ESTIMATED WATER & SANITARY DEMAND

PROPOSED USE	PROPOSED FLOW (GPD)	REQUIREMENT	FLOW (GAL)
RESIDENTIAL – 36 UNITS	240 (1–BEDROOM)	240 GALLONS/DAY/UNIT	8,640
RESIDENTIAL – 48 UNITS	360 (2–BEDROOM)	360 GALLONS/DAY/UNIT	17,280
RESIDENTIAL – 12 UNITS	360 (3–BEDROOM)	360 GALLONS/DAY/UNIT	4,320
		TOTAL =	30,240

EXISTING WATER & SANITARY DEMAND

EXISTING USE	EXISTING FLOW (GPD)	REQUIREMENT	FLOW (GAL)
VACANT	0	0	0
		TOTAL =	0

UTILITY NOTES

1. SCHEDULE A PRECONSTRUCTION MEETING WITH CAPE FEAR PUBLIC UTILITY AUTHORITY 48 HOURS PRIOR TO CONSTRUCTION OF WATER AND SEWER LINES.
2. WATER AND SANITARY SEWER UTILITY MAINS ARE PRIVATE BEYOND THE PUBLIC STREET RIGHT–OF–WAY.
3. THIS PROJECT SHALL COMPLY WITH THE CFPUA CROSS CONNECTION CONTROL REQUIREMENTS. WATER METER(S) CANNOT BE RELEASED UNTIL ALL REQUIREMENTS ARE MET AND NCDENR HAS ISSUED THE "FINAL APPROVAL".
4. ALL COMMERCIAL WATER SERVICES AND ANY IRRIGATION SYSTEMS SUPPLIED BY CFPUA WATER SHALL HAVE A BACKFLOW PREVENTION DEVICE ACCEPTABLE TO CFPUA AND APPROVED BY USCFCCCHR OR ASSE.
5. BACKFLOW PREVENTION AND METERS WILL BE PROVIDED FOR BOTH FIRE LINES (RPDA) AND DOMESTIC SERVICE (RPZ). FIRE LINE BACKFLOW PREVENTER AND DOMESTIC SERVICE BACKFLOW PREVENTER WILL BE LOCATED AS SHOWN ON THE UTILITY PLANS. INSTALLER OF BACKFLOW PREVENTERS MUST CONTACT CFPUA PRIOR TO INSTALLING UNITS TO GIVE CFPUA THE OPTION TO VERIFY INSTALLATION PROCEDURES.
   - 5.1. REDUCED PRESSURE PRINCIPLE ASSEMBLY FOR DOMESTIC WATER SERVICE
   - 5.2. REDUCE PRESSURE DETECTOR ASSEMBLY WILL BE UTILIZED FOR THE BACKFLOW PREVENTER ON THE FIRE SERVICE.
6. IF THE CONTRACTOR DESIRES CFPUA WATER FOR CONSTRUCTION HE SHALL APPLY IN ADVANCE FOR THIS SERVICE AND MUST PROVIDE A REDUCED PRESSURE ZONE (RPZ) BACKFLOW PREVENTION DEVICE ON THE DEVELOPER'S SIDE OF THE WATER METER BOX.
7. WATER: 2.5" PVC SERVICES SHALL BE CONSTRUCTED USING ASTM D2241, IPS, GASKETED PIPE, SDR 21. 4"–12" PVC MAINS AND SERVICES SHALL BE CONSTRUCTED USING AWWA C–900 PVC, CL235 (DR–18).
8. SANITARY SEWER: FOR PIPE SIZES 4" AND 6" PIPE SHALL BE SCH 40 CONFORMING TO THE REQUIREMENTS OF ASTM D1785 WITH SOLVENT WELD JOINTS CONFORMING TO ASTM D2672. FOR PIPE SIZES 8" THROUGH 12", PIPE SHALL BE CLASS 150, DR18 CONFORMING TO THE REQUIREMENTS OF AWWA C900 WITH ELASTOMERIC PUSH–ON JOINTS CONFORMING TO ASTM D3212 OR ASTM D3139.
9. WATER AND SEWER SERVICES CANNOT BE ACTIVATED ON NEW MAINS UNTIL ENGINEER'S CERTIFICATION AND AS–BUILTS ARE RECEIVED AND "FINAL APPROVAL" ISSUED BY PUBLIC WATER SUPPLY SECTION OF NCDENR AND "FINAL ENGINEERING CERTIFICATION" ISSUED BY DIVISION OF WATER QUALITY OF NCDENR.
10. PVC WATER MAINS AND POLYETHYLENE SERVICES ARE TO BE MARKED WITH NO. 10 SINGLE STRAND INSULATED COPPER WIRE INSTALLED THE ENTIRE LENGTH AND STRAPPED TO THE PIPES WITH DUCT TAPE. THE INSULATED WIRE IS TO BE STRIPPED TO BARE WIRE AND SECURED TO ALL VALVES. THIS WIRE IS TO BE ACCESSIBLE AT ALL FIRE HYDRANTS AND WATER METER BOXES TO AID IN FUTURE LOCATION OF FACILITIES.
11. SITE UTILITY CONTRACTOR TO PROVIDE WATER AND SANITARY SEWER SERVICE TO WITHIN 5 FEET OF THE BUILDING. CONTRACTOR SHALL COORDINATE SITE PLAN CONNECTIONS WITH THE ARCHITECTURAL BUILDING PLANS.
12. MAXIMUM BENDING RADIUS FOR 8" C–900 PVC WATER MAIN BENDS IS 380' (ONE–HALF MANUFACTURER'S RECOMMENDED ALLOWABLE LONGITUDINAL BENDING).
13. UNDERGROUND UTILITIES: ALL NEW UTILITIES SHALL BE INSTALLED UNDERGROUND, EXCEPT WHERE SUCH PLACEMENT IS PROHIBITED OR DEEMED IMPRACTICAL BY THE UTILITY PROVIDER. UNDERGROUND TERMINAL FACILITIES FOR STREET LIGHTING ALONG THE PUBLIC STREETS ABUTTING THE SUBJECT SITE SHALL BE INSTALLED BY THE DEVELOPER.
14. MINIMUM OF 36" COVERAGE ABOVE ALL WATERMAINS.
15. MINIMUM OF 36" VERTICAL SEPARATION BETWEEN WATERLINES AND STORMDRAIN CURB INLETS
16. A VARIANCE IS NOT ANTICIPATED FROM ANY NORTH CAROLINA DIVISION OF WATER QUALITY (DWQ) REQUIREMENT.
17. PLANS ARE IN COMPLIANCE WITH CAPE FEAR PUBLIC UTILITY AUTHORITY TECHNICAL STANDARDS AND SPECIFICATIONS.

RELATION OF WATER MAINS TO SANITARY SEWERS:

1. LATERAL SEPARATION OF SANITARY SEWERS AND WATER MAINS: WATER MAINS SHALL BE LAID AT LEAST 10 FEET LATERALLY FROM EXISTING OR PROPOSED SEWERS UNLESS LOCAL CONDITIONS OR BARRIERS PREVENT A 10 FOOT LATERAL SEPARATION, IN WHICH CASE:
   - 1.1. THE WATER MAIN IS LAID IN A SEPARATE TRENCH, WITH THE ELEVATION OF THE BOTTOM OF THE WATER MAIN AT LEAST 18 INCHES ABOVE THE TOP OF THE SEWER, OR
   - 1.2. THE WATER MAIN IS LAID IN THE SAME TRENCH AS THE SEWER WITH THE WATER MAIN LOCATED AT ONE SIDE ON A BENCH OF UNDISTURBED EARTH, AND ABOVE THE TOP OF THE SEWER.
2. CROSSING A WATER MAIN OVER A SEWER MAIN: WHENEVER IT IS NECESSARY FOR A WATER MAIN TO CROSS OVER A SEWER THE WATER MAIN SHALL BE LAID AT SUCH AN ELEVATION THAT THE BOTTOM OF THE WATER MAIN IS AT LEAST 24 INCHES ABOVE THE TOP OF THE SEWER MAIN. UNLESS LOCAL CONDITIONS OR BARRIERS PREVENT AN 18 INCH VERTICAL SEPARATION – IN WHICH CASE BOTH THE WATER MAIN AND THE SEWER MAIN SHALL BE CONSTRUCTED OF FERROUS MATERIALS AND WITH JOINTS THAT ARE EQUIVALENT TO WATER MAIN STANDARDS FOR A DISTANCE OF 10 FEET ON EACH SIDE OF THE POINT OF CROSSING.
3. CROSSING A WATER MAIN UNDER A SEWER MAIN: WHENEVER IT IS NECESSARY FOR A WATER MAIN TO CROSS UNDER A SEWER MAIN BOTH THE WATER MAIN AND THE SEWER MAIN SHALL BE CONSTRUCTED OF FERROUS MATERIALS AND WITH JOINTS EQUIVALENT TO WATER MAIN STANDARDS FOR A DISTANCE OF 10 FEET ON EACH SIDE OF THE POINT OF CROSSING.
4. CROSSING A SEWER MAIN/WATER MAIN OVER OR UNDER A STORM DRAIN: WHENEVER IT IS NECESSARY FOR A SEWER MAIN/WATER MAIN TO CROSS A STORM DRAIN PIPE, THE SEWER MAIN/WATER MAIN SHALL BE LAID AT SUCH AN ELEVATION THAT THE OUTSIDE OF THE SEWER MAIN/WATER MAIN NEAREST TO THE OUTSIDE OF THE STORM DRAIN PIPE SHALL MAINTAIN A 24 INCH CLEAR SEPARATION DISTANCE HORIZONTAL, OR THE SEWER MAIN/WATER MAIN SHALL EITHER BE CONSTRUCTED OF DUCTILE IRON PIPE OR ENCASED IN EITHER CONCRETE OR DUCTILE IRON PIPE FOR AT LEAST 5 FEET ON EITHER SIDE OF THE CROSSING.

UTILITY COMPANY CONTACTS

DUKE/PROGRESS ENERGY: SID LIVINGSTON/MARK HATFIELD (910) 452–2777

DUKE ENERGY (TRANSMISSION): BILL WILDER (910) 772–4903

AT&T (BELLSOUTH): JAMES BATSON (910) 452–5300

TIME WARNER CABLE: ROBERT JOHN (910) 216–4494

PIEDMONT NATURAL GAS: PAUL GONKA (910) 512–2841
DJ MEDEIROS (910) 431–3233

CAPE FEAR PUBLIC UTILITY AUTHORITY (910) 332–6550

CAPE FEAR PUBLIC UTILITY AUTHORITY STANDARD SEWER NOTES

1. SEWER GUARDS REQUIRED AT ALL MANHOLES. STAINLESS STEEL SEWER GUARDS REQUIRED AT MANHOLES LOCATED IN TRAFFIC AREAS.
2. SERVICES SHALL BE PERPENDICULAR TO MAIN AND TERMINATE AT RIGHT–OF–WAY LINE. SERVICES IN CUL–DE–SACS ARE REQUIRED TO BE PERPENDICULAR, OR MUST ORIGINATE IN MANHOLE AND TERMINATE AT RIGHT–OF–WAY LINE.
3. ALL SERVICES TYING INTO DUCTILE IRON MAINS SHALL BE CONSTRUCTED OF CLASS 50, DIP, WITH PROTECTO 401 CERAMIC EPOXY LINING.
4. MINIMUM 10' UTILITIES EASEMENT PROVIDED ALONG THE FRONTAGE OF ALL LOTS AND AS SHOWN FOR NEW DEVELOPMENTS.
5. NO FLEXIBLE COUPLINGS SHALL BE USED.
6. ALL STAINLESS STEEL FASTENERS SHALL BE 316.

FIRE PROTECTION NOTES:

1. HYDRANT MUST BE WITHIN 150' OF THE FDC.
2. THE FDC MUST BE WITHIN 40' OF FIRE APPARATUS PLACEMENT.
3. LANDSCAPING OR PARKING CANNOT BLOCK OR IMPEDE THE FDC OR FIRE HYDRANTS. A 3–FOOT CLEAR SPACE SHALL BE MAINTAINED AROUND THE CIRCUMFERENCE OF THE HYDRANT AND FDC.
4. HYDRANTS MUST BE LOCATED WITHIN 8' OF THE CURB.
5. COMBUSTIBLE MATERIALS MAY NOT BE STORED OR ERECTED ONSITE WITHOUT CITY FIRE INSPECTOR APPROVAL.
6. NEW HYDRANTS MUST BE AVAILABLE FOR USE PRIOR TO CONSTRUCTION OF THE BUILDING(S).
7. UNDERGROUND FIRE LINE AND PRIVATE WATER MAINS MUST BE PERMITTED AND INSPECTED BY THE WILMINGTON FIRE DEPARTMENT FROM THE PUBLIC RIGHT–OF–WAY TO THE BUILDING. CONTACT THE WILMINGTON FIRE DEPARTMENT DIVISION OF FIRE AND LIFE SAFETY AT 910–343–0696 FOR ADDITIONAL INFORMATION.
8. A MINIMUM OF 5' SHALL SEPARATE UNDERGROUND FIRE LINES OR PRIVATE WATER MAINS FROM UNDERGROUND UTILITIES
9. CONTRACTOR SHALL MAINTAIN AN ALL WEATHER ACCESS FOR EMERGENCY VEHICLES AT ALL TIMES DURING CONSTRUCTION.
10. TEMPORARY STREET SIGNS SHALL BE INSTALLED AT EACH STREET INTERSECTION WHEN CONSTRUCTION OF NEW ROADWAYS ALLOWS PASSAGE BY VEHICLES.

CALL NC ONE CALL BEFORE YOU DIG
STOP
1–800–632–4949
AVOID UTILITY DAMAGE

PHONE# 1–800–632–4949

REV.NO.	DESCRIPTIONS	DATE
I	CITY OF WILMINGTON - EARLY GRADING RELEASE SUBMITTAL	7/21/16
H	PERMIT SUBMITTAL SET - CO#, NHC	6/24/16
G	PERMIT SUBMITTAL SET - CFPUA, NCDOT, CO#, NHC	5/6/16
F	ADDENDUM #1 - REVISIONS TO UTILITY PLAN	4/7/16
E	CITY OF WILMINGTON STORMWATER AND NHC SEDIMENT AND EROSION CONTROL SUBMITTAL	3/24/16
D	CITY OF WILMINGTON SRB SUBMITTAL	3/4/16
C	CITY OF WILMINGTON TRC SUBMITTAL	2/10/16
B	CITY OF WILMINGTON SRB SUBMITTAL	2/2/16
A	CITY OF WILMINGTON CONCEPT TRC SUBMITTAL	11/5/2015

REVISIONS

SEAL
PRELIMINARY PLAN NOT FOR CONSTRUCTION

SEAL
NORTH CAROLINA PROFESSIONAL SEAL 038675 ENGINEER TAMRA C. MURPHY
7/21/16

McKIM&CREED
243 North Front Street
Wilmington, NC 28401
Phone: (910)343-1048, Fax: (910)251-8282
NC LICENSE F-1222
www.mckimcreed.com

SHIPYARD VILLAGE WILMINGTON, LLC
PO BOX 29169
GREENSBORO, NC 27429-9169

SHIPYARD VILLAGE APARTMENTS
2821 CAROLINA BEACH ROAD
WILMINGTON, NORTH CAROLINA
TOWNSHIP OF WILMINGTON

UTILITY PLAN

DATE:	21JUL16
MCE PROJ. #	07010-0001
DRAWN	TCM/TSM
DESIGNED	TCM/TSM
CHECKED	RMC
PROJ. MGR.	TSM

SCALE
HORIZONTAL: 1"=50'
VERTICAL: N/A

M&C FILE NUMBER: CU101
DRAWING NUMBER: 13

STATUS: PRELIMINARY PLANS NOT FOR CONSTRUCTION
REVISION

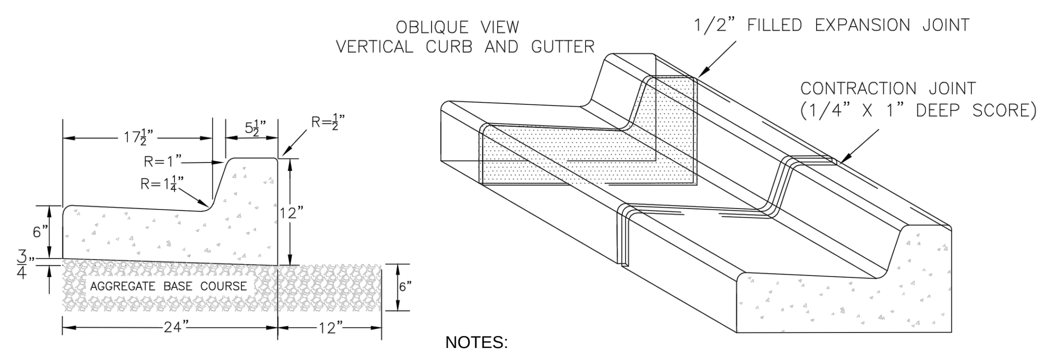

NOTES:
1. CONTRACTOR TO USE STANDARD OR SPILL SLOPE PER GRADES.
2. CONCRETE TO BE 3600 PSI.

11 (CS501) STANDARD 24" VERTICAL CURB & GUTTER
NOT TO SCALE (COW SD 3-11)

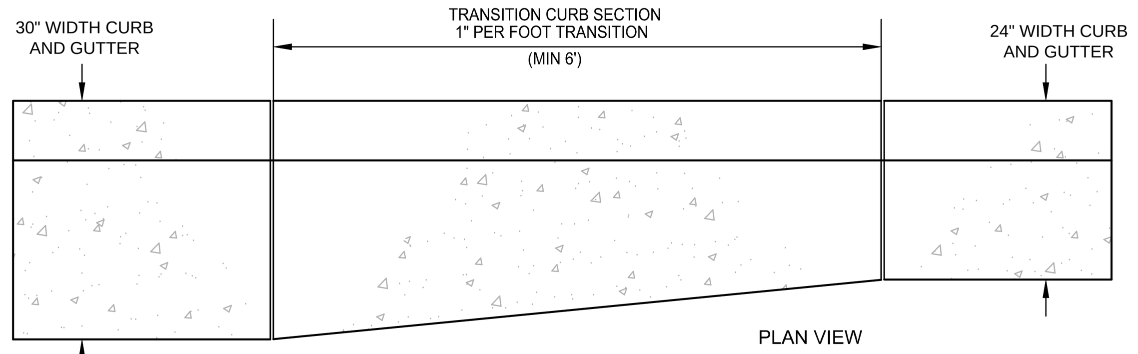

10 (CS501) TRANSITION CURB DETAILS
NOT TO SCALE

NOTES:
1. ALL WALKWAYS SHALL MEET GOVERNING MUNICIPALITIES REQUIREMENTS.
2. SUBGRADE SHALL NOT CONTAIN ANY ORGANIC MATTER.
3. REFER TO LAYOUT PLAN FOR PAVEMENT JOINT TYPES AND LOCATIONS
4. PER ADA REQUIREMENTS: MAXIMUM CROSS SLOPE OF WALKING SURFACE SHALL NOT BE STEEPER THAN 1:48, MAXIMUM RUNNING SLOPE OF WALKING SURFACE SHALL NOT BE STEEPER THAN 1:20, WALKING SURFACES ALONG AN ACCESSIBLE ROUTE STEEPER THAN 1:20 REQUIRE RAMPS, RAMP RUNS WITH A RISE GREATER THAN 6" SHALL HAVE HANDRAILS, RAMP RUNS SHALL HAVE A RUNNING SLOPE NOT STEEPER THAN 1:12, MAXIMUM RISE PER RAMP IS 30", LANDINGS MUST BE PROVIDED WHERE NECESSARY. CONTRACTOR SHALL NOTIFY ENGINEER OF ANY DISCREPANCIES.

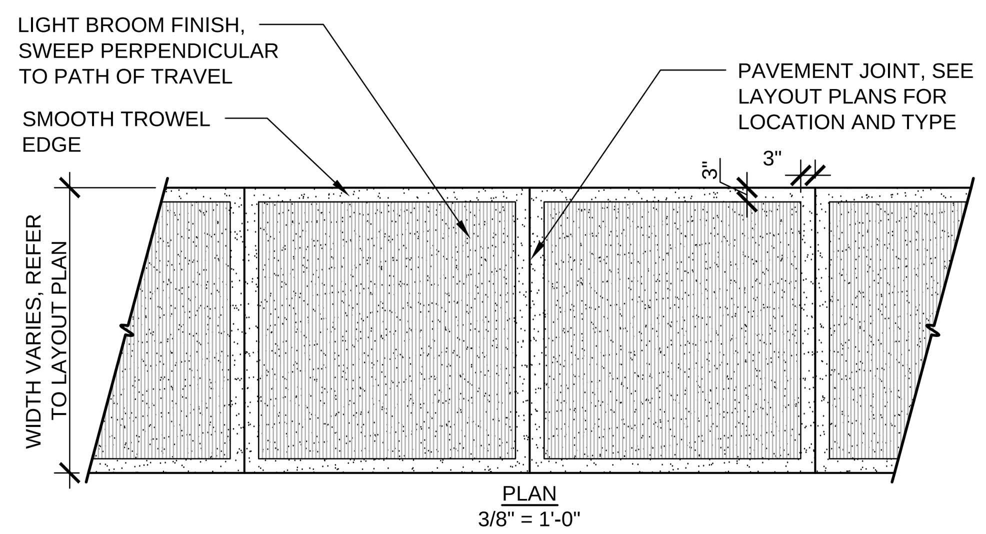

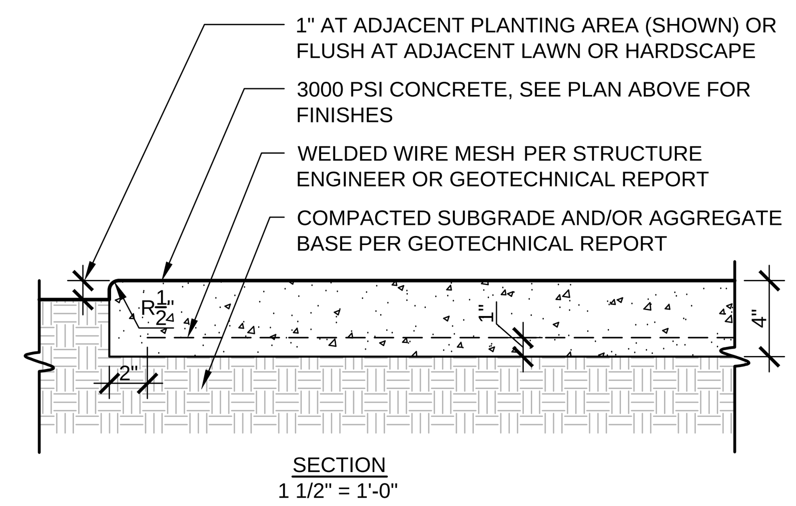

7 (CS501) INTERNAL CONCRETE SIDEWALK
NOT TO SCALE

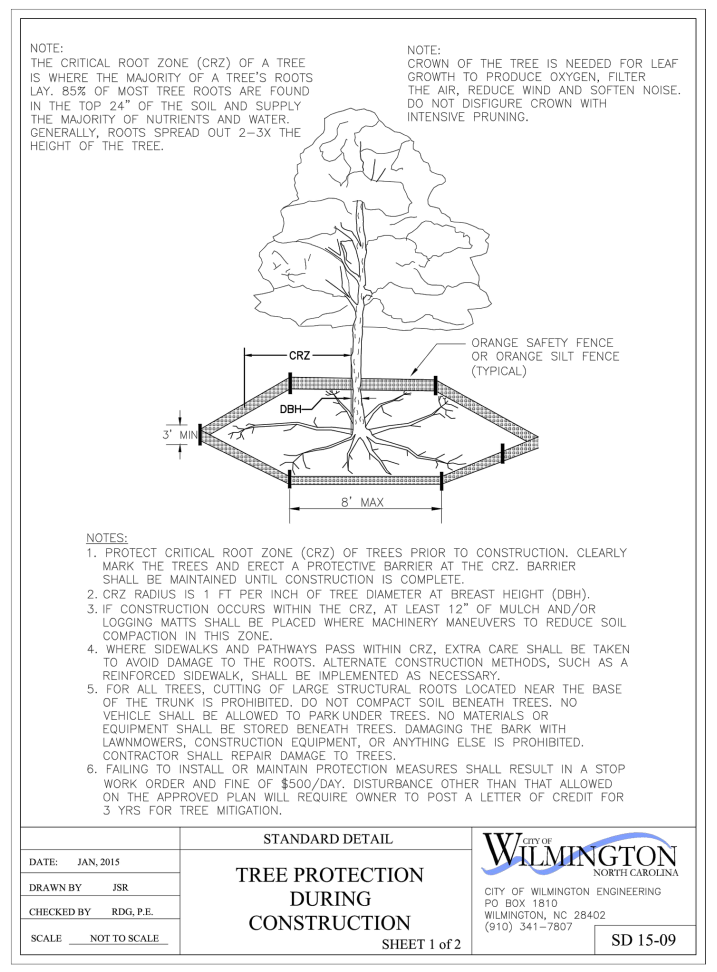

NOTE:
THE CRITICAL ROOT ZONE (CRZ) OF A TREE IS WHERE THE MAJORITY OF A TREE'S ROOTS LAY. 85% OF MOST TREE ROOTS ARE FOUND IN THE TOP 24" OF THE SOIL AND SUPPLY THE MAJORITY OF NUTRIENTS AND WATER. GENERALLY, ROOTS SPREAD OUT 2-3X THE HEIGHT OF THE TREE.

NOTE:
CROWN OF THE TREE IS NEEDED FOR LEAF GROWTH TO PRODUCE OXYGEN, FILTER THE AIR, REDUCE WIND AND SOFTEN NOISE. DO NOT DISFIGURE CROWN WITH INTENSIVE PRUNING.

NOTES:
1. PROTECT CRITICAL ROOT ZONE (CRZ) OF TREES PRIOR TO CONSTRUCTION. CLEARLY MARK THE TREES AND ERECT A PROTECTIVE BARRIER AT THE CRZ. BARRIER SHALL BE MAINTAINED UNTIL CONSTRUCTION IS COMPLETE.
2. CRZ RADIUS IS 1 FT PER INCH OF TREE DIAMETER AT BREAST HEIGHT (DBH).
3. IF CONSTRUCTION OCCURS WITHIN THE CRZ, AT LEAST 12" OF MULCH AND/OR LOGGING MATTS SHALL BE PLACED WHERE MACHINERY MANEUVERS TO REDUCE SOIL COMPACTION IN THIS ZONE.
4. WHERE SIDEWALKS AND PATHWAYS PASS WITHIN CRZ, EXTRA CARE SHALL BE TAKEN TO AVOID DAMAGE TO THE ROOTS. ALTERNATE CONSTRUCTION METHODS, SUCH AS A REINFORCED SIDEWALK, SHALL BE IMPLEMENTED AS NECESSARY.
5. FOR ALL TREES, CUTTING OF LARGE STRUCTURAL ROOTS LOCATED NEAR THE BASE OF THE TRUNK IS PROHIBITED. DO NOT COMPACT SOIL BENEATH TREES. NO VEHICLE SHALL BE ALLOWED TO PARK UNDER TREES. NO MATERIALS OR EQUIPMENT SHALL BE STORED BENEATH TREES. DAMAGING THE BARK WITH LAWNMOWERS, CONSTRUCTION EQUIPMENT, OR ANYTHING ELSE IS PROHIBITED. CONTRACTOR SHALL REPAIR DAMAGE TO TREES.
6. FAILING TO INSTALL OR MAINTAIN PROTECTION MEASURES SHALL RESULT IN A STOP WORK ORDER AND FINE OF $500/DAY. DISTURBANCE OTHER THAN THAT ALLOWED ON THE APPROVED PLAN WILL REQUIRE OWNER TO POST A LETTER OF CREDIT FOR 3 YRS FOR TREE MITIGATION.

	STANDARD DETAIL	
DATE: JAN, 2015	TREE PROTECTION DURING CONSTRUCTION	CITY OF WILMINGTON NORTH CAROLINA
DRAWN BY JSR		CITY OF WILMINGTON ENGINEERING PO BOX 1810 WILMINGTON, NC 28402 (910) 341-7807
CHECKED BY RDG, P.E.		
SCALE NOT TO SCALE	SHEET 1 of 2	SD 15-09

9 (CS501) TREE PROTECTION DURING CONSTRUCTION
NOT TO SCALE

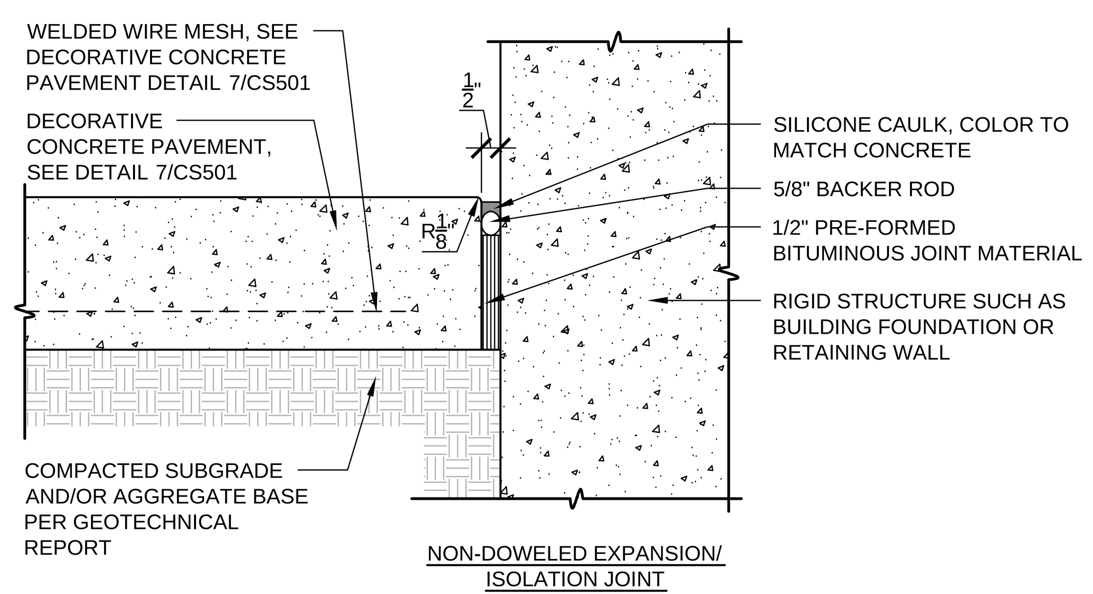

NOTES:
1. EXPANSION JOINTS SHALL BE LOCATED AS INDICATED ON THE LAYOUT PLANS, SEE SHEET 7/CS101.
2. EXTEND EXPANSION JOINT 100% THROUGH PAVEMENT SURFACE.
3. ENSURE JOINTS ARE FREE OF NON-COMPRESSABLE MATERIALS DURING INSTALLATION AND AFTER INSTALLATION.
4. WELDED WIRE MESH SHALL NOT PASS THROUGH ISOLATION/EXPANSION JOINTS.
5. SEE DETAIL 5/CS501 FOR CONTROL JOINTS AND 5/CS501 FOR CONSTRUCTION JOINTS.

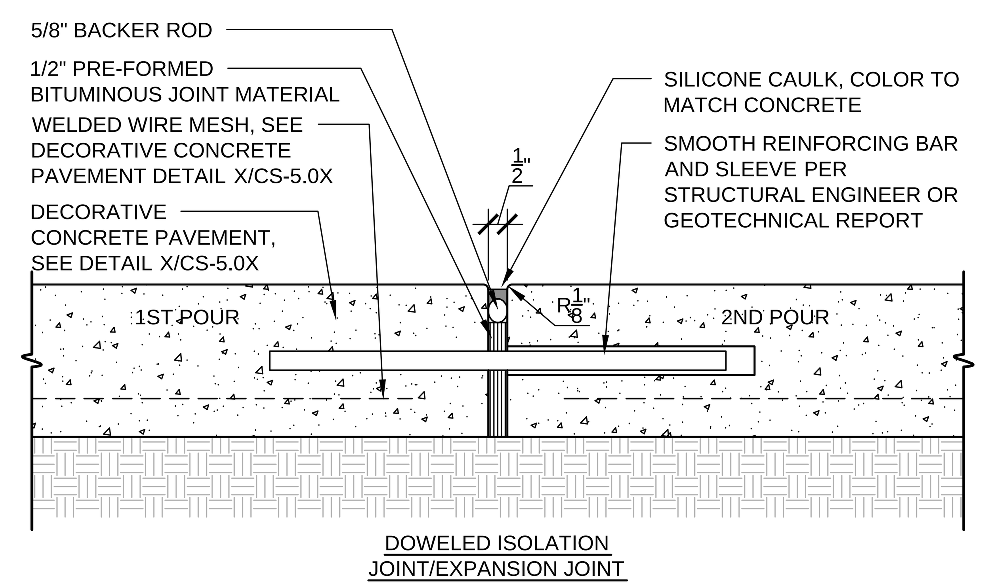

6 (CS501) INTERNAL CONCRETE SIDEWALK EXPANSION/ISOLATION JOINTS
NOT TO SCALE (COW SD 8-15)

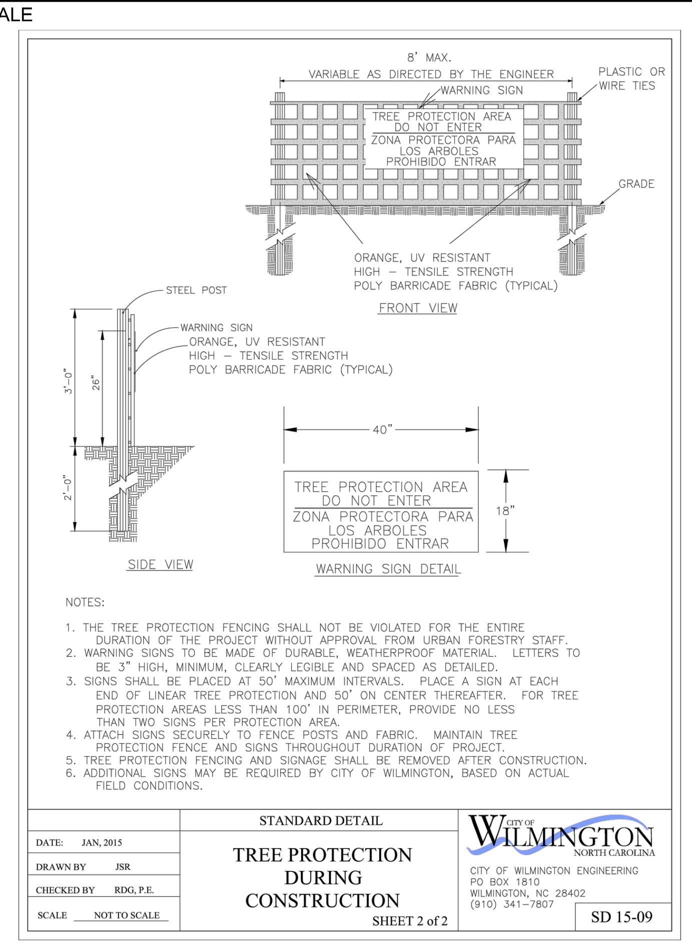

NOTES:
1. THE TREE PROTECTION FENCING SHALL NOT BE VIOLATED FOR THE ENTIRE DURATION OF THE PROJECT WITHOUT APPROVAL FROM URBAN FORESTRY STAFF.
2. WARNING SIGNS TO BE MADE OF DURABLE, WEATHERPROOF MATERIAL. LETTERS TO BE 3" HIGH, MINIMUM, CLEARLY LEGIBLE AND SPACED AS DETAILED.
3. SIGNS SHALL BE PLACED AT 50' MAXIMUM INTERVALS. PLACE A SIGN AT EACH END OF LINEAR TREE PROTECTION AND 50' ON CENTER THEREAFTER. FOR TREE PROTECTION AREAS LESS THAN 100' IN PERIMETER, PROVIDE NO LESS THAN TWO SIGNS PER PROTECTION AREA.
4. ATTACH SIGNS SECURELY TO FENCE POSTS AND FABRIC. MAINTAIN TREE PROTECTION FENCE AND SIGNS THROUGHOUT DURATION OF PROJECT.
5. TREE PROTECTION FENCING AND SIGNAGE SHALL BE REMOVED AFTER CONSTRUCTION.
6. ADDITIONAL SIGNS MAY BE REQUIRED BY CITY OF WILMINGTON, BASED ON ACTUAL FIELD CONDITIONS.

	STANDARD DETAIL	
DATE: JAN, 2015	TREE PROTECTION DURING CONSTRUCTION	CITY OF WILMINGTON NORTH CAROLINA
DRAWN BY JSR		CITY OF WILMINGTON ENGINEERING PO BOX 1810 WILMINGTON, NC 28402 (910) 341-7807
CHECKED BY RDG, P.E.		
SCALE NOT TO SCALE	SHEET 2 of 2	SD 15-09

8 (CS501) TREE PROTECTION DURING CONSTRUCTION
NOT TO SCALE

NOTES:
1. CONSTRUCTION JOINTS AS NEEDED AT CONTROL JOINT LOCATIONS AS INDICATED ON THE LAYOUT PLAN, SEE SHEET 7/CS101.
2. EXTEND JOINT GROOVE 1" BELOW FINISH GRADE OR 25% OF PAVEMENT THICKNESS WHICHEVER IS GREATER
3. SEE DETAIL 6/CS501 FOR EXPANSION/ISOLATION JOINTS AND 6/CS501 FOR CONTROL JOINTS.

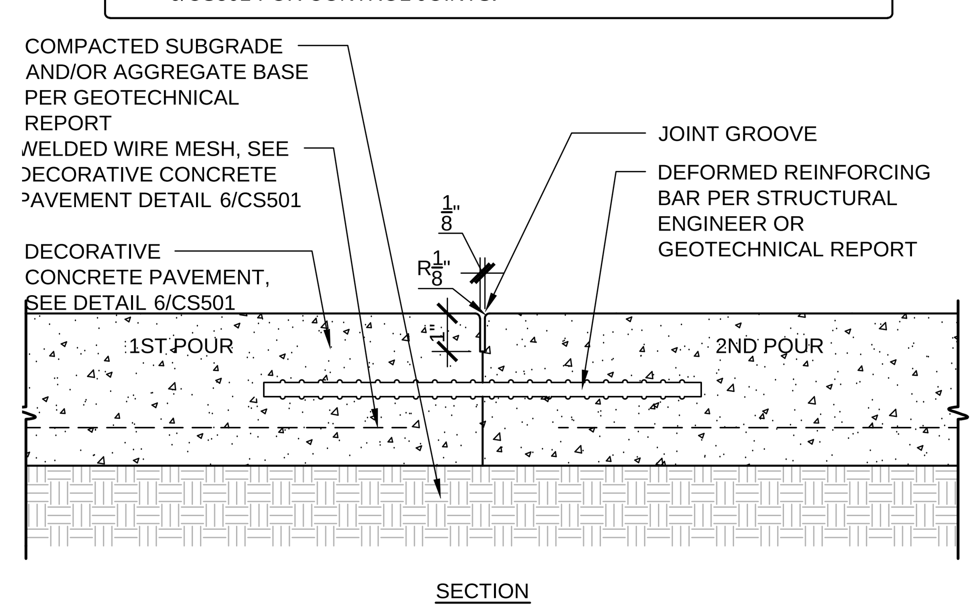

NOTES:
1. CONTROL JOINTS SHALL BE LOCATED AS INDICATED ON THE LAYOUT PLANS, SEE SHEET 7/CS101.
2. EXTEND JOINT GROOVE 1" BELOW FINISH GRADE OR 25% OF PAVEMENT THICKNESS WHICHEVER IS GREATER.
3. WELDED WIRE MESH TO PASS THROUGH ALL CONTROL JOINTS. LAP MESH ONE CELL AT ROLL/PANEL SIDES AND ENDS.
4. SEE DETAIL 6/CS501 FOR EXPANSION/ISOLATION JOINTS AND 6/CS501 FOR CONSTRUCTION JOINTS.

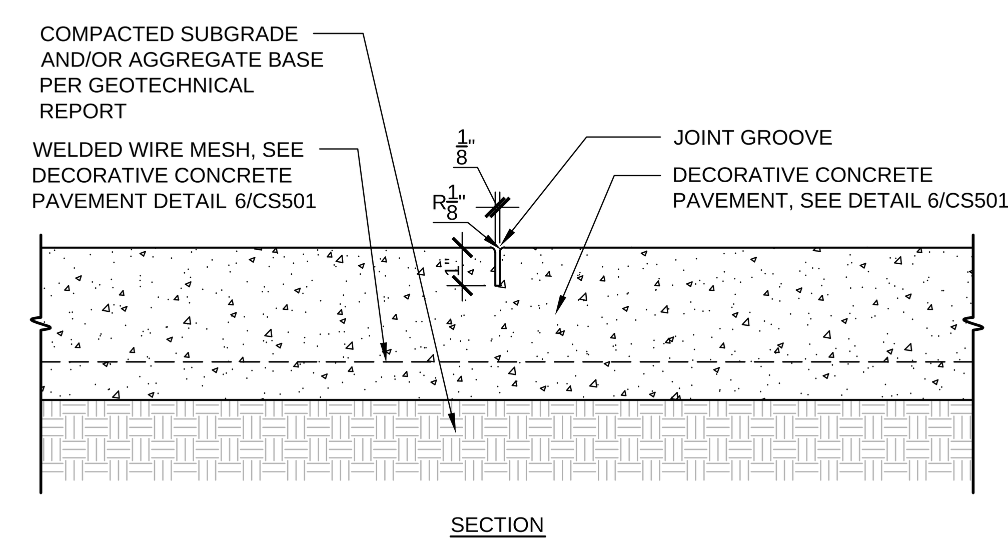

5 (CS501) INTERNAL CONCETE SIDEWALK CONTROL JOINTS
NOT TO SCALE (COW SD 8-15)

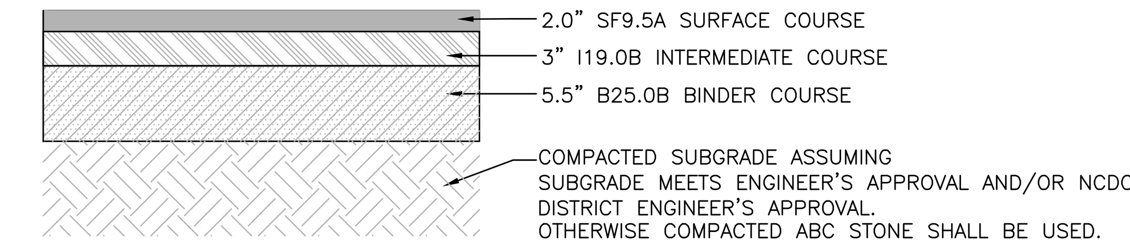

4 (CS501) NCDOT TURN LANE PAVEMENT
NOT TO SCALE

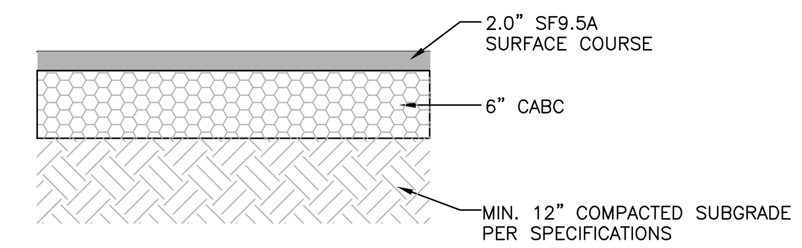

3 (CS501) PARKING AREA PAVEMENT SECTION
NOT TO SCALE

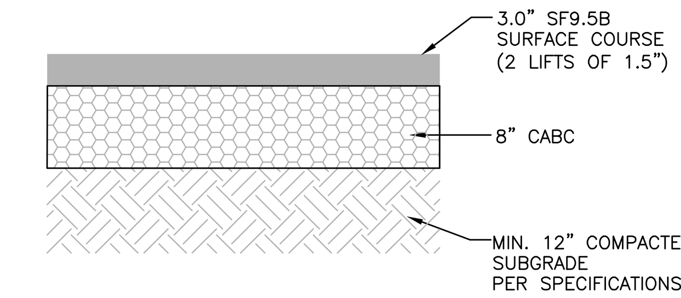

2 (CS501) STREET 'A' PAVEMENT SECTION (R/W)
NOT TO SCALE

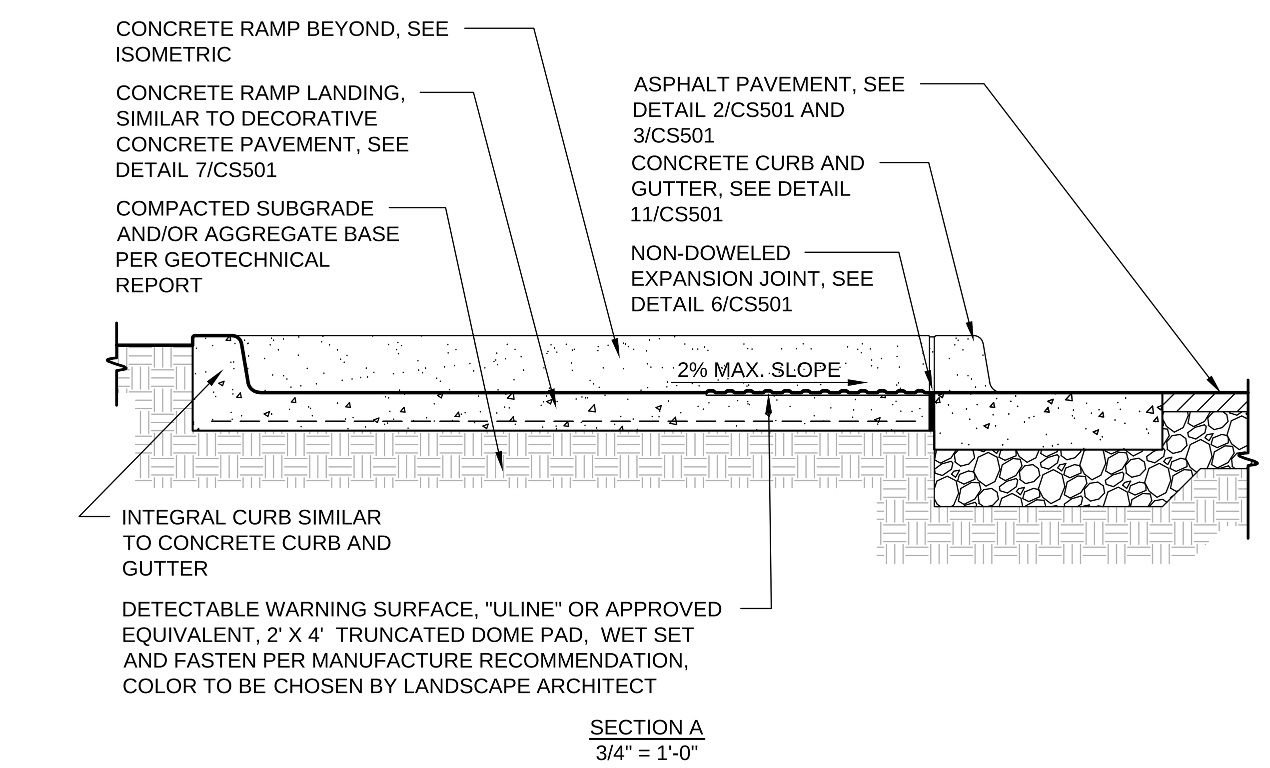

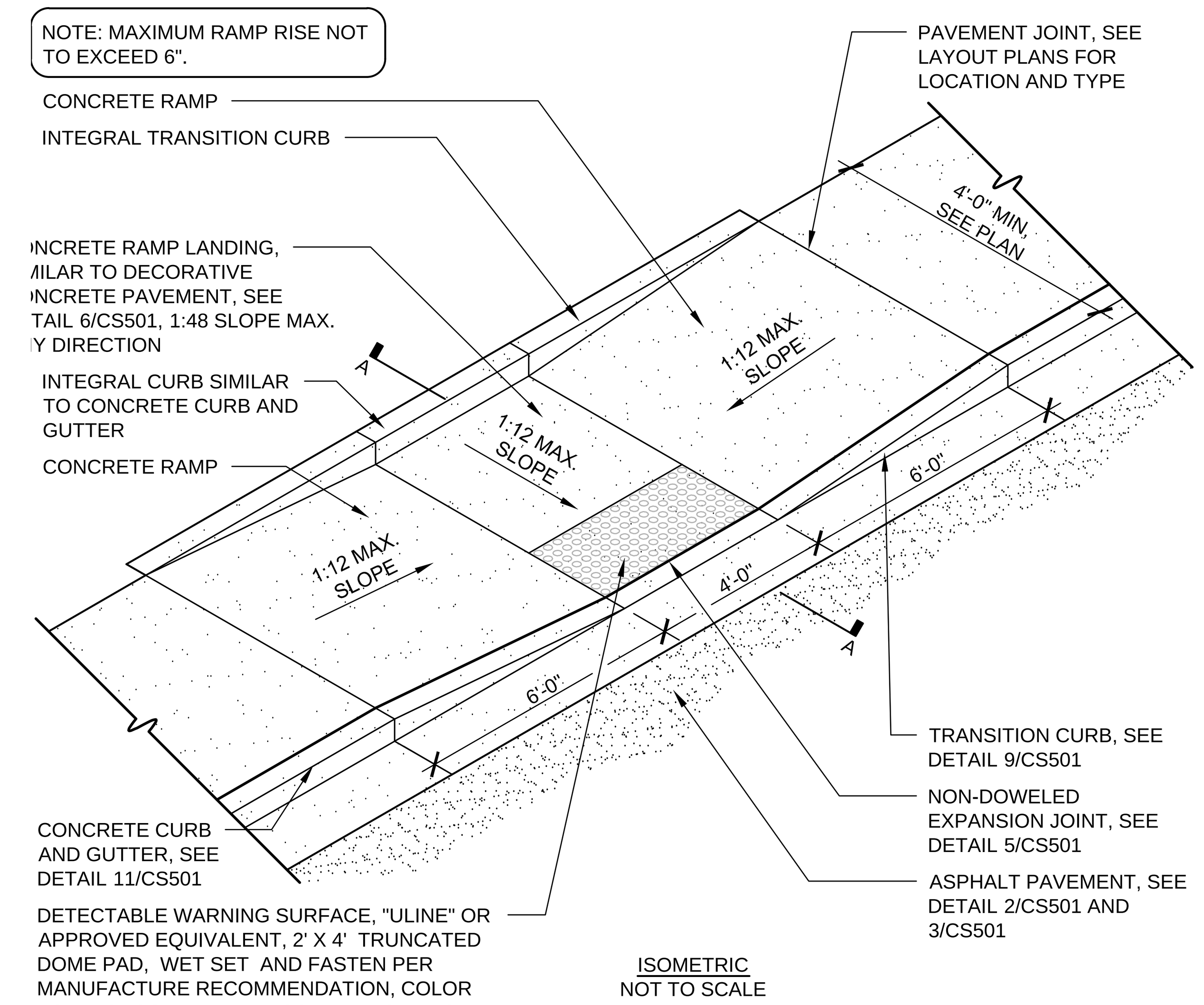

1 (CS501) HANDICAP CURB ACCESS DETAILS
NOT TO SCALE

REV.NO.	DESCRIPTIONS	DATE
I	CITY OF WILMINGTON - EARLY GRADING RELEASE SUBMITTAL	7/21/16
H	PERMIT SUBMITTAL SET - COW, NHC	6/24/16
G	PERMIT SUBMITTAL SET - CFPUA, NCDOT, COW, NHC	5/6/16
F	ADDENDUM #1 - REVISIONS TO UTILITY PLAN	4/7/16
E	CITY OF WILMINGTON STORMWATER AND NHC SEDIMENT AND EROSION CONTROL SUBMITTAL	3/24/16
D	CITY OF WILMINGTON SRB SUBMITTAL	3/4/16
C	CITY OF WILMINGTON TRC SUBMITTAL	2/10/16
B	CITY OF WILMINGTON SRB SUBMITTAL	2/2/16
A	CITY OF WILMINGTON CONCEPT TRC SUBMITTAL	11/5/2015

REVISIONS

SEAL
PRELIMINARY PLAN NOT FOR CONSTRUCTION

SEAL
NORTH CAROLINA PROFESSIONAL SEAL 038675 ENGINEER TAMARA C. MURPHY
7/21/16

McKIM&CREED
243 North Front Street
Wilmington, NC 28401
Phone: (910)343-1048, Fax: (910)251-8282
NC LICENSE F-1222
www.mckimcreed.com

SHIPYARD VILLAGE WILMINGTON, LLC
PO BOX 29169
GREENSBORO, NC 27429-9169

SHIPYARD VILLAGE APARTMENTS
2821 CAROLINA BEACH ROAD
WILMINGTON, NORTH CAROLINA
TOWNSHIP OF WILMINGTON

SITE DETAILS

DATE:	21JUL16
MCE PROJ. #	07010-0001
DRAWN	TCM/TSM
DESIGNED	TCM/TSM
CHECKED	RMC
PROJ. MGR.	TSM

SCALE
HORIZONTAL: N/A
VERTICAL: N/A

M&C FILE NUMBER CS501
DRAWING NUMBER 17

STATUS: PRELIMINARY PLANS NOT FOR CONSTRUCTION
REVISION

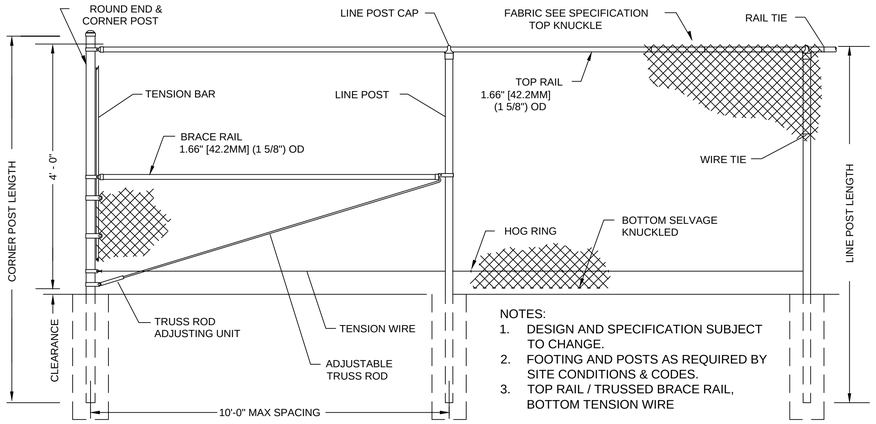

NOTES:
1. DESIGN AND SPECIFICATION SUBJECT TO CHANGE.
2. FOOTING AND POSTS AS REQUIRED BY SITE CONDITIONS & CODES.
3. TOP RAIL / TRUSSED BRACE RAIL, BOTTOM TENSION WIRE

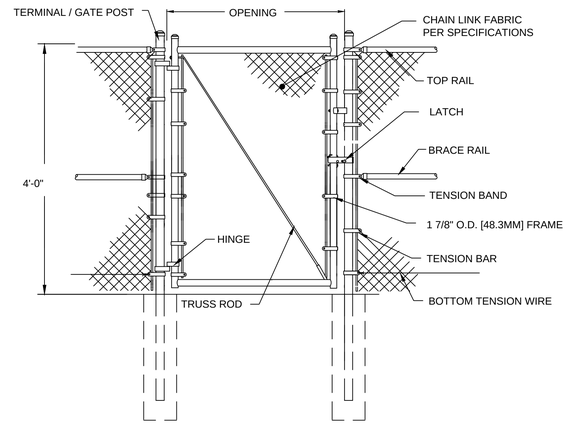

8 DOG PARK CHAIN LINK FENCE AND GATE (BLACK VINYL COATED)
CS502 NOT TO SCALE

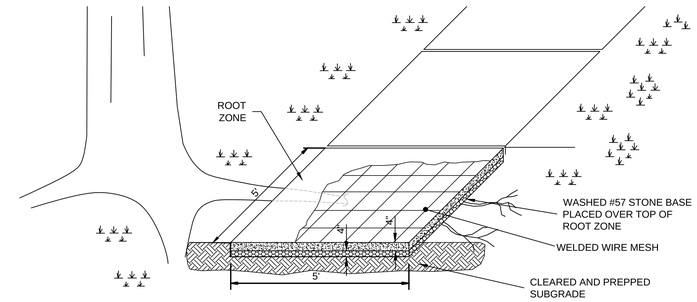

NOTES:
1-REINFORCED SIDEWALK LOCATED BY ENGINEER.
2-ALL OTHER CITY OF WILMINGTON STANDARD SIDEWALK DETAILS APPLY.
3-WELDED WIRE MESH SHALL BE 6x6 W 4.0/4.0 AND FREE OF OIL, DIRT AND DEFECTS AND PROTECTED FROM DAMAGE. WIRE SPLICES SHALL OVERLAP 12 INCHES AND BE TIED TOGETHER AND SUPPORTED IN POSITION.

2 C.O.W. REINFORCED SIDEWALK (SD 3-100)
CS502 NOT TO SCALE

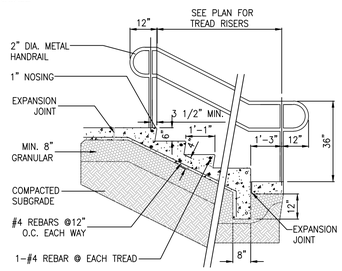

NOTES:
1. INSTALLATION TO BE COMPLETED IN ACCORDANCE WITH MANUFACTURER'S SPECIFICATIONS.
2. DO NOT SCALE DRAWINGS.
3. TREADS TO BE BROOM FINISHED.
4. POSTS TO BE FLANGE-MOUNTED.

7 CONCRETE STAIRS
CS502 NOT TO SCALE

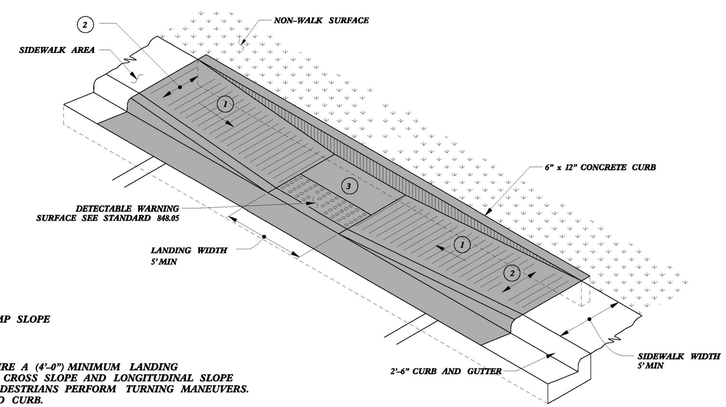

1. 8.33% (12:1) MAX RAMP SLOPE
2. CROSS SLOPE: 2.00%
3. CURB RAMPS REQUIRE A (4'-0") MINIMUM LANDING WITH A MAXIMUM CROSS SLOPE AND LONGITUDINAL SLOPE OF 2.00% WHERE PEDESTRIANS PERFORM TURNING MANEUVERS. SLOPE TO DRAIN TO CURB.

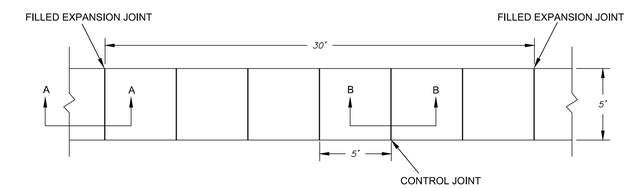

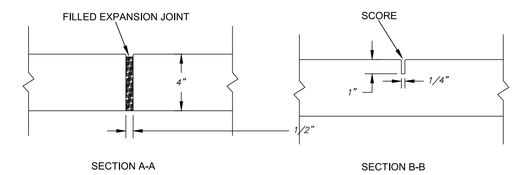

NOTES:
1. JOINT MATERIAL TO COMPLY WITH CURRENT NCDOT STANDARDS.
2. SANITARY SEWER CLEAN-OUTS, WATER METERS, MANHOLES, AND VALVE LIDS TO BE LOCATED OUTSIDE SIDEWALK WHERE FEASIBLE.
3. MINIMUM SIDEWALK WIDTH TO BE 6' MINIMUM IF PLACED AT BACK OF CURB.
4. CONCRETE FOR ALL SIDEWALKS (EXCEPT ANY PORTION CONTAIN WITHIN A DRIVEWAY APRON) SHALL BE CLASS "A" - 3,000 PSI.
5. MINIMUM REPLACEMENT FOR REPAIRS IS A 5' X 5' PANEL
6. 4" STONE BASE MAY BE REQUIRED FOR POOR SOIL CONDITIONS
7. MINIMUM DEPTH FOR TUNNELING BELOW SIDEWALK IS 12"
8. MAX ADJACENT GROUND SLOPE WITHOUT RAILING IS 2:1
9. MIN GRADE FOR PROPER DRAINAGE IS 1% IN AT LEAST 1 DIRECTION. MAX CROSS SLOPE IS 2%. MAX LONGITUDINAL SLOPE IS 8.3%, 10% IF LIMITED BY EXISTING CONDITIONS, OR NO GREATER THAN THE SLOPE OF THE EXISTING ADJACENT ROAD.

1 C.O.W. SIDEWALK (SD 3-10)
CS502 NOT TO SCALE

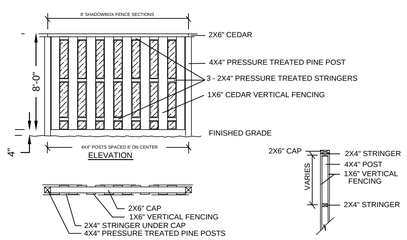

NOTE: FOUNDATIONS FOR THE FENCE POSTS SHALL BE DESIGNED BY THE FENCE CONTRACTOR

6 SHADOW BOX WOOD FENCE
CS502 NOT TO SCALE

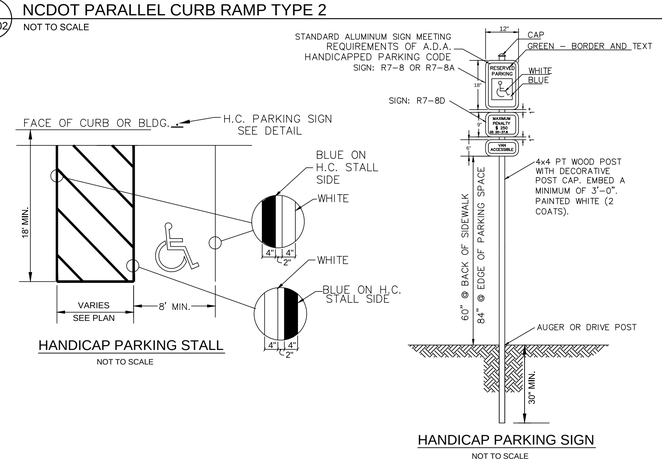

4 NCDOT PARALLEL CURB RAMP TYPE 2
CS502 NOT TO SCALE

3 PARKING STRIPING & HANDICAP DETAILS
CS502 NOT TO SCALE

POLY DOGIPOT® DOGVALET® - SAND BEIGE (#1006-2)
Dogipot DogValet OR APPROVED EQUIVALENT
- H 32.0" x W 19.0" x D 14.0"
- .192 mm sand beige rotational molded polyethylene
- Weight: 30lbs
- 400-bag capacity (includes two (2) rolls of 200 count DOGIPOT® SMART Litter Pick Up Bags™)
- Two diamond bag dispenser slots
- 12-gauge 2" x 2" x 4' square galvanized steel mounting post
- Front locking access panel
- Includes box of 50 count DOGIPOT® SMART Liner Trash Bags™
- Clearly posted instructions
- Installation instructions and mounting hardware included

7 PET WASTE RECEPTACLE
CS502 NOT TO SCALE

REV.NO.	DESCRIPTIONS	DATE
I	CITY OF WILMINGTON - EARLY GRADING RELEASE SUBMITTAL	7/21/16
H	PERMIT SUBMITTAL SET - COW, NHC	6/24/16
G	PERMIT SUBMITTAL SET - CFPUA, NCDOT, COW, NHC	5/6/16
F	ADDENDUM #1 - REVISIONS TO UTILITY PLAN	4/7/16
E	CITY OF WILMINGTON STORMWATER AND NHC SEDIMENT AND EROSION CONTROL SUBMITTAL	3/24/16
D	CITY OF WILMINGTON SRB SUBMITTAL	3/4/16
C	CITY OF WILMINGTON TRC SUBMITTAL	2/10/16
B	CITY OF WILMINGTON SRB SUBMITTAL	2/2/16
A	CITY OF WILMINGTON CONCEPT TRC SUBMITTAL	11/5/2015

REVISIONS

SEAL
PRELIMINARY PLAN NOT FOR CONSTRUCTION

SEAL
NORTH CAROLINA PROFESSIONAL SEAL 038675 ENGINEER TAMARA C. MURPHY
7/21/16

McKIM&CREED
243 North Front Street
Wilmington, NC 28401
Phone: (910)343-1048, Fax: (910)251-8282
NC LICENSE F-1222
www.mckimcreed.com

SHIPYARD VILLAGE WILMINGTON, LLC
PO BOX 29169
GREENSBORO, NC 27429-9169

SHIPYARD VILLAGE APARTMENTS
2821 CAROLINA BEACH ROAD
WILMINGTON, NORTH CAROLINA
TOWNSHIP OF WILMINGTON

SITE DETAILS

DATE:	21JUL16
MCE PROJ. #	07010-0001
DRAWN	TCM/TSM
DESIGNED	TCM/TSM
CHECKED	RMC
PROJ. MGR.	TSM

SCALE
HORIZONTAL: N/A
VERTICAL: N/A

M&C FILE NUMBER CS502
DRAWING NUMBER 18

STATUS: PRELIMINARY PLANS NOT FOR CONSTRUCTION
REVISION

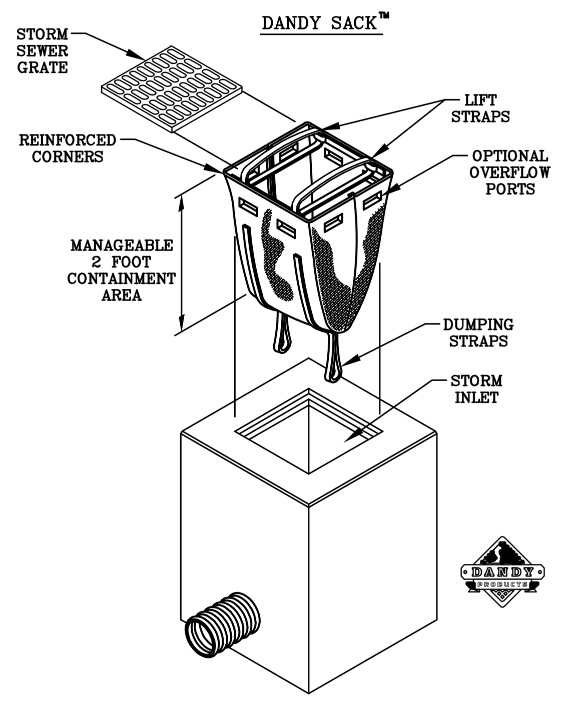

DANDY SACK™
SPECIFICATIONS

NOTE: THE DANDY SACK™ WILL BE **MANUFACTURED IN THE U.S.A.** FROM A WOVEN MONOFILAMENT FABRIC THAT MEETS OR EXCEEDS THE FOLLOWING SPECIFICATIONS:

REGULAR FLOW DANDY SACK™ (BLACK)

Mechanical Properties	Test Method	Units	MARV
Grab Tensile Strength	ASTM D 4632	kN (lbs)	1.78 (400) x 1.40 (315)
Grab Tensile Elongation	ASTM D 4632	%	15 x 15
Puncture Strength	ASTM D 4833	kN (lbs)	0.67 (150)
Mullen Burst Strength	ASTM D 3786	kPa (psi)	5506 (800)
Trapezoid Tear Strength	ASTM D 4533	kN (lbs)	0.67 (150) x 0.73 (165)
UV Resistence	ASTM D 4355	%	90
Apparent Opening Size	ASTM D 4751	Mm (US Std Sieve)	0.425 (40)
Flow Rate	ASTM D 4491	$1/min/m^2$ ($gal/min/ft^2$)	2852 (70)
Permittivity	ASTM D 4491	Sec^{-1}	0.90

HI-FLOW DANDY SACK™ (SAFETY ORANGE)

Mechanical Properties	Test Method	Units	MARV
Grab Tensile Strength	ASTM D 4632	kN (lbs)	1.62 (365) X 0.89 (200)
Grab Tensile Elongation	ASTM D 4632	%	24 X 10
Puncture Strength	ASTM D 4833	kN (lbs)	0.40 (90)
Mullen Burst Strength	ASTM D 3786	kPa (psi)	3097 (450)
Trapezoid Tear Strength	ASTM D 4533	kN (lbs)	0.51 (115) X 0.33 (75)
UV Resistance	ASTM D 4355	%	90
Apparent Opening Size	ASTM D 4751	Mm (US Std Sieve)	0.425 (40)
Flow Rate	ASTM D 4491	$1/min/m^2$ ($gal/min/ft^2$)	5907 (145)
Permittivity	ASTM D 4491	Sec^{-1}	2.1

*Note: All Dandy Sacks™ can be ordered with our optional oil absorbent pillows

6 CE501 TEMPORARY DANDY SACK® INLET PROTECTION

NOT TO SCALE

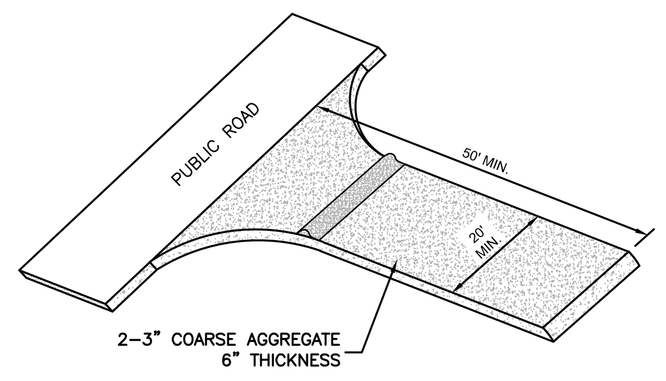

PLAN VIEW

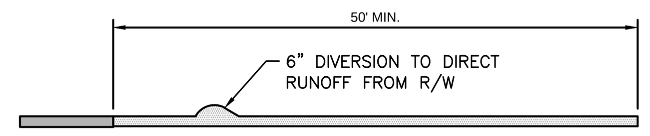

SECTION VIEW

4 CE501 TEMPORARY CONSTRUCTION ENTRANCE

NOT TO SCALE
NCDEMLR PRACTICE STD. 6.06

NPDES PERMIT NCG 010000 PLAN NOTES:

1. ACCORDING TO NPDES NCG 010000 EFFECTIVE AUGUST 3, 2011: THE PLANS SHALL CONFORM TO GROUND STABLIZIATION REQUIREMENTS OF SECTION II.B.2 GROUND STABILIZATION.
2. ACCORDING TO NPDES NCG 010000 EFFECTIVE AUGUST 3, 2011: THE SEDIMENT BASINS SHALL CONFORM TO SURFACE WITHDRAWAL REQUIREMENTS OF SECTION II.B.4 SEDIMENT BASINS.

VEGETATION PLAN SPECIFICATIONS

1. ALL DISTURBED AREAS SHALL BE DRESSED TO THE EXISTING TYPICAL SECTION AND TILLED OR RIPPED TO A MIN. DEPTH OF 4–INCHES. THE TOP 2 INCHES SHALL BE PULVERIZED TO PROVIDE A UNIFORM SEEDBED.
2. LIME AND FERTILIZER SHOULD BE INCORPORATED INTO THE SOIL PRIOR TO SEEDING OR SOD. FOLLOW SOIL TESTS OR AS FOLLOWS:
   AGRICULTURAL LIMESTONE – 2 TONS/ACRE
   FERTILIZER – 1000 LBS/ACRE (10–10–10)
   SUPERPHOSPHATE – 500 LBS/ACRE (20%)
   MULCH – 2 TONS/ACRE (SMALL GRAIN STRAW)
   ANCHOR – ASPHALT EMULSION AT 450 GAL/ACRE
3. FOR OPEN AREAS, USE STRAW MULCH AS A MINIMUM FOR STABILIZATION IF THE AREAS CANNOT BE SEEDED ACCORDING TO THE PLANTING DATES. OTHER MULCHING PRACTICES ARE LISTED IN SECTION 6.14 OF THE EROSION CONTROL MANUAL FOR MULCHING.
4. FOR DITCHES AND SLOPES, USE EXCELSIOR MATTING AS A MINIMUM FOR STABILIZATION IF THE AREAS CANNOT BE SEEDED ACCORDING TO THE PLANTING DATES. OTHER MATTING PRACTICES ARE LISTED IN SECTION 6.14 OF THE EROSION CONTROL MANUAL FOR MULCHING.
5. CHEMICAL STABILIZERS MAY BE USED, BUT IT IS NOT RECOMMENDED FOR VEGETATION GROWTH. REFER TO THE EROSION CONTROL MANUAL FOR A LIST OF STABILIZERS AND FOLLOW MANUFACTURER'S SPECIFICATIONS.
6. THE FOLLOWING TABLES ARE REFERENCED FROM NC EROSION CONTROL MANUAL SEC. 6.10 AND 6.11, AND THE STABILIZATION TABLE IS REFERENCED FROM NPDES NCG 010000.

3 CE501 STANDARD EROSION CONTROL NOTES

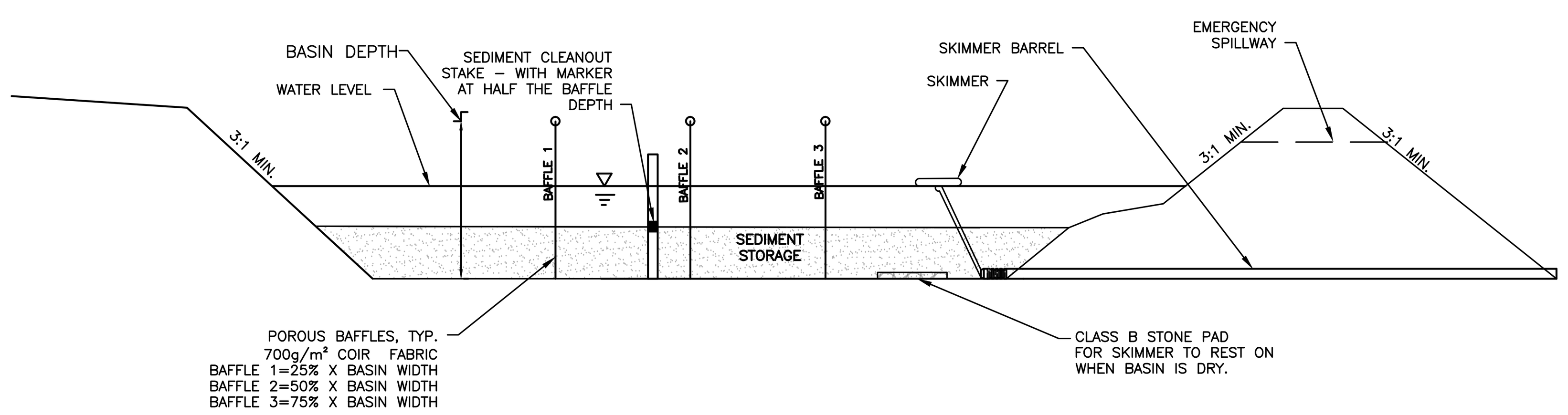

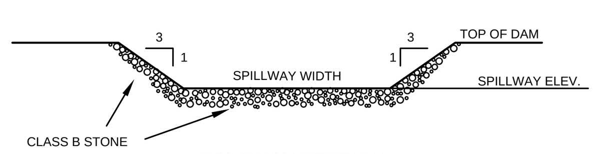

SPILLWAY SECTION

SKIMMER SEDIMENT BASINS
PHASE 2: INFILTRATION BASINS 1, 2, AND 3

NOTES:

1. BAFFLE MATERIAL SHALL BE MATERIALS SUCH AS 700 G/M COIR EROSION BLANKET OR COIR MESH
2. THE BAFFLE MATERIAL NEEDS TO BE SECURED AT THE BOTTOM AND SIDES USING STAPLES OR BY TRENCHING AS FOR SILT FENCE.
3. LOCATE THE EMERGENCY SPILLWAY ON NATURAL SOILS. AVOID PLACING IT THROUGH FILL MATERIAL WHEREVER POSSIBLE.
4. ALL RUNOFF MUST DISCHARGE TO THE INLET SIDE OF THE BASIN. DISCHARGE RUNOFF INTO THE BASIN IN A MANNER THAT MINIMIZES EROSION.

SKIMMER BASIN CALCULATION TABLE

Skimmer No.	Drainage Area ac	Rational C Runoff Coeff.	I10 Intensity in/hr	Q10 Peak Flow cfs		Required SA (350 x Q10) sf	Provided SA sf	Required Vol (1800cf/ac x DA) cf	Provided Vol cf	Storage Depth ft	Storage Vol Drained cf		Weir Width ft
SB-1	0.99	0.85	7.23	6.10		2,135	2,430	1,786	5,311	3.00	2,293		6.0
SB-2	1.55	0.66	7.23	7.40		2,589	6,723	2,790	18,124	3.00	9,073		10.0
SB-3	0.62	0.91	7.23	4.08		1,428	3,052	1,116	7,630	3.00	4,578		4.0

FAIRCLOTH SKIMMER SIZE CALCULATION

Skimmer No.	Dewatering Time (days)	Skimmer Outflow cf/day	Skimmer Size in	Orifice Diameter in	Orifice Radius in	Barrel Outflow gpm	Barrel Pipe in
SB-1	3	764	1.5	1.0	0.5	4.0	4.0
SB-2	3	3,024	2.5	1.500	0.8	15.7	4.0
SB-3	3	1,526	2.0	1.250	0.6	7.9	4.0

Faircloth Skimmer Selection Table

Skimmer Size in	Outflow Qmax cf/day	Head ft
1.5	1,728	0.125
2	3,283	0.167
2.5	6,234	0.208
3	9,774	0.250
4	20,109	0.333
5	32,832	0.333
6	51,840	0.417
8	97,978	0.500

NOTES:

1. Q10 Peak Flow were taken from Rational Method.
2. Required Surface Areas and Volumes were taken from NCDENR ESC Manual.
3. Faircloth Skimmer Selection Table taken from Table 4-2. NCDOT Level III-A Design of Sediment & Erosion Control Plans Manual
4. Emergency Weir Width taken from Skimmer Basin Criteria Section of NCDENR ESC Manual Table and/or Hydraulic Routing of the basin to ensure non-erosive velocity.
5. Minimum Barrel Pipe on the Skimmer is 4-inches. (On a 1% slope the capacity is 100 GPM)

5 CS501 TEMPORARY SEDIMENT BASIN

NOT TO SCALE

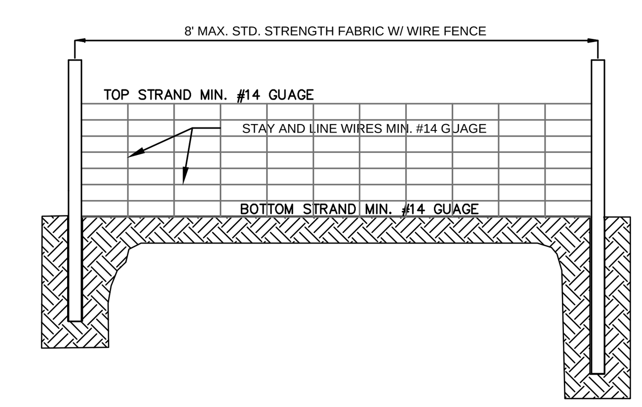

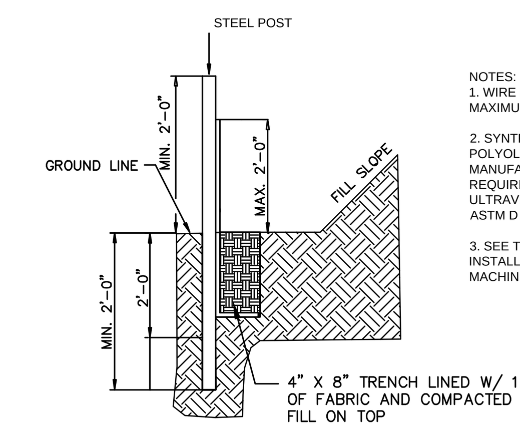

NOTES:
1. WIRE FENCE (IF USED) SHALL BE MINUMUM 14 GAUGE WITH A MAXIMUM MESH OPENING OF 6-INCHES.

2. SYNTHETIC FILTER FABRIC OF AT LEAST 95% BY WEIGHT OF POLYOLEFINS OR POLYESTER, WHICH IS CERTIFIED BY THE MANUFACTURER OR SUPPLIER AS CONFORMING TO THE REQUIREMENTS IN ASTM D 6461 AND ALSO SHOULD CONTAIN ULTRAVIOLET RAY INHIBITORS AND STABILIZERS ACCORDING TO ASTM D 4355.

3. SEE THE NC EROSION CONTROL MANUAL FOR SPECIFICATIONS INSTALLING SEDIMENT FENCE USING THE SLICING METHOD MACHINERY.

2 CE501 TEMPORARY SILT FENCE

NOT TO SCALE

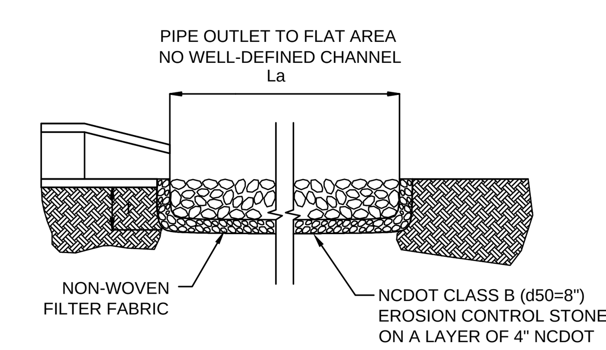

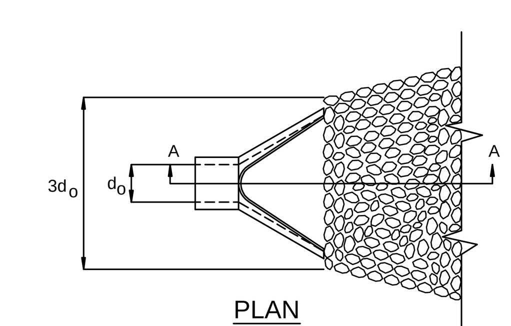

PLAN

NOTES:

1. IN A WELL-DEFINED CHANNEL EXTEND THE APRON UP THE CHANNEL BANKS TO AN ELEVATION OF 6" ABOVE THE MAXIMUM TAILWATER DEPTH OR TO THE TOP OF THE BANK, WHICHEVER IS LESS.

RIP–RAP APRON SCHEDULE

RIPRAP LOCATIONS	PIPE DIA. (IN.)	LENGTH, La (ft)	UPSTREAM WIDTH, 3xDIA (FT.)	DOWNSTREAM WIDTH, W (FT.)	STONE THICKNESS t (IN.)
O–1	15	5	3.75	VARIES WITH SWALE	9"
O–2	24	8	6.0	VARIES WITH SWALE	9"
O–3	24	8	6.0	VARIES WITH SWALE	9"
O–4	18	6	4.5	VARIES WITH SWALE	9"

1 CE501 PIPE OUTLET PROTECTION

NOT TO SCALE

REV.NO.	DESCRIPTIONS	DATE
I	CITY OF WILMINGTON - EARLY GRADING RELEASE SUBMITTAL	7/21/16
H	PERMIT SUBMITTAL SET - COW, NHC	6/24/16
G	PERMIT SUBMITTAL SET - CFPUA, NCDOT, COW, NHC	5/6/16
F	ADDENDUM #1 - REVISIONS TO UTILITY PLAN	4/7/16
E	CITY OF WILMINGTON STORMWATER AND NHC SEDIMENT AND EROSION CONTROL SUBMITTAL	3/24/16
D	CITY OF WILMINGTON SRB SUBMITTAL	3/4/16
C	CITY OF WILMINGTON TRC SUBMITTAL	2/10/16
B	CITY OF WILMINGTON SRB SUBMITTAL	2/2/16
A	CITY OF WILMINGTON CONCEPT TRC SUBMITTAL	11/5/2015

REVISIONS

SEAL

PRELIMINARY PLAN NOT FOR CONSTRUCTION

SEAL

McKIM&CREED
243 North Front Street
Wilmington, NC 28401
Phone: (910)343-1048, Fax: (910)251-8282
NC LICENSE F-1222
www.mckimcreed.com

SHIPYARD VILLAGE WILMINGTON, LLC
PO BOX 29169
GREENSBORO, NC 27429-9169

SHIPYARD VILLAGE APARTMENTS
2821 CAROLINA BEACH ROAD
WILMINGTON, NORTH CAROLINA
TOWNSHIP OF WILMINGTON

EROSION CONTROL DETAILS

DATE:	21JUL16
MCE PROJ. #	07010-0001
DRAWN	TCM/TSM
DESIGNED	TCM/TSM
CHECKED	RMC
PROJ. MGR.	TSM

SCALE
HORIZONTAL: N/A
VERTICAL: N/A

M&C FILE NUMBER
CE501
DRAWING NUMBER
21

STATUS: PRELIMINARY PLANS NOT FOR CONSTRUCTION
REVISION

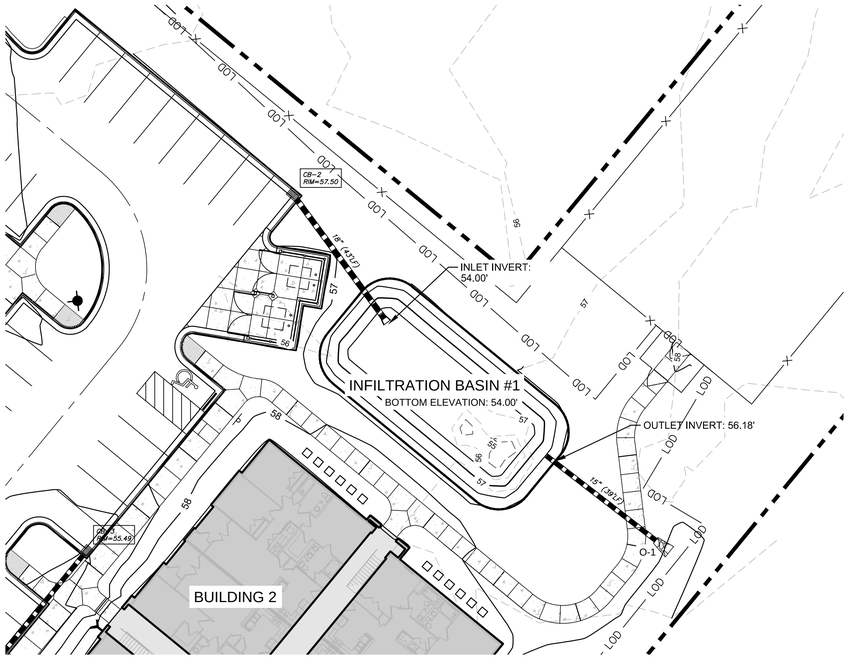

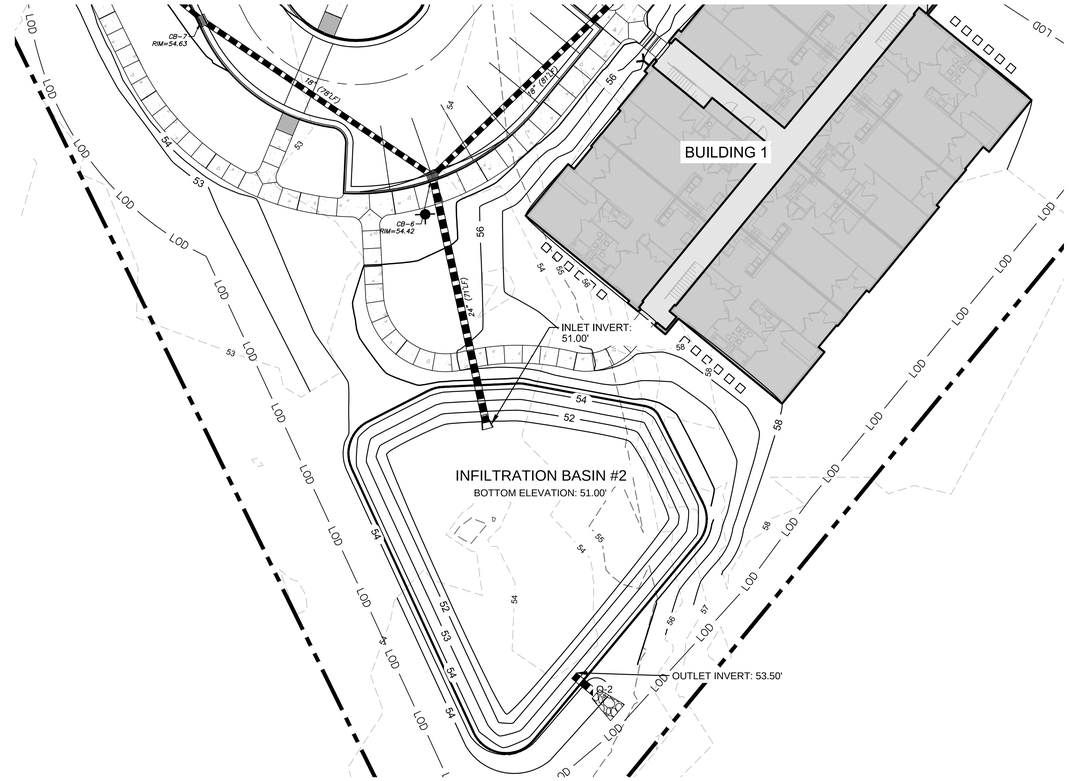

N

20' 0 20' 40'

SCALE: 1"=20' (Horiz.)

NOTES

1. THE SIDE SLOPES OF THE INFILTRATION BASIN SHALL BE SEEDED PER THE SEEDING SCHEDULE IMMEDIATELY FOLLOWING THE COMPLETION OF CONSTRUCTION.
2. THE BOTTOM SHALL BE OVEREXCAVATED 4" AND BACKFILLED WITH CLEAN SAND TO THE BOTTOM ELEVATION SPECIFIED.
3. IF HARDPAN OR OTHER UNSUITABLE SOILS ARE ENCOUNTERED, OVEREXCAVATE THE BOTTOM A MINIMUM OF 2' AND BACKFILL WITH ENGINEER APPROVED SANDY SOIL MATERIAL.
4. IF THE BASIN IS USED AS AN EROSION CONTROL DEVICE, THE BOTTOM MUST BE COMPLETELY CLEANED OUT, OVEREXCAVED 6" AND BACKFILLED WITH AN ENGINEER APPROVED SANDY SOIL MATERIAL.

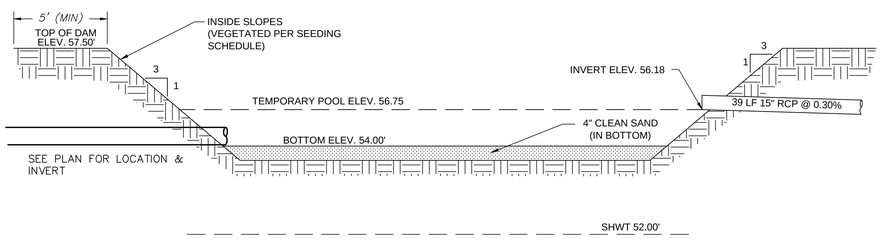

INFILTRATION BASIN #1

NOT TO SCALE

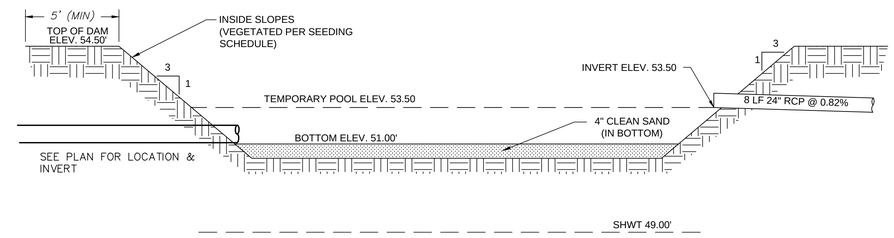

INFILTRATION BASIN #2

NOT TO SCALE

REV.NO.	DESCRIPTIONS	DATE
I	CITY OF WILMINGTON - EARLY GRADING RELEASE SUBMITTAL	7/21/16
H	PERMIT SUBMITTAL SET - COW, NHC	6/24/16
G	PERMIT SUBMITTAL SET - CFPUA, NCDOT, COW, NHC	5/6/16
F	ADDENDUM #1 - REVISIONS TO UTILITY PLAN	4/7/16
E	CITY OF WILMINGTON STORMWATER AND NHC SEDIMENT AND EROSION CONTROL SUBMITTAL	3/24/16
D	CITY OF WILMINGTON SRB SUBMITTAL	3/4/16
C	CITY OF WILMINGTON TRC SUBMITTAL	2/10/16
B	CITY OF WILMINGTON SRB SUBMITTAL	2/2/16
A	CITY OF WILMINGTON CONCEPT TRC SUBMITTAL	11/5/2015

REVISIONS

SEAL

PRELIMINARY PLAN
NOT FOR
CONSTRUCTION

SEAL

NORTH CAROLINA PROFESSIONAL SEAL 038675 ENGINEER TAMARA C. MURPHY

Tamara C. Murphy 7/21/16

McKIM&CREED
243 North Front Street
Wilmington, NC 28401
Phone: (910)343-1048, Fax: (910)251-8282
NC LICENSE F-1222
www.mckimcreed.com

SHIPYARD VILLAGE WILMINGTON, LLC
PO BOX 29169
GREENSBORO, NC 27429-9169

SHIPYARD VILLAGE APARTMENTS
2821 CAROLINA BEACH ROAD
WILMINGTON, NORTH CAROLINA
TOWNSHIP OF WILMINGTON

STORMWATER MANAGEMENT DETAILS

DATE:	21JUL16
MCE PROJ. #	07010-0001
DRAWN	TCM/TSM
DESIGNED	TCM/TSM
CHECKED	RMC
PROJ. MGR.	TSM

SCALE
HORIZONTAL: N/A
VERTICAL: N/A

M&C FILE NUMBER: CN501
DRAWING NUMBER: 22

STATUS: PRELIMINARY PLANS
NOT FOR CONSTRUCTION
REVISION

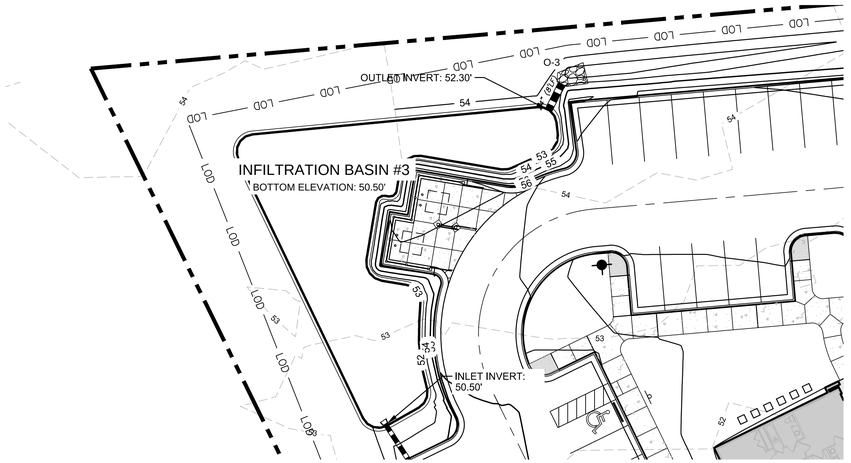

NOTES

1. THE SIDE SLOPES OF THE INFILTRATION BASIN SHALL BE SEEDED PER THE SEEDING SCHEDULE IMMEDIATELY FOLLOWING THE COMPLETION OF CONSTRUCTION.
2. THE BOTTOM SHALL BE OVEREXCAVATED 4" AND BACKFILLED WITH CLEAN SAND TO THE BOTTOM ELEVATION SPECIFIED.
3. IF HARDPAN OR OTHER UNSUITABLE SOILS ARE ENCOUNTERED, OVEREXCAVATE THE BOTTOM A MINIMUM OF 2' AND BACKFILL WITH ENGINEER APPROVED SANDY SOIL MATERIAL.
4. IF THE BASIN IS USED AS AN EROSION CONTROL DEVICE, THE BOTTOM MUST BE COMPLETELY CLEANED OUT, OVEREXCAVED 6" AND BACKFILLED WITH AN ENGINEER APPROVED SANDY SOIL MATERIAL.

20' 0 20' 40'
SCALE: 1"=20' (Horiz.)

N

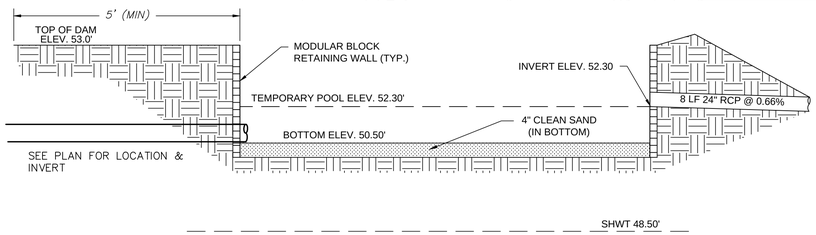

INFILTRATION BASIN #3

NOT TO SCALE

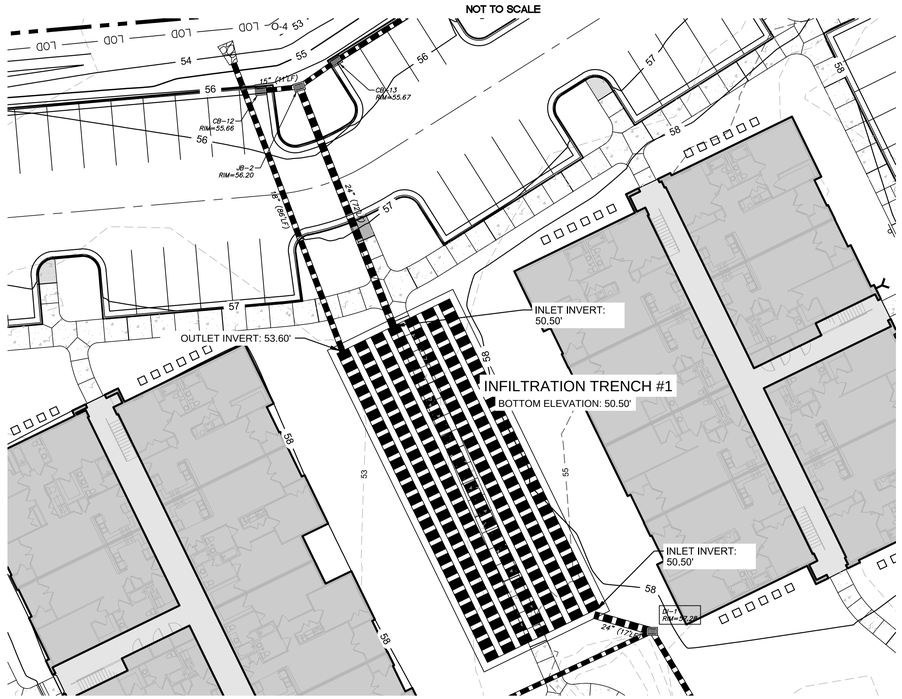

INFILTRATION TRENCH #1

INFILTRATION TRENCH SYSTEM TABLE	
DESIGN	INFILTRATION TRENCH #1
# OF RUNS	7
PIPE DIAMETER (IN)	42"CMP
MIN. X (IN)	1/2 DIA. OF PIPE
MIN. S (IN)	1/2 DIA. OF PIPE
TRENCH WIDTH (FT)	39'
TRENCH LENGTH (FT)	100'
SHWT ELEVATION	48.50'
TRENCH BOTTOM ELEVATION	50.50'
PIPE TRENCH INVERT	51.00'
TRENCH TOP ELEVATION	55.00'
10-YR WSEL	52.49'
25-YR WSEL	53.08'
50-YR WSEL	53.65'
1.5" WSEL	52.23'

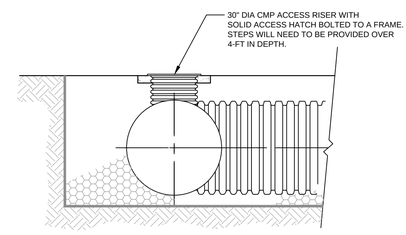

TYP. CMP ACCESS RISER

NOT TO SCALE

NOTES:

1. INFILTRATION TRENCH PIPE SHALL BE CONTECH PERFORATED ALUMINUM CMP PIPE MEETING AASHTO M-36, CLASS 2 PERFORATIONS (3/8" DIA); OR PERFORATED HDPE MEETING AASHTO CLASS 2, TYPE S PERFORATIONS. CONTRACTOR TO SUBMIT INFILTRATION TRENCH SPECIFICATION FOR ENGINEER APPROVAL.
2. CMP OR HDPE PIPE TO BE INSTALLED PER ASTM & MANUFACTURER'S RECOMMENDATIONS. PIPE JOINTS TO BE PER MANUFACTURER'S RECOMMENDATIONS AS AN UNDERGROUND INFILTRATION SYSTEM.
3. SEE TABLE FOR NUMBER OF PIPE RUNS AND DIMENSIONS.
4. IT IS IMPORTANT THAT FILL MATERIAL FOR THE INFILTRATION TRENCHES SHALL BE SAME MATERIAL AS EXISTING SOILS UNDERLYING THE TRENCH. BE SURE NOT TO COMPACT THE SAND UNDER THE TRENCH SO THAT PROPER INFILTRATION RATES CAN OCCUR BELOW THE TRENCHES.
5. SHWT ELEVATIONS TAKEN FROM SITE & SOILS VALUATION REPORT BY ECS CAROLINAS, LLP DATED JANUARY 20, 2016 FOR SHIPYARD VILLAGE WILMINGTON, LLC.
6. EXISTING ELEVATIONS TAKEN FROM TOPOGRAPHY SURVEY BY MCKIM & CREED, INC. DATED APRIL 22, 2014.
7. IF HARDPAN OR OTHER UNSUITABLE SOILS ARE ENCOUNTERED, OVEREXCAVATE THE BOTTOM A MINIMUM OF 2' AND BACKFILL WITH ENGINEER APPROVED SANDY SOIL MATERIAL.

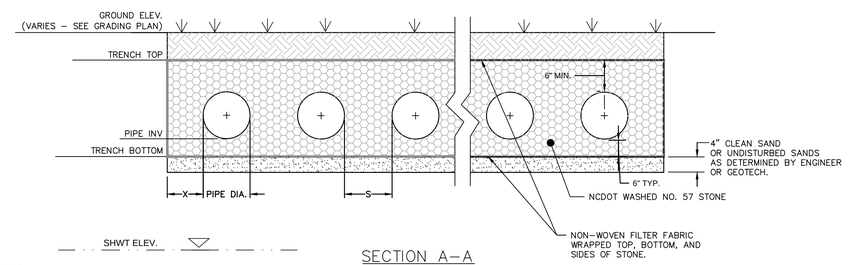

SECTION A–A

NOT TO SCALE

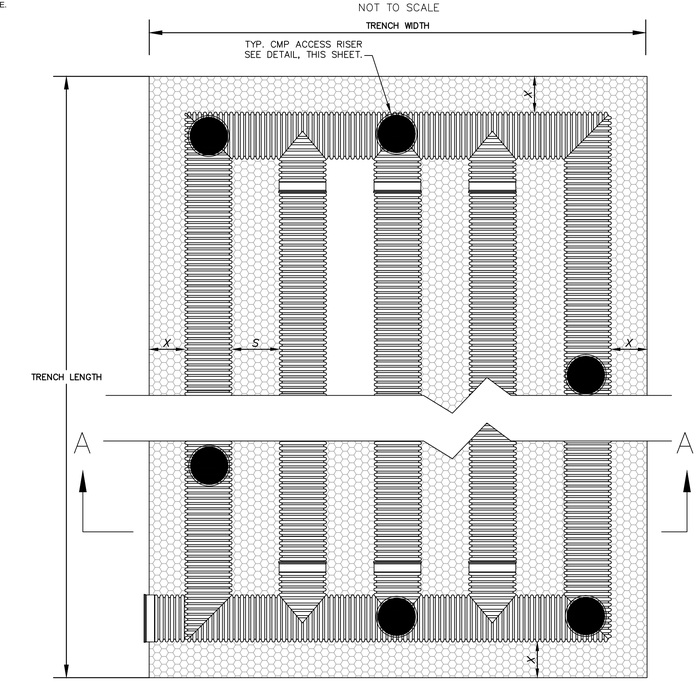

PLAN VIEW

NOT TO SCALE

TYP. INFILTRATION TRENCH SYSTEM

NOT TO SCALE

REV.NO.	DESCRIPTIONS	DATE
I	CITY OF WILMINGTON - EARLY GRADING RELEASE SUBMITTAL	7/21/16
H	PERMIT SUBMITTAL SET - CCW, NHC	6/24/16
G	PERMIT SUBMITTAL SET - CFPUA, NCDOT, CCW, NHC	5/6/16
F	ADDENDUM #1 - REVISIONS TO UTILITY PLAN	4/7/16
E	CITY OF WILMINGTON STORMWATER AND NHC SEDIMENT AND EROSION CONTROL SUBMITTAL	3/24/16
D	CITY OF WILMINGTON SRB SUBMITTAL	3/4/16
C	CITY OF WILMINGTON TRC SUBMITTAL	2/10/16
B	CITY OF WILMINGTON SRB SUBMITTAL	2/2/16
A	CITY OF WILMINGTON CONCEPT TRC SUBMITTAL	11/5/2015

REVISIONS

PRELIMINARY PLAN
NOT FOR
CONSTRUCTION

SEAL
NORTH CAROLINA PROFESSIONAL SEAL 038675 ENGINEER TAMARA C. MURPHY
7/21/16

McKIM&CREED
243 North Front Street
Wilmington, NC 28401
Phone: (910)343-1048, Fax: (910)251-8282
NC LICENSE F-1222
www.mckimcreed.com

SHIPYARD VILLAGE WILMINGTON, LLC
PO BOX 29169
GREENSBORO, NC 27429-9169

SHIPYARD VILLAGE APARTMENTS
2821 CAROLINA BEACH ROAD
WILMINGTON, NORTH CAROLINA
TOWNSHIP OF WILMINGTON

STORMWATER MANAGEMENT DETAILS

DATE:	21JUL16
MCE PROJ. #	07010-0001
DRAWN	TCM/TSM
DESIGNED	TCM/TSM
CHECKED	RMC
PROJ. MGR.	TSM

SCALE
HORIZONTAL: N/A
VERTICAL: N/A

M&C FILE NUMBER CN502
DRAWING NUMBER 23

STATUS: PRELIMINARY PLANS
NOT FOR CONSTRUCTION
REVISION

STATE OF NORTH CAROLINA DEPT. OF TRANSPORTATION DIVISION OF HIGHWAYS RALEIGH, N.C.

1-12

ENGLISH STANDARD DRAWING FOR **DROP INLET FRAME AND GRATES** FOR USE WITH STD. DWG.S 840.14 AND 840.15

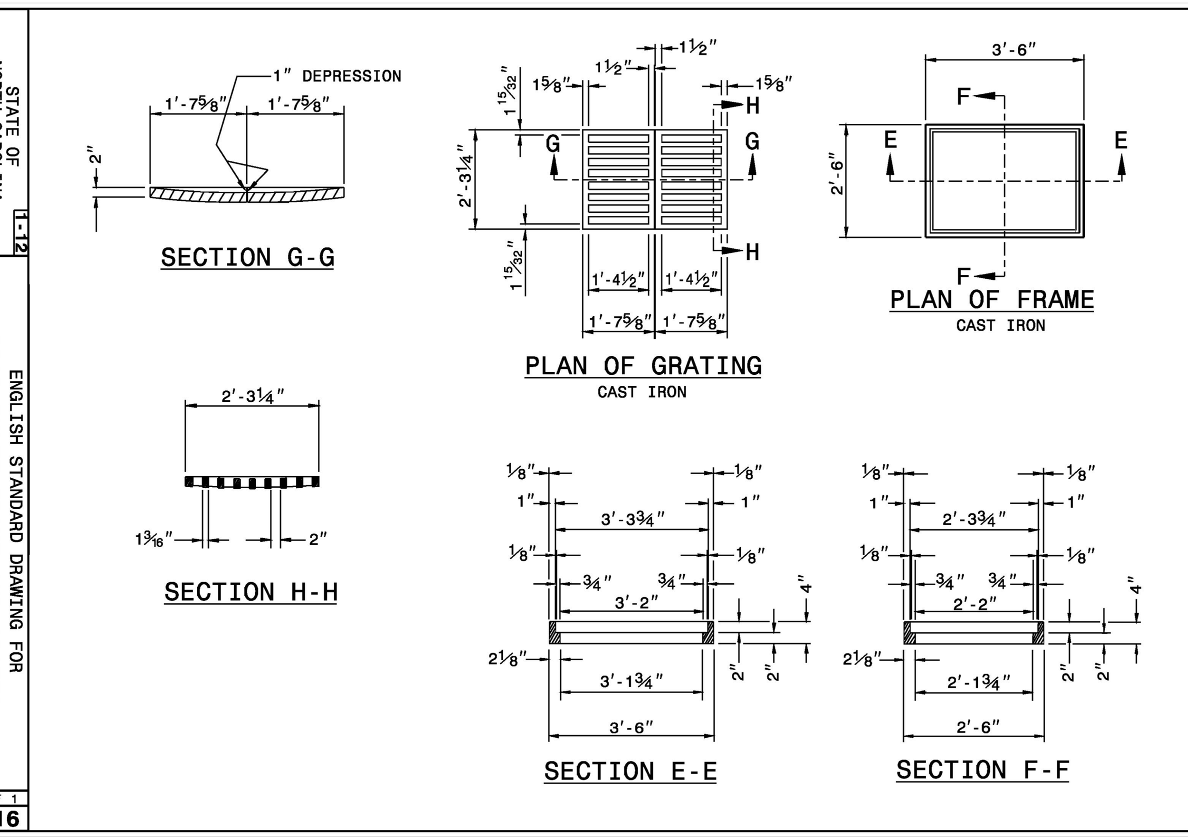

SHEET 1 OF 1
840.16

STATE OF NORTH CAROLINA DEPT. OF TRANSPORTATION DIVISION OF HIGHWAYS RALEIGH, N.C.

7-06

ENGLISH STANDARD DRAWING FOR **FRAME, GRATES, AND HOOD** FOR USE ON STANDARD CATCH BASIN

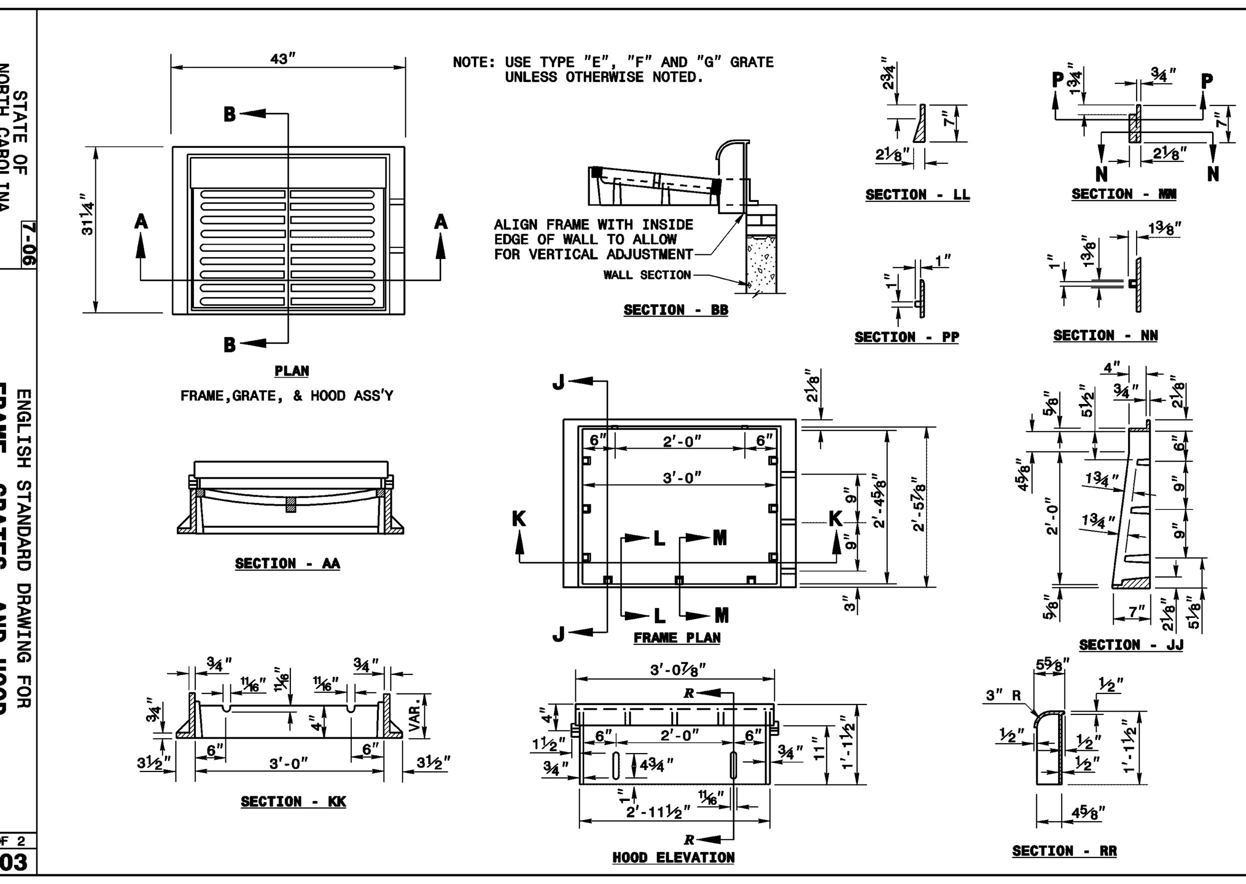

SHEET 1 OF 2
840.03

STATE OF NORTH CAROLINA DEPT. OF TRANSPORTATION DIVISION OF HIGHWAYS RALEIGH, N.C.

7-06

ENGLISH STANDARD DRAWING FOR **CONCRETE DROP INLET** 12" THRU 30" PIPE

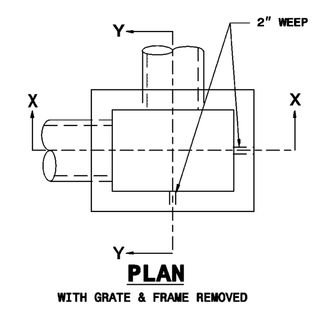

GENERAL NOTES:

USE CLASS "B" CONCRETE THROUGHOUT.

PROVIDE ALL DROP INLETS OVER 3'-6" IN DEPTH WITH STEPS 12" ON CENTER. USE STEPS WHICH COMPLY WITH STD. DRAWING 840.66.

OPTIONAL CONSTRUCTION - MONOLITHIC POUR 2" KEYWAY OR #4 BAR DOWELS AT 12" CENTERS AS DIRECTED BY THE ENGINEER.

USE FORMS FOR THE CONSTRUCTION OF THE BOTTOM SLAB.

IF REINFORCED CONCRETE PIPE IS SET IN BOTTOM SLAB OF BOX, ADD TO SLAB AS SHOWN ON STD. NO. 840.00.

CONSTRUCT WITH PIPE CROWNS MATCHING.

INSTALL 2" WEEPHOLES AS DIRECTED BY THE ENGINEER.

INSTALL STONE DRAINS, OF A MINIMUM OF 1 CUBIC FOOT OF NO. 78M STONE IN A POROUS FABRIC BAG OR WRAP, AT EACH WEEP HOLE OR AS DIRECTED BY THE ENGINEER.

CHAMFER ALL EXPOSED CORNERS 1".

DRAWING NOT TO SCALE.

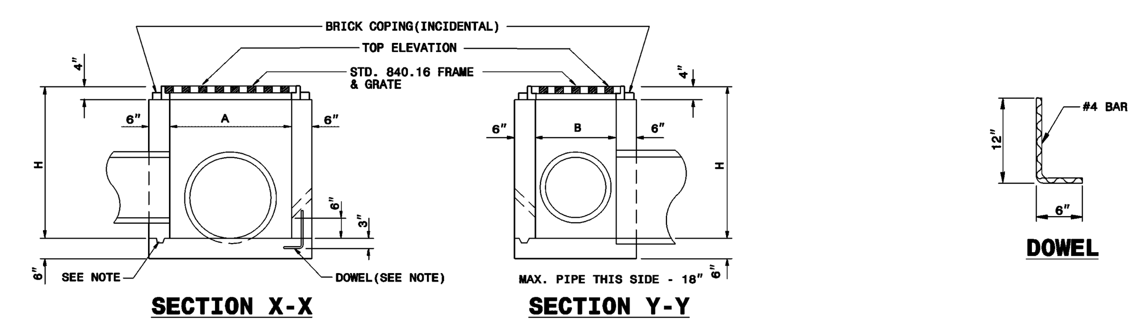

DIMENSIONS AND QUANTITIES FOR DROP INLET(BASED ON MIN. HEIGHT, H)

DIMENSIONS OF BOX & PIPE				CUBIC YARDS CONC. IN BOX			DEDUCTIONS FOR ONE PIPE	
PIPE	SPAN	WIDTH	MIN. HEIGHT					
D	A	B	H	BOTTOM SLAB	WALL PER FT. HT.	TOTAL CONCRETE FOR MINIMUM HEIGHT, H	C.M.	R.C.
12"	3'-0"	2'-0"	2'-0"	0.222	0.222	0.592	0.015	0.026
15"	/	/	2'-3"	/	/	0.648	0.023	0.036
18"	/	/	2'-6"	/	/	0.703	0.033	0.049
24"	/	/	3'-0"	/	/	0.814	0.059	0.085
30"	3'-0"	2'-0"	3'-6"	0.222	0.222	0.925	0.092	0.127

SHEET 1 OF 1
840.14

STATE OF NORTH CAROLINA DEPT. OF TRANSPORTATION DIVISION OF HIGHWAYS RALEIGH, N.C.

7-06

ENGLISH STANDARD DRAWING FOR **CONCRETE CATCH BASIN** 12" THRU 54" PIPE

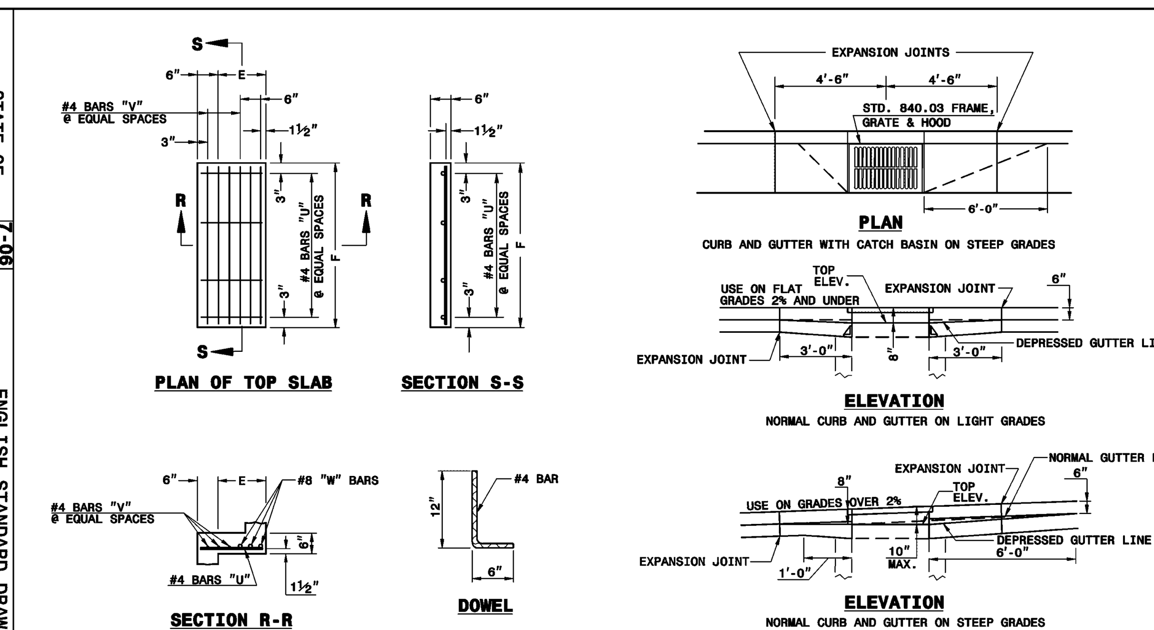

MINIMUM DIMENSIONS AND QUANTITIES FOR CONCRETE CATCH BASIN(BASED ON MIN. HEIGHT, H, WITH NO RISER) *

DIMENSIONS OF BOX AND PIPE						COVER DIMENSION		BARS-U		BARS-V		BARS-W		TOTAL LBS.	CU.YDS. CONC. IN BOX			DEDUCTIONS ONE PIPE	
PIPE	SPAN	WIDTH	WIDTH	SPAN	MIN. HEIGHT										TOP SLAB	BOTTOM SLAB	TOT. CONC. FOR MINIMUM HEIGHT, H		
D	A	B	C	G	H	E	F	NO.	LENGTH	NO.	LENGTH	NO.	LENGTH					C.M.	R.C.
12"	3'-0"	2'-2"	--	--	2'-9"	--	--	--	--	--	--	--	--	--	--	0.235	0.772	0.015	0.026
15"	3'-0"	2'-2"			3'-0"											0.235	0.829	0.023	0.036
18"	3'-0"	2'-2"			3'-3"											0.235	0.887	0.033	0.049
24"	3'-0"	2'-2"			3'-9"											0.235	1.001	0.059	0.085
30"	3'-0"	2'-2"	3'-4"		4'-3"	1'-2"	4'-0"	4	1'-5"	2	3'-9"	3	3'-9"	39	0.123	0.321	1.433	0.092	0.127
36"	3'-0"	2'-2"	3'-10"		4'-9"	1'-8"	4'-0"	4	1'-11"	3	3'-9"	3	3'-9"	43	0.161	0.358	1.714	0.132	0.178
42"	3'-0"	2'-2"		4'-5"	5'-3"	1'-5"	3'-2"	4	1'-8"	2	2'-11"	3	2'-11"	32	0.112	0.318	1.738	0.180	0.243
48"	3'-0"	2'-2"		5'-0"	5'-9"	2'-0"	3'-2"	4	2'-3"	3	2'-11"	3	2'-11"	35	0.145	0.352	2.052	0.235	0.317
54"	3'-0"	2'-2"		5'-7"	6'-3"	2'-7"	3'-2"	4	2'-10"	5	2'-11"	3	2'-11"	41	0.180	0.386	2.387	0.297	0.401

* RISER HAS .228 CUBIC YARDS OF CONCRETE PER FOOT HEIGHT

SHEET 2 OF 2
840.02

STATE OF NORTH CAROLINA DEPT. OF TRANSPORTATION DIVISION OF HIGHWAYS RALEIGH, N.C.

7-06

ENGLISH STANDARD DRAWING FOR **BRICK JUNCTION BOX** (WITH OPTIONAL MANHOLE) 12" THRU 66" PIPE

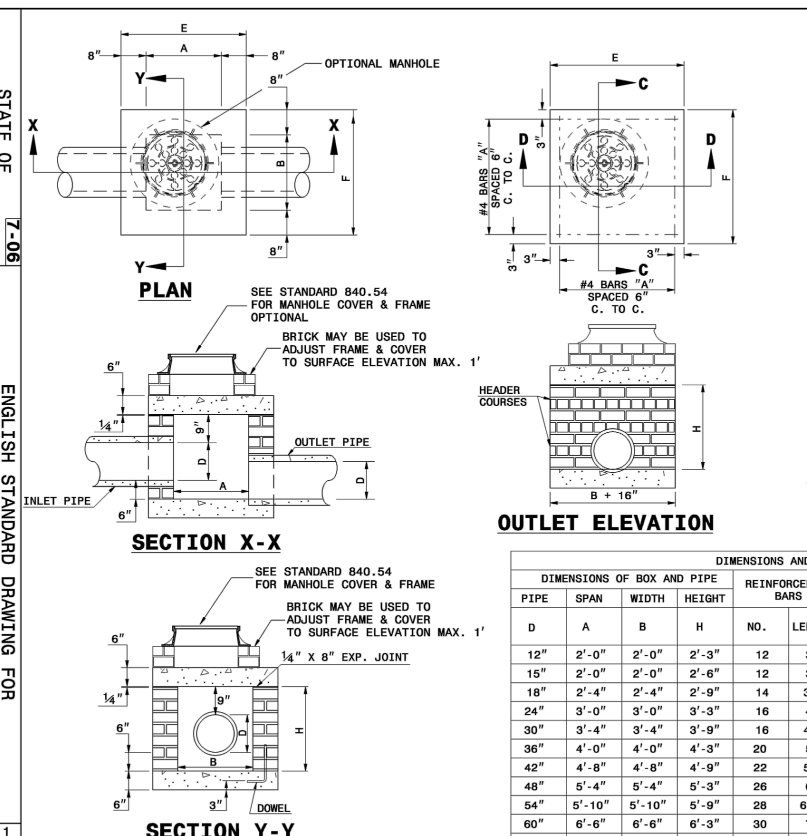

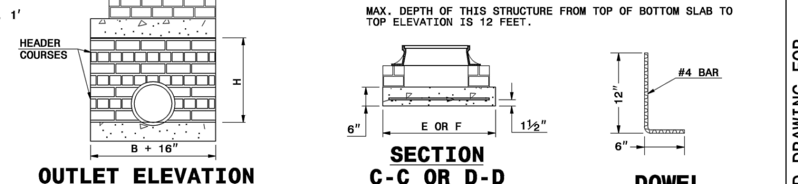

GENERAL NOTES:

CHAMFER ALL EXPOSED CORNERS 1".

USE CLASS "B" CONCRETE THROUGHOUT.

USE #4 BAR DOWELS AT 12" CENTERS.

MORTAR JOINTS ½" ± ⅛" THICK.

CONCAVE TOO ALL EXPOSED JOINTS.

USE FORMS TO CONSTRUCT THE BOTTOM SLAB.

JUMBO BRICK WILL BE PERMITTED. CONCRETE BRICK OR 4" SOLID CONCRETE BLOCKS MAY BE USED IN LIEU OF CLAY BRICK.

FOR 8'-0" IN HEIGHT OR LESS, USE 8" WALL. OVER 8'-0" IN HEIGHT, USE 12" WALL TO 6'-0" FROM TOP OF WALL, AND 8" WALL FOR THE REMAINING 6'-0". ADJUST DIMENSIONS AND QUANTITIES ACCORDINGLY.

IF REINFORCED CONCRETE PIPE IS SET IN BASE SLAB OF BOX, ADD TO BASE AS SHOWN ON STANDARD NO. 840.00.

PROVIDE ALL JUNCTION BOXES OVER 3'-6" IN DEPTH WITH STEPS 12" ON CENTERS IN ACCORDANCE WITH STD. NO. 840.66.

ADJUST THE STEEL, CONCRETE AND BRICK MASONRY QUANTITIES TO INCLUDE THE ADDITION OF THE MANHOLE (I.E. DIAGONAL BARS SHORTENED AROUND OPENING IN TOP SLAB, ADDITIONAL VARIABLE HEIGHT BRICK MASONRY, OPENING IN TOP SLAB.)

MAX. DEPTH OF THIS STRUCTURE FROM TOP OF BOTTOM SLAB TO TOP ELEVATION IS 12 FEET.

DIMENSIONS AND QUANTITIES FOR BRICK JUNCTION BOXES

DIMENSIONS OF BOX AND PIPE				REINFORCEMENT BARS		TOP SLAB DIMENSIONS		CUBIC YARDS			DEDUCTIONS FOR ONE PIPE CU.YDS.	
PIPE	SPAN	WIDTH	HEIGHT					CONC.	BRICK MASONRY			
D	A	B	H	NO.	LENGTH	E	F	TOP & BOTTOM CU. YD.	MIN. HEIGHT CU. YD.	WALL PER FT. HT. CU. YD.	C.S.	R.C.
12"	2'-0"	2'-0"	2'-3"	12	3'-1"	3'-4"	3'-4"	0.412	0.591	0.263	0.020	0.032
15"	2'-0"	2'-0"	2'-6"	12	3'-1"	3'-4"	3'-4"	0.412	0.657	0.263	0.031	0.047
18"	2'-4"	2'-4"	2'-9"	14	3'-5"	3'-8"	3'-8"	0.498	0.814	0.296	0.044	0.065
24"	3'-0"	3'-0"	3'-3"	16	4'-1"	4'-4"	4'-4"	0.695	1.176	0.362	0.078	0.113
30"	3'-4"	3'-4"	3'-9"	16	4'-5"	4'-8"	4'-8"	0.807	1.481	0.395	0.122	0.170
36"	4'-0"	4'-0"	4'-3"	20	5'-1"	5'-4"	5'-4"	1.053	1.959	0.461	0.176	0.238
42"	4'-8"	4'-8"	4'-9"	22	5'-9"	6'-0"	6'-0"	1.333	2.503	0.527	0.240	0.323
48"	5'-4"	5'-4"	5'-3"	26	6'-5"	6'-8"	6'-8"	1.646	2.940	0.560	0.313	0.422
54"	5'-10"	5'-10"	5'-9"	28	6'-11"	7'-2"	7'-2"	1.902	3.502	0.609	0.396	0.535
60"	6'-6"	6'-6"	6'-3"	30	7'-7"	7'-10"	7'-10"	2.272	4.113	0.658	0.489	0.660
66"	7'-1"	7'-1"	6'-9"	32	8'-2"	8'-5"	8'-5"	2.624	4.778	0.708	0.591	0.798

SHEET 1 OF 1
840.32

STATE OF NORTH CAROLINA DEPT. OF TRANSPORTATION DIVISION OF HIGHWAYS RALEIGH, N.C.

7-06

ENGLISH STANDARD DRAWING FOR **FRAME, GRATES, AND HOOD** FOR USE ON STANDARD CATCH BASIN

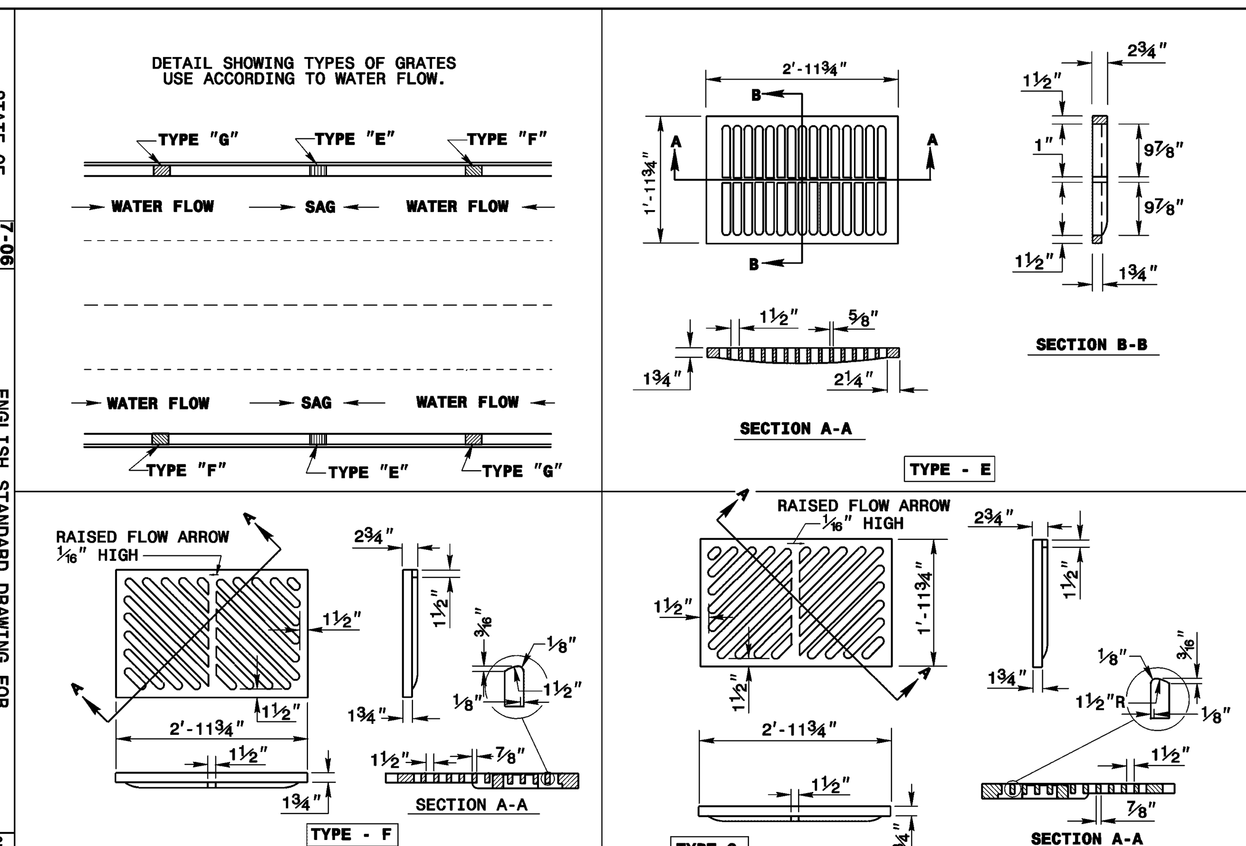

SHEET 2 OF 2
840.03

STATE OF NORTH CAROLINA DEPT. OF TRANSPORTATION DIVISION OF HIGHWAYS RALEIGH, N.C.

7-06

ENGLISH STANDARD DRAWING FOR **CONCRETE CATCH BASIN** 12" THRU 54" PIPE

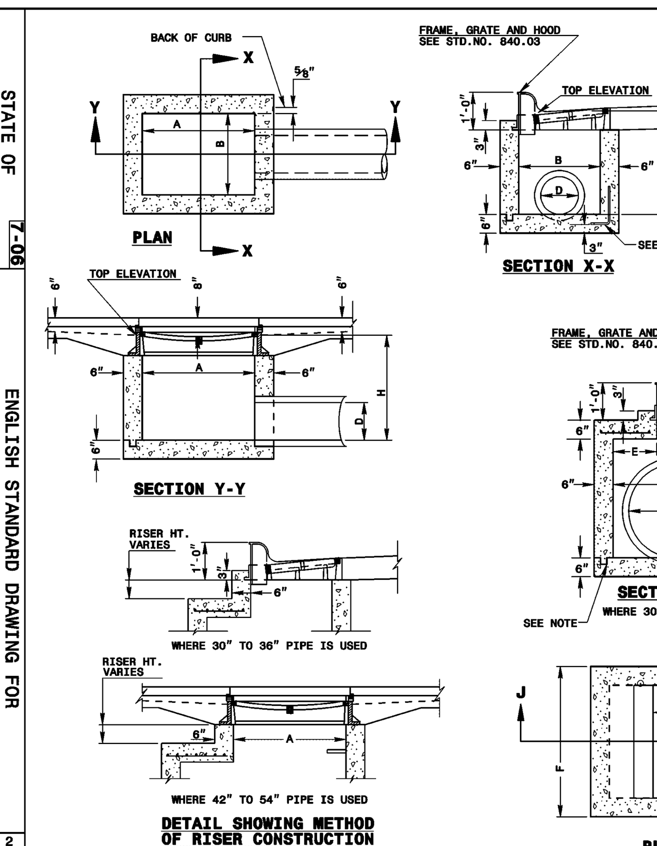

GENERAL NOTES:

USE CLASS "B" CONCRETE THROUGHOUT.

PROVIDE ALL CATCH BASINS OVER 3'-6" IN DEPTH WITH STEPS 12" ON CENTER. USE STEPS WHICH COMPLY WITH STD. DRAWING 840.66.

OPTIONAL CONSTRUCTION - MONOLITHIC POUR, 2" KEYWAY, OR #4 BAR DOWELS AT 12" CENTERS AS DIRECTED BY THE ENGINEER.

USE FORMS FOR THE CONSTRUCTION OF THE BOTTOM SLAB.

IF REINFORCED CONCRETE PIPE IS SET IN BOTTOM SLAB OF BOX, ADD TO SLAB AS SHOWN ON STD. NO. 840.00.

USE TYPE "E", "F" AND "G" GRATES UNLESS OTHERWISE INDICATED.

FOR 8'-0" IN HEIGHT OR LESS USE 6" WALLS AND BOTTOM SLAB. OVER 8'-0" TO 16'-0" IN HEIGHT USE 8" WALLS AND BOTTOM SLAB. ADJUST QUANTITIES ACCORDINGLY.

CONSTRUCT WITH PIPE CROWNS MATCHING.

CHAMFER ALL EXPOSED CORNERS 1".

DRAWING NOT TO SCALE.

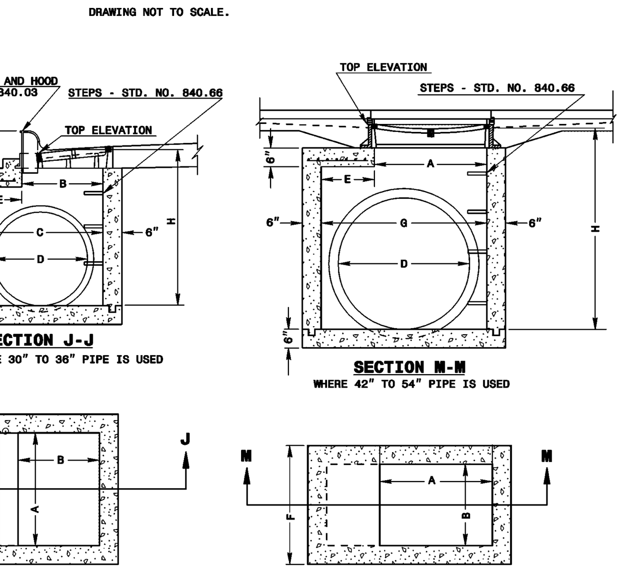

SHEET 1 OF 2
840.02

REV.NO.	DESCRIPTIONS	DATE
I	CITY OF WILMINGTON - EARLY GRADING RELEASE SUBMITTAL	7/21/16
H	PERMIT SUBMITTAL SET - COW, NHC	6/24/16
G	PERMIT SUBMITTAL SET - CFPUA, NCDOT, COW, NHC	5/6/16
F	ADDENDUM #1 - REVISIONS TO UTILITY PLAN	4/7/16
E	CITY OF WILMINGTON STORMWATER AND NHC SEDIMENT AND EROSION CONTROL SUBMITTAL	3/24/16
D	CITY OF WILMINGTON SRB SUBMITTAL	3/4/16
C	CITY OF WILMINGTON TRC SUBMITTAL	2/10/16
B	CITY OF WILMINGTON SRB SUBMITTAL	2/2/16
A	CITY OF WILMINGTON CONCEPT TRC SUBMITTAL	11/5/2015

REVISIONS

SEAL

PRELIMINARY PLAN NOT FOR CONSTRUCTION

SEAL

NORTH CAROLINA PROFESSIONAL ENGINEER SEAL 038675 TAMARA C. MURPHY 7/21/16

McKIM&CREED
243 North Front Street
Wilmington, NC 28401
Phone: (910)343-1048, Fax: (910)251-8282
NC LICENSE F-1222
www.mckimcreed.com

SHIPYARD VILLAGE WILMINGTON, LLC
PO BOX 29169
GREENSBORO, NC 27429-9169

SHIPYARD VILLAGE APARTMENTS
2821 CAROLINA BEACH ROAD
WILMINGTON, NORTH CAROLINA
TOWNSHIP OF WILMINGTON

GRADING & DRAINAGE DETAILS

DATE:	21JUL16
MCE PROJ. #	07010-0001
DRAWN	TCM/TSM
DESIGNED	TCM/TSM
CHECKED	RMC
PROJ. MGR.	TSM

SCALE
HORIZONTAL:
VERTICAL:

M&C FILE NUMBER CG501
DRAWING NUMBER 24

STATUS: PRELIMINARY PLANS NOT FOR CONSTRUCTION
REVISION

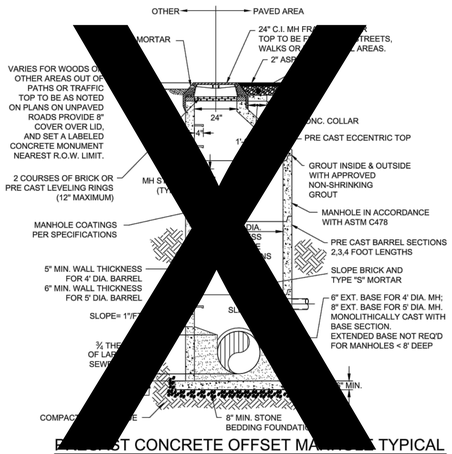

ST CONCRETE OFFSET MA TYPICAL

(LESS THAN 30" DROP)
NOT TO SCALE

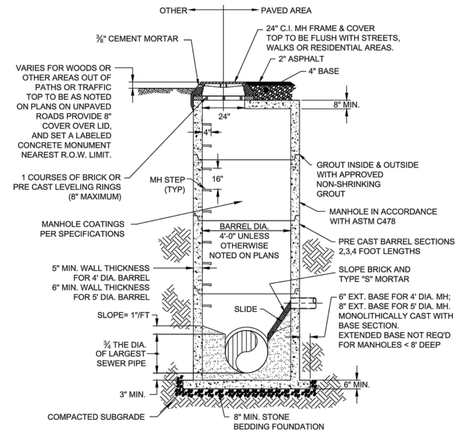

PRECAST CONCRETE FLAT TOP MANHOLE TYPICAL

(LESS THAN 30" DROP)
NOT TO SCALE

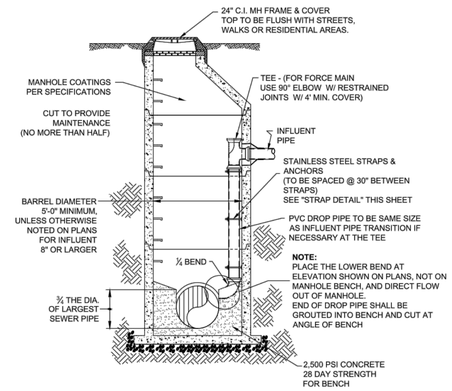

DROP MANHOLE

(MORE THAN 30" DROP)
NOT TO SCALE

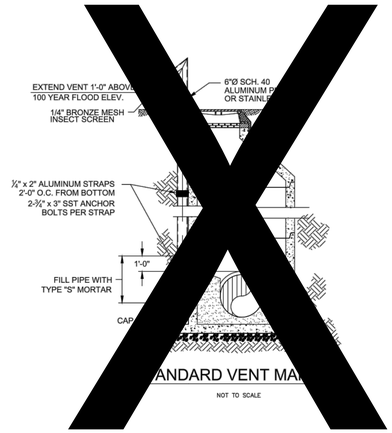

ANDARD VENT MA

NOT TO SCALE

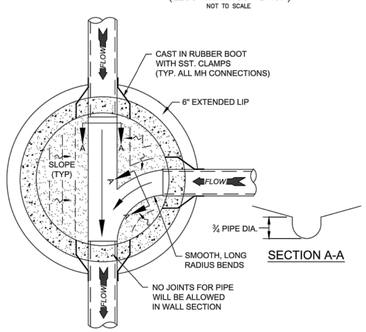

SECTION A-A

MANHOLE FLOOR PLAN

NOT TO SCALE

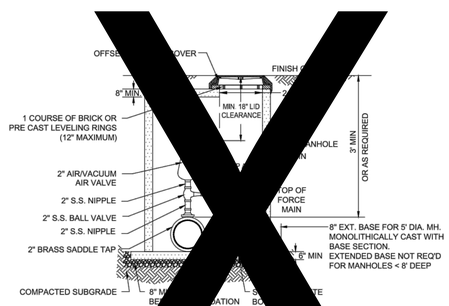

NOTES:
1. CONTRACTOR TO INSTALL HOLE AT SUFFICIEN LOW FOR ACCESS.
2. FORCE MAIN TO BE OFFS LE TO KEEP AREA BELO
3. REFER TO SPECIFICAT TIONAL DETAILS.
4. USE CAST IN RUBBER ST. CLAMPS FOR ALL MH CON LUDING FORCE MAIN.

VACUUM AND AIR SE COMBINATION VAL

NOT TO SCALE

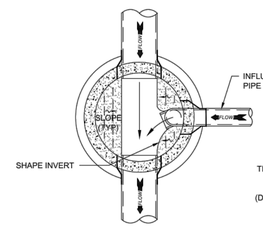

DROP MANHOLE FLOOR PLAN

NOT TO SCALE

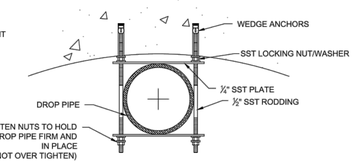

NOTE: ALL PARTS TO BE SST.

STRAP DETAIL

NOT TO SCALE

CAPE FEAR PUBLIC UTILITY AUTHORITY STANDARD SEWER NOTES:

1. SEWER GUARDS REQUIRED AT ALL MANHOLES. STAINLESS STEEL SEWER GUARDS REQUIRED AT MANHOLES LOCATED IN TRAFFIC AREAS.
2. SERVICES SHALL BE PERPENDICULAR TO MAIN AND TERMINATE AT RIGHT-OF-WAY LINE. SERVICES IN CUL-DE-SACS ARE REQUIRED TO BE PERPENDICULAR, OR MUST ORIGINATE IN MANHOLE AND TERMINATE AT RIGHT-OF-WAY LINE.
3. ALL SERVICES TYING INTO DUCTILE IRON MAINS SHALL BE CONSTRUCTED OF CLASS 50, DIP, WITH PROTECTO 401 CERAMIC EPOXY LINING.
4. MINIMUM 10' UTILITIES EASEMENT PROVIDED ALONG THE FRONTAGE OF ALL LOTS AND AS SHOWN FOR NEW DEVELOPMENTS.
5. NO FLEXIBLE COUPLINGS SHALL BE USED.
6. ALL STAINLESS STEEL FASTENERS SHALL BE 316.

STANDARD SEWER NOTES

(REQUIRED ON ALL SEWER PLAN AND PROFILE SHEETS)

GENERAL NOTES:

1. NO EXCAVATED MATERIAL SHALL BE PLACED IN ANY STREAM, DITCH OR DRAINAGE-WAY.
2. THE CONTRACTOR IS RESPONSIBLE FOR LOCATING ALL UNDERGROUND UTILITIES BEFORE ANY CONSTRUCTION BEGINS.
3. THE CONTRACTOR IS RESPONSIBLE FOR TEMPORARY SEDIMENT AND EROSION CONTROL MEASURES WHILE CONSTRUCTION IS IN PROGRESS.
4. THE CONTRACTOR IS RESPONSIBLE FOR STABILIZATION OF ALL DISTURBED AREAS.
5. THE CONTRACTOR IS RESPONSIBLE FOR LAY DOWN & STOCKPILE AREAS (TO ARRANGE AND INSURE COMPLIANCE WITH ALL LOCAL AND STATE REGULATIONS).

THE DETAILS SHOWN HEREON SUPERCEDE CFPUA WRITTEN TECHNICAL SPECIFICATIONS VERSIONS 1.00 - 1.04

REV:	DESCRIPTION:	DATE:
1	AIR / VACUUM AND AIR RELEASE COMBINATION VALVE REVISED	10/26/12
2	STANDARD SEWER NOTE #6 REVISED	12/10/12

CFPUA SANITARY SEWER

STANDARD DETAILS

CAPE FEAR PUBLIC UTILITY AUTHORITY
235 GOVERNMENT CENTER DRIVE
WILMINGTON, NC 28403
OFFICE: (910)332-6560
Stewardship. Sustainability. Service.

DATE: 1/9/12
SCALE: N/A
DRAWN BY: CFPUA
CHECKED BY: CFPUA
PROJECT NO. :

SHEET NO: SSD-1

REV.NO.	DESCRIPTIONS	DATE
I	CITY OF WILMINGTON - EARLY GRADING RELEASE SUBMITTAL	7/21/16
H	PERMIT SUBMITTAL SET - COW, NHC	6/24/16
G	PERMIT SUBMITTAL SET - CFPUA, NCDOT, COW, NHC	5/6/16
F	ADDENDUM #1 - REVISIONS TO UTILITY PLAN	4/7/16
E	CITY OF WILMINGTON STORMWATER AND NHC SEDIMENT AND EROSION CONTROL SUBMITTAL	3/24/16
D	CITY OF WILMINGTON SRB SUBMITTAL	3/4/16
C	CITY OF WILMINGTON TRC SUBMITTAL	2/10/16
B	CITY OF WILMINGTON SRB SUBMITTAL	2/2/16
A	CITY OF WILMINGTON CONCEPT TRC SUBMITTAL	11/5/2015

REVISIONS

SEAL
PRELIMINARY PLAN
NOT FOR
CONSTRUCTION

SEAL
NORTH CAROLINA
PROFESSIONAL
SEAL
038675
ENGINEER
TAMARA C. MURPHY
7/21/16

McKIM&CREED
243 North Front Street
Wilmington, NC 28401
Phone: (910)343-1048, Fax: (910)251-8282
NC LICENSE F-1222
www.mckimcreed.com

SHIPYARD VILLAGE WILMINGTON, LLC
PO BOX 29169
GREENSBORO, NC 27429-9169

SHIPYARD VILLAGE APARTMENTS
2821 CAROLINA BEACH ROAD
WILMINGTON, NORTH CAROLINA
TOWNSHIP OF WILMINGTON

UTILITY DETAILS

DATE:	21JUL16
MCE PROJ. #	07010-0001
DRAWN	TCM/TSM
DESIGNED	TCM/TSM
CHECKED	RMC
PROJ. MGR.	TSM

SCALE
HORIZONTAL: N/A
VERTICAL: N/A

M&C FILE NUMBER CU501
DRAWING NUMBER 25

STATUS: PRELIMINARY PLANS
NOT FOR CONSTRUCTION
REVISION

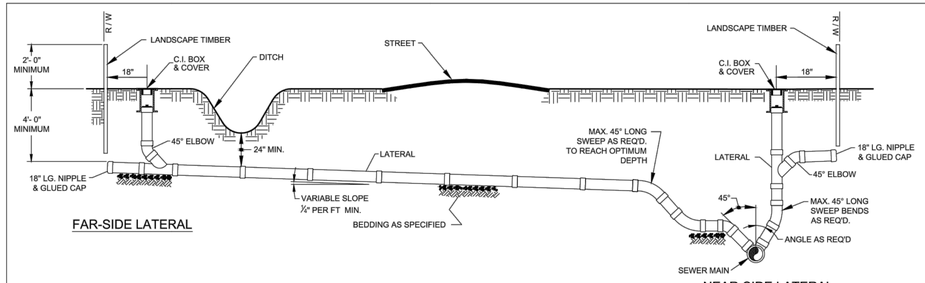

FAR-SIDE LATERAL

NEAR-SIDE LATERAL WITH RIGHT-OF-WAY RESTRICTIONS

NOTE: FOR PRIVATE 8" SERVICES, MANHOLES ARE REQUIRED FOR TIE–IN TO MAIN

STANDARD SERVICE CONNECTION TO SANITARY SEWER

NOT TO SCALE

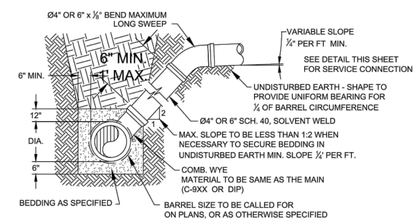

NOTE: FOR PRIVATE 8" SERVICES, MANHOLES ARE REQUIRED FOR TIE–IN TO MAIN

STANDARD SERVICE LATERAL

(MAIN DEPTH LESS THAN 8ft)

NOT TO SCALE

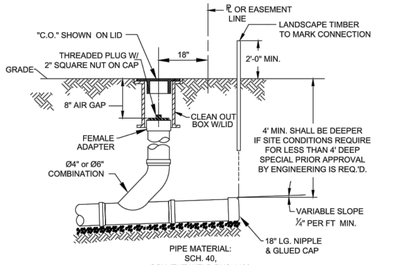

NOTE: FOR PRIVATE 8" SERVICES, MANHOLES ARE REQUIRED FOR TIE–IN TO MAIN

SERVICE CONNECTION & CLEAN-OUT

NOT TO SCALE

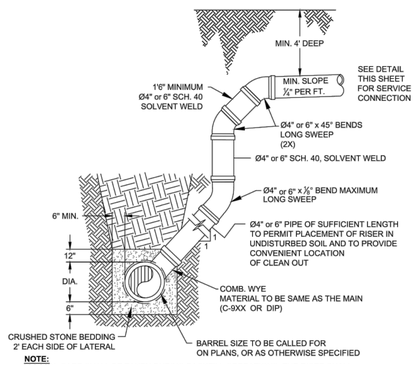

NOTE:
SPECIAL CARE SHALL BE TAKEN DURING BACKFILL OPERATIONS. THE RISER SHALL BE PLUMB AND TRUE AT ALL TIMES, AND REST ON FIRM, STABLE FOUNDATION.

FOR PRIVATE 8" SERVICES, MANHOLES ARE REQUIRED FOR TIE–IN TO MAIN

DEEP SERVICE LATERAL

(MAIN DEPTH GREATER THAN 8ft)

NOT TO SCALE

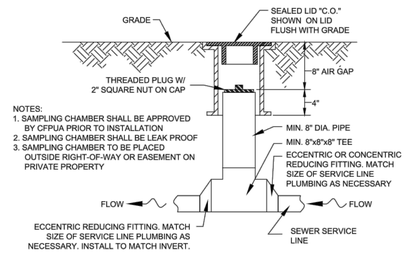

NOTES:
1. SAMPLING CHAMBER SHALL BE APPROVED BY CFPUA PRIOR TO INSTALLATION
2. SAMPLING CHAMBER SHALL BE LEAK PROOF
3. SAMPLING CHAMBER TO BE PLACED OUTSIDE RIGHT-OF-WAY OR EASEMENT ON PRIVATE PROPERTY

SAMPLING CHAMBER

NOT TO SCALE

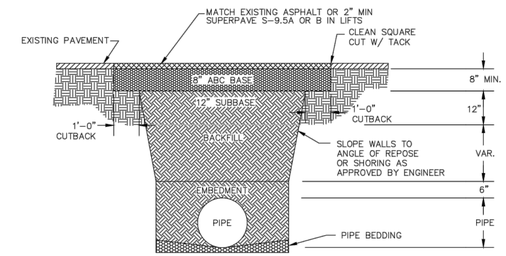

NOTES:
1. BACKFILL SHALL BE SUITABLE MATERIAL THAT IS FREE FROM HEAVY CLAY, GUMBOS, DEBRIS, ORGANICS AND LITTLE TO NO EXCESSIVE MOISTURE.
2. SELECT BACKFILL MAY BE SUBSTITUTED OR REQUIRED BY CITY TO ACHIEVE COMPACTION, (I.E. #57, ABC, CRUSHED LIMESTONE, CLEAN SAND, FLOWABLE FILL, ETC).
3. 8–INCH OF ABC BASE MATERIAL SHALL BE USED ON CITY STREETS.
4. BACKFILL AND BASE MATERIALS SHALL BE COMPACTED 12" MINIMUM LIFTS
5. SOIL SHALL BE COMPACTED BY A MECHANIZED TAMPER (I.E. JUMPING JACK), HOWEVER, VIBRATORY ROLLERS > 18" WIDTH MAY BE USED FOR LARGER EXCAVATIONS. THE PLATE TAMP METHOD SHALL NOT BE USED.
6. ALL APPROVED CASTINGS SHALL BE SET FLUSH TO GRADE AND SUPPORTED IF APPLICABLE.
7. ABC BASE AND SUBBASE COMPACTED TO 98% AND BACKFILL AND EMBEDMENT COMPACTED TO 90% AS DETERMINED BY THE MODIFIED PROCTOR AASHTO METHOD T–99.
8. 1–FOOT CUTBACKS OF ASPHALT SHALL BE PREPARED ON UNDISTURBED SOIL. MINIMUM ASPHALT DENSITY IS 90%.

PAVEMENT REPAIR WHERE PIPE INSTALLED

(FOR PRIVATE ROADS AND PAVED AREAS;
CONTRACTOR TO MEET MIN. REQUIREMENTS AS DEFINED BY
RIGHT-OF-WAY OWNER FOR PUBLIC ROAD REPAIRS)

NOT TO SCALE

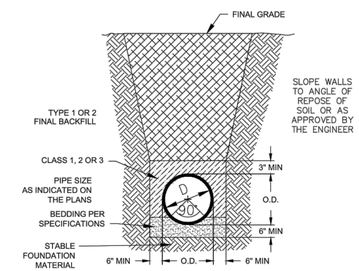

CL 50 DUCTILE IRON DR 18 PVC PIPE TRENCH DETAIL

NOT TO SCALE

NOTE:
PAVEMENT WIDTH AND LOCATION IN R/W VARIES. SEE PLAN FOR INDIVIDUAL LOCATION.

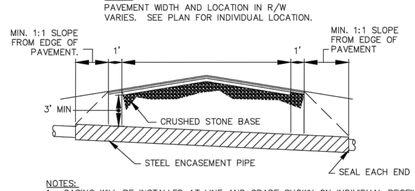

NOTES:
1. CASING WILL BE INSTALLED AT LINE AND GRADE SHOWN ON INDIVIDUAL PROFILE FOR EACH CROSSING. BORING/JACKING TO LINE AND GRADE IS REQUIRED.
2. TRACER WIRE SHALL BE CONTINUED THROUGH CASING

TYPICAL BORING/JACKING DETAIL

NOT TO SCALE

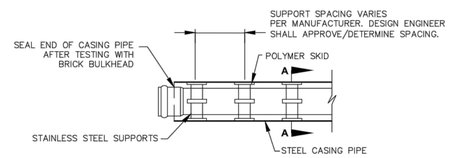

NOTE: PIPE SUPPORT TO BE PLACED TO PROVIDE PROPER SUPPORT, ALIGNMENT, AND GRADE AS SPECIFIED. CONTINUOUS SUPPORTS MAY BE USED AS ALTERNATIVE. OIL, GREASE, OR PETROLEUM PRODUCT MAY NOT BE USED AS LUBRICANT.

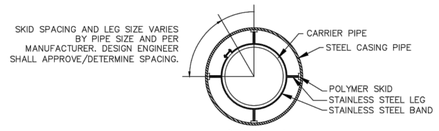

SECTION A-A

NOT TO SCALE

PIPE CASING SUPPORT DETAIL

NOT TO SCALE

GENERAL NOTES:

1. NO EXCAVATED MATERIAL SHALL BE PLACED IN ANY STREAM, DITCH OR DRAINAGE-WAY.
2. THE CONTRACTOR IS RESPONSIBLE FOR LOCATING ALL UNDERGROUND UTILITIES BEFORE ANY CONSTRUCTION BEGINS.
3. THE CONTRACTOR IS RESPONSIBLE FOR TEMPORARY SEDIMENT AND EROSION CONTROL MEASURES WHILE CONSTRUCTION IS IN PROGRESS.
4. THE CONTRACTOR IS RESPONSIBLE FOR STABILIZATION OF ALL DISTURBED AREAS.
5. THE CONTRACTOR IS RESPONSIBLE FOR LAY DOWN & STOCKPILE AREAS (TO ARRANGE AND INSURE COMPLIANCE WITH ALL LOCAL AND STATE REGULATIONS).

THE DETAILS SHOWN HEREON SUPERCEDE CFPUA WRITTEN TECHNICAL SPECIFICATIONS VERSIONS 1.00 - 1.04

REV:	DESCRIPTION:	DATE:
1	SAMPLING CHAMBER REVISED	10/26/12

CFPUA SANITARY SEWER

STANDARD DETAILS

CAPE FEAR PUBLIC UTILITY AUTHORITY
235 GOVERNMENT CENTER DRIVE
WILMINGTON, NC 28403
OFFICE: (910)332-6560
Stewardship. Sustainability. Service.

DATE: 1/9/12
SCALE: N/A
DRAWN BY: CFPUA
CHECKED BY: CFPUA
PROJECT NO. :

SHEET NO: SSD-2

REV.NO.	DESCRIPTIONS	DATE
I	CITY OF WILMINGTON - EARLY GRADING RELEASE SUBMITTAL	7/21/16
H	PERMIT SUBMITTAL SET - COW, NHC	6/24/16
G	PERMIT SUBMITTAL SET - CFPUA, NCDOT, COW, NHC	5/6/16
F	ADDENDUM #1 - REVISIONS TO UTILITY PLAN	4/7/16
E	CITY OF WILMINGTON STORMWATER AND NHC SEDIMENT AND EROSION CONTROL SUBMITTAL	3/24/16
D	CITY OF WILMINGTON SRB SUBMITTAL	3/4/16
C	CITY OF WILMINGTON TRC SUBMITTAL	2/10/16
B	CITY OF WILMINGTON SRB SUBMITTAL	2/2/16
A	CITY OF WILMINGTON CONCEPT TRC SUBMITTAL	11/5/2015

REVISIONS

SEAL
PRELIMINARY PLAN NOT FOR CONSTRUCTION

SEAL
NORTH CAROLINA PROFESSIONAL SEAL 038675 ENGINEER TAMARA C. MURPHY
7/21/16

McKIM&CREED
243 North Front Street
Wilmington, NC 28401
Phone: (910)343-1048, Fax: (910)251-8282
NC LICENSE F-1222
www.mckimcreed.com

SHIPYARD VILLAGE WILMINGTON, LLC
PO BOX 29169
GREENSBORO, NC 27429-9169

SHIPYARD VILLAGE APARTMENTS
2821 CAROLINA BEACH ROAD
WILMINGTON, NORTH CAROLINA
TOWNSHIP OF WILMINGTON

UTILITY DETAILS

DATE:	21JUL16
MCE PROJ. #	07010-0001
DRAWN	TCM/TSM
DESIGNED	TCM/TSM
CHECKED	RMC
PROJ. MGR.	TSM

SCALE
HORIZONTAL: N/A
VERTICAL: N/A

M&C FILE NUMBER CU502
DRAWING NUMBER 26

STATUS: PRELIMINARY PLANS NOT FOR CONSTRUCTION
REVISION

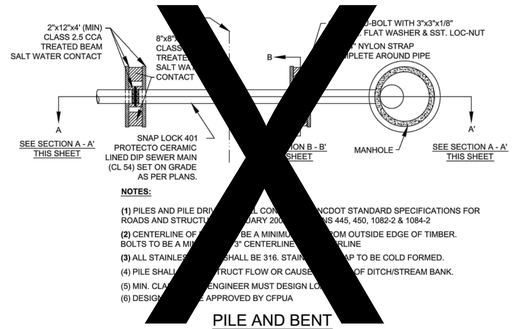

NOTES:

(1) PILES AND PILE DRI
(2) CENTERLINE OF
BOLTS TO BE A MI
(3) ALL STAINLES
(4) PILE SHAL
(5) MIN. CLA
(6) DESIG

PILE AND BENT

NOT TO SCALE

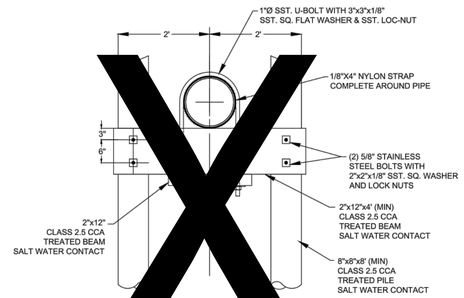

NOT TO SCALE

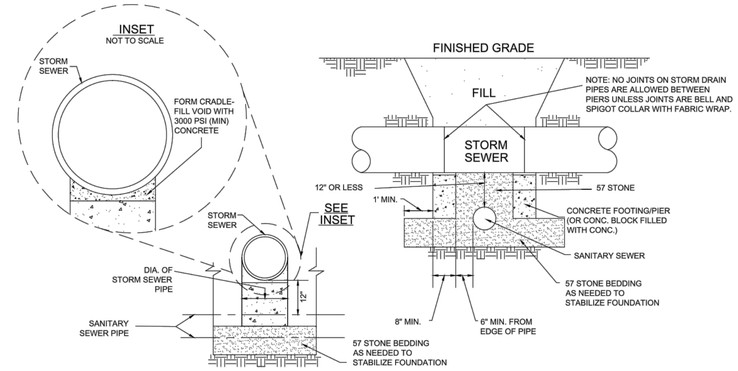

STRUCTURAL BRIDGING DETAIL FOR STORMWATER OVER GRAVITY SEWER INSTALLATIONS WITH LESS THAN 12" SEPARATION

NOT TO SCALE

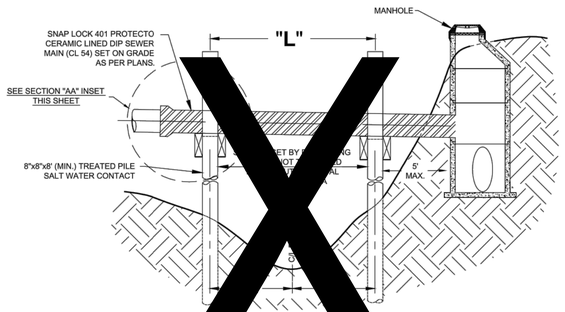

NOT TO SCALE

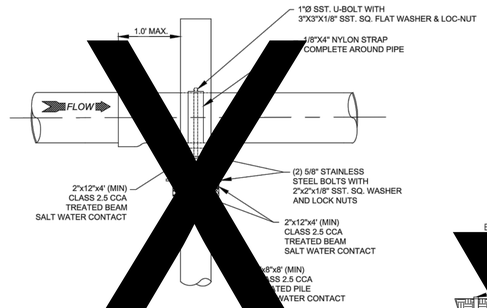

NOT TO SCALE

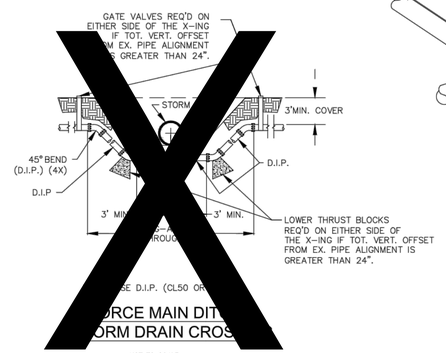

NOT TO SCALE

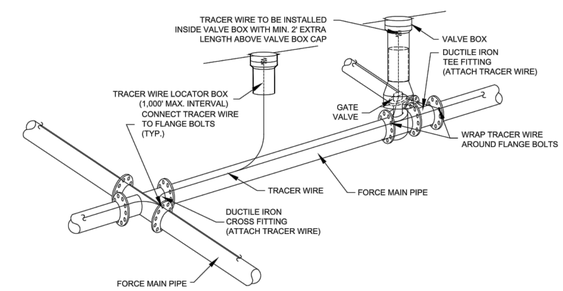

NOTES:
1. TRACER WIRE SHALL BE #10 COPPER SOLID CORE COPPER WIRE WITH GAS AND OIL RESISTANT INSULATION
2. WIRE SHALL BE STRAPPED TO ALL PVC FORCE MAIN PIPING WITH DUCT TAPE AT 12-FT. INTERVALS.
3. SECURE WIRE TO ALL TEE AND CROSS FITTINGS.
4. ALL WIRE SPLICES SHALL HAVE WATER PROOF WIRE CONNECTIONS.

TRACER WIRE DETAIL

NOT TO SCALE

GENERAL NOTES:

1. NO EXCAVATED MATERIAL SHALL BE PLACED IN ANY STREAM, DITCH OR DRAINAGE-WAY.
2. THE CONTRACTOR IS RESPONSIBLE FOR LOCATING ALL UNDERGROUND UTILITIES BEFORE ANY CONSTRUCTION BEGINS.
3. THE CONTRACTOR IS RESPONSIBLE FOR TEMPORARY SEDIMENT AND EROSION CONTROL MEASURES WHILE CONSTRUCTION IS IN PROGRESS.
4. THE CONTRACTOR IS RESPONSIBLE FOR STABILIZATION OF ALL DISTURBED AREAS.
5. THE CONTRACTOR IS RESPONSIBLE FOR LAY DOWN & STOCKPILE AREAS (TO ARRANGE AND INSURE COMPLIANCE WITH ALL LOCAL AND STATE REGULATIONS).

THE DETAILS SHOWN HEREON SUPERCEDE CFPUA WRITTEN TECHNICAL SPECIFICATIONS VERSIONS 1.00 - 1.04

REV:	DESCRIPTION:	DATE:

CFPUA SANITARY SEWER

STANDARD DETAILS

CAPE FEAR PUBLIC UTILITY AUTHORITY
235 GOVERNMENT CENTER DRIVE
WILMINGTON, NC 28403
OFFICE: (910)332-6560
Stewardship. Sustainability. Service.

DATE: 1/9/12
SCALE: N/A
DRAWN BY: CFPUA
CHECKED BY: CFPUA
PROJECT NO. :

SHEET NO: SSD-3

REV.NO.	DESCRIPTIONS	DATE
I	CITY OF WILMINGTON - EARLY GRADING RELEASE SUBMITTAL	7/21/16
H	PERMIT SUBMITTAL SET - COW, NHC	6/24/16
G	PERMIT SUBMITTAL SET - CFPUA, NCDOT, COW, NHC	5/6/16
F	ADDENDUM #1 - REVISIONS TO UTILITY PLAN	4/7/16
E	CITY OF WILMINGTON STORMWATER AND NHC SEDIMENT AND EROSION CONTROL SUBMITTAL	3/24/16
D	CITY OF WILMINGTON SRB SUBMITTAL	3/4/16
C	CITY OF WILMINGTON TRC SUBMITTAL	2/10/16
B	CITY OF WILMINGTON SRB SUBMITTAL	2/2/16
A	CITY OF WILMINGTON CONCEPT TRC SUBMITTAL	11/5/2015

REVISIONS

SEAL
PRELIMINARY PLAN
NOT FOR
CONSTRUCTION

SEAL
NORTH CAROLINA PROFESSIONAL SEAL 038675 ENGINEER TAMARA C. MURPHY
7/21/16

McKIM&CREED
243 North Front Street
Wilmington, NC 28401
Phone: (910)343-1048, Fax: (910)251-8282
NC LICENSE F-1222
www.mckimcreed.com

SHIPYARD VILLAGE WILMINGTON, LLC
PO BOX 29169
GREENSBORO, NC 27429-9169

SHIPYARD VILLAGE APARTMENTS
2821 CAROLINA BEACH ROAD
WILMINGTON, NORTH CAROLINA
TOWNSHIP OF WILMINGTON

UTILITY DETAILS

DATE:	21JUL16
MCE PROJ. #	07010-0001
DRAWN	TCM/TSM
DESIGNED	TCM/TSM
CHECKED	RMC
PROJ. MGR.	TSM

SCALE
HORIZONTAL: N/A
VERTICAL: N/A

M&C FILE NUMBER: CU503
DRAWING NUMBER: 27

STATUS: PRELIMINARY PLANS
NOT FOR CONSTRUCTION
REVISION

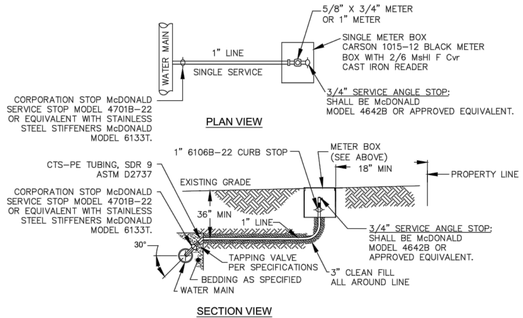

NOTES:
1. NO JOINT SHALL BE INSTALLED BETWEEN THE MAIN SERVICE TAP AND THE METER STOP. ALL SERVICES SHALL BE INSTALLED PERPENDICULAR TO MAIN.
2. SERVICE SADDLES ON PVC MAINS SHALL BE WIDE BAND BRASS BODY: SADDLE McDONALD 3801 OR EQUIVALENT
3. METER BOXES SUSCEPTIBLE TO TRAFFIC SHALL CONFORM TO ASTM A48, CLASS 30B AND AASHTO H20 LOAD RATING STANDARDS (SIP MODEL 4240 OR APPROVED EQUIVALENT)

SINGLE SERVICE CONNECTION

TYPICAL WATER SERVICE CONNECTION FOR RESIDENTIAL SINGLE FAMILY HOME ON CFPUA WATER SYSTEM

NOT TO SCALE

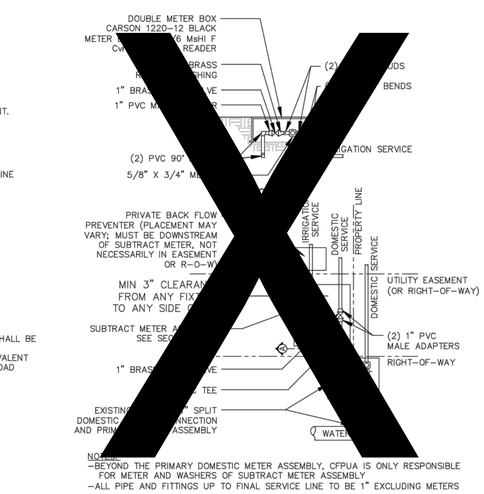

DOUBLE SERVICE CONNECTION USING SUBTRACT METER

(MULTIPLE DOMESTIC SERVICES PER TAP)

NOT TO SCALE

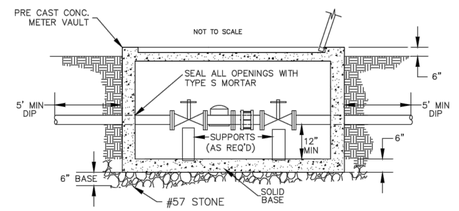

METER VAULT SECTION A-A

NOT TO SCALE

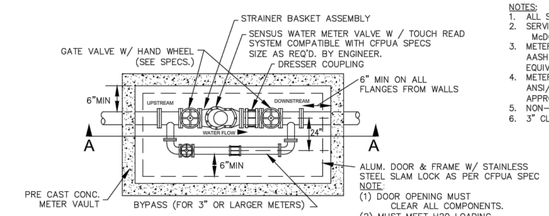

NOTE:
(1) DOOR OPENING MUST CLEAR ALL COMPONENTS.
(2) MUST MEET H20 LOADING REQ. IF IN TRAFFIC AREA.

WATER METER VAULT

FOR WATER METERS LARGER THAN 2"

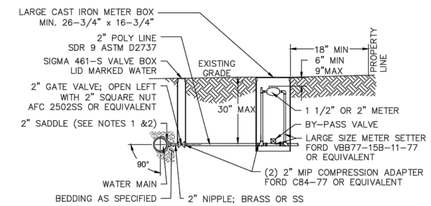

NOTES:
1. ALL SERVICES SHALL BE INSTALLED PERPENDICULAR TO MAIN.
2. SERVICE SADDLES ON PVC MAINS SHALL BE WIDE BAND BRASS BODY: McDONALD 3800, FORD S90 (DOUBLE STRAP) OR EQUIVALENT.
3. METER BOXES SUSCEPTIBLE TO TRAFFIC SHALL CONFORM TO ASTM A48, CLASS 30B AND AASHTO H20 LOAD RATING STANDARDS (OLDCASTLE PRECAST MODEL B1730 OR APPROVED EQUIVALENT).
4. METER BOXES SUSCEPTIBLE TO INCIDENTAL, NON-DELIBERATE TRAFFIC SHALL CONFORM TO ANSI/SCTE 77 TIER 15 LOAD RATING STANDARDS (SYNERTECH MODEL DUO 17x30 OR APPROVED EQUIVALENT).
5. NON-TRAFFIC METER BOXES SHALL BE SIGMA MB2203 OR APPROVED EQUIVALENT.
6. 3" CLEAN FILL REQUIRED ALL AROUND 2" POLY SERVICE LINE.

LARGE METER

FOR 1 1/2" OR 2" WATER SERVICES

NOT TO SCALE

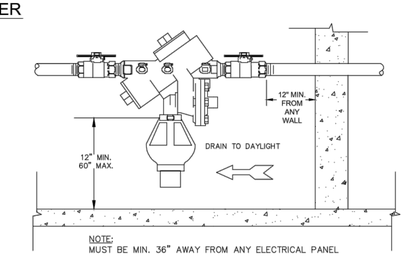

NOTE:
MUST BE MIN. 36" AWAY FROM ANY ELECTRICAL PANEL

INDOOR HORIZONTAL INSTALLATION

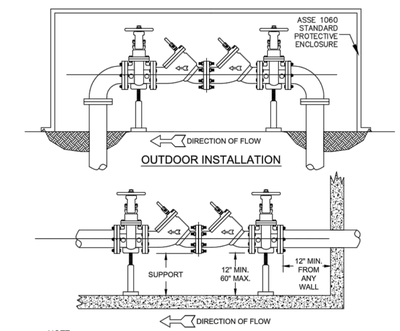

NOTE:
1. MUST BE MIN. 36" AWAY FROM ANY ELECTRICAL PANEL
2. VALVE REQ'D DOWNSTREAM OF BACKFLOW ASSEMBLY
3. VERTICAL INSTALLATION SHALL BE DESIGNED AND SUBMITTED TO CFPUA ESMD FOR APPROVAL

INDOOR INSTALLATION

DOUBLE CHECK VALVE ASSEMBLY

NOT TO SCALE

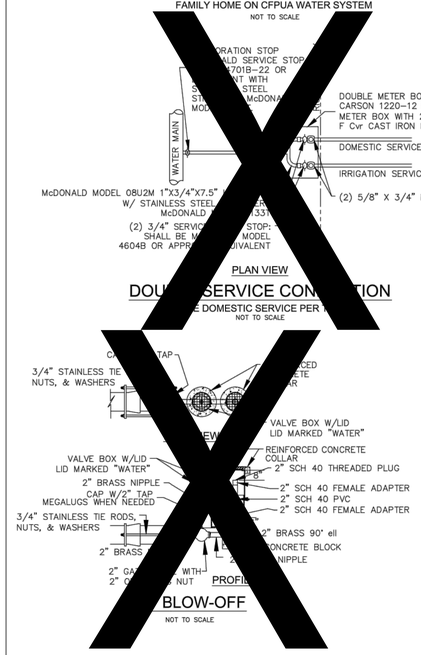

BLOW-OFF

NOT TO SCALE

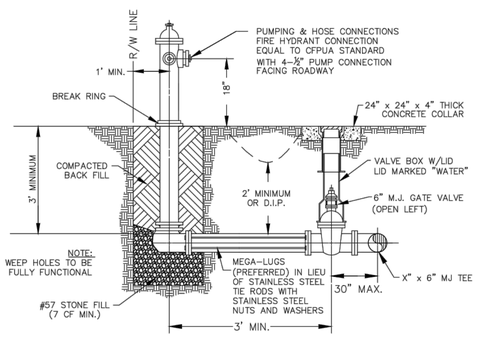

FIRE HYDRANT ASSEMBLY

NOT TO SCALE

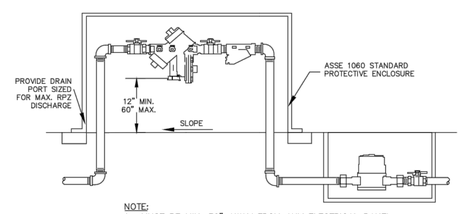

NOTE:
1. MUST BE MIN. 36" AWAY FROM ANY ELECTRICAL PANEL
2. VALVE REQ'D DOWNSTREAM OF BACKFLOW ASSEMBLY
3. VERTICAL INSTALLATION SHALL BE DESIGNED AND SUBMITTED TO CFPUA ESMD FOR APPROVAL

OUTDOOR HORIZONTAL INSTALLATION

REDUCED PRESSURE PRINCIPLE ASSEMBLY

NOT TO SCALE

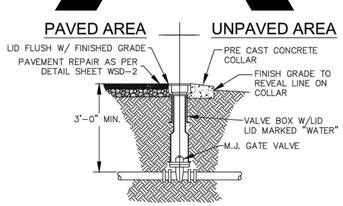

VALVE DETAIL

NOT TO SCALE

GENERAL NOTES:

1. NO EXCAVATED MATERIAL SHALL BE PLACED IN ANY STREAM, DITCH OR DRAINAGE-WAY.
2. THE CONTRACTOR IS RESPONSIBLE FOR LOCATING ALL UNDERGROUND UTILITIES BEFORE ANY CONSTRUCTION BEGINS.
3. THE CONTRACTOR IS RESPONSIBLE FOR TEMPORARY SEDIMENT AND EROSION CONTROL MEASURES WHILE CONSTRUCTION IS IN PROGRESS.
4. THE CONTRACTOR IS RESPONSIBLE FOR STABILIZATION OF ALL DISTURBED AREAS.
5. THE CONTRACTOR IS RESPONSIBLE FOR LAY DOWN & STOCKPILE AREAS (TO ARRANGE AND ENSURE COMPLIANCE WITH ALL LOCAL AND STATE REGULATIONS).

THE DETAILS SHOWN HEREON SUPERCEDE CFPUA WRITTEN TECHNICAL SPECIFICATIONS VERSIONS 1.00 - 1.04

REV:	DESCRIPTION:	DATE:
1	Single Service Connection, Double Service Connection, and Large Meter Revised	10/26/12

CFPUA WATER DISTRIBUTION SYSTEM

STANDARD DETAILS

CAPE FEAR PUBLIC UTILITY AUTHORITY
235 GOVERNMENT CENTER DRIVE
WILMINGTON, NC 28403
OFFICE: (910)332-6560
Stewardship. Sustainability. Service.

DATE: 1/9/12
SCALE: N/A
DRAWN BY: CFPUA
CHECKED BY: CFPUA
PROJECT NO. :

SHEET NO: WSD-1

REV.NO.	DESCRIPTIONS	DATE
I	CITY OF WILMINGTON - EARLY GRADING RELEASE SUBMITTAL	7/21/16
H	PERMIT SUBMITTAL SET - COW, NHC	6/24/16
G	PERMIT SUBMITTAL SET - CFPUA, NCDOT, COW, NHC	5/6/16
F	ADDENDUM #1 - REVISIONS TO UTILITY PLAN	4/7/16
E	CITY OF WILMINGTON STORMWATER AND NHC SEDIMENT AND EROSION CONTROL SUBMITTAL	3/24/16
D	CITY OF WILMINGTON SRB SUBMITTAL	3/4/16
C	CITY OF WILMINGTON TRC SUBMITTAL	2/19/16
B	CITY OF WILMINGTON SRB SUBMITTAL	2/2/16
A	CITY OF WILMINGTON CONCEPT TRC SUBMITTAL	11/5/2015

REVISIONS

SEAL
PRELIMINARY PLAN NOT FOR CONSTRUCTION

SEAL
NORTH CAROLINA PROFESSIONAL SEAL 038675 ENGINEER TAMARA C. MURPHY
7/21/16

McKIM&CREED
243 North Front Street
Wilmington, NC 28401
Phone: (910)343-1048, Fax: (910)251-8282
NC LICENSE F-1222
www.mckimcreed.com

SHIPYARD VILLAGE WILMINGTON, LLC
PO BOX 29169
GREENSBORO, NC 27429-9169

SHIPYARD VILLAGE APARTMENTS
2821 CAROLINA BEACH ROAD
WILMINGTON, NORTH CAROLINA
TOWNSHIP OF WILMINGTON

UTILITY DETAILS

DATE:	21JUL16
MCE PROJ. #	07010-0001
DRAWN	TCM/TSM
DESIGNED	TCM/TSM
CHECKED	RMC
PROJ. MGR.	TSM

SCALE
HORIZONTAL: N/A
VERTICAL: N/A

M&C FILE NUMBER: CU504
DRAWING NUMBER: 28

STATUS: PRELIMINARY PLANS NOT FOR CONSTRUCTION
REVISION

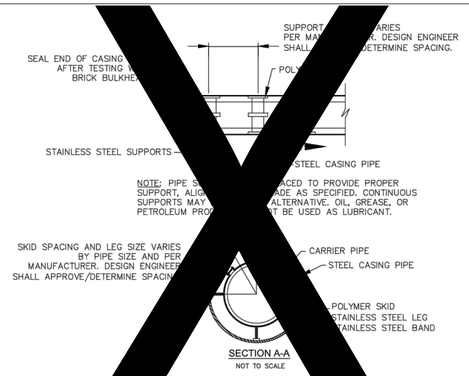

PIPE CASING SUPPO AIL

NOT TO SCALE

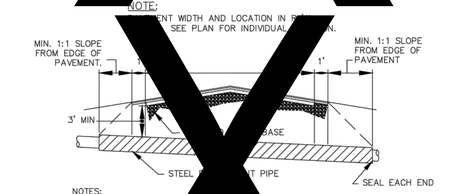

NOTES:
1. CASING WILL BE INST D GRADE SHOWN ON INDIVIDUAL PROFILE FOR EACH CROSSIN O LINE AND GRADE IS REQUIRED.
2. TRACER WIRE SHA NTIN GH CASING

TYP BORIN CKING DETAIL

NOT TO

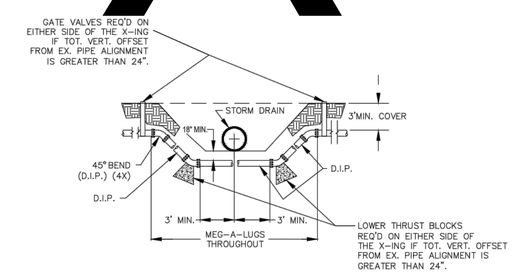

NOTE: USE D.I.P. (CL50 OR BETTER)

WATER MAIN DITCH & STORM DRAIN CROSSING

NOT TO SCALE

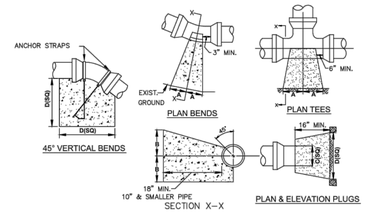

SIZE	90° BENDS		45° BENDS		22 1/2° BENDS		TEES/PLUGS		45° VERT. BENDS
	A	B	A	B	A	B	A	B	
3"	8"	6"	5"	6"	3"	7"	6"	8"	27"
4"	8"	9"	5"	8"	3"	11"	6"	9"	28"
6"	14"	11"	9"	9"	8"	8"	12"	9"	36"
8"	16"	16"	12"	12"	10"	13"	14"	13"	42"
10"	18"	22"	15"	14"	14"	16"	18"	15"	50"
12"	20"	28"	18"	17"	16"	16"	22"	18"	62"
14"	26"	29"	21"	19"	18"	18"	26"	20"	72"
16"	33"	29"	25"	21"	20"	21"	32"	21"	83"
18"	40"	30"	28"	24"	22"	23"	36"	24"	88"

NOTES: 1. BASED ON 160 PSI TEST PRESSURE AND 2000 PSF SOIL BEARING CAPACITY.
2. ALL BEARING SURFACES TO BE CARRIED TO UNDISTURBED GROUND.
3. USE MEG-A-LUG (PREFERRED) IN LIEU OF BLOCKING AND RODDING.

THRUST BLOCK DETAIL

NOT TO SCALE

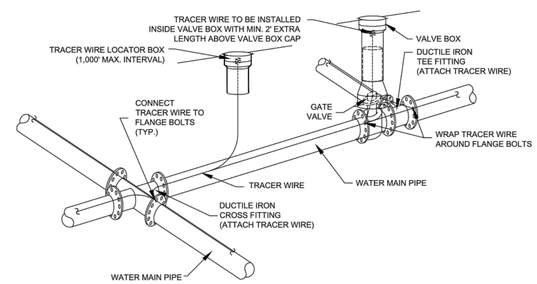

NOTES:
1. TRACER WIRE SHALL BE #10 COPPER SOLID CORE COPPER WIRE WITH GAS AND OIL RESISTANT INSULATION
2. WIRE SHALL BE STRAPPED TO ALL PVC WATER MAIN PIPING WITH DUCT TAPE AT 12-FT. INTERVALS.
3. SECURE WIRE TO ALL TEE AND CROSS FITTINGS.
4. ALL WIRE SPLICES SHALL HAVE WATER PROOF WIRE CONNECTIONS.

TRACER WIRE DETAIL

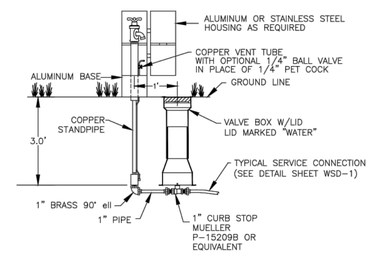

SAMPLING STATION

NOT TO SCALE

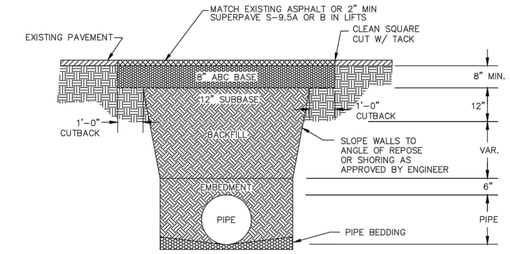

NOTES:
1. BACKFILL SHALL BE SUITABLE MATERIAL THAT IS FREE FROM HEAVY CLAY, GUMBOS, DEBRIS, ORGANICS AND LITTLE TO NO EXCESSIVE MOISTURE.
2. SELECT BACKFILL MAY BE SUBSTITUTED OR REQUIRED BY CITY TO ACHIEVE COMPACTION, (I.E. #57, ABC, CRUSHED LIMESTONE, CLEAN SAND, FLOWABLE FILL, ETC).
3. 8-INCH OF ABC BASE MATERIAL SHALL BE USED ON CITY STREETS.
4. BACKFILL AND BASE MATERIALS SHALL BE COMPACTED 12" MINIMUM LIFTS
5. SOIL SHALL BE COMPACTED BY A MECHANIZED TAMPER (I.E JUMPING JACK), HOWEVER, VIBRATORY ROLLERS > 18" WIDTH MAY BE USED FOR LARGER EXCAVATIONS. THE PLATE TAMP METHOD SHALL NOT BE USED.
6. ALL APPROVED CASTINGS SHALL BE SET FLUSH TO GRADE AND SUPPORTED IF APPLICABLE.
7. ABC BASE AND SUBBASE COMPACTED TO 98% AND BACKFILL AND EMBEDMENT COMPACTED TO 90% AS DETERMINED BY THE MODIFIED PROCTOR AASHTO METHOD T-99.
8. 1-FOOT CUTBACKS OF ASPHALT SHALL BE PREPARED ON UNDISTURBED SOIL. MINIMUM ASPHALT DENSITY IS 90%.

PAVEMENT REPAIR WHERE PIPE INSTALLED

(FOR PRIVATE ROADS AND PAVED AREAS;
CONTRACTOR TO MEET MIN. REQUIREMENTS AS DEFINED BY
RIGHT-OF-WAY OWNER FOR PUBLIC ROAD REPAIRS)

NOT TO SCALE

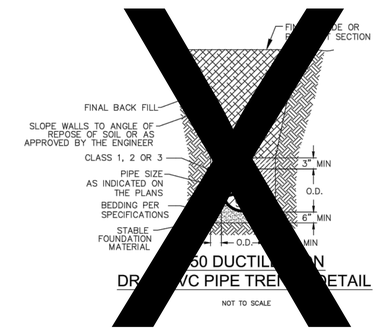

50 DUCTIL N
DR VC PIPE TRE DETAIL

NOT TO SCALE

GENERAL NOTES:

1. NO EXCAVATED MATERIAL SHALL BE PLACED IN ANY STREAM, DITCH OR DRAINAGE-WAY.
2. THE CONTRACTOR IS RESPONSIBLE FOR LOCATING ALL UNDERGROUND UTILITIES BEFORE ANY CONSTRUCTION BEGINS.
3. THE CONTRACTOR IS RESPONSIBLE FOR TEMPORARY SEDIMENT AND EROSION CONTROL MEASURES WHILE CONSTRUCTION IS IN PROGRESS.
4. THE CONTRACTOR IS RESPONSIBLE FOR STABILIZATION OF ALL DISTURBED AREAS.
5. THE CONTRACTOR IS RESPONSIBLE FOR LAY DOWN & STOCKPILE AREAS (TO ARRANGE AND ENSURE COMPLIANCE WITH ALL LOCAL AND STATE REGULATIONS).

THE DETAILS SHOWN HEREON SUPERCEDE CFPUA WRITTEN TECHNICAL SPECIFICATIONS VERSIONS 1.00 - 1.04

REV:	DESCRIPTION:	DATE:

CFPUA WATER DISTRIBUTION SYSTEM

STANDARD DETAILS

CAPE FEAR PUBLIC UTILITY AUTHORITY
235 GOVERNMENT CENTER DRIVE
WILMINGTON, NC 28403
OFFICE: (910)332-6560
Stewardship. Sustainability. Service.

DATE: 1/9/12
SCALE: N/A
DRAWN BY: CFPUA
CHECKED BY: CFPUA
PROJECT NO.:

SHEET NO: WSD-2

REV.NO.	DESCRIPTIONS	DATE
I	CITY OF WILMINGTON - EARLY GRADING RELEASE SUBMITTAL	7/21/16
H	PERMIT SUBMITTAL SET - COW, NHC	6/24/16
G	PERMIT SUBMITTAL SET - CFPUA, NCDOT, COW, NHC	5/6/16
F	ADDENDUM #1 - REVISIONS TO UTILITY PLAN	4/7/16
E	CITY OF WILMINGTON STORMWATER AND NHC SEDIMENT AND EROSION CONTROL SUBMITTAL	3/24/16
D	CITY OF WILMINGTON SRB SUBMITTAL	3/4/16
C	CITY OF WILMINGTON TRC SUBMITTAL	2/10/16
B	CITY OF WILMINGTON SRB SUBMITTAL	2/2/16
A	CITY OF WILMINGTON CONCEPT TRC SUBMITTAL	11/5/2015

REVISIONS

SEAL
PRELIMINARY PLAN NOT FOR CONSTRUCTION

SEAL
NORTH CAROLINA PROFESSIONAL SEAL 038675 ENGINEER TAMARA C. MURPHY
7/21/16

McKIM&CREED
243 North Front Street
Wilmington, NC 28401
Phone: (910)343-1048, Fax: (910)251-8282
NC LICENSE F-1222
www.mckimcreed.com

SHIPYARD VILLAGE WILMINGTON, LLC
PO BOX 29169
GREENSBORO, NC 27429-9169

SHIPYARD VILLAGE APARTMENTS
2821 CAROLINA BEACH ROAD
WILMINGTON, NORTH CAROLINA
TOWNSHIP OF WILMINGTON

UTILITY DETAILS

DATE:	21JUL16
MCE PROJ. #	07010-0001
DRAWN	TCM/TSM
DESIGNED	TCM/TSM
CHECKED	RMC
PROJ. MGR.	TSM

SCALE
HORIZONTAL: N/A
VERTICAL: N/A

M&C FILE NUMBER: CU505
DRAWING NUMBER: 29

STATUS: PRELIMINARY PLANS NOT FOR CONSTRUCTION
REVISION